electronics

CLEVELAND INSTITUTE OF ELECTRONICS / CLEVELAND, OHIO

Series and Parallel D-C Circuits

2323-1

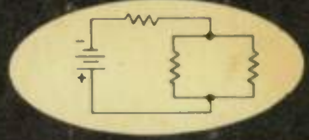

An **AUTO-PROGRAMMED** Lesson

ABOUT THE AUTHOR

Through nearly 20 years experience in helping students learn through home study, Mr. Geiger has obtained an intimate understanding of the problems facing home-study students. He has used this knowledge to make many improvements in our teaching methods. Mr. Geiger believes that students learn fastest when they actively participate in the lesson, rather than just reading it.

Mr. Geiger edits much of our new lesson material, polishing up the manuscripts we receive from subject-matter experts so that they are easily readable, contain only training useful to the student in practical work, and are written so as to teach, rather than merely presenting information.

Mr. Geiger's book, *Successful Preparation for FCC License Examinations* (published by Prentice-Hall), was chosen by the American Institute of Graphic Arts as one of the outstanding textbooks of the year.

This is an AUTO-PROGRAMMED Lesson exclusive with the Cleveland Institute of Electronics. It is your assurance of the finest in technical education and training.

**Registered Trademark*

Accredited by the Accrediting Commission
of the National Home Study Council

The Accrediting Commission has been approved by the U S Office of Education as a "nationally recognized accrediting agency".

CLEVELAND INSTITUTE OF ELECTRONICS

Series and Parallel D-C Circuits

By DARRELL L. GEIGER
Senior Project Director
Cleveland Institute of Electronics

2323-1

In this lesson you will learn...

Frontispiece: *Automatic inspection of deposited carbon resistors. Defective units are automatically rejected.* Photo: Courtesy: Western Electric Co.

FIRST EDITION/Second Revised Printing/November, 1967.

2323-1

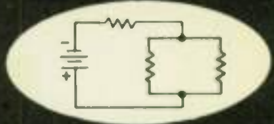

A chat with your instructor

There are two basic types of d-c circuits: series and parallel. This lesson is devoted to understanding and working with the currents, voltages, and resistances associated with these two circuit types. Although the lesson is about d-c circuits, the principles, with some modifications, also apply to a-c circuits, which you will study later.

The principles taught in this lesson are basic to the operation of practically all electronic equipment. The better you understand these principles, the easier and the faster you will go through your training program and the more you will learn. So be sure to write for help (by using one of the Request for Assistance sheets provided) on any points in the lesson that you cannot understand.

Never forget that your success depends upon regular study. One or two hours a day, five days a week will bring excellent results. If you have not yet set aside a definite time each day for study, now is the time to do so.

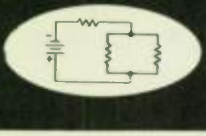

Series and Parallel D-C Circuits

CURRENTS IN PARALLEL CIRCUITS

Components in a circuit are hooked to each other, and to the power source, in two basic arrangements: *series* and *parallel*. In the series arrangement there is only one current but there are several voltages. In the parallel arrangement there is only one voltage but there are several current values, and laws that determine these current values are the subject of this part of the lesson.

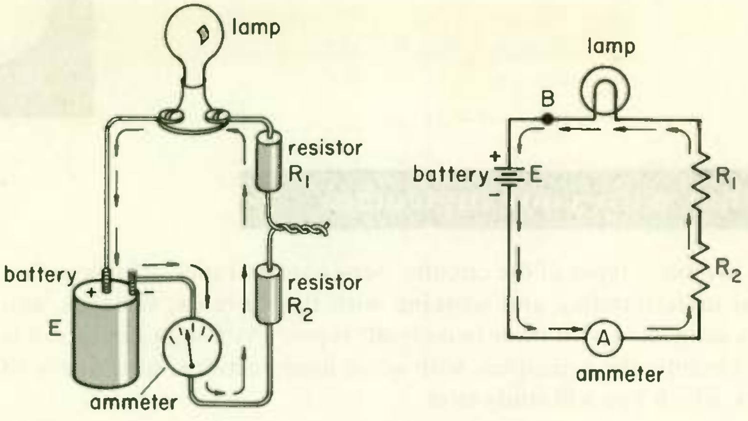

(a) Pictorial diagram (b) Schematic diagram

Fig. 1 In a series circuit current flowing from the negative terminal of the battery must pass through every element of the circuit before returning to the positive terminal. Arrows show direction of electron flow.

1 SERIES AND PARALLEL CIRCUITS . . . In a *series circuit*, such as shown in Fig. 1, there is only one path for the current to follow. Battery voltage E pushes electrons from the negative terminal of the battery through the ammeter, resistor R_2, resistor R_1, and the lamp and finally back to the positive terminal of the battery. It is a series circuit because every electron moving around the circuit must pass through *every component*.

Since all the electrons that form the current must pass through every component, *the amount of current flowing through each element of a series circuit is the same*. In Fig. 1, for example, if the current through resistor R_2 is 300 mA (milliamperes), then the current through R_1, the lamp, the ammeter, and the battery itself must also be 300 mA.

We can tell the current strength in Fig. 1 by reading the ammeter. All the current flowing around the circuit must pass through the ammeter, and this current swings the meter pointer along the scale. The stronger the current the farther the pointer swings. Ammeters for measuring low current strengths (less than one ampere) are often called *milliammeters*, but in this lesson we call them ammeters.

In a *parallel circuit*, such as shown in Fig. 2, there are several paths, or parallel branches, that current may follow. The battery voltage E pushes electrons from the negative terminal of the battery through ammeter A to point B. At point B the electrons divide. Some take the path through the lamp, some go by way of resistor R_1, and the rest go through R_2. All the

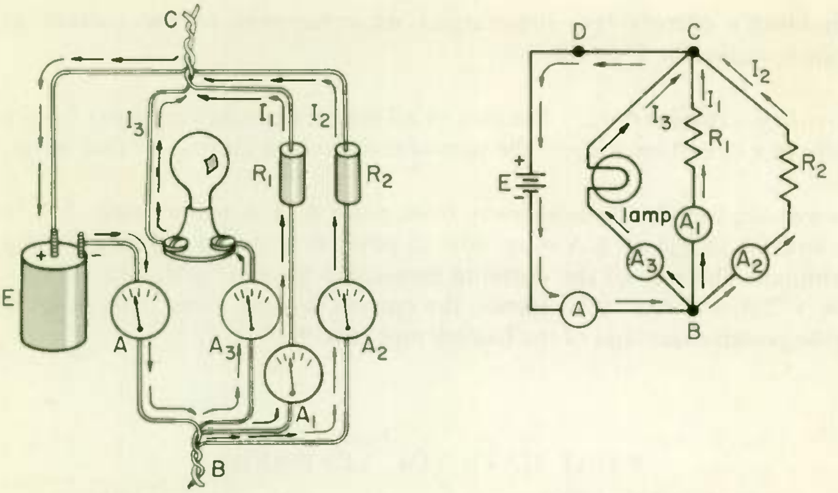

(a) Pictorial diagram (b) Schematic diagram

Fig. 2 **A parallel circuit. Current flowing from the negative terminal of the battery to the positive terminal divides into three parts. One part, I_1, flows through R_1; another part, I_2, flows through R_2; and the third part, I_3, flows through the lamp.**

electrons meet again at point *C* and from there return to the positive terminal of the battery. This is a parallel circuit because an electron in going once around the circuit must pass through the lamp, *or* resistor R_1, *or* resistor R_2, but it can't go through more than one of these components on a single trip around the circuit. Contrast this to Fig. 1, in which an electron, to get around the circuit, must pass through all three components.

Ammeter *A* in Fig. 2 measures the current going from the negative terminal of the battery to point *B*. Ammeter A_1 reads the amount of current passing through R_1; ammeter A_2 reads the amount of current passing through R_2; and ammeter A_3 reads the amount of current passing through the lamp. Since the electrons upon reaching point *B* divide and go three different ways, the reading of any one of the ammeters A_1, A_2, or A_3 must be less than the reading of ammeter *A*. In other words, the current in any branch of a parallel circuit must be less than the total current supplied by the battery or other power source.

Since all the electrons upon reaching point *B* must also leave *B* by one or another of the three paths, the sum of the three branch currents must equal the current supplied by the battery. Thus if the lamp draws 1 A (ampere), resistor R_1 draws 2 A, and resistor R_2 draws 3 A, then the current *I* flowing from the battery is equal to 1 A + 2 A + 3 A = 6 A.

4 Kirchhoff's current law summarizes what happens to the current at branch points in a circuit.

Kirchhoff's current law . . . The sum of all the currents flowing away from a point in a circuit must equal the sum of the currents flowing to that point.

As we have found, 6 A flows away from point B (1 A to the lamp, 2 A to R_1 and 3 A to R_2), so 6 A must flow to point B from the negative battery terminal. The sum of the currents flowing to point C is $I_3 + I_1 + I_2 = 1\text{ A} + 2\text{ A} + 3\text{ A} = 6\text{ A}$. Hence, the current flowing away from point C to the positive terminal of the battery must also be 6 A.

WHAT HAVE YOU LEARNED?

1. If the current at any point in a [✓ *(series)*]*(parallel)* circuit is 7 A, then the current in any other part of the circuit is also 7 A.

2. If the ammeter in Fig. 1 reads 450 mA, then the current through the lamp is *(more than)(less than)*[✓ *(equal to)*] 450 mA.

3. If in Fig. 1(b) we remove the ammeter from the position shown and insert it in the circuit at point B, will it read the same current value as before? YES

4. If the current through the lamp in Fig. 2 is 750 mA, then the current flowing through ammeter A_3 [✓ *(is)*]*(is not)* equal to 750 mA.

5. If in Fig. 2 ammeter A_1 reads 200 mA, ammeter A_2 reads 400 mA, and ammeter A_3 reads 700 mA, then ammeter A must read 1300 milliamperes or 1.3 amperes.

6. Find the current flowing through the lamp in Fig. 2 if ammeter A_1 reads 300 mA, ammeter A_2 reads 150 mA, and ammeter A reads 700 mA.
250 mA

7. Refer to Problem 6. If ammeter A_3 is removed from where it is shown and inserted in the circuit at point D, what will it read?
700 mA

8. The tubes in a radio or TV receiver sometimes have their heaters connected in series and sometimes in parallel. The tube heaters in Fig. 3(a) are connected in (a) SERIES. Each heater requires a current of 200 mA. Therefore a current of (b) 200 mA will be drawn from the voltage source that supplies the heater current.

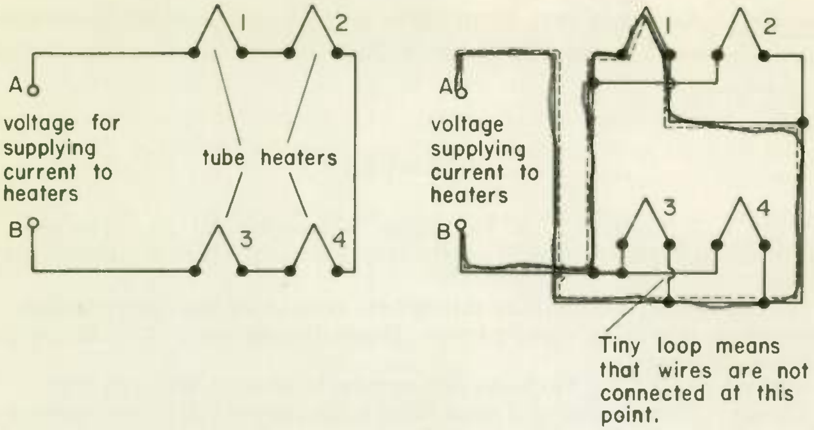

(a) (b)

Fig. 3

9. To see how the heaters in Fig. 3(b) are connected, start at voltage-source terminal *A* and with your pencil point try to trace along a path that will take you through heater 1 and back to voltage-source terminal *B*. The dashed line shows the path that you will have to take. Notice that you did not trace through any of the other heaters. Now trace from *A* through heater 2 back to *B* in a similar manner. Do the same thing with heaters 3 and 4. If in every case you are able to go from *A* through the heater being considered and back to *B* without passing through any other heater, then the heaters are connected in *(series)*[✓ *(parallel)*].

10. If in Fig. 3(a) you trace from *A* through heater 1 and back to *B*, you (a)[✓ *(need)*] *(need not)* also pass through heaters 2, 3, and 4. This verifies that the heaters of Fig. 3(a) are connected in (b) SERIES.

11. Each heater in Fig. 3(b) requires a current of 200 mA. How much current will be drawn from the voltage source that supplies the heater current? 800mA

12. The household appliances of Fig. 4 are connected in (a)*(series)*

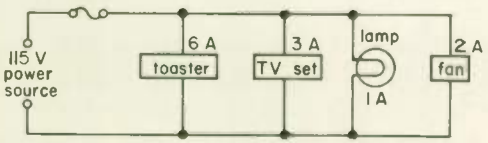

Fig. 4

(parallel). Assuming that all of them may be in use at the same time, would you use a 10-A, a 15-A, or a 20-A fuse to protect this circuit?
(b) 15A.

ANSWERS

1. Series 2. Equal to 3. Yes. . .Since the current is the same in all parts of a series circuit, the ammeter will read the same no matter where it is placed in the circuit.
4. Is. . .All the electrons passing through the lamp must also pass through A_3 (ammeter A_3 is in series with the lamp). Hence, the reading of A_3 is the current drawn by the lamp.
5. 1300 mA or 1.3 A . . . To change milliamperes to amperes, divide by 1000.
6. 250 mA . . . Since ammeter A reads 700 mA, the current flowing into point B is 700 mA. By Kirchhoff's current law, the sum of the currents leaving point B must also be 700 mA. 300 mA + 150 mA = 450 mA leaves by way of R_1 and R_2. This means that 700 mA − 450 mA = 250 mA must leave by the path through the lamp. CHECK: 300 mA + 150 mA + 250 mA = 700 mA, which is the current coming into point B as read on ammeter A.
7. 700 mA . . . The ammeter will read the current leaving point C going to the positive terminal of the battery. The current entering point C is $I_1 + I_2 + I_3$ = 300 mA + 150 mA + 250 mA = 700 mA. Hence, the current leaving point C is 700 mA.
8. (a) Series (b) 200 mA . . . Since the current is the same in all parts of a series circuit, the current drawn from the voltage source must be the same as the current through any one of the heaters.
9. Parallel 10. (a) Need; (b) series 11. 800 mA . . . In a parallel circuit the total current is the sum of the currents taken by the components connected in parallel.
12. (a) Parallel (b) 15 A . . . You should use a fuse rated a little higher than the maximum current through the fuse. The fuse current will be 6 A + 3 A + 1 A + 2 A = 12 A. Hence, a 15-A fuse should be satisfactory.

2 FINDING THE CURRENTS IN A PARALLEL CIRCUIT . . . The parallel circuit of Fig. 2 is redrawn in Fig. 5 with the resistance and voltage values shown and with a couple of switches added. Let us find the readings of the ammeters both with the switches open and with one or both switches closed.

When switches S_1 and S_2 are open, R_1 and R_2 are disconnected from the battery, so that the circuit is reduced to a lamp connected across the battery. By Ohm's law the lamp current is

$$I_3, \text{ in amperes (A)} = \frac{E, \text{ in volts (V)}}{R_3, \text{ in ohms } (\Omega)} = \frac{40\text{ V}}{20\,\Omega} = 2\text{ A}$$

Thus A_3 reads 2 A when both switches are open. If we close switch S_1, we do not change the fact that the lamp is connected directly across the 40-V electrical "pressure" put out by the battery. With or without switch S_1 closed, the 40 V of the battery is pushing electrons against the 20 Ω of opposition of the lamp resistance. Hence, by Ohm's law the current through the lamp is 2 A no matter whether S_1 is open or closed. And if both S_1 and S_2 are closed, the current will continue to be 2 A. As long as the battery voltage stays constant at 40 V, opening or closing one or both switches will not change the reading of ammeter A_3.

When S_1 is closed, R_1 is connected directly to the two battery terminals. The current is found by Ohm's law, and its value stays the same whether or not the lamp or R_2 is also connected to the battery.

$$I_1 = \frac{E}{R_1} = \frac{40\text{ V}}{10\ \Omega} = 4\text{ A}$$

Similarly, the reading of ammeter A_2 is

$$I_2 = \frac{E}{R_2} = \frac{40}{8} = 5\text{ A}$$

We find the reading of ammeter A, which is the total current furnished by the battery, by using Kirchhoff's current law. The current entering point B from the battery must equal the sum of the currents leaving point B and going through the three parallel branches. $I = I_3 + I_1 + I_2 = 2\text{ A} + 4\text{ A} + 5\text{ A} = 11\text{ A}$. Thus ammeter A reads 11 A when both switches are closed.

To summarize our findings in this topic, each of the components in a parallel circuit is connected directly across the battery or other power source. Since the current through any one of the components does not pass through any of the others, the current taken by that component is completely independent of the other components in parallel. As long as the battery voltage does not change, the current through that component will not change even though you add more parallel components, change their value, or take away some. That component is connected directly across the battery, and so its current is always given by $I = \frac{E}{R}$, where R is the resistance of that component. The total current supplied by the battery is the sum of the currents drawn by the components in parallel.

The voltage is always the same across every component in parallel. When all switches in Fig. 5 are closed, each one of the three components is connected directly across the battery, and therefore the voltage across each one must be 40 V.

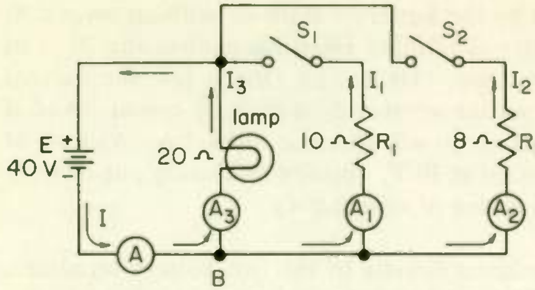

Fig. 5 **The current through any branch of a parallel circuit across a constant voltage does not change when additional parallel branches are added or removed.**

WHAT HAVE YOU LEARNED?

1. In Fig. 6 a light, a power saw, and a TV set are operating from the 110-V house wiring. The three devices are connected in (a) *(series)* [✓ *(parallel)*]. Turning on or off any one of the devices (b) *(does)* [✓ *(does not)*] affect the operation of the other two devices. This is proof that the current drawn by a device is unaffected by other devices connected in (c) *(series)* [✓ *(parallel)*] with it. Hence, to find the current taken by a component or device connected across a constant-voltage source, such as a battery or the 110-V main, you (d) *(must consider)* [✓ *(need not consider)*] the current taken by other components or devices in parallel.

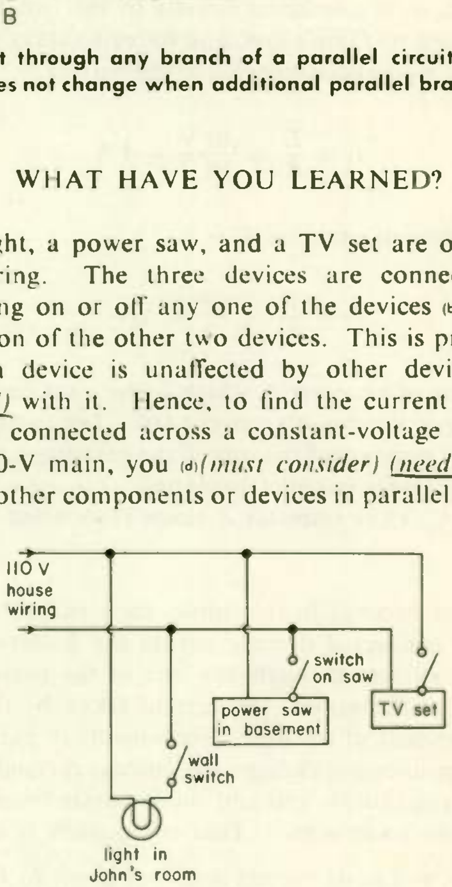

Fig. 6

2. If the TV set in Fig. 6 has an equivalent resistance of 55 Ω, then the set draws a current of (a) 2 amperes. If the power saw has an equivalent resistance of 20 Ω, it draws (b) 5.5 amperes from the 110-V supply. If the lamp filament has a resistance of 110 Ω, it draws (c) 1 ampere(s) from the line. The total current drawn from the house line in Fig. 6 when all three devices are in use is therefore (d) 8.5 amperes.

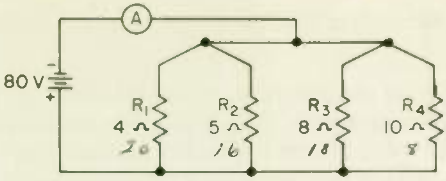

Fig. 7

3. The ammeter in Fig. 7 reads 54 amperes.

4. In Fig. 7 the voltage across R_1 is (a) 80 volts, the voltage across R_2 is (b) 80 volts, the voltage across R_3 is (c) 80 volts, and the voltage across R_4 is (d) 80 volts.

5. The voltage applied to R_2 in Fig. 8 (a) [✓ *(is)*]*(is not)* the battery voltage. The current through R_2 is (b) 3 amperes, and the resistance of R_2 is (c) 16 ohms. Using Ohm's law, the battery voltage must be (d) 48 volts.

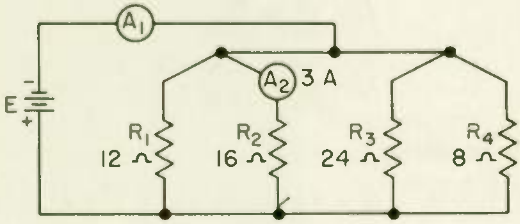

Fig. 8

ANSWERS

1. (a) Parallel (b) Does not (c) parallel . . . We will soon see that components do affect each other when connected in series. (d) Need not consider
2. (a) 2; (b) 5.5; (c) 1; (d) 8.5 3. 54. . . The current through R_1 is 20 A, through R_2 is 16 A, through R_3 is 10 A, and through R_4 is 8 A. The ammeter reads the sum of these currents.
4. (a) 80 (b) 80 (c) 80 (d) 80. . . The voltages across components in parallel are always equal.
5. (a) Is (b) 3. . . Ammeter A_2 reads the current through R_2. (c) 16 (d) 48. . . How this value is obtained is discussed in the next topic.

3

ADDITIONAL PARALLEL CIRCUIT PROBLEMS. . . In the preceding topic we practiced finding the total current when we knew the battery voltage and the resistance of each component. Now we will see how to solve parallel-circuit problems no matter what information we have to start with, providing it is adequate. No new principles are involved. Working any parallel circuit problem involves nothing more than using Ohm's law and Kirchhoff's current law.

EXAMPLE 1... Find the voltage E of the battery and the reading of the ammeter A_1 in Fig. 8.

SOLUTION... On studying the circuit, we notice that both the current through R_2 and the resistance of R_2 are known. When we know both current and resistance, we can always find the voltage by the Ohm's law formula $E = I \times R$. The voltage found is the battery voltage because R_2 is connected directly across the battery terminals.

$$E = I_2 \times R_2 = 3\text{ A} \times 16\,\Omega = 48\text{ V}$$

Hence, the battery voltage must be 48 V.

The reading of the ammeter A_1 is the sum of the currents through the four parallel branches. Hence, we must first find the unknown branch currents, which is easy now that we know the battery voltage.

$$I_1 = \frac{E}{R_1} = \frac{48\text{ V}}{12\,\Omega} = 4\text{ A}$$

$$I_3 = \frac{E}{R_3} = \frac{48\text{ V}}{24\,\Omega} = 2\text{ A}$$

$$I_4 = \frac{E}{R_4} = \frac{48\text{ V}}{8\,\Omega} = 6\text{ A}$$

The reading of the ammeter is

$$I_1 + I_2 + I_3 + I_4 = 4\text{ A} + 3\text{ A} + 2\text{ A} + 6\text{ A} = 15\text{ A}$$

EXAMPLE 2... Find the resistance of R_3 in Fig. 9.

SOLUTION... First we will find the current through R_3 by using Kirchhoff's current law, and then we will find the resistance of R_3 by using Ohm's law. But before we can use Kirchhoff's current law, we must first know the current through R_1 and R_2.

$$I_1 = \frac{E}{R_1} = \frac{36\text{ V}}{4\,\Omega} = 9\text{ A}$$

$$I_2 = \frac{E}{R_2} = \frac{36\text{ V}}{6\,\Omega} = 6\text{ A}$$

By Kirchhoff's law the total current I (which the ammeter shows to be 18 A) is equal to the sum of the three branch currents. The sum of I_1 and I_2 is 9 A + 6 A = 15 A. The current through I_3 must then be 18 A − 15 A = 3 A.

CHECK... $I = I_1 + I_2 + I_3 = 9\text{ A} + 6\text{ A} + 3\text{ A} = 18\text{ A}$, which is the reading of the ammeter.

Now to find the resistance of R_3:

$$R_3 = \frac{E}{I_3} = \frac{36\text{ V}}{3\text{ A}} = 12\,\Omega, \textit{ans.}$$

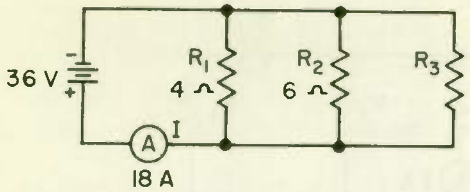

Fig. 9 Illustration for Example 2: find the resistance of R_3.

WHAT HAVE YOU LEARNED?

1. Ammeter *A* in Fig. 10 reads 27 amperes.

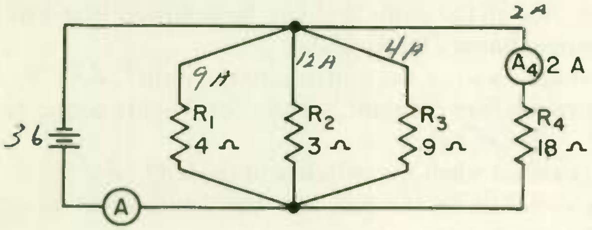

Fig. 10

2. The three resistors in Fig. 11 are in *(parallel)(series).* They are in parallel if, and only if, you can take each resistor in turn, trace through that resistor starting at point *B*, and return to point *C* without passing through either of the other two resistors.

3. The resistance of R_2 in Fig. 11 is 24 ohms.

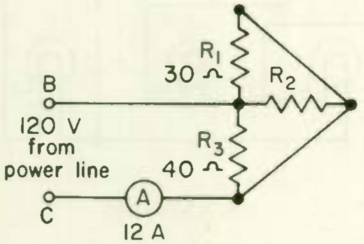

Fig. 11

4. The voltage of the battery in Fig. 12 is 80 volts.

5. The switch in Fig. 13 is called a double-pole double-throw (DPDT) switch. It has two switch blades *B* and *E*, which always move together. When the switch is thrown to the right, blade *B* makes an electrical connection with contact *C* and blade *E* makes a connection with contact *F*.

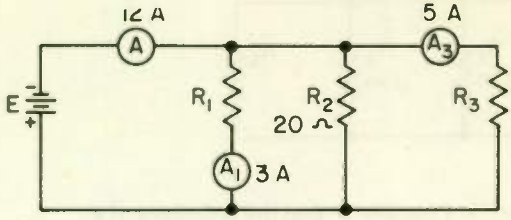

Fig. 12

When the switch is thrown to the left, *B* makes contact with *A* and *E* makes contact with *D*. Trace around the circuit to find the current path or paths when the switch is thrown to the right and again when the switch is thrown to the left. Start at the negative battery terminal and, for each switch position, find all the paths that can be followed that will bring you back to the positive battery terminal.

(a) What lights are on when the switch is to the right? L3 + L1

(b) When the switch is to the right, are the "on" lights connected in series or in parallel? SERIES

(c) What lights are on when the switch is to the left? L1 + L2

(d) When the switch is to the left, are the "on" lights in series or in parallel? PARALLEL

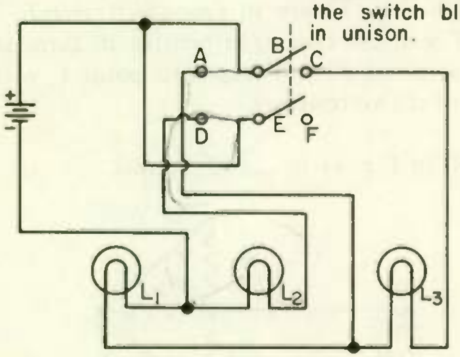

Dashed line means that the switch blades move in unison.

Fig. 13

ANSWERS

1. 27 A . . . The battery voltage is 36 V (2 A × 18 Ω); I_1 is 9 A; I_2 is 12 A; and I_3 is 4 A. In finding the total, don't forget the 2 A of I_4.

2. Parallel . . . Each of the three paths in Fig. 14 passes through one and only one resistor.

3. 24 . . . R_1 draws 4 A and R_3 draws 3 A for a total of 7 A for the two. Hence, R_2 must draw 12 A − 7 A = 5 A. $R_2 = E/I_2 = 120\text{ V} \div 5\text{ A} = 24\,\Omega$.

4. 80 . . . R_1 and R_3 together draw 8 A. Hence, R_2 must draw 4 A so the total of the branch currents will be 12 A. $E = I \times R = 4\text{ A} \times 20\,\Omega = 80\text{ V}$.

5. (a) L_1 and L_3 will be on . . . See Fig. 15(a) for the current path. Note that the

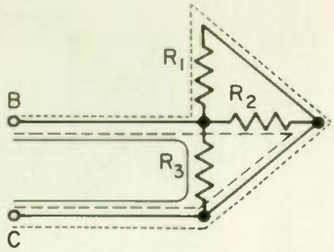

Fig. 14

path shown by the dashed line is the only possible way to trace around the circuit from negative battery terminal to positive terminal. (b) Series (c) L_1 and L_2 will be on . . . See Fig. 15(b) for current paths. Tracing from the negative battery terminal, upon reaching point H, there are two different paths we can follow that will bring us back to K and the positive battery terminal. One path is shown by the dashed line and the other by the solid line. (d) Parallel

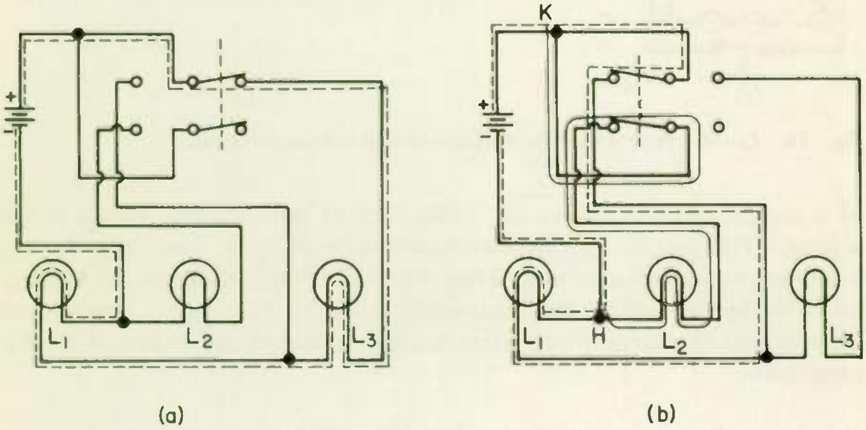

(a) (b)

Fig. 15

4 ELECTRONS START MOVING IN ALL PARTS OF THE CIRCUIT AT THE SAME TIME

. . . We have in the preceding pages analyzed series and parallel circuits by tracing the path taken by electrons leaving the negative plate of the battery until they get back to the positive plate. This is the usual method of circuit tracing because it is convenient—but some additional explanation is needed so you won't be misled about the nature of electron action when current flows.

If you suppose that electrical action literally starts at the negative battery terminal, you assume in Fig. 16(a) that, after switch S is closed, light L_1 will not come on until the electrons leaving the negative terminal have time enough to travel to L_1 and that L_2 will not come on until a fraction

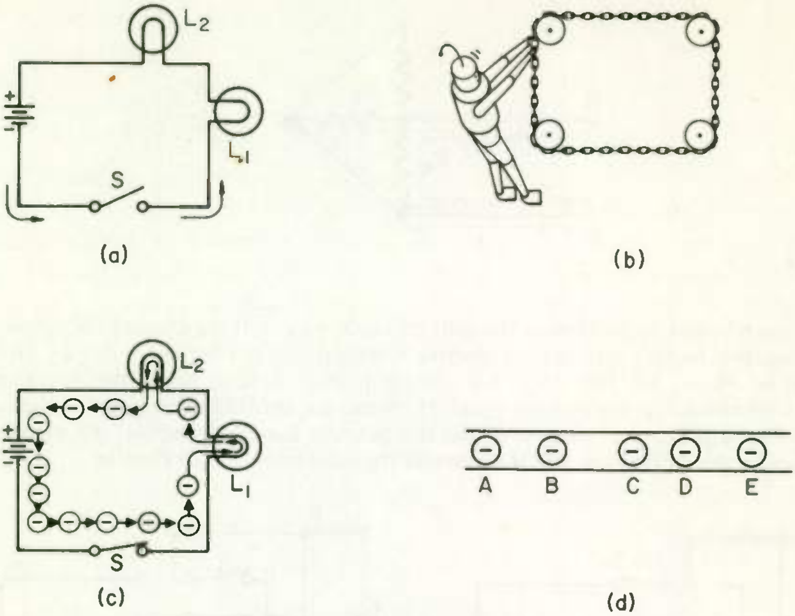

Fig. 16 **Current flow is like the movement of a continuous chain.**

of a second after L_1 comes on. This idea of how current works is all wrong. For one thing, the electrons move along a wire very slowly, seldom over an inch a minute. Thus if L_1 were 20 ft away from the battery and if we had to wait for the electrons to get from the negative terminal to L_1, it would be several hours after the switch was closed before the light came on!

What actually happens is that, when the switch is closed, the electrons start moving in all parts of the circuit almost instantly. The action is like that of the endless chain in Fig. 16(b). Although the chain may be pulled slowly, the links start moving everywhere in the chain almost the moment the operator starts pulling (not instantly, because the slack must first be taken out from between the links). Notice that the chain has no beginning and no end.

Current flow acts like the chain. Whether the switch is open or closed in Fig. 16(c), there are free electrons everywhere in the wire and the conducting parts of the components. These electrons correspond to the links of the chain. When the switch is closed, all the free electrons start moving almost at once, forming an endless chain of electrons moving slowly around the circuit. An important thing to note in (c) is that there is neither beginning nor end to the moving chain of electrons—you can't put your finger on a particular spot in the circuit and say that this is where the current starts. Only for convenience do you start tracing through a circuit at the negative battery terminal—not because the current starts there.

To see why the free electrons are "hooked" together like the links in a chain, so that one can't move along the wire without all the rest also moving, consider the short section of wire diagrammed in Fig. 16(d). Since every electron has a negative charge, all electrons repel one another, and therefore they try to get as far away from each other as they can. They are farthest away from each other when they are equally spaced along the wire. Suppose that electron *C* in (d) is pushed to the right from its normal position, as shown, say by the battery pumping action. That will make all the other electrons in the wire also move, and here's why. Electron *C* moving over close to *D* greatly increases the repulsive force between *C* and *D* (the closer like electric charges are to each other, the stronger the force of repulsion between them). Consequently, electron *D* is pushed over toward *E*, which in turn repels *E* to the right, and so on.

Looking at the electrons to the left of *C*, the distance between *B* and *C* has increased as *C* has moved to the right. That reduces the repulsion between *B* and *C*. As a result, electron *A* is pushing harder in trying to move *B* to the right than *C* is pushing in trying to push *B* to the left. Consequently, electron *B* moves to the right, which in turn weakens the repulsion between *B* and *A* and allows *A* also to be pushed to the right by the electron to its left.

Because of the time required for this electron jockeying to take place, there is a slight time delay after the switch is closed before all the electrons in the circuit are in motion. This delay corresponds to the time required to get the slack out of the chain in Fig. 16(b) before all the links move. The delay in a typical electrical circuit is extremely slight, a few millionths of a second or less. But slight as it is, it can be important, as you will see in later lessons.

COMBINED RESISTANCE IN SERIES AND PARALLEL CIRCUITS

A circuit can be simplified and made easier to understand if it is redrawn with several components replaced by a single *equivalent* component. The principle of equivalent components will be used in this part of the lesson to find the combined resistance of circuit components in series or parallel.

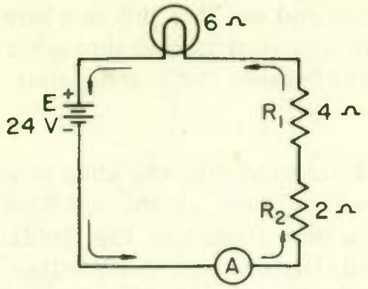

Fig. 17 **The current in a series circuit must make its way through all the resistances in the circuit.**

5 HOW EQUIVALENT CIRCUITS MAKE ELECTRONICS EASY . . .

The series circuit of Fig. 1 is redrawn in Fig. 17 with resistance and voltage values shown. It is hard for current to get through the extremely fine wire that forms the filament in a light bulb. Therefore a light bulb has resistance (opposes current flow) just as regular resistors do. In this case, the filament resistance is 6 Ω.

Let's find out what the ammeter *A* in Fig. 17 will read. Since this is a series circuit, every electron going around the circuit must pass through the 2-Ω, the 4-Ω, and the 6-Ω resistance. Each one of these resistances opposes (tries to stop) the current. Since the electrons must struggle through all three resistors, the going is a lot harder (which means the resistance is higher) than if the electrons had but one resistance to go through—the more obstacles there are in an obstacle course, the tougher it is to get around the course.

Since the electrons in Fig. 17 must first make their way through 2 Ω of opposition, then 4 Ω of opposition, and finally 6 Ω of opposition, the total opposition to current flow is 2 Ω + 4 Ω + 6 Ω = 12 Ω. If we had one 12-Ω resistor in the circuit instead of the three resistances shown, the current read by ammeter *A* would be the same as it is in the actual circuit. That being the case, we draw an *equivalent circuit* (see Fig. 18) in which the three actual resistances are replaced by a 12-Ω equivalent resistance.

An equivalent circuit is a simplified circuit that has the same performance—in regard to the aspects in which we are interested—as the original circuit. Top-notch technicians use lots of equivalent circuits because such circuits make it so much easier to understand what is going on.

By using Ohm's law, we can find at once the reading of ammeter *A* in Fig. 18(b):

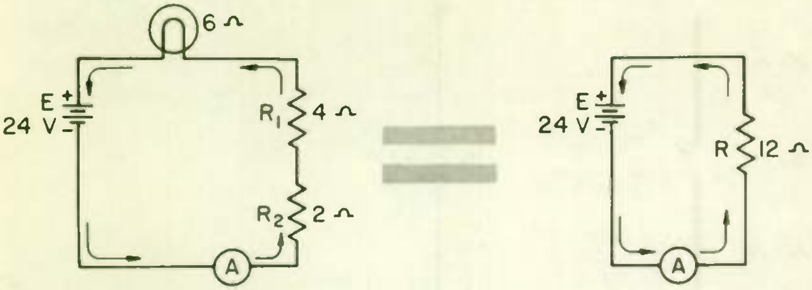

(a) Actual circuit (b) Equivalent circuit

Fig. 18 Simplifying a circuit by the use of an equivalent circuit.

$$I = \frac{E}{R} = \frac{24\ \text{V}}{12\ \Omega} = 2\ \text{A}$$

Since the ammeter in Fig. 18(b) reads 2 A, the ammeter in (a) will read the same thing. If the two ammeters did not read the same thing, the circuits would not be equivalent.

6 FINDING CURRENT AND TOTAL RESISTANCE IN A SERIES CIRCUIT

. . . The total, combined, resistance of two or more resistances is a single resistance of such value that, when used in place of the original resistances, it will keep the circuit current the same. The total, or combined, resistance is the equivalent resistance of the circuit resistances. The total resistance in Fig. 18(a) is 12 Ω, because if we replace the three resistances with a 12-Ω resistance, as in (b), the circuit current does not change.

When resistances are in series, the total resistance is easy to find. It is simply the sum of the individual resistances.

EXAMPLE 1 . . . In Fig. 19(a) the three resistors R_1, R_2, and R_3, shown connected in series, have values of 20, 30, and 40 Ω, respectively. Their total resistance R_t is ________ ohms.

SOLUTION . . .

$$R_t = R_1 + R_2 + R_3 = 20\,\Omega + 30\,\Omega + 40\,\Omega = 90\,\Omega, \textit{ans.}$$

EXPLANATION . . . The answer shows that the three resistors in series could be replaced by a single 90-Ω resistor, as shown in Fig. 19(b).

EXAMPLE 2 . . . If the three resistors shown in Fig. 19(a) are connected across a 9-V battery, the total current is ________ amperes.

SOLUTION . . . The total current is

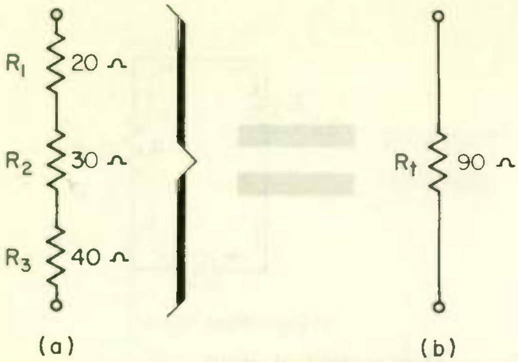

(a) (b)

Fig. 19 The total resistance of resistors in series equals the sum of the resistances of the individual resistors.

$$I = \frac{E}{R} = \frac{9\ \text{V}}{90\ \Omega} = 0.1\ \text{A},\ \textit{ans.}$$

EXPLANATION . . . Since the current through each element in a series circuit is the same, the current through R_1, R_2, R_3, and the battery is 0.1 A.

EXAMPLE 3 . . . A vacuum-tube filament is connected in series with a resistor. The color code on the resistor, green-blue-black, shows that the resistance R_r of the resistor is 56 Ω. By measuring with an ohmmeter, you find that the total resistance of the filament and resistor in series is 87 Ω. The resistance R_f of the filament is ________ ohms.

SOLUTION . . . $R_t = R_f + R_r$

$$87\ \Omega = R_f + 56\ \Omega$$

$$R_f = 31\ \Omega,\ \textit{ans.}$$

EXPLANATION . . . Since 87 Ω is the combined resistance of the filament and resistor in series, 87 minus the resistance of the resistor, 56 Ω, is the resistance of the filament.

CHECK . . . 31 Ω + 56 Ω = 87 Ω.

WHAT HAVE YOU LEARNED?

1. Three resistors with values of 15, 22, and 19 Ω are connected in series to an 84-V battery.

(a) Draw the circuit and mark the voltage and resistance values on it—that's the way to start working *any* electronics problem.

(b) Find the total resistance.

56 Ω

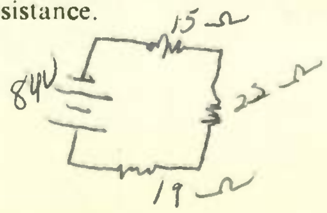

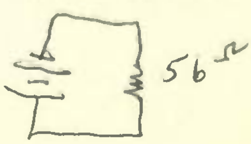

(c) Draw the equivalent circuit—electronics gets easy when you get in the habit of drawing equivalent circuits.

(d) Use Ohm's law to find the circuit current. 1.5A

2. If a relay coil has a resistance of 20 Ω, how much resistance must you connect in series with it so that the total circuit resistance is 50 Ω? 30 Ω

3. A series circuit is operated from an 80-V power source. If we want the circuit current to be 4 A, what total value of resistance do we need in the circuit? 20 Ω

4. If a relay coil requires a current of 1.5 A for proper operation and it is to be operated from a 24-V battery, what should the relay resistance be for the relay to draw the correct current? 16 Ω

5. If the resistance of the relay coil in Problem 4 were actually only 10 Ω, the relay would draw [✓ *(too much)*]*(too little)* current when operated from a 24-V battery.

6. Referring to Problem 5, you could decrease the current through the relay down to what it should be by (a) [✓ *(increasing)*] *(decreasing)* the total circuit resistance. To do so you would connect a resistor in (b) [✓ *(series)*] *(parallel)* with the relay coil.

(c) Draw a diagram of the circuit and mark battery voltage and coil resistance.

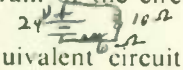

(d) Draw an equivalent circuit showing the proper value of equivalent (total) resistance for the circuit current to be the correct value of 1.5 A.

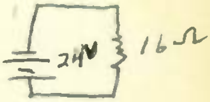

(e) What must be the value of the resistance placed in series with the relay coil? 6 Ω

7. Three resistors are connected in series. One resistor is color-coded brown-black-brown ((a) 100 ohms). The second is color-coded brown-brown-brown ((b) 110 ohms). The third resistor is not color-coded. You measure the total resistance of the circuit, which is 340 ohms. The resistance of the unmarked resistor is (c) 130 ohms. The correct color code for this resistor is (d) BROWN ORANGE BROWN

8. In Fig. 1, if R_1 is 10 Ω, R_2 is 20 Ω, and the lamp is 50 Ω, the combined resistance of the circuit is (a) 80 ohms. If the battery voltage E is 160 V, the circuit current is (b) 2 amperes. The current through R_1 is (c) 2 amperes; the current through R_2 is (d) 2 amperes; and the current through the lamp is (e) 2 amperes.

9. Show by a diagram how to connect three equal resistors together in such a way that the combined resistance of the three equals 3 times the resistance of each.

.0167
15000/250.0000

.02475
10100/250.000
20200
48000
40400
76000
70700
53000
50500

10. A fixed resistor of 10,000 Ω is connected in series with a variable resistor with a minimum value of 100 Ω and a maximum of 5000 Ω. The minimum resistance this combination can have is (a) 10,100 ohms, and the maximum value it can have is (b) 15,000 ohms. If this combination is connected across a 250-V power supply, the minimum possible current is 16.7 (c) ~~24.8~~ milliamperes and the maximum possible current is (d) 24.8 milliamperes.

ANSWERS

1. (a) See Fig. 20, left-hand diagram. (b) 56 Ω (c) See Fig. 20, right-hand diagram. (d) 1.5 A . . . $I = \frac{E}{R} = \frac{84\text{ V}}{56\ \Omega} = 1.5\text{ A}$

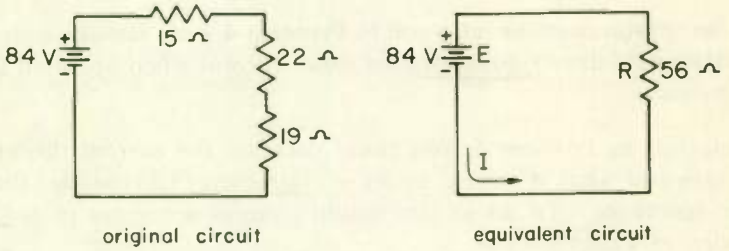

Fig. 20

2. 30 Ω . . . See Fig. 21.

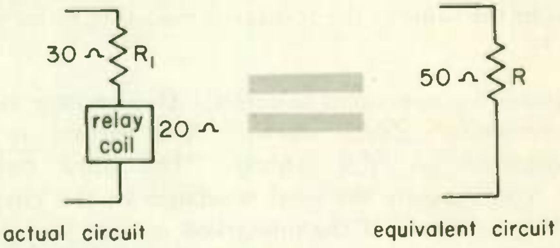

Fig. 21

3. 20 Ω . . . Use the Ohm's law formula, $R = \frac{E}{I} = \frac{80\text{ V}}{4\text{ A}} = 20\ \Omega$.

4. 16 Ω . . . $R = \frac{E}{I} = \frac{24\text{ V}}{1.5\text{ A}} = 16\ \Omega$.

5. Too much . . . The less the resistance, the more the current, because resistance opposes current flow.

6. (a) Increasing (b) Series (c) See Fig. 22, left side (d) See Fig. 22, right side. (e) 6 Ω . . . R_1 and the relay coil must have a total resistance of 16 Ω as shown in the equivalent circuit. $R_1 = 6\ \Omega$, since $10\ \Omega + 6\ \Omega = 16\ \Omega$.

7. (a) 100 (b) 110 (c) 130 . . . The combined resistance of the known re-

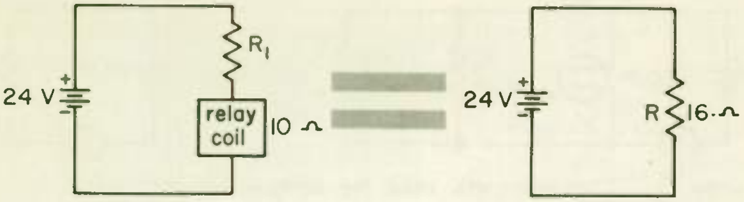

actual circuit

equivalent circuit

Fig. 22

sistors is 210 Ω. Total resistance is 340 Ω, so the resistance of the unmarked resistor is 340 − 210 = 130 Ω. (d) Brown-orange-brown

8. (a) 80 (b) 2 (c), (d), (e) 2 . . . In a series circuit, the current through one component is equal to the current through each of the other components.

9. —∧∧∧—∧∧∧—∧∧∧— . . . If the value of each resistor is 10 Ω, the total resistance is 30 Ω or 3 times the resistance of each individual resistor.

10. (a) 10,100; (b) 15,000

(c) 16.7 . . . Remember that the current is least when the resistance is highest, which is when the resistance is 15,000 Ω. Then the current is $I = \frac{E}{R} = \frac{250\text{ V}}{15{,}000\ \Omega} =$ 0.0167 A = 16.7 mA (multiply by 1000 to change amperes to milliamperes).

(d) 24.8 . . . The current is greatest when the resistance is least.

$$I = \frac{E}{R} = \frac{250\text{ V}}{10{,}100\ \Omega} = 0.0248\text{ A} = 24.8\text{ mA}.$$

7 RESISTANCE IN PARALLEL CIRCUITS . . . The combined or joint resistance of two or more resistances in parallel is a single resistance of such value that, when it is used in place of the original resistances, it will keep the circuit current the same; it is the equivalent resistance of the circuit resistances.

To find the joint resistance of the three branches in Fig. 5 with all switches closed, use Ohm's law to find what equivalent resistance we can use in place of the three resistances so that the reading of ammeter *A* will not change. Ammeter *A* reads 11 A.

$$R = \frac{E}{I} = \frac{40\text{ V}}{11\text{ A}} = 3.64\ \Omega$$

Thus we can replace the three resistances of Fig. 5 with an equivalent resistance, as shown in Fig. 23. The value of this combined or joint resistance is 3.64 Ω.

We shall next see how changes in the individual resistance values affect the combined resistance. We have learned that in series circuits the combined

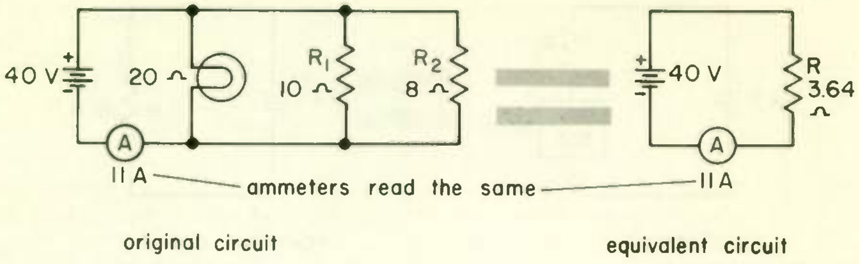

Fig. 23 **The combined resistance of 20, 10, and 8 Ω in parallel is 3.64 Ω.**

resistance is the sum of the resistances of the individual components. In other words, in a series circuit as shown in Fig. 24(a), adding resistive components *increases* the amount of opposition, or resistance, to current flow.

In parallel circuits, the situation is quite different. Each additional branch, as shown in Fig. 24(b), is another path along which current can flow. Thus, adding a resistance in parallel *decreases* the total resistance of the circuit.

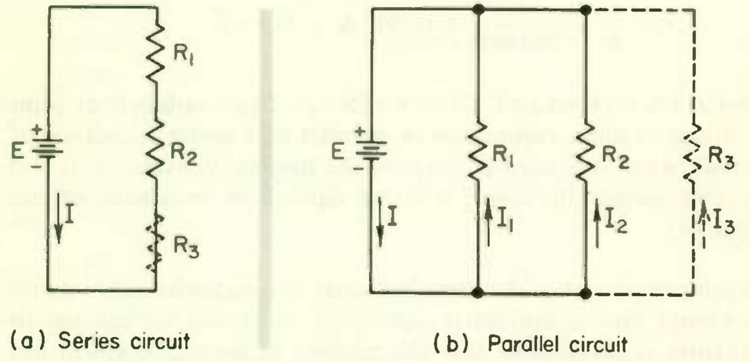

(a) Series circuit

(b) Parallel circuit

Fig. 24 **Effect of adding resistance in series and parallel circuits. In the series circuit (a), adding resistor R_3 increases opposition, or resistance, to the flow of current. In the parallel circuit (b), adding the branch with resistor R_3 adds another path along which current can flow and thereby *decreases* opposition, or resistance, to the flow of current.**

EXAMPLE 1 . . . In Fig. 25 five resistive components are shown connected in parallel. $R_1 = 5\ \Omega$, $R_2 = 8\ \Omega$, $R_3 = 10\ \Omega$, $R_4 = 16\ \Omega$, and $R_5 = 20\ \Omega$. Is the combined resistance of the circuit, as measured between points *A* and *B*, more or less than 5 Ω?

SOLUTION . . . The combined resistance is less than 5 Ω.

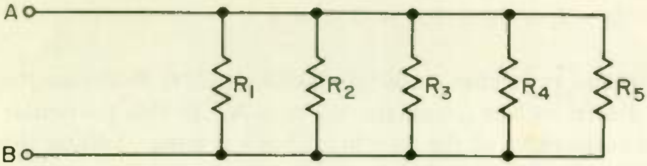

Fig. 25 **Circuit with five resistive parallel branches. The total resistance of a parallel circuit is always less than the resistance of the branch that has the lowest resistance.**

EXPLANATION ... In this example, the lowest resistance is 5 Ω. Each resistor connected in parallel across the 5-Ω resistor is another path along which current can flow, and each resistor therefore decreases the total resistance below 5 Ω. You can always be sure, without even performing any calculations, that the combined resistance of a parallel circuit is less than the resistance of the branch that has the lowest resistance.

Now let us see what happens in a circuit when one resistor is connected in parallel with a second, equal resistor. In Fig. 26(a) a 100-Ω resistor is connected across a 300-V battery. The current is

$$I_1 = \frac{E}{R_1} = \frac{300\ \text{V}}{100\ \Omega} = 3\ \text{A}$$

In Fig. 26(b) a second 100-Ω resistor R_2 is connected in parallel with the first. Notice that this second resistor is connected across the battery terminals in the same way the first resistor is. In other words, the voltage across R_2 is 300 V. The current I_2 through R_2 is

$$I_2 = \frac{E}{R_2} = \frac{300\ \text{V}}{100\ \Omega} = 3\ \text{A}$$

Remember that the total current is the sum of the branch currents; in this case the total current I_t is

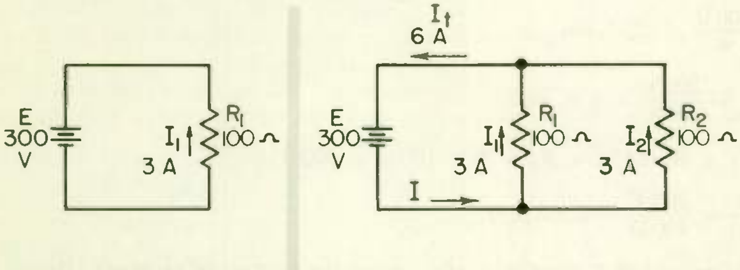

(a) (b)

Fig. 26 **When a parallel resistor is added to the circuit shown in (a), total current increases as shown in (b).**

$$I_t = I_1 + I_2 = 3\text{ A} + 3\text{ A} = 6\text{ A}$$

Thus, placing the second resistance in parallel with the first increases the amount of current drawn by the circuit from 3 to 6 A. In this particular example, where the resistances of the two branches are equal, adding the second equal resistor *doubles* the total current.

What happens to the combined resistance? Using Ohm's law for resistance, we find

In Fig. 26(a)

$$R = \frac{E}{I_1} = \frac{300\text{ V}}{3\text{ A}} = 100\ \Omega$$

In Fig. 26(b)

$$R = \frac{E}{I_t} = \frac{300\text{ V}}{6\text{ A}} = 50\ \Omega$$

Thus, adding the second equal resistor in parallel with the first *halves* the total resistance while it *doubles* the total current.

RULE: *To find the combined resistance of equal resistances in parallel, divide the value of a single resistance by the number of resistors.*

EXAMPLE 2 . . . In Fig. 27 four 100-Ω resistors are in parallel across a 200-V supply. The combined resistance of the circuit is (a) ________ ohms. The total circuit current I is (b) ________ amperes. If the four resistors were in series rather than in parallel, the combined resistance would be (c) ________ ohms and the total current would be (d) ________ amperes. When the resistors are connected in parallel, the current through any one of the four resistors is (e) ________ amperes. When the resistors are connected in series, the current through any one of the four resistors is (f) ________ amperes.

SOLUTION . . .

(a) $R_t = \dfrac{100\ \Omega}{4} = 25\ \Omega$, *ans.*

(b) $I = \dfrac{E}{R_t} = \dfrac{200\text{ V}}{25\ \Omega} = 8\text{ A}$, *ans.*

(c) $R_t = R_1 + R_2 + R_3 + R_4 = 4 \times 100\ \Omega = 400\ \Omega$, *ans.*

(d) $I = \dfrac{E}{R_t} = \dfrac{200\text{ V}}{400\ \Omega} = 0.5\text{ A}$, *ans.*

(e) The total current, 8 A, divides evenly among the four equal resistors. Hence, the current through any one of the resistors is $8 \div 4 = 2$ A, *ans.*

(f) From (d) the current is 0.5 A, *ans.*

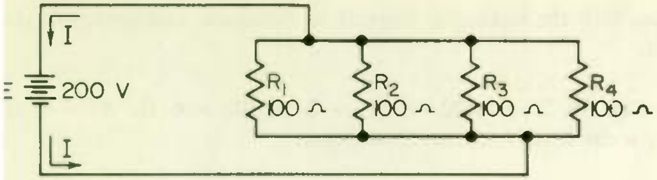

Fig. 27 **Illustration for Example 2.**

When a number of unequal resistances are in parallel, as in Fig. 28, the combined resistance is found by the formula

$$R_t = \frac{1}{\dfrac{1}{R_1} + \dfrac{1}{R_2} + \dfrac{1}{R_3} + \dfrac{1}{R_4} + \dfrac{1}{R_5}}$$

Thus, *the resistance of a parallel circuit is equal to the reciprocal of the sum of the reciprocals of the resistances of the individual branches.*

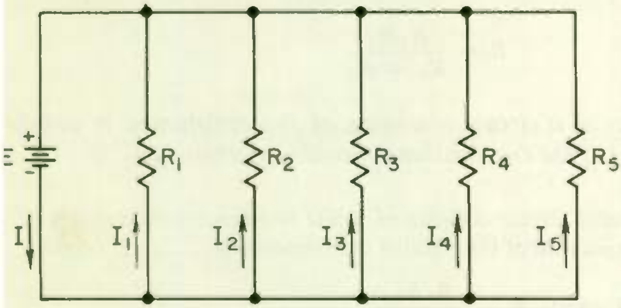

Fig. 28 **Parallel circuit containing five resistive branches.**

EXAMPLE 3 . . . A parallel circuit consists of four resistive branches: $R_1 = 3\ \Omega$, $R_2 = 5\ \Omega$, $R_3 = 20\ \Omega$, and $R_4 = 50\ \Omega$. The total resistance of the circuit is ________ ohms.

SOLUTION . . . $R_t = \dfrac{1}{\dfrac{1}{R_1} + \dfrac{1}{R_2} + \dfrac{1}{R_3} + \dfrac{1}{R_4}}$

$$= \frac{1}{\dfrac{1}{3} + \dfrac{1}{5} + \dfrac{1}{20} + \dfrac{1}{50}}$$

$$= \frac{1}{0.333 + 0.2 + 0.05 + 0.02} = \frac{1}{0.603} = 1.66\ \Omega,\ \textit{ans.}$$

EXPLANATION . . . Four resistive components are in parallel. Therefore, there are four terms in the denominator of the equation for resistance. To solve, we substitute numerical values into the equation, convert to decimals, and complete the operations indicated.

Example 4 ... In Fig. 28, if $E = 22$ V, $R_1 = 2\ \Omega$, $R_2 = 4\ \Omega$, $R_3 = 5\ \Omega$, $R_4 = 10\ \Omega$, and $R_5 = 20\ \Omega$, $I =$ ________ amperes.

Solution ...

$$R_t = \frac{1}{\frac{1}{R_1} + \frac{1}{R_2} + \frac{1}{R_3} + \frac{1}{R_4} + \frac{1}{R_5}}$$

$$= \frac{1}{\frac{1}{2} + \frac{1}{4} + \frac{1}{5} + \frac{1}{10} + \frac{1}{20}}$$

$$= \frac{1}{0.5 + 0.25 + 0.2 + 0.1 + 0.05} = \frac{1}{1.10} = 0.909\ \Omega$$

For the circuit, $I = \dfrac{E}{R_t} = \dfrac{22\text{ V}}{0.909\ \Omega} = 24.2$ A, *ans.*

For the special case of two resistive components in parallel, we can use a simpler formula:

$$R_t = \frac{R_1 R_2}{R_1 + R_2}$$

That is, *the resistance of a circuit consisting of two resistances in parallel is equal to the product of the two resistances divided by their sum.*

Example 5 ... A parallel circuit consists of a 5-Ω resistance in parallel with a 20-Ω resistance. The resistance of the parallel combination is ________ ohms.

Solution ... By the formula $R_t = \dfrac{R_1 R_2}{R_1 + R_2}$

$$R_t = \frac{5 \times 20}{5 + 20} = \frac{100}{25} = 4\ \Omega, \textit{ ans.}$$

Example 6 . . . Three resistors with values of 5, 20, and 50 Ω are connected in parallel. By using the special parallel resistance formula for two resistors, find the total resistance of the three resistors.

Solution . . . The parallel resistance of the 5Ω and 20 Ω resistor is equal to

$$R = \frac{5 \times 20}{5 + 20} = \frac{100}{25} = 4\ \Omega$$

We may now consider the circuit having only two resistors in parallel. One resistor is the 50-Ω resistor, and the other is 4-Ω equivalent resistor. Applying the special parallel resistor formula for two resistors again, we have

$$R_t = \frac{4 \times 50}{4 + 50} = \frac{200}{54} = 3.70\ \Omega, \textit{ ans.}$$

5 0
2 5 0
3 5
7 7½

44.1
272) 12000
1088
1120
1088
320
272
580

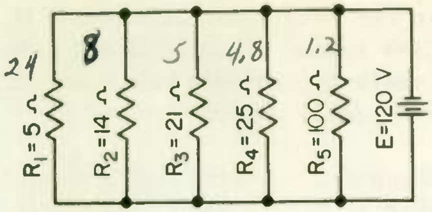

Fig. 29

WHAT HAVE YOU LEARNED?

1. Three resistors with values of 3, 5, and 15 Ω are connected in parallel. Their combined resistance is less than (a) 3 ohms. Calculation shows the combined resistance to be (b) 33 ohms.

2. Two resistors with values of 10 and 25 Ω are connected in parallel. By using the formula for resistance of two resistors in parallel ($R =$ (a) 7½ $\frac{R_1 \times R_2}{R_1 + R_2}$) you find their combined resistance is (b) 7½ ohms. As a quick check, you realize that the resistance must be less than (c) ____ ohms; therefore, the answer to (a) is reasonable.

3. Two 100-Ω resistors are connected in parallel. Their resistance is (a) 50 ohms. Three 100-Ω resistors are connected in parallel. Their combined resistance is (b) 33⅓ ohms. Four 100-Ω resistors are connected in parallel; their combined resistance is (c) 25 ohms.

4. Figure 29 shows five resistors connected in parallel. Use the general formula for resistors in parallel to find the combined resistance of the parallel combination of resistors:

$\frac{1}{R_1} =$ (a) $\frac{1}{5}$ $\quad \frac{1}{R_2} =$ (b) $\frac{1}{14}$ $\quad \frac{1}{R_3} =$ (c) $\frac{1}{21}$

$\frac{1}{R_4} =$ (d) $\frac{1}{25}$ $\quad \frac{1}{R_5} =$ (e) $\frac{1}{100}$

4

$\frac{1}{4}$

$\frac{25}{84}$

$\frac{31}{84}$

Therefore $R_t =$ (f) $\frac{31}{84}$ = (g) 2.72 ohms.

5. The total current through the parallel combination in Problem 4 is 44.1 amperes. (Use the combined resistance and Ohm's law for current.)

6. The total current through the parallel combination in Problem 4 is 43 amperes. (First determine the current through each individual resistor and then sum up the individual currents.)

7. Four light bulbs, each with a resistance of 160 Ω, are connected in parallel across a 120-V source. Their combined resistance is (a) 40 ohms. The current drawn by each light bulb is (b) .75 amperes, and the total current is (c) 3 amperes.

26
3200
120

8. Two resistors, 40 and 80 Ω, are connected in parallel. Their combined resistance is less than (a) 40 ohms. The combined resistance is (b) 26.7 ohms.

9. Three resistors, 40, 90, and 75 Ω, are connected in parallel. Their combined resistance is (a) 20.2 ohms. If connected across a potential of 100 V, the parallel combination will draw (b) 4.95 amperes.

10. When charging a storage battery, it is necessary to insert a resistance of 20 Ω in series with the battery to limit current to the proper value. The resistance is made up of light bulbs, each with a resistance of 140 Ω, connected in parallel. How many bulbs should be used to produce the required resistance? Seven.

ANSWERS

1. (a) 3 . . . Combined resistance is always less than the least of the resistances.
(b) 1.67 . . . $R_t = \dfrac{1}{\dfrac{1}{R_1} + \dfrac{1}{R_2} + \dfrac{1}{R_3}}$

$$= \frac{1}{\frac{1}{3} + \frac{1}{5} + \frac{1}{15}}$$

$$= \frac{1}{0.333 + 0.200 + 0.0667} = \frac{1}{0.600} = 1.67\ \Omega$$

2. (a) $\dfrac{R_1 \times R_2}{R_1 + R_2}$; (b) 7.14; (c) 10   3. (a) 50; (b) 33⅓; (c) 25

4. (a) 0.2; (b) 0.0714; (c) 0.0476; (d) 0.04; (e) 0.01; (f) $\dfrac{1}{0.369}$; (g) 2.71

5. 44.3 . . . 120 V ÷ 2.71 Ω = 44.3 A.

6. 44.3 . . . I_1 = 24 A, I_2 = 8.57 A, I_3 = 5.71 A, I_4 = 4.8 A, I_5 = 1.2 A; then 24 + 8.57 + 5.71 + 4.8 + 1.2 = 44.3 A.

7. (a) 40; (b) 0.75; (c) 3   8. (a) 40; (b) 26.7   9. (a) 20.2; (b) 4.95

10. Seven . . . $\dfrac{140\ \Omega}{7} = 20\ \Omega$.

8

CONDUCTANCE . . . So far in our discussion of d-c circuits, we have studied only *resistance*, which is a measure of the *opposition* of a circuit to the flow of current. Resistance is, of course, usually represented by the letter R and is measured in ohms.

Now let us turn our attention to a new quantity, *conductance*, which is a measure of *how easy* it is for a current to flow through a circuit. Conductance is usually represented by the letter G and is measured in *mhos*. Notice that "mho" is "ohm" spelled backwards.

Conductance G is the reciprocal of resistance R. That is,

$$G = \frac{1}{R}$$

Thus, the conductance of a 100-Ω resistor is

$$G = \frac{1}{R} = \frac{1}{100} = 0.01 \text{ mho}$$

Since conductance is the reciprocal of resistance, resistance is also the reciprocal of conductance. Therefore, $R = \frac{1}{G}$. This means that we can easily convert back to resistance. For example, if $G = 0.01$ mho,

$$R = \frac{1}{G} = \frac{1}{0.01 \text{ mho}} = 100\ \Omega$$

which checks our previous calculation.

WHAT HAVE YOU LEARNED?

1. The unit of conductance is the (a) mHO, and the symbol for conductance is (b) G. Conductance is the reciprocal of (c) R, and therefore the formula for conductance is (d) $G = \frac{1}{R}$.

2. The greater the conductance, the easier it is for a current to flow through a circuit. Therefore, a circuit with a conductance of 0.05 mho will have (a) *(more)* [✓ *(less)*] current for a given voltage than a circuit with a conductance of 0.5 mho. The greater the circuit resistance, the (b) LESS the circuit conductance. The greater the circuit conductance, the (c) GREATER the circuit resistance.

3. If the resistance of a circuit is 25 Ω, its conductance is (a) .04 mhos. If the resistance of a circuit is 10 Ω, its conductance is (b) .1 mhos. If the conductance of a circuit is 0.02 mho, the resistance of the circuit is (c) 50 ohms.

4. Suppose 12 V is applied to a circuit and the current is 6 A. The circuit conductance is .5 mhos.

1. (a) Mho; (b) G; (c) resistance; (d) $G = \frac{1}{R}$ 2. (a) Less; (b) less; (c) less

3. (a) 0.04 . . . $\frac{1}{25} = 0.04$ mho (b) 0.1 (c) 50 . . . $\frac{1}{0.02} = 50\ \Omega$

4. 0.5 . . . $R = \frac{E}{I} = 2\ \Omega$; $G = \frac{1}{R} = \frac{1}{2} = 0.5$ mho

VOLTAGES IN SERIES CIRCUITS

The voltages across the components of a series circuit are not equal to the circuit power source voltage, nor are these voltages generally equal to each other. Series circuits are much used in electronics where a voltage lower than the power supply voltage is needed. Connecting components in series will never produce a voltage higher than the power supply voltage in a d-c circuit. In an a-c circuit, however, it sometimes will, as you will see in a later lesson.

9 VOLTMETERS AND THEIR USE . . . As preceding illustrations have shown, an ammeter is connected in series, so that the current being measured must pass through the ammeter. The needle deflection is proportional to the amount of current passing through the meter. In other words, we hook up an ammeter in just the same way we would a water flow meter, as shown in Fig. 30(a). The water in the system must flow through the flow meter, just as the current in (b) must flow through the ammeter.

But notice in Fig. 30(a) that we don't connect a water pressure gage so that the water flows through it. If we tried to, no water could flow, since water can't get through a pressure gage. The gage consists of a diaphragm that is distended by the water pressure. This bulging out of the diaphragm pushes against the pressure-indicating needle.

Since a voltmeter measures the electrical equivalent of pressure, it can not be connected in series like an ammeter. If it were connected in series, only negligible current would get through, because a voltmeter has an extremely high resistance. As shown in Fig. 30(b), a voltmeter must be connected in parallel with the voltage to be measured. That is, one of the voltmeter test leads is connected to each side of the voltage being measured. In Fig. 30(b) we connect the leads to the two battery terminals and thus measure the battery voltage.

In using an ammeter be extremely careful that you don't connect it as you

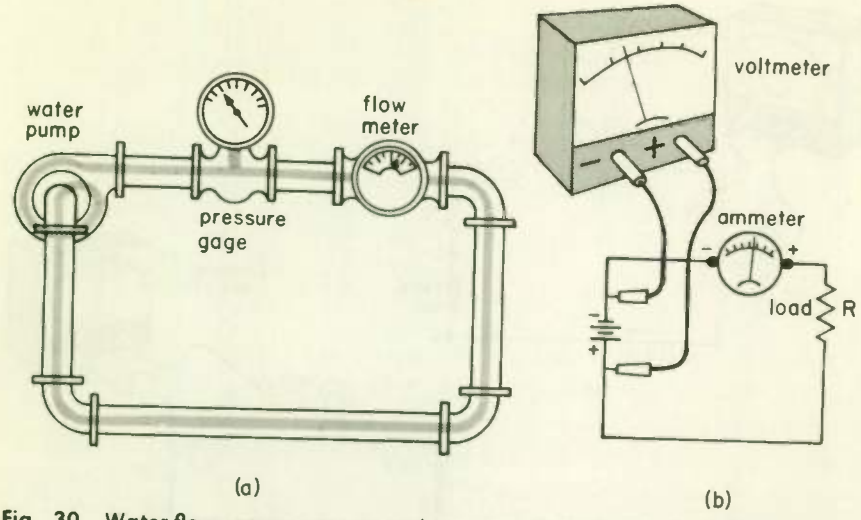

Fig. 30 **Water flow measurements and corresponding electrical measurements.**

would a voltmeter. An ammeter has a very low resistance, and so it would draw a huge current if connected across a voltage source. As a result, the ammeter would burn out instantly; see Fig. 31. When the ammeter is

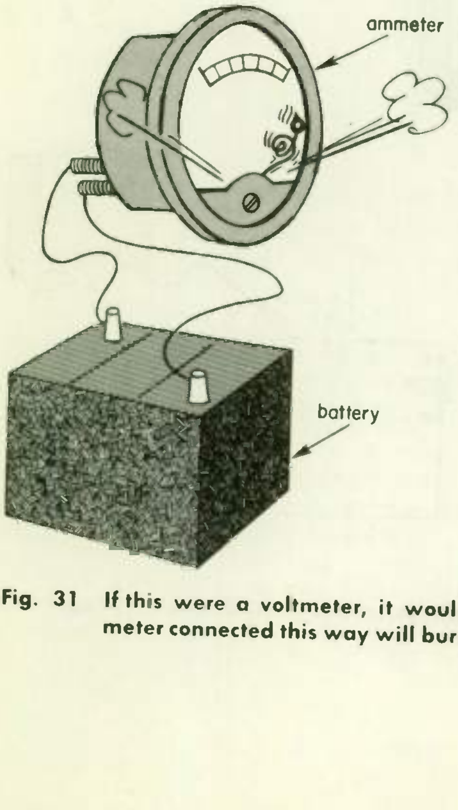

Fig. 31 **If this were a voltmeter, it would be connected correctly, but an ammeter connected this way will burn out at once.**

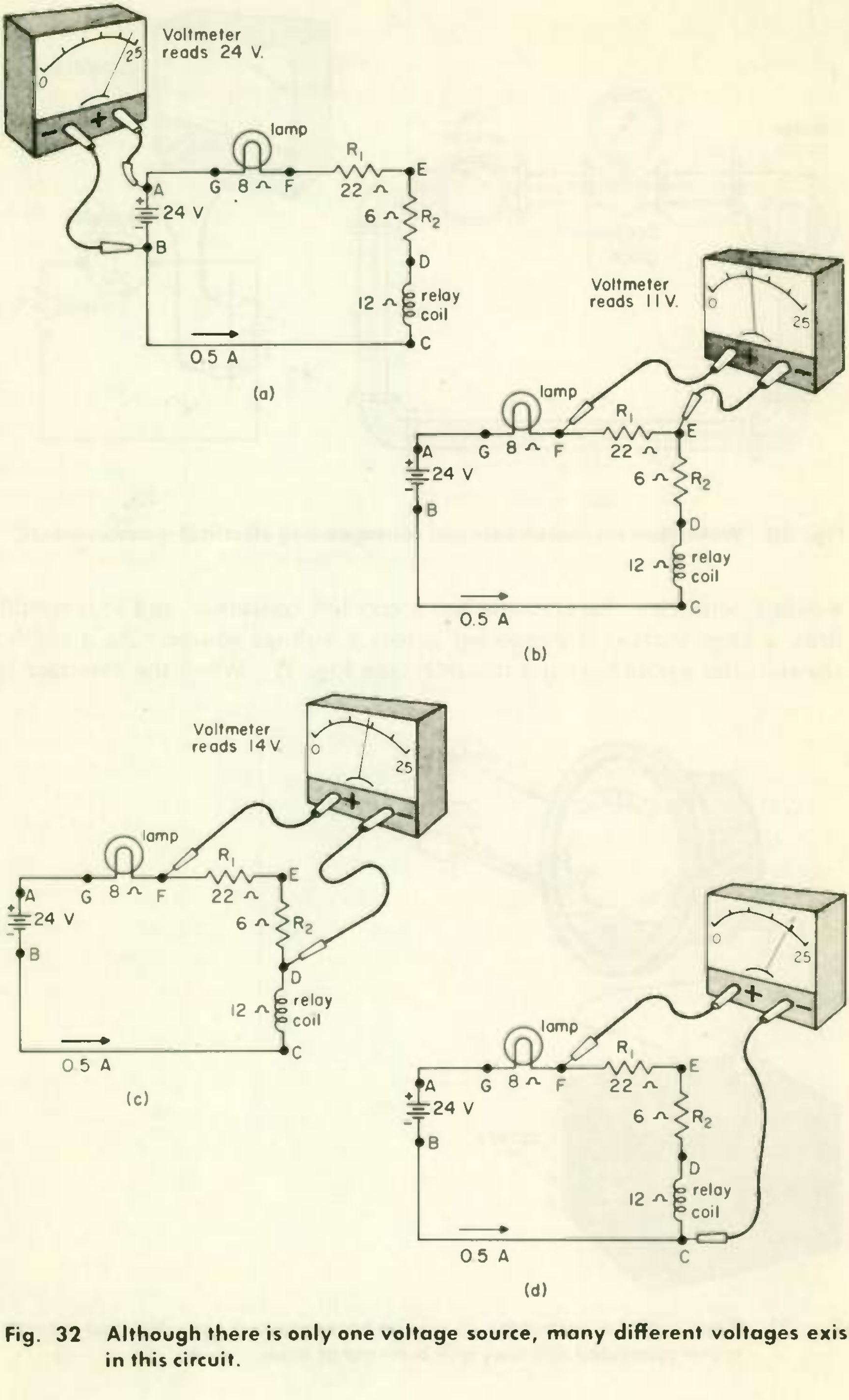

Fig. 32 **Although there is only one voltage source, many different voltages exist in this circuit.**

properly connected as in Fig. 30(b), the resistance of the load R limits the current from the battery so that the ammeter will not burn out unless the current taken by the load is greater than the meter is designed to measure.

By "load" (a term used a lot in electronics) we mean the device to which the voltage source is furnishing power. Although we represent the load in Fig. 30(b) by a resistance, it could be a toaster, an amplifier, a transistor, or anything at all that you are using the battery to supply current to. The value of the resistance R is the equivalent resistance of the actual load, whatever the load might be.

10 A RESISTOR CAN HAVE A VOLTAGE . . . A voltmeter connected across the power source in a circuit, such as the battery of Fig. 32(a), reads the voltage of that source. What may be more surprising is that a circuit component that is not generating electricity can also have a voltage. For example, if the voltmeter is connected across R_1, as in part (b) of the figure, it will read 11 V, although the resistor is obviously not a source of power.

This brings us again to the idea of an equivalent circuit. The resistor R_1 in Fig. 32(b) is equivalent to an 11-V battery, because the voltmeter reading is the same as it would be if we replaced R_1 with an 11-V battery. The lamp, the relay, and R_2 also have voltages across them, and therefore can be looked at as equivalent voltage sources.

You don't need a voltmeter to find out what the voltage is across R_1—just use Ohm's Law. $E = I \times R = 0.5\ \text{A} \times 22\ \Omega = 11\ \text{V}$. Ohm's law tells you what ingredients you must have to get a voltage across a component or part of a circuit that doesn't have a battery or other power source in it—the ingredients are current and resistance. Any component or part of a circuit that has resistance will have a voltage across it if there is current flowing through it.

The voltmeter in Fig. 32(c) is connected to points F and D, and therefore it measures the voltage across R_1 and R_2 in series. Since resistances in series add, the R_1-R_2 combination is equivalent to a single resistor of 28 Ω connected between F and D in place of R_1 and R_2. By Ohm's law the voltmeter will read $E = I \times R = 0.5\ \text{A} \times 28\ \Omega = 14\ \text{V}$.

A voltage divider, much used in electronics, makes practical use of the fact that a resistor can be used as an equivalent voltage source. A voltage divider consists of two or more resistors in series across a power supply. It is used to obtain a voltage lower than that of the power supply. If we

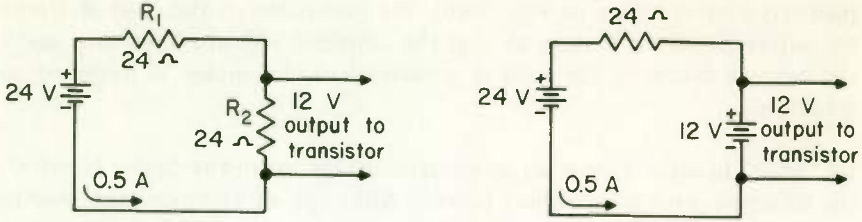

(a) Voltage-divider circuit

(b) Equivalent circuit, assuming transistor draws only a small current

Fig. 33 **A voltage divider for obtaining a 12-V output from a 24-V battery.**

have a 24-V battery and we needed 12 V to power a transistor, we could use the voltage-divider circuit of Fig. 33(a) to get the needed 12 V. The equivalent circuit in (b) shows how the voltage across R_2 is equivalent to a 12-V battery, so that the transistor operates as if it were actually used across a real 12-V battery.

An equivalent circuit is often equivalent only under specified conditions. In the equivalent circuit, Fig. 33(b), it is assumed that the current drawn by the transistor is small compared with the 0.5 A through R_1. Since the transistor only draws 0.01 A, this requirement is met. A more elaborate equivalent circuit, which you must get further along in your study of electronics to understand, is needed if a heavy current is to be taken from the voltage-divider output. This discussion is only a preview of voltage dividers. Later lessons will explain them fully.

WHAT HAVE YOU LEARNED?

1. Even though the load on a circuit might be a transmitter, it can be represented by a resistance, such as R on Fig. 30(b). The value of R is the (a) EQUIVILANT resistance of the transmitter. If the load were six vacuum-tube heaters connected in parallel, each with a resistance of 18 Ω, then the value to show for the load resistance R would be (b) 3 ohms.

2. The voltmeter in Fig. 32(d) reads 20 volts.

3. If the voltmeter leads in Fig. 32 are connected to points D and E, the voltmeter will read 3 volts.

$480\overline{)120}$ .25

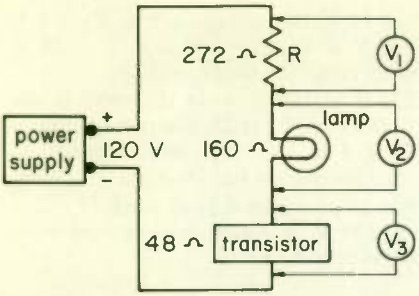

Fig. 34

4. If the voltmeter is connected to points *E* and *C*, it will read 9 volts.

5. The voltage across the lamp in Fig. 32 is 4 volts.

6. If the voltmeter is connected to points *B* and *C*, Fig. 32, it will read 0 volts.

7. Add the voltages found across each of the four components in Fig. 32. Is the sum equal to the battery voltage? yes.

8. In Fig. 34 voltmeter V_1 reads (a) 68 volts, voltmeter V_2 reads (b) 40 volts, and voltmeter V_3 reads (c) 12 volts.

9. Add the voltmeter readings in Fig. 34. Is the sum equal to the supply voltage? yes.

10. The lamp in Fig. 34 will burn at proper brilliancy if it is manufactured to be used on 40 volts.

ANSWERS

1. (a) Equivalent (b) 3 . . . The combined or equivalent resistance of six 18-Ω resistors in parallel is 18/6 = 3 Ω.
2. 20 . . . The equivalent resistance between points *F* and *C* is 22 Ω + 6 Ω + 12 Ω = 40 Ω. *E* = *I* × *R* = 0.5 A × 40 Ω = 20 V.
3. 3 4. 9 . . . The equivalent resistance between points *E* and *C* is 6 Ω + 12 Ω = 18 Ω. *E* = *I* × *R* = 0.5 A × 18 Ω = 9 V.
5. 4 6. 0 . . . To have a voltage between points *B* and *C*, you must have a current flowing between the points and you must have resistance between the points. You have current, but no resistance. It is true that the wire connecting point *B* to point *C* would have a slight resistance, but this can be neglected.
7. Yes. The sum is 24 V, which is the same as the battery voltage . . . The voltage

across the lamp is 4 V; the voltage across R_1 is 11 V; the voltage across R_2 is 3 V; and the voltage across the relay coil is 6 V. 4 V + 11 V + 3 V + 6 V = 24 V. In any series circuit the sum of the voltages must equal the supply voltage.

8. (a) 68 . . . First find the circuit current. 272 Ω + 160 Ω + 48 Ω = 480 Ω, the total resistance. $I = E/R$ = 120 V/480 Ω = 0.25 A. V_1 reads the voltage across R, which will be $E = I \times R$ = 0.25 A × 272 Ω = 68 V. (b) 40 (c) 12

9. Yes . . . 68 V + 40 V + 12 V = 120 V. See discussion for Problem 7. Seeing if the sum is equal to the supply voltage is a good way to check your work.

10. 40 . . . Even though the power supply is 120 V, a 120-V bulb would burn dimly here because the voltage across the lamp is only 40 V.

11 POLARITY OF SERIES CIRCUIT VOLTAGES . . . The polarity of the voltages connected with a series circuit, so far ignored, will now be considered. D-c voltmeters always have their leads marked (+) and (−). To read the voltage of a battery (or other voltage source) the (+) lead of the voltmeter must connect to the positive battery terminal and the negative lead to the negative terminal, as in Fig. 32(a). If the voltmeter is connected with the leads reversed, the meter needle will try to swing backwards—which it can't do—and no meter reading will be obtained. When using a voltmeter, you can determine the polarity of any circuit voltage. Connect the voltmeter, and if no reading is obtained, reverse the leads. When a reading is obtained, the (+) and (−) markings on the meter indicate the polarity of the voltage being measured.

In Fig. 32(b) the polarity of the voltage across R_1 is left end positive and right end negative, as determined at once by merely looking at the voltmeter. The polarity of the voltage between points F and D in Fig. 32(c) is point F positive with respect to point D, which is negative.

You don't have to use a voltmeter to find the polarity of the voltages across the components in Fig. 32. Just notice which way the current flows through the components. *The current always enters a passive component at the negative terminal and leaves at the positive terminal.* A passive component is one that is not actually a voltage source, although it may have a voltage across it and therefore be equivalent to a voltage source. A resistor is an example of a passive component. The lamp, the relay coil, R_1, and R_2 are passive components in Fig. 35. The current enters the relay coil at the bottom and leaves at the top. Therefore, the bottom of the coil is negative with respect to the top, as marked in the drawing. Similarly, the polarities of the lamp and R_1 and R_2 are as marked.

An active component is one that directly supplies operating power to the circuit. Batteries, generators, power supplies, and wall outlets are examples of active components. There would be no current in Fig. 35 if it weren't for the battery. Hence, the battery is an active component and all the other components (which would have no voltages of their own if it

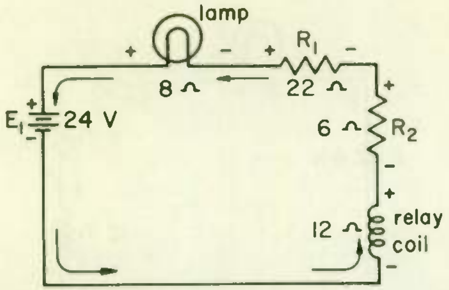

Fig. 35 Polarity of components in a series circuit.

were not for the battery) are passive components.

Since an active component is a voltage source, it has its own polarity determined by its design, and its polarity, unlike the polarity of a passive device, does not depend on the direction of current flow. Whereas it is the current direction that determines the polarity of a passive device, it is the polarity of an active device that determines the current direction. If there is only one active component in the circuit, the current direction, as you have previously learned, is from the negative terminal through the rest of the circuit and back to the positive terminal, as shown in Fig. 35.

If there is more than one active circuit component, the current doesn't always flow in the direction indicated in the preceding paragraph. In Fig. 36(a) an additional battery E_2 has been added to the circuit. Battery E_2 is pushing the current clockwise around the circuit, while E_1 is pushing in the opposite direction. The higher voltage, of course, wins out in this tug of war, so that the current direction is as shown. Although the current through E_1 is opposite in direction to that of Fig. 35, the battery polarity does not change.

The result of active voltage E_1 in Fig. 36(a) "bucking" active voltage E_2 is a net voltage of 30 V − 24 V = 6 V. Hence, the circuit of Fig. 36(a) can be simplified by replacing the two batteries with a single equivalent voltage source of 6 V, E in Fig. 36(b).

If we were to reverse the polarity of E_1 in Fig. 36(a), the two battery voltages would add. Then the voltage of the equivalent battery E in Fig. 36(b) would be 30 V + 24 V = 54 V. You can easily tell if the voltages of two active components add or subtract. Just note which way each active voltage is trying to push the current. If both voltages are pushing in the same direction, the two voltages add. Another way to tell is to remember that, for the voltages to add, the positive terminal of one cell must be

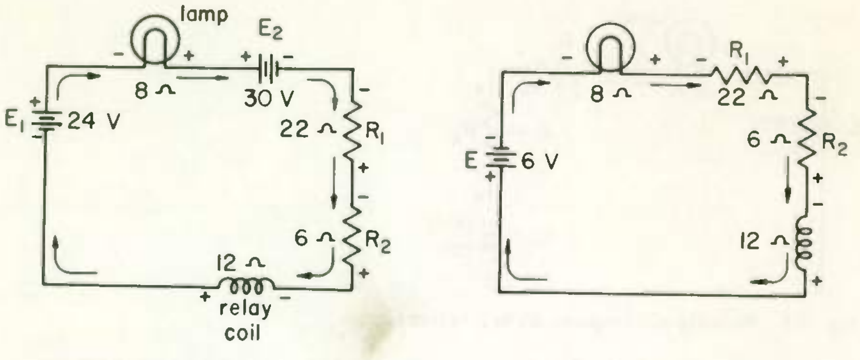

(a) Actual circuit (b) Equivalent circuit

Fig. 36 When voltage sources buck, polarity of the higher active voltage determines the current direction.

connected to the negative terminal of the other cell. In making this check ignore all passive components between the terminals. For example, in Fig. 36(a) notice that the (+) terminal of E_1 connects to the (+) terminal of E_2 (pay no attention to the lamp in between). Hence, the two cells are bucking each other.

WHAT HAVE YOU LEARNED?

1. In Fig. 37(a) the voltmeter reads (a) 30 volts. The voltage across across the light bulb is (b) 30 volts.

2. In the circuit shown in Fig. 37(b) the total circuit voltage is (a) 345 volts. The voltage to the radio receiver is (b) 345 volts.

3. To connect two voltages in series so that the voltages add, connect the

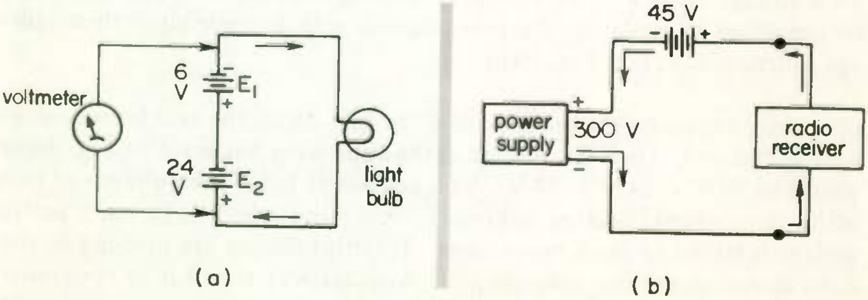

(a) (b)

Fig. 37

positive terminal of one of the voltages to the NEGATIVE terminal of the other.

4. If the battery shown in Fig. 37(b) had its leads reversed, the voltage to the radio receiver would be 255 volts.

5. If in the circuit shown in Fig. 37(a) the resistance of the light bulb is 10 Ω, the current drawn by the bulb is 3 amperes.

6. If you had a 250-V power supply, you could connect in series another power supply with an output of 150 volts in order to operate a 400-V transmitter.

7. The current direction in Fig. 38(a) is as shown. Mark on the drawing the polarity of the power supply and the polarity of each of the passive components. In Fig. 38(b) determine the current direction and mark it on the drawing, and also mark the polarity of the voltage across each of the passive components.

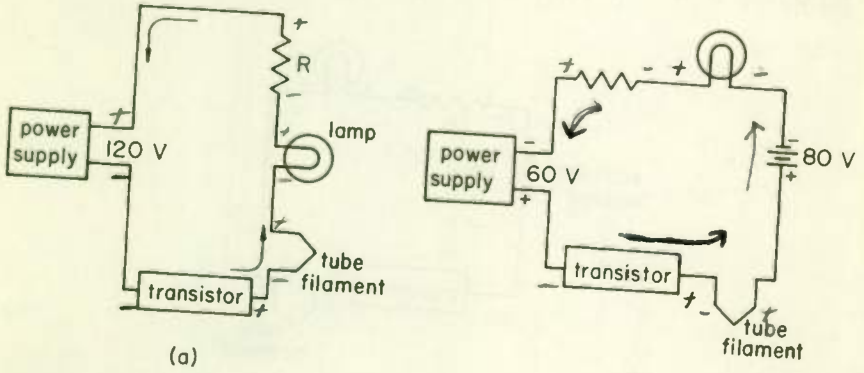

Fig. 38

8. Draw an equivalent circuit for Fig. 39(b) in which the voltage sources are replaced by an equivalent voltage source. Show current direction and all polarities, and show the equivalent voltage in the circuit where the power supply is now located.

ANSWERS

1. (a) 30 (b) 30 2. (a) 345 (b) 345 ... The entire voltage of the two voltages sources in series is applied to the radio receiver.
3. Negative 4. 255 ... 300 V − 45 V = 255 V.

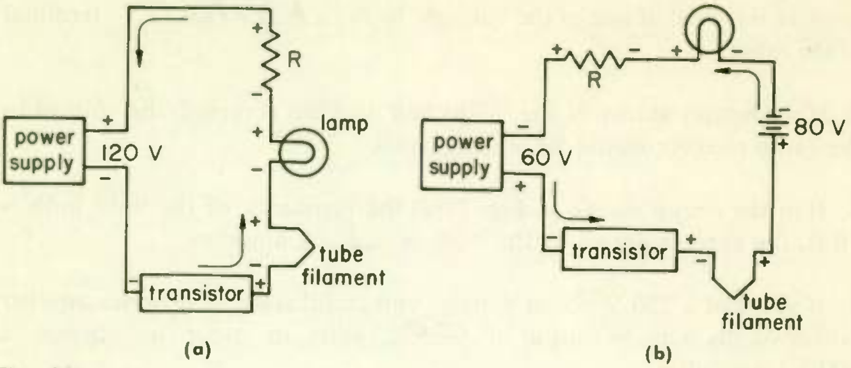

Fig. 39

5. 3 . . . Use the formula $I = \frac{E}{R}$, where E is the voltage actually applied to the bulb, which is 30 V. $I = \frac{30}{10} = 3$ A.

6. 150 . . . 400 V − 250 V = 150 V.

7. (a) See Fig. 39(a). (b) See Fig. 39(b). 8. See Fig. 40.

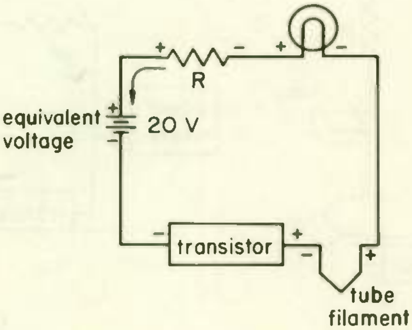

Fig. 40

12

KIRCHHOFF'S VOLTAGE LAW . . . The voltages across the components in a series circuit can be classified as *voltage drops* and *voltage rises*. Suppose we trace or walk around a circuit in the direction of current flow. Whenever we come to a component across which the voltage acts to boost the circuit current up to a higher value, we say the voltage across that component is a voltage rise. If the voltage across the component acts to decrease the current flow, the voltage across that component is called a voltage drop.

Whenever we come to a resistor in walking around the circuit in the direction of current flow, the voltage across that resistor will be a voltage drop. Resistors act to decrease current flow, since resistance is opposition to current flow. The voltage across any passive component that you come to in walking around a circuit in the current direction will be a voltage drop, because all passive components oppose current flow.

To understand a little better why voltage drops are so named, suppose we want to operate a 6-V lamp from a 9-V battery. We can do so by connecting in series with the lamp a resistor of such value that the voltage across it is 3 V, as shown in Fig. 41. The resistor drops the battery voltage 3 V, bringing the 9 V of the battery down to the desired 6 V for operating the lamp. However, the 6 V across the lamp is also a voltage drop, since the lamp is a passive component.

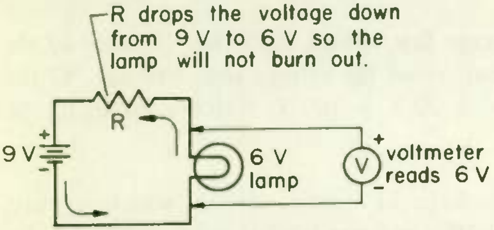

Fig. 41 Operating a 6-V lamp from a 9-V battery.

As we walk around a series circuit in the direction of current flow, any active component we come to would ordinarily be a voltage rise, *but not always*. Consider the circuit of Fig. 42. The 100 V of the power supply pushes current around the circuit in the direction shown, and it is therefore a voltage rise. If we start at the negative terminal of this power supply and walk around the circuit, we come first to another active component, the 20-V battery E_2. Now, E_2 is connected "bucking," so that it is trying to push current in the direction opposite to the way we are walking. Because of the way it is connected, it reduces the circuit current instead of increasing it. Battery E_2 is therefore a voltage drop. If we were to reverse its polarity, battery E_2 would then be a voltage rise.

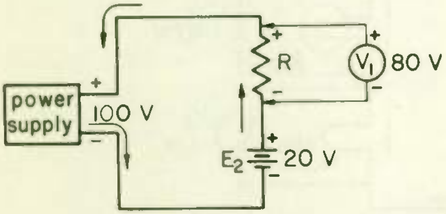

Fig. 42 Both the resistor and E_2 are voltage drops.

When you have a series circuit in which two active components are so connected that they oppose each other and are trying to force the current in opposite directions, you may wonder which way the circuit current will flow. The direction is determined by the source with the higher voltage, since it overpowers the other voltage source. Thus in Fig. 42 the 100-V source, and not the 20-V source, determines the direction in which the current will flow.

The voltage developed by an active voltage source, such as a battery or a generator, is often called an *electromotive force*, abbreviated emf. It is also called the battery or generator *potential*. It is practical for you to consider voltage, potential, and emf as meaning the same thing, except that voltage across a passive component is not usually called an emf. A voltage drop is also called an *IR* drop, since its value is equal to $I \times R$.

Now we get to Kirchhoff's voltage law, which says that *the sum of the voltage drops in a series circuit must equal the voltage rises*. In Fig. 42 the sum of the voltage drops is 80 V + 20 V = 100 V, which is equal to the voltage rise.

When there is only one active voltage in a series circuit, which is most often the case, we reduce Kirchhoff's voltage law to simpler English by stating that the sum of the voltage drops must equal the supply voltage. In Fig. 41 the sum of the voltage drops is 3 V + 6 V = 9 V, which equals the supply voltage.

WHAT HAVE YOU LEARNED?

1. What must the power supply voltage be in Fig. 43?

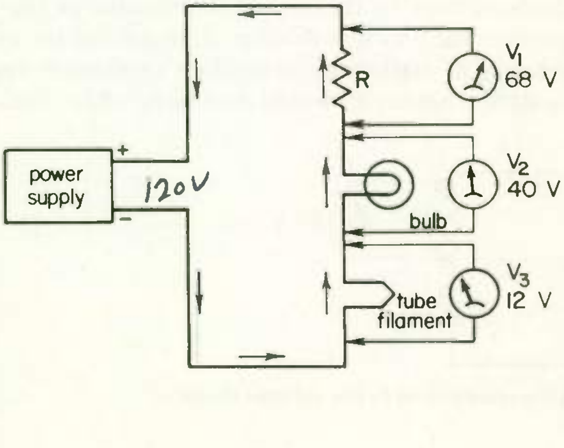

Fig. 43

2. What voltage rating should the bulb in Fig. 43 have in order to operate at normal brilliancy? 40V

3. The tube used in the circuit of Fig. 43 should have a filament designed to operate on 12 volts.

4. If two resistances of equal value are in series across a voltage source, the voltage across one resistor is the same as that across the other. If $R_1 = R_2$ in Fig. 44 and if the voltage across R_1 is 15 V, then the voltage across R_2 is (a) 15 volts and the voltage of battery E is (b) 30 volts. If two identical light bulbs, each rated at 15 V, are connected in series, the battery furnishing current to the bulbs should have a voltage of (c) 30 volts if the bulbs are to light at normal brilliancy.

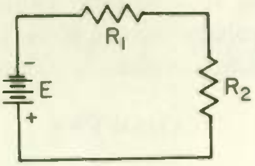

Fig. 44

5. Two identical light bulbs, each rated at 115 V, are connected in series. The voltage applied to this circuit should be 230 volts if the bulbs are to burn at normal brilliancy.

6. Tube filaments are often operated in series. Figure 45(a) shows four identical filaments, F_1, F_2, F_3, and F_4, in series. If the proper operating voltage for each filament is 6.3 V, then the proper power supply voltage E is (a) 25.2 volts. If the actual power supply voltage is greater than this value, which is often the case, a resistor R, as shown in Fig. 45(b), can be connected in series to provide proper operation. If the voltage across R is 20 V, then the power supply voltage E should be (b) 45.2 volts for

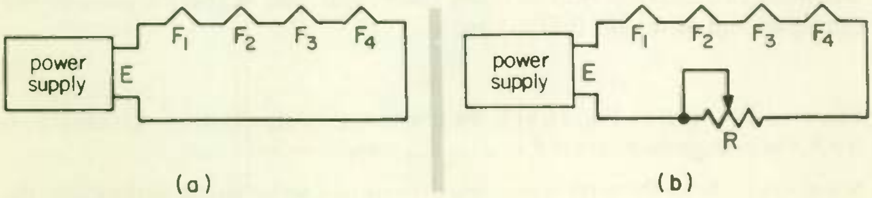

(a)

(b)

Fig. 45

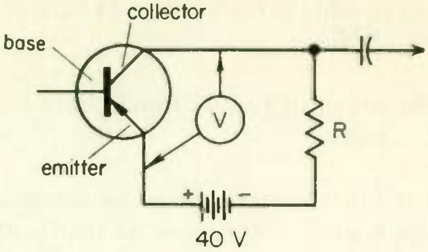

Fig. 46

proper voltage on the tube filaments. If the power supply voltage is 30 V, then the value of *R* should be adjusted until the voltage across it is (c) 4.8 volts for proper voltage on the tube filaments.

7. In Fig. 46 the collector-to-emitter circuit of a transistor is shown in series with *R* and across the 40-V battery. Voltmeter *V* reads the collector-emitter voltage. If the voltage across *R* is 12 V, the voltage between collector and emitter is 28 volts.

ANSWERS

1. 120 V . . . The sum of the voltage drops is 68 V + 40 V + 12 V = 120 V. Since this must equal the source voltage, the power supply voltage must be 120 V.
2. 40 V . . . The voltage rating of the bulb should be that of the actual voltage across the bulb, and not the voltage of the power supply.
3. 12   4. (a) 15; (b) 30; (c) 30
5. 230 . . . The applied voltage must be the sum of the voltages across the components, or 115 V + 115 V = 230 V.
6. (a) 25.2 . . . Applied voltage must be the sum of the voltages across the components: 4 × 6.3 V = 25.2 V.
(b) 45.2 . . . The power supply voltage must equal the voltage across the filaments plus the voltage across *R*: 25.2 V + 20 V = 45.2 V.
(c) 4.8 . . . 30 V − 25.2 V = 4.8 V.
7. 28 . . . The sum of the voltages around the series circuit must equal the supply voltage: 40 V − 12 V = 28 V.

13 FIGURING VOLTAGES IN SERIES CIRCUITS

. . . No new principles are involved in this topic. The only tools needed for any of the problems that follow are Ohm's law and Kirchhoff's voltage law. But tools are useless until you develop skill in using them, and that is the purpose of the examples and problems that follow.

EXAMPLE 1 . . . If *R* in Fig. 45(b) is 80 Ω and the current through filament F_1 is 0.5 A, the voltage drop across *R* is ________ volts.

SOLUTION . . . Since the current through all parts of a series circuit is the same, the current through *R* is also 0.5 A. Then

$$E = I \times R = 0.5\ \text{A} \times 80\ \Omega = 40\ \text{V},\ \textit{ans.}$$

EXAMPLE 2 . . . Assuming a current of 0.5 A, what value should R in Fig. 45(b) have in order that the voltage across it will be 20 V?

SOLUTION . . .

$$R = \frac{E}{I} = \frac{20\ \text{V}}{0.5\ \text{A}} = 40\ \Omega,\ \textit{ans.}$$

EXAMPLE 3 . . . A vacuum-tube filament is rated at 6.3 V and 300 mA. You want to operate the tube filament from a 12.3-V supply. To apply the correct voltage across the filament, you connect a resistance of ________ ohms in series with the filament.

SOLUTION . . . $I = 300\ \text{mA} = 0.3\ \text{A}$. Then

$$E_r = 12.3 - 6.3 = 6\ \text{V}$$

$$R_r = \frac{E_r}{I} = \frac{6\ \text{V}}{0.3\ \text{A}} = 20\ \Omega,\ \textit{ans.}$$

EXPLANATION . . . Since current in all parts of a series circuit is of the same value, the current through the resistor is 300 mA. The voltage across the filament should be 6.3 V; therefore, voltage across the resistor should be 12.3 V – 6.3 V = 6 V. The value of the resistor is calculated from Ohm's law.

EXAMPLE 4 . . . A 1000-Ω resistor R_1 is connected in series with a 3000-Ω resistor R_2 and the combination is placed across a 400-V source, as shown in Fig. 47. Current in the circuit is (a) ________ milliamperes. Voltmeter V_1 reads (b) ________ volts, and voltmeter V_2 reads (c) ________ volts.

SOLUTION . . . $R = R_1 + R_2 = 1000\ \Omega + 3000\ \Omega = 4000\ \Omega$.

(a) $I = \dfrac{400\ \text{V}}{4000\ \Omega} = 0.1\ \text{A} = 100\ \text{mA}$, *ans.*

(b) Voltage across R_1 is $E_1 = IR_1 = 0.1\ \text{A} \times 1000\ \Omega = 100\ \text{V}$, *ans.*

(c) Voltage across R_2 is $E_2 = IR_2 = 0.1\ \text{A} \times 3000\ \Omega = 300\ \text{V}$, *ans.*

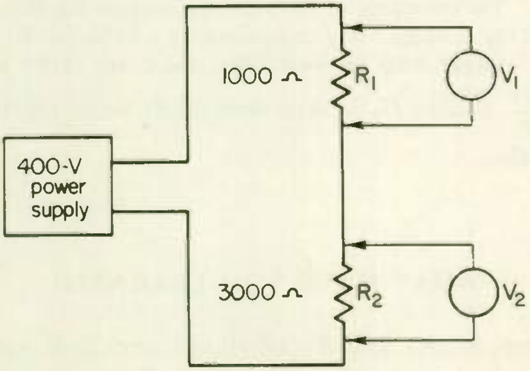

Fig. 47

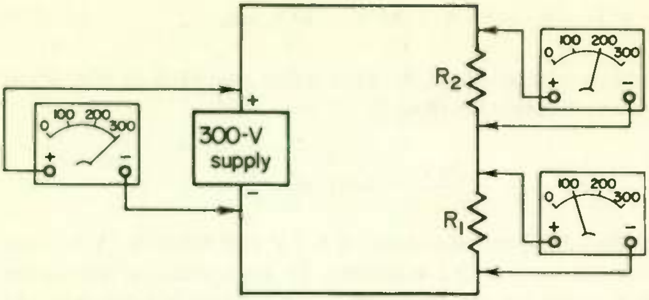

Fig. 48 **The sum of the voltage drops across R_1 and R_2 equals the supply voltage.**

EXPLANATION ... The total resistance in a series circuit is equal to the sum of the resistances. Ohm's law for current gives us 0.1 A as the current through the circuit. Ohm's law for voltage gives the voltage drop across each resistor.

Notice that the ratio of the voltages across the two resistors (100 to 300, or 1 to 3) equals the ratio of the values of the two resistors (1000 to 3000, or 1 to 3). Notice also that the sum of the voltage drops across the two resistors equals the supply voltage (100 V + 300 V = 400 V).

EXAMPLE 5 ... Figure 48 shows two resistors in series across a 300-V source. Circuit voltages are indicated by three voltmeters. Since the voltage drop across R_2 is greater than the drop across R_1, the resistance of R_2 is (a) ________________ than the resistance of R_1. If the current through R_2 is 100 mA, the resistance of R_2 is (b) ____________ ohms. The resistance of R_1 is (c) ____________ ohms.

SOLUTION ... (a) Greater

(b) $R_2 = \dfrac{E_2}{I} = \dfrac{200\text{ V}}{100\text{ mA}} = \dfrac{200\text{ V}}{0.1\text{ A}} = 2000\,\Omega$, *ans.*

(c) $R_1 = \dfrac{E_1}{I} = \dfrac{100\text{ V}}{0.1\text{ A}} = 1000\,\Omega$, *ans.*

EXPLANATION ... The resistance of R_2 is greater because the voltage drop across it is greater, and the resistance of a component in a series circuit is directly proportional to the voltage drop across it. The resistance of R_2 is found by the formula $R_2 = \dfrac{E_2}{I}$. Because I is the same value for R_1, we are able to determine the resistance of R_1 also.

WHAT HAVE YOU LEARNED?

1. Three resistors R_1, R_2, and R_3, of 10, 30, and 20 Ω, respectively, are connected in series across a 240-V supply. The current through R_1 is

(a) 4 amperes; that through R_2 is (b) 4 amperes; and that through R_3 is (c) 4 amperes. The voltage drop across R_1 is (d) 40 volts; that across R_2 is (e) 120 volts; and that across R_3 is (f) 80 volts. The total voltage drop across the three resistors, (g) 240 volts, equals the (h) Source voltage.

2. A light bulb with 200 Ω resistance is designed to operate at 115 V. It is desired to operate the bulb from a 230-V line. To prevent the bulb from burning out, a 300-Ω resistor is connected in series with it to drop the voltage across it to a lower value. (a) Draw a diagram of the circuit. (b) What is the voltage drop across the resistor? 138 (c) What is the voltage across the bulb? 92 (d) Will the bulb burn normally, burn dimly, or burn out? dimly

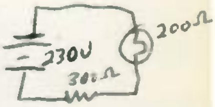

3. In Problem 2, what value of resistance can be used to set the voltage drop across the bulb at 115 V? 200 Ω

4. Three identical light bulbs are operated in series across 120 V. What is the voltage across each bulb? 40 V

0
14.1

5. Two light bulbs, one with a resistance of 140 Ω and one with a resistance of 200 Ω are connected in series across a 240-V line. The voltage across the bulb with a resistance of 140 Ω is (a) 99 volts, and the voltage across the other bulb is (b) 141 volts.

262.5
3 | 785.

6. The filaments of five identical tubes are connected in series. Each filament requires 6.3 V for proper operation. What voltage is required to operate the group of tubes? 31.5

316
15 | 4740

7. Each of the filaments described in Problem 6 draws 0.3 A. If the required voltage is obtained from a 110-V line by using a dropping resistor, what value of resistance is required? 262.5

8. The heater of a 50C5 tube operates at 50 V and draws 150 mA. (a) Can it be operated in series with a 12BE6 tube that also draws 150 mA, but at only 12.6 V? YES (b) If so, what voltage is required across the two tubes in series? 62.6 (c) What value of dropping resistor is required if operation is from a 110-V line? 316 Ω

ANSWERS

1. (a) 4; (b) 4; (c) 4; (d) 40; (e) 120; (f) 80; (g) 240; (h) source
2. (a) See Fig. 49. (b) 138 V; (c) 92 V; (d) Burn dimly . . . The bulb will burn dimly because the voltage across it is less than 115 V.

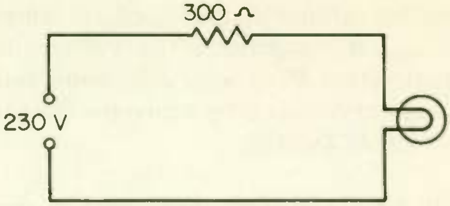

Fig. 49

3. 200 Ω ... Half of the supply voltage is desired across the bulb. Hence, the resistance of the dropping resistor should equal the resistance of the bulb.
4. 40 V 5. (a) 98.8; (b) 141 6. 31.5 V
7. 262 Ω ... The voltage must be dropped from 110 V down to 31.5 V, a drop of 78.5 V. The value of resistance is $R = \frac{E}{I} = \frac{78.5\text{ V}}{0.3\text{ A}} = 262\ \Omega$
8. (a) Yes ... In a circuit with 150 mA flowing, the correct voltage appears across each tube. (b) 62.6 V
(c) 316 Ω ... The voltage must be dropped 110 V − 62.6 V = 47.4 V:

$$R = \frac{E}{I} = \frac{47.4\text{ V}}{0.15\text{ A}} = 316\ \Omega$$

LESSON 2323-1

SERIES AND PARALLEL D-C CIRCUITS

EXAMINATION

Circle the number of the correct answer for each question that follows. When you are finished, transfer the answers to the answer sheet by putting X's in the proper squares. When the graded answer sheet is returned to you, correct in this book any questions you may have missed. By doing so, you will have a record of the correct answers to all questions for review purposes.

1. If a vacuum tube that has a filament rated at 0.25 A and 5 V is to be operated from a 6-V battery, what is the value of the necessary series resistor?
   (1) 2.5 Ω (2) 20 Ω [✓ (3) 4 Ω] (4) 24 Ω

36.3
109
3

2. What value of resistance should be connected in series with a 6-V battery that is to be charged at a 3-A rate from a 115-V d-c line?
   (1) 2 Ω (2) 38.3 Ω (3) 18 Ω [✓ (4) 36.3 Ω]

3. A relay with a coil resistance of 500 Ω is designed to operate when 0.2 A flows through the coil. What value of resistance must be con-

50
100
20

nected in series with the coil if operation is to be from a 110-V d-c line?
(1) 100 Ω (2) 550 Ω [✓ (3)] 50 Ω (4) 500 Ω

4. Define the term "conductance."
   (1) The change in current accompanied by a change in voltage
   [✓ (2)] The ability of a circuit to conduct current
   (3) The ability of a circuit to resist current
   (4) The change in voltage accompanied by a change in resistance

5. What is the unit of conductance?
   (1) Ohm (2) Volt (3) Coulomb [✓ (4)] Mho

6. What is the conductance of a circuit if 6 A flows when 12 V is applied to the circuit?
   (1) 72 mho [✓ (2)] 0.5 mho (3) 0.2 mho (4) 2 mho

$\frac{1}{\frac{1}{3}+\frac{1}{15}}$

$\frac{1}{\frac{9}{15}} = .6$

$\frac{1}{.6} = 1.66$

7. If resistors of 5, 3, and 15 Ω are connected in parallel, what is their combined resistance?
   [✓ (1)] 1.67 Ω (2) 5.89 Ω (3) 2.34 Ω (4) 4.59 Ω

8. What is the combined resistance of a parallel circuit consisting of one branch of 10 Ω resistance and one branch of 25 Ω resistance?
   (1) 5.39 Ω (2) 3.92 Ω (3) 7.38 Ω [✓ (4)] 7.14 Ω (5) 35 Ω

$\frac{250}{35}$

$\frac{10}{10} = 1$

$\frac{20}{30} = .67$

9. If the voltage applied to a circuit is doubled and the resistance of the circuit is increased to three times its former value, what will be the final current value? HINT: Assign values and work out problems to see how the current is affected.
   (1) Double the original value
   (2) One-third the original value
   (3) Six times the original value
   [✓ (4)] Two-thirds of the original value

10. You need an 8-Ω resistor but have only a 10-Ω, a 12-Ω, a 16-Ω, an 18-Ω, and a 24-Ω resistor. You can get the 8-Ω you need by connecting two of the resistors you have in parallel. Which would be the larger of the two resistors you would use?
    (1) 24 Ω [✓ (2)] 18 Ω (3) 16 Ω (4) 12 Ω

11. Refer to Question 10. Which would be the smaller of the two resistors you would use?
    (1) 18 Ω [✓ (2)] 16 Ω (3) 12 Ω (4) 10 Ω

1

50 $\frac{1}{12000}$ $\frac{1}{8000}$ $\frac{1}{4000}$

2 3 6

.11

24,000 45

1000

241.01100

2020'2...

1,000 45|1000000

11

2020|24

4

.006

24V

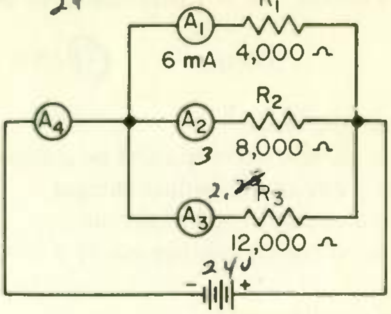

Fig. 50

12. The reading of ammeter A_1 in Fig. 50 is 6 mA. What does ammeter A_4 read?
(1) 3 mA [✓ (3)] 11 mA (5) 16 mA (7) 36 mA
(2) 6 mA (4) 15 mA (6) 18 mA (8) None of the above

13. What value must R in Fig. 51 have if ammeters A_1 and A_2 read the same?
(1) 10 Ω [✓ (2)] 12 Ω (3) 15 Ω (4) 20 Ω (5) 50 Ω
(6) Value depends upon battery voltage, which is not given.

12

600

50

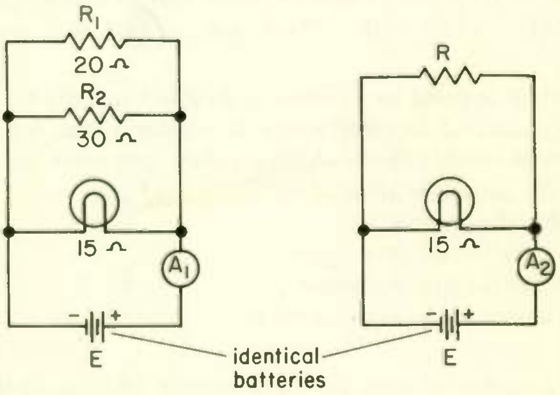

Fig. 51

14. Many electronic technicians do not have an ammeter that will measure currents greater than one ampere. However, it is easy for them to measure a larger current if they need to do so. To measure the current taken by the motor in Fig. 52, the technician inserts a 1.2-Ω resistor in series with the motor. He then measures the voltage across that resistor, which is 2.6 V. How much current does

2.16

1.2|26

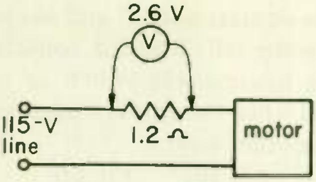

Fig. 52

the motor draw?

(1) 0.461 A (3) 1.92 A (5) 2.6 A (7) 24 A
(2) 1.2 A [✓ (4) 2.17 A] (6) 9.58 A (8) 44.2 A

15. One way to make a light dimmer for two lights is to install a switch such that the lights are connected in parallel when the switch is thrown one way and in series when it is thrown the other way. The lights will be dim when
[✓ (1) they are connected in series.]
(2) they are connected in parallel.

16. To make the light dimmer of Question 15 we use what is known as a double-pole double-throw switch, shown in Fig. 53. Such a switch has two moving blades, *A* and *B*. When the switch is thrown to the

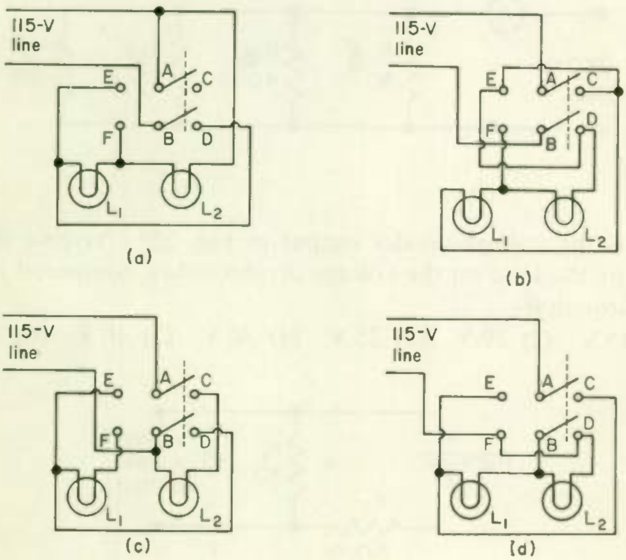
Dashed line means that the switch blades move in unison.

Fig. 53

right, blade *A* makes contact with *C* and blade *B* makes contact with *D*. When thrown to the left, blade *A* contacts *E* and *B* contacts *F*. In which part of the figure is the switch so connected that lights L_1 and L_2 are in parallel when the switch is thrown one way and in series when it is thrown the other way?

[✓ (1) (a)]   (2) (b)   (3) (c)   (4) (d)

17. The tube heaters in a TV set are sometimes connected in series and sometimes in parallel. You can tell if a heater is working by the glow in the tube from the red-hot heater or by feeling the tube to see if it is hot. You pull one tube from a set that is working OK and note that all the other tubes cool off. This probably indicates that

[✓ (1)] the heaters are connected in series.
(2) the heaters are connected in parallel.
(3) pulling the tube caused the fuse to blow.

18. A certain clothes dryer has four heating elements, which are in parallel as shown in Fig. 54 when set for maximum heat. Heater resistance values are as shown. Since the customer's complaint is that the clothes are slow in drying, it is likely that one of the elements is either burned out or not getting current. The ammeter reads 16 A. Which element is faulty?

(1) R_1 (2) R_2 [✓ (3) R_3]   (4) R_4

3
~~6~~
~~12~~
~~24~~
~~16~~
8
~~4~~
2

1,67

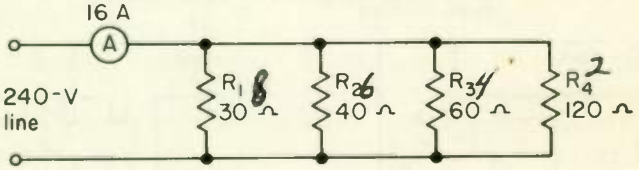

Fig. 54

19. What is the voltage-divider output in Fig. 55? Assume the current taken by the load on the voltage divider is low compared to the current through R_2.

[✓ (1) 15 V]   (2) 20 V   (3) 25 V   (4) 30 V   (5) 40 V   (6) 50 V

,5
15
25

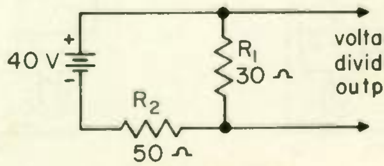

Fig. 55

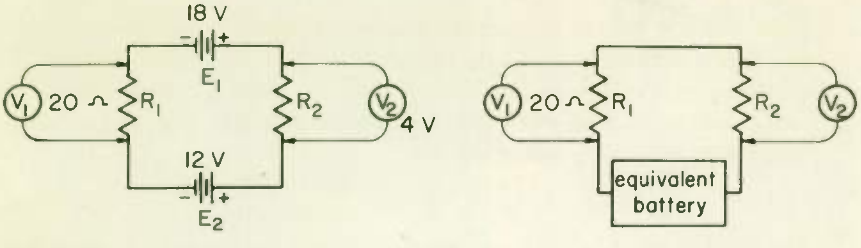

(a) (b)

Fig. 56

20. In which direction is the current flowing around the circuit of Fig. 56(a)?
    (1) Clockwise [✓ (2) Counterclockwise]

21. What is the polarity of the voltage across R_2 in Fig. 56(a)?
    [✓ (1) Upper end of R_2 positive, bottom end negative.]
    (2) Upper end of R_2 negative, bottom end positive.

22. The two batteries in Fig. 56(a) are shown replaced by an equivalent battery in Fig. 56(b). What are the voltage and polarity of the equivalent battery?
    (1) 6 V, right terminal positive
    [✓ (2) 6 V, right terminal negative]
    (3) 30 V, right terminal positive
    (4) 30 V, right terminal negative

23. What do we mean when we refer to replacing E_1 and E_2 in Fig. 56 by an equivalent battery?
    [✓ (1) The equivalent battery is one in which the voltage and polarity are such that the current value and direction and the voltmeter readings will be the same in (b) as in (a).]
    (2) The current and its direction will be the same in (b) as in (a), but the voltmeter readings may be different.

24. What is the voltage across R_1 in Fig. 56?
    [✓ (1) 2 V] (2) 4 V (3) 6 V (4) 8 V (5) 12 V (6) 15 V (7) 26 V

25. What is the circuit current in Fig. 56?
    [✓ (1) 0.1 A] (2) 0.2 A (3) 0.3 A (4) 0.6 A (5) 1.5 A

26. What is the resistance of R_2 in Fig. 56?
    (1) 0.4 Ω (2) 10 Ω (3) 20 Ω [✓ (4) 40 Ω] (5) 80 Ω

END OF EXAM

.3683

84 ⟌31.000

252

580

510

700

672

280

.368 ⟌1000

736

2640

2576

640

368

2720

272


CLEVELAND INSTITUTE OF ELECTRONICS

CLEVELAND INSTITUTE OF ELECTRONICS / CLEVELAND, OHIO

electronics

CLEVELAND INSTITUTE OF ELECTRONICS / CLEVELAND, OHIO

Voltage, Current, and Resistance in D-C Circuits

2324-1

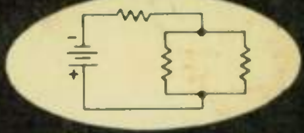

An AUTO-PROGRAMMED Lesson

ABOUT THE AUTHOR

Through nearly 20 years experience in helping students learn through home study, Mr. Geiger has obtained an intimate understanding of the problems facing home-study students. He has used this knowledge to make many improvements in our teaching methods. Mr. Geiger believes that students learn fastest when they actively participate in the lesson, rather than just reading it.

Mr. Geiger edits much of our new lesson material, polishing up the manuscripts we receive from subject-matter experts so that they are easily readable, contain only training useful to the student in practical work, and are written so as to teach, rather than merely presenting information.

Mr. Geiger's book, *Successful Preparation for FCC License Examinations* (published by Prentice-Hall), was chosen by the American Institute of Graphic Arts as one of the outstanding textbooks of the year.

This is an AUTO-PROGRAMMED Lesson exclusive with the Cleveland Institute of Electronics. It is your assurance of the finest in technical education and training.

**Registered Trademark*

NHSC

Accredited by the Accrediting Commission of the National Home Study Council

The Accrediting Commission has been approved by the U.S. Office of Education as a "nationally recognized accrediting agency".

CLEVELAND INSTITUTE OF ELECTRONICS

Voltage, Current, and Resistance in D-C Circuits

By DARRELL GEIGER
Senior Project Director
Cleveland Institute of Electronics

2324-1

In this lesson you will learn...

Frontispiece: *Automatic inspection of deposited carbon resistors. Defective units are automatically rejected.* Photo: Courtesy: Western Electric Co.

FIRST EDITION/Second Printing/November, 1967.

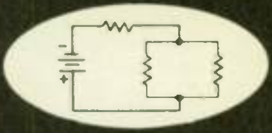

A chat with your instructor

You have already learned the relationship between voltage, current, and resistance in series and in parallel circuits. In this lesson we continue to explore this relationship, particularly as it applies to circuits made up of a combination of series and parallel circuits.

One of the important purposes of this lesson is to give you a better understanding of the meaning of *voltage* or *potential*. You need this extra training because it is not as easy to understand voltage as it is to understand current and resistance. "Voltage" is surely the term most used in electricity and electronics, and so you can see that the better you understand it, the easier electronics will be for you.

Since this lesson is a continuation of the study of d-c circuits started in Lesson 2323, you may need to review that lesson either before starting this one or while studying it.

When you have finished this lesson, your study of d-c circuit theory will be complete and you will be ready for new areas of learning in electronics.

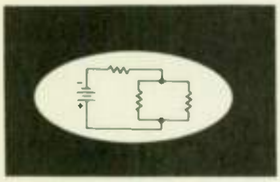

Voltage, Current, and Resistance in D-C Circuits

SERIES-PARALLEL CIRCUITS

You have learned how to figure voltage, current, and resistance values associated with series circuits and with parallel circuits. Very often a circuit is neither all series nor all parallel, but is a combination of the two.

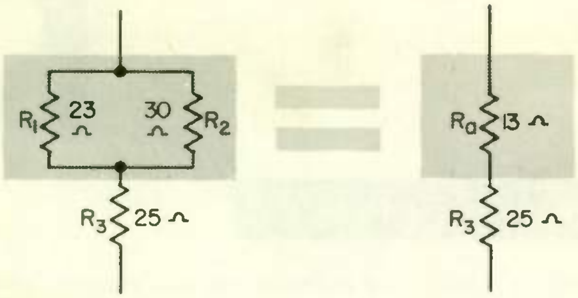

(a) A series-parallel circuit

(b) Equivalent circuit; R_a is the combined resistance of R_1 and R_2

Fig. 1. A series-parallel circuit and its equivalent circuit.

If you go about it right, analyzing such circuits is nearly as easy as analyzing simple series or parallel circuits, although more steps are required. The proper procedure is to progressively simplify the circuit by replacing the series and parallel branches within the complex circuit with equivalent values.

1 SERIES-PARALLEL CIRCUIT WITH RESISTANCE VALUES GIVEN . . . Figure 1(a) shows a series-parallel circuit. Resistor R_1 and R_2 are connected in parallel, and this combination is connected in series with R_3. To find the total resistance of the circuit, first find the combined resistance of R_1 and R_2, shown in Fig. 1(b) as R_a and then find the total series resistance of R_a plus R_3.

EXAMPLE 1 . . . In Fig. 1(a), if R_1 is 23 Ω (ohms), R_2 is 30 Ω and R_3 is 25 Ω, the total resistance of the circuit is ______ ohms.

SOLUTION . . .

$$R_a = \frac{R_1 R_2}{R_1 + R_2} = \frac{23 \times 30}{23 + 30} = \frac{690}{53} = 13\,\Omega$$

$$R_a + R_3 = 13\Omega + 25\Omega = 38\Omega, \textit{ans.}$$

EXAMPLE 2 . . . In Fig. 2(a) the total current I_t is (a) ______ amperes, voltmeter V_{12} reads (b) ______ volts, voltmeter V_3 reads (c) ______ volts, the voltage across R_1 is (d) ______ volts, and the voltage across R_2 is (e) ______ volts. The current I_1 through resistor R_1 is (f) ______ amperes, and current I_2 is (g) ______ amperes.

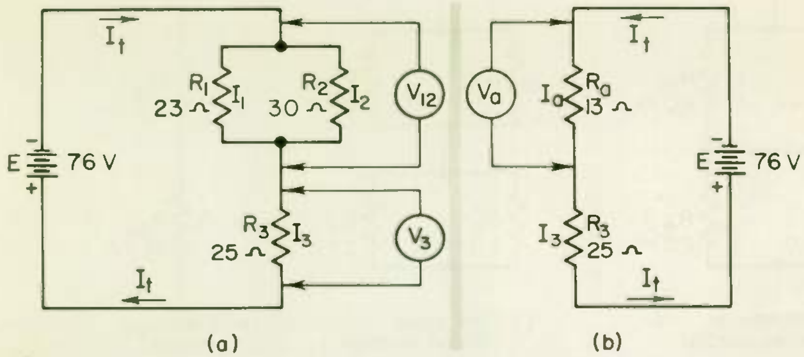

Fig. 2 Voltmeters V_{12} and V_a read the same because the two circuits are equivalent with R_a equal to R_1 and R_2 combined.

SOLUTION . . . The resistance values are the same as in Example 1, where the total resistance was found to be 38 Ω.

(a) Total current $I_t = \dfrac{\text{supply voltage } E}{\text{total resistance}} = \dfrac{76 \text{ V}}{38\ \Omega} = 2$ A, *ans.*

(b) Figure 2(b) shows the circuit equivalent to the circuit shown in Fig. 2(a). Now, R_a is equal in value to R_1 and R_2 combined, and so voltmeters V_{12} and V_a will read the same, since they are across equivalent values. By Ohm's law, the voltage E_a, which is the reading of V_a, is

$$E_a = I_a \times R_a = 2 \text{ A} \times 13\ \Omega = 26 \text{ V}, \textit{ans.}$$

(c) E_3, the voltage across R_3 is

$$E_3 = I_3 \times R_3 = 2 \text{ A} \times 25\ \Omega = 50 \text{ V}, \textit{ans.}$$

CHECK . . . By Kirchhoff's voltage law the sum of the voltage across R_a and R_3 should equal the supply voltage:

$$E_a + E_3 = 26 \text{ V} + 50 \text{ V} = 76 \text{ V}, \text{ which is the supply voltage.}$$

(d), (e) The reading of V_{12} is the voltage across R_1 and is also the voltage across R_2. Hence, the voltage across each is 26 V, *ans.*

(f) Since the voltage across R_1 is 26 V, the current through R_1 is

$$I_1 = \frac{E_1}{R_1} = \frac{26 \text{ V}}{23\ \Omega} = 1.13 \text{ A}, \textit{ans.}$$

(g) $I_2 = \dfrac{E_2}{R_2} = \dfrac{26 \text{ V}}{30\ \Omega} = 0.87$ A, *ans.*

CHECK . . . By Kirchhoff's current law, the total current I_t should equal the sum of the currents in the parallel branches:

$$I_1 + I_2 = 1.13 \text{ A} + 0.87 \text{ A} = 2 \text{ A}$$

which is the same as I_t.

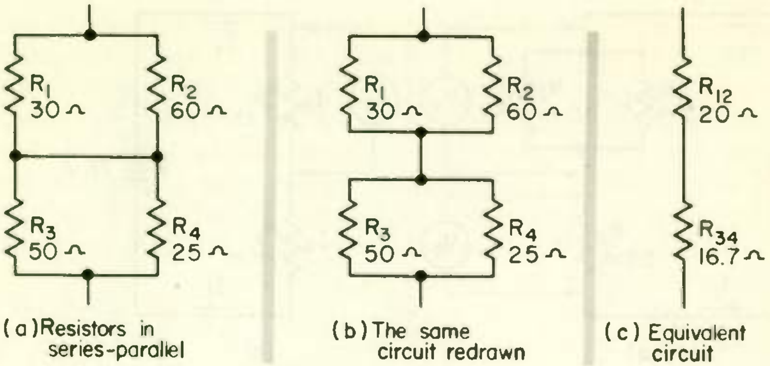

(a) Resistors in series-parallel (b) The same circuit redrawn (c) Equivalent circuit

Fig. 3 Four resistors in series-parallel. In the equivalent circuit, R_{12} is the combined resistance of R_1 and R_2 and R_{34} is the combined resistance of R_3 and R_4.

A summary of the proper use of Ohm's law will be useful. You have seen that Ohm's law can be used for parts of a circuit as well as for the entire circuit. The important thing to remember when applying Ohm's law to a part of a circuit is that the voltage, current, and resistance used with the formula must be the voltage across that part of the circuit, the current through that part of the circuit, and the resistance of that part of the circuit. For example, in finding I_1, the current through R_1 in part (f) of Example 2, we used the voltage across R_1 and the resistance of R_1.

2 HINTS ON SOLVING SERIES-PARALLEL CIRCUITS . . . Sometimes the easiest way to analyze a series-parallel circuit is to redraw it. For example, the circuit shown in Fig. 3(a) contains four resistors in series-parallel. The circuit is redrawn in Fig. 3(b). Resistors R_1 and R_2 are in parallel, and resistors R_3 and R_4 are also in parallel. The two parallel combinations are connected together in series.

To solve for the total resistance of such a circuit, first solve for the resistance of each parallel combination and then solve for the resistance of the series combination.

EXAMPLE 1 . . . In Fig. 3(a), if $R_1 = 30\ \Omega$, $R_2 = 60\ \Omega$, $R_3 = 50\ \Omega$, and $R_4 = 25\ \Omega$, the total resistance of the circuit is ________ ohms.

SOLUTION . . . The combined resistance R_{12} of R_1 and R_2 can be found by using the formula, $R_{12} = \dfrac{R_1R_2}{R_1 + R_2} = \dfrac{30 \times 60}{30 + 60} = \dfrac{1800}{90} = 20\ \Omega$. Similarly, the value R_{34} of R_3 and R_4 in parallel is $16.7\ \Omega$. Thus, in Fig. 3(c), $R_{12} = 20\ \Omega$ and $R_{34} = 16.7\ \Omega$. The total circuit resistance is $20\ \Omega + 16.7\ \Omega = 36.7\ \Omega$, *ans.*

In the example on page 2 you were required to find all the currents and voltages associated with the circuit. Often you will be asked to find just a single voltage or current at some point in the circuit. The beginner is apt to find such a problem more difficult than if he were asked to find all the voltage and current values. The reason is that he looks for some shortcut way to find the value asked for without bothering to find the voltages and currents that the problem does *not* ask for. When finding a specific voltage or current in a series-parallel circuit, it is generally necessary to also find most of the other voltages and currents. Whether absolutely necessary or not, doing so makes it possible to use Kirchhoff's voltage and current laws to check your work.

In working a series-parallel circuit, don't pay much attention at first to the specific current or voltage that is asked for. Instead, study the circuit to see what voltage or current you can readily find. After you find that value, mark it on your circuit drawing. This gives you more information on the drawing, so that you will be able to see some other value that can be found easily. By proceeding in this way, you will soon have all the voltage and current values, and thus you will have the value asked for in the problem.

Don't forget to use equivalent circuits where they are applicable, because they can often make the hardest-looking circuit really simple. After you have found all circuit values, it is important that you check them for consistency by using Kirchhoff's voltage and current laws or by some other way that is suitable for the problem.

EXAMPLE 2 . . . Find the current I_4 through R_4 in Fig. 4.

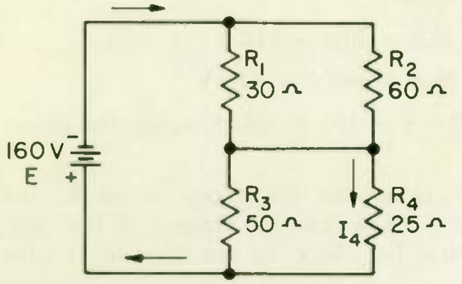

Fig. 4 Circuit of Fig. 3 with a voltage source added.

SOLUTION . . . Find all current and voltage values. Then you will have I_4 and will also be able to check your work. The combined resistance and equivalent circuits have already been found in Example 1, so the next step is to find the total current I:

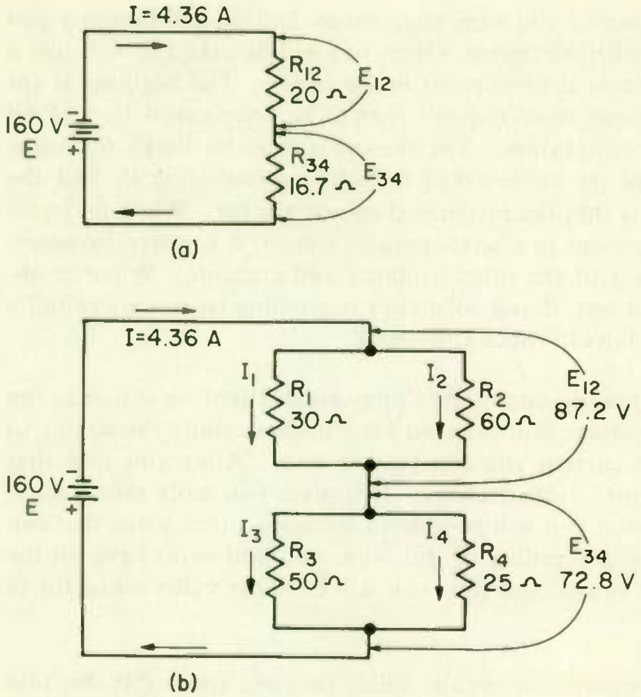

Fig. 5 Steps in the solution to the circuit of Fig. 4.

$$I = \frac{E}{R_t} = \frac{160\ \text{V}}{36.7\ \Omega} = 4.36\ \text{A}$$

This value of I has been marked on the equivalent circuit shown in Fig. 5(a). The voltages across R_{12} and R_{34} can now be found:

$$E_{12} = I \times R_{12} = 4.36\ \text{A} \times 20\ \Omega = 87.2\ \text{V}$$

$$E_{34} = I \times R_{34} = 4.36\ \text{A} \times 16.7\ \Omega = 72.8\ \text{V}$$

CHECK . . . $E_{12} + E_{34} = 87.2\ \text{V} + 72.8\ \text{V} = 160\ \text{V}$, which equals the supply voltage.

Since R_{12} is equivalent to R_1 and R_2 in parallel, the voltage across R_1 and R_2 is E_{12}, the voltage across R_{12}. We can now draw the diagram of Fig. 5(b), showing all currents and voltages known so far. Since this new diagram gives the voltages across R_1, R_2, R_3, and R_4, the current through each of these resistors can now be found.

$$I_1 = \frac{E_1}{R_1} = \frac{E_{12}}{R_1} = \frac{87.2\ \text{V}}{30\ \Omega} = 2.91\ \text{A}$$

$$I_2 = \frac{E_2}{R_2} = \frac{E_{12}}{R_2} = \frac{87.2\ \text{V}}{60\ \Omega} = 1.45\ \text{A}$$

$$I_3 = \frac{E_3}{R_3} = \frac{E_{34}}{R_3} = \frac{72.8\ \text{V}}{50\ \Omega} = 1.46\ \text{A}$$

$$I_4 = \frac{E_4}{R_4} = \frac{E_{34}}{R_4} = \frac{72.8\ \text{V}}{25\ \Omega} = 2.91\ \text{A}, \textit{ans.}$$

CHECK . . . Notice that the current from the negative side of the battery divides upon reaching R_1 and R_2, Fig. 5(b), part of the current going through R_1 and part through R_2. Hence, the sum of I_1 and I_2 should equal the current coming from the battery. Similarly, the sum of I_3 and I_4 should equal the battery current.

$$I_1 + I_2 = 2.91\ \text{A} + 1.45\ \text{A} = 4.36\ \text{A} = I$$

$$I_3 + I_4 = 1.46\ \text{A} + 2.91\ \text{A} = 4.37\ \text{A} = I, \text{approximately}$$

The reason that I_3 and I_4 do not exactly add up to 4.36 A, the value of I, is that slight errors are made in rounding off values to three significant figures while working the problem. A slight discrepancy in the third significant figure often occurs in checking.

WHAT HAVE YOU LEARNED?

1. It is desired to operate two 6.3-V filaments in series. One filament requires 0.3 A, and the other requires 0.4 A. Would the two filaments operate properly in series across 12.6 V? (a) No The resistance of the first filament is (b) 21 ohms; that of the second is (c) 15.75 ohms. The total resistance of the two in series is (d) 36.75 ohms. When the two filaments are connected across 12.6 V, the current through them is (e) .342 amperes. By Ohm's law, the voltage across the first filament is (f) ~~[illegible]~~ 7.18 volts and that across the second is (g) ~~[illegible]~~ 5.4 volts. To make these filaments operate correctly, a resistor can be placed in parallel with one filament as shown in Fig. 6. The resistor must draw (h) .1 amp at 6.3 (i) ~~[illegible]~~ volts. Therefore, the value of the resistor should be (j) 63 Ω ohms.

0.3678
34.25/12.60000
10275
23250
20550
27000
23975
30250
27400

6.3
.3
21 Ω

12.25
.4
.163

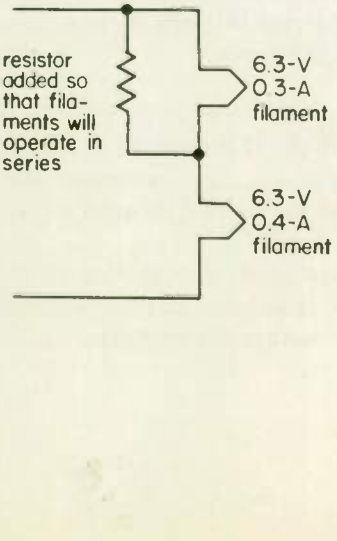

21
.348
336
756
7.128

Fig. 6

15.75
.368
10400
7950
3975
4.81100

5.1
.1

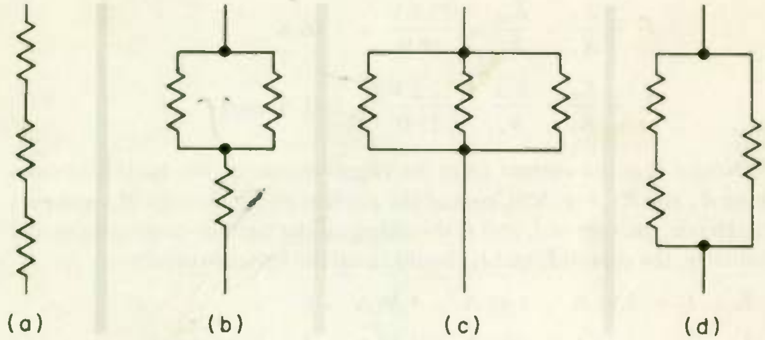

Fig. 7

2. If several vacuum-tube filaments are to be operated in parallel conveniently, each of them must require the same (a) VOLTAGE. To be operated in series, each of them should require the same (b) CURRENT.

3. Four methods of connecting three resistors for different total resistance are shown in Fig. 7. Suppose all resistors are 100 Ω. The total resistance in Fig. 7(a) is (a) 300 ohms; that in Fig. 7(b) is (b) 150 ohms; that in Fig. 7(c) is (c) 33⅓ ohms; and that in Fig. 7(d) is (d) 67⅔ ohms. Thus to connect three resistors of equal value in such a way that the total resistance is one-third the resistance of one of them, you would connect them as shown in (e) 7C; if one and one-half times the value of one, as shown in (f) 7B; if two-thirds the value of one, as shown in (g) 7d; and if three times the value of one, as shown in (h) 7A.

4. Suppose, in Fig. 1(a), that the values of R_1, R_2, and R_3 are 14, 18, and 22 Ω, respectively. Suppose also that this series-parallel circuit is connected to a 90-V source. The combined resistance of R_1 and R_2 is (a) 8 ohms. The combined resistance of R_1, R_2, and R_3 is (b) 30 ohms. The 90-V source supplies (c) 3 amperes to the circuit. The current through R_3 is (d) 3 amperes. The voltage drop across R_3 is (e) 88.912 volts; that across R_1 is (f) 1.088 volts; and that across R_2 is (g) 1.088 volts. The current through R_1 is (h) 1.5 amperes, and that through R_2 is (i) 1.5 amperes.

32
6
192
224
256

4/11 4
.272
1.5 000

5. Suppose, in Fig. 1(a), the value of R_1 is 27 Ω, the value of R_2 is 34 Ω, and the value of R_3 is 58 Ω. If the circuit is connected to a 100-V source, the current through R_3 is (a) ______ amperes, the current through R_1 is (b) ______ amperes, and the current through R_2 is (c) ______ amperes.

6. In Fig. 1(a) the value of R_1 is 5 Ω, that of R_2 is 20 Ω, and that of R_3 is 6 Ω. The circuit is connected to a voltage source. The current through R_1 is 3 A. The voltage across R_1 is (a) ______ volts, and the volt-

age across R_2 is (b) ______ volts. The current through R_2 is (c) ______ amperes, and the current through R_3 is (d) ______ amperes. The voltage across R_3 is (e) ______ volts. The source voltage is (f) ______ volts.

7. In Fig. 1(a), R_1 is 240 Ω, R_2 is 80 Ω, and R_3 is 650 Ω. The circuit is connected to a voltage source. The current through R_1 is 30 mA or (a) ______ amperes; the current through R_2 is (b) ______ milliamperes; and the current through R_3 is (c) ______ milliamperes. The voltage across R_1 is (d) ______ volts; that across R_2 is (e) ______ volts; and that across R_3 is (f) ______ volts.

8. Suppose that a resistor of 32 Ω is in parallel with a resistor of 36 Ω and that a 54-Ω resistor is in series with the pair. When 350 V is applied to the combination, the current through the 54-Ω resistor is (a) ______ amperes and the voltage drop across the 54-Ω resistor is (b) ______ volts.

9. A 242-Ω resistor is in parallel with a 180-Ω resistor, and 420-Ω resistor is in series with the combination. A current of 22 mA flows through the 242-Ω resistor. The current through the 180-Ω resistor is ______ milliamperes.

10. Two 24-Ω resistors are in parallel, and a 42-Ω resistor is in series with the combination. When 78 V is applied to the three resistors so connected, the voltage drop across the 42-Ω resistor is ______ volts.

11. A 19-Ω resistor is in parallel with an 18-Ω resistor, and in series with the two is a 14-Ω resistor. When 70 V is applied to this combination, the current through the 19-Ω resistor is ______ amperes.

ANSWERS

1. (a) No . . . One filament requires more current than the other. If the two filaments were connected in series, the current would have to be the same in both.

(b) 21 . . . Of course we use Ohm's law, $R = \frac{E}{I}$, to find the resistance. Since the resistance of the first filament is wanted, make sure that the value you use for E in the formula is the voltage across the first filament (6.3 V) and that the value you use for I is the current required by the first filament (0.3 A). So,

$$R = \frac{E}{I} = \frac{6.3\ \text{V}}{0.3\ \text{A}} = 21\ \Omega.$$

(c) 15.75 . . . You may prefer to round this off to three significant figures and call it 15.7 or 15.8 Ω, and it is OK to do so. However, when the first significant figure is a 1, you will increase your accuracy a little if you keep four significant figures. But as long as you keep at least three significant figures, your answer will be accurate enough for practical purposes, and it would never be considered wrong.

(d) 36.8 . . . 21 Ω + 15.75 Ω = 36.75 Ω. Now, you can use this value if you want to, but you will save yourself some work in the following steps if you round it off to three significant figures, which would make it 36.7 or 36.8. Of course, this will make your final answer less accurate, but the difference is so slight that it is not worth the extra work of using four significant figures. There is nothing wrong with using 36.75, but only a beginner would use it.

(e) 0.342 . . . We want to find the current through the two filaments if connected in series, and the formula to use is $I = \frac{E}{R}$. The voltage to use in this formula is 12.6 V, since that is the voltage across the two filaments in series. Now, since we use for E the voltage across the two filaments, we must use for R the resistance of the two filaments, which from part (d) is 36.8 Ω. Never forget that the values you use for both E and R must refer to the same part of the circuit. For example, if you use for E the voltage across both filaments, you can't use the resistance of only one of the filaments for R. Remembering this will spare you a lot of mistakes in using Ohm's law. $I = \frac{E}{R} = \frac{12.6\text{ V}}{36.8\ \Omega} = 0.342\text{ A}$. If you use 36.7 or 36.75 for R, you will get 0.343 A, and that answer is just as good as 0.342. Two persons won't generally get exactly the same answer to a problem with several steps, because they will not round off in the same manner as they go. Consequently, don't expect the answers you get to agree exactly with our answers, although they should be close to ours.

(f) 7.18 . . . In using the formula $E = IR$, keep in mind that you can't use just any values for I and R. We want to find the voltage across the *first filament*. That means we must use for I the current through the *first filament*, 0.342 A, and we must use for R the resistance of the *first filament*, 21 Ω. $E = IR = 0.342 \times 21 = 7.18$ V. Now maybe you got 7.16, 7.17, or 7.19 V because you rounded off a little differently and so used a slightly different value for I. If so, don't let that worry you. Those values are all close enough that any of them can be considered as correct. When you went to school, you may have learned that if, say 86.5 was the book answer, then 86.4 or any other close-by value was dead wrong. As engineers see it, all answers near 86.5 (say, 86.3, 86.4, 86.6, and 86.7) are equally correct. Until you start thinking like engineers about this matter, you are going to waste a great deal of time trying to get your answer to jibe exactly with the book answers.

(g) 5.4 . . . Because the voltage across this filament is less than the 6.3 V required for proper operation, the filament will not reach a high enough temperature, and as a result the tube will work poorly. You found in part (f) that the first filament has 7.18 V across it. Thus the first filament will get too hot and eventually burn out.

(h) 0.1 . . . Looking at Fig. 6 we see that our basic problem is that the lower filament needs 0.4 A for proper operation, while the upper filament only needs 0.3 A. We can lick this problem by connecting a resistor as shown across the upper filament and giving it the proper resistance value for it to draw 0.1 A. The resistor and the upper filament together use 0.3 A + 0.1 A = 0.4 A. Thus they can be used properly in series with the lower filament, since the current requirements are now the same. Remember that current flow is similar to water flow. Suppose the lower filament was a water pipe that could carry 0.4 gal of water per minute and that the upper filament was a pipe that could carry only 0.3 gal per min. In order to keep the flow of water (current) through the lower pipe at 0.4 gal per min, we would have to put an additional pipe across the first one to carry the additional 0.1 gal per min. All of the water through the first two pipes would then flow through the lower pipe. Similarly, all of the current through the two upper resistances must flow through the lower resistance.

(i) 6.3 . . . The voltage across the resistor will be the same as the voltage across the filament because the two are in parallel. Using the resistor has equalized the voltages across the filaments, so that each is 6.3 V.

(j) 63 . . . $R = \frac{E}{I} = \frac{6.3}{0.1} = 63\ \Omega$. Remember that to find the current through the resistor R, we must use for I in the formula the current through R. Don't use 0.3 A or 0.4 A for I, because the current through the resistor is 0.1 A.

2. (a) Voltage; (b) current

3. (a) 300; (b) 150; (c) 33.3; (d) 66.7; (e) c; (f) b; (g) d; (h) a

4. (a) 7.88; (b) 29.9; (c) 3.01; (d) 3.01; (e) 66.2; (f) 23.8; (g) 23.8; (h) 1.70

(i) 1.32 . . . The circuit of Fig. 8(a) is as described in Problem 4. To find the combined resistance of R_1 and R_2 in parallel, we have

$$R_e = \frac{R_1 \times R_2}{R_1 + R_2} = \frac{14 \times 18}{14 + 18} = 7.88\ \Omega$$

where R_e is the equivalent resistance of the two. We can now draw the equivalent circuit, replacing the parallel combination of R_1 and R_2 with a single resistor of 7.88 Ω, as shown in Fig. 8(b). Since R_e is in series with R_3, the combined resistance is $R_t = R_e + R_3 = 7.88 + 22 = 29.9\ \Omega$, where R_t is the total resistance of the circuit. To find the current supplied by the source, we use Ohm's law: $I = E/R_t = 90/29.9 = 3.01$ A. The current through R_3 is, of course, the total current from the source, that is, 3.01 A. The voltage drop across R_3 is determined by Ohm's law to be $E = IR_3 = 3.01 \times 22 = 66.2$ V. The voltage drops across R_1 and R_2 are equal because the two resistors are in parallel, and they can be found by subtracting the drop across R_3 from the source voltage: $90 - 66.2 = 23.8$ V. Finally, by using the voltage drop across each resistor, we can compute the current through each. $I_1 = E_1/R_1 = 23.8/14 = 1.70$ A. $I_2 = E_2/R_2 = 23.8/18 = 1.32$ A.

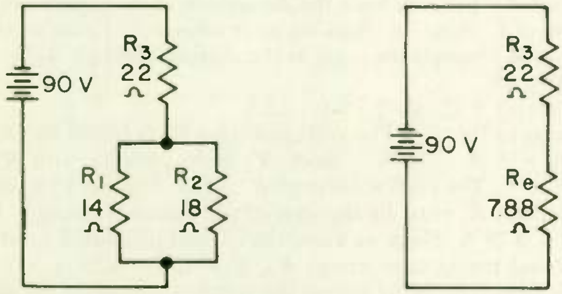

Fig. 8

5. (a) 1.37 (b) 0.763 (c) 0.606 . . . The first thing to do when a circuit is involved is to draw the circuit. Then add to the drawing all pertinent data that are given. This is shown in Fig. 9. There are various ways to do this problem; only one way will be shown. Find the equivalent resistance of R_1 and R_2:

$$R_e = \frac{R_1 \times R_2}{R_1 + R_2} = \frac{27 \times 34}{27 + 34} = 15.05\ \Omega$$

$R_t = 15.05\ \Omega + 58\ \Omega = 73.05\ \Omega$, or 73.0 to three significant figures. Next, find the total current through the circuit. To do this, divide the total voltage by the total resistance:

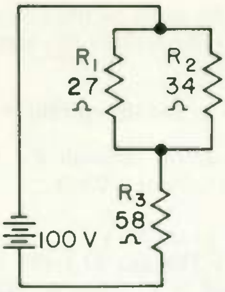

Fig. 9

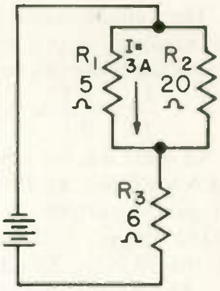

Fig. 10

$$I_t = \frac{100\ \text{V}}{73\ \Omega} = 1.37\ \text{A}$$

Now find the voltage across the parallel combination. The total current is flowing through R_3. The voltage drop across R_3 is $E = 1.37\ \text{A} \times 58\ \Omega = 79.4\ \text{V}$. Hence, the voltage across the parallel combination is $100\ \text{V} - 79.4\ \text{V} = 20.6\ \text{V}$. The current through the resistors is then

$$I_{R_1} = \frac{20.6\ \text{V}}{27\ \Omega} = 0.763\ \text{A} \qquad \text{and} \qquad I_{R_2} = \frac{20.6\ \text{V}}{34\ \Omega} = 0.606\ \text{A}$$

As a check, the sum of the currents through R_1 and R_2 should equal the current through R_3: $0.763\ \text{A} + 0.606\ \text{A} = 1.369\ \text{A}$. Rounded off to three significant figures, this becomes 1.37 A, which is the same as the value found above for I_t. Since it is not likely that you rounded off exactly as we did at every step in the solution, your figures may vary slightly from our figures above. Don't waste time worrying about that. Instead, heed the discussion about significant figures in the answer to Problem 1. Also, in checking your answer, the sum of the two branch currents may not be precisely the same as the current through R_3 because of slight errors in rounding off.

6. (a) 15; (b) 15; (c) 0.75; (d) 3.75; (e) 22.5
(f) 37.5 . . . Refer to Fig. 10. The voltage across R_1 is found by Ohm's law to be $E = IR = 3\ \text{A} \times 5\ \Omega = 15\ \text{V}$. Since R_2 is in parallel with R_1, the voltage across it is also 15 V. The current through R_2 is $I = E/R = 15\ \text{V}/20\ \Omega = 0.75\ \text{A}$. The current through R_3 must be the sum of the currents through R_1 and R_2, or $3\ \text{A} + 0.75\ \text{A} = 3.75\ \text{A}$. Since we know the current through R_3 and the resistance of R_3, we can find the voltage across R_3, $E = IR = 3.75\ \text{A} \times 6\ \Omega = 22.5\ \text{V}$. Finally, the source voltage is the sum of the voltages across the parallel branch and the series branch, or $15\ \text{V} + 22.5\ \text{V} = 37.5\ \text{V}$.

7. (a) 0.03; (b) 90; (c) 120; (d) 7.2; (e) 7.2; (f) 78   8. (a) 4.94; (b) 267

9. 29.6 . . . Refer to Fig. 11. First find the voltage drop across the 242-Ω resistor. $E = IR = 0.022\ \text{A} \times 242\ \Omega = 5.324\ \text{V}$. The same voltage must appear across the 180-Ω resistor, so the current through the 180-Ω resistor is $I = E/R = 5.324\ \text{V}/180\ \Omega = 0.0296\ \text{A}$. In this problem we do not have to consider the value of the series resistor, because we know the voltage across the resistor in parallel with the 180-Ω resistor.

10. 60.5   11. 1.46 . . . See Fig. 12:

$$R = \frac{19 \times 18}{19 + 18} = 9.243\ \Omega \qquad R_t = 14\ \Omega + 9.243\ \Omega = 23.243\ \Omega$$

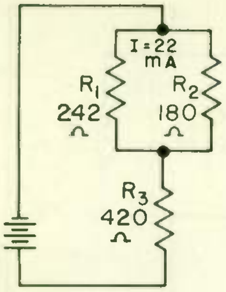

Fig. 11

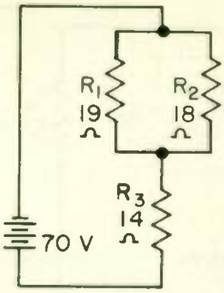

Fig. 12

$$I_t = \frac{70\text{ V}}{23.24\ \Omega} = 3.012\text{ A}$$

Voltage drop across the 14-Ω resistor is

$$E = 3.012\text{ A} \times 14\ \Omega = 42.168\text{ V}$$

Voltage drop across the parallel resistor is

$$E = 70\text{ V} - 42.170\text{ V} = 27.830\text{ V}$$

The current through the 19-Ω resistor is

$$I = \frac{27.83\text{ V}}{19\ \Omega} = 1.46\text{ A}$$

3 SERIES-PARALLEL CIRCUITS WITH MANY COMPONENTS . . .

A series-parallel circuit can have more branches than the circuits we have studied so far, but it is worked by the same general method. The following examples will illustrate the procedure.

EXAMPLE 1 . . . What is the combined resistance of the network of Fig. 13?

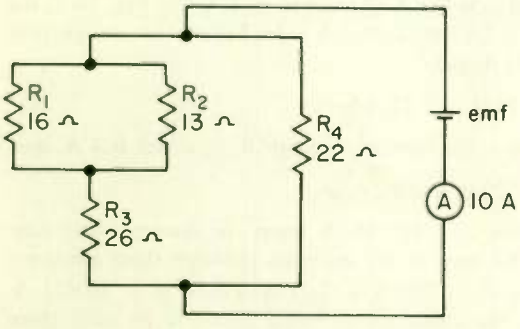

Fig. 13 Diagram of four-component series-parallel circuit.

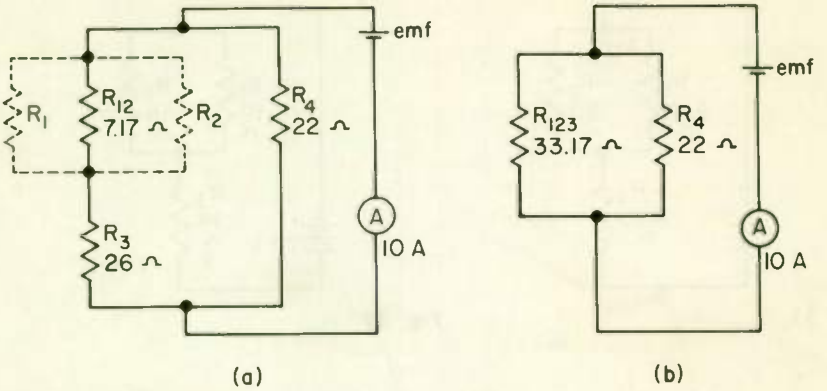

Fig. 14 Equivalent circuits for Fig. 13.

SOLUTION . . . Since R_1 and R_2 are in parallel with each other, their combined resistance is

$$R_{12} = \frac{R_1 R_2}{R_1 + R_2} = \frac{16 \times 13}{16 + 13} = 7.17\,\Omega$$

In Fig. 14(a) the circuit is redrawn with R_1 and R_2 replaced by the equivalent resistor R_{12}. R_{12} is seen to be in series with R_3, so that the combined resistance of these two is 7.17 Ω + 26 Ω = 33.17 Ω. An equivalent circuit is again drawn [see Fig. 14(b)]; in it R_{123} replaces R_{12} and R_3 in Fig. 14(a). Figure 14(b) is a simple parallel circuit the combined resistance of which is

$$R = \frac{R_{123} R_4}{R_{123} + R_4} = \frac{33.17 \times 22}{33.17 + 22} = 13.23\,\Omega, \textit{ans.}$$

EXAMPLE 2 . . . In Fig. 13 the total current flowing through the combination, as shown by the ammeter *A*, is 10 A. How much is the impressed voltage, emf? What is the current through R_1? Through R_2? Through R_3? Through R_4? What is the voltage drop across R_1? Across R_3?

SOLUTION . . . The combined resistance from Example 1 is 13.23 Ω, and since the current is 10 A, the impressed voltage is 10 A × 13.23 Ω = 132.3 V, *ans.*

In Fig. 14(b) the current through R_{123} is 132.3 V/33.17 Ω = 4 A. In Fig. 14(a) the voltage drop across R_{12} is 4 A × 7.17 Ω = 28.7 V. In Figure 13 the current through R_1 is 28.7 V/16 Ω = 1.793 A, *ans.*

The current through R_2 is 28.7 V/13 Ω = 2.21 A, *ans.*

The current through R_3 is the same as the current through R_{123}, which is 4 A, *ans.*

The current through R_4 is 132.3 V/22 Ω = 6.02 A, *ans.*

CHECK ON CURRENT DISTRIBUTION . . . The 10 A from the source must pass through R_1, R_2, or R_4. Hence, the sum of the currents through these three resistors should equal the total current. 1.793 A + 2.21 A + 6.02 A = 10.023 A. The slight discrepancy is due to the calculations being accurate to only three significant figures.

The voltage across R_1 is 1.793 A × 16 Ω = 28.7 V, *ans.*

The voltage across R_2 is 2.21 A × 13 Ω = 28.7 V. (This is a check on E_1, since E_1 and E_2 should be equal).

The voltage across R_3 is 4 A × 26 Ω = 104 V, *ans.*

VOLTAGE CHECK . . . The voltage across R_1 plus the voltage across R_3 should equal the impressed voltage. 28.7 V + 104 V = 132.7 V. This is close enough to verify the accuracy of the computations.

WHAT HAVE YOU LEARNED?

1. Two resistances of 28 and 25 Ω are connected in parallel; in series with this combination is connected a 38-Ω resistance; in parallel with this total combination is connected a 24-Ω resistance. The total current flowing through the combination is 75 mA. What is the current value in the 25-Ω resistance?

ANSWERS

1. 12.6 mA . . . Figure 15 shows the progressive steps in working the problem. Part (a) shows the circuit. In parts (b), (c), and (d) the components are combined to form simpler and simpler equivalent circuits until in (d) the entire resistance network is reduced to the single equivalent 16.34-Ω resistance. Now

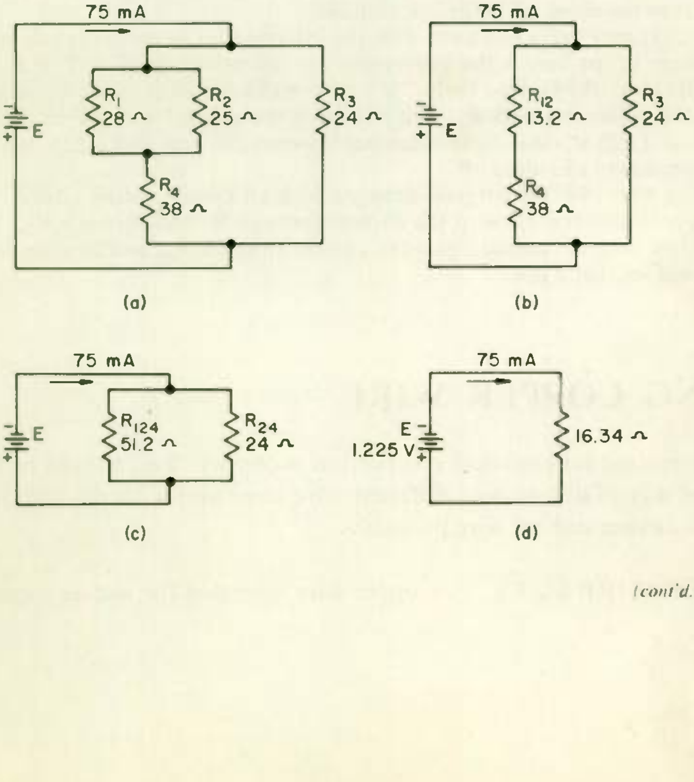

Fig. 15

(cont'd. on p. 16)

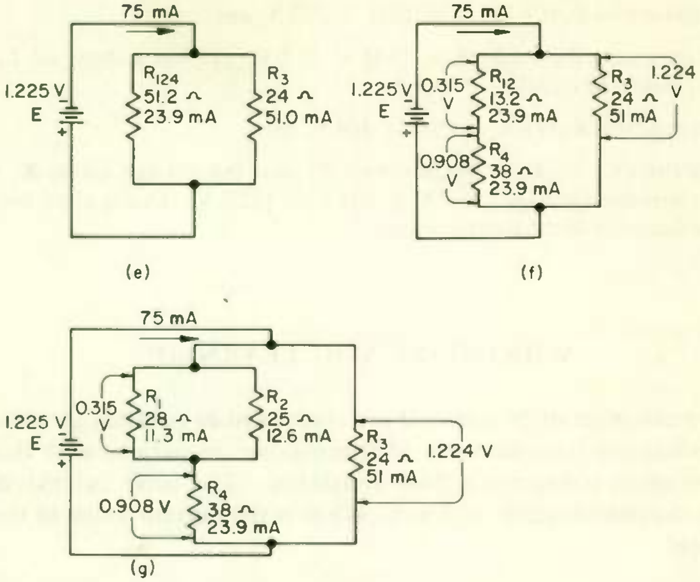

Fig. 15

Ohm's law can be used to find the battery E voltage to be 1.225 V. Part (e) is part (c) redrawn, but since E is now known, the currents through R_{124} and R_3 can now be found, and they are as shown. At this point make your first check by adding the two branch currents: 23.9 mA + 51.0 mA = 74.9 mA. Although this sum does not exactly equal the total current of 75 mA, it is close enough. The discrepancy results from rounding off in the calculations.

In Fig. 15(f) part (b) is redrawn, with the information in parts (d) and (e) added. The voltage drops across the resistances are calculated by $E = I \times R$, and the results are as marked on the figure. We now make our next check by seeing if the sum of the voltages across R_{12} and R_4 equals the applied voltage E. 0.315 V + 0.908 V = 1.223 V. The slight difference between this sum and 1.225, the value of E, is again due to rounding off.

Part (g) of Fig. 15 is the original drawing with all known values added. All that remains is to find the value of the current through R_1 and through R_2. The sum of these two currents should equal the current through R_4, and as your last check you should see that it does.

USING COPPER WIRE

Most wire used for electrical conduction is copper. You should be familiar with the way of designating different wire sizes and with the use of a wire table to answer copper wire problems.

4 COPPER WIRE SIZES . . . Copper wire intended for use as a conductor

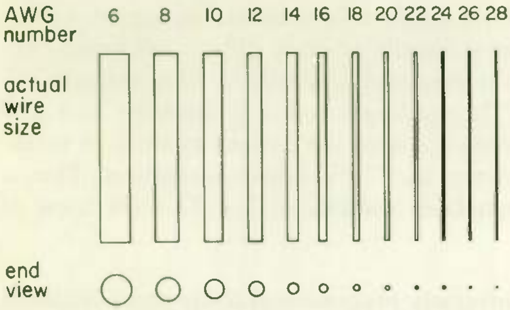

Fig. 16 Actual sizes of copper wire conductors.

is sized in accordance with American Wire Gage (AWG) numbers. Some wires used in electronics are shown in actual size in Fig. 16. Notice in particular that the larger the gage number, the smaller the wire. Although wires as small as No. 40 (0.003 in.) are commonly used in electronics, they are not shown in Fig. 16 because they are too small to distinguish in print.

A popular size of hookup wire for electronics circuitry is No. 22. It is large enough to have adequate mechanical strength and to be easy to handle. In compact transistor circuitry where space is limited, wire as small as No. 32 is used. Wire smaller than that would be too fragile for hookup or other unprotected use. Most hookup wire used today has plastic insulation.

Although No. 22 hookup wire might carry a current of an ampere or more without damage to the insulation, larger wire is often used for currents over 100 mA to keep the power and voltage loss in the wire low. Of course, the less protected the wire is the larger it must be. For example, a wire smaller than No. 18 is unsuitable for a power cord that must carry more than 3 A.

The national electric code does not allow the use of wire smaller than No. 14 for building or workshop wiring. Wire of this size should not be fused for over 15 A. Number 12 workshop wiring can be fused for 20 A, and No. 10 can be fused for 30 A. Good technicians see to it that their workship wiring is not overfused.

Wire intended for coil winding is called *magnet* wire. Since the wire is not subject to physical damage, the insulation can be thin so that it does not require excessive coil space. For insulation, magnet wire is commonly coated with either enamel or an equally thin film of some plastic material, such as polyester. Magnet wire sizes from No. 20 to No. 40 are in common use.

5 COPPER WIRE TABLE . . . Useful reference material on copper wire is given in Table 1. Wire diameter is usually given in mils, a mil being one-thousandth of an inch. Thus the diameter of a No. 18 wire, given in the table as 40.3 mils, is 0.0403 in. In winding a coil, it is necessary to know how long a winding form is needed to hold the desired number of turns. The column headed "turns per linear inch" gives this information. Thus a form 2 in. long will hold a single-layer winding of 2 × 37 = 74 turns of No. 22 enamel-covered wire.

Since the resistance of wire is inversely proportional to its cross-sectional area, the cross-sectional area of wire is of particular interest. If we double the cross-sectional area of a conductor, we halve the resistance of the conductor; if we reduce the cross-sectional area to one-third of its original value, we increase the resistance to three times its original value.

Don't confuse cross-sectional area with diameter. Two conductors are shown in Fig. 17; conductor *B* has twice the diameter of conductor *A*. But the area of the end of *B* is *four* times the area of the end of *A*. The cross-sectional area of a conductor varies with the square of the diameter. If the diameter is tripled, the area becomes nine times its previous value, etc. This is because the area of any circle is equal to one-fourth of π (pi) times the square of its diameter.

The square of the diameter of a wire in mils is called the circular-mil (CM) area of the wire. If the diamter of a wire is 42 mils, its area will

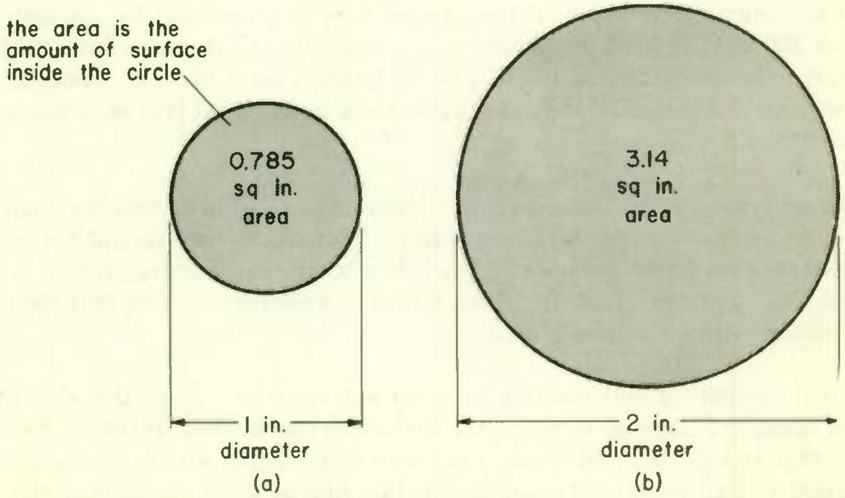

Fig. 17 Although the diameter of the circle in (b) is only twice that of the circle in (a), the area of the circle in (b) is four times that of the circle in (a).

TABLE 1

COPPER WIRE TABLE

Gage No., AWG	Diam., mils*	Circular-mil area	Turns per Linear Inch† (enamel-covered wire)	Feet per lb (bare wire)	Ohms per 1000 ft. 25 C°	Current-carrying capacity at 1500 CM per A‡
1	289.3	83690	—	3.947	0.1264	55.7
2	257.6	66370	—	4.977	.1593	44.1
3	229.4	52640	—	6.276	.2009	35.0
4	204.3	41740	—	7.914	.2533	27.7
5	181.9	33100	—	9.980	.3195	22.0
6	162.0	26250	—	12.58	.4028	17.5
7	144.3	20820	—	15.87	.5080	13.8
8	128.5	16510	7.6	20.01	.6405	11.0
9	114.4	13090	8.6	25.23	0.8077	8.7
10	101.9	10380	9.6	31.82	1.018	6.9
11	90.74	8234	10.7	40.12	1.284	5.5
12	80.81	6530	12.0	50.59	1.619	4.4
13	71.96	5178	13.5	63.80	2.042	3.5
14	64.08	4107	15.0	80.44	2.575	2.7
15	57.07	3257	16.8	101.4	3.247	2.2
16	50.82	2583	18.9	127.9	4.094	1.7
17	45.26	2048	21.2	161.3	5.163	1.3
18	40.30	1624	23.6	203.4	6.510	1.1
19	35.89	1288	26.4	256.5	8.210	0.86
20	31.96	1022	29.4	323.4	10.35	.68
21	28.46	810.1	33.1	407.8	13.05	.54
22	25.35	642.4	37.0	514.2	16.46	.43
23	22.57	509.5	41.3	648.4	20.76	.34
24	20.10	404.0	46.3	817.7	26.17	.27
25	17.90	320.4	51.7	1031	33.00	.21
26	15.94	254.1	58.0	1300	41.62	.17
27	14.20	201.5	64.9	1639	52.48	.13
28	12.64	159.8	72.7	2067	66.17	.11
29	11.26	126.7	81.6	2607	83.44	.084
30	10.03	100.5	90.5	3287	105.2	.067
31	8.928	79.70	101	4145	132.7	.053
32	7.950	63.21	113	5227	167.3	.042
33	7.080	50.13	127	6591	211.0	.033
34	6.305	39.75	143	8310	266.0	.026
35	5.615	31.52	158	10480	335.0	.021
36	5.000	25.00	175	13210	423.0	.017
37	4.453	19.83	198	16660	533.4	.013
38	3.965	15.72	224	21010	672.6	.010
39	3.531	12.47	248	26500	848.1	.008
40	3.145	9.88	282	33410	1069	0.006

* A mil is 1/1000 (one thousandth) of an inch.

† The figures given are approximate only, since the thickness of the insulation varies with the manufacturer.

‡ The current-carrying capacity at 1000 CM per ampere is equal to the circular-mil area (column 3) divided by 1000.

be 42 × 42 = 1764 CM. The resistance of a conductor is inversely proportional to its circular-mil area.

EXAMPLE . . . A certain wire with a diameter of 204 mils has a resistance of 18 Ω. What will be the resistance of another wire of the same length and of the same material, but with a diameter of 74 mils?

SOLUTION . . .

$$204^2 = 41{,}600\ \text{CM}$$

$$74^2 = 5480\ \text{CM}$$

$$\frac{41{,}600}{5480} = \frac{R}{18}$$

$$R = 136.7\ \Omega,\ \textit{ans.}$$

EXPLANATION . . . The diameters are squared in order to obtain the circular-mil cross-sectional area of the wire. An inverse proportion is then formed and solved. An inverse proportion is used because the resistance varies inversely as the cross-sectional area.

Since magnet wire is used for winding coils in which the closeness of the turns prevents free dissipation of heat, the current-carrying capacity of magnet wire is much less than that of hookup wire or other wire with its surface exposed to the air. A rule of thumb for determining the current-carrying capacity of wire wound into a multilayer coil is one ampere per 1000 CM. For example, the table shows the circular-mil area of No. 18 wire as 1624 CM. Therefore, 1.6 A is a reasonable estimate of the maximum current that a coil wound with No. 18 wire can carry.

It is useful to remember that wire area doubles for every three gage numbers. Thus a No. 20 wire has twice the circular-mil area of a No. 23 wire, and therefore half the resistance.

WHAT HAVE YOU LEARNED?

1. The copper wire table shows that the diameter of No. 24 wire is 20.1 mils. What is the diameter of the wire in inches?

2. Having found the diameter of No. 24 wire in Problem 1, find the circular-mil area of the wire. Compare your answer with the value given in the copper wire table.

3. You must run hookup wire between two points in a circuit that are 5 ft apart. The wire will be carrying 0.2 A, and the voltage loss in the wire must not exceed 5 mV. What is the smallest size wire you can use? Use the column "Ohms per 1000 ft" in Table 1 to find the resistance of various sizes of wire.

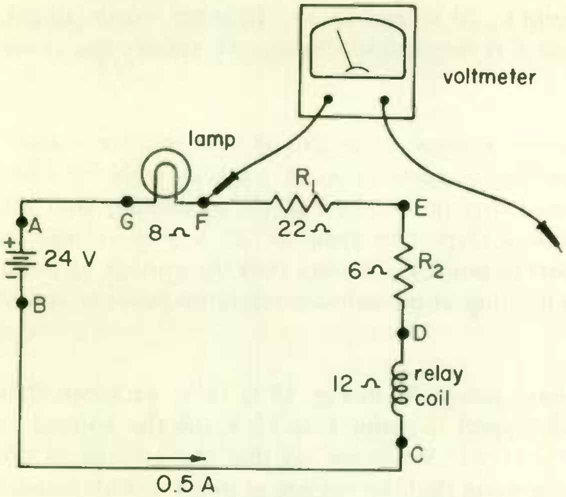

Fig. 18 The voltmeter reading depends upon where the meter is connected.

ANSWERS

1. 0.0201 in. 2. 404.01 CM . . . $20.1^2 = 404.01$. This is the same as the value given in Table 1.

3. No. 16 . . . By Ohm's law the maximum resistance the 5-ft length of wire can have would be

$$R = \frac{E}{I} = \frac{0.005\ \text{V}}{0.2\ \text{A}} = 0.025\ \Omega$$

The maximum resistance per foot would be $\frac{0.025}{5} = 0.005\ \Omega$ or $1000 \times 0.005 = 5\ \Omega$ per 1000 ft. Looking in Table 1, we find that No. 16 is the smallest wire that has a resistance not exceeding 5 Ω per 1000 ft.

UNDERSTANDING POTENTIAL BETTER

Until you get a clear mental grip on the meaning of *potential* or *voltage*, you cannot clearly understand much about electronic circuits. Since every electronic circuit involves voltage, it is not hard to see why this is true.

6 VOLTAGE IS ALWAYS RELATIVE . . . What is the voltage at point *F* in Fig. 18? To find out, we can use a voltmeter, one lead of which is, of course, connected to point *F* as shown. But a voltmeter has two leads, and where do we connect the other lead? If we connect it to point *E*, the voltmeter will read 11 V. If we connect it to point *D*, the meter will read

14 V; if we connect it to point *C*, 20 V; and so on. In other words, to ask what the voltage is at point *F* is meaningless unless we specify the other point of measurement.

For all practical applications, voltage or potential is a relative matter; that is, we can state the voltage at some point in a circuit only by comparing that point with some other point. In Fig. 18, we can say that the voltage at point *F* is 14 V with respect to point *D*, 20 V with respect to point *C*, or 11 V with respect to point *E*. To say that the voltage at point *F* is so many volts means nothing at all unless a reference point is stated or implied.

When we say that the voltage across R_1 in Fig. 18 is 11 V, we mean that the voltage at point *F* with respect to point *E* is 11 V (or the voltage at point *E* with respect to *F* is 11 V). When we say that the voltage of the battery in Fig. 18 is 24 V, we mean that the voltage at point *A* with respect to point *B* is 24 V. However, you should not say that the voltage at point *A* is 24 V unless you are sure that the person you are talking to understands that you mean the voltage at point *A* with respect to point *B*, the negative battery terminal. For example, the voltage at point *A* with respect to point *D* is not 24 V, but 18 V.

7

POLARITY WITH RESPECT TO REFERENCE POINT . . . More often than not you will want to know not just the numerical value of the voltage between two points but also the polarity of that voltage. A voltage at a given point in a circuit is positive if it is more positive than the reference point. The voltage at point *F* in Fig. 18 is +14 V with respect to point *D*. We can tell this by the fact that the plus lead of the voltmeter must be connected to the point at which we want the voltage, point *F*, in order that the voltmeter will read forward. The voltage at point *D* is −14 V with respect to point *F* because to measure the voltage at point *D* you must connect the negative voltmeter lead to point *D* in order to get a forward reading.

The voltage at some point in a circuit could be either positive or negative, depending upon what is used as the reference point. Point *F* is +14 V with respect to point *D*, but point *F* is −4 V with respect to point *G*. Not only voltage but also polarity at a point is meaningless unless the reference point with which a comparison is being made is specified or otherwise understood.

8

GROUND AS THE REFERENCE POINT FOR VOLTAGE MEASUREMENTS . . . As will be discussed in the next topic, most practical electronic equipment has some point in the circuitry grounded.

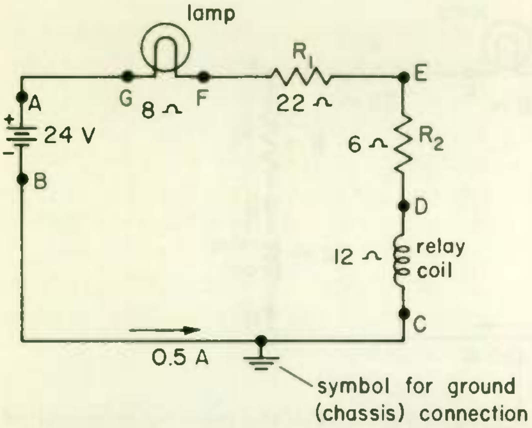

Fig. 19 **Voltage measurements often use ground as the reference point.**

Very frequently the metal chassis to which the ground connection is made is used as the reference point to which voltage measurements are made. For example, the voltage with respect to ground at point *F* in Fig. 19 is +20 V. The voltage to ground at point *D* is +6 V.

The voltages marked on a manufacturer's circuit diagram can usually be assumed to be with respect to ground if not otherwise stated. However, look in the corner of the drawing for a legend that gives the reference point used for the voltage measurements. For tubes, the cathode is often used as the reference point to which the voltages of the other pin elements are measured. Tube pin voltages in tube reference manuals are nearly always with respect to cathode.

WHAT HAVE YOU LEARNED?

1. In Fig. 18 the voltage and polarity at point *E* with respect to point *C* are ______.

2. In Fig. 18 the voltage and polarity at point *C* with respect to point *D* are (a) ______. The voltage across the relay coil is (b) ______ volts. The voltage and polarity at point *D* with respect to point *C* are (c) ______.

3. In Fig. 18 the voltage at point *B* with respect to point *C* is ______ volts.

4. In Fig. 18 the voltage and polarity of point *A* with respect to point *E* are ______.

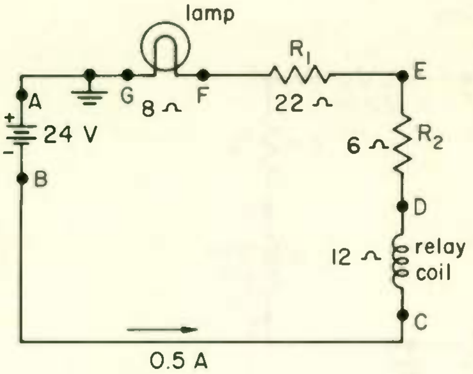

Fig. 20

5. In Fig. 19 the voltage and polarity to ground of the positive terminal of the battery are (a) ______ and the voltage and polarity to ground of the negative battery terminal are (b) ______.

6. In Fig. 20 the voltage and polarity to ground of the positive terminal of the battery are (a) ______ and the voltage and polarity to ground of the negative battery terminal are (b) ______. The voltage across the battery in both Fig. 19 and Fig. 20 is (c) ______ volts.

7. In Fig. 20 the voltage and polarity to ground at point *F* are (a) ______; at point *E* they are (b) ______; at point *D* they are (c) ______; and at point *C* they are (d) ______ volts.

ANSWERS

1. +9 V . . . The resistance between points *E* and *C* is 18 Ω. $E = I \times R = 0.5 \times 18\ \Omega = 9$ V. To find the polarity, remember that the end of a passive component from which the current leaves is positive with respect to the end the current enters. Hence, to get a forward reading with the voltmeter, the positive lead of the meter must be connected to point *E*. Hence, point *E* is 9 V positive with respect to *C*.
2. (a) −6 V (b) 6 . . . We have no basis for calling this voltage either positive or negative, since nothing is said about which end of the relay is the reference end. However, if we are interested in polarity, we can say "the voltage across the relay coil is 6 V, end *D* being positive with respect to end *C*." (c) +6 V
3. 0 4. +15 V 5. (a) + 24 V; (b) 0 V
6. (a) 0 V (b) −24 V . . . Your voltmeter is, of course, measuring the voltage across the battery when the leads are connected at point *B* and at ground in Fig. 20. For a forward meter reading, the negative lead of the voltmeter must be connected to point *B*, the negative battery terminal. Hence, point *B* is −24 V with respect to ground. (c) 24
7. (a) −4 V . . . The current direction through the lamp is from *F* to ground. Since the lamp is a passive component, the current enters at the negative side (point *F*) comes out at the positive side, which is connected to ground. Hence, point *F* is negative with respect to ground.
(b) −15 V; (c) −18 V; (d) −24 V

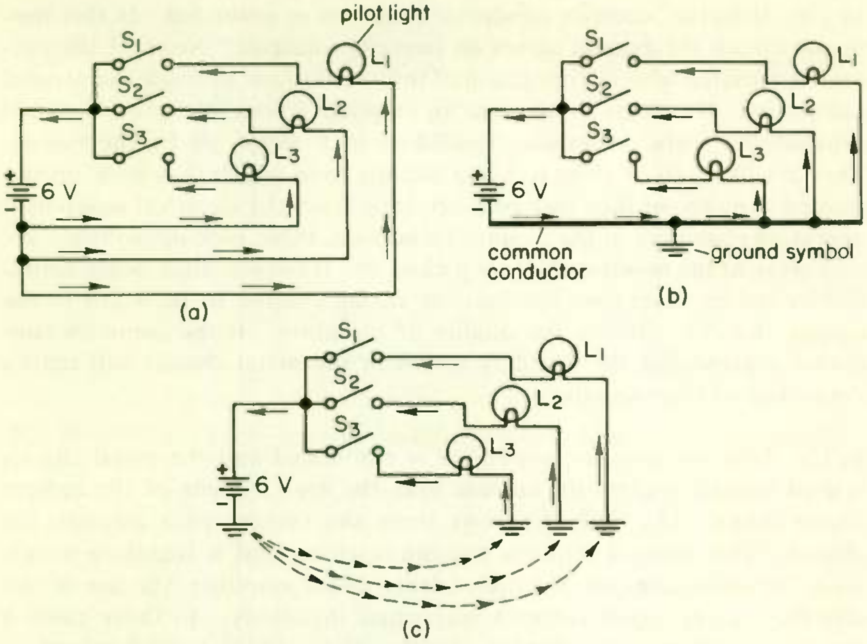

Fig. 21 The use of grounding to reduce the amount of wiring.

9 THE USE OF GROUNDS IN ELECTRONICS

. . . Most electronics circuitry is built up on a metal chassis. Some of the wiring leads are usually soldered or otherwise connected directly to the chassis. Such leads are said to be *grounded*. Grounding is used for one or both of two reasons:

1. To reduce the amount of wiring by using the metal chassis itself as a conductor.

2. To reduce noise or hum and prevent interaction with nearby circuits and thus improve performance.

The simple circuitry of Fig. 21 illustrates the use of grounds to reduce the amount of wiring required. The three pilot lights L_1, L_2, and L_3 are turned on an off by the three associated switches S_1, S_2, and S_3. In (a) each of the three lamps has its own independent wiring. In (b) the amount of wiring required is reduced to just a single wire to carry all three currents from the negative side of the battery to the lamps. A conductor used as a path for a number of different currents is called a *common conductor*. It is sometimes drawn heavier than the other wiring, as it is here, so that it is easily identifiable, and also because a heavier wire is actually sometimes used as the common conductor.

In Fig. 21(b) the common conductor is shown as grounded. In this particular circuit the ground serves no purpose whatever. None of the currents associated with the operation of this circuit flow through the ground connection. However, if this were an amplifier circuit, the ground would probably be useful. Circuits are seldom in a world all by themselves. They are likely to be close to other circuits from which they pick up unwanted voltages, or they may pick up static from the electrical equipment operating elsewhere in the room. To be sure, these pick-up voltages are very weak at the moment they are picked up. However, after being amplified by the amplifier they can become strong enough to be heard in the output, thereby reducing the quality of reception. If the common conductor is grounded, the shielding action of the metal chassis will reduce the pickup of stray signals.

In Fig. 21(c) the common conductor is eliminated and the metal chassis is used instead to carry the current from the negative side of the battery to the lamps. The dashed arrows show the current path through the chassis. This method requires minimum wiring and is therefore widely used. In some cases, as in a high-fidelity audio amplifier, the use of the chassis to carry signal currents may cause instability. In those cases a common conductor, grounded at a single point as in (b), is used instead.

Figure 22(a) shows a simple vacuum-tube circuit drawn without using a a ground. Points *A*, *B*, *D*, *E*, and *F* are all connected together by the bottom horizontal wire. If we solder points *A*, *B*, *D*, *E*, and *F* to the chassis, they will all be electrically connected without the need for the horizontal wire. The circuit will then be as shown in Fig. 22(b), which is electrically identical with (a). We sometimes draw vacuum-tube and transistor circuits without a ground as in (a) to make it easier for you to trace the circuit action. The practical version of such circuits is likely to have one or more grounds, as in (b).

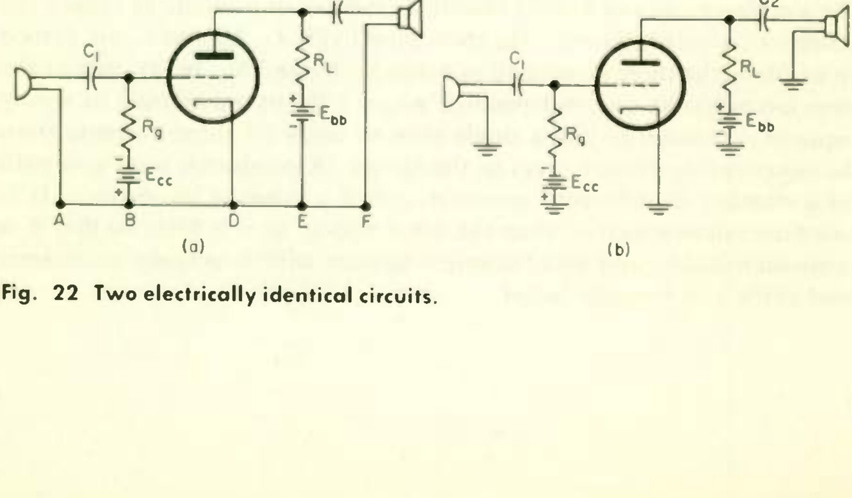

Fig. 22 Two electrically identical circuits.

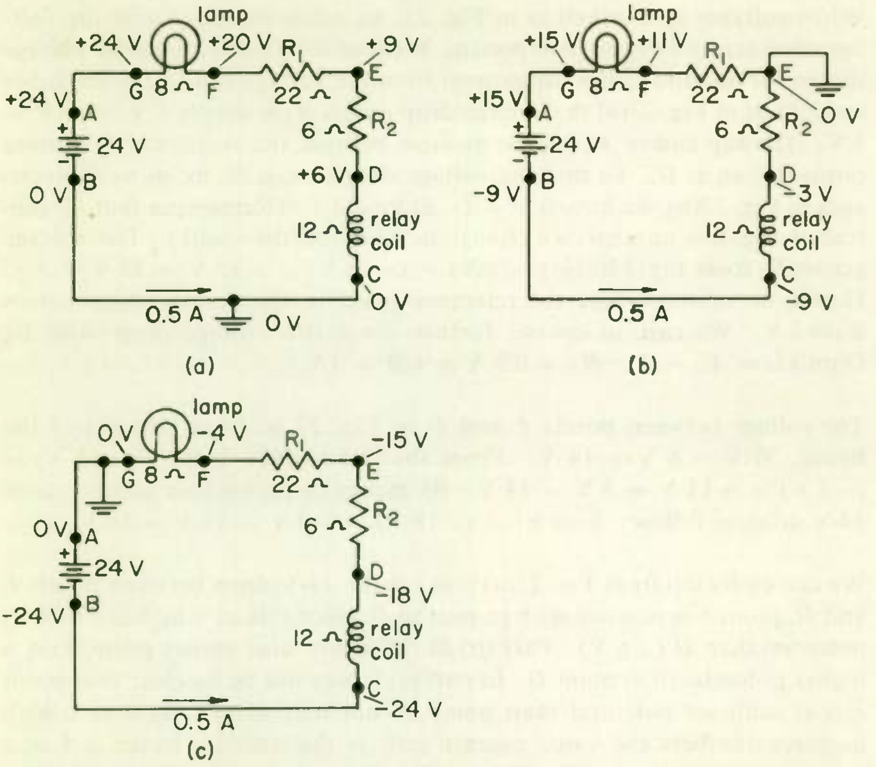

Fig. 23 Ground or other reference point is always considered as zero voltage.

10 VOLTAGES MEASURED TO THE SAME REFERENCE POINT . . .

It is often useful to measure all voltages in an electronics circuit with respect to the same reference point, and then ground is generally the reference point used. The common reference point is always considered as being at zero voltage, and the voltages at other points are either positive or negative depending on whether they are higher (that is, more positive) or lower (less positive, or more negative) than the reference point.

Figure 23 shows the voltage around a circuit measured to ground for three different positions of ground. Notice that, regardless of the circuit point that is grounded, ground is considered as at zero volts. Notice also that the marked voltage values are all different in the three circuits because different points are grounded. When the reference point is changed, as by grounding a different point, all voltage values measured to the reference point will be changed. Notice further that a point that is positive when measured to one reference point may be negative when the reference point is changed. Thus point *D* is positive in (a) and negative in (b) and (c).

When voltages are marked as in Fig. 23, we often want to know the voltage drop across a certain component. We find it by subtracting the voltage shown for one end of the component from the voltage shown for the other end. Thus in Fig. 23(a) the voltage drop across R_2 is simply $9\text{ V} - 6\text{ V} = 3\text{ V}$. The top end of R_2 will be positive because the voltage at E is more positive than at D. To find the voltage drop across R_2 by using the voltages in Fig. 23(b), we have $0\text{ V} - (-3)\text{ V} = 3\text{ V}$. (Remember that to subtract a negative number, we change its sign and then add.) The voltage across R_2 from Fig. 23(c) is $(-15\text{ V}) - (-18\text{ V}) = -15\text{ V} + 18\text{ V} = 3\text{ V}$. Hence, no matter where the reference point is, the voltage drop across R_2 is 3 V. We can, of course, further check this voltage drop value by Ohm's law: $E_2 = I \times R_2 = 0.5\text{ A} \times 6\,\Omega = 3\text{ V}$.

The voltage between points F and D in Fig. 23 is, from part (a) of the figure, $20\text{ V} - 6\text{ V} = 14\text{ V}$. From (b) this voltage drop is $(+11\text{ V}) - (-3\text{ V}) = +11\text{ V} + 3\text{ V} = 14\text{ V}$. By means of part (c) we get the same 14-V drop, as follows: $(-4\text{ V}) - (-18\text{ V}) = -4\text{ V} + 18\text{ V} = 14\text{ V}$.

We can easily tell from Fig. 23(a) that for the 14-V drop between points F and D, point F is positive with respect to D, since F is at a higher (+20 V) potential than D (+6 V). Part (b) of the figure also shows point F at a higher potential than point D. In part (c) it may not be so clear that point F is at a higher potential than point D, but mathematically it is. With negative numbers the value nearest zero is the greater; hence -4 is a greater number than -18. Think of a thermometer and you won't get mixed up on this—$-4°$ is higher up the scale than $-18°$.

WHAT HAVE YOU LEARNED?

1. Figure 24 is Fig. 15(g) redrawn with a ground added. Mark on the figure the voltages with respect to ground at points A, B, C, D, F, G, and H. Be sure to show the polarity of each voltage.

2. Figure 25 is the same as Fig. 24, except that the ground has been changed to a different place. Mark on the figure the voltages with respect to ground at points A, B, C, D, F, G, and H, being sure to also mark the polarity of each voltage.

ANSWERS

1. See Fig. 26. 2. See Fig. 27.

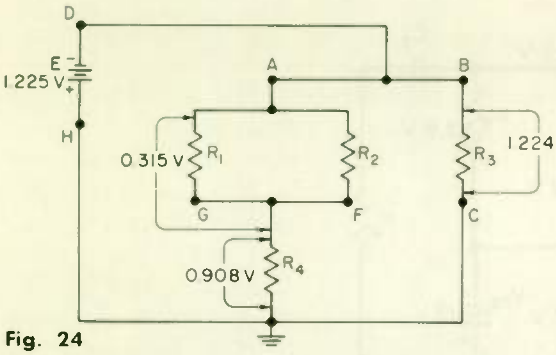

Fig. 24

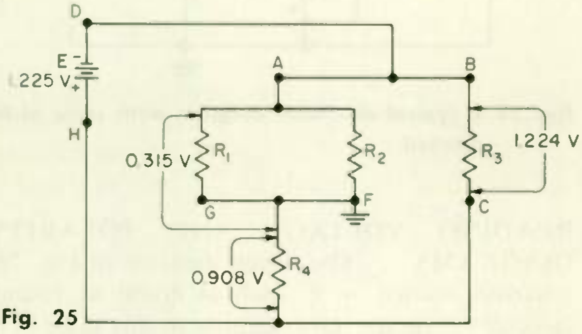

Fig. 25

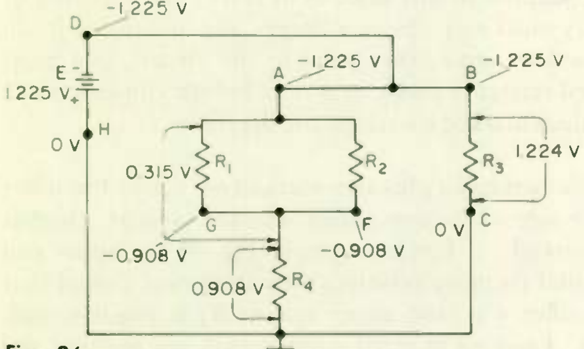

Fig. 26

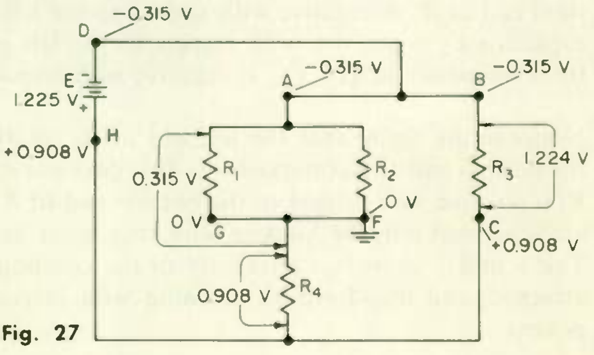

Fig. 27

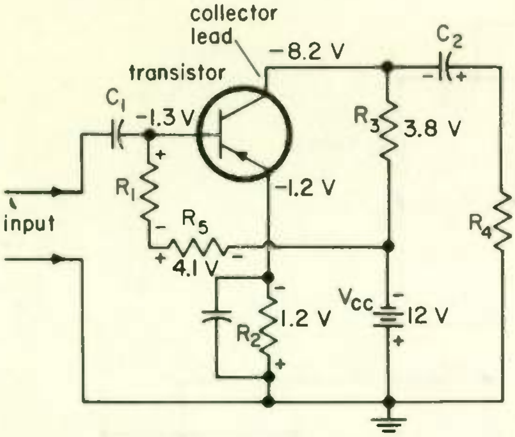

Fig. 28 A typical electronic diagram with some of the voltages and polarities marked.

11 READING VOLTAGE AND POLARITY MARKINGS ON DIAGRAMS . . . The circuit diagram of Fig. 28 has some voltages and polarities shown on it, such as might be found on a practical manufacturer's diagram. Our purpose in this topic is to clarify the meaning of these voltage and polarity markings. Since voltages and polarities mean nothing except with respect to some other point in the circuit, you must be able to tell the intended reference point or points before you can make any use of the voltage values marked on schematic diagrams.

When one lead of a component has a plus sign marked on it and the other lead has a minus sign, the side of the component marked + is at a higher potential than the side marked –. For example, in Fig. 28 the upper end of R_1 is at a higher potential (is more positive) than the lower end of that resistor or, to say it another way, the upper end of R_1 is positive with respect to the lower end. Looking at other components, we see that the right end of R_5 is negative with respect to the left end, the right plate of capacitor C_2 is positive with respect to the left plate, and the top lead from the power supply V_{CC} is negative with respect to the bottom lead.

Notice in the figure that the left end of R_5 (marked +) is connected to the bottom end of R_1 (marked –). This does not mean that the left end of R_5 is positive with respect to the bottom end of R_1. Since the two points are separated only by hookup wire they must be at the same potential. The + and – markings refer only to the components to which they are attached, and they have no meaning with respect to some other component.

A voltage value marked in the center of a component means the voltage drop across that component. For example, the diagram shows the voltage drop across R_3 to be 3.8 V. Notice that this voltage has neither a + or − sign in front of it, since polarity has no meaning unless we know which end of the component is considered to be the reference end. The voltage drop across R_5 is shown as 4.1 V, and the polarity markings show that the left end of the resistor is 4.1 V positive with respect to the right end. Similarly, the diagram shows the upper end of V_{CC} to be 12 V negative with respect to the bottom end.

Voltages marked at points on the wiring (that is, not in the middle of a component), refer to voltage readings with respect to some common reference point. This common reference point may be considered to be ground if nothing is said to the contrary. Thus in Fig. 28 the −1.3 V marked on the wiring means that, at the point where this voltage value is shown, the voltage with respect to ground is −1.3 V. Similarly, the −8.2 V indicates that the collector lead of the transistor is −8.2 V with respect to ground.

12 VOLTAGES BETWEEN UNCONNECTED POINTS ARE MEANINGLESS . . . We have emphasized that voltage at a given point can have meaning only with respect to another point. However, there must be an electrical path between the two points involved or again the voltage will have no meaning. In Fig. 29(a) there is no electrical connection between the left and right circuits. Consequently, to speak of the voltage at point *A* with respect to point *B* has no meaning. The voltmeter connected between these two points will either read zero or (if it is an extremely sensitive meter) some unpredictable value.

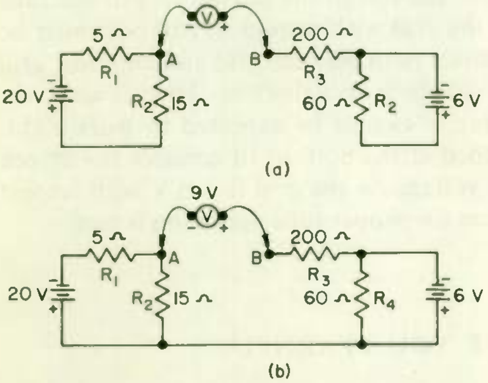

Fig. 29 Voltage between two points has no meaning unless the two points are somehow connected.

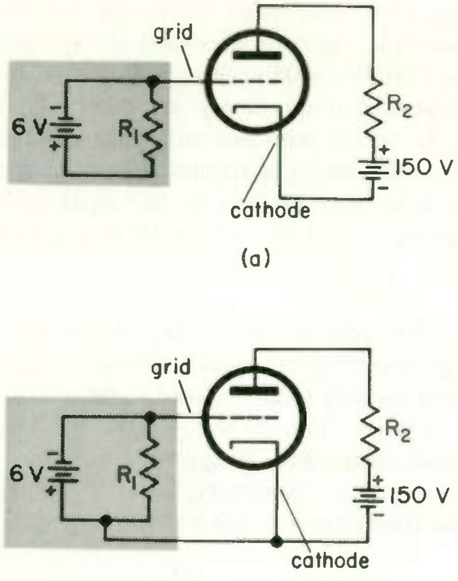

(a)

(b)

Fig. 30 Grid-voltage in a vacuum-tube circuit.

In Fig. 29(b) a wire has been added at the bottom to connect the two parts of the circuit together. Now we can properly speak of the potential between points *A* and *B*, and the voltmeter will read 9 V.

In a vacuum tube, such as the one shown in Fig. 30(a), the grid is electrically insulated from the rest of the tube elements. Therefore the shaded area is not electrically connected to the rest of the circuitry. For the tube to operate right, the voltage on the grid with respect to cathode must be -6 V. But when there is no electrical path between grid and cathode, grid voltage with respect to cathode voltage is meaningless. Hence, when the tube is connected as in Fig. 30(a), it cannot be expected to work right. In Fig. 30(b) a wire has been added at the bottom to connect the screen area with the cathode. Now the voltage on the grid is -6 V with respect to cathode, so that the requirement for proper tube operation is met.

WHAT HAVE YOU LEARNED?

1. The voltage of $+150$ V marked on Fig. 31 means that *(the voltage drop across R_3 is 150 V)(the screen is $+150$ V with respect to ground).*

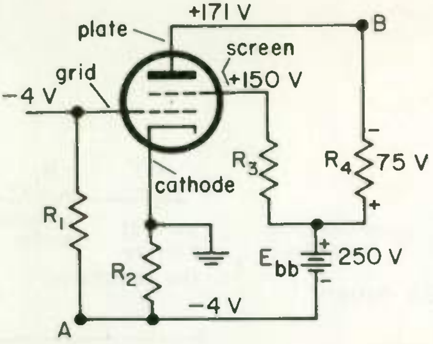

Fig. 31

2. The voltage from point B to ground in Fig. 31 is *(75 V)(+171 V).*

3. The voltage at the positive terminal of the power supply E_{bb} in Fig. 31 is *(+250 V with respect to ground)(+250 V with respect to the negative terminal).*

4. Figure 32 *(does)(does not)* show that point B is positive with respect to point A.

5. Does any current flow through R_2 in Fig. 32?

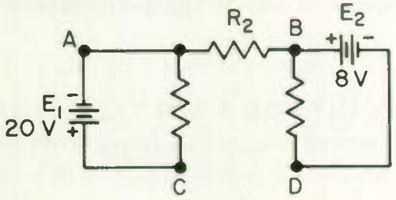

Fig. 32

ANSWERS

1. The screen is + 150 V with respect to ground. 2. + 171 V
3. + 250 V with respect to the negative terminal . . . Since the negative terminal is at − 4 V with respect to ground, the positive terminal is at + 246 V with respect to ground.
4. Does not . . . The − sign at point A and the + sign at point B refer to the polarity of batteries E_1 and E_2, respectively, and they do not in any way suggest that point B is positive with respect to point A.
5. No . . . For current to flow through R_2 there would have to be a complete electrical loop so that the current flowing through R_2 could return to its starting point. If a wire were run between points C and D, then current would flow through R_2.

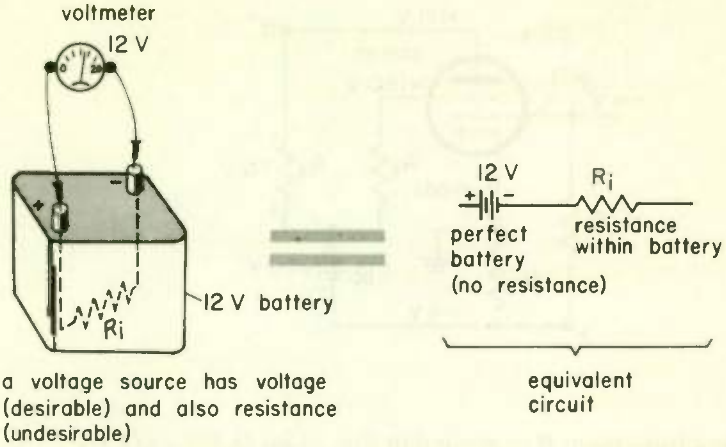

Fig. 33 **The equivalent circuit for a power source is a perfect battery with a resistance in series to represent the internal resistance of the power source.**

PRACTICAL VOLTAGE SOURCES

An ideal power source has no resistance, but any practical power source, such as a battery or a generator, does have resistance. Although the resistance of a power source can sometimes be neglected, it is often of great importance because it affects the performance of the circuit using the power supply.

13 EQUIVALENT CIRCUIT FOR A VOLTAGE SOURCE . . . The value of the resistance of a power source can range from negligibly low to very high. It is useful to represent a practical source of power by an equivalent circuit made up of a perfect voltage source with a resistance in series, the value of the series resistance being the internal resistance of the power source. Figure 33 is a representation of a battery by an equivalent circuit. The materials from which a battery are constructed, like all other conducting materials, have resistance. This resistance is shown as R_i in the equivalent circuit. The 12 V shown for the perfect battery in the equivalent circuit is the voltmeter reading when no current is being drawn from the battery. Because of the internal resistance R_i, the voltage of a practical battery goes down a little when current is drawn from the battery.

When we measure battery voltage with a voltmeter across the battery terminals, as in Fig. 34 we measure the true battery voltage E less any voltage loss across the internal resistance R_i. If the switch S is open, so that there

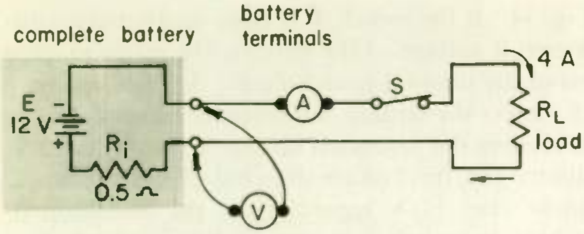

Fig. 34 Because of the voltage loss across R_i, the reading of the voltmeter is less than 12 V when switch S is closed.

is no current drain from the battery (and hence no current through R_i), the voltage drop across R_i is negligible, and therefore the voltmeter reads 12 V, the true voltage developed within the battery.

Suppose that, when switch S is closed in Fig. 34, the load R_L to which the battery is connected draws 4 A. Then 4 A flows through the internal resistance R_i. The voltage drop across R_i is $E = I \times R = 4\text{ A} \times 0.5\ \Omega = 2\text{ V}$. The voltmeter reads the voltage E minus the voltage drop across R_i, or $12\text{ V} - 2\text{ V} = 10\text{ V}$. Thus the effect of the internal resistance is to cause the battery voltage to drop when the battery is loaded. The greater the current taken from the battery, the more this voltage drop will be.

14 CHECK BATTERY CONDITION . . . As ordinary dry cells or storage batteries become discharged their internal resistance increases. With continued discharge of a dry cell the internal resistance eventually becomes so high that the cell is useless and must be replaced. Storage batteries must be recharged before they reach this degree of discharge; otherwise, they will be damaged.

The end of the useful life of dry cells used to power electronic equipment, such as portable radios, is often indicated by noisy reception. As the internal resistance increases, battery-generated noise increases. Noise is caused by small random variations in the internal resistance. If the internal resistance is high, the varying voltage drop across the small resistance changes may be sufficient to be heard in the receiver.

A battery is checked by using a voltmeter to read the battery voltage *while the battery is delivering normal current to its load.* If the voltage read is considerably lower than for a new battery, the battery should be replaced, or recharged if of the storage type. *Never attempt to find the condition of a battery by reading its open-circuit voltage.* The open-circuit voltage is the voltage when the battery is furnishing no current, which is why open-circuit voltage readings are useless for determining the condition of a battery.

Consider the circuit of Fig. 34. If the switch S is open so that the voltmeter is reading the open-circuit voltage of the battery, the meter reading will be the same regardless of the internal resistance R_i. Remember there is no voltage loss across R_i unless the battery is delivering current. When S is open, the voltmeter is reading the generated voltage E, which is 12 V. As the battery becomes discharged, this voltage does not generally change. Thus the voltmeter is apt to read 12 V regardless of the condition of charge of the battery, as long as switch S is open. When switch S is closed, the greater the R_i, the less the voltmeter will read, so that the voltmeter reading then indicates the charge condition of the battery.

15 HIGH-IMPEDANCE AND LOW-IMPEDANCE SOURCES . . . Batteries, generators, and 115-V building outlets are sources of electric power for operating electronic equipment. Part of this power is converted within the electronic equipment to other voltages. For example, many pieces of electronic gear have one or more oscillators, which convert the d-c voltage from the battery or other original power source into alternating voltage of whatever frequency is desired. Since the oscillator is generating something different, we look at an oscillator as another power or voltage or signal source. A tube or transistor takes a very weak signal, such as one picked up by a receiving antenna, and makes it into a much stronger signal. We also look at tubes and transistors—when they are used in this manner—as signal or voltage generators, since they replace the original weak signal with a much stronger signal.

Thus we see that there are many signal or voltage sources in electronic equipment. Signal sources are often classified as "high impedance" or "low impedance," and you should know the difference between the two.

Figure 35 shows equivalent circuit diagrams for both d-c and a-c voltage sources. Although a battery is used to represent the voltage E in part (a) of the figure, this does not imply that a battery is actually used. These are equivalent circuits, and a battery with suitable resistance in series is equivalent to any d-c voltage source.

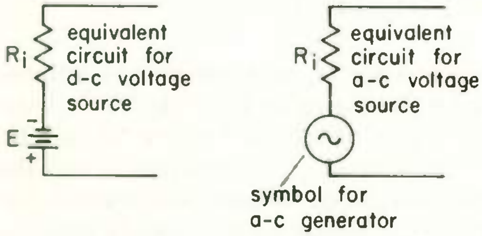

(a) (b)

Fig. 35 Equivalent circuits for d-c and a-c sources.

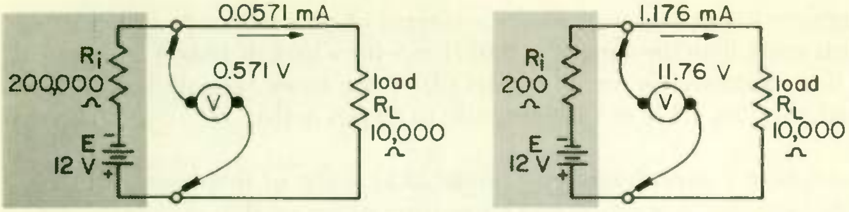

(a)High impedance source (b)Low impedance source

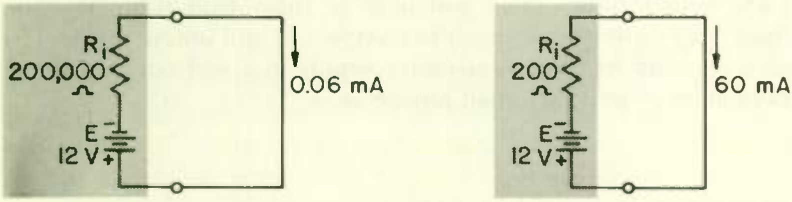

(c)High impedance source shorted (d)Low impedance source shorted

Fig. 36 Effects of high and low source impedances on voltages and currents.

If the internal resistance R_i is low in either (a) or (b) of Fig. 35, the circuit represented is said to be a low-resistance or a low-impedance source. If R_i is high, the circuit represented is a high-resistance or high-impedance source. Of course, the source need not be either high-resistance or low-resistance; it can very well be some value in between. Perhaps the first question to come to mind about high- and low-resistance sources is what value of R_i represents a high resistance and what value a low resistance. A voltage source is a high-resistance source if a great drop in voltage occurs when an attempt is made to draw appreciable current from the source. A low-resistance source is one such that its voltage does not change very much when it is furnishing current.

Some characteristics of high- and low-resistance sources are shown in Fig. 36. In (a), the high-resistance source, notice that the source voltage drops from an open-circuit value of 12 V down to only 0.571 V when furnishing current to a 10,000-Ω load. For the same load the voltage of the low-resistance source, part (b), drops very little—from 12 V down to 11.76 V. Also notice the much lower current delivered to the load by the high-resistance source: 0.0571 mA by the high-resistance source against 1.176 mA by the low-resistance source.

Varying the load resistance does not affect the current from a high-resistance source very much. Notice in Fig. 36(c) that short-circuiting the high-resistance source produces a current of only 0.06 mA, which is only little more than the current of 0.0571 mA for a load of 10,000 Ω. Shorting a low-resistance source, as in part (d) of the figure, greatly increases the current, from 1.176 mA in Fig. 36(b) to 60 mA in (d).

Sources of power should be considered as being of low resistance unless otherwise stated or unless you know from its nature that the supply would be of high resistance. Specifically, you should normally assume that the supply resistance is so low that the voltage drop due to current drawn from the supply is negligible. That is not to say that high-resistance sources are unimportant. You will hear of them from time to time throughout your study of and career in electronics, and unless you understand what is meant by a high-resistance supply you will not be able to understand many important circuit principles.

POWER IN D-C CIRCUITS

16 WORK, POWER, AND ENERGY . . . Before we can discuss the next important part of this lesson, power in d-c circuits, it is important that you know the difference between work, power, and energy.

In a scientific sense, *work* is the overcoming of opposition. A man does work when he lifts a crated television set from the warehouse platform into a truck or when he drags the crate along the platform. But the man does no work at all, in the scientific sense of the word, no matter how hard he pushes or pulls if he does not lift or move the crate. If the resistance offered by the crate to being moved is not overcome, no work is done.

Work is measured by the product of a force times the distance through which the force moves. In a mechanical system, the most common unit of work is the *foot-pound*.

In an electrical system, work is measured in *watthours* or *kilowatt-hours*. One kilowatthour of work in an electrical system equals approximately 2,660,000 ft-lb (foot-pounds) of work.

The work done by a man carrying a 50-lb audio amplifier up a flight of stairs 12 ft high is 50 lb × 12 ft = 600 ft-lb. From the standpoint of work done, it makes no difference whether the man does the job in an hour or in a minute.

But the amount of *power* required to do the job does depend on time. The amount of power required to do a job in one minute is 60 times the power required to do it in one hour. The term "power" includes the idea of time. Power is the speed, or rate, of doing work. Then,

$$\text{power} = \frac{\text{work}}{\text{time}} \quad \text{or} \quad \text{work} = \text{power} \times \text{time}$$

The popular unit for measuring power in mechanical systems is the *horsepower.* If a machine can do 33,000 ft-lb of work in one minute, its power is one horsepower.

The practical units of power in electrical circuits are the watt and kilowatt. One kilowatt (abbreviated kW) equals 1000 watts (abbreviated W). Horsepower and watts are related as follows:

$$1 \text{ hp} = 746 \text{ W} \qquad 1 \text{ kW} = 1.34 \text{ hp}$$

The work done in an electrical circuit, in kilowatthours, equals the power in kilowatts times the number of hours. For example, if the power required to operate a motor is 2 kW and the motor operates for 7 hr, the work done is 2 × 7 = 14 kWhr (kilowatthours).

Energy is the capacity to do work. For example, if a battery is able to do 1 kWhr of work before it must be recharged, the energy stored by the battery is 1 kWhr. The difference between work and energy is that work is what has been done by a device and energy indicates the amount of work that a source of energy is able to do. There are many types of energy. A moving car, for example, has mechanical energy. A charged battery has chemical energy. A hot stove has heat energy.

An important concept about energy is that, when work is done, the energy used to do the work is never used up; it is simply changed from one form to another. For example, suppose a charged battery causes current to flow in a circuit. Chemical energy of the battery has changed to electric energy in the circuit. Suppose the electric energy of the circuit causes a vacuum-tube filament to heat up; now the electric energy has changed to heat energy. When someone talks into a microphone and thus generates an input signal to an amplifier, the acoustic energy of the sound waves is changed into electric energy.

17 POWER IN ELECTRIC CIRCUITS . . . The units of power in electric circuits are the watt and the kilowatt. One kilowatt equals 1000 W. Power, in watts, is the product of the voltage, in volts, times the current, in amperes.

$$P = EI \quad \text{or} \quad E = \frac{P}{I} \quad \text{or} \quad I = \frac{P}{E}$$

These are the basic formulas for power. However, two other formulas derived from Ohm's law are also very useful for calculating power. According to Ohm's law, $E = IR$. Therefore, by substituting for E in the basic power formula, we get

$$P = EI = (IR) \times I$$

$$P = I^2R$$

And Ohm's law for current is $I = \frac{E}{R}$. By substituting for I in the basic power formula, we get

$$P = EI = E \times \left(\frac{E}{R}\right)$$

$$P = \frac{E^2}{R}$$

Remember these three formulas. They are the three important formulas for calculating power:

$$P = EI \quad P = I^2R \quad \text{and} \quad P = \frac{E^2}{R}$$

18 POWER CALCULATIONS IN D-C CIRCUITS

. . . The total power in a circuit can be calculated easily if any two of three quantities, voltage, current, or resistance, are known. For example, if a vacuum tube draws 300 mA (0.3 A) at 300 V, the power furnished by the power supply can be calculated by using the formula $P = EI = 300 \times 0.3 = 90$ W.

EXAMPLE . . . A 300-Ω resistor is connected in series with the plate of a vacuum tube. The power source delivers 500 V at 100 mA to the combination. The power used by the resistor is (a) ________ watts. The voltage across the resistor is (b) ________ volts. The voltage drop across the vacuum tube is (c) ________ volts. The power used by the vacuum tube is (d) ________ watts.

SOLUTION . . .

(a) $P = I^2R = (0.1)^2 \times 300 = 0.01 \times 300 = 3$ W, *ans.*

(b) $E = IR = 0.1$ A $\times$ 300 Ω = 30 V, *ans.*

(c) 500 V − 30 V = 470 V, *ans.*

(d) $P = EI = 470$ V $\times$ 0.1 A = 47 W, *ans.*

Explanation . . . Always be careful to use only quantities that apply specifically to the component. In this example, the current of 100 mA does flow through the resistor, but the entire 500 V does not appear across the resistor. Therefore, we use the formula $P = I^2R$ to calculate the power used by the resistor.

Suppose 100 V is applied across a 5000-Ω resistor. We would simply use the formula

$$P = \frac{E^2}{R} = \frac{100 \times 100}{5000} = \frac{10{,}000}{5000} = 2\text{ W}$$

WHAT HAVE YOU LEARNED?

1. A light bulb is used across a 120-V line, and it draws 60 mA. The power used by the light bulb is ______ watts.

2. A light bulb is stamped "60 W," and it is a 120-V bulb. This bulb normally draws ______ amperes from the line.

3. The filament of an 834 tube is operated at 7.5 V, and it draws 3.25 A. The power used for heating the filament of this tube is ______ watts.

4. The current through a 15,000-Ω resistor is 7 mA. The voltage across the resistor is (a) ______ volts. The power dissipated by the resistor is (b) ______ watts.

5. It is desired to operate the screen grid of a vacuum tube at 150 V, which must be obtained from a 250-V supply by using a dropping resistor in series with the grid. The screen grid draws 10 mA. The voltage across the dropping resistor is (a) ______ volts. The value of the dropping resistor is (b) ______ ohms. Power dissipated by the resistor is (c) ______ watt(s).

6. In Fig. 37 the voltage across R_1 is (a) ______ volts. Since R_1 and R_2 are in parallel, the voltage across R_2 is (b) ______ volts. The current through R_2 is (c) ______ amperes, and the current through R_3 is (d) ______ amperes. Power dissipated by R_1 is (e) ______ watts; that by R_2 is (f) ______ watts; and that by R_3 is (g) ______ watts. Voltage supplied by the battery is (h) ______ volts. Power supplied by the battery is (i) ______ watts.

7. A television set is rated at 115 V, 450 W. A check with an ammeter shows that the set is drawing 2.8 A from the line. Is this normal? (a) ______ If not, what current should the set draw? (b) ______

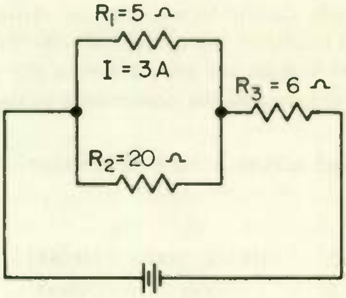

Fig. 37

ANSWERS

1. 7.2 . . . $P = EI = 120\text{ Volts} \times 0.06\text{ A} = 7.2\text{ W}$
2. 0.5 . . . $I = \frac{P}{E} = \frac{60\text{ W}}{120\text{ V}} = 0.5\text{ A}$
3. 24.4 . . . $P = EI = 7.5\text{ V} \times 3.25\text{ A} = 24.4\text{ W}$
4. (a) 105 (b) 0.735 . . . Use $P = I^2R$, $P = IE$, or $P = \frac{E^2}{R}$
5. (a) 100; (b) 10,000; (c) 1
6. (a) 15; (b) 15; (c) 0.75; (d) 3.75; (e) 45; (f) 11.25; (g) 84.4; (h) 37.5; (i) 141
7. (a) No; (b) 3.91 A

19 WATTAGE RATINGS OF RESISTORS . . . Resistors are rated not only for value of resistance but also for how much power they can dissipate safely. When current flows through a resistor, heat is generated at a rate proportional to the power dissipated in the resistor. This heat must be carried off by the surrounding air as fast as it is generated. If it is not, the resistor will become excessively hot and will disintegrate. The maximum amount of power that a resistor can handle without excessive heating is called the *wattage rating* of the resistor. The wattage rating of any resistor must, of course, be at least as great as the actual wattage being dissipated by the resistor.

The wattage rating of a resistor and the actual wattage being dissipated by the resistor are two entirely different things. For example, consider a resistor that has a wattage rating of 10 W. This means that the resistor is *capable of* dissipating 10 W. It does *not* mean that the resistor *is* dissipating 10 W. For example, if a 20-Ω resistor is carrying 300 mA, the actual power dissipated is only $0.3^2 \times 20 = 1.8$ W. Since this is much less than its wattage rating, the resistor will not overheat.

Ratings assume ideal ventilation, which is seldom found in practice. Therefore it is a good idea to calculate the power that the resistor in question must dissipate and then use a resistor rated to dissipate 1½ to 2 times that much power. For example, if calculations show that a resistor must dissipate ½ W in a certain application, use a 1-W resistor.

The formula $P = I^2R$ shows that the power dissipated varies as the square of the current. Thus, if the resistance in a certain circuit is held constant and the current is doubled, power will increase to 4 times its original value. If the current increases by just 20 per cent, wattage increases not just by 20 per cent but by 44 per cent. If a resistor is subject to overcurrent in a certain application, the resistor must have a sufficient wattage rating to stand the highest wattage to be dissipated. The formula $P = \frac{E^2}{R}$ shows that the power dissipated by a resistor also varies as the square of the voltage. If the voltage increases by 20 per cent, power increases by 44 per cent. Again, this must be taken into consideration when selecting a resistor. For small increases in current and voltages (not over 20 per cent), you can assume the percentage increase in wattage to be twice the percentage increase in current or voltage. Thus a resistor subject to a 10 per cent overcurrent needs a 20 per cent larger wattage than would otherwise be the case.

Identical resistors may be connected in either series or parallel to increase the power dissipation capability. Whether connected in series or in parallel, the wattage rating of the group is equal to that of a single resistor multiplied by the number of resistors. Thus two 10-W, 50-Ω resistors connected in series will be equivalent to a 20-W, 100-Ω resistor. When the same two resistors are connected in parallel, they will be equivalent to a 20-W, 25-Ω resistor.

WHAT HAVE YOU LEARNED?

1. You want to charge a 25-V storage battery at a 5-A rate from a 100-V d-c line. You connect a resistor in series with the battery in order to drop the line voltage down to the 25 V required to charge the battery. The voltage across the resistor is (a) ________ volts, and the resistor should have a resistance of (b) ________ ohms. The power dissipated in the resistor is (c) ________ watts. You should use a resistor with a rating of about (d) ________ watts.

2. If 3 A flows through a 10-Ω resistor, the power dissipated in the resistor is (a) ________ watts. If the current is now doubled to 6 A, the power dissipated is (b) ________ watts. When the current is doubled, the

power increases to (c) ______ times the original value. If the current is tripled, the power will increase to (d) ______ times its original value. If the current is cut in half, the power will reduce to (e) ______ its original value.

3. If 3 A flows through a 10-Ω resistor, the voltage across the resistor is (a) ______ volts. If this voltage is doubled, the current will also (b) __________. We found in Problem 2 that doubling the current increases the power dissipation by 4 times. Since doubling the voltage doubles the current, doubling the voltage also increases the power dissipation by (c) ______ times. If the voltage is reduced to one-third its original value, the power dissipation will be reduced to (d) __________ of its original value.

4. If 3 A flows through a 10-Ω resistor, the power dissipation has been found in Problem 2 to be 90 W. If the resistance is doubled to 20 Ω and the current is kept at 3 A, the power dissipated will be (a) ______ watts. Hence, doubling the resistance (b) __________ the power dissipated. If the resistance is reduced to one-third its original value and the current is held constant, the power dissipated will be reduced to (c) ______ its original value.

5. If 30 V is connected across a 10-Ω resistor, the power dissipated is (a) ______ watts. If the resistance is doubled to 20 Ω, the power dissipated will be (b) ______ watts, assuming the voltage stays at 30 V. If the voltage does not change, reducing the resistance by one-half will (c) ______ the power dissipated.

ANSWERS

1. (a) 75 . . . 100 V − 25 V = 75 V, the amount that the voltage is dropped. (b) 15 . . . $R = \frac{E}{I} = \frac{75\text{ V}}{5\text{ A}} = 15\ \Omega$ (c) 375; (d) between 560 and 750

2. (a) 90; (b) 360; (c) four; (d) nine; (e) one-quarter

3. (a) 30; (b) double; (c) four; (d) one-ninth

4. (a) 180; (b) doubles; (c) one-third 5. (a) 90; (b) 45; (c) double

LESSON 2324-1

VOLTAGE, CURRENT, AND RESISTANCE IN D-C CIRCUITS

EXAMINATION

Circle the number of the correct answer for each question that follows. When you are finished, transfer the answers to the answer sheet by putting X's in the proper squares. When the graded answer sheet is returned to you, correct in this book any questions you may have missed. By doing so, you will have a record of the correct answers to all questions for review purposes.

✓1. In which network of Fig. 38 is the total resistance equal to two-thirds the resistance of one unit? Each resistance has the same value. 4

✓2. In which network of Fig. 38 is the total resistance equal to 3 times the resistance of one unit? 3

✓3. In which network of Fig. 38 is the total resistance equal to $1\frac{1}{2}$ times the resistance of one unit? HINT: Assume each resistance to be 10 Ω (or some other convenient value), and work out total resistance for each of the networks. 2

✓4. In which network in Fig. 38 is the total resistance equal to one-third the resistance of one unit? 1

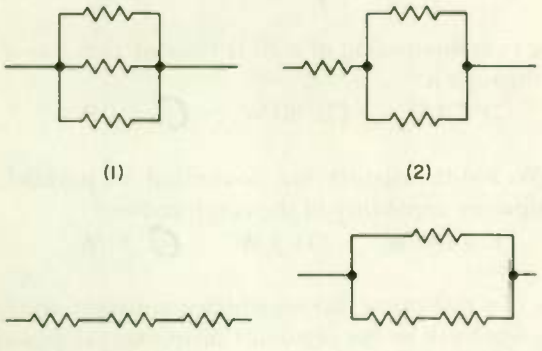
(1) (2)
(3) (4)

Fig. 38

E | I | R
P | I | E

✓ 5. What is the difference between electric power and electric energy?
(1) Power is expressed in watts, energy in kilowatts.
(2) Energy is work that is done, while power is the ability to do work.
(3) Power is work that is done, while energy is the ability to do work.
[✓ (4) Energy is the capacity to do work, while power is the rate of doing work.]

✓ 6. What is the unit of electric power?
(1) Ohm (2) Mho (3) Ampere (4) Volt [✓ (5) Watt]

✓ 7. What is the formula for determining the power in a d-c circuit when the current and voltage are known?
(1) $P = \frac{E^2}{R}$ (2) $P = IR$ (3) $P = I^2R$
(4) $P = \frac{E^2}{I}$ [✓ (5) $P = EI$]

✓ 8. What is the formula for determining the power in a d-c circuit when the voltage and resistance are known?
[✓ (1) $P = \frac{E^2}{R}$] (2) $P = IR$ (3) $P = I^2R$
(4) $P = \frac{E^2}{I}$ (5) $P = EI$

✓ 9. What is the formula for determining the power in a d-c circuit when the current and resistance are known?
(1) $P = \frac{E^2}{R}$ (2) $P = IR$ [✓ (3) $P = I^2R$]
(4) $P = \frac{E^2}{I}$ (5) $P = E^2$

125
50
.0625
20
1.2500

✓ 10. What is the heat dissipation of a 20-Ω resistor that has a current of ¼ A passing through it?
(1) 5 W (2) 2.5 W (3) 80 W [✓ (4) 1¼ W]

✓ 11. If two 10-W 500-Ω resistors are connected in parallel, what is the power-dissipation capability of the combination?
(1) 10 W (2) 100 W (3) 5 W [✓ (4) 20 W]

25 = 5 5
50 - 5 10

✓ 12. If the value of a resistance, across which a constant voltage is applied, is doubled, what will be the resultant proportional power dissipation?
(1) Doubled
(2) Four times
(3) One-quarter
[✓ (4) One-half]

25 = 5×5
12.5 = 5×2.5

13. If the value of a resistance to which a constant voltage is applied is halved, what will be the resultant proportional power dissipation?

✓

[✓ (1)] Doubled
(2) Four times
(3) One-quarter
[illegible] One-half

NOTE: Many of the following problems involve several steps. Even though you work the problems correctly, your third significant figure may frequently vary slightly from the choice we intend as the correct answer. This is because different practices in rounding off the intermediate steps will give slightly different results. If you, for example, obtain an answer of 4.17 and one of our choices is 4.19, this should be taken as the answer, assuming, of course, you have not made a mistake. However, the variation should not be more than 2 or 3 in the third significant figure. If you obtain 4.17 and our nearest choice is 4.10, you should recheck your work.

14. You want to replace the four resistors of Fig. 39 with a single resistor. What value should it be? It will be helpful to redraw this circuit so that the components in parallel and those in series will be more apparent. Notice that some of the choices are close together in value, which means that your calculations must be accurate to avoid making the wrong choice.

✓

[✓ (1)] 20.8 Ω
(2) 21.0 Ω
(3) 24.7 Ω
(4) 25.0 Ω
~~(5)~~ 100 Ω
~~(6)~~ 101 Ω

7.5
300/40
11
20
13.3
800/60

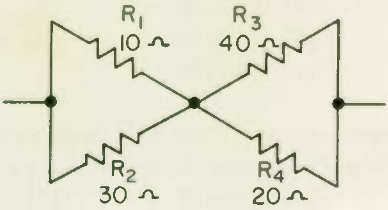

Fig. 39

15. You want to replace the four resistors of Fig. 40 with a single resistor. What value should it have? Choose from the selections for Question 14. Again your calculations must be accurate.

70 21~~00~~
30 1~~00~~

✓ (2)

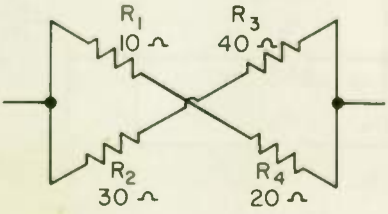

Fig. 40

6500
3500
325000
~~1~~ 19000
~~4~~ 227500000
10000

1137.5
2275
.5

2275
.5
11.375

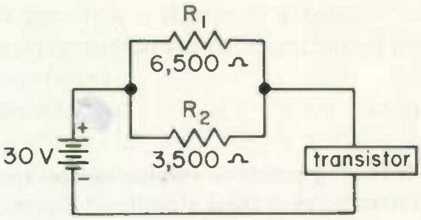

Fig. 41

16. If the transistor in Fig. 41 draws 5 mA, what is the voltage across the transistor?
(1) 5 V (4) 20 V (7) 50 V
[✓ (2) 11.4 V] (5) 23.6 V (8) None of the above
[✓ (3) 18.6 V] (6) 30 V

17. The current through R_1 in Fig. 42 is 6 mA. What is the lowest wattage rating that resistor R_1 should have, allowing 50 per cent over the calculated value as a safety factor?
[✓ (1) 0.216 W] (3) 1.44 W (5) 7.26 W
(2) 0.726 W (4) 2.16 W (6) 144 W
(7) None of the above

18. What is the lowest wattage rating that resistor R_2 in Fig. 42 should have, allowing 50 per cent over the calculated value as a safety factor?
(1) 0.036 W (4) 0.132 W (7) 1.452 W
(2) 0.072 W (5) 0.288 W (8) None of the above
[✓ (3) 0.108 W] (6) 0.430 W

19. What is the lowest wattage rating that resistor R_3 in Fig. 42 should have, allowing 50 per cent over the calculated value as a safety factor?
(1) 0.027 W (4) 0.108 W (7) 0.544 W
[✓ (2) 0.072 W] (5) 0.162 W (8) None of the above
(3) 0.0495 W (6) 0.363 W

.006 x4.000

24
.006
.144
.072
.216
.22

72
36
.108

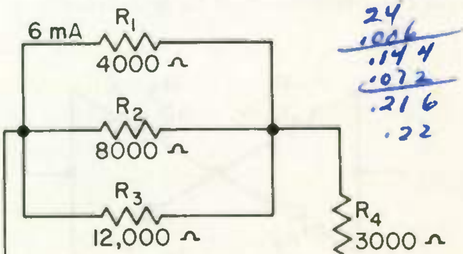

Fig. 42

6500
3500
3250000
195
2275~~0000~~
10000
1

2275
1005
11.375
30.000
18.625

4 ~~77~~

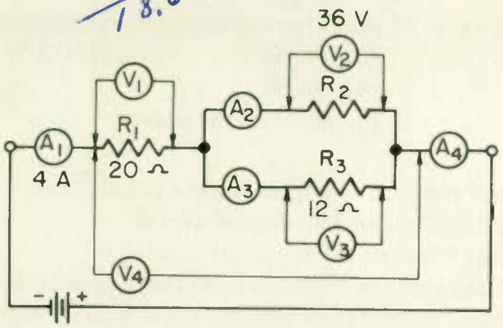

Fig. 43

20. Figure 43 shows a series-parallel circuit with ammeters and voltmeters connected to measure current and voltage in various parts of the circuit. Voltmeter V_2 reads 36 V, and ammeter A_1 reads 4 A. What does ammeter A_4 read?
(1) 2 A
(2) 3 A
[✓ (3) 4 A]
(4) 6 A
(5) 8 A
(6) 12 A
(7) None of the above

21. What does voltmeter V_3 in Fig. 43 read?
(1) 18 V
[✓ (2) 36 V]
(3) 48 V
(4) 72 V
(5) Can't be determined with information given
(6) None of the above

22. What does ammeter A_3 in Fig. 43 read?
(1) 1 A
(2) 2 A
[✓ (3) 3 A]
(4) 4 A
(5) 6 A
(6) 12 A
(7) None of the above

23. What does ammeter A_2 in Fig. 43 read? Choose an answer from the selections for Question 22.
(1)

24. What is the resistance of R_2 in Fig. 43?
(1) 9 Ω
(2) 12 Ω
[✓ (3) 36 Ω]
(4) 72 Ω
(5) Can't be determined from information given
(6) None of the above

25. What does voltmeter V_4 in Fig. 43 read?
(1) 36 V
(2) 44 V
(3) 80 V
(4) 100 V
[✓ (5) 116 V]
(6) Can't be determined from information given
(7) None of the above

100
100
100
98
96
5|494
98.5

26. What is the value of the power dissipated by resistor R_3 in Fig. 43?
(1) 48 W
[✓ (2)] 108 W
(3) 192 W
(4) 348 W
(5) 472 W
(6) None of the above

27. The resistance per foot of copper wire *A* is half that of wire *B* if
(1) wire *A* has twice the diameter of wire *B*.
(2) wire *A* has one-half the diameter of wire *B*.
[✓ (3)] wire *A* has twice the cross-sectional area of wire *B*.
(4) wire *A* has one-half the cross-sectional area of wire *B*.

28. The cross-sectional area of wire is generally measured in
(1) inches.
(2) mils.
(3) square inches.
(4) square mils.
[✓ (5)] circular mils.

29. The wire that would be twice as good a conductor as a No. 18 wire is
[✓ (1)] No. 15 wire.
[✓ (2)] No. 16 wire.
(3) No. 17 wire.
(4) No. 19 wire.
(5) No. 20 wire.
(6) No. 21 wire.

30. One reason for grounding electronic equipment is
[✓ (1)] so that there will be a reference point to which voltage measurements can be made.
(2) to increase the life of the battery used to power the circuit.
[✓ (3)] to reduce the amount of chassis wiring required.
(4) to make it possible to use a lower-voltage source of power.

31. To check the condition of a dry cell, you should
(1) disconnect the battery from its load and measure its voltage.
[✓ (2)] measure the voltage while the battery is delivering power to its normal load.
(3) measure the load current.
(4) divide the battery voltage by the load current. If this quotient is less than 10, the battery is near the end of its life.

32. As a dry cell nears the end of its useful life,
(1) its open-circuit voltage decreases.
[✓ (2)] its internal resistance decreases.
[✓ (3)] its internal resistance increases.
(4) its open-circuit voltage goes down and its internal resistance remains the same.

33. If the voltage of a source drops greatly when supplying appreciable current, then

(1) the voltage source is worthless for the purpose.
[✓ (2) the source is a high-resistance type.]
[✓ (3) the source is a low-resistance type.]
(4) the source is probably short-circuited.

34. In Fig. 44 the voltage at point *A* with respect to ground is
(1) − 75 V.
(2) − 45 V.
(3) + 15 V.
(4) + 30 V.
(5) + 45 V.
[✓ (6) + 75 V.]
[✓ (7) + 90 V.]

35. In Fig. 44 the voltage at point *C* with respect to ground is
[✓ (1) − 90 V.]
[✓ (2) − 15 V.]
(3) − 10 V.
(4) 0 V.
(5) + 10 V.
(6) + 15 V.
(7) + 75 V.
(8) + 90 V.

36. If you hold the leads of a voltmeter between points *B* and *C* in Fig. 44, the voltmeter will read
(1) 0 V.
(2) 15 V.
[✓ (3) 30 V.]
[✓ (4) 45 V.]
(5) 75 V.
(6) 90 V.

1.8

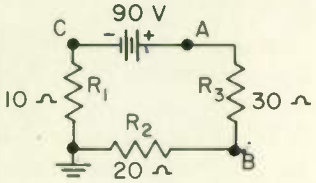

Fig. 44

END OF EXAM

Notes


CLEVELAND INSTITUTE OF ELECTRONICS

CLEVELAND INSTITUTE OF ELECTRONICS / CLEVELAND, OHIO

electronics

CLEVELAND INSTITUTE OF ELECTRONICS / CLEVELAND, OHIO

Audio Amplifiers and Equipment

2601-4

An AUTO-PROGRAMMED® Lesson

ABOUT THE AUTHOR

After his graduation from the City College of the City of New York (CCNY), Mr. Joseph J. DeFrance, the author of this lesson, stayed on as a laboratory assistant and instructor in the Electrical Engineering Department. During this period he earned an Electrical Engineering degree from CCNY. He then began to teach at the technical institute level and continue his graduate work.

During World War II, Mr. DeFrance was in charge of the revision of the electronic technician rate-training program of the U. S. Coast Guard at its training station in Groton, Conn. Following the war, he spent several years as the Chief Communications Engineer of the International Division of TransWorld Airlines (TWA). Upon leaving, he became Professor in the Electrical Technology Department for the New York City Community College, his current position.

Mr. DeFrance has written several textbooks . . . *Direct Current Fundamentals, Alternating Current Fundamentals, Electron Tubes and Semiconductors,* and *General Electronic Circuits.* He is a Senior Member of the IEEE.

This is an AUTO-PROGRAMMED* Lesson exclusive with the Cleveland Institute of Electronics. It is your assurance of the finest in technical education and training.

**Registered Trademark*

Accredited by the Accrediting Commission of the National Home Study Council

The Accrediting Commission has been approved by the U.S. Office of Education as a "nationally recognized accrediting agency."

CLEVELAND INSTITUTE OF ELECTRONICS

Audio Amplifiers and Equipment

By JOSEPH J. DEFRANCE
Professor, Electrical Technology Dept.
New York City Community College

2601-4

In this lesson you will learn...

Electronics technician at work on a two-way radio. Photo: Courtesy, Motorola Communications and Electronics, Inc.

Library of Congress Catalog Card Number: 63-12734

SECOND EDITION/Fifth Revised Printing/December, 1967.

2601-4

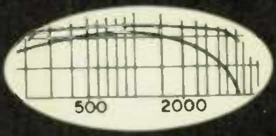

A chat with your instructor

Audio amplifiers are designed to amplify frequencies from approximately 20 to 20,000 cps. The name "audio" comes from the fact that amplifiers of this type were first used exclusively for amplifying sound signals. They now have many uses that do not involve sound, such as amplifying instrument readings or the outputs from servo systems.

Audio amplifiers are the most widely used of all electronic devices. They are found in the smallest transistor radios and hearing aids and in the largest military electronic equipment; they are integral parts of every TV set and of every satellite. In fact, wherever information such as sound, pressure, light intensity, or a meter reading is reproduced electronically, you are almost sure to find an audio amplifier.

Because the input signal to an amplifier is quite small, the audio amplifier must fill two functions: (1) It must amplify the low voltage of the input signal to a suitable value. (2) It must amplify the low power of the input signal to a high enough level to operate the loudspeaker.

The analysis of the audio amplifier will therefore be subdivided into two parts: *voltage amplifiers* and *power amplifiers*. Since audio amplifiers and equipment are most commonly used for the amplification of sound, a good starting point is a brief study of sound waves.

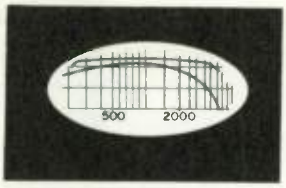

Audio Amplifiers and Equipment

1 SOUND WAVES . . . Air presses up, down, and sideways on everything it comes in contact with—walls, ceilings, and floors; hands, eyes, and ears—with a force that is normally 15 lb per sq in.

Any *sound* that is created, whether it is speech, music, ringing of a bell, or just noise, disturbs this air pressure and sets up sound waves. The louder the sound, the greater the change in air pressure, or the greater the amplitude of the sound wave.

Sound waves travel outward from the source in all directions, alternately rising and falling much as waves on the surface of a pond rise and fall after a stone has been thrown into the water.

We can represent a *cycle* of air-pressure changes by the pressure versus time curve shown in Fig. 1. When these varying air pressures strike the listener's ear, they register as sounds.

If a sound causes air pressure to rise and fall 100 times per second, it is said to have a *frequency* of 100 cps (cycles per second). The note of a whistle which produces 10,000 cycles of pressure variations in one second has a frequency of 10,000 cps.

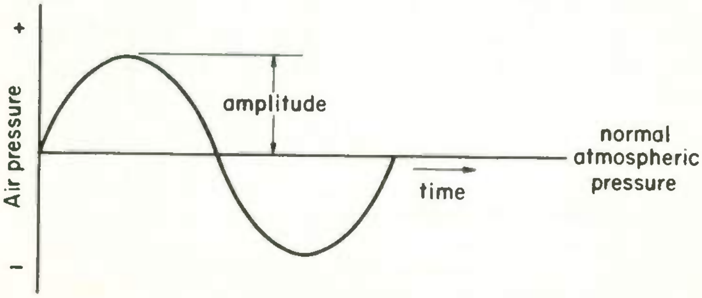

Fig. 1 **Sound waves. Sound is transmitted as pressure changes through air.**

The audio-frequency range is generally considered to extend from 20 to 20,000 cps, although sound waves above 15,000 cps are not audible to most people.

For most practical purposes, the frequency of a sound determines its *pitch.* Thus, a note of 100 cps, which is toward the low end of the audio-frequency range, would be recognized as a note of low pitch. A note of 10,000 cps, which is in the upper range of most men's hearing, would be heard as a sound of high pitch.

WHAT HAVE YOU LEARNED?

1. Sound travels by means of __________ in air pressure.

2. (a) The louder the sound, the __________ the change in air pressure. (b) The louder the sound, the greater the __________ of the sound wave.

3. The pitch of a sound corresponds to the __________ of the sound wave.

4. Assume an average person can hear sounds over a frequency range extending from 50 to 13,000 cps; then a 75-cps signal would have a (a) __________ pitch and a 12,000-cps signal would have a (b) __________ pitch.

5. When struck, a certain piano key produces a pitch of 2000 cps with overtones at the second (4000 cps), third (6000 cps), and fourth harmonics. To amplify the sound without distortion, an amplifier must have a frequency range of at least __________ cps to __________ cps.

ANSWERS

1. Changes 2. (a) Greater; (b) amplitude
3. Frequency 4. (a) Low; (b) high
5. 2000 cps to 8000 cps . . . The frequency of the fourth harmonic is 8000 cps. Therefore, the frequency of the sound caused by striking the piano key ranges from 2000 to 8000 cps, and the amplifier must be able to pass all of these frequencies without distortion.

INTERSTAGE COUPLING METHODS

The stages of a complete audio amplifier can be divided into two types, *voltage* or *current amplifier stages* and *power amplifier stages*. The purpose of a voltage or current amplifier stage is to increase the amplitude of the signal voltage or current. With transistors the current amplitude is increased, and with vacuum tubes the voltage amplitude is increased. The results are equivalent, since in both cases the signal amplitude is increased. The distinguishing characteristic of a voltage or current amplifier is that it is not designed to deliver more than a small amount of power to its load.

The purpose of a power amplifier stage is to increase the power in the signal. It is used for operating a load that requires considerable power, such as for a loudspeaker or for an ultrasonic crystal for industrial cleaning.

2 AMPLIFIER COUPLING . . . Because the level of the input signal fed to an audio amplifier is generally quite low, one or more stages of voltage or current amplification are needed before sufficient signal amplitude can be obtained to drive a power amplifier stage.

You are already familiar with the basic circuits of the voltage or current amplifier stage. The problem now is how to interconnect two or more stages in order to obtain the necessary gain.

The coupling network must perform two functions: (1) It must transfer the output signal, or a-c component, from one stage to the input of the next stage. (2) It must block d-c voltages in one stage from interacting on the next stage.

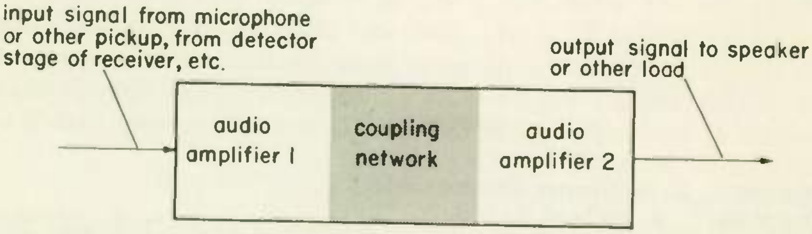

Fig. 2 **Amplifier coupling. The coupling network between two amplifiers must (a) transfer the output signal from amplifier 1 to the input of amplifier 2 and (b) prevent the interaction of d-c voltages between the two stages.**

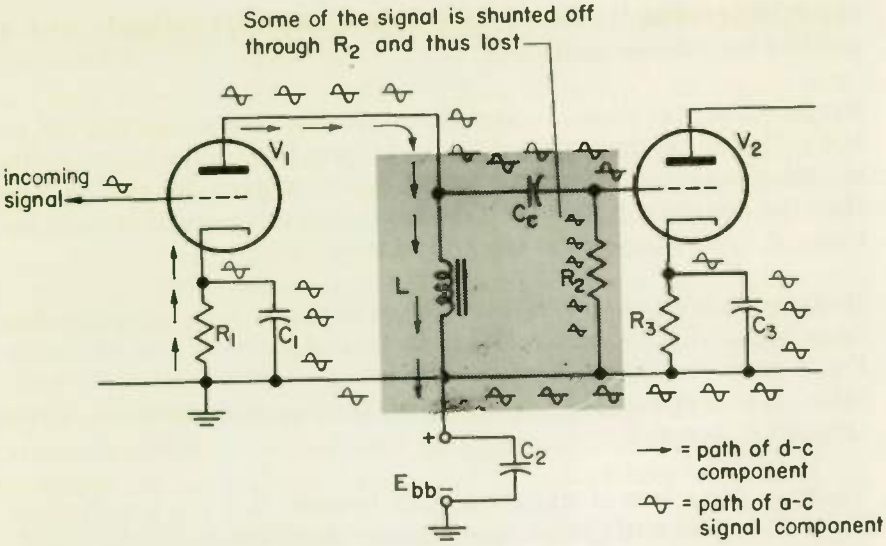

Fig. 3 **Impedance coupling.**

Figure 2 illustrates the function of the coupling network. Four basic coupling methods are used to perform these functions. They are (1) resistance (*RC*) coupling, (2) transformer coupling, (3) impedance coupling, and (4) direct coupling. Each of these methods will be discussed in later topics.

3 IMPEDANCE COUPLING . . . In Fig. 3 the signal is transferred from the output of V_1 to the grid of V_2 by means of the coupling network consisting of L, C_c, and R_2. It is called impedance coupling because of the use of the inductor L in the plate circuit of the tube.

The operation of the circuit shown in Fig. 3 is largely familiar to you from a preceding lesson, but it will be reviewed here. The signal applied to the grid of V_1 is amplified, and the amplified signal passes from the plate circuit of V_1 through capacitor C_c to excite the grid of tube V_2. The signal, being a-c, passes readily through the coupling capacitor C_c but is blocked by inductor L, so that the only path it is free to follow is the one to the grid.

A tube will not operate as an amplifier unless a positive d-c voltage is applied to its plate. The use of inductor L makes it possible to apply this voltage without making an undesired path for the a-c signal. Capacitor C_c is necessary to block the d-c voltage so that it will not reach the grid of V_2, since a tube does not amplify properly with a positive d-c voltage on its grid.

Proper tube operation requires that a d-c bias voltage be applied to the grid. For this purpose a d-c current path is required between the source of bias voltage and the grid. Resistor R_2 provides this path so that the negative d-c bias voltage developed across cathode bias resistor R_3 can be applied to the grid of tube V_2.

Resistor R_2 is necessary, but it reduces the gain of the amplifier because some of the signal voltage will be lost through it as shown in Fig. 3, thus weakening the signal. By using a high value for R_2 (typically, 1 megohm), the weakening of the signal because of losses through R_2 is small.

There is also a loss of signal strength because it is not practical to make L a sufficiently large reactance to block nearly all the signal. Therefore, much of the signal is shunted through L, and the signal reaching the grid of V_2 is thereby weakened. The loss of gain because of signal loss through L is greater than the loss due to R, because it is not practical to use a choke with a reactance as high as the resistance of R_2.

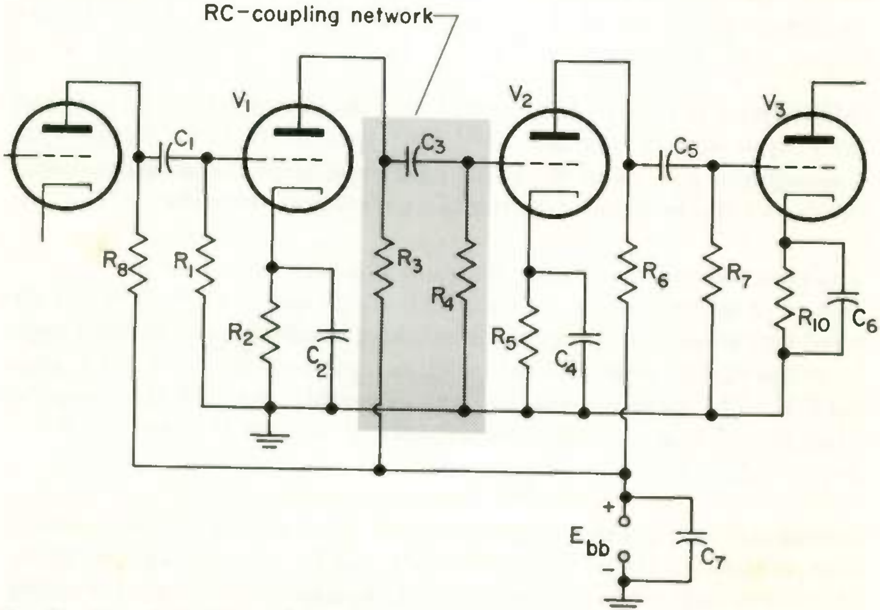

Fig. 4 **Two-stage RC-coupled amplifier.**

4 *RC* COUPLING . . . The coupling network of Fig. 4 is the same as the impedance coupling network of Fig. 3, except that resistor R_3 has been substituted for the choke L. This method of coupling is known as *resistance coupling,* or as *RC coupling.*

Since R_3 of Fig. 4, like L of Fig. 3, offers a high impedance to the a-c signal, the principles of operation of the two coupling methods are identical. Unfortunately, however, R_3 also offers a high impedance to the d-c current that must be furnished by the power supply E_{bb} through this resistor to the plate of V_1. The voltage of E_{bb} must be much higher than required for impedance coupling in order to make up for the d-c voltage drop across R_3.

WHAT HAVE YOU LEARNED?

1. In Fig. 4, d-c plate voltage is kept out of the grid circuit of the following stage by (a) blocking capacitors ________, ________, and ________. (b) The bypass capacitors that keep the a-c signal out of the cathode bias resistors are ________, ________, and ________. (c) The signal coupling capacitors are ________, ________, and ________.

2. In Fig. 4, (a) resistor R_2 develops the ________ ________ for V_1 and (b) resistor ________ serves a similar function for V_2. (c) The purpose of R_3 is to ________________________________ ________, and (d) resistors ________ and ________ serve a similar function. (e) The signal is forced from the plate of V_2 through C_5 to the grid of V_3 by the blocking action of ________, and (f) resistors ________ and ________ serve a similar function.

3. In Fig. 4, (a) before signal is applied, the grid potentials of V_1 and V_2 with respect to ground are ________ volts and ________ volts. (b) The grid biases (that is, the grid potentials with respect to cathodes) are *(negative) (positive) (zero).*

4. (a) In Fig. 4, if capacitor C_3 becomes shorted, what effect will this have on the circuit? (b) There is some signal loss in C_3, because its reactance is not zero. If the value of C_3 is reduced, what effect will be noted? (c) This effect will be greater at *(high) (low)* frequencies. (d) If the value of C_3 is increased, what effect will be noted?

5. In Fig. 4, (a) trace the path for the d-c component of plate current for tube V_2 and (b) trace the path for the a-c signal component of plate current.

6. The phase difference between the input signal voltage to the grid of V_1 and that to the grid of V_3 is ________ degrees.

ANSWERS

1. (a) C_1, C_3, and C_5; (b) C_2, C_4, and C_6
   (c) C_1, C_3, and C_5 . . . They couple the a-c signal to the next stage.
2. (a) Grid bias; (b) R_5
   (c) Conduct the grid bias voltage developed across R_2 to the grid of V_1.
   (d) R_4 and R_7; (e) R_6; (f) R_8 and R_3

3. (a) Zero, zero . . . The grids are connected to ground via the grid resistors R_1 and R_4. Since there are no currents through these resistors, the *IR* drop across them is zero.

(b) Negative . . . Because the cathodes are at a positive potential with respect to ground, the grids are negative with respect to their cathodes.

4. (a) The d-c plate potential would be applied to the grid of V_2. The resulting high positive bias would cause tube V_2 to burn out.

(b) Reducing the capacitance of C_3 will increase the reactance of C_3 to a-c signals. Therefore, there will be a larger signal voltage drop across C_3, which will reduce the signal applied to the grid of V_2 and thus reduce the gain of the system.

(c) Low . . . The reactance of a capacitor is greater at low frequencies, which results in greater signal loss.

(d) Increasing the capacitance of C_3 will reduce the reactance of C_3 to a-c signals. Therefore, C_3 will present less reactance to a-c signals at low frequency and thus improve low-frequency response of the amplifier.

5. (a) The d-c path is from ground (the negative side of the power supply) through R_5, through the tube, through R_6 to the positive side of the power supply, and through the supply back to ground.

(b) The a-c path is from ground, through C_4, and through the tube, at which point the current divides. Some current goes through R_6 and C_7 back to ground, while the rest flows through C_5 and R_7 to ground. Signal current flow reduces gain, so that R_6 and R_7 are made as high as practical. The less the signal current, the higher the signal voltage that reaches the next grid.

6. Zero . . . There is a 180° phase shift between input and output signals of each stage. Thus, total phase shift for two stages is 360° (equal to 0°), so that the two voltages are *in phase*.

5 *RC* COUPLING FOR PENTODE AMPLIFIERS . . . *RC* coupling is used equally well with pentodes. The circuit for a multistage pentode *RC*-coupled amplifier, shown in Fig. 5, follows the same general principles as those discussed for triodes. In addition, provision must be made for the added grids: the suppressor and screen.

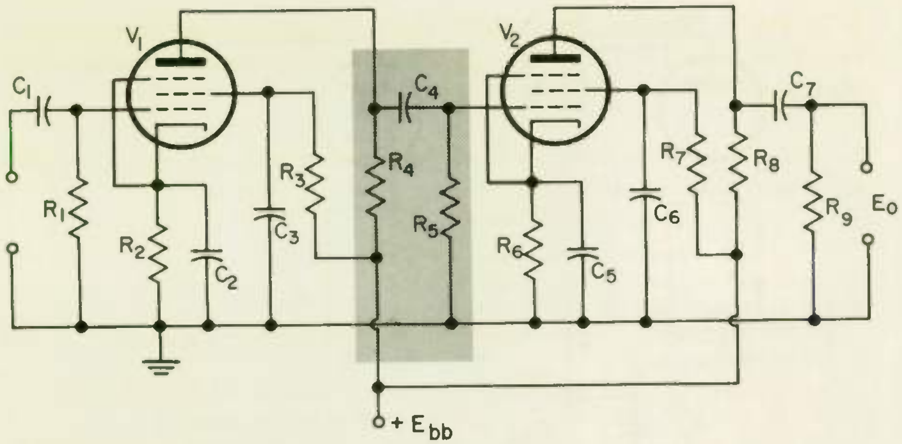

Fig. 5 A two-stage RC-coupled pentode amplifier.

This is readily done by tying the suppressor to the cathode and by using a suitable screen bias dropping resistor and bypass capacitor, R_3 and C_3, for the screen of V_1.

The coupling network between tubes is the same as shown in Fig. 4. However, because of the higher internal resistance of the pentode, higher values are used for the plate and grid resistors. Plate resistors as high as 0.47 megohm and grid resistors as high as several megohms are used.

6 TRANSFORMER COUPLING . . . Transformer coupling is sometimes used to interconnect audio amplifier stages. Such a circuit is shown in Fig. 6.

Both the d-c plate current and the a-c signal pass through the primary. The a-c signal in the primary induces a signal voltage in the secondary winding, which is applied to the grid of the following stage. Since transformers do not transfer d-c from primary to secondary, the d-c plate supply voltage is isolated from the grid of V_2.

The transformer itself provides a further voltage gain because of its step-up action. In fact, of the four coupling methods discussed, transformer coupling provides the highest stage gain. Greater gain per stage means that fewer amplifier stages are needed for a given overall gain as compared, for example, with *RC* coupling. Practical step-up ratios for *interstage transformers* are limited to about 3 to 1.

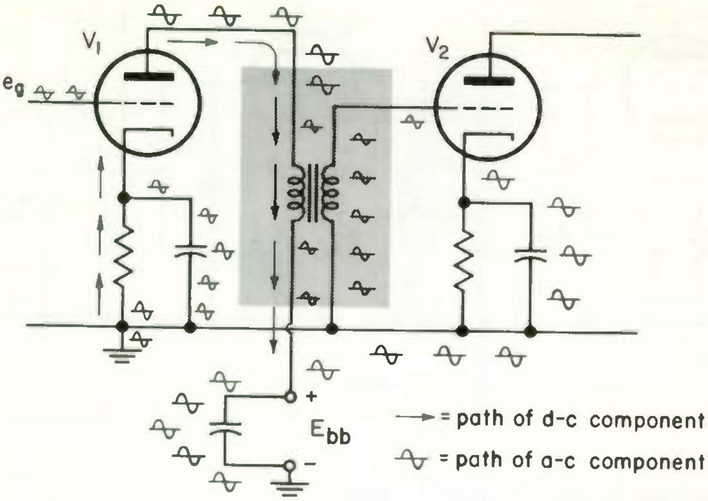

Fig. 6 Transformer coupling.

Transformer coupling offers a second advantage. Because the primary winding has a very low d-c resistance, there is only a negligible voltage drop between the supply voltage E_{bb} and the plate of the tube. Therefore, it is possible to obtain good tube performance with much lower supply voltages than are required when *RC* coupling is used. Impedance coupling also has this advantage.

Transformer coupling also has its disadvantages, however. The transformers needed are heavy, bulky, and quite expensive. Also, far better frequency response can generally be obtained with *RC* coupling. Although special high-fidelity transformers are available, a single unit may cost more than a 5-tube a-c/d-c radio.

WHAT HAVE YOU LEARNED?

1. It is desirable to operate a portable amplifier circuit from a 45-volt B battery. Two coupling methods suitable for this service are ____________ and ____________.

2. In Fig. 6, the tube has a gain of 18 and the transformer has a step-up ratio of 2.5 to 1. If a steady d-c signal of 2 volts is applied to the grid of V_1, the signal voltage applied to the grid of V_2 is __________ volts.

3. In Problem 2, the input signal is changed to 0.8 volt rms at 1000 cps. The grid input to V_2 is then ________ volts.

4. The maximum step-up action obtainable with impedance coupling is ________.

5. If E_{bb} in Fig. 3 is 90 volts, the approximate value for the d-c plate potential of V_1 is ________ volts.

ANSWERS

1. Transformer and impedance . . . With these coupling methods nearly all of the B battery voltage is applied to the plate, so that a relatively low B battery voltage can be used.
2. Zero . . . The d-c signal produces a steady plate current, and no voltage is induced in the secondary winding.
3. 36 volts rms . . . $0.8 \times 18 \times 2.5 = 36$
4. None . . . Impedance coupling does not use a transformer.
5. 90 volts . . . Because of the low d-c resistance of the choke, the d-c voltage drop across the choke is negligible.

7 DIRECT COUPLING . . . In each of the preceding coupling circuits, the gain decreases appreciably for signals of very low frequency, so much so that the circuits are not practical at frequencies below 20 cps. With *RC* coupling, this is caused by the increased reactance of the coupling capacitor at low frequencies, which, like a high resistance in its path, weakens the signal. With transformer coupling, the circuit gain is reduced for low-frequency signals because transformers do not operate with d-c and operate only poorly at low frequencies. With impedance coupling, the reactance of the inductor at low frequencies is too low to block the signal, and the output voltage drops off because the increased reactance of the coupling capacitor further weakens the signal reaching the following stage. Therefore, none of these coupling circuits are suited for amplification of d-c signals or of a-c signals below 20 cps.

One circuit that is designed particularly for amplification of low-frequency or d-c signals is the *direct-coupled* amplifier of Fig. 7. It is often called the *Loftin-White circuit,* after its orginators.

In Fig. 7 notice that neither transformers nor capacitors are used to keep the d-c component of the output signal from V_1 blocked off from the next grid. Consequently, the d-c grid potential of V_2 is identical to the d-c plate potential of V_1, or + 150 volts. Notice also that the cathode of V_2 is at + 153 volts. Since the voltage on the grid is 3 volts

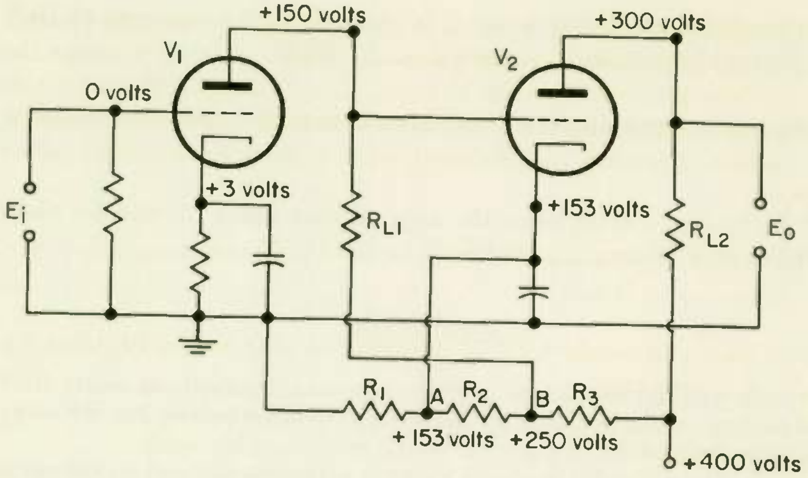

Fig. 7 **A direct-coupled amplifier.**

less than the cathode voltage, the tube is operating with a grid bias of −3 volts.

Remember that it is not the voltage on the grid with respect to ground that determines the grid bias; rather it is the voltage on the grid with respect to the cathode, which in this case is 3 volts. That is how much a voltmeter would read when connected between grid and cathode.

Although this circuit furnishes excellent low-frequency response, it is subject to stability problems. A change in power supply voltage, in voltage divider values, or in the value of plate load resistor R_L can upset the bias of V_2 and thereby cause distortion. Consequently, direct coupling is used only where the amplification of d-c and very low frequencies is required, as in analog computers.

WHAT HAVE YOU LEARNED?

1. An amplifier for an industrial control circuit must amplify both d-c and low-frequency error voltages. A ____________-coupled amplifier should be used.

2. Referring to Fig. 7, (a) the grid bias on V_1 is ________ volts, and (b) the plate voltage applied to V_1 is __________ volts. (c) The plate potential for V_1 is less than the supply voltage of 250 volts because of the drop across ________ .

(d) The grid potential of V_2 is ________ volts with respect to ground, and (e) this high positive grid potential *(will) (will not)* damage the tube. (f) The plate voltage for V_2 is ________ volts, and (g) for this same plate voltage and the same drop across the plate load resistor, *(RC) (direct)* coupling can be used with a more economical power supply.

3. Four types of coupling that may be used with audio amplifiers are: (a) ____________, (b) ____________, (c) ____________, (d) ____________.

4. The most commonly used of the types of coupling in Problem 3 is ________ coupling.

5. The highest voltage gain per stage is obtainable with ________ coupling.

6. The best frequency response is most readily obtained with (a) ____________ coupling, and the second best with (b) ________ coupling.

ANSWERS

1. Direct . . . No other amplifier will amplify a d-c voltage.
2. (a) -3 . . . The grid is 3 volts negative *with respect to the cathode.*
   (b) 147 volts . . . The plate is only 147 volts more positive than the cathode.
   (c) R_{L_1} . . . There is a drop of 100 volts across the plate load resistor R_{L_1}.
   (d) $+150$ volts . . . It is the same as the plate potential of V_1 with respect to ground.
   (e) Will not . . . The cathode of V_2 is at $+153$ volts, so the grid *bias* is again -3 volts, the same as for V_1.
   (f) 147 volts . . . The plate voltage is the voltage between plate and cathode, which is $300 - 153 = 147$ volts.
   (g) *RC* coupling . . . *RC* coupling would require a plate supply voltage of 147 volts for the tube, plus 100 volts across R_{L_2}, or a total of 247 volts. Notice that the direct-coupled circuit requires 400 volts for the second tube.
3. (a) *RC;* (b) transformer; (c) impedance; (d) direct   4. *RC*
5. Transformer . . . The transformer supplies a stepped-up voltage gain in addition to the tube gain.   6. (a) Direct; (b) *RC*

8 TRANSISTOR AMPLIFIER . . . Transistor amplifier stages can also be operated in cascade when more gain is required than is obtainable from a single stage.

As with vacuum tubes, any of the four basic coupling methods—*RC*, transformer, impedance, or direct—can be used for interconnecting the stages. However, *RC* coupling is again the most commonly used circuitry.

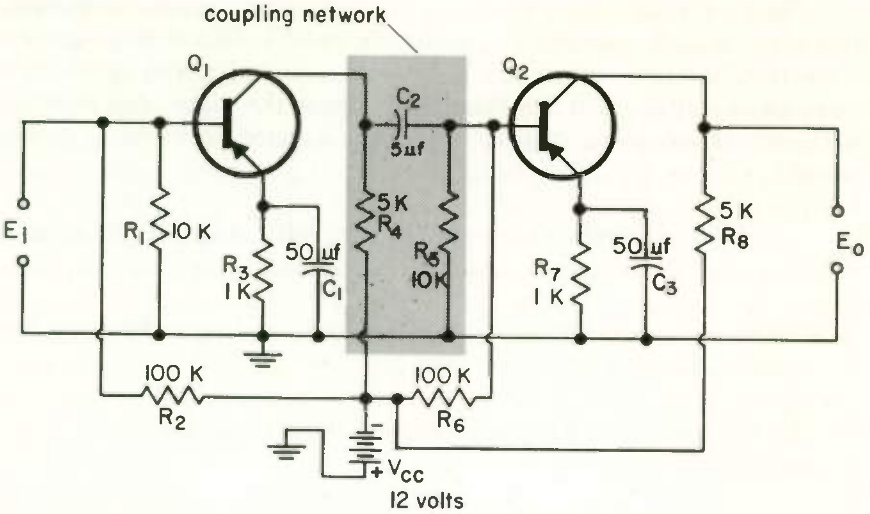

Fig. 8 Two-stage transistor amplifier using RC coupling.

With *RC* coupling, the highest power gain is obtained when the transistor is connected in the common-emitter configuration. A two-stage amplifier of this type is shown in Fig. 8. If NPN transistors are used in place of the PNP transistors shown, the polarity of the voltage source V_{cc}, and also the polarity of all electrolytic capacitors, should be reversed.

Notice the similarity between this circuit and the equivalent vacuum-tube circuit of Fig. 4. Remembering that the collector in a transistor corresponds to the plate of a tube, the base corresponds to the grid, and the emitter corresponds to the cathode, the connections and components in the two circuits are the same, except for the addition of R_2 and R_6 in the transistor circuit. However, the component values in a transistor amplifier are much different than the corresponding tube components. This is because transistors require much different values of current and voltage for proper operation than tubes require.

For the same reason, the part played by some of the components in transistor circuits is different than the part played by the corresponding components in tube circuits.

Resistors in a tube circuit that correspond to R_3 and R_7, Fig. 8, are used to obtain grid bias. Emitter resistors R_3 and R_7 are used for an entirely different purpose, namely, for circuit stabilization. Unlike tube characteristics, transistor operating characteristics change considerably with temperature variation. Resistors R_3 and R_7 help compensate for these changes, so that the circuit will operate well over a wide temperature range. Capacitors C_1 and C_3 serve the same purpose as the corresponding cathode bypass capacitors in tube circuits, namely, to pass direct to ground the signal component of the emitter current so that it does not pass through R_3.

Base-emitter bias for Q_1 is obtained from the voltage-dividing network consisting of R_1 and R_2 in series between battery V_{cc} and ground with the base connected at the junction of the two resistors. Since R_2 is 10 times the resistance of R_1, the base-emitter bias voltage is only a small fraction of V_{cc}. This method of providing base-emitter bias also helps stabilize the circuit against erratic operation caused by temperature changes.

To maintain good low-frequency response in spite of the low input resistance of transistor Q_2, which is on the order of only 1000 ohms, the value of the coupling capacitor C_2 must be higher than needed for a vacuum-tube amplifier. Values from 2 to 10 μf are common. Because of the high values needed, electrolytic capacitors are generally used.

WHAT HAVE YOU LEARNED?

1. The polarity of the base potential with respect to ground of transistor Q_1 in Fig. 8 is *(positive) (negative)*.

2. This polarity produces *(forward) (reverse)* bias of the base-emitter junction.

3. If a positive-going signal is applied at the input of Q_1, (a) base current *(increases) (decreases)*, (b) collector current *(increases) (decreases)*, and (c) collector potential becomes *(less) (more)* negative.

4. There is a ________ - degree phase difference between the input and output signals in the circuit of Fig. 8.

5. In *RC*-coupled transistor circuits, the low input resistance of the next stage requires the use of a *(large) (small)* capacitance value for the coupling capacitor.

6. In Fig. 8, if C_2 is an electrolytic capacitor, the left-hand plate should have a ____________ polarity.

7. In the circuit of Fig. 8, if NPN units were used, (a) the emitter arrows should point ______________, (b) the power supply polarity *(should) (should not)* be changed, and (c) capacitor C_2 *(should) (should not)* be reversed. (d) The input and output signals would have a __________ -degree phase difference.

8. Resistor R_7, Fig. 8, serves for circuit _____________.

ANSWERS

1. Negative . . . Through resistor R_2 the base is connected to the negative terminal of the power supply.
2. Forward . . . This is a PNP transistor. Negative polarity on the N-type base, with positive polarity on the P-type emitter, will cause conduction.
3. (a) Decreases . . . Since the base bias is negative, the positive signal reduces the bias and, therefore, the base current.
   (b) Decreases . . . The transistor is being driven toward cutoff.
   (c) More (negative) . . . There is less drop across R_4, and the collector potential approaches the full supply voltage. There is thus a 180° phase shift between input and output.
4. Zero . . . In the answer to Problem 3 we noted a 180° phase reversal between input and output of *one* transistor. For a two-stage circuit, the phase shift is 360°, or back to zero.
5. Large 6. Negative . . . It is connected through R_4 to the negative side of the power supply.
7. (a) Outward (b) Should . . . Ground the negative side and feed the positive potential to R_4. (c) Should . . . The positively marked side should be connected to R_4. (d) Zero . . . Each transistor still produces a 180° phase shift for a total of 360°, or 0°.
8. Stabilization . . . For example, any bias shift that would cause the collector current to increase will cause more current to flow through R_3. Since this current flows *down,* the emitter becomes more negative. This reduces the forward bias and brings the collector current back toward the original value.

9

MULTISTAGE AMPLIFIER PROBLEMS . . . In a multistage amplifier, certain problems arise that would not occur in a single stage. One cause of trouble is the common power supply. To see how trouble can occur, let us examine the three-stage amplifier in Fig. 9(a).

At very low frequencies, the impedance of the power supply filter capacitor C_1 becomes important because the impedance of this filter becomes relatively high. For example, at 8 cps, the reactance of the capacitor is about 1000 ohms.

When a signal is applied to the grid of V_1, it is amplified by the amplifier, resulting in an a-c component in the plate circuit of V_3 as shown by the double-headed arrows. Although the purpose of Rb_3 is

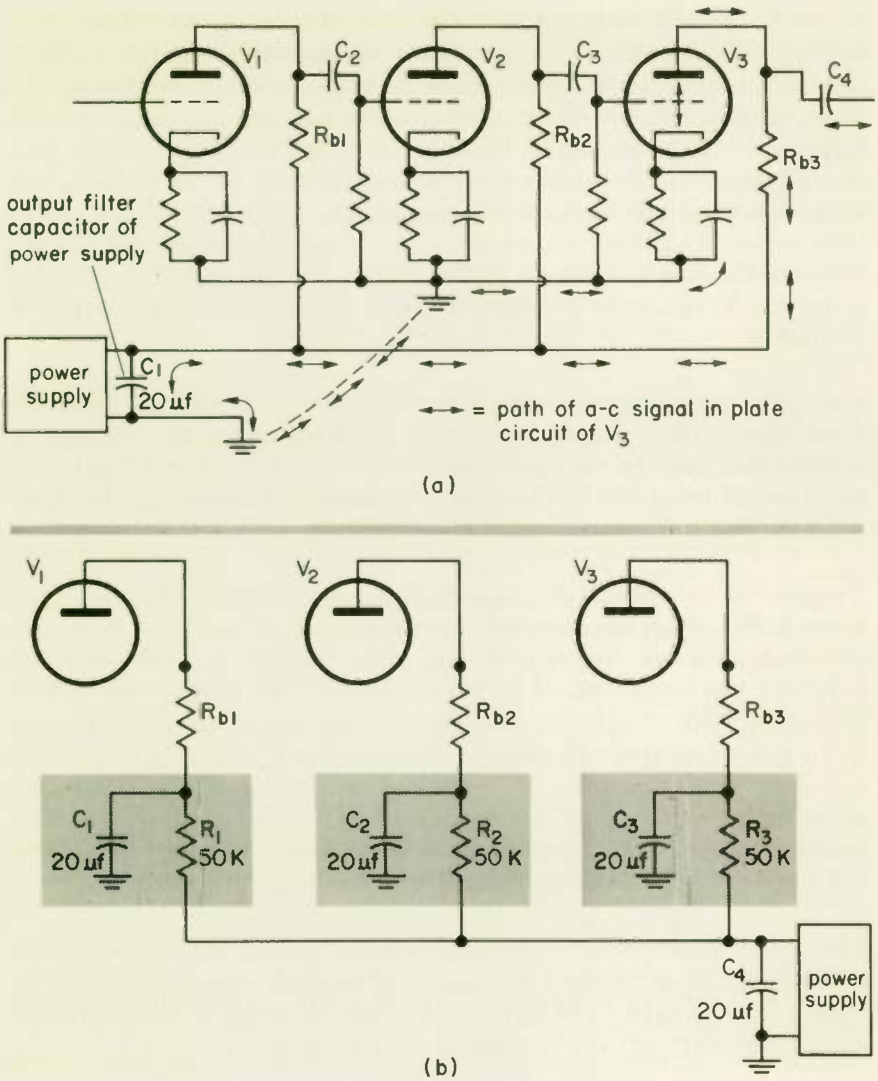

Fig. 9 Multistage amplifier and the use of decoupling filters.

to block this a-c component so it will go through C_4 to the next stage, it is not practical to make the resistance of R_{b_3} high enough to completely block the a-c component. The part of the a-c component of the plate current that gets through R_{b_3} takes the path indicated by the double-headed arrows.

Since this current passes through C_1, and since C_1 has considerable reactance at low frequencies, an a-c signal voltage will be developed across C_1. This voltage is impressed upon the d-c power supply voltage, giving the latter an a-c component at the signal frequency. Since the same power supply supplies the V_1 plate circuit as well as the V_3 plate circuit, the a-c signal that it carries passes through R_{b_1} and then C_2 to reach the grid of V_2. This a-c component reaching the grid of V_2 because of the common power supply may be very small, but after it is amplified by V_2 and V_3 it becomes quite large. This will in turn cause a greater a-c voltage to be developed across C_1 and increase the feedback signal to the grid of V_2. Consequently the output from V_3 increases further, etc. The result is that the amplifier oscillates.

Since the power supply impedance becomes large enough to cause significant voltage drops only at very low frequencies, this oscillation is sustained only at very low frequencies and results in a "put-put-put" sound from the loudspeaker. Because of the sound, this malfunction has come to be called *motorboating*.

To prevent this effect, *decoupling filters,* as shown in the darkened areas of Fig. 9(b), are inserted into each plate return lead. With decoupling filters in the circuit, the plate current of each tube, on reaching the lower end of its plate resistor, can take either of two paths: through the 50,000-ohm resistor and power supply capacitor C_4 to ground or through decoupling capacitor C_1 directly to ground.

Even at a frequency as low as 8 cps, most of the current will flow through capacitor C_1 to ground, because the impedance of C_1 is less than one-fiftieth of the impedance of the alternate route.

The reduced current flow through the power supply capacitor reduces the voltage drop across this capacitor to such a level that it is no longer large enough to be significant. Thus, decoupling filters prevent interaction through the common power supply.

Another frequent malfunction in a power supply which you should understand is the presence of *hum*. Although hum can occur in a single-stage amplifier, it is seldom loud enough to be disconcerting. When it occurs in an early stage of a multistage amplifier, however, it can drown out the desired signal.

Hum is most commonly caused by the breakdown of capacitors in the power supply filter circuit. Without sufficient capacitance in the power supply filter, a-c ripple voltage (120 cps from a full-wave power supply operating from a 60-cycle source) will be applied to each tube and amplified by the following stages. The remedy, of course, is to replace the defective filter capacitors.

Another fairly common cause of hum is interaction between the cathode and heater of a tube. Since heaters are operated from the a-c line, interaction will introduce some 60-cycle voltage into the input circuit of the defective tube, which results in hum.

There are many other possible causes of hum; they include stray magnetic or electric fields that enter an amplifier through wires or by electromagnetic induction. Ground loops formed by long ground leads between circuits, improper grounding, and improper shielding of tubes are among other possible causes.

DISTORTION

The output voltage from an amplifier should be an exact, but amplified, replica of the input signal. Any deviation in waveform is *distortion.*

10 FREQUENCY DISTORTION . . . Variation of gain with frequency is known as *frequency distortion.* Thus, if a struck piano key produces a fundamental note of 2000 cps and overtones (harmonics) at 4000, 6000, and 8000 cps, the amplifier should amplify each of these fre-

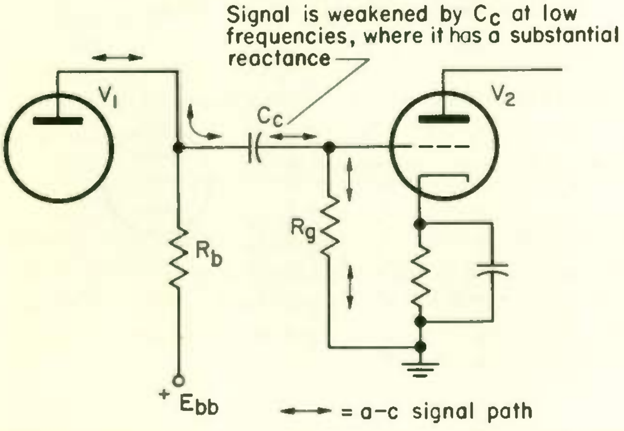

Fig. 10 Unless R_g is large compared to the reactance of C_c, much of the signal voltage will be lost across C_c.

quencies equally. If an amplifier has the same gain at each of these frequencies—50, for example—each component of the piano note will be amplified equally and the true quality of the sound will be preserved.

However, if gain varies—for example, if gain is 25 at 2000 cps, 50 at 4000 cps, 50 at 6000 cps, and 25 at 8000 cps—there will be frequency distortion. In this example, the 2000- and 8000-cps sounds will be amplified only half as much as the 4000- and 6000-cps sounds.

Let us examine distortion with reference to an RC-coupled amplifier as shown in Fig. 10. Notice that the full a-c component of V_1 plate voltage is not available to the grid of V_2 because of the voltage drop across coupling capacitor C_c. Usually, reactance X_c is small compared to the resistance of R_g and the voltage drop is negligible. But at low frequencies X_c increases, the voltage drop increases, and the loss becomes appreciable. To avoid this loss of low-frequency signal, large capacitance values may be used. The larger the capacitor, the better the low-frequency response of the amplifier.

At the high-frequency end, shunt capacitance effects combine to impair the response. These shunt capacitances consist of the output capacitance C_o of the tube, the input capacitance C_i of the next tube, and stray capacitance C_s of the sockets and wiring, as shown in Fig. 11. These capacitances are present at all frequencies, but since the total shunt capacitance is generally small, the reactance is high, and the shunting effect is negligible.

However, as frequency is increased, the reactance is decreased and the shunting effect becomes more important as more of the high-

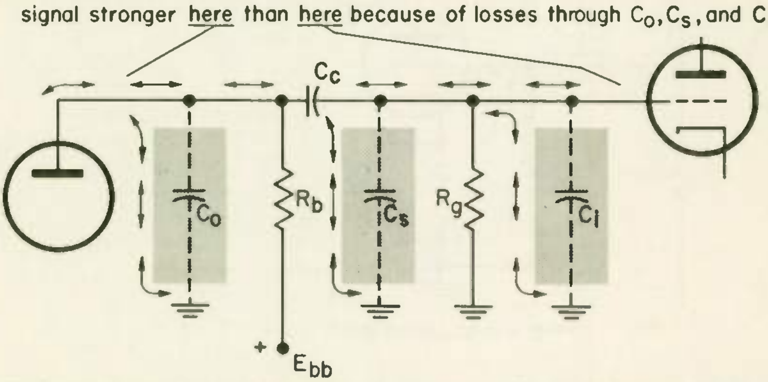

Fig. 11 **Unavoidable shunt capacitance in an RC amplifier. At high frequencies, much of the signal is lost because of bypassing through this capacitance.**

frequency components are bypassed to ground. Good high-frequency response can be obtained by proper selection of the tubes (for low capacitance) and by careful layout and wiring to reduce stray effects.

11 AMPLITUDE DISTORTION . . . Any variation of gain with amplitude of the input signal is known as *amplitude distortion.* A given amplifier, for example, may have a gain of 50 for input signals up to 2.0 volts amplitude, but the gain may drop to 40 for a signal level of 2.5 volts and to 30 for a 3.0-volt signal.

Amplitude distortion is caused by operating a tube in the nonlinear portion of its characteristic curves. Normally, the tube and associated circuitry are so selected that the tube will operate in the linear portion of its dynamic characteristic. However, distortion is caused if for some reason the characteristics of the tube or circuitry are changed.

Causes of amplitude distortion include defective tubes, improper grid bias, excessive grid signal, improper operating voltages, wrong load impedance, and defective coupling capacitor.

Amplitude distortion is also called *harmonic distortion.* This is because, whenever amplitude distortion occurs, additional frequencies appear in the output of the amplifier that were not in the input signal. These new, spurious frequencies are harmonics of the input frequencies. For example, if a 200-cps sinusoidal signal is applied to the input of an amplifier with amplitude distortion, the output will have sinusoidal waves of 400 cps, 600 cps, and even higher harmonics, as well as the fundamental of 200 cps.

To see why the harmonics are formed, see Fig. 12. If the gain of the

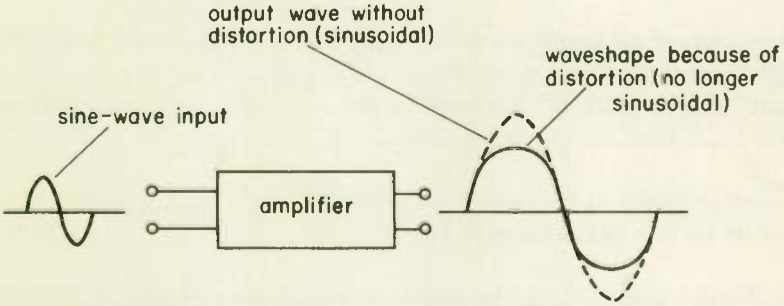

Fig. 12 Output wave from amplifier with amplitude distortion is not sinusoidal when input wave is sinusoidal.

amplifier is not as great for signal peaks as for parts of the cycle when signal amplitude is low, the output peaks will be flattened as shown, so that the output wave is not sinusoidal. You have learned that any nonsinusoidal wave is equivalent to a fundamental sinusoidal wave plus sinusoidal harmonics of this fundamental. Hence, amplitude distortion results in the generation of spurious harmonics.

WHAT HAVE YOU LEARNED?

1. If the gain of an amplifier varies with the frequency of the incoming signal, this effect is known as ____________ ____________.

2. The gain of an amplifier tends to (a) __________ at low frequencies and to (b) __________ at high frequencies.

3. The distortion of an *RC*-coupled amplifier at low frequencies is caused by ______________________________________.

4. The low-frequency response (gain), can be improved by using a *(larger) (smaller)* coupling capacitor.

5. Three sources of undesirable shunt capacitances are __________ ____________, ______________________, and __________ ____________.

6. Shunt capacitance will (a) *(reduce) (increase)* the (b) *(low) (high)*-frequency response.

7. If the gain of an amplifier varies with the amplitude of the incoming signal, this effect is known as (a) ____________ ____________. It is primarily caused by operation in the (b) ______________ portion of the (c) ____________ ____________.

8. Excessive bias can be caused by (a) too large a ______________ resistor or by (b) a plate resistor too __________.

9. Insufficient grid bias can be due to (a) a cathode resistor too *(small) (large)*, (b) a plate-load resistor too *(small) (large)*, or (c) ____________ bypass capacitor.

1. Frequency distortion 2. (a) Decrease; (b) decrease
3. Increased reactance of the coupling capacitor 4. Larger
5. (a) Output capacitance of the tube; (b) input capacitance of next tube; (c) stray capacitance of components and wiring.
6. (a) Reduce; (b) high
7. (a) Amplitude distortion, (b) non-linear, (c) characteristic curves
8. (a) Cathode (b) Small . . . This would cause an increase in plate current and therefore a greater voltage drop across the cathode resistor.
9. (a) Small (b) large (c) defective . . . A defective bypass capacitor across the bias resistor could reduce the effective cathode resistor value.

12 GAIN OF AN *RC*-COUPLED AMPLIFIER . . . The purpose of R_3 in Fig. 13 is to block the signal component i_p of the plate current and so force this component to the grid of the next stage. If R_3 were able to completely block the signal, the gain realized from the stage would be equal to the amplification factor μ of the tube. Unfortunately, the highest practical resistance value that can be used for R_3 is so low that much of the signal passes through R_3 and is therefore lost. As a result, the actual voltage gain A which it is possible to obtain from a stage is much less than the amplification factor of the tube. Some of the signal is also lost through R_4, further reducing the stage gain. However, since R_4 usually has a resistance much higher than R_3, most of the signal loss is through R_3.

The voltage gain A of a stage is the ratio of the signal output voltage to the signal input voltage, which would be e_o/e_i in Fig. 13. The higher R_3 and R_4, the better the gain of the stage, because less of the signal is lost. The lower the internal resistance of the tube, called the *plate*

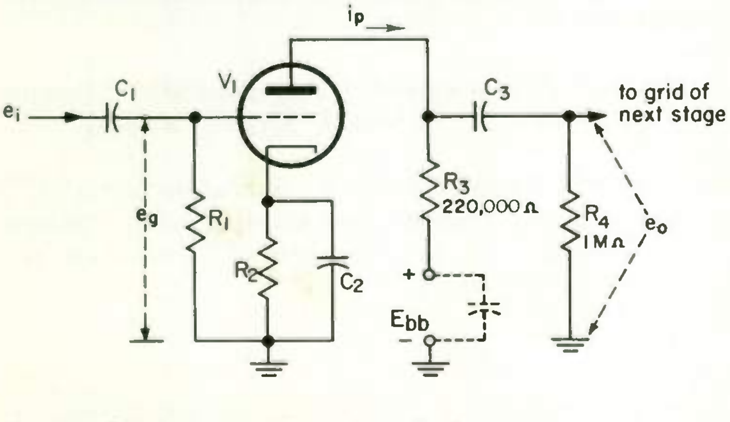

Fig. 13 RC-coupled amplifier; schematic diagram.

resistance, the higher the gain will be, because the signal is weakened in passing through the opposition offered by the plate resistance.

Do not confuse the amplification factor μ of a tube with the gain A of the stage in which the tube is used. The amplification factor represents the maximum gain theoretically obtainable from a stage under ideal conditions. The actual gain A that can be obtained in a practical circuit is always much less. The approximate gain of an RC-coupled stage can be found by the formula

$$A = \frac{\mu R_3}{r_p + R_3}$$

where r_p is the plate resistance of the tube.

For a stage using a pentode tube, the approximate voltage gain can be found by the simpler formula

$$A = g_m R_3$$

where g_m is the transconductance of the tube. Since the gain of a pentode is proportional to g_m, a tube with a high value of transconductance should be selected for the best gain when using a pentode. For best gain with a triode, the amplification factor μ should be high.

WHAT HAVE YOU LEARNED?

1. The gain of an amplifier is *(more) (less)* than the amplification factor μ of the tube used.

2. If high gain is desired from a triode stage, should the following tube and circuit values be high or low: (a) μ, (b) r_p, (c) R_3, (d) e_g?

3. The triode section of a 12AT6 has an amplification factor of 70 and a plate resistance of 58,000 ohms at its operating point. It is used as an RC-coupled amplifier with a plate resistor of 0.1 megohm. The approximate gain of the amplifier is ________.

ANSWERS

1. Less
2. (a) High; (b) low; (c) high

(d) Although the value of e_g affects the value of the output, it does not affect stage gain.

3. 44.3 . . . $A = \frac{\mu R_3}{R_3 + r_p} = \frac{70 \times 100{,}000}{58{,}000 + 100{,}000} = 44.3$

POWER AMPLIFIERS

The end purpose of any audio system is to supply power to a load. Once the voltage amplifiers have built up the signal voltage, it is necessary to develop power to drive the loudspeaker(s) or other load. This is the function of the power amplifier.

Power amplifiers are very similar in operation to voltage amplifiers, but they must be equipped with physically larger components which are capable of handling larger currents.

For voltage amplifiers, where only low power output is required, class A operation with its attendant low operating efficiency is generally satisfactory.

For power amplifiers, however, circuits are frequently operated as class B to obtain the greater outputs needed. This results in grid current flow, which causes a power loss at the input. Obviously, the preceding stage must be able to supply the required small input power.

When the power stage is to be driven into the positive grid region, the preceding stage, called the *driver*, must be carefully designed. The driver stage must be capable of delivering the required input power with good regulation, to avoid amplitude distortion. Furthermore, the input impedance should be low, to minimize input power loss.

13 IMPEDANCE MATCHING . . . For the greatest power transfer from a power source to a load, the impedance of the load must be equal to the impedance of the power source. The two impedances are then said to be matched. When the load has an impedance greatly different from the source impedance, a match between the two can be obtained by the use of a transformer. For example, in the circuit shown in Fig. 14 it is desired to use the output signal from the tube to drive the

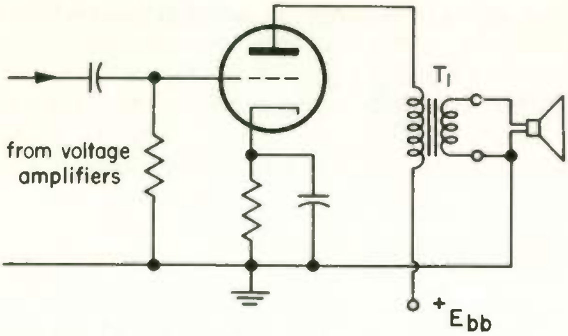

Fig. 14 A triode power amplifier with loudspeaker load.

loudspeaker. Now the impedance of the triode tube (which is the power source) is perhaps 4000 ohms, while the impedance of the speaker is only 10 ohms. In spite of the wide difference in values, the proper transformer T_1 will match the two impedances, so that maximum power is delivered from tube to loudspeaker. The transformer "steps up" or "steps down" impedance in much the same manner as it steps up or steps down voltages.

A proper impedance match requires that the transformer windings have the correct turns ratio. The proper turns ratio is equal to the square root of the ratio of the impedances to be matched. If 4000 ohms is to be matched to 10 ohms, the impedance ratio is equal to $4000 \div 10 = 400$, and $\sqrt{400} = 20$, the proper transformer turns ratio.

Thus if the winding with the greatest number of turns has 600 of them, the other winding should have $600 \div 20 = 30$ turns. The winding with the fewest turns connects to the lowest of the two impedances to be matched.

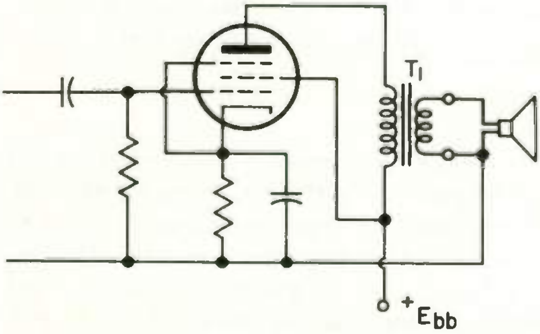

Fig. 15 A pentode power amplifier with loudspeaker load.

A schematic diagram of a triode power amplifier connected to a loudspeaker load through a suitable output transformer is shown in Fig. 14. Pentodes and beam power tubes are also commonly used, because they require much lower input signals for the same power output. The schematic diagram for such a circuit is shown in Fig. 15. Plate and screen are often operated at the same potential in power pentodes, as is done in Fig. 15.

WHAT HAVE YOU LEARNED?

1. The loudspeaker in an audio system is driven by a ____________ amplifier.

2. In order to get maximum power to the speaker in Fig. 14, the tube plate (a) ____________ must be (b) ____________ to the loudspeaker impedance. This is accomplished by use of an output (c) ____________.

3. In Fig. 16, a 16-ohm speaker is connected to the low-impedance side of an output transformer with a 20 to 1 turns ratio. For a proper match the plate resistance of the tube should be ____________ ohms.

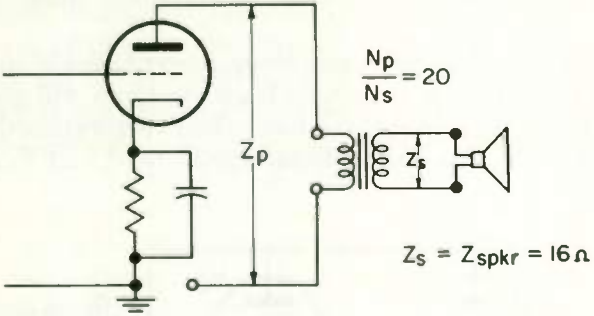

Fig. 16

4. A manufacturer recommends an 8000-ohm load for optimum results with a specific tube. If a 4-ohm speaker is to be used, the turns ratio of the output transformer should be ____________.

5. If it is desired to get maximum power output from a minimum number of stages, (a) ____________ or (b) ____________ power tubes should be used.

6. Draw the circuit diagram for a pentode power amplifier coupled to a loudspeaker load.

ANSWERS

1. Power 2. (a) Resistance; (b) matched; (c) transformer
3. 6400 . . . The ratio of impedances equals the square of the turns ratio:

$$20^2 = 400 \qquad 400 \times 16 = 6400 \text{ ohms}$$

4. 1 to 44.7 . . . Thus ratio $= \sqrt{\frac{4}{8000}} = \sqrt{\frac{1}{2000}} = \frac{\sqrt{1}}{\sqrt{2000}} = \frac{1}{44.7} = 1{:}44.7$
5. (a) Pentode; (b) beam . . . These tubes have a higher *power sensitivity;* that is, they require a lower input signal voltage for a given power output. Therefore, fewer voltage amplifier stages will be needed.
6. See Fig. 15.

14 PUSH-PULL OPERATION . . . When the maximum output from a given tube in a power amplifier is not sufficient, a tube with a higher power rating can be used.

On the other hand, two smaller, identical tubes can be used. Connecting the two tubes in *parallel* (plates tied together, grids tied together, etc.), as shown in Fig. 17, will produce twice the output power that is obtainable from one tube.

Connecting the two tubes in *push-pull,* however, more than doubles the usable output and also provides several other advantages.

A typical push-pull circuit using beam power tubes is shown in Fig. 18. Examine each tube circuit by itself, and you will discover that this push-pull circuit is nothing more than two standard power amplifier circuits "back to back." Input signals to V_1 and V_2 are equal in

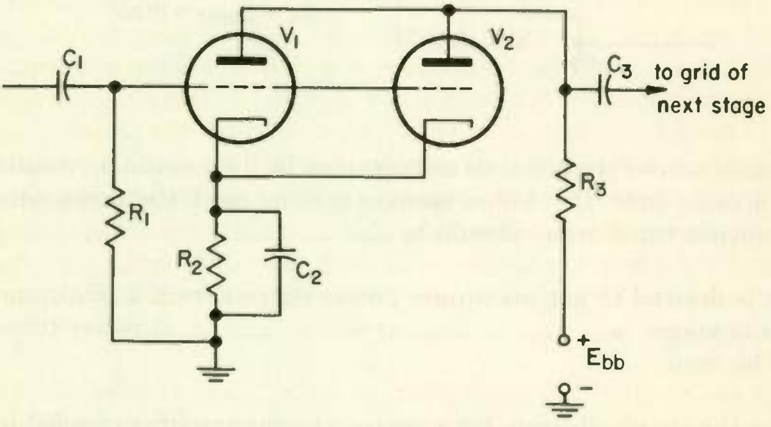

Fig. 17 Parallel power amplifier (RC coupling).

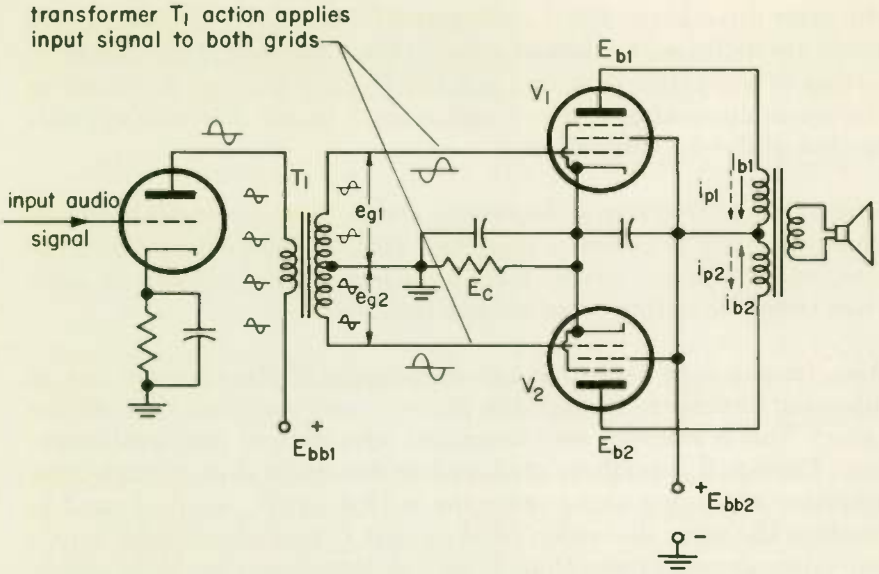

transformer T_1 action applies input signal to both grids

Fig. 18 A push-pull power amplifier using beam power tubes.

magnitude but opposite in phase. When the upper terminal of the transformer is at a positive maximum, the lower end is at a negative maximum.

The voltage measured between the grids must be twice that required for one tube. If the grids use power, twice the input power for a one-tube amplifier stage is required.

One advantage of push-pull operation can be seen if you examine the no-signal condition. The plate current I_{b_1} for V_1 flows from cathode to plate and *down* through the primary winding of the output transformer, as indicated by the solid arrow in Fig. 18. The plate current I_{b_2} for V_2 flows from cathode to plate and *up* through the transformer winding. Since these equal d-c components flow in *opposite* directions through the primary, the total magnetization of the transformer core by direct current is zero. Therefore, there is no danger of saturating the transformer because of the d-c current, and the transformer core can be made smaller in cross section, thus reducing weight, bulk, and cost.

Now let us examine the circuit when an a-c signal is applied. As the grid signal applied to V_1 swings positive, the plate current for V_1 increases. Therefore the a-c component of plate current must flow in the same direction as the d-c component. (In Fig. 18, the a-c components are indicated by dashed arrows.) Simultaneously, the grid of V_2 swings in a negative direction and the V_2 plate current decreases, or the a-c component of plate current must flow in a direction opposite to that of the d-c component.

Therefore, both a-c components i_{p_1} and i_{p_2} flow through the transformer primary in the same direction. Their magnetic fluxes are additive, and the power output from a push-pull amplifier can be more than twice the output from a single tube.

Also, for any *even harmonic,* the components of plate current flow in *opposing* directions through the primary, and therefore their effects cancel. This is a second very important advantage of push-pull operation. Push-pull amplifiers produce less distortion than a single-tube amplifier while furnishing twice the output power, or—if allowed to produce the same distortion level as that from a single-tube amplifier—they develop more than twice the output power. Most amplitude distortion is the result of the generation of spurious second harmonics in the tube. These and other even harmonics cancel out in the output transformer. Third-harmonic distortion is not canceled out, but it is usually minor.

WHAT HAVE YOU LEARNED?

1. If two tubes have their similar elements tied together, they are said to operate in ______________ .

2. Two tubes in parallel can deliver ______________ the power output of a single tube.

3. (a) ______________ input signals are required for push-pull operation. These signals must be (b) __________ in magnitude and (c) ______________ in phase. Such signals can be obtained by using (d) ______________ coupling with a (e) ____________________ secondary.

4. Comparing single-tube, parallel, and push-pull operation: (a) the ______________ circuit requires the most expensive output transformer; (b) the ______________ circuit is least likely to cause saturation of the output transformer; (c) the ______________ circuit requires the largest input signal level for full power output; (d) the ______________

circuit produces the least distortion; and (e) the ____________ circuit can produce the highest power output.

ANSWERS

1. Parallel 2. Twice

3. (a) Two; (b) equal; (c) opposite; (d) transformer; (e) center-tapped

4. (a) Parallel . . . Has the highest d-c flow in the primary and needs more iron in the transformer core to prevent saturation.

(b) Push-pull . . . The d-c magnetizing effect of V_1 is canceled by the action of V_2.

(c) Push-pull . . . Two input signals equal in magnitude and opposite in phase, or twice the peak-to-peak value for one tube.

(d) Push-pull . . . Distortion due to even harmonics is canceled.

(e) Push-pull . . . Because of the lower distortion, it can be driven harder.

15 PHASE INVERTERS . . . We have seen that push-pull operation requires two input signal voltages that are equal in magnitude but opposite in phase. So far, we have met this requirement by using transformer coupling with a center-tapped secondary. When the power amplifier (class B) draws grid current, transformer coupling must be used, but otherwise we can get the desired input signals by using special electronic circuits known as *phase inverters*.

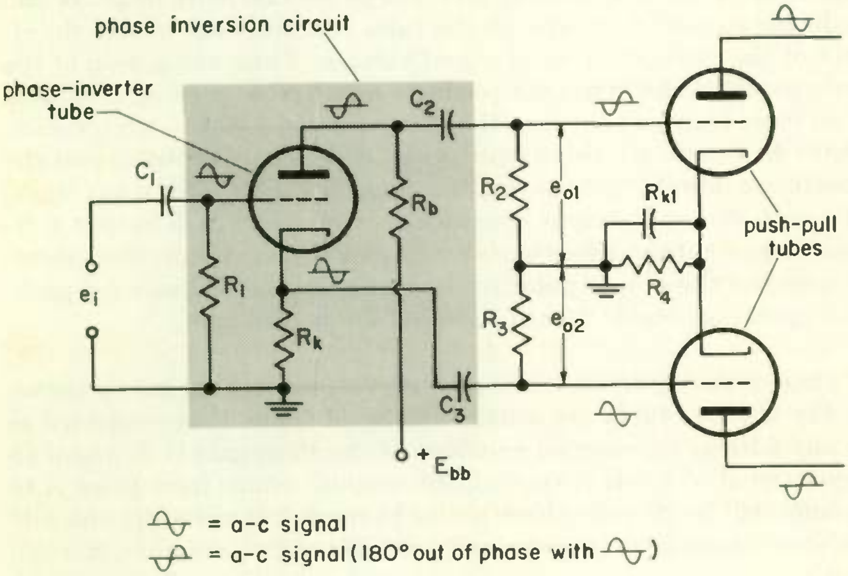

Fig. 19 Split-load phase inverter; supplies balanced input signals to push-pull amplifier.

A commonly used version is the single-tube, *split-load* phase inverter shown in Fig. 19. Notice that this circuit resembles a simple *RC*-coupled amplifier, except that the cathode bypass capacitor has been omitted and that an output voltage is tapped off the cathode resistor R_k in addition to the normal plate output.

As in any *RC* amplifier, when an input signal is applied, the plate current varies, the plate potential varies, and the output voltage e_{o_1}, coupled from the plate of the tube, is in phase opposition to the input signal e_i. In addition, the plate current flows through the unbypassed cathode resistor and causes the cathode potential to vary with changes in plate current. In other words, an alternating voltage is developed across the cathode resistor, and this voltage is in phase with the input signal.

The output voltage e_{o_2}, coupled through capacitor C_3, is therefore opposite to e_{o_1}. Since the same plate current flows through R_b and R_k, the output voltages will be equal when R_b equals R_k.

How much gain can be obtained from a split-load phase inverter? We saw above that the cathode potential varies in phase with the input signal. When the signal becomes more positive, the cathode also becomes more positive, causing grid bias to become more negative and reducing current flow through the tube. But this counteracts the effect of the increase in input signal voltage. Thus, the action of the unbypassed cathode resistor produces *negative,* or *inverse,* feedback. You have learned that negative feedback reduces the circuit gain. Since R_k equals R_b, this circuit uses 50 per cent feedback and the *maximum possible gain is just less than 2.* Thus, for an input signal of 1 volt, the *total* output approaches 2 volts, but each output voltage (e_{o_1} and e_{o_2}) can never quite reach 1 volt. This circuit, then, merely provides the proper polarity signals and proper balance for push-pull operation, and it does not provide substantial gain.

A phase-inverter circuit which does provide substantial gain is shown in Fig. 20. Two tubes are usually employed. Tube V_1 is connected as in any normal *RC*-coupled amplifier. If the stage gain is 20 and if an input signal of 1 volt is applied, the output voltage from point *A* to ground will be 20 volts. Now notice that what is normally the grid resistor for the next stage actually consists of two resistors, R_{1A} and R_{1B}.

If these resistors are accurately chosen so that $R_{1A} = 19\ R_{1B}$, the voltage from junction *B* to ground will be 1/20 of the total voltage (20

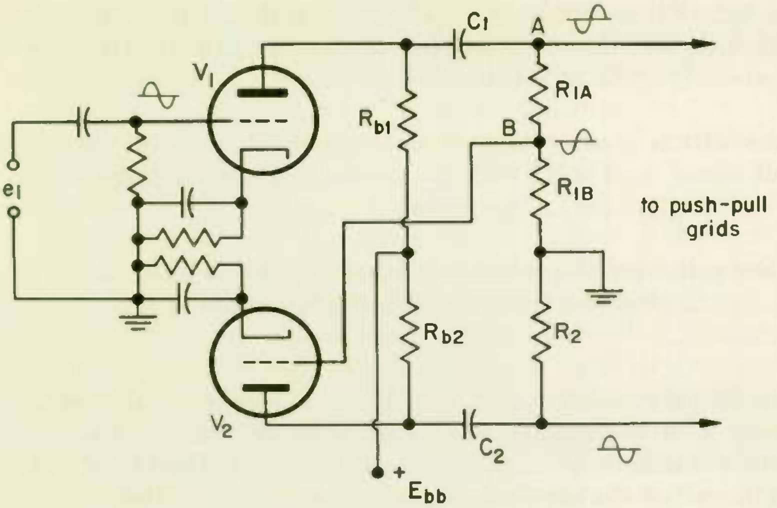

Fig. 20 Two-tube phase inverter.

volts from point A to ground) or *1 volt*—the same magnitude as the input signal but opposite in phase. When this voltage is fed to the grid of V_2, the output from V_2 will be equal and opposite to the output from V_1. Thus we have again obtained phase-inverter action, but this circuit also provides gain.

WHAT HAVE YOU LEARNED?

1. Electronic circuits used to feed a push-pull circuit from a single-ended stage are called ________ ________.

2. These circuits can be used only with class (a) ________ and (b) ________ push-pull amplifiers, because these power amplifiers do not (c) ________ ________.

3. For a given input signal, these circuits will produce (a) ________ output voltages that are (b) ________ in magnitude but (c) ________ ________ in phase.

4. In the circuit of Fig. 19, resistors (a) ________ and (b) ________ are critical in value.

5. If the tube in the circuit of Fig. 19 were to deteriorate (with age or by other cause), the effect on the balance of the output voltages *(would) (would not)* be affected.

6. A tube with a μ of 80 is used as a split-load phase inverter. If the input signal level is 0.5 volt, the probable output voltage at the plate is ____________________ volts.

7. The low gain from the split-load circuit is due to (a) ____________________ produced because the cathode resistor is (b) ____________________.

8. In Fig. 20, (a) resistors ________ and ________ are critical in value. If the stage with V_1 normally has a gain of 35, the ratio of these resistor values should be (b) ____________. If the input signal level is 0.5 volt, the output at the plate of each tube is (c) ________ volts.

9. If the characteristics of tube V_2 should change (by aging or replacement), the output voltages *(will) (will not)* remain equal.

ANSWERS

1. Phase inverters 2. (a) *A;* (b) AB_1; (c) draw grid current
3. (a) Two; (b) equal; (c) opposite 4. (a) R_k; (b) R_b
5. Would not . . . The same plate current flows through R_b and R_k. Any change affects both outputs equally. The balance is not affected.
6. Just less than 0.5 volt . . . Each output voltage approaches, but cannot exceed, the input amplitude.
7. (a) Inverse feedback; (b) not bypassed
8. (a) R_{1A}, R_{1B} (b) 34 to 1 . . . This will make the voltage from point *B* to ground 1/35 of the total output, or just equal to the input amplitude.
   (c) 17.5 volts . . . Each tube in this circuit has its full normal gain.
9. Will not . . . The tubes in this circuit should have matched characteristics; otherwise, the plate current changes through their respective plate resistors will not be equal.

INPUT DEVICES–MICROPHONES

A variety of source, such as a microphone, record player, tape recorder, or a computer, may be used to supply an input signal to an audio amplifier. The most widely used of these input devices is the *microphone,* which is used to convert sound waves to electrical waves. Among the more commonly used types are the carbon, crystal, and dynamic microphones. Each of these will be discussed briefly.

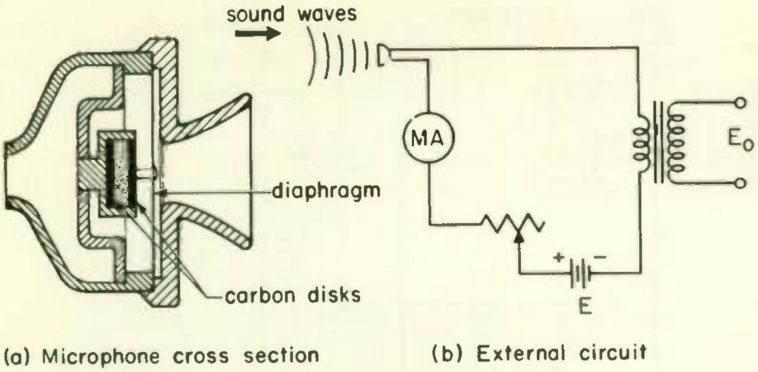

(a) Microphone cross section (b) External circuit

Fig. 21 Carbon microphone.

16 THE CARBON MICROPHONE . . . A carbon microphone is shown in Fig. 21. As a sound wave strikes the diaphragm, it causes the diaphragm to move in and out in accordance with the sound-pressure changes. This varies the pressure on the carbon granules, which changes the electrical resistance between the carbon disks. These disks, in turn, are connected to an external circuit as shown in Fig. 21(b), and the no-signal current is adjusted to the manufacturer's rated value. The change in the electrical resistance of the microphone causes the current in the transformer primary to vary, and an alternating voltage is induced in the output winding. The electrical output E_o is then a replica of the sound wave. Its magnitude is generally less than 0.1 volt.

This device is known as a *single-button microphone*. The word "button" refers to the "box" containing the carbon granules. Because of random changes in contact among granules, a continuous hiss is heard. To overcome this effect a *double-button* unit was developed. Its action is diagramed in Fig. 22. The push-pull action tends to balance out the hiss and any even-harmonic distortion. To obtain full advantage of the double-button action, it is necessary that the no-signal current for each button be balanced.

Unbalanced currents are generally due to *packing* of the carbon granules. Such packing can be detected by abnormally high current values. A common cause of packing is subjecting the microphone to loud, close-up sounds. When the granules are packed, there is little change in resistance with sound pressure, and the microphone output is very low.

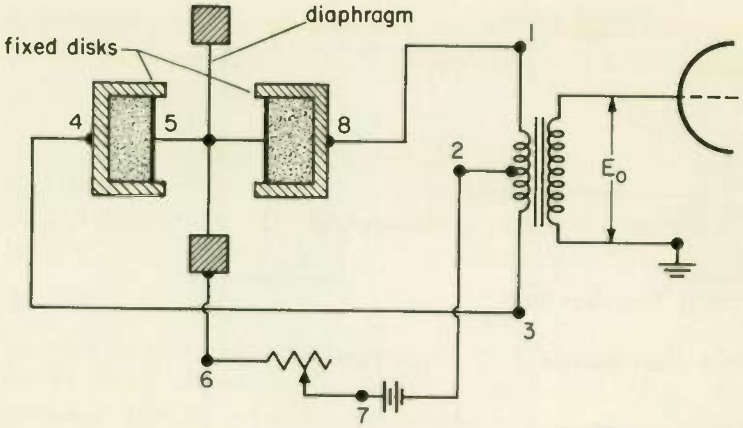

Fig. 22 Action of a double-button microphone.

The carbon microphone is essentially a low-impedance device that ranges from 50 to 200 ohms in resistance. For optimum results, carbon microphones should be transformer-coupled to the grid of a vacuum-tube amplifier, using step-up transformers. Carbon microphones have a distortion level that is fairly high compared to that of other types of microphone, and their frequency response, although adequate for voice, is very limited for music.

However, carbon microphones produce higher output levels than any other type; they are rugged; and their initial cost is low. Consequently, they are often used in portable equipment and wherever low cost or high output level is more important than fidelity considerations.

WHAT HAVE YOU LEARNED?

1. The microphone converts (a) ____________ ________________ changes into (b) ____________________ ____________.

2. The operating principle of the carbon microphone is that its electrical (a) ________________ varies with changes in (b) ________________ of the sound wave.

3. The box containing the carbon granules is called a ______________.

4. Figure 21 shows a ______________ - ______________ carbon microphone.

5. The meter and rheostat in the circuit of Fig. 21 are necessary to permit adjustment of the ________ - ____________ current to the manufacturer's specification.

6. For proper operation of a double-button microphone the (a) ______ - __________ currents should be (b) ____________. To check for this condition, milliammeters should be inserted in the circuit of Fig. 22 between points (c) _______ and _______ and points (d) _______ and _______.

7. Shouting directly into a carbon microphone can produce a defect known as (a) ___________. When this happens, the resistance of the button is (b) ___________. This is indicated by currents appreciably (c) ___________ than the manufacturer's specification. This condition results in (d) ________ output.

8. The impedance of carbon microphones ranges between (a) ______ and ______ ohms. A carbon microphone is coupled to the grid of a tube through a (b) ________ - _______ transformer.

9. A carbon microphone *(can) (cannot)* be used without a d-c supply source.

10. A carbon microphone, complete with battery and rheostat, *(can) (cannot)* be directly coupled to the grid of an amplifier tube.

ANSWERS

1. (a) Sound pressure; (b) electrical waves   2. (a) resistance; (b) pressure
3. Button   4. Single-button   5. No-signal
6. (a) No-signal; (b) balanced; (c) 3 and 4; (d) 1 and 8
7. (a) Packing; (b) reduced; (c) higher; (d) low
8. (a) 50 and 200; (b) step-up transformer
9. Cannot . . . Without the battery, no current would flow and no output voltage would be developed.
10. Cannot . . . There would be no complete d-c path and no current would flow.

17 THE CRYSTAL MICROPHONE . . . When a crystal of any of certain substances is subjected to mechanical pressure, a difference of potential is developed across opposite faces of the crystal. This is known as the *piezoelectric effect.* (The term "piezo" means pressure.)

Rochelle salts and quartz exhibit the piezoelectric effect. The former is used in microphones because it develops a higher output voltage for a given mechanical strain.

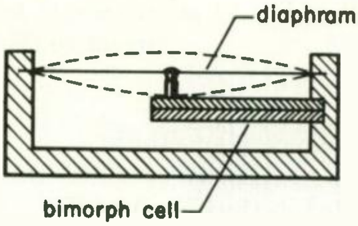

Fig. 23 **Crystal microphone construction.**

One type of construction uses two thin crystals cemented together in a differential arrangement called a *bimorph cell.* As shown in Fig. 23, the free end of the cell is attached to a diaphragm. When sound waves strike the diaphragm, the diaphragm vibrates. Its vibrations cause mechanical distortion of the cell, and this produces an output voltage.

Crystal microphones have a high impedance (on the order of 1 megohm), and they can therefore be connected directly across the grid resistor of a vacuum-tube amplifier. A simple two-stage amplifier with crystal microphone is shown in Fig. 24. Notice that no power source is needed with this microphone, because the crystal generates its own voltage. A potentiometer control R_1 is used to adjust the output volume level. A pentode is used for V_1 to provide a high voltage gain, and a beam power tube is used for V_2 because it has a high power sensitivity.

Crystal microphones are rugged and lightweight, and they have better frequency response than carbon microphones. However, their out-

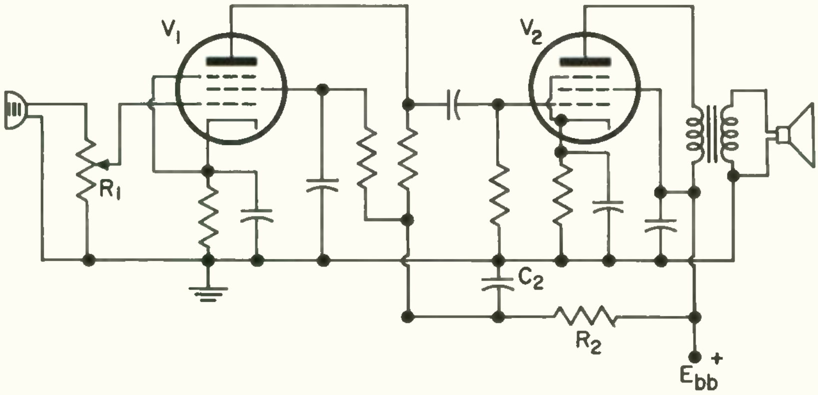

Fig. 24 **Crystal microphone with two-stage amplifier.**

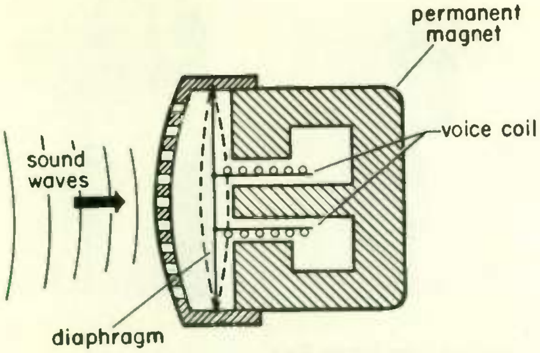

Fig. 25 **Construction of a dynamic microphone.**

put level is appreciably lower. Also, they are sensitive to heat. The piezoelectric effect of a Rochelle salt crystal drops off rapidly above 100°F, and the crystal microphone can be permanently damaged if it is exposed to temperatures above 125°F.

In 1946 it was discovered that ceramic materials could be made piezoelectric. This led to the development of the *ceramic* microphone. This unit is almost exactly like the crystal microphone in all aspects, and it has the added advantage that it is not affected adversely by high temperature.

18 THE DYNAMIC MICROPHONE . . . Figure 25 shows the basic features of the *dynamic* microphone. When a sound wave strikes the diaphragm, it moves in and out in accordance with the sound-pressure changes. As the diaphragm vibrates, it causes the coil to move back and forth within the air gap of the permanent-magnet structure, thereby generating a voltage that varies with sound-pressure changes. Because of the motion of the coil, this microphone is also known as a *moving-coil* microphone.

Since the coil has relatively few turns, the microphone has a low impedance (5 to 20 ohms). Usually an impedance-matching transformer is built into the microphone case itself. The dynamic microphone is rugged; it is not subject to temperature or moisture effects; and it can be designed to have excellent frequency response (40 to 20,000 cycles). It is, therefore, widely used both as a general-purpose unit and as a high-quality microphone. Its output level, however, is even lower than that of the crystal microphone.

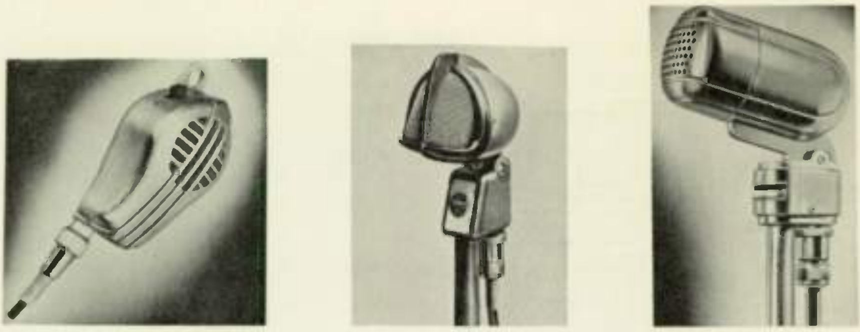

Fig. 26 Typical microphones. (Courtesy: The Turner Co.)

Three typical microphones are shown in Fig. 26. The unit at the left is a hand-type carbon mike. The center unit is available either as a crystal or dynamic type. The microphone at the extreme right is a high-quality dynamic.

19 PREAMPLIFIERS . . . The signal level from most microphones is extremely low (on the order of a few millivolts). If the microphone is connected to its amplifier through a long length of cable, it is possible for the noise picked up by the cable to exceed the signal level. To avoid this effect, it is common practice to connect the microphone to a small (one- or two-stage) *preamplifier* placed as close as possible to the microphone itself. The amplified signal is then fed through the long cable to the main amplifier. Preamplifiers are also frequently used to boost the output signal from record players, tuners, and other devices to a level sufficient to drive other amplifiers.

WHAT HAVE YOU LEARNED?

1. The operation of crystal microphones is based on a phenomenon known as the ______________ effect.

2. This effect is peculiar to (a) ____________ and is very pronounced in (b) ______________ ____________, the material used in crystal microphones.

3. The basic crystal element used in the microphone is called a (a) ____________ cell. When this element is (b) ______________, it develops a (c) ______________ across its faces.

4. Crystal microphones can be (a) ____________ coupled to the (b) __________ of an amplifier tube because they have a (c) __________ impedance. A typical impedance is approximately (d) ______________.

5. In the circuit of Fig. 24, R_1 serves as a ____________ control.

6. The ceramic microphone operates on the (a) ________________ principle, and therefore (b) ________ battery is required with this unit.

7. If an intercom system were to be used between a control center and an open-hearth steel furnace location, a *(crystal) (ceramic)* microphone would be preferable at the furnace station.

8. A microphone which generates its output voltage because of a (a) __________ cutting a magnetic field is known as (b) ____________ or (c) ____________ - __________ microphone. This microphone has a (d) __________ impedance and requires a (e) __________ - ________ transformer for coupling to the grid of a tube.

9. Comparing carbon, crystal, and dynamic microphones, list the units in order of (a) best frequency response __________, __________, __________, (b) highest output voltage __________, __________, __________, and (c) highest impedance __________, __________, __________.

10. A preamplifier is used to build up the (a) ____________ level above the possible (b) __________ level when the pickup point is (c) __________ from the equipment location.

ANSWERS

1. Piezoelectric 2. (a) Crystals; (b) Rochelle salts
3. (a) Bimorph; (b) distorted; (c) voltage
4. (a) Directly; (b) grid; (c) high; (d) 1 megohm
5. Volume 6. (a) Piezoelectric; (b) no
7. Ceramic . . . Crystals (Rochelle salt) are not usable at temperatures near 100°F and are permanently damaged at 125°F.
8. (a) Coil; (b) dynamic; (c) moving coil; (d) low; (e) step-up
9. (a) Dynamic, crystal, carbon; (b) carbon, crystal, dynamic
(c) crystal, carbon, dynamic
10. (a) Signal; (b) noise; (c) remote

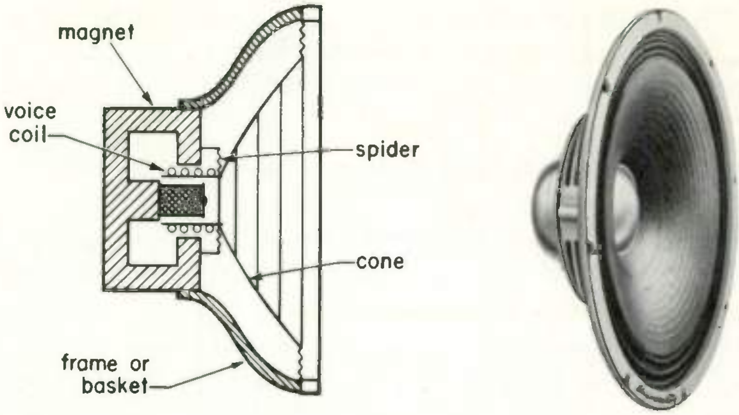

Fig. 27 The dynamic loudspeaker. (Courtesy: University Loudspeakers.)

OUTPUT DEVICES

The end purpose of any audio equipment is to reproduce sounds. Therefore, the output device must convert the amplified electrical waves back into sound waves.

20 LOUDSPEAKERS . . . The most commonly used type of loudspeaker, by far, is the *dynamic loudspeaker*. Its basic construction and external appearance are shown in Fig. 27. The signal voltage from the output of the power amplifier is fed to the *voice coil,* where it creates a flux that varies with the audio signal. This varying flux combines with the flux of the permanent magnet, setting up a force which moves the voice coil back and forth along its axis. Since the voice coil is rigidly attached to the cone, the cone also moves back and forth, and the resulting air-pressure vibrations produce the sound waves.

To permit easy movement, the outer rim of the cone is attached to the frame by means of a flexible suspension. Behind the cone, a *spider* is used to keep the voice coil centered within the air-gap space. Since the voice coil has only a few turns, speaker impedances are generally low, and matching transformers must be used as explained in Topic 13. Transformers are used not only to match impedances but also to keep the d-c component of plate current out of the voice coil winding. To simplify transformer requirements, manufacturers have standardized voice coil impedances at 3.2, 6, 8, and 16 ohms.

Sometimes it is necessary to transfer audio power to a high-impedance load such as a permanent-magnet loudspeaker (similar to the

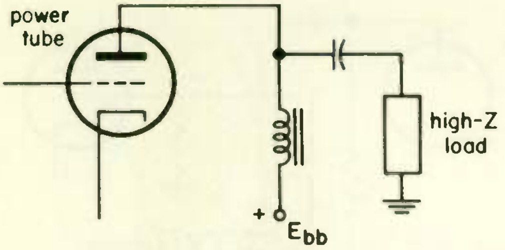

Fig. 28 **Impedance coupling to a high-impedance load.**

headphone described in the next topic) or the modulation stage of a transmitter. Again it is necessary to keep the d-c out of the load. However, since the load is high-impedance, matching may not be necessary. Instead of a transformer, a more economical coupling is impedance coupling as shown in Fig 28. Resistance coupling should not be used, because too much power would be wasted in the plate resistor.

The speaker and secondary of T_1 are both shown grounded in Fig. 14. This is often done when the speaker is mounted some distance away from the power transformer. In this way, both the speaker and transformer are grounded to the chassis at any convenient point, and only one lead is run from the transformer to the speaker.

21 HEADPHONES... In communications work, and for private listening, headphones are commonly used. These units use a moving coil, a crystal element, or a magnetic diaphragm for converting electrical waves into sound. The most common type of headphone is the magnetic diaphragm type shown in Fig. 29(a). The soft-iron diaphragm is normally under some tension because of the attraction exerted by the permanent magnet. When an audio signal is fed to the coils, the resulting alternating flux increases and decreases this attraction, causing the diaphragm to vibrate and produce sound waves. Headphones consume relatively small amounts of power, and they therefore do not require power amplifiers. When used with complete amplifier circuits, it is common practice to feed the headphones from a voltage amplifier stage. This is shown in Fig. 29(b). The phones are connected to a plug. When the plug is inserted into the phone jack, the phones are connected across the output of V_1 through the coupling capacitor C_c. Simultaneously the audio feed to the grid of V_2 is broken, and no sound will be heard from the loudspeaker connected to the output of V_2.

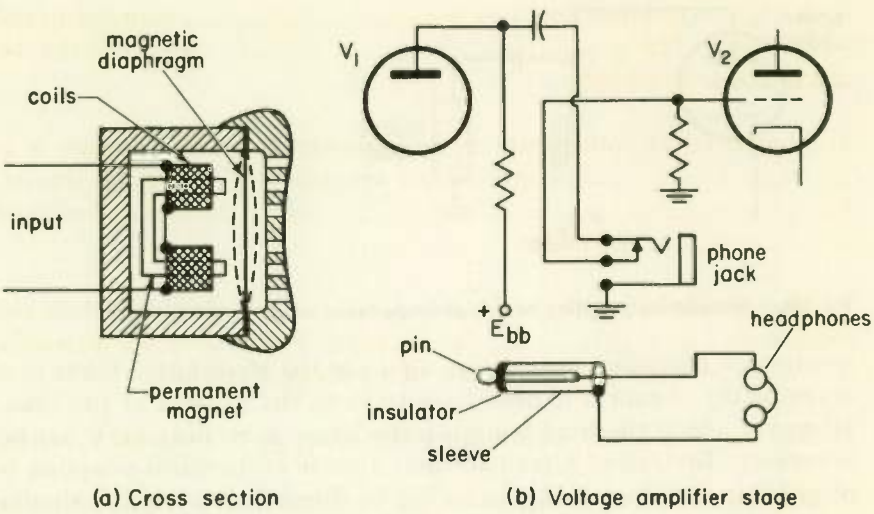

(a) Cross section (b) Voltage amplifier stage

Fig. 29 **Magnetic headphone; construction and connection.**

The technique shown in Fig. 29(b) can be used with high-impedance headphones, and the majority of headphones in use today are of this type. Typical values for magnetic headphones generally range between 2000 and 5000 ohms. Values of crystal types may run as high as 100,000 ohms. However, low-impedance phones are also available. These may be of the magnetic or moving-coil type. Such headphones require impedance-matching transformers. Otherwise, their low impedance will tend to short-circuit the output of the preceding stage.

WHAT HAVE YOU LEARNED?

1. Two devices for converting electrical waves into sound waves are (a) ______________ and (b) ______________ .

2. A commonly used type of loudspeaker is the (a) ______________ speaker. Its basic principle is the same as for the (b) ______________ microphone, but now the action is (c) ______________ .

3. With reference to Fig. 27, the audio signal is fed to the (a) ______________ . Sound is produced by the vibrations of the (b) ______________ . The (c) ______________ keeps the moving mechanism from rubbing against the magnet structure.

4. Dynamic speakers generally have a (a) ______________ impedance. Typical values range from (b) ______________ to (c) ______________ . For proper operation, they are coupled to the power amplifier through an (d) ______________ ______________ transformer.

5. A high-impedance load can be (a) ____________ coupled to the power stage. The (b) ____________ ____________ will keep the d-c out of the load winding.

6. Compared to loudspeakers, headphones generally require a (a) ____________ power level. They are generally energized from a b) ____________ ____________ stage instead of from the c) ____________ amplifier.

7. Most headphones are high- (a) ____________ devices and do not require (b) ____________ for coupling. These units are generally c) ______-coupled to the output of a voltage amplifier.

8. Redraw Fig. 29(b), eliminating the plug, jack, and the V_2 stage.

9. If low-impedance headphones are connected as in Fig. 29(b), the output from V_1 will be very (a) *(high) (low)*. For proper operation, such headphones must be coupled through an (b) ________-________ ________.

ANSWERS

. (a) Loudspeakers; (b) headphones 2. (a) Dynamic; (b) dynamic; (c) reversed
3. (a) Voice coil; (b) cone; (c) spider
4. (a) Low; (b) 3.2 ohms; (c) 16 ohms; (d) impedance matching
5. (a) Impedance; (b) coupling capacitor
6. (a) Lower; (b) voltage amplifier; (c) power
7. (a) Impedance; (b) transformers; (c) *RC*
8.

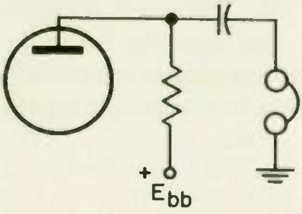

9. (a) Low; (b) impedance-matching transformer

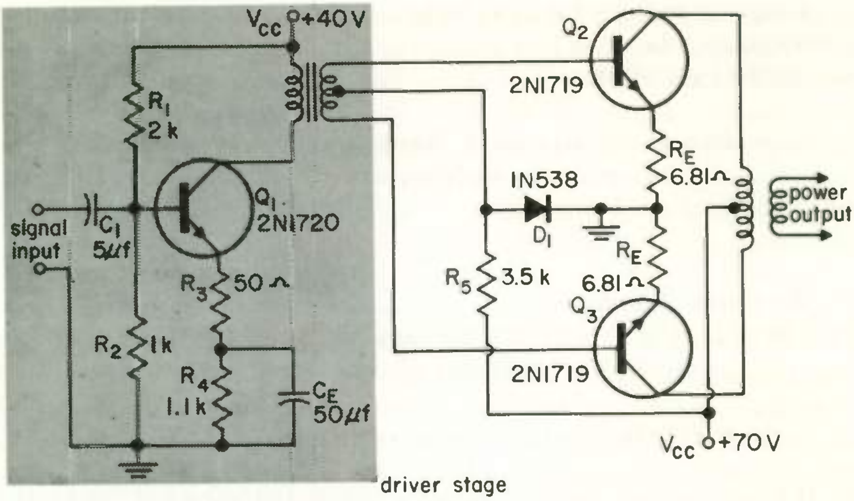

Fig. 30 **Class B push-pull power amplifier with driver stage.**

22 PUSH-PULL TRANSISTOR AMPLIFIERS . . . As with tube power amplifiers, it is advantageous to operate transistor power amplifiers in push-pull. The circuit of Fig. 30 operates class B with a power output of 4 watts. Since class B operation requires input signal power, which is drawn from the previous stage, a driver stage (which is a class A stage with adequate power output) must precede the push-pull stage. The driver stage shown is capable of a power output of 400 mw, which is far more than is really needed to drive the push-pull stage used here.

Notice that not all of the emitter stabilizing resistance (R_3 and R_4) in the driver stage is bypassed. The emitter a-c signal must pass through a small amount, R_3. This gives degenerative feedback that improves the stability of the amplifier and increases the input and output impedances for more efficient matching. The driver stage is usually transformer coupled to the push-pull stage, as shown.

A transistor is operated class B if the collector current is close to zero when there is no input signal. Since this condition is obtained when the base bias current is zero, in theory class B operation can be simply obtained by omitting the base bias circuit. In practice, things are more complicated because of the need to compensate for temperature sensitivity and because there is excessive distortion unless a small base bias current is used. In Fig. 30 the total current used for biasing is fixed by R_5 at 70/3500 = 20 ma. However, most of this current goes through the temperature compensating diode D_1 which will have a resistance of less than 6 ohms. The actual resistance of D_1 changes with temperature, and this varies the division of the R_5 current between bases and diode in such a manner as to compensate for changes in transistor characteristics due to temperature changes. Emitter resistors R_E are not bypassed. They help stabilize the transistor against temperature effects and help establish correct d-c transistor values for minimum distortion.

23

GETTING THE HIGHEST OUTPUT FROM AMPLIFIERS...

You learned in Topic 13 that the greatest power output is obtained when the impedance of the load is matched to the plate impedance of the tube. This is the greatest power output without consideration to the amount of distortion introduced. Often a more practical consideration is how to get the most power output without the distortion exceeding a certain amount. For this purpose, the load impedance should be made equal to *twice* the tube impedance. Using the example of Topic 13, where the plate impedance is 4000 ohms, we want the load impedance to be 8000 ohms in order to get the highest output to the speaker without the distortion exceeding an acceptable amount. That is, the transformer turns ratio should be such that with the 10 ohm speaker connected to the secondary of T_1, the impedance of the primary winding is 8000 ohms. The transformer impedance ratio is $8000/10 = 800$, and the proper turns ratio is $\sqrt{1} : \sqrt{800} = 1{:}28.3$.

The above discussion refers to a triode power tube. The plate resistance of a pentode power tube is so high (perhaps 50,000 ohms) that it is not practical to use a high enough load impedance to obtain a match as described above. The load impedance used with a pentode power tube is typically between 3000 and 10,000 ohms. Power tubes usually use a reactive load, such as the primary of a transformer as shown in Fig. 15, and high impedance values are difficult to obtain with this type of load.

The above discussion refers to power amplifiers; stages from which we want a high power output, such as for operating a speaker. The requirements are different in the case of voltage amplifiers, where we want to get the highest possible voltage amplification from the stage, and are not much interested in the amount of power gain. For example, in Fig. 3, we want to get the highest value of signal voltage we can to the grid of V_2. Since the only input power taken by V_2 is that dissipated in grid resistor R_2, we have no need for a high power gain from stage V_1.

The gain of a voltage amplifier is discussed in Topic 12, and for a triode tube is given by

$$A = \frac{\mu R_L}{r_p + R_L}$$

where R_L (called the load impedance) is the total impedance seen by the plate in looking toward the power supply. R_L is approximately equal to the reactance of L in Fig. 3, and is approximately equal to the resistance of R_3 in Fig. 13. The formula shows that the higher R_L is, the better the voltage gain from a triode. From a practical point of view, the best voltage gain is obtained when R_L is approximately three times the plate resistance r_p. Then the gain of the stage is equal to 75 per cent of the amplification factor μ of the tube. Larger values of R_L than this do not further increase the voltage gain enough to justify their use. If an inductor were used for the load impedance as in Fig. 3, a larger size than essential for good gain would be expensive, heavy, and bulky. If a resistor is used, such as R_3 in Fig. 13, a larger size than necessary will have an excessive voltage drop, requiring a higher voltage power supply E_{bb} in order to get adequate voltage to the plate.

Since the plate impedance of a pentode tube is very high, it is not practical to make R_L equal to three times the plate resistance. However, for maximum gain R_L must be made as high as is practical, since formula for the voltage gain of a pentode, given in Topic 12, shows that the voltage gain will be proportional to load impedance R_L.

LESSON 2601-4

AUDIO AMPLIFIERS AND EQUIPMENT

EXAMINATION

Circle the number of the correct answer for each question that follows. When you are finished, transfer the answers to the answer sheet by putting X's in the proper squares. When the graded answer sheet is returned to you, correct in this book any questions you may have missed. By doing so, you will have a record of the correct answers to all questions for review purposes.

1. When an electrical wave is converted to sound, the pitch of the sound is determined by:
   (1) The peak value of the signal voltage
   (2) The rms value of the signal
   (3) The frequency of the signal
   (4) None of the above

2. The voltage gain of a triode audio amplifier stage depends on:
   (1) μ of the tube
   (2) r_p of the tube
   (3) Load resistance R_L of the circuit
   (4) All of the above (1, 2, 3)

3. In an *RC*-coupled amplifier, increasing capacitance of the coupling capacitor:
   (1) Improves the response to bass notes
   (2) Improves the response to treble notes
   (3) Improves the response equally well for all frequencies
   (4) Causes distortion because the next grid is overdriven

4. If the coupling capacitor in an *RC*-coupled amplifier is short-circuited:
   (1) The low-frequency response will improve
   (2) The next stage will be cut-off.
   (3) The overall volume will increase
   (4) The next grid will be driven positively, and the tube may burn out.

5. Which of the following is NOT a cause for distortion in an audio amplifier:
   (1) Input signal too high
   (2) Input signal too low
   (3) Grid bias too low
   (4) Grid bias too high
   (5) Operating in the nonlinear portion of the dynamic characteristic

6. Figure 31 shows two transformer-coupled audio amplifier stages This diagram needs correction as follows:
   (1) None; the circuit is correct as shown
   (2) Remove capacitor between points *B* and *C* and join *B* to *C*
   (3) Remove resistor between *C* and *F*
   (4) Combination of steps (2) and (3)

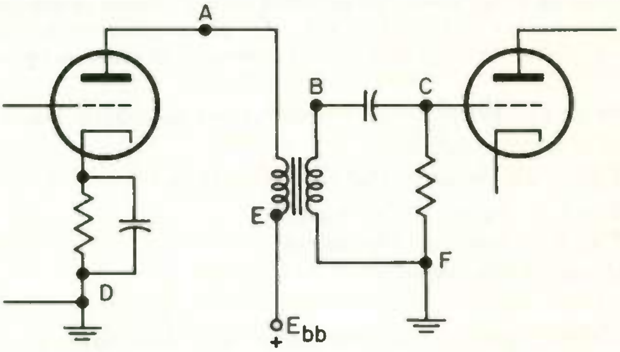

Fig. 31

7. Figure 32 shows a method of impedance coupling between two audio amplifier stages. This circuit needs correction as follows:
   (1) None; the circuit is correct as shown
   (2) Remove capacitor between points *A* and *B* and join *A* to *B*
   (3) Remove capacitor but do NOT join *A* to *B*
   (4) Replace resistor between *B* and *E* by a second inductor

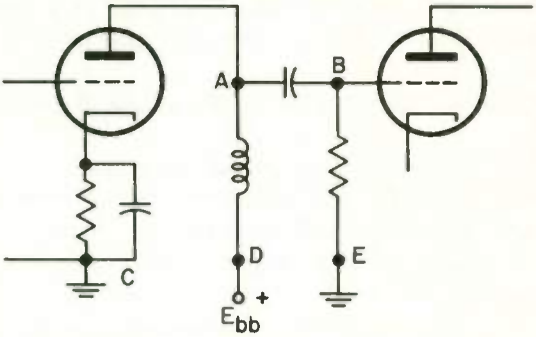

Fig. 32

8. For amplifying very low frequencies, the following coupling method is best:

(1) Loftin-White	(3) *RC*
(2) Impedance	(4) Transformer

9. "Motorboating" may occur in an audio amplifier if:
   (1) The coupling transformers resonate with the circuit capacitance
   (2) The plate choke becomes self-resonant
   (3) A common power supply is used for three or more stages
   (4) RC-coupling is used in all stages

10. Which of the following is NOT a cause of hum in an amplifier?
    (1) Plate voltage too high or too low
    (2) Coupling between heater and cathode
    (3) Leaky or open filter capacitor
    (4) Shorted power supply filter choke
    (5) Stray field pickup from an unshielded power transformer

11. Figure 33 shows a two-stage audio amplifier using NPN transistors. This circuit needs correction as follows:
    (1) Bypass capacitors are needed across R_6 and R_8
    (2) Coupling capacitor C is not connected properly
    (3) Resistors R_1 and R_4 should be omitted
    (4) The polarity of V_{cc} is reversed

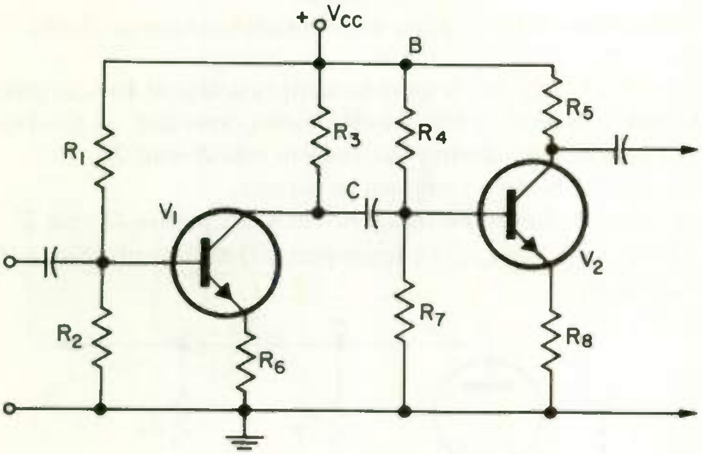

Fig. 33

12. Figure 34 shows a triode power amplifier stage inductively coupled to a loudspeaker load. This circuit needs correction as follows:
    (1) Remove capacitor C_3
    (2) A capacitor should be connected between points A and E
    (3) Run a wire connecting points B, C, D, and F, and remove all grounds but one.
    (4) A transformer should be used in place of R_1C_1

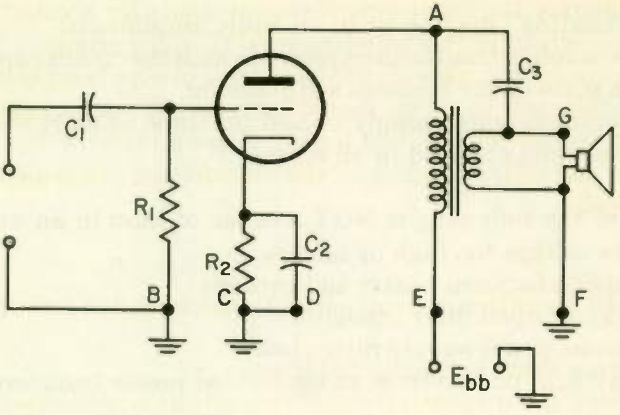

Fig. 34

13. In a multistage audio amplifier, interaction between stages is prevented by using:
   (1) Decoupling filters in the plate supply to each tube
   (2) Different coupling methods for each stage
   (3) Shielding the individual stages
   (4) Using only *RC*-coupling to eliminate magnetic fields

14. The circuit in Fig. 35 is used to supply a signal to the grids of a push-pull amplifier. This circuit needs correction as follows:
   (1) A capacitor is missing between points *A* and *B*
   (2) R_4 should be two resistors in series
   (3) A resistor should be inserted between points *D* and *E*
   (4) Disconnect E_{bb} and R_3 from point *D* and apply E_{bb} + to this end of R_3

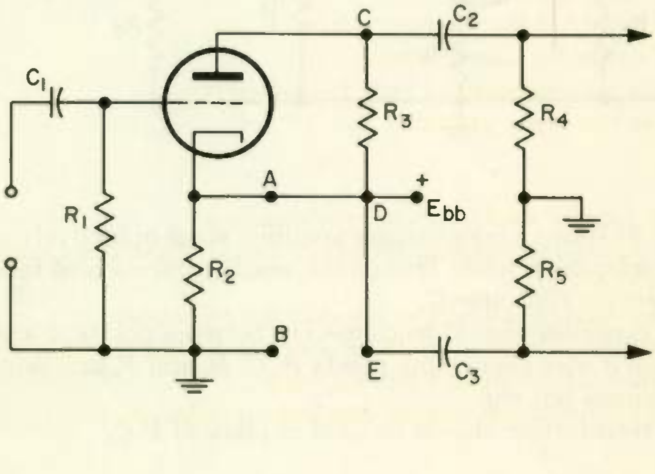

Fig. 35

15. In considering the input circuit requirements for a class B_2 audio amplifier, which of the following is NOT appropriate:
   (1) The preceding stage should be capable of supplying some power
   (2) Transformer coupling should be used between stages
   (3) The transformer should have a step-up ratio
   (4) The secondary winding of the transformer is normally center tapped.

16. Push-pull operation, as compared to single-ended circuitry does NOT:
   (1) Reduce third harmonic distortion
   (2) Reduce d-c magnetization of the output transformer
   (3) Allow for operation at higher efficiency
   (4) Deliver more than twice the power output for the same distortion level

17. As compared to two tubes connected in parallel, two tubes connected in push-pull DO NOT:
   (1) Provide higher power output for a given percentage of distortion
   (2) Provide lower distortion for a given power output
   (3) Produce a given power output with a lower input signal level
   (4) Require a less expensive output transformer

18. Packing of the granules in a carbon microphone is an indication that the unit:
   (1) Is extra sensitive
   (2) Is intended for high-impedance input
   (3) Is ready for safe shipment
   (4) Has been exposed to very loud sounds
   (5) Has too many granules

19. Before using a double-button microphone:
   (1) It should be rapped sharply to ensure that the granules are free to vibrate
   (2) The buttons should be checked for tightness
   (3) The diaphragms should be checked for equal tension
   (4) The buttons should be repacked
   (5) The currents should be checked for balance

20. In the use or storage of crystal microphones, these units should NOT BE:
    (1) Exposed to high temperatures
    (2) Exposed to loud shouts (close up)
    (3) Exposed to lights
    (4) All of the above

21. The circuit of Figure 36:
    (1) Requires transformer coupling between microphone and V_1 for best results, and add a voltage source for operating the mike.
    (2) V_1 or V_2, or both, should be pentodes
    (3) Transformer coupling should be used at the output of V_2
    (4) One of the resistors is improperly connected

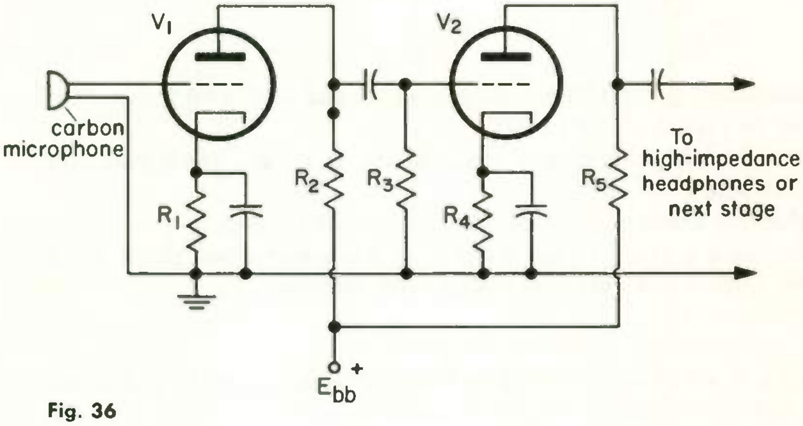

Fig. 36

22. In discussing the use of "preamplifiers," which of the following is NOT appropriate:
    (1) To make up for insufficient gain after the main amplifier
    (2) When there is a long run between microphone and amplifier
    (3) To improve the signal-to-noise ratio on the mike line
    (4) Because the microphone output level is low

23. Which of the following methods of coupling between two stages requires the highest d-c supply voltage?
    (1) Impedance coupling
    (2) *RC* coupling
    (3) Transformer coupling
    (4) All methods require the same supply voltage

24. It is desired to connect low-impedance headphones to the output of a vacuum-tube amplifier. Optimum operation is obtained by using:
    (1) *RC*-coupling
    (2) Impedance coupling
    (3) Direct coupling
    (4) Transformer coupling

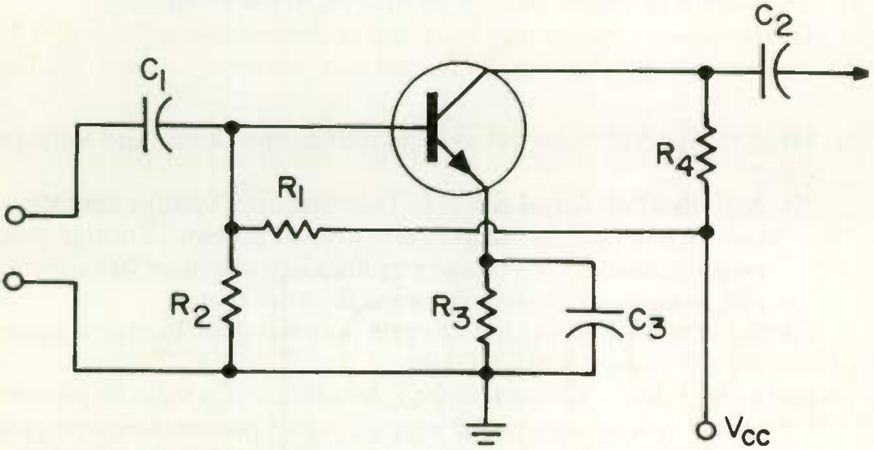

Fig. 37

25. What type of transistor is used in Fig. 37, and what is the correct polarity for V_{cc}?
    (1) Type is PNP. V_{cc} should be positive
    (2) Type is PNP. V_{cc} should be negative
    (3) Type is NPN. V_{cc} should be positive
    (4) Type is NPN. V_{cc} should be negative

26. What effect will an increase in value of R_4 have on the voltage gain of the stage of Fig. 37? Assume that the change will not affect the gain of the transistor itself.
    (1) The voltage gain of the stage will increase.
    (2) The gain will decrease.
    (3) The gain will not change.
    (4) The gain may either increase or decrease, or possibly stay the same.

27. If R_2 is removed from Fig. 37 and R_1 changed in value so that the base bias current is proper, what will be the effect on the operation of the circuit?

(1) The stage will operate erratically because there is no d-c path between base and ground.
(2) The voltage gain of the stage will be reduced and distortion will increase.
(3) The power output from the stage will decrease, with probable increase in distortion.
(4) Stage will operate normally except that temperature stabilization will not be as good as with R_2 in the circuit.

28. What is the difference between amplification factor and voltage gain?
(1) Amplification factor refers to the maximum voltage amplification that a tube is theoretically able to provide. Voltage gain refers to the actual voltage amplification obtained in a circuit, and is always less than the amplification factor.
(2) Same as (1), except that the gain may be either higher or lower than the amplification factor.
(3) Amplification factor refers to the ability of a tube to provide a high power output for a given input power. Voltage gain refers to the ability of a tube to provide a high signal voltage output in relation to the signal voltage input.
(4) The two terms mean essentially the same thing.

29. What turns ratio should a transformer have that is used to match a 200,000-ohm crystal microphone to the 1000 ohm input impedance of a transistor?
(1) 200 : 1 with the most turns on the primary.
(2) 200 : 1 with the most turns on the secondary.
(3) 14.1 : 1 with the most turns on the primary.
(4) 14.1 : 1 with the most turns on the secondary.
(5) None of the above.

30. For the high voltage amplification, choose a tube in which
(1) μ is high if a triode, and g_m is high if a pentode.
(2) μ is high if a pentode, and g_m is high if a triode.
(3) μ is high, while g_m and r_p is low.
(4) μ and g_m are both high.

31. For the best practical voltage gain from a pentode, the load impedance *RL* should be
(1) equal to the plate resistance of the tube.
(2) equal to twice the plate resistance of the tube.
(3) equal to three times the plate resistance of the tube.
(4) as high as it is practical to make it.

32. To get the highest power output from a triode tube possible without the distortion exceeding 5 per cent, the load impedance *RL* should be (Choose your answer from the selections for Question 31) ________.

33. If the plate resistance of V_1 in Fig. 38 is 10,000 ohms, the highest practical voltage gain is obtained from the V_1 stage when R_3 has a resistance of
(1) 10,000 ohms
(2) 20,000 ohms
(3) 30,000 ohms
(4) 50,000 ohms

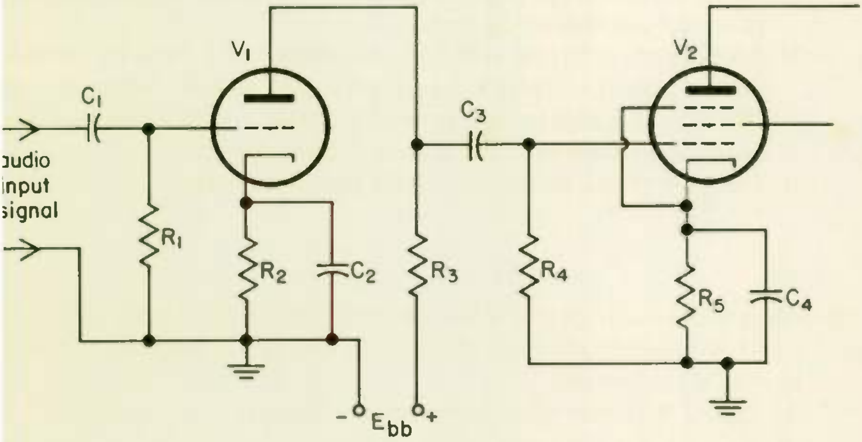

Fig. 38

END OF EXAM

SCHEMATIC DIAGRAM SYMBOLS	Loud speaker 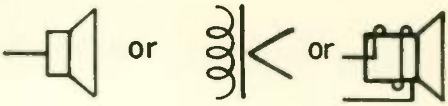
Inductor with air core 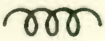	Fuse 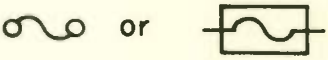
Inductor with iron core 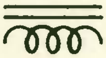	Neon lamp (note: the dot indicates that the tube is gas filled) 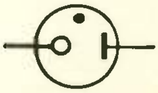
Inductor, value adjustable (air core) 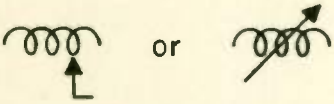	Crystal, piezoelectric 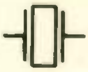
Inductor, adjustable by varying position of ferrite or powdered iron core 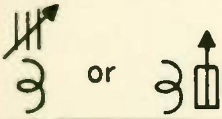	Microphone 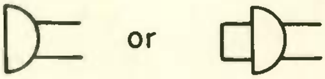
Transformer with iron core (leave out lines for air core) 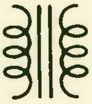	Headphones 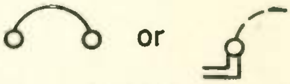
Transformer with adjustable ferrite or powdered iron core for circuit tuning 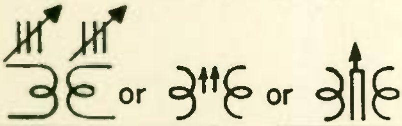	Ammeter and voltmeter 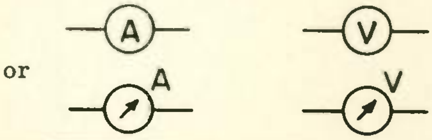
Antenna, A and B general symbols, C and D ferrite loop 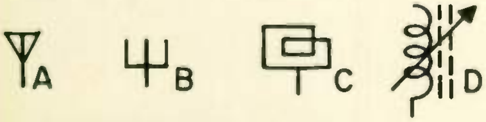	Relay 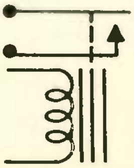

CLEVELAND INSTITUTE OF ELECTRONICS / CLEVELAND, OHIO

electronics

CLEVELAND INSTITUTE OF ELECTRONICS / CLEVELAND, OHIO

Untuned Amplifier Circuitry

2413-1

An AUTO-PROGRAMMED® Lesson

ABOUT THE AUTHOR

Through over 15 years experience in helping students learn through home study, Mr. Geiger has obtained an intimate understanding of the problems facing home-study students. He has used this knowledge to make many improvements in our teaching methods. The Cleveland Institute believes that students learn fastest when they actively participate in the lesson, rather than just reading it. Accordingly, you will find a section called "What Have You Learned?" after every topic. These sections will assist you in getting a firm grasp of the material just studied.

Mr. Geiger also edits much of our new lesson material, polishing up the manuscripts we receive from subject-matter experts so that they are easily readable, contain only training useful to the student in practical work, and are written so as to teach, rather than merely presenting information.

Mr. Geiger's book, *Successful Preparation for FCC License Examinations* (published by Prentice-Hall), was chosen by the American Institute of Graphic Arts as one of the outstanding text books of the year.

This is an AUTO-PROGRAMMED Lesson exclusive with the Cleveland Institute of Electronics. It is your assurance of the finest in technical education and training.

**Registered Trademark*

Accredited by the Accrediting Commission of the National Home Study Council

The Accrediting Commission has been approved by the U S Office of Education as a "nationally recognized accrediting agency".

CLEVELAND INSTITUTE OF ELECTRONICS

Untuned Amplifier Circuitry

By DARRELL L. GEIGER
Senior Project Director
Cleveland Institute of Electronics

2413-1

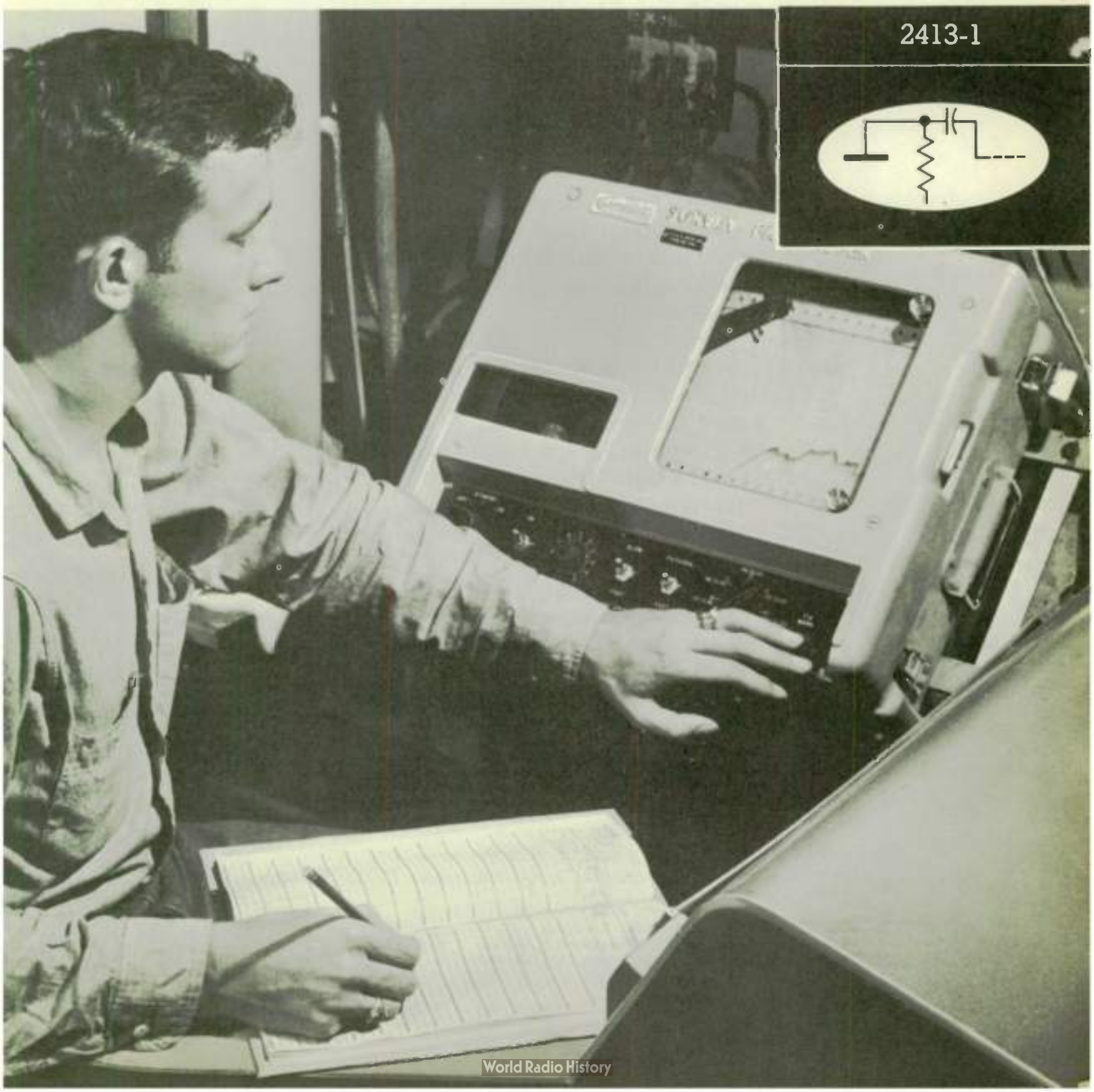

In this lesson you will learn...

Frontispiece: *This chart-making fathometer depth sounder makes surveys of ocean and harbor floors to keep navigation charts up-to-date. Many untuned circuits such as studied in this lesson are used in this equipment.* Photo: Courtesy, Raytheon Co.

FIRST EDITION/Second Revised Printing/December, 1967.

2413-1

A chat with your instructor

This lesson is primarily devoted to the use of vacuum tubes in untuned circuits suitable for amplifying frequencies from 50 to 15,000 Hz. Such untuned amplifiers are generally known as audio amplifiers because the frequencies amplified are mostly within the sound frequency range of the human ear. However, it should be understood that "audio amplifiers" today have a great many important uses that do not involve the reproduction of sound as, for example, in computers, telemetry, and instrumentation.

Although we have all heard about how transistors are replacing vacuum tubes, the fact is that there are more tube types manufactured today—and more tubes sold—then ever before, and new tube types are coming out every day. Tubes will be around for a long time to come, and the top-notch technician must understand them well. The load line—and how it affects gain and performance—is one important subject in this lesson that will help you understand amplifiers better.

A substantial section of this lesson is devoted to negative feedback amplifiers. These amplifiers use a feedback loop for improved performance over ordinary amplifiers. The principle of the closed feedback loop has many applications besides improving amplifier performance. It is used for automatic frequency control, for automation, and in servo systems.

Untuned Amplifier Circuitry

FACTORS AFFECTING STAGE GAIN

Figure 1(a) shows a voltage amplifier stage of an ordinary untuned (audio) amplifier, which is no different from circuits you have already studied. The purpose of the stage is to amplify the incoming voltage signal E_g in

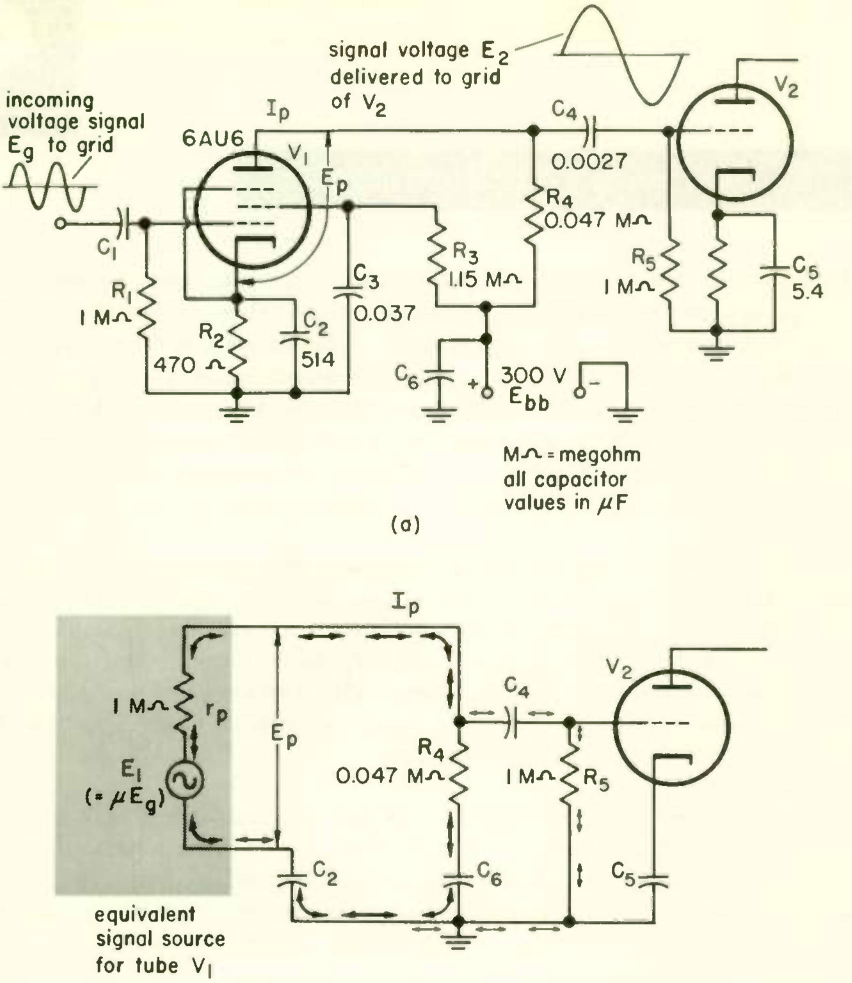

Fig. 1 An untuned voltage amplifier stage with equivalent signal source and signal current path.

such a manner that a much stronger signal voltage E_2 is applied to the grid of V_2. Tube V_2 further amplifies the signal, of course, but that is not our concern at this time. Our objective in this section is to see what circuit factors determine the strength of the signal voltage E_2 reaching the grid of V_2.

1

EQUIVALENT SIGNAL CIRCUIT FOR A TUBE . . . Tube V_1 in Fig. 1(a) can be considered as a generator of an a-c signal; that is, V_1 is an a-c voltage source. Up to now you have likely thought of vacuum tubes as generators when they are used as oscillators and as amplifiers when used as in Fig. 1(a). However, V_1 is also a generator because the a-c signal it puts out is far stronger than the small signal coming into the grid. The signal to the grid of V_1 can be considered as an excitation signal to cause V_1 to act as a generator or signal source.

V_1 has the advantage over an ordinary oscillator in that the amplitude of the output signal can be readily controlled. Just vary the grid excitation signal and the generator output signal is varied accordingly. Of course, V_1 would usually be said to be amplifying, and that would be entirely correct. But in electronics it is often possible to have several points of view as to how a device works. We then use the point of view most suitable for our purpose. For analyzing the operation of an amplifier stage, the best point of view is to consider the tube as a signal generator.

The shaded area of Fig. 1(b) is the equivalent circuit for V_1 as a signal generator. It consists of a constant-voltage signal generator E_1 in series with a resistance r_p. The signal source voltage E_1 is equal to the signal voltage E_g on the grid multiplied by the amplification factor μ of the tube. Resistance r_p is the plate resistance of the tube. When we refer to E_1 as a constant-voltage generator, we mean that varying the load being fed by the generator (mainly R_4) will not change the value of E_1. As already mentioned, varying the excitation signal E_g will vary E_1 accordingly, the ratio of E_1 to E_g always being μ.

Although changing the load into which the signal output from V_1 works does not change E_1, it does change the value of the plate signal voltage E_p in Fig. 1(a) and (b). That is because the voltage drop across r_p, the plate resistance of the tube, varies with changes in the load current.

Now let's look at the rest of the circuitry in Fig. 1(b). Notice that no d-c voltages or currents are shown. That is because we are studying the action of the a-c signal generated by the tube, and therefore we need not consider d-c paths and values. The purposes of the d-c voltages and currents are to make the tube operate and to furnish the energy for the a-c signal being generated. It is because of the d-c voltages on the tube that we are able to generate E_1. It is assumed in Fig. 1(b) that we have developed E_1, and now we want to see what E_1 does. For that purpose, we need not consider d-c voltages and currents any further.

In Fig. 1(b) E_1 and r_p replace the tube, and the rest of the drawing shows

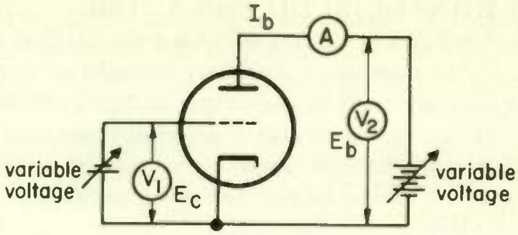

Fig. 2

the parts of the stage in which the signal current I_p produced by voltage E_1 flows. Since R_5 is much greater than R_4, most of the signal current goes through R_4 and only a little goes through R_5.

WHAT HAVE YOU LEARNED?

1. (Review) The amplification factor, or μ, is defined as the ratio of a small change of (a) *(plate voltage* E_b*)(control grid voltage* E_c*)* to the change in (b) __________________________ required to keep I_b, the plate current, (c) *(varying)(constant)*.

2. Refer to Fig. 2. Ammeter *A* reads plate current I_b; voltmeter V_1 reads grid voltage E_c; and voltmeter V_2 reads plate voltage E_b. The circuit can be used to find the values of μ, r_p, and g_m. To calculate the value of μ, you first read the values on all three meters. We will assume that *A* is 10 mA, V_1 is 5 V, and V_2 is 150 V. First vary E_c and then vary E_b until the reading of *A* is once again at its original reading of 10 mA. Now read V_1 and V_2. We will assume the new readings are $V_1 = 5.5$ V and $V_2 = 175$ V. The value of μ is _______.

3. (Review) The amplification factor μ actually indicates how large a plate voltage change is required to have the same effect upon plate current as a 1 V change of _______.

4. (Review) The plate resistance r_p of a tube is the ratio of a change in plate voltage to the change in (a) *(*E_b*)(*I_b*)(*E_c*)* caused by the change in plate voltage while the value of (b) *(*E_b*)(*E_c*)(*I_b*)* is held constant.

5. Refer to Fig. 2. To calculate r_p you would first read (a) *(A)(A and* V_2*) (*V_1 *and* V_2*)*. Next, while making sure E_c was held constant, you would vary (b) _______. You would then read (c) _______ and (d) _______.

6. Refer to Problem 5. Assume the readings in 5(a) were $A = 15$ mA and $V_2 = 225$ V. If your readings in 5(c) and (d) were $V_2 = 210$ V and $A = 14.5$ mA, calculate the value of r_p.

7. (Review) The transconductance of a tube is the ratio of the change in (a) *$(E_b)(E_c)(I_b)$* to the change in (b) ______ which caused the change in plate current with the plate voltage held constant.

8. Refer to Fig. 2. Assume the readings of the three meters are $A = 12$ mA, $V_1 = 10$ V, and $V_2 = 175$ V. To calculate the transconductance g_m you would vary (a) ______ while holding E_b at its original 175 V. Then you would read (b) ______ and (c) ______. Assume the readings of (b) and (c) were 9.5 V and 11 mA. The value of the transconductance g_m is (d) ______ μmhos.

9. (Review) The transconductance g_m actually indicates how large a change in I_b occurs when the plate voltage remains constant and the grid voltage changes by one volt. If g_m is 2000 μmho and E_c varies 1 V, I_b varies ______ amperes.

10. (Review) The formula for r_p in terms of μ and g_m is $r_p = \frac{\mu}{g_m}$. The formula for μ is (a) ________, and the formula for g_m is (b) ________.

11. (Review) The amplification factor μ represents the (a) *(maximum) (minimum)* gain the tube stage can theoretically achieve. The stage gain is the ratio of (b) *(output signal voltage)(input signal voltage)* to (c) ________________ and represents the actual stage gain, which is always (d) *(greater than)(less than)* the value of μ.

12. A tube such as the one in Fig. 1 can be considered either as a constant voltage (a) ____________ in series with its plate resistance or as an (b) ____________.

13. Refer to Fig. 1(b). The value of E_1 (a) *(does)(does not)* vary when the load on the generator varies, but E_1 does vary when (b) *$(E_p)(E_g)(R_4)$* varies. If E_g is 10 mV and μ is 100, E_1 is (c) ______ volts. If E_g changed to 8 mV, the value of E_1 would be (d) ______ volts.

14. The value of E_p (a) *(does)(does not)* vary as the generator load varies because the voltage drop across (b) ______ varies. Signal voltage E_1 is equal to the sum of E_p and (c) ______.

ANSWERS

1. (a) Plate voltage E_b; (b) control grid voltage E_c; (c) constant

2. 50 . . . $\mu = \dfrac{\text{change in plate voltage } E_b}{\text{change in grid voltage } E_c}$ with plate current I_b constant. $\mu = \dfrac{175 - 150}{5.5 - 5} = \dfrac{25}{0.5} = 50.$

3. E_c, the control grid voltage 4. (a) I_b; (b) E_c

5. (a) A and V_2; (b) E_b; (c) and (d) A and V_2 in either order

6. 30 kΩ . . . $r_p = \dfrac{\text{change in plate voltage } E_b}{\text{change in plate current } I_b}$ with the control grid voltage E_c constant.

$$r_p = \frac{225\text{ V} - 210\text{ V}}{15\text{ mA} - 14.5\text{ mA}} = \frac{15\text{ V}}{0.5\text{ mA}} = 30{,}000\ \Omega$$

7. (a) I_b; (b) E_c

8. (a) E_c (b) and (c) V_1 and A in either order (d) 2000 . . .

$$g_m = \frac{\text{change in plate current } I_b}{\text{change in grid voltage } E_c}$$

with plate voltage E_b constant.

$$g_m = \frac{12\text{ mA} - 11\text{ mA}}{10\text{ V} - 9.5\text{ V}} = \frac{1\text{ mA}}{0.5\text{ V}}\ 2 \times 10^{-3}\text{ mhos, or } 2000\ \mu\text{mhos}$$

9. 0.002 . . . $g_m = \dfrac{\text{change in } I_b}{\text{change in } E_c}$

$$\text{Change in } I_b = (g_m)(\text{change in } E_c) = 2000\ \mu\text{mhos} \times 1\text{ V}.$$

$$\text{Change in } I_b = 0.002\text{ mho} \times 1\text{ V}$$

Since 1 mho $= 1\ \dfrac{\text{A}}{\text{V}}$

$$\text{Change in } I_b = 0.002\ \frac{\text{A}}{\cancel{\text{V}}} \times 1\ \frac{\cancel{\text{V}}}{1} = 0.002\text{ A}$$

10. (a) $\mu = g_m r_p$; (b) $g_m = \dfrac{\mu}{r_p}$

11. (a) Maximum; (b) output signal voltage
(c) Input, signal voltage; (d) less than

12. (a) Generator; (b) amplifier

13. (a) Does not; (b) E_g
(c) 1 . . . $E_1 = \mu E_g = 100 \times 10 \times 10^{-3}\text{ V} = 1\text{ V}$ (d) 0.8 V

14. (a) Does (b) r_p (c) E_{R_4} . . . Refer to Fig. 1(b). The voltage E_1 is the supply voltage for the series circuit consisting of r_p, R_4, C_6, and C_2. Since the capacitors are assumed to be large enough to cause no voltage losses at the frequency of E_1, the sum of the voltage drops across r_p and R_4 is equal to the supply voltage E_1.

2 WHAT DETERMINES STAGE GAIN . . . We can further simplify the equivalent circuit of Fig. 1(b). Capacitors C_2, C_4, and C_6 can be con-

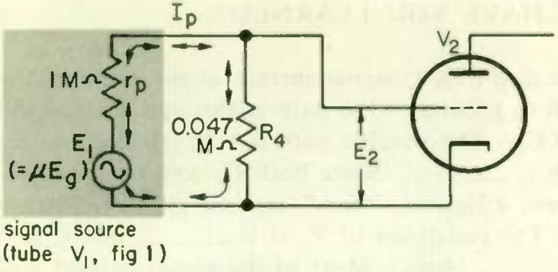

Fig. 3 **Basic equivalent signal circuit for Fig. 1, showing the development of signal E_2 for feeding V_2.**

sidered large enough that the signal passes through them with only slight loss, and therefore they are replaced by conductors in the equivalent circuit of Fig. 3. Also, R_5 is omitted in Fig. 3 because it takes only a small part of the signal current.

Figure 3 is simple enough that it is fairly easy to see what factors affect the gain of the stage, which is the ratio of E_2 and E_g. If the plate resistance r_p were zero, the E_2 would be equal to E_1 and the gain would be equal to the amplification factor μ of the tube. That would be the greatest gain that it is theoretically possible to obtain. However, all practical tubes have an r_p greater than zero, and the voltage drop across it caused by I_p flowing through it reduces E_2 to a lower value than E_1 and thus reduces the gain of the stage.

For a given value of r_p, the lower I_p is, the less the signal loss across r_p will be. The greater we make resistance R_4, the lower I_p will be, so that the signal loss in r_p is less and the gain of the stage is more. If we could take R_4 out all together and make an open circuit, the I_p would be zero and the gain would again be equal to μ. Unfortunately, we can't take out R_4 and we can't make it too large. Resistor R_4 serves the purpose of making a path through which we can get our needed d-c operating plate voltage to the tube, as can be seen in Fig. 1(a). If R_4 were too great in value, the d-c voltage drop across it would be so great that the d-c plate voltage would be too low to operate the tube properly.

Using the point of view of preceding lessons, we would say that R_4 blocks the signal current output from the tube, forcing a signal voltage to appear at the grid of V_2. Unfortunately, because of the limited maximum practical value that can be used for R_4, it doesn't do this job nearly as well as we would like. If R_4 could be made infinite, it would block the signal current completely, and E_2 would be equal to E_1. In any practical circuit, E_2 is far less than E_1.

WHAT HAVE YOU LEARNED?

1. Refer to Fig. 1(a). The (a) *(d-c)(a-c)* signal current at the plate of the tube "sees" a parallel path to ground. One path is through R_4 and the (b) *(high)(low)* reactance of C_6. The parallel path is through the low reactance of C_4 and through (c) ______. Since both C_4 and C_6 have low reactance, the signal current effectively "sees" R_4 and R_5 in (d) *(series) (series-parallel)(parallel)*. The resistance of R_4 is (e) ______ ohms, and the resistance of R_5 is (f) ______ ohms. Most of the signal current will flow to ground through (g) ______, because the resistance of R_5 is almost 23 times (h) ______________ than R_4.

2. Refer to Fig. 1. The greater the resistance of R_4 the (a) *(greater)(lower)* the value of I_p; the gain of the stage (b) *(increases)(decreases)* because the voltage drop across r_p (c) ______________. However, if the resistance of R_4 is too large, the (d) *(d-c)(a-c)* operating voltage on the plate of the tube becomes too (e) ______ and the tube no longer functions properly.

ANSWERS

1. (a) a-c; (b) low; (c) R_5; (d) parallel
(e) 47,000; (f) 1,000,000; (g) R_4; (h) greater
2. (a) Lower; (b) increases; (c) decreases; (d) d-c; (e) low

3 SIGNAL VOLTAGE GAIN FROM A PENTODE . . . The voltage gain of any amplifier is equal to gain $= \frac{E_{\text{out}}}{E_{\text{in}}}$. Therefore, in Fig. 3, the gain of the stage is equal to $\frac{E_{R_4}}{E_1}$. However E_{R_4} equals I_pR_4. To find the stage gain, then, we must first find the value of I_p. So that there is no misunderstanding, let us repeat that I_p is the a-c signal current from the plate. The total plate current consists of I_p plus the d-c current (usually represented by the symbol I_b) from the power supply needed for operating the tube.

Finding the approximate value of I_p in Fig. 3 is easier than you might suppose if you know the value of g_m. The transconductance g_m is merely a constant that can be multiplied by the input signal E_g to give you I_p. That is, $I_p = g_mE_g$. In a pentode, this formula is true regardless of the size of the plate load resistance (R_4 in Fig. 3) because the plate resistance r_p of a pentode is very high as compared with the load resistance. Since the plate resistance of a pentode is very high, *pentode tubes can be considered as being approximate constant-current sources*. That is, I_p will have about the same value for any practical value plate load resistance.

As an example, consider Fig. 3. Since R_4, the load in Fig. 3, is much smaller than the resistance of the signal source, the signal source can be considered as being a constant-current source. The plate resistance r_p of the 6AU6 tube in Fig. 3 is many times greater than the resistance of the load, which is only 0.047 MΩ. Because of the limitation on the maximum size of the load resistance, it is usual for the load on a pentode tube to be only a small fraction of the plate resistance.

Multiplying I_p by R_4, Fig. 3, gives us E_2. Since I_p equals $E_g g_m$, we can substitute $E_g g_m$ for I_p. Thus $E_2 = g_m E_g R_4$. Now to find the voltage gain of the stage,

$$\text{voltage gain } A_v = \frac{E_2}{E_g} = \frac{g_m E_g R_4}{E_g} = g_m R_4$$

Since R_4, the plate load resistance, is normally designated by R_L, the general equation for voltage gain of a pentode is

$$\text{voltage gain } A_v = g_m R_L \tag{1}$$

This formula shows that the important tube parameter that determines the stage gain of a pentode is not the amplification factor μ, but the transconductance g_m. We get the highest practical voltage gain from a pentode by selecting a tube with a high g_m and by making the plate load impedance as high as practical.

WHAT HAVE YOU LEARNED?

1. (Review) When the grid voltage of a pentode tube is held constant, large variations in plate voltage will cause (a) *(large)(slight)* variations in plate current. The fraction $\frac{\text{change in plate voltage } E_b}{\text{resulting change in plate current } I_b}$ will have a (b) *(high)(low)* value because the denominator, the change in plate current, is small. Since the formula for plate resistance is $r_p = \frac{\Delta E_b}{\Delta I_b}$ (Δ means "change in"), the plate resistance of a pentode is (c) *(high)(low)*.

2. If you were designing a pentode tube circuit and wanted a tube that would give you a large voltage gain, you would select a tube that had a high value of $(\mu)(r_p)(g_m)$.

3. Refer to Fig. 3. Assume that the pentode tube has a transconductance g_m of 5200 µmhos. If a signal voltage of 0.5 V is applied to the grid of the

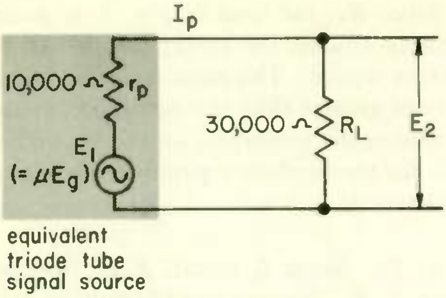

Fig. 4 When a triode is used as a voltage amplifier, R_L is commonly greater than R_p.

pentode, the value of I_p will be (a)________ milliamperes. The voltage across R_2 (also known as the plate load resistor R_L) is the voltage E_2, and it has a value of (b)________ volts. The voltage gain A_v of the stage is E_2 divided by E_g. Use the answer of (b) to find the value of A_v, which is (c)________.

4. Use formula 1 to find the gain of the stage in Fig. 3. Compare your answer with the answer of Problem 3(c).

ANSWERS

1. (a) Slight . . . Since the screen grid and suppressor grid are between the control grid and plate, the plate is effectively isolated from the control grid. Because of the isolation the plate potential has very little effect upon the electrons in the control grid region. (b) High (c) High 2. g_m

3. (a) 2.6 . . . $I_p = g_m E_g = 5200 \times 10^{-6} \times 0.5 = 2600 \times 10^{-6} = 2.6 \times 10^{-3}$ A, or 2.6 mA

(b) 122.2 . . . $E_2 = I_p \times R_L = 2.6 \times 10^{-3} \times 47 \times 10^3 = 2.6 \times 47 = 122.2$ V.

(c) 244.4 . . . $A_v = \dfrac{E_2}{E_g} = \dfrac{122.2\text{ V}}{0.5\text{ V}} = \dfrac{1222}{5} = 244.4$

4. 244.4 . . . $A_v = g_m R_L = 5200 \times 10^{-6} \times 47 \times 10^3 = 5200 \times 10^{-3} \times 47 = 5.2 \times 47 = 244.4$. The value of A_v is identical with the value of A_v found in Problem 3(c).

4 SIGNAL VOLTAGE GAIN FROM A TRIODE TUBE

. . . The plate resistance of a triode is far lower than that of a pentode. It is quite practical and common to use a value of load R_L with a triode that is higher than r_p, as in Fig. 4. The triode tube thus performs more like a constant-voltage source, and as a result the amplication factor μ is the tube parameter that determines the voltage gain of a triode.

To find the voltage gain in Fig. 4 we first find I_p and then find E_2:

$$I_p = \frac{E_1}{r_p + R_L} = \frac{\mu E_g}{r_p + R_L}$$

$$E_2 = I_p R_L = \frac{\mu E_g R_L}{r_p + R_L}$$

$$\text{voltage gain (triode stage)} = \frac{E_2}{E_g} = \frac{\mu R_L}{r_p + R_L} \tag{2}$$

Formula 2 shows that we obtain the highest practical gain with a triode stage when the tube selected has a high μ and R_L is as high as practical.

WHAT HAVE YOU LEARNED?

1. A pentode tube has a very high plate resistance and is considered an approximate constant (a) *(current)(voltage)* source. The triode tube has a plate resistance much (b) *(greater)(lower)* than that of the pentode. The triode tube is considered as an approximate constant (c) ________ source.

2. The predominant parameter in a triode that determines stage voltage gain is (a) $(\mu)(r_p)(g_m)$, and the predominant parameter of the pentode tube is the (b) ________.

3. Refer to Fig. 4. If μ is 35 and the signal voltage applied to the grid of the triode is 4 V, the value of E_1 is (a) ________ volts. The value of I_p is (b) ________ milliamperes, and the voltage across R_L will be (c) ________ volts. The voltage gain A_v is equal to the ratio of the signal voltage across R_L to the signal voltage E_g and is equal to (d) ________.

4. Use formula 2 to determine the gain of the stage A_v. Compare your answer with the answer of Problem 3(d).

ANSWERS

1. (a) Current; (b) lower; (c) voltage   2. (a) μ; (b) g_m

3. (a) 140 . . . $E_1 = \mu E_g = 35 \times 4 = 140$ V

(b) 3.5 . . . $I_p = \dfrac{E_1}{r_p + R_L} = \dfrac{140}{10{,}000 + 30{,}000} = \dfrac{140}{40 \times 10^3}$

$$= \frac{140 \times 10^{-3}}{40} = 3.5 \times 10^{-3} = 3.5 \text{ mA.}$$

(c) 105 . . . $E_2 = I_p R_L = 3.5 \times 10^{-3} \times 30 \times 10^3 = 105$ V.

(d) 26.25 . . . $A_v = \dfrac{E_2}{E_g} = \dfrac{105}{4} = 26.25$

4. 26.25 . . . $A_v = \dfrac{\mu R_L}{r_p + R_L} = \dfrac{35 \times 30 \times 10^3}{10 \times 10^3 + 30 \times 10^3} = \dfrac{1050 \times 10^3}{40 \times 10^3} = 26.25$

The answer using formula 2 is identical with the answer to 3(d).

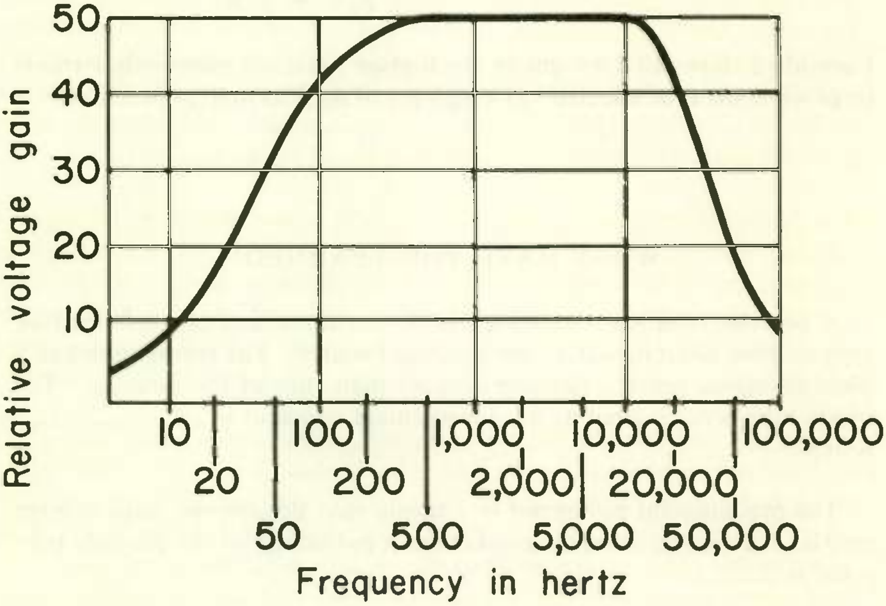

Fig. 5 Typical ordinary *RC*-coupled audio amplifier response curve.

5 VOLTAGE GAIN FOR PRACTICAL *RC*-COUPLED AMPLIFIERS

. . . The voltage gain actually obtained from a practical *RC*-coupled untuned amplifier will always be less than the value given by formula 1 for a pentode and by formula 2 for a triode. That is because of simplifications made in drawing the basic equivalent circuits of Figs. 3 and 4. For one thing, the signal current taken by R_5 in Fig. 1(b) was not considered. Because of this current, the current through R_4 is somewhat less than I_p, and therefore the signal voltage drop across R_4 will be less than $I_p R_4$, which is the value we used for E_2. Also, formula 1 assumes the tube to be a true constant-current source. If R_4 were larger than the value shown, perhaps as much as a quarter or half of r_p, then I_p would be substantially less than $g_m E_g$ and the gain would therefore be less than given by formula 1.

At low audio frequencies the coupling capacitor C_4 in Fig. 1(b) may be responsible for considerable reduction in gain. We have assumed that the voltage drop across C_4 is negligible, and that is true at medium and high audio frequencies. But unless C_4 is very large, its reactance at low audio frequencies is great enough to cause a serious signal loss. Because of this there is a minimum (usually somewhat below 100 Hz) frequency below which the amplifier cannot be used; see Fig. 5.

The substantial reactance of the cathode resistor bypass capacitor C_2 and the screen bypass capacitor C_3 at low audio frequencies further reduces the low-frequency gain of an audio amplifier. Unless essentially all of the signal passes through the cathode bypass capacitor (and not through the cathode bias resistor), *degeneration* will occur, which will reduce the stage gain. Degeneration will be explained further on in the lesson.

For proper operation of a pentode tube, the screen grid must be kept at cathode potential to the signal. If the reactance of the screen bypass capacitor is high enough that there is a noticeable signal voltage drop across it, the stage gain is reduced because this signal drop opposes signal source voltage E_1 in Fig. 1(b) and thus reduces the equivalent circuit value of E_1.

At frequencies above 10,000 Hz or so, frequency response also drops off, and the amplifier is unusable above a certain frequency. The high-frequency dropoff is caused by certain unavoidable capacitances associated with the tube and wiring. The wiring between the stages in Fig. 1(a) acts like the plate of a capacitor, the chassis being the other plate. At high audio frequencies the reactance of this stray wiring capacitance is sufficiently low that some of I_p flows through this capacitance. Figure 6 shows how the stray wiring capacitance C_w is in shunt with R_4. We saw how some of I_p flowing through R_5 reduced the gain. Losing more of I_p through C_w further reduces the signal current through R_4 and thus further reduces the gain.

There are other capacitances shunting R_4 besides C_w. One of them is C_g in Fig. 6. This is the input capacitance within the tube that the signal on the grid sees. It results from the fact that the elements within the tube also act as the plate of a capacitor. Another capacitor that shunts part of the signal current I_p away from R_4 is C_p, the interelement capacitance between plate and cathode of tube V_1. All these capacitances taken together shunt off I_p to the point where the stage gain is very little at high frequencies. Figure 5 shows a typical frequency response curve for an ordinary *RC*-coupled amplifier, such as the one in Fig. 1(a).

The frequency response bandwidth of an untuned amplifier can be in-

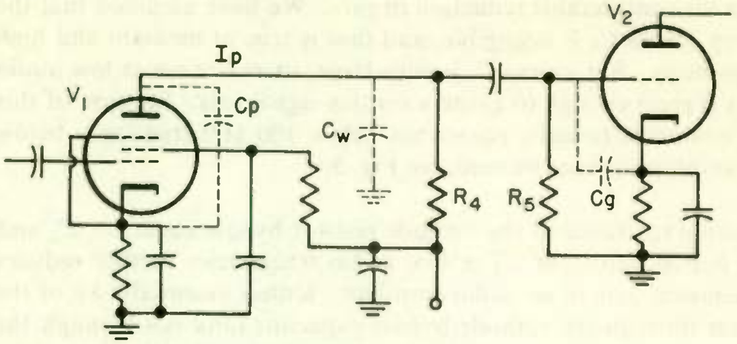

Fig. 6 Figure 1(a) redrawn to show stray capacitances.

creased by lowering the load impedance (R_4 in Fig. 6). Since it is then easier for the signal to get through the intended load, not so much is lost through the shunting capacitances.

WHAT HAVE YOU LEARNED?

1. (Review) Frequency response curves are drawn by plotting voltage, current, or (a) __________ against frequency. When the current through the plate load of an amplifier is plotted against the operating frequency of the amplifier, the bandwidth of the amplifier is the band of frequencies that lies between the two points on the curve that are (b) *(0.318)(0.5)(0.637)(0.707)* times the maximum current value. If power instead of current is plotted, answer (b) will be (c) ________.

2. What is the bandwidth in Fig. 5?

3. Refer to Fig. 1. The ideal reactance at low frequencies of capacitors C_2, C_3, and C_4 is (a) ________ ohms. Since practical capacitors do have reactance at low frequencies, there (b) *(is)(is not)* a loss of signal strength across these capacitors.

4. Refer to Fig. 6. The ideal reactance at high frequencies of capacitors C_p, C_w, and C_g is (a) *(infinite)(zero ohms)*. If the three capacitors had this value of reactance, there (b) *(would)(would not)* be a loss of signal current through them.

5. Assume you had an amplifier such as the one in Fig. 1(a). If you wanted to extend the amplifier low-frequency response, one possible method would be to replace C_2, C_3, C_4, and C_5 with *(larger)(smaller)* values of capacitance.

6. Refer to Fig. 6. One way to increase the high-frequency response *(would)(would not)* be to directly shunt C_p and C_w with inductors to form parallel tanks resonant at high frequency.

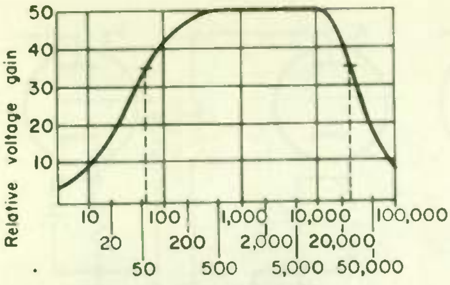

Fig. 7

ANSWERS

1. (a) Power (b) 0.707 . . . By definition, the bandwidth of a frequency response curve is the band of frequencies that lies between the two points on the curve that are 0.707 times the maximum current. (c) 0.5 . . . The power is proportional to the square of the current ($P = I^2R$). 0.707^2 is 0.5.
2. 25 kHz . . . The bandwidth is between the two points that are 0.707 times the maximum value, or $50 \times 0.707 = 35.35$. See Fig. 7. We mark the two points on the curve that are at a value of 35 and drop vertical lines straight down to the horizontal base line, which is a nonlinear scale. Note from the values along the base line that the graph is a semilog graph. The low side of the bandwidth is about 54 Hz, and the high side of the bandwidth is about 26,000 Hz. Thus the bandwidth is $26{,}000 - 54 = 25{,}046$ Hz, approximately.
3. (a) Zero; (b) is 4. (a) Infinite; (b) would not
5. Larger . . . The reactance of the larger capacitance values would be less at the lower frequencies.
6. Would not . . . If the inductors were directly shunted across the two capacitors, their low ohmic resistance would short the d-c plate voltage to ground.

6 VOLTAGE GAIN WITH OTHER COUPLING METHODS...The impedance coupling method of Fig. 8(a) has the advantage that the d-c plate voltage E_b is nearly equal to the supply voltage E_{bb}. With *RC* coupling, E_b would be much lower due to the voltage drop across the load resistor.

The mid-frequency voltage gain in this type of circuit is calculated using the voltage gain formula for a triode stage. However, use the resistance value of R_g for R_L in the formula. This formula again is the result of simplification of the equivalent circuit as discussed in Topic 5 for the *RC*-coupled circuit except that here we are ignoring the a-c current through *L* instead of R_g. *L* is designed to have a much greater impedance than R_g at the desired frequency range.

The transformer coupled circuit of Fig. 8(b) will provide higher voltage gain than an *RC*-coupled circuit because the step-up transformer also boosts the amplitude of the signal voltage. Since the secondary load of transformer *T* is essentially an open circuit, the primary will appear as a

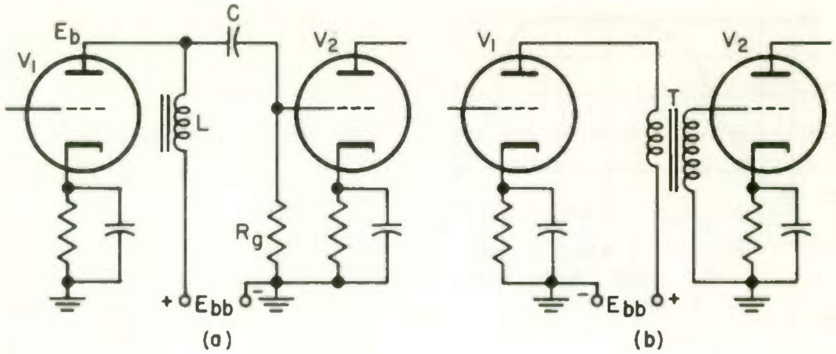

Fig. 8 Voltage amplifiers using other than *RC* coupling.

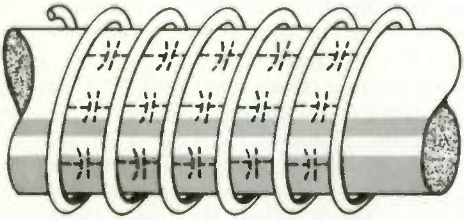

Fig. 9 Enlarged section of an inductor. The dashed capacitors represent the distributed capacitance between the turns of the wire.

large inductance in the plate circuit of tube V_1. In a practical circuit, the reactance of the primary of T in the plate circuit of V_1 will be much greater than the plate resistance of V_1 for the middle frequencies. Therefore, at the middle frequencies, r_p may be neglected and the formula for voltage gain of a triode reduces to Gain $= \mu R_L/R_L = \mu$. The overall stage gain is the voltage gain from the grid of V_1 to the grid of V_2. To find the stage gain, we multiply the gain due to V_1 by the voltage step up ratio of the transformer.

The middle frequencies are a range of frequencies over which the frequency response curve may be considered flat for practical purposes. When an inductor or transformer is used as a plate load, it is difficult to obtain a wide mid-frequency response since the impedance in the plate circuit changes with frequency. If transformer coupling is used, the gain due to the triode is less than μ for frequencies which are higher and lower than the mid-range. At the higher and lower frequencies, the impedance of the transformer primary is no longer much greater than r_p. The reactance of an inductor is low at frequencies less than the mid-range. At frequencies above the mid-range the reactance of a practical inductor decreases due to distributed capacitance between each turn of wire and layers of wire as illustrated in Fig. 9. This distributed capacitance actually shunts the inductor and at high frequencies will provide a low impedance current path which effectively bypasses the inductance.

The frequency response will be poor unless a bulky and expensive transformer is used; it is difficult to design a transformer to respond evenly over a wide audio frequency range.

Neither of the circuits in Fig. 8 is much used for voltage amplifier coupling between tube stages. *RC* coupling is inexpensive, nonbulky, light in weight, more troublefree, and it has better frequency response.

WHAT HAVE YOU LEARNED?

1. When impedance coupling is used, the values of d-c plate voltage E_b and source voltage E_{bb} are (a) *(equal)(far from equal)(nearly equal)*. The reason is that the (b) *(resistance)(reactance)* of the inductor is (c) *(high) (low)*.

2. When *RC* coupling is used, the difference between d-c plate voltage E_b and source voltage E_{bb} is considerably (a) *(less than)(more than)* the voltage difference when impedance coupling is used. The reason is that the resistance of the plate load resistor R_L is considerably (b) *(less than)(more than)* the resistance of the inductor.

3. Refer to Problems 1 and 2. For the same d-c operating plate voltage on a given tube, *RC* coupling would require a source voltage E_{bb} (a) *(equal to)(less than)(greater than)* the source voltage required for impedance coupling. The use of impedance coupling, as opposed to *RC* coupling, would (b) *(widen)(narrow)* the bandwidth of the tube amplifier.

4. Refer to Fig. 8(b). Assume the value of the input signal voltage E_g to the grid of V_1 is 1.5 mV, and the gain due to V_1 is 40. Ignoring any losses, the voltage across the primary of transformer *T* is (a) ________ volts. If transformer *T* has a step-up ratio of 2 to 1, the value of the signal voltage applied to tube V_2 is (b) ________ volts. The gain of the stage of V_1 is (c) ________.

5. (Partly review) An inductor (a) *(does)(does not)* have a distributed capacitance. The reactance of a capacitor varies (b) *(directly)(inversely)* as the frequency of the voltage applied across its plates. A low value of gain is due to the (c) ________________________________ of an inductor at the (d) *(higher) (lower)* frequencies.

6. The reactance of an inductor varies (a) *(directly)(inversely)* as the frequency of the voltage applied across it. The use of an inductor as the

plate load of a tube will cause a (b) *(large)(small)* variation of plate load impedance over a wide frequency range. The gain of a tube using an inductor as a plate load impedance will (c) *(remain nearly constant)(vary considerably)* over a wide frequency range.

7. The higher the operating frequency of an inductor, the (a) *(greater) (lower)* the inductive reactance, and the reactance of the distributed capacitance (b) *(increases) (decreases)*. The gain of the transformer-coupled amplifier at the medium frequencies does not change greatly because the (c) ________________ due to the distributed capacitance is still relatively (d) *(high) (low)* compared to the inductive reactance. As the operating frequency further increases, a point is reached where the capacitive reactance is so (e) *(high) (low)* that the inductance is effectively shorted by the distributed capacitance. The gain of the stage will be very (f) *(high) (low)*.

8. The frequency response of an *RC*-coupled amplifier is (a) *(wider) (narrower)* than the frequency response of an impedance-coupled amplifier because the resistance of the plate load resistor (b) *(does)(does not)* vary greatly with frequency and the reactance of the plate load inductor (c) ________ vary greatly with frequency.

ANSWERS

1. (a) Nearly equal (b) Resistance (c) Low . . . The d-c, or ohmic resistance of the windings is low; thus the d-c voltage drop across the inductor is low, and the d-c voltage applied to the plate of the tube is nearly equal to E_{bb}. Note that the circuit is more efficient; very little d-c power is wasted in the inductor because its resistance is very low. In an *RC* circuit, a considerable amount of power is wasted as heat in the plate load resistor.

2. (a) More than; (b) more than 3. (a) Greater than; (b) narrow

4. (a) 0.06 . . . $1.5 \times 10^{-3} \times 40 = 60 \times 10^{-3} = 0.06$ V (b) 0.12; (c) 80

5. (a) Does; (b) Inversely; (c) distributed capacitance
(d) Higher . . . See Fig. 9. The dashed capacitors show how, at the higher frequencies, the a-c current flows through the tiny capacitors and thus the signal current at the higher frequencies is lost through the distributed capacitance.

6. (a) Directly; (b) large; (c) vary considerably

7. (a) Greater; (b) decreases; (c) capacitive reactance
(d) High; (e) low; (f) low

8. (a) Wider; (b) does not; (c) does

7

FACTORS DETERMINING POWER GAIN . . . Our discussion so far has pertained to voltage amplifiers. Our object was to get as high a signal voltage as practical to the grid of the following stage. Since negligible signal current and signal power is required to excite the grid of a tube operating class A, voltage gain was the only consideration. The final stage of an audio amplifier must nearly always provide power amplification, since energy is generally required to operate the device fed by the ampli-

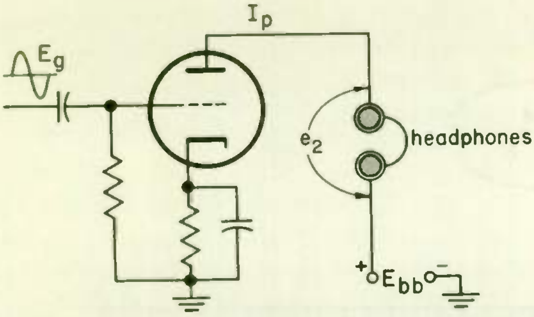

Fig. 10 The greatest power is delivered to the phones when $e_2 \times I_p$ is greatest.

fier. Since the signal power is the product of the signal voltage multiplied by the signal current, both the voltage gain and the current gain must be considered in a power amplifier.

Figure 10 shows a triode tube feeding the signal to a set of headphones. The amplitude of the sound in the phones is proportional to the signal power delivered to the phones. What impedance should the headphones have for the loudest sound? If all we had to consider was voltage gain, we would, in accordance with our discussion of voltage amplifiers, make the headphone impedance as high as practical. But this simple rule doesn't work here because we must consider both signal voltage and signal current.

An equivalent circuit for studying power gain for a triode tube is shown in Fig. 11(a). Let us find the value of R_L that will deliver the greatest signal power to R_L. Increasing the value of R_L will increase E_2. But the power doesn't necessarily increase, because I_p goes down when R_L goes up, and power is the product of E_2 and I_p. In Fig. 11(b) we have calculated the power for various values of R_L and plotted the results in the form of a graph. We have assumed that the input signal is constant at 2 V and that $\mu = 50$. The graph shows that the greatest signal power output occurs when R_L is equal to r_p, the impedance of the signal source.

We always get the most power output from a power source when the load impedance equals the voltage source impedance. Thus for the loudest sound in the phones of Fig. 10 the impedance of the phones should be equal to the plate impedance of the tube. However, obtaining maximum output by matching load to tube impedance results in considerable distortion. In the interest of reducing distortion, it is usual to make the load impedance equal to twice the plate resistance when a triode tube is used. This arrangement will generally give for a triode, the highest power output

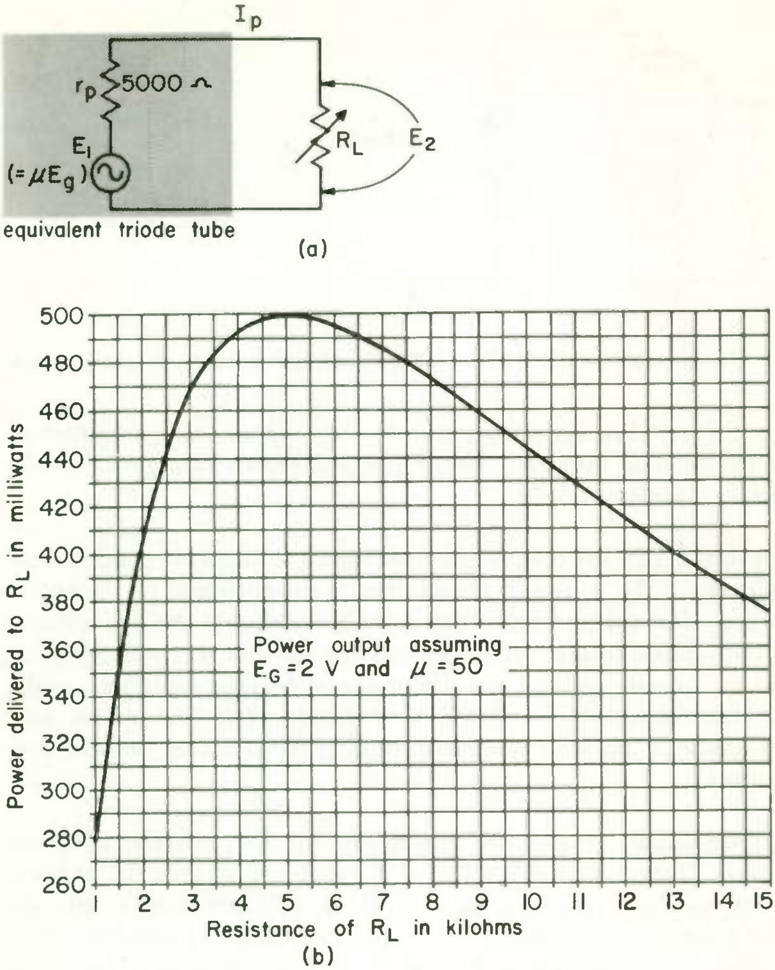

Fig. 11 **How power gain varies with the value of the load resistance.**

possible without the distortion exceeding the allowable amount. Minimum distortion with good power output is obtained from a pentode or beam power tube when the load impedance is between one-fifth and one-tenth of the plate resistance.

WHAT HAVE YOU LEARNED?

1. Because the device fed by the final amplifier usually requires some (a) *(current)(voltage)(power)*, the final amplifier must nearly always provide some (b) ____________ amplification.

2. In a triode tube stage, the maximum power will be delivered to the plate load impedance when the value of that impedance *(nearly equals)(equals)(equals twice)* the value of plate resistance r_p.

3. Refer to Fig. 10. To deliver the maximum amount of power to the headphones with the mimimum allowable distortion, the impedance of the headphones should be *(equal to)(twice)(one-half)* the value of the tube plate resistance.

4. Refer to Fig. 10. If the plate resistance of the tube is 2500 Ω, what should the impedance of the headphones be to keep the minimum allowable distortion 5 per cent or less?

5. If you were using a pentode tube to drive a set of earphones and the plate resistance of the tube was 90 kΩ, a phone impedance of 25 kΩ *(would)(would not)* be a good impedance match.

6. Refer to Fig. 11(b). Calculate the power delivered to R_L when the ohmic value of R_L is 13,000 Ω. Compare your answer with the graph.

7. Use the graph of Fig. 11(b). Maximum power delivered to R_L is (a)________ milliwatts when the ohmic value of R_L is (b)________ ohms. If the value of R_L is doubled, the value of the power delivered to the load is (c)________ milliwatts and the distortion of the signal delivered to the load is (d) *(acceptable)(not acceptable)*. If R_L were 15 kΩ, the power delivered to R_L would be (e)________ milliwatts.

8. Use the graph of Fig. 11(b). The power delivered to R_L when its ohmic value is one-half the value of the tube plate resistance is (a)________ milliwatts. If R_L were 1200 Ω, the power delivered to R_L would be (b)________ milliwatts.

9. Refer to Problems 7 and 8. As the plate load impedance increases above the value of the tube plate resistance r_p, the power delivered to the plate load decreases (a) *(slowly)(rapidly)*. As the plate load impedance decreases below the value of the tube plate resistance, the power delivered to the load decreases (b) *(rapidly)(slowly)*.

ANSWERS

1. (a) Power; (b) power 2. Equals 3. Twice

4. 5000 Ω . . . The minimum allowable distortion is generally accepted to be 5% of the total output signal. This minimum distortion occurs in a triode circuit when the load impedance is twice the triode tube plate resistance.

5. Would not . . . The best range of impedances to match the plate resistance of the tube would be 9 to 18 kΩ.

6. 400 mW . . . To calculate the power delivered to R_L we must find the current flowing through R_L and the voltage across R_L. Looking at Fig. 11(a), we see that the current flowing through R_L is the signal current I_p.

$$I_p = \frac{E_1}{r_p + R_L} = \frac{\mu E_g}{5000 + 13{,}000} = \frac{50 \times 2}{18{,}000} = \frac{100}{18{,}000} = 0.005556 \text{ A}$$

E_{R_L}, the voltage across R_L, is $I_p R_L = 0.005556 \text{ A} \times 13{,}000\ \Omega = 72.22$ V. The power delivered to the resistor is $P_{R_L} = I_P E_{R_L} = 0.005556 \text{ A} \times 72.22 \text{ V} = 0.401 \text{ W} = 401$ mW. Comparing the calculated value of P_{R_L} with the value read from the graph, we see that they are the same for all practical purposes.

7. (a) 500 (b) 5000 (c) 444
(d) Acceptable . . . See answer to Problem 4. (e) 375
8. (a) 442; (b) 312 9. (a) Slowly; (b) rapidly

8

PHASE RELATIONSHIPS BETWEEN INPUT AND OUTPUT SIGNALS . . . You can understand amplifier operation a little better if we study the various waveforms associated with a class A amplifier stage, as shown in Fig. 12. The most important observation we will make is that a tube operating in the usual manner always *inverts the phase* of the voltage signal. This means that the output signal voltage to the load or to the grid of the next stage is always 180° out of phase with the incoming signal.

In the circuit of Fig. 12(a), E_g is the incoming signal. Its waveform is shown in part (b) of the figure, and it is assumed to have a peak value of 4 V. The d-c bias voltage on the grid is represented by E_c, and it is -6 V. This is shown in the left shaded area of waveform (c), since it is the voltage on the grid when there is no incoming signal E_g. After the signal E_g passes through C_1, it combines with E_c. The complete voltage on the grid is then $E_c + E_g$, shown on the right side of waveform (c). Notice that the average value of the grid voltage stays at -6 V but swings back and forth a maximum of 4 V each side of the average value in conformity with changes in E_g.

The ammeter in Fig. 12(a) shows that the average plate current value, which is called I_b, is 5 mA, and this is shown on the left side of waveform (d). When a signal is applied to the grid, the plate current varies up and down as shown to the right of (d), the average value staying 5 mA. (Hence the reading of ammeter A shouldn't change in a class A stage.) The varying, or a-c, component of the plate current is called I_p. To draw waveform (d) so that its phase is right with respect to waveforms (b) and (c), note that when E_g is at its positive peak value ($+4$ V), the grid voltage is at its least negative value (-2 V). Since the plate current is the highest when the grid is the least negative, the plate current must also be at its maximum positive value when E_g is at its peak positive value. Hence, waveform (d) must be drawn in phase with waveform (b).

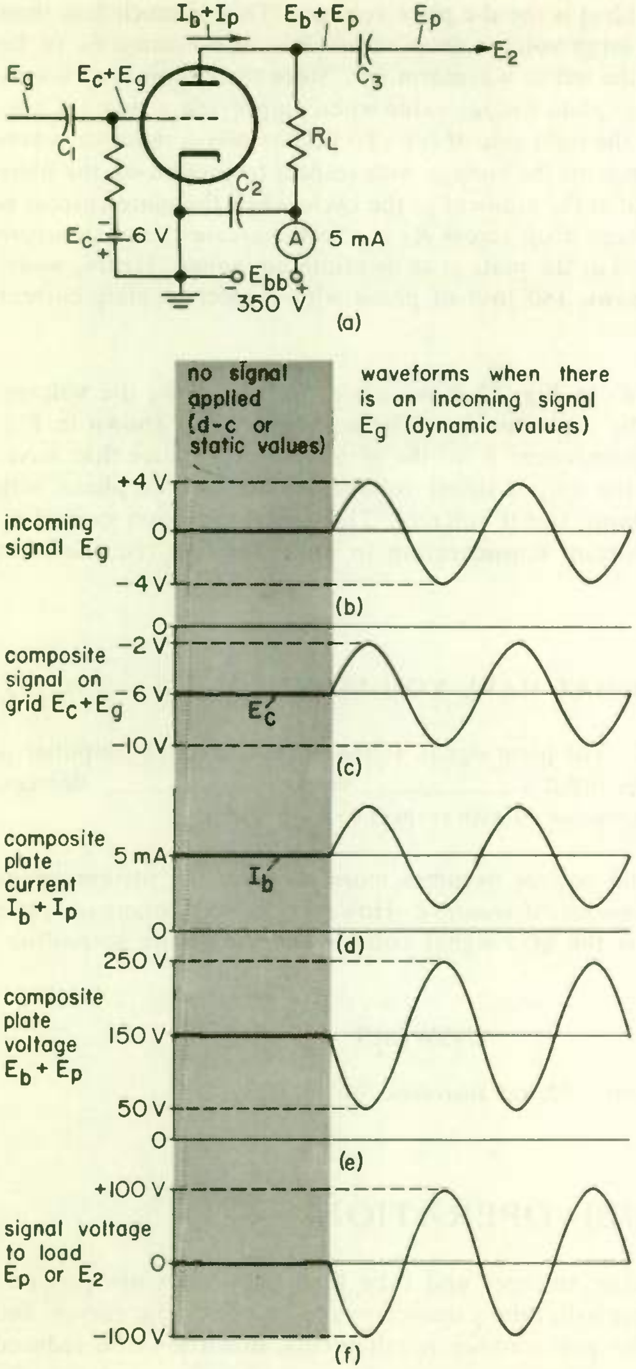

Fig. 12 Waveforms of an *RC*-coupled class A amplifier stage.

Voltage E_b in Fig. 12(a) is the d-c plate voltage. This is much less than E_{bb} because of the large voltage drop across R_L. We assume E_b to be 150 V, as shown to the left of waveform (e). Since the circuit is a class A amplifier, the average plate voltage value when amplifying a signal is also 150 V, as shown on the right side of (e). To get the phase right for waveform (e), which represents the voltage with respect to ground on the plate of the tube, note that at the moment of the cycle when the plate current is the greatest, the voltage drop across R_L is also the greatest, and therefore the voltage to ground at the plate is at its minimum value. Hence, waveform (e) must be drawn 180° out of phase with respect to plate current waveform (d).

The output signal E_2 in Fig. 12 is waveform (e) minus the d-c voltage, which is removed by capacitor C_3. The waveform E_2 is shown in Fig. 12(f). It is the a-c component E_p of the plate voltage. Notice that waveform (f), which is the output signal voltage, is 180° out of phase with waveform (b), the input signal voltage. This signal inversion caused by the tube is an important consideration in understanding the effects of feedback.

WHAT HAVE YOU LEARNED?

1. Refer to Fig. 12. The plate signal voltage of an untuned amplifier is out of phase with the input (a)__________ voltage by (b)_______ degrees, both voltages being measured with respect to a-c ground.

2. As the grid signal voltage becomes more positive, the instantaneous plate current (a)*(increases)(decreases)*. However, the instantaneous plate current decreases as the grid signal voltage becomes more (b)*(positive) (negative)*.

ANSWERS

1. (a) Signal; (b) 180 2. (a) Increases; (b) negative

PROPER TUBE OPERATION

Unless tube operating voltages and tube load impedance are properly chosen in accordance with tube parameters and characteristic curves, and to meet the amplifier performance requirements, distortion and reduced gain will result.

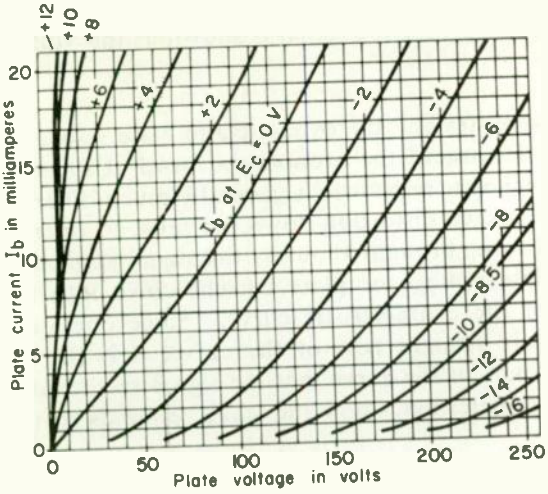

Fig. 13 **Characteristic curves for one triode tube type.**

9 STATIC AND DYNAMIC PLATE RESISTANCE . . . If the triode whose curves are shown in Fig. 13 is operating with −4 V grid bias, the curves show that, when the plate voltage is 150 V, the plate current is 8 mA.

Using Ohm's law, the plate resistance of the tube is $R = \frac{E}{I} = \frac{150}{0.008} =$ 18,750 Ω. The plate resistance value we get by calculating in this manner is called the *static*, or *d-c*, plate resistance. It will, of course, be different for different values of grid bias.

The value obtained by the static plate resistance will also vary somewhat when a different point on the curve is used for figuring the plate resistance. This is because the characteristic curves are not linear. For example, for a plate voltage of 200 V (bias staying at −4 V), the plate current is 15 mA. The plate resistance now figures to be $R = \frac{E}{I} = \frac{200}{0.015} = 13{,}330\ \Omega$, which is quite a bit different from the 18,750 Ω previously found for the static plate resistance. Hence, if we want to be precise about plate resistance, we must state the point on the graph at which it was measured.

The plate resistance values figured above are called static because the d-c values of plate voltage and plate current are used to calculate them. We are a lot more interested in the plate resistance value that the signal sees than we are in the plate resistance value that the d-c plate voltage sees. The tube resistance seen by the signal is called the *dynamic*, or *a-c*, plate resistance. It is the value represented by r_p in Fig. 1(b) and in the other equivalent circuits of this lesson where the signal is shown as the voltage source.

If the characteristic curves were straight, the dynamic and plate resistance values would be the same. Because of the pronounced bend at the bottom of the curves, the dynamic plate resistance is generally much different from the static resistance. To keep distortion down, we must so operate the tube that the plate signal swing brought about by the signal applied to the grid will not dip the plate voltage or plate current down into the heavily curved lower part of the characteristic curve. Since operation must be kept on the relatively straight part of the curve, it is the resistance associated with this part of the curve that the signal sees, and it is this dynamic resistance that determines how the stage responds to the signal.

Referring again to Fig. 13 and still assuming a bias of -4 V, suppose that in operation, the plate voltage swings between a minimum instantaneous value of 150 V and a maximum instantaneous value of 200 V. What is the resistance associated with this section of the characteristic curve for -4-V bias? The plate voltage is going from 150 to 200 V (a change of 50 V) causes the plate current to go from 8 to 15 mA (a change of 7 mA). We find the resistance of this section of the curve by dividing the change in voltage associated with this section by the change in current associated with this section.

$$r_p = \frac{\Delta E}{\Delta I} = \frac{50}{0.007} = 7140\ \Omega$$

where r_p = dynamic plate resistance

ΔE = change in plate voltage

ΔI = change in plate current caused by ΔE, grid voltage held constant

Thus under the conditions stated, the dynamic plate resistance is 7140 Ω. The dynamic plate resistance will be somewhat different for a different value of grid bias and for a different portion of the relatively straight section of the curve used for determining the dynamic resistance. To be accurate, the dynamic plate resistance must be determined for the conditions under which the tube is actually operating.

Since static plate resistance is not of much importance, *the term "plate resistance" always means dynamic plate resistance unless static plate resistance is specifically stated or implied.*

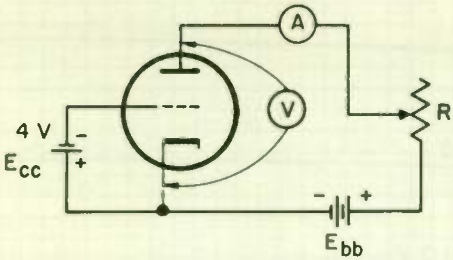

Fig. 14 Laboratory determination of plate resistance.

Figure 14 shows a lab setup for finding the dynamic plate resistance instead of using the curves of Fig. 13. Resistance *R* is varied until the voltmeter reads 150 V. Then ammeter *A* will read 8 mA, assuming the same tube type as used for the curves of Fig. 13. Next *R* is varied until the voltmeter reads 200 V, and the ammeter will then read 15 mA. Now we have the figures we need to find the plate resistance.

$$r_p = \frac{200\text{ V} - 150\text{ V}}{15\text{ mA} - 8\text{ mA}} = \frac{50\text{ V}}{0.007\text{ A}} = 7140\ \Omega$$

Notice in Fig. 14 that the grid voltage is held at a constant −4 V in finding r_p.

WHAT HAVE YOU LEARNED?

1. Refer to Fig. 13. What value of grid bias would you need to limit the plate current of the triode tube to 10 mA when the plate voltage is 165 V?

2. Refer to Fig. 13. If the triode tube plate current is to be 15 mA, what value of plate voltage is required when −3 V is applied to the grid?

3. Refer to Fig. 15. If the pentode tube is operating with 180 V on the plate and −1.75 V on the grid, what is the value of plate current?

4. Calculate the plate resistance for the pentode tube whose characteristic curves are shown in Fig. 15. Assume that the instantaneous plate voltage varies from 140 to 300 V while the grid is kept at a constant −1 V.

5. Refer to Fig. 13. The value of the triode tube r_p is relatively (a) *(low) (high)* compared with that of the pentode of Fig. 15, and the triode characteristic curves (b) *(are nearly horizontal)(slope considerably)*.

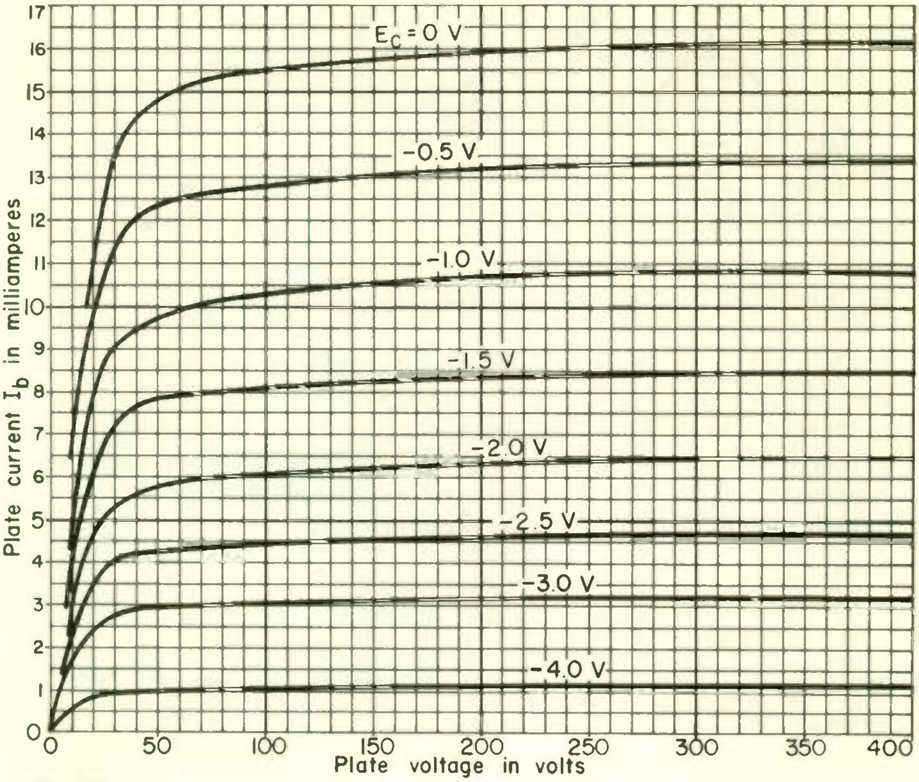

Fig. 15

6. Refer to Fig. 15. The value of the pentode tube r_p is relatively (a) *(low) (high)* compared with that of the triode of Fig. 13 because the pentode characteristic curves (b) *(are nearly horizontal)(slope considerably)*.

7. Refer to Problems 5 and 6. When the characteristic curves of a tube slope considerably, the tube r_p is relatively (a) *(low)(high)*. The characteristic curves of a pentode are (b) *(nearly vertical)(nearly flat)*, and the pentode r_p is relatively (c) ________.

ANSWERS

1. −4 . . . First run a line vertically upward from 165 V until the line intersects the horizontal line representing 10 mA. The point where the lines intersect is the value of grid bias necessary.
2. 180 V . . . Since there is no curve for a bias of −3 V, we must draw one by estimating about where it would be. It will lie about one-half the distance between the −2-V curve and the −4-V curve. Drop a line vertically downward from the intersection of the 15-mA line and the −3-V curve and read the required plate voltage on the abscissa. 3. 7.3 mA

4. 533 kΩ . . . $r_p = \frac{E}{I} = \frac{300\text{ V} - 140\text{ V}}{10.8\text{ mA} - 10.5\text{ mA}} = \frac{160\text{ V}}{0.3\text{ mA}} = 533\text{ k}\Omega$.
The large variation in E_p was necessary in order to read a variation in I_p.
5. (a) Low; (b) slope considerably 6. (a) High; (b) are nearly horizontal
7. (a) Low; (b) nearly flat; (c) high

10

FINDING μ AND g_m . . . The amplification factor μ of a tube is a measure of how much control the grid voltage has over the plate voltage. More specifically, it tells us how much the changes in instantaneous value of grid voltage caused by the incoming signal change the plate voltage. In determining this value we must keep the plate current constant so that there won't be any plate current changes to influence the result. We then change the grid voltage a small amount and note how much the plate voltage changes as a result. Dividing the change in plate voltage by the change in grid voltage gives us the amplification factor μ.

$$\mu = \frac{\Delta E_b}{\Delta E_c}$$

where ΔE_c is the change made in the grid voltage and ΔE_b is the change in plate voltage caused by ΔE_c the plate current being held constant.

To find the amplification factor for the tube represented by the curves of Fig. 13 we will assume the current to be a constant 10 mA and we will vary the grid voltage from −2 to −4 V. Reading off the chart, the plate voltage for −2 grid volts and 10-mA plate current is 125 V. The plate voltage for −4 grid volts and 10 mA plate current is 165 V.

$$\mu = \frac{\Delta E_b}{\Delta E_c} = \frac{165\text{ V} - 125\text{ V}}{4\text{ V} - 2\text{ V}} = \frac{40}{2} = 20$$

Hence, the amplification factor for the conditions of plate current and grid voltage assumed is 20. The value of μ would be somewhat different for different values of plate current and grid voltage.

Now we will consider transconductance g_m. This measures how much control the grid voltage has over the plate current. To measure this we must keep the plate voltage constant.

$$g_m = \frac{\Delta I_b}{\Delta E_c}$$

where ΔE_c is the change made in the grid voltage and ΔI_b is the change in plate current brought about by the change in grid voltage, the plate voltage being held constant.

To find the transconductance for the tube type represented in Fig. 13, let us assume the plate voltage is held constant at 150 V and that the grid voltage is changed from −2 to −4 V. The chart shows that for 150 V on the plate and −2 grid volts, the plate current is 13.5 mA. For 150 plate volts and −4 grid volts, the plate current is 8 mA.

$$g_m = \frac{\Delta I_b}{\Delta E_c} = \frac{13.5\text{ mA} - 8\text{ mA}}{4\text{ V} - 2\text{ V}} = \frac{0.0055\text{ A}}{2\text{ V}} = 0.00275\text{ mho}$$

The three tube parameters, μ, g_m, and r_p, are not independent of each other; if you know any two of them you can find the third from the formula

$$\mu = g_m r_p$$

It is easy to see how this relationship is derived:

$$\begin{array}{ccccc} g_m & \times & r_p & = & \mu \\ \downarrow & & \downarrow & & \downarrow \\ \dfrac{\cancel{\Delta I_b}}{\Delta E_c} & \times & \dfrac{\Delta E_b}{\cancel{\Delta I_b}} & = & \dfrac{\Delta E_b}{\Delta E_c} \end{array}$$

We have found g_m to be 0.00275 mho and r_p to be 7140 ohm.

$$\mu = g_m r_p = 0.00275 \times 7140 = 19.6$$

This calculated value for μ corresponds quite closely to the value of 20 previously found for μ. Since parameter values vary with the part of the characteristic chart used for determining them, you can't expect $g_m \times r_p$ to be exactly the same as the value for μ taken from the chart.

WHAT HAVE YOU LEARNED?

1. Refer to Fig. 13. Calculate μ when I_b is a constant 20 mA and the value of E_c is varied from −1 to −3 V.

2. Refer to Fig. 13. Calculate μ when I_b is a constant 5 mA and E_c is varied from −4 to −6 V.

3. Refer to Fig. 16. Readings were taken and the table shown below was made. The purpose of the table was to calculate (a) $(\mu)(g_m)(r_p)$, which has the value (b) ______________.

E_b	E_c	I_b
165 V	−4 V	10 mA
200 V	−4 V	15.1 mA

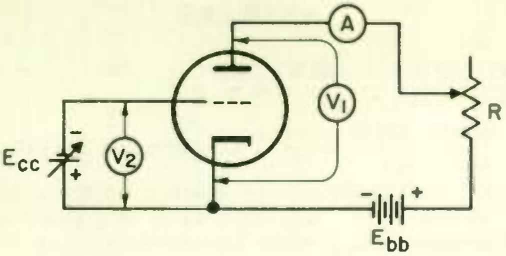

Fig. 16

4. Refer to Fig. 16. A second table was made, as shown below. The purpose of the table was to calculate (a) (μ)(g_m)(r_p), which has the value (b) ______.

E_b	E_c	I_b
150 V	−4 V	8 mA
150 V	−6 V	4.25 mA

5. Refer to Fig. 13. Calculate the value of r_p when E_c is a constant −2 V and E_b varies between 110 and 150 V. Compare your answer with the answer of Problem 3.

6. Refer to Fig. 13. Calculate the value of g_m when E_b is a constant 180 V and E_c varies between −6 and −8 V. Compare your answer with the answer of Problem 4.

7. Refer to Fig. 13. If the value of E_c is a constant −2 V and the plate voltage is varied from 90 to 190 V, the plate current will vary ______ milliamperes.

8. Refer to Fig. 15. If E_c is a constant −4 V and the plate voltage of the pentode tube is varied from 90 to 190 V, the plate current will vary ______ milliamperes.

9. A set of characteristic curves that slope considerably shows that the particular tube has a relatively (a) (*low*)(*high*) r_p, and if the characteristic curves are nearly flat, the tube r_p is relatively (b) ______.

10. Refer to Problems 7, 8, and 9. Because of the low plate resistance of a triode tube, a large plate voltage variation will cause a (a) ______ plate current variation. A pentode tube has a high plate resistance, and a large plate voltage variation will cause a (b) ______ variation in plate current.

1. 19 . . . $\mu = \frac{E_b}{E_c} = \frac{210\text{ V} - 168\text{ V}}{3\text{ V} - 1\text{ V}} = \frac{42}{2} = 21.$
2. 17 . . . $\mu = \frac{158\text{ V} - 124\text{ V}}{6\text{ V} - 4\text{ V}} = \frac{34}{2} = 17.$ Note that the value of μ, as seen by the incoming signal, is slightly different for different operating points on the characteristic curves. Thus to know the correct value of μ you must first know the point on the characteristic curve at which the tube is operating.
3. (a) r_p; (b) 6863 Ω 4. (a) g_m; (b) 1875 μmhos
5. 7273 Ω . . . Note that the value of r_p varies with the part of the characteristic curve used. The value of r_p found in Problem 3 is less than the value found in this problem.
6. 1600 μmhos . . . Compared to the value of 1875 μmhos found in Problem 4, it is apparent that the value of g_m will vary as the operating point of the tube is moved on the characteristic curves. 7. 14.8
8. 0.1 . . . The current varies from 1.1 mA at 190 V to 1 mA at 90 V.
9. (a) Low; (b) high 10. (a) Large; (b) small

11 LOAD LINES . . . The characteristic curves for the tube used in Fig. 17 are shown in Fig. 18. What is the value of the plate current I_b in Fig. 17? To read I_b from the chart, we must know the grid voltage (which we do know) and the plate voltage (which we don't know). Now, the plate voltage is equal to E_{bb} minus the voltage loss across R_L. But we must know I_b before we can find the voltage across R_L. Thus we are in the predicament of having to know I_b before we can find E_b and having to know E_b before we can find I_b! The purpose of the *load line* in Fig. 18 is to get us out of this predicament.

Whatever the value of I_b, it certainly can't be less than 0 mA. If it were 0 mA, then the drop across R_L would be zero and the plate voltage E_b would be the same as E_{bb}, which is 250 V. So on Fig. 18 we plot a point at E_b = 250 V, I_b = 0 mA. This is point *A* on the chart.

Whatever the value of the plate voltage E_b, it certainly can't be less than 0 V. If it were 0 V, then the drop across R_L would be 250 V, and I_b would

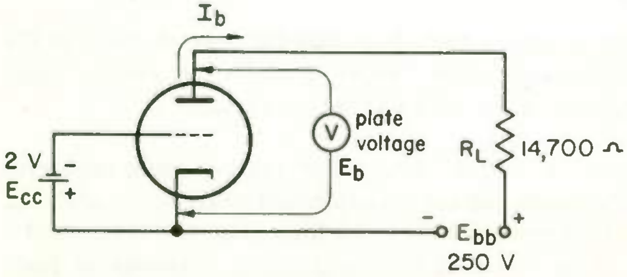

Fig. 17 Diagram for use with load line of Fig. 18.

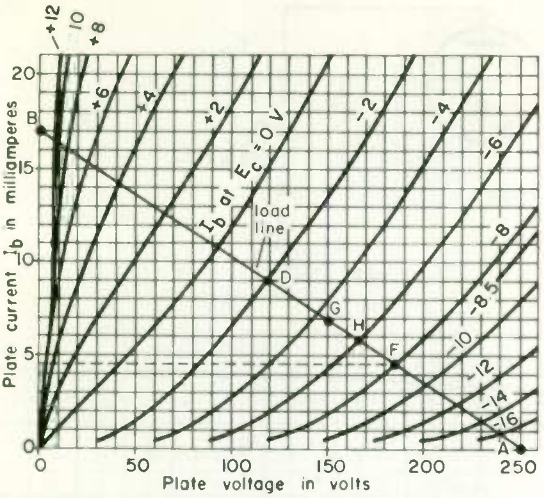

Fig. 18 **Load line for Fig. 17.**

be 250 ÷ 14,700 = 0.017 A = 17 mA. So on Fig. 18 we plot a point at $E_b = 0$, $I_b = 17$ mA. Point *B* is that plotted point. Now we draw a straight line between points *A* and *B*, and that line is the load line.

To find the plate current and plate voltage in Fig. 17 from the load line in Fig. 18, find the point on the graph where the curve for the grid bias ($E_c = -2$ V) crosses the load line. This point is marked point *D* in Fig. 18. From this point we read $I_b = 9$ mA and $E_b = 118$ V, the plate current and plate voltage values in Fig. 17.

The significance of the load line is that the three values I_b, E_b, and E_c must always intersect on the load line. Thus if any one of these three values is known, the other two values can be found.

EXAMPLE . . . To what value should we change the grid bias voltage in Fig. 17 if we want to operate the tube so that the plate current is 4.5 mA? What will the plate voltage be?

SOLUTION . . . Draw a line horizontally from $I_b = 4.5$ mA until it meets the load line at point *F*. The grid voltage curve $E_c = -8$ V crosses the load line at point *F*. Hence, the bias required is − 8 V. Reading down from point *F*, we see that 186 V is the plate voltage.

EXAMPLE . . . To what value should we change the grid bias voltage in Fig. 17 if we want the plate voltage to be 150 V? What will the plate current be?

SOLUTION . . . Moving up vertically from 150 plate volts, we cross the load line at point *G*. We estimate point *G* to be about one-fourth of the way from the curve

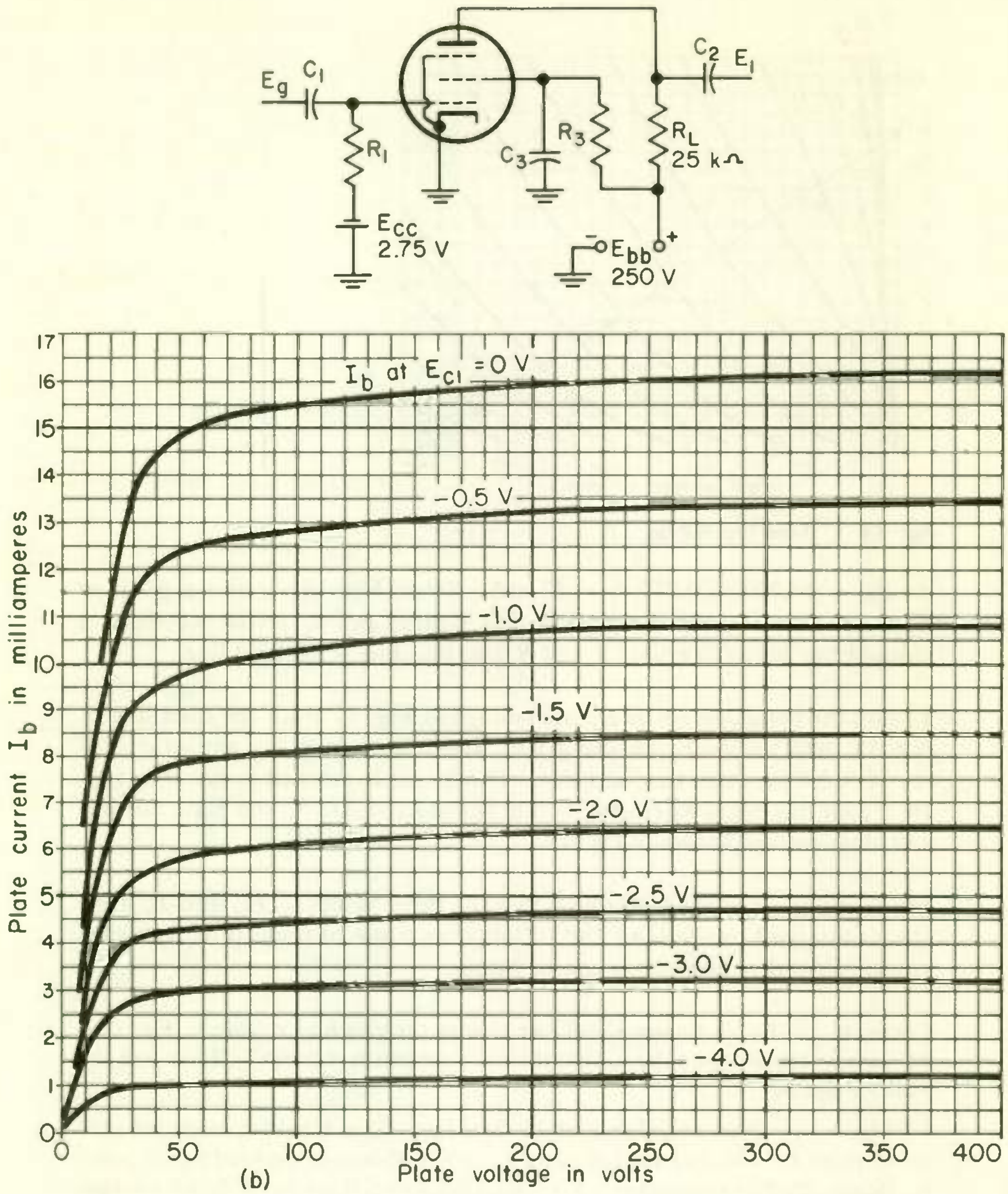

Fig. 19

$E_c = -4$ V toward the curve $E_c = -6$ V. Halfway between the two drawn curves is -5 V, and one-fourth of the way is -4.5 V, the required grid bias voltage. Point G corresponds to a plate current of 6.8 mA.

Notice that, in plotting points *A* and *B* for drawing the load line, we made use of

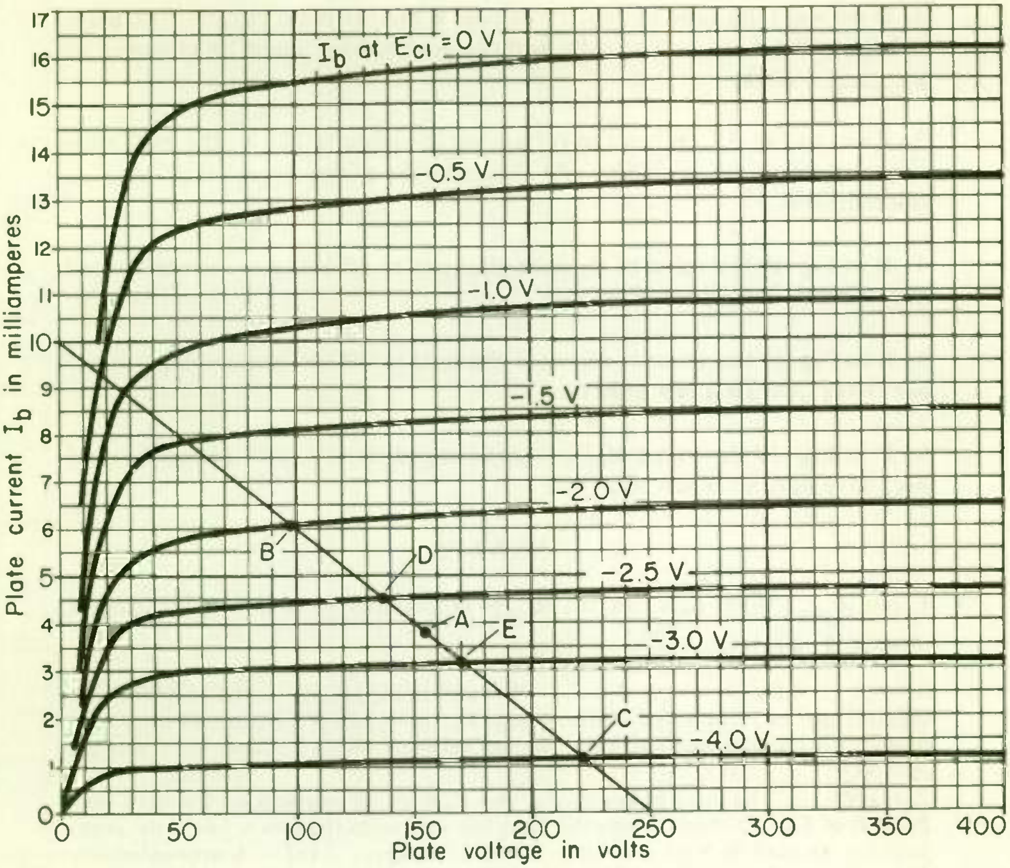

Fig. 20

R_L and E_{bb}. Hence, if either R_L or E_{bb} is changed, a new load line must be drawn for the new conditions. Since the value of E_c is not used in drawing the load line, we use the same load line for different values of E_c.

WHAT HAVE YOU LEARNED?

1. Refer to Fig. 19. To draw a load line on the graph for the circuit shown, the points you use are at zero volts and (a) ________ milliamperes and at (b) ________ volts and (c) ________ milliamperes. Draw the load line and then refer to Fig. 20 to make sure you have done it correctly. When no signal is applied to the tube, the plate current is (d) ________ milliamperes and the plate voltage is (e) ________ volts.

2. If we want the tube in Fig. 19 to pass 6 mA of plate current, the plate voltage will be (a)________ volts and the grid voltage must be changed to (b)________ volts.

3. Refer to Fig. 19. When the voltage on the plate is 221 V, the grid voltage must be (a)________ volts. At this time the plate current is (b)________ milliamperes.

4. If in Fig. 19 the value of R_L were changed to 50 kΩ, you *(would)(would not)* have to draw a new load line.

5. If in Fig. 19 the value of E_{bb} were changed to 300 V, you *(would)(would not)* have to draw a new load line.

6. If in Fig. 19 the value of E_{cc} were changed to 4 V, you *(would)(would not)* have to draw a new load line.

ANSWERS

1. (a) 10 . . . When E_b is zero, the voltage drop across R_L is 250 V. The current through R_L will be $I = \frac{250\text{ V}}{25\text{ k}\Omega} = 10\text{ mA}$.
(b) 250 (c) zero (d) 3.8 . . . The value of the voltage on the grid when no signal is applied is the value of the voltage E_{cc}, or -2.75 V. Figure 20 shows the position of point *A* one-half the distance between the -2.5 and -3.0 curves.
(e) 153 V.
2. (a) 99 . . . The three values I_b, E_b, and E_c must all intersect on the load line. Point *B* of Fig. 20 shows where the load line intersects the 6-mA line. By interpolation we read 99 V as the value of plate voltage. (b) -2, approximately
3. (a) -4 (b) 1.1 . . . See point *C*, Fig. 20.
4. Would 5. Would 6. Would not

12 USING THE LOAD LINE TO FIND OUTPUT SIGNAL AMPLITUDE . . . Figure 21(a) is the same as Fig. 17 except that provisions have been made for an input signal E_g and an output signal E_1. Let's suppose that E_g has a peak amplitude of 2 V, as shown in Fig. 21(b). The varying voltage of E_g will add to and subtract from the -2-V bias voltage E_{cc} to give a composite voltage on the grid that varies in instantaneous values from $-2\text{ V} + 2\text{ V} = 0\text{ V}$ to $-2\text{ V} - 2\text{ V} = -4\text{ V}$ on the grid. This is voltage E_c and is shown in Fig. 21(c).

Using the load line of Fig. 18, we find that when E_c is at its least negative value (0 V), I_b is 10.7 mA. Since the plate current is the greatest when the grid voltage is the least, the highest instantaneous value for the plate current is 10.7 mA. The lowest instantaneous value of plate current occurs when the grid voltage is at its most negative instantaneous value,

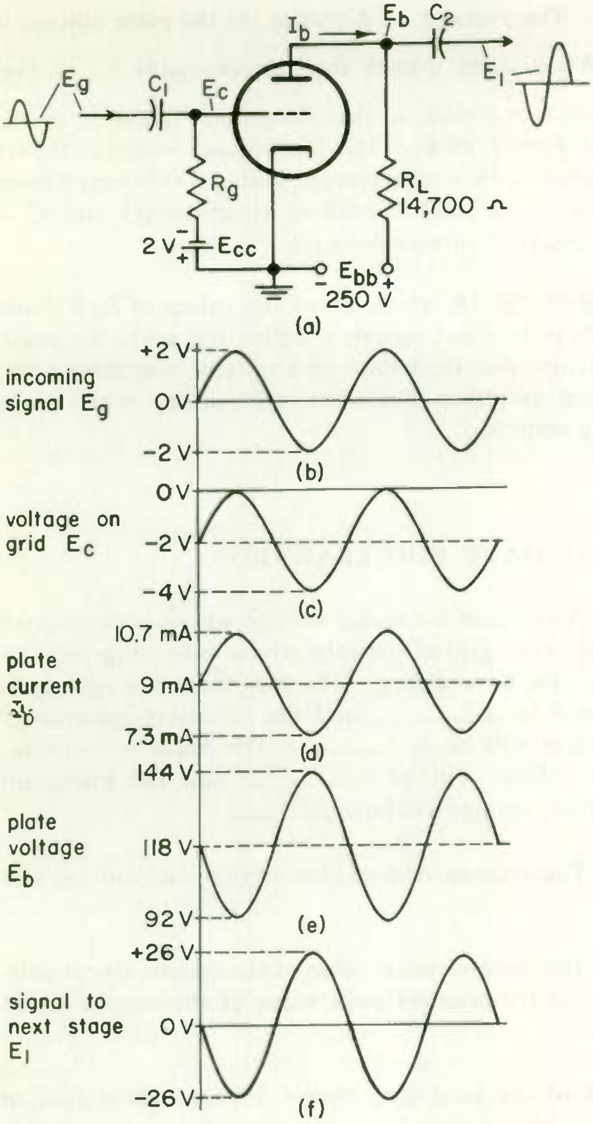

Fig. 21 Circuit waveform values for a 2-V peak input signal.

which is – 4 V. The load line shows that the plate current is then 7.3 mA. Hence, the plate current swings back and forth between 7.3 and 10.7 mA, as shown in Fig. 21(d).

By reading the plate voltage from the load line for $E_c = 0$ and $E_c = -4$ V, we find that the plate voltage swings back and forth between 92 V and

144 V, as shown in (e). The average, or d-c value, of the plate voltage is $\frac{92 + 144}{2} = 118$ V. When signal passes through capacitor C_2 in Fig. 21(a), the d-c component is removed, so that the output signal E_1 to the next stage is as shown in part (f) of Fig. 21. The voltage values in (f) are merely the values in (e) with 118 V (the average voltage) subtracted from each. $144 - 118 = +26$ V, the positive peak of waveform (f), and $92 - 118 = -26$ V, the negative peak of waveform (f).

Point *D* on the load line of Fig. 18, which shows the values of I_b, E_b, and E_c in Fig. 21 when there is no input signal, is called the *operating point*. You will see in the next topic that the choice of a suitable operating point is important in reducing amplifier distortion, particularly when large signal voltages are being amplified.

WHAT HAVE YOU LEARNED?

1. Refer to Fig. 19(b). Assume an a-c signal voltage whose peak-to-peak value is 0.5 V is applied to the grid of the tube whose operating point is *A* on the load line that you have drawn. The maximum instantaneous value of plate current will be (a)________, and the minimum instantaneous value of plate current will be (b)________. The maximum instantaneous value of plate voltage will be (c)________, and the minimum instantaneous value of plate voltage will be (d)________.

2. Refer to Problem 1. The average, or d-c value, of the plate voltage will be________volts.

3. Refer to Problem 1. The positive peak value of the output signal voltage E_1 is (a)________, and the negative peak value of the output signal voltage E_1 is (b)________.

4. The operating point of the load line shown in Fig. 20 is labeled *(A)(B)(C)*.

5. (Review) The effective value of the output signal voltage E_1 in Fig. 19 is ________.

ANSWERS

1. (a) 4.5 mA . . . Using the load line drawn previously on the graph of Fig. 19(b), we can determine the instantaneous plate current values. Since the peak-to-

peak value of the input signal voltage is 0.5 V, you know that the input signal voltage varies 0.25 V above and below the reference voltage of – 2.75 V when applied to the grid. Thus the voltage at the grid will vary between – 2.5 and – 3 V. Maximum instantaneous plate current will occur when the instantaneous grid voltage is at its most positive value, which is – 2.5 V. Using the load line, we can see that the load line and the – 2.5-V curve intersect at the 4.5-mA line, point *D*, Fig. 20.

(b) 3.1 mA, point *E*, Fig. 20; (c) 170 V; (d) 136 V

2. 153 . . . $\frac{170\text{ V} + 136\text{ V}}{2}$ = 153 V. Note that this is the same value as the d-c plate voltage when no signal is applied to the tube.

3. (a) 17 V . . . 170 V – 153 V = 17 V (b) – 17 V . . . 136 V – 153 V = – 17 V

4. *A* . . . The operating point is the point on the load line where the tube operates when no signal is applied. You determined this in Problem 1 of the WHAT HAVE YOU LEARNED? section following Topic 11.

5. 12.02 V . . . 17 × 0.707 = 12.019 = 12.02 V.

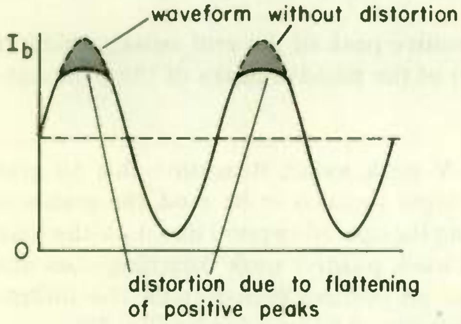

Fig. 22 **Amplitude distortion due to rounding off of positive peaks of plate current waveform.**

13 IMPORTANCE OF SUITABLE OPERATING POINT

. . . A single-ended (that is, not push-pull) audio amplifier handling a strong input signal (a large grid swing) must have its operating point carefully chosen so that distortion is not caused by the rounding off of either the positive peaks of the current waveform (as in Fig. 22) or the negative peaks (as in Fig. 23). Any distortion of the plate current waveform causes a corresponding distortion of the signal voltage waveform.

One cause of flattening of the positive peak is allowing the grid to swing positive and thus draw grid current. Single-ended audio amplifiers are not normally designed to draw grid current. If through improper operation grid current does flow, the preceding stage must furnish this current and the corresponding grid power. Since the preceding stage was not designed to do so, the input to the grid is loaded down by the extra power and current requirements on the positive peaks of the grid signal. The result

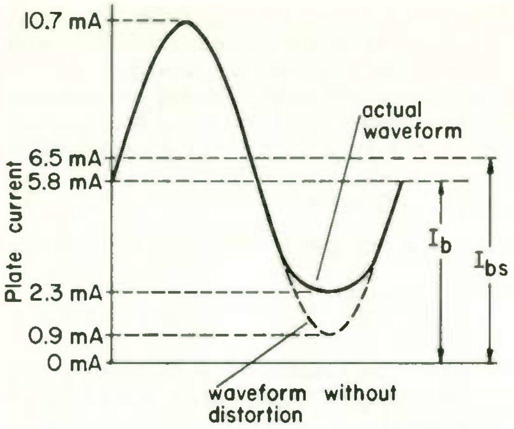

Fig. 23 **Amplitude distortion due to flattening of negative peaks.**

is a flattening or limiting of the positive peak of the grid signal, which in turn causes the limiting (flattening) of the positive peaks of the plate current, as shown in Fig. 22.

If signal E_g in Fig. 21 exceeds 2 V peak value, distortion due to grid current flow will occur. If a larger input signal is to be used, the grid bias must be made more negative, shifting the operating point down on the load line of Fig. 18. If a triode tube is used, positive peak flattening does not occur as long as the grid does not go positive even though the instantaneous value of the grid voltage swings to 0 V, as it does in Fig. 21(c).

We have seen that the operating point must be so chosen that the grid is sufficiently negative to prevent flattening on positive signal peaks. However, the grid bias must not be set too far negative or the negative peaks of the grid signal will drive the tube into plate current cutoff (bottoming). Plate current cutoff occurs when the grid is so negative that no plate current can flow. Figure 24 shows that for the load line of Fig. 25, distortion will occur if we let the grid swing more negative then – 3.5 V. While this is not enough negative grid voltage to fully cut off the tube, the plate current starts to flatten out (bottom), as always happens when cutoff is being approached, if the grid goes further negative. Bottoming is shown in Fig. 26.

Examination of Fig. 24 shows that a bias of about – 2.75 V would make a good operating point for the load line of Fig. 25. Then the grid can swing 1.75 V in each direction without causing distortion.

If a pentode tube is used, positive peak flattening occurs before the grid

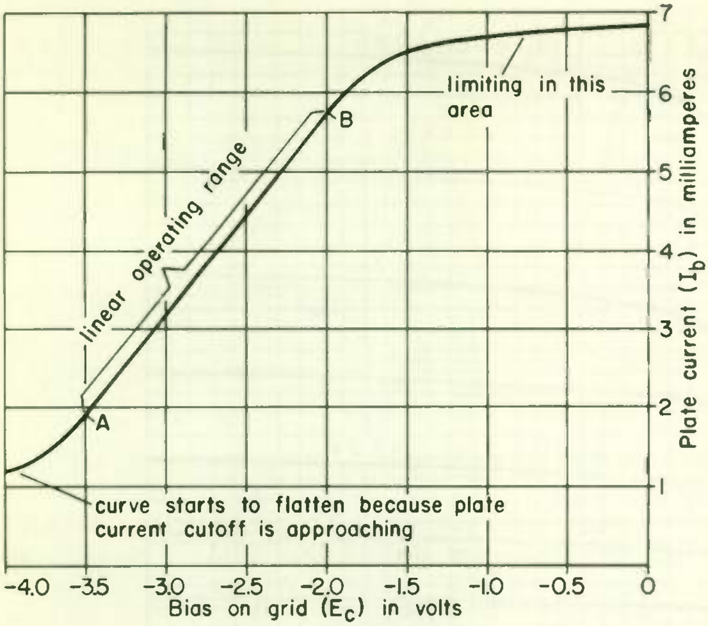

Fig. 24 An E_cI_b transfer curve drawn from the load line in Fig. 25 to show plate current limiting due to saturation.

swings so far as to draw grid current. Although the grid can, without much distortion, be swung to 0 V when a triode is used, such a swing with a pentode seriously distorts the signal output. To see why, let's draw a graph from the load line in Fig. 25 showing how plate current varies with grid voltage. This has been done in Fig. 24. From Fig. 25 we note that the curve for -1.5 V on the grid crosses the load line at $I_b = 6.5$ mA. Hence, in Fig. 24 we plot one point for our curve at $E_c = -1.5$ V, $I_b = 6.5$ mA. Similarly, we plot other points for other grid voltage curves in Fig. 25, and then we draw the smooth curve shown in Fig. 24 through the plotted points.

Notice that the curve of Fig. 24 is linear between points *A* and *B*. Hence, as long as we keep our grid swing between -3.5 and -2.0 V, negligible distortion occurs. If we let the grid swing considerably less negative than -2.0 V on positive grid signal peaks, we swing into the flat area at the top of the curve, getting severe distortion.

In the limiting area in Fig. 24 plate current increases very little as the bias become less negative. The reason is that the plate voltage is much lower than the screen voltage for grid voltage values in this area. The result is the formation of a heavy space charge (called a virtual cathode) between

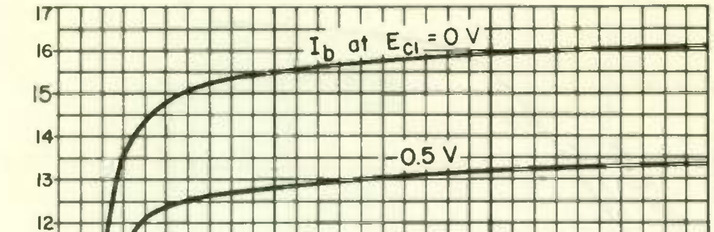

Fig. 25 **Pentode tube with load line.**

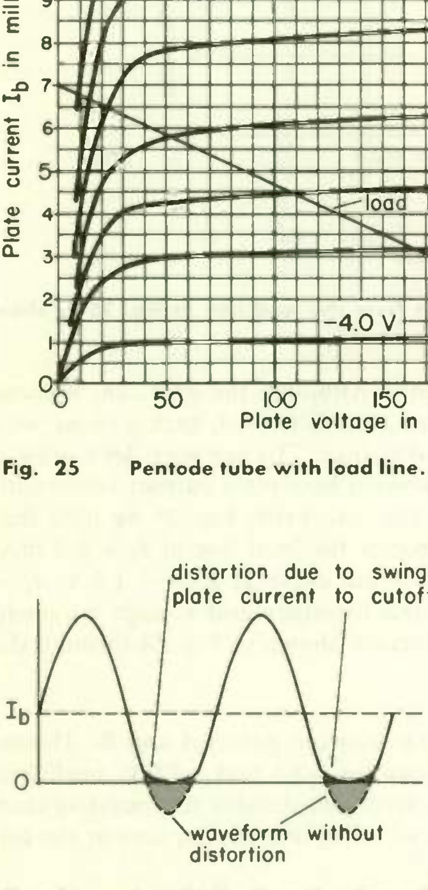

Fig. 26 **Amplitude distortion due to bottoming.**

suppressor grid and screen grid. The negative charge of this cloud of electrons repels electrons coming from the cathode and thus makes the tube current insensitive to any further decrease in grid potential.

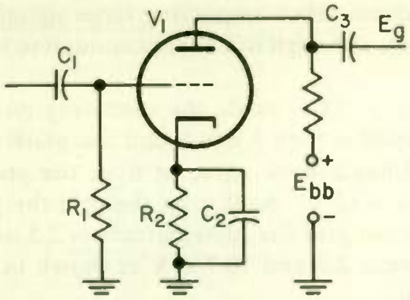

Fig. 27

WHAT HAVE YOU LEARNED?

1. Refer to Fig. 27. An amplifier, of which the stage shown is a part, is not working correctly. The complaint is that the signal at the speaker is distorted. You have traced the trouble to the stage shown and, by using an oscilloscope, you have found that the signal E_g is flattened at the peaks of the positive-going half-cycles. A cause of this condition could be that resistor R_2 __________________ in value.

2. Refer to Problem 1. If the signal voltage E_g had shown the condition of bottoming, a cause of the condition could be that resistor R_2 __________________ in value.

3. You are again working on the amplifier of Problem 1 and have traced the trouble to the same stage. Once again the output signal E_g shows on the scope that it is limiting. You check the components and all check good. What could be the cause of the trouble?

ANSWERS

1. Decreased . . . Resistor R_2 is used to supply cathode bias for the stage. If the value of R_2 should decrease, the voltage drop across R_2 would decrease. A decrease of the voltage across R_2 would decrease the bias of the tube. A decrease in bias would move the operating point of the tube on its load line. If the operating point were moved so that the incoming signal voltage to the stage could draw grid current, limiting (flattening) would occur.
2. Increased . . . An increase in the value of R_2 would increase the bias of the stage and move the operating point of the tube farther down on the load line. If the operating point is such that the incoming signal causes operation in the lower knee of the characteristic curves, bottoming will occur.
3. A faulty tube.

14 AMPLITUDE DISTORTION WITH LARGE SIGNAL SWING . . .

Even though the operating point is so chosen as to avoid current limiting and bottoming, vacuum tubes amplifying large signals always distort the signal to some extent, although not always enough to be objectionable.

Suppose that H in Fig. 18 is made the operating point. With no input signal, the plate current is then 5.8 mA and the plate voltage is 166 V. If an incoming signal has a peak value of 6 V, the grid swings back and forth between 0 and − 12 V. At 0 V on the grid the plate current is 10.7 mA. At − 12 V on the grid the plate current is 2.3 mA. Thus the plate current swings between 2.3 and 10.7 mA as shown in Fig. 23, which also shows the distortion.

In a class A amplifier free of distortion, the average plate current (the value read on a d-c ammeter in series with the plate supply voltage) will be the same when there is a signal being amplified as when there is no signal. Because of the rounding off of the bottom of the signal waveform shown in Fig. 23 the distortion has caused the average value of plate current to rise. I_b is the plate current without a signal, and I_{bs} is the average plate current with the incoming signal shown.

Distortion due to nonlinearity of the characteristic curves (the type illustrated in Fig. 23) can be kept down by so choosing the power supply voltage E_{bb} and the load resistance R_L as to give a load line over which distortion is at a minimum and by limiting the grid signal swing to a value less than the maximum capability of the tube. The choice of operating point is just as important as the choice of a load line in keeping distortion to a minimum.

From the equipment maintenance point of view, the lesson to be learned from this discussion of distortion is that changes in component and voltage values due to aging or failure can change the load line or operating point and thus introduce additional distortion. Changes in tube characteristics will change the characteristic curves and therefore also cause distortion.

WHAT HAVE YOU LEARNED?

1. Assume a class A amplifier operating without distortion. The average plate current I_{bs} will be (a) *(less than)(equal to)(greater than)* the no-signal d-c plate current I_b. The average plate voltage E_{bs} will be (b) *(less than) (equal to)(greater than)* the no-signal d-c plate voltage E_b.

2. Assume a class A amplifier operating with distortion. If the peak value

of the positive half-cycle of the plate signal current has a greater value than the negative half-cycle, the value of I_{bs} will be *(greater than)(less than)* the value of I_b.

3. Refer to Problem 2. If the negative half-cycles have a greater peak value than the positive half-cycles, the value of I_{bs} will be (a) *(greater than) (less than)* the value of the d-c plate current I_b. The wavform of the output signal voltage will show the (b) *(positive)(negative)* half-cycle with the greatest amplitude.

4. Refer to Fig. 23. The negative half-cycle of the waveform shown has a (a) *(greater)(smaller)* peak value than the positive half-cycle. Instead of saying peak value, you can say peak (b) *(amplitude)(curve)(rise)*. Thus, when the value of the average plate voltage, or plate current, does not equal the value of the no-signal d-c plate voltage, or current, the output signal voltage, or current, is said to contain (c) ____________ distortion.

5. Refer to Fig. 18. If point *H* is the operating point, what is the value of the grid bias used on the tube? To what peak value would you limit the input signal?

6. Refer to Fig. 18. If the tube were biased at – 2 V and the input signal to the tube had a peak value of 2 V, would the output waveform be distorted?

7. Refer to Fig. 20. Assume the pentode tube is biased at – 2 V and the input signal applied to the pentode has a peak value of 2 V, will the output waveform be distorted?

8. Refer to Fig. 20. If *D* were the operating point of the pentode, to what value would you limit the peak value of the pentode input signal to avoid distortion?

ANSWERS

1. (a) Equal to (b) Equal to . . . See Fig. 20. As you have learned previously in this lesson, the tube operating between points *D* and *E*, with *A* as the operating point, produces equal-current positive and negative swings, so that the average value of plate current with signal applied is the same as the no-signal d-c value of plate current. The same is true for the plate voltage.
2. (a) Greater than
3. (a) Less than; (b) positive 4. (a) Smaller; (b) amplitude; (c) amplitude
5. (a) – 6 V (b) 1 V . . . A 1-V peak input signal to the triode with point *H* as the operating point would produce a current swing of 0.7 mA above and below the d-c no-signal value of plate current, 5.8 mA. An input signal with a peak

value greater than 1 V would not produce equal current swings, as can be seen if you assume an input of 2 V peak. A 2-V peak input signal would produce a positive signal current swing of 1.5 mA and a negative swing of 1.2 mA, a difference of 20 per cent. Thus it can be seen that a small signal can produce a nearly distortionless output and a large input signal can produce a distorted output. The position of the operating point will determine the peak value of input signal which will not produce an excessive amount of distortion in the output signal.

6. Yes . . . The output would be distorted because the negative plate signal current swing would be 1.8 mA and the positive swing would be 1.7 mA.

7. Yes . . . As can be seen by inspection, when the sum of the bias voltage and the signal voltage causes the grid voltage to be zero, the instantaneous plate current will be less than 9.5 mA, while the instantaneous minimum current will be 1.1 mA. The negative plate signal current swing is far larger than the positive swing, and thus the value of I_{bs} is considerably below the value of I_b and a large percentage of amplitude distortion will occur. Note that as the signal voltage applied to the grid of the pentode approaches zero volts, the load line passes through the curved (knee) portion of the characteristic curve. Because the load line passes through the nonlinear portions of the curves, amplitude distortion occurs.

8. 0.5 V peak . . . An input signal of this amplitude would cause equal positive and negative plate signal current swings. If 1-V peak were applied to the pentode, the positive plate signal current swing would be 0.3 mA greater than the negative swing.

15 USING TUBE MANUALS . . . Manufacturers publish technical data on their tubes, and some publish tube manuals that conveniently collect together, in one binding the necessary technical information on a great many tubes. Tube manuals have information of value to all technicians. A page from such a tube manual, covering the 6L6 tube, is shown on the facing page.

The pin connection diagram is shown in the upper left-hand corner. Pins are numbered clockwise looking at the bottom of the tube socket and starting at the tube alignment slot in the socket. The data start with a general description of the tube and the uses for which it was designed. (However, you will often find tube types used for widely different purposes than the uses suggested in the manual.) The first number in the tube type (the 6 in 6L6) indicates the approximate filament voltage used, but you should refer to the data to get the exact filament voltage, which is 6.3 V for the 6L6. The letters and suffix numbers in the tube type have only limited meaning any more, but, in general, rectifier tubes use the later letters of the alphabet. Thus the 35Z5GT is a rectifier tube requiring 35 V for heating its filament. The GT at the end means that the tube envelope is a glass tube. The 6L6 is a metal tube and the 6L6GC is the equivalent glass tube.

The maximum ratings of a tube are important. Under maximum ratings

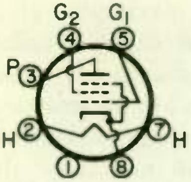

BEAM POWER TUBE

6L6
6L6GC

Metal type 6L6 and glass octal type 6L6GC are used in the output stage of audio amplifying equipment, especially units designed to have ample reserve of power-delivering ability. These types provide high power output, sensitivity, and high efficiency. Power output at all levels has low third- and higher-order harmonics. Type 6L6, Outline 4, type 6L6GC, Outline 19D; **Outlines** section. Tubes require an octal socket and may be mounted in any position. It is especially important that these tubes, like other power-handling tubes, be adequately ventilated. Type 6L6GC can be used in place of type 6L6 and may be supplied with pin 1 omitted.

Heater Voltage (ac/dc)		6.3	volts
Heater Current		0.9	ampere
Peak Heater-Cathode Voltage:			
Heater negative with respect to cathode	180 max	200 max	volts
Heater positive with respect to cathode	180 max	200 max	volts
Direct Interelectrode Capacitances (Approx.):	6L6*	6L6GC	
Grid No. 1 to Plate	0.4	0.6	pF
Grid No. 1 to Cathode, Heater, Grid No. 2, and Grid No. 3	10	10	pF
Plate to Cathode, Heater, Grid No. 2, and Grid No. 3	12	6.5	pF

*With pin 1 connected to pin 8.

Class A_1 Amplifier

MAXIMUM RATINGS:	Design-Center Values	Design-Maximum Values	
Plate Voltage	360 max	500 max	volts
Grid-No. 2 (Screen-Grid) Voltage	270 max	450▲ max	volts
Plate Dissipation	19 max	30 max	watts
Grid-No. 2 Input	2.5 max	5 max	watts

TYPICAL OPERATION:				
Plate Voltage	250	300	350	volts
Grid-No. 2 Voltage	250	200	250	volts
Grid-No. 1 (Control-Grid) Voltage	−14	−12.5	−18	volts
Peak AF Grid-No. 1 Voltage	14	12.5	18	volts
Zero-Signal Plate Current	72	48	54	mA
Maximum-Signal Plate Current	79	55	66	mA
Zero-Signal Grid-No. 2 Current	5	2.5	2.5	mA
Maximum-Signal Grid-No. 2 Current	7.3	4.7	7	mA
Plate Resistance (Approx.)	22500	35000	33000	ohms
Transconductance	6000	5300	5200	μmhos
Load Resistance	2500	4500	4200	ohms
Total Harmonic Distortion	10	11	15	per cent
Maximum-Signal Power Output	6.5	6.5	10.8	watts

▲In push-pull circuits where grid No. 2 of each tube is connected to a tap on the plate winding of the output transformer, this maximum rating is 500 volts.

Push-Pull Class AB_1 Amplifier

MAXIMUM RATINGS:
(Same as for Class A_1 Amplifier)

TYPICAL OPERATION (Values are for two tubes):	6L6	6L6	6L6GC	
Plate Voltage	360	360	450	volts
Grid-No. 2 Voltage	270	270	400	volts
Grid-No. 1 Voltage	−22.5	−22.5	−37	volts
Peak AF Grid-No. 1-to-Grid-No. 1 Voltage	45	45	70	volts
Zero-Signal Plate Current	88	88	116	mA
Maximum-Signal Plate Current	132	140	210	mA
Zero-Signal Grid-No. 2 Current	5	5	5.6	mA
Maximum-Signal Grid-No. 2 Current	15	11	22	mA
Effective Load Resistance (Plate-to-plate)	6600	3800	5600	ohms

for use as a class A_1 amplifier, notice that two sets of maximum values are given; one set is called design-center values and the other is called design-maximum values. The design-maximum values should not under any circumstances be exceeded. The design-center values are the practical limits used in design. They are enough lower than the design-maximum values that variations due to operating conditions will not cause the design-maximum values to be exceeded. Thus the highest practical plate voltage to use with the 6L6 is 360 V and the highest screen voltage that it is practical to use is 270 V.

Exceeding the maximum plate dissipation which is 19 W design-center value for the 6L6, will cause the tube to overheat and will shorten its life. Similarly, the wattage input to the screen grid (grid 2) must be limited to 2.5 W. The maximum-signal output power shown on the chart is not a tube rating for safe operation, but represents the maximum signal power output to the load that can be expected under the operating conditions given and without the harmonic distortion exceeding the values listed.

You should study the sample tube data chart to note the information available. Manual data not already commented on should be self-explanatory.

WHAT HAVE YOU LEARNED?

1. If you had a type 12AT7 vacuum tube, you would know at once that the filament voltage needed for the tube was approximately ______ volts.

2. Refer to page 47. If the tube is to be used as a class A amplifier with a plate voltage of 300 V, what is the approximate value of the tube plate resistance? (a) ______. The tube transconductance is (b) ______ micromhos.

3. Refer to Problem 2. The tube manual does not list the μ of the tube, but you calculate μ to be (a) ______. The amplification factor is not listed because the 6L6 is a (b) *(pentode)(tetrode)(triode)* tube, so that the important tube constant is the (c) *(r_p)(g_m)* rather than the amplification factor.

4. Refer to Problem 2. The maximum peak-to-peak value of input signal you could use with this tube would be ______ volts.

ANSWERS

1. 12 . . . The actual required filament voltage would be 12.6 V.
2. (a) 35,000 Ω; (b) 5300 3. (a) 185.5; (b) pentode; (c) g_m
4. 25 . . . The peak value of the audio frequency applied to the grid is listed as 12.5-V peak. Thus the peak-to-peak value is 12.5 × 2 = 25 V.

NEGATIVE FEEDBACK AMPLIFIERS

An amplifier so designed that part of its output signal is fed back to the input out of phase with the input signal is called a *negative* or *inverse, feedback amplifier*. Because the incoming signal is opposed by the out-of-phase feedback signal, the voltage gain of the amplifier is greatly reduced, an obvious disadvantage. As for benefits, negative feedback substantially reduces amplitude distortion, stabilizes the amplifier gain, and improves the amplifier frequency response. Because the resulting distortion is largely eliminated, power amplifiers using negative feedback can be driven harder for a higher power output. Negative feedback also reduces hum, so that less power supply filtering is required. In audio power amplifiers, negative feedback makes it possible to obtain *better* performance at *lower* cost.

16 ACTION WITH POSITIVE FEEDBACK . . . So that you can better understand negative feedback, we will first discuss positive feedback.

Figure 28(a) shows an ordinary amplifier with transformer coupling to its output. The output signal E is shown as in phase with the input signal e_1. By merely reversing the primary leads, the output could be made to be out of phase with the input. Phasor diagrams for e_1 and E are shown to the right of the figure.

In Fig. 28(b) a small part e_f of the output signal is fed back to the input in such a manner as to be in series with the grid input signal e_2. The total signal applied to the grid is thus $e_2 + e_f$, and it is this sum that is amplified by the stage. If the output signal E is to stay the same amplitude as it is in (a), the input signal must be much reduced in value, reduced enough that $e_2 + e_f$ is equal in amplitude to the input signal of (a). Then the signal actually applied to the amplifier input, which is e_1, is the same in both part (a) and part (b) of Fig. 28, and consequently the output signal E is the same in both cases.

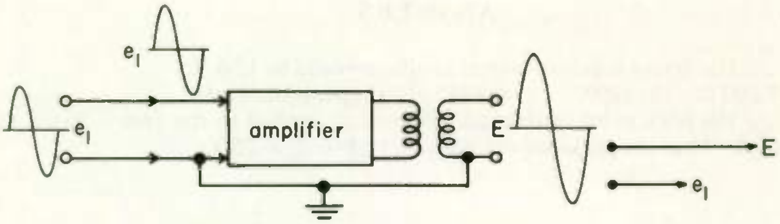

(a) e_1 and E in phase, no feedback

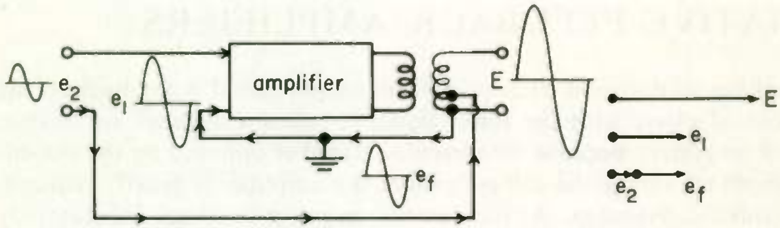

(b) Positive feedback

Fig. 28 Amplifier with positive feedback.

Feedback in which the signal fed back reinforces the input signal, as in Fig. 28(b), is called *positive* or *regenerative* feedback. Notice in Fig. 28 how a much smaller input signal e_2 with feedback produces the same output signal as does the larger e_1 in (a), where there is no feedback. This shows that positive feedback greatly increases the amplifier gain.

If the amplitude of the signal e_f fed back in Fig. 28(b) is increased until it is equal to the amplitude of e_1, then the output signal E is maintained without any input signal e_2. The amplifier then becomes an oscillator. Because of the high gain of most modern amplifiers, the amount of positive feedback required for the amplifier to lapse into oscillations (and therefore become useless as an amplifier) is quite small. Positive feedback is seldom used intentionally in modern audio amplifiers. Postive feedback increases amplitude and frequency distortion; operation is more erratic and unstable; and there is always the danger of oscillations. It is easy with modern tubes and transistors to get all the gain you want without the need of positive feedback.

Although positive feedback is not wanted, it cannot be avoided completely, since there is always some stray coupling between output and input circuits, often through the power supply. The problem is to keep it as low as possible, and in any case below the level at which oscillations occur.

WHAT HAVE YOU LEARNED?

1. (Review) An oscillator is an amplifier that supplies its own ________ signal voltage.

2. Refer to Fig. 28(b). The amplifier shown supplies (a) *(all)(a part)* of its input signal voltage. The amplifier accomplishes this through the use of (b) ____________ feedback.

3. Refer to Fig. 28(b). The input signal e_2 from the preceding stage is in (a) *(series)(parallel)* with e_f, the portion of the output signal fed back to the amplifier input terminals. The voltage e_2 (b) *(is)(is not)* in phase with e_f.

4. Refer to Problem 3. Since e_2 and e_f are in series and in phase, the input to the amplifier e_1 is equal to the (a) *(sum of)(difference between)* the two waveforms (b) ________ and ________.

5. If the amplifier shown in Fig. 28(b) is suddenly overdriven (e_2 becomes large), the amplifier could go into ____________.

ANSWERS

1. Input 2. (a) A part; (b) positive
3. (a) Series . . . As shown in Fig. 28(b), e_2 must travel to the tap on the secondary of the output transformer and then in the same path as e_f. Hence the two are in series. (b) Is . . . This fact is determined by use of the phasor diagram, which shows e_2 and e_f in phase. 4. (a) Sum of; (b) e_2, e_f
5. Oscillation . . . If e_2 became so large that e_f equaled e_1, an input signal would no longer be necessary, because the amplifier would then function as an oscillator.

17 ACTION OF NEGATIVE FEEDBACK . . . Figure 29(a) is the same as Fig. 28(a) except that in Fig. 29(a) the output signal E is out of phase with the input signal e_1. In Fig. 29(b) part of the output signal e_f is fed back in series with the input signal e_2. Since e_2 is out of phase with e_f, the signal e_1 applied to the amplifier input is equal to $e_2 - e_f$, or, to state it another way, $e_2 = e_1 + e_f$. If the output E is to be the same amplitude in (b) as it is in (a), then e_1 must have the same amplitude in both parts of the figure. Thus for the same output, e_2 in (b) must be greater than e_1 in (a) by the amount of e_f. Since the signal input for the same output must be greater with negative feedback, the voltage gain with negative feedback is less than without feedback.

The greater the fraction of the output signal fed back, the less will be the gain in an inverse feedback amplifier. The incoming signal e_2 must always

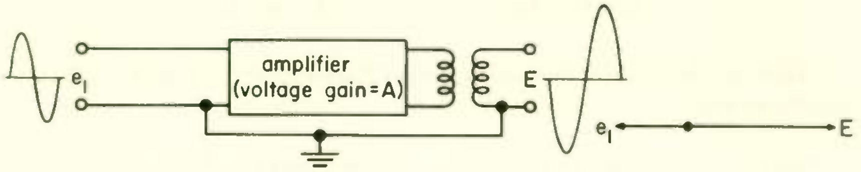

(a) e_1 and E out of phase, no feedback

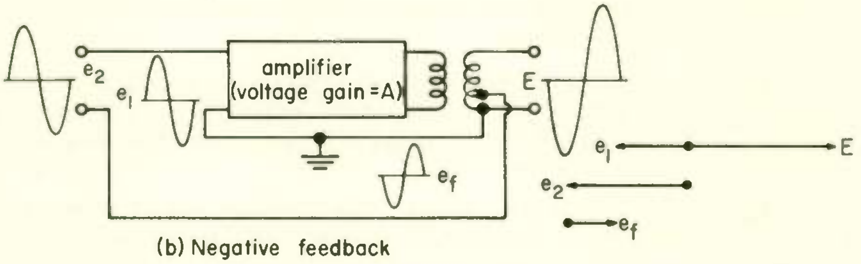

(b) Negative feedback

Fig. 29 **Amplifier with negative feedback.**

be enough stronger than the feedback signal to overcome the feedback signal and still have enough signal e_1 left to feed the amplifier input.

A few figures will help make the signal relationships with inverse feedback clearer. Suppose that the gain of the amplifier without feedback in Fig. 29 is 100. What must be the value of the incoming signal e_2 in Fig. 29(b) to produce an output E of 500 mV? Assume that 20 per cent of the output signal is fed back to the input; that is, $e_f = 0.20 \times 500 = 100$ mV. If E is to be 500 mV, then e_1 (which is equal to E/A) must be $500/100 = 5$ mV. The input signal e_2 must furnish not only the 5 mV for e_1 but also another 100 mV to overcome e_f. The amplitude of e_2 must thus be 105 mV. The gain of the stage is thus $500/105 = 4.76$. The use of 20 per cent negative feedback brought the stage gain down to 4.76 from a gain of 100 without feedback.

The voltage gain of a feedback amplifier is given by the formula

$$\text{voltage gain with feedback} = \frac{A}{1 - A\beta}$$

where A is the gain without feedback and β is the fraction of the output signal fed back.

In using the above formula, the feedback factor $A\beta$ is considered positive if the feedback is positive and negative if the feedback is negative. For the benefit of interested readers, the derivation of the above formula is given in Appendix I.

WHAT HAVE YOU LEARNED?

1. What has probably been done to reverse the phase of E in Fig. 29(b) as compared with E in Fig. 28(b)?

2. Refer to Fig. 29(b). The input signal e_2 from the preceding stage is in (a) *(series)(parallel)* with e_f, the part of the output signal fed back to the amplifier input terminals. The voltage e_2 is (b) *(in phase)(180° out of phase)* with e_f, the feedback voltage.

3. Refer to Problem 2. Since e_2 and e_f are in series and 180° out of phase, the input to the amplifier e_1 is equal to the (a) *(sum of)(difference between)* the two waveforms (b) ________ and ________.

4. Refer to Fig. 28(b). Assume the gain of the amplifier without feedback is 150. If 10 per cent of the output signal voltage is fed back to the amplifier input terminals, what is the gain of the stage? Use the formula, feedback with gain $= \dfrac{A}{1 - A\beta}$.

ANSWERS

1. Probably the primary leads of the output transformer have been reversed . . . The leads of the secondary could not be reversed because of the feedback tap. The position of the tap determines the value of β. If the secondary leads were reversed, β would not be the same. For example, if β were 0.1 and the leads of the secondary were reversed, it would become 0.9.
2. (a) Series; (b) 180° out of phase 3. (a) Difference between; (b) e_2, e_f
4. 9.375 . . . Feedback with gain =

$$\frac{A}{1 - A\beta} = \frac{150}{1 - (150 \times 0.1)} = \frac{150}{1 - (-15)} = \frac{150}{1 + 15} = \frac{150}{16} = 9.375.$$

Note that the value of the term $A\beta$ is negative because negative feedback is used.

18 HOW NEGATIVE FEEDBACK REDUCES DISTORTION . . . Let us understand first of all that negative feedback will reduce only distortion that has originated within the amplifier or sections of the amplifier that are part of the feedback loop. The feedback loop is the complete path that one would walk through if he started at some point in the feedback path and walked around the circuit until he came back to the point at which he started. The feedback loop consists of the feedback path and the amplifier. However, in many cases the feedback path may not bridge all of the amplifier stages. Distortion originating in any stages or circuitry not part of the feedback loop is not reduced by the negative feedback.

We will consider first the case when the amplifier generates a spurious

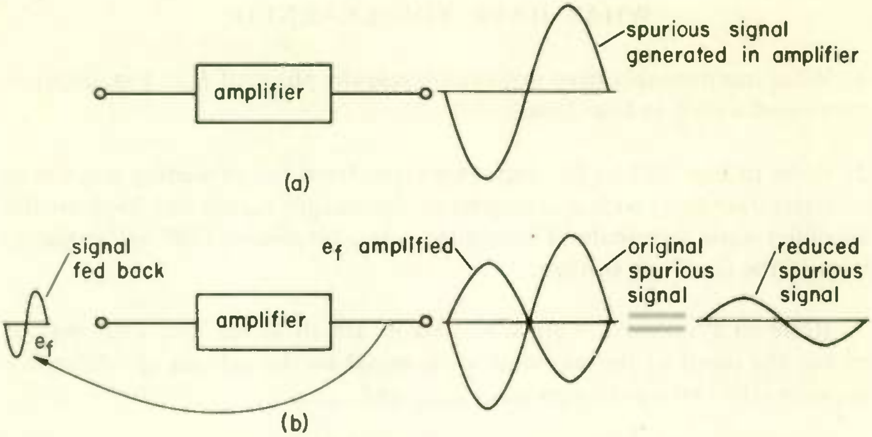

Fig. 30 **How negative feedback reduces the amplitude of spurious signals.**

output signal at a frequency at which there is no input signal. Hum picked up within the amplifier and amplified by the following stages would be an example of such a spurious signal. Another example would be harmonics of frequencies being amplified that develop within the amplifier. The situation without feedback is represented in Fig. 30(a). There is an output signal but no corresponding input signal. There may be inputs and corresponding outputs at other frequencies, but they have nothing to do with the spurious signal and so need not be considered.

If we now add negative feedback to the amplifier of Fig. 30(a), part of the spurious signal feeds back to the input, as shown by e_f in (b). The phase of e_f is inverted by the amplifier. (This must be assumed, because otherwise the feedback would be positive rather than negative.) Figure 30(b) shows that in the amplifier output the amplified value of e_f is out of phase with the original spurious signal and therefore largely cancels it out, leaving the reduced spurious signal shown.

All the spurious signal in Fig. 30 can't be canceled out, because the signal e_f fed back is a fraction of the reduced spurious signal output from the amplifier, and not a fraction of the much larger spurious signal output one would have if there were no feedback. As long as a spurious signal is generated within the feedback loop, there must be some spurious signal output. If there were not, then e_f would be zero, and if that were so, the spurious signal would not be canceled at all. The higher the value of the feedback factor β, the more the spurious signal will be reduced.

Figure 31 shows how amplitude distortion generated within the amplifier is reduced by negative feedback. Part (a) of the figure shows an input

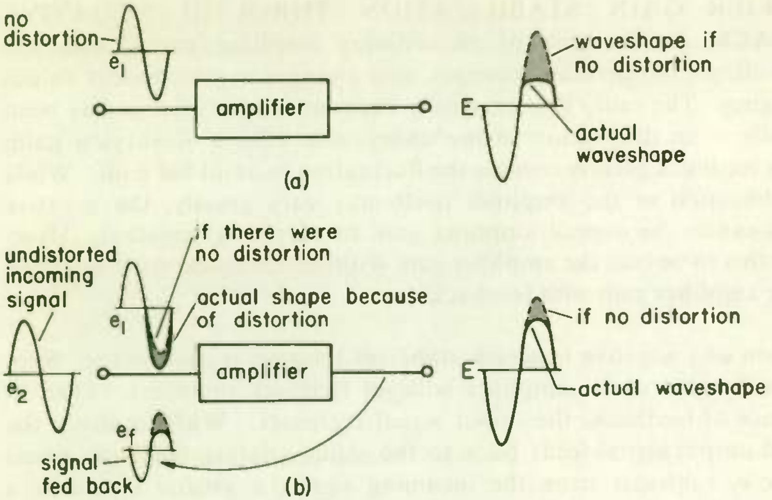

Fig. 31 How amplitude distortion is reduced by negative feedback.

signal not distorted. If the amplifier does not amplify the positive part of the wave as much as the negative part, the result without feedback will be the distorted output wave E that is shown. Figure 31(b) shows how negative feedback reduces this distortion. The signal fed back, e_f, will, of course, have the same waveshape as E, and therefore it will also be distorted as E is.

Now feedback signal e_f subtracts from incoming signal e_2 to give e_1, the signal at the amplifier input. The negative half of the e_2 cycle has less than the normal amount subtracted from it because the corresponding half of e_f is less in amplitude than it should be. The result is that the negative half of e_1 is of greater amplitude than the positive half and is greater than it would be if there were no distortion. The negative half of e_1, when amplified, becomes the positive half of the output signal E. Because the signal being amplified is greater than normal, the fault of the amplifier in not amplifying this part of the cycle so well is partly compensated for, so that the distortion of E is less than it would be if there were no feedback.

For the reason mentioned previously, negative feedback never removes all of the amplitude distortion. The greater the feedback fraction β, the more the distortion will be reduced. However, increasing β reduces the amplifier gain with feedback, so that an additional stage may be required to get the needed gain.

19 AMPLIFIER GAIN STABILIZATION THROUGH NEGATIVE FEEDBACK . . . The gain of an ordinary amplifier varies with the supply voltage, temperature changes, and changes in component values due to aging. The radio that gradually becomes louder after it has been on a while is an illustration of the undesirable effects of varying gain. Negative feedback greatly reduces the fluctuation in amplifier gain. While the amplification of the amplifier itself may vary greatly, the negative feedback causes the overall amplifier gain to be nearly constant. However, for this to be true the amplifier gain without feedback must be many times the amplifier gain with feedback.

The reason why negative feedback stabilizes the gain is easy to see. Suppose that the gain of the amplifier without feedback increases. Then in the absence of feedback, the ouput signal increases. With feedback the increased output signal feeds back to the input a larger feedback signal e_f. Since e_f subtracts from the incoming signal, a greater e_f means a smaller signal on the amplifier input. This reduces the output signal, so that the variation in output is not as great as it would be if there was no feedback. The higher the feedback factor β, the better the gain is stabilized.

Negative feedback using a high value for β is widely used in instrumentation to give highly stabilized gain, which is essential if instruments fed by amplifiers are to read accurately. Operational amplifiers used in analog computers are feedback amplifiers that have a very high gain (without feedback) and in which the amount of feedback can be varied to get precisely, and very reliably, the amount of gain (with feedback) that is desired. It is practical to stabilize the gain to within 0.1 per cent.

Because negative feedback stabilizes amplifier gain, the frequency response range of the amplifier is increased. You have learned how the gain of an ordinary audio amplifier drops off at low and at high audio frequencies. Since negative feedback stabilizes the gain, the range of constant amplifier gain will extend further into the low- and high-frequency regions. The discussion above assumes that β stays the same at all frequencies. Another advantage of negative feedback is that the frequency response can be shaped to desired characteristics by so designing the feedback circuit that β varies with frequency in a manner suitable for getting the desired frequency response.

WHAT HAVE YOU LEARNED?

1. A high value of β means (a) *(lower)(greater)* amount of feedback and a

(b) *(lower)(greater)* percentage of stage-introduced distortion in the output. If negative feedback is used, the stage gain is (c) *(increased)(decreased)* and (d) *(more)(fewer)* stages of amplification may be needed.

2. Negative feedback *(will)(will not)* reduce noise generated within the tube of the stage.

3. Negative feedback tends to keep the amplifier gain *(more)(less)* constant than it would be without the negative feedback.

4. If the gain of an amplifier without feedback is 7500 at 100 Hz and the feedback fraction is 30 per cent, calculate the gain with negative feedback A_f.

5. Refer to Problem 4. If the amplifier has a gain without feedback of 4000 at 30 Hz, calculate the gain with negative feedback. Assume the feedback fraction is the same in this instance.

6. Refer to Problem 4. At 15 kHz the amplifier has a gain without feedback of 3800. Assume the feedback fraction is unchanged and calculate the gain with negative feedback.

7. Refer to Problems 4, 5, and 6. Without negative feedback the gain of the amplifier varies greatly at 30 Hz and 15 kHz. With negative feedback the gain of the amplifier (a) *(is nearly constant)(varies a great deal)*. Thus by using negative feedback, the frequency response of the amplifier is (b) *(increased)(decreased)*.

ANSWERS

1. (a) Greater; (b) lower; (c) decreased; (d) more
2. Will . . . Negative feedback will reduce only the distortion introduced in the feedback loop, and this includes any noise generated by the tube of the stage.
3. More
4. 3.332 . . . $A_f = \dfrac{A}{1 - A\beta} = \dfrac{7500}{1 - (-0.3 \times 7500)} = \dfrac{7500}{2251} = 3.332.$

Note that, since the feedback is negative, the value of β is -0.3 instead of $+0.3$ and thus the denominator is the sum of 1 and $A\beta$ rather than the difference between A and β.

5. 3.331 6. 3.330

7. (a) Is nearly constant . . . At 30 Hz the gain of the amplifier without feedback decreases from 7500 to 4000, almost a 50 per cent decrease in amplification. With negative feedback the gain decreases from 3.332 to 3.331, which shows the gain in this instance to be nearly constant. (b) Increased . . . The frequency response is extended, but the overall gain of the amplifier is much reduced and more stages of amplification may be needed than would be the case if negative feedback were not employed.

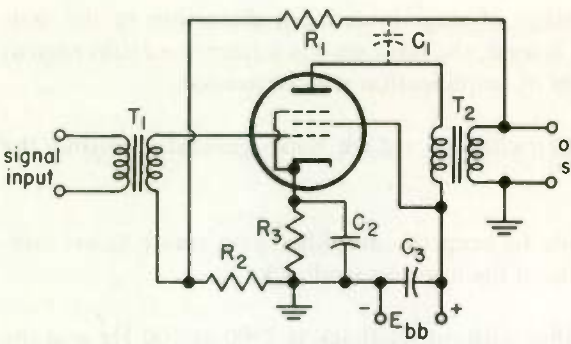

(a) Single-ended stage

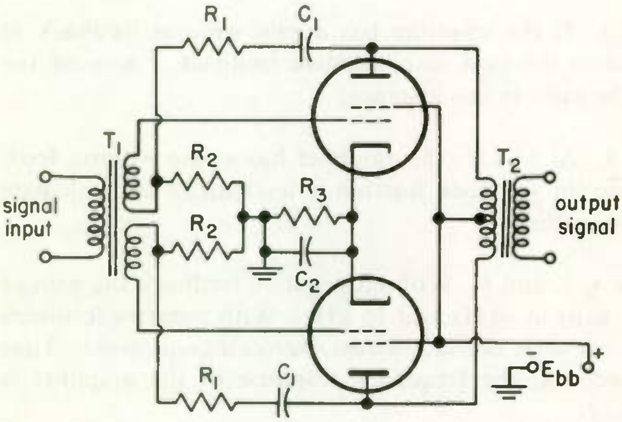

(b) Push-pull stage

Fig. 32 Negative voltage feedback around a single stage feeding into grid circuit.

20 PRACTICAL VOLTAGE FEEDBACK ARRANGEMENTS . . .

The number of stages within the feedback loop can vary from one to several. A suitable arrangement for a single stage is shown in Fig. 32(a). If a suitable tap were available on the secondary of T_2 for taking off the feedback signal, the circuit would be the same as Fig. 29(b) with the tube replacing the block labeled "amplifier." The voltage divider network R_1R_2 in Fig. 32(a) serves the same purposes as a secondary tap. The fraction of the output signal fed back, β, is equal to $\dfrac{R_2}{R_1 + R_2}$.

Instead of being taken from the secondary in Fig. 29(b), the feedback can be taken from the primary. When it is, the capacitor C_1 must be inserted in order to block the d-c plate voltage so that it will not also feedback to the grid. Although both primary and secondary are in common use as points for taking off the feedback signal, the two are not equivalent. When the signal is taken from the secondary, the transformer is also within the feedback loop, so that its characteristics are also affected by the negative feedback action. Atlhough connecting to the secondary reduces transformer-caused distortion and improves the frequency response, it may cause the amplifier to oscillate at very high and very low audio frequencies, particularly if the feedback is around more than one stage. Why negative feedback amplifiers are apt to oscillate if not carefully designed is explained later.

The feedback principles used in Fig. 32(b) are the same as in (a). Two feedback circuits are used, one for each tube of the push-pull arrangement.

The phase of the feedback signal is correct for negative feedback in Fig. 32(b), and in Fig. 32(a) when the feedback is taken from the primary, because the signal voltage output from a tube is 180° out of phase with the grid signal voltage. When the feedback is taken from the secondary, the feedback signal may be either in phase or out of phase with the grid signal. However, if the phase is wrong so that positive rather than negative feedback is obtained, correction is merely a matter of reversing the leads on either the primary or the secondary of the transformers.

All the negative feedback arrangements discussed in this topic are known as *voltage* feedback because the feedback is taken in each case from the output signal voltage.

The circuit of Fig. 33 is very similar to that of Fig. 32(a) except that the

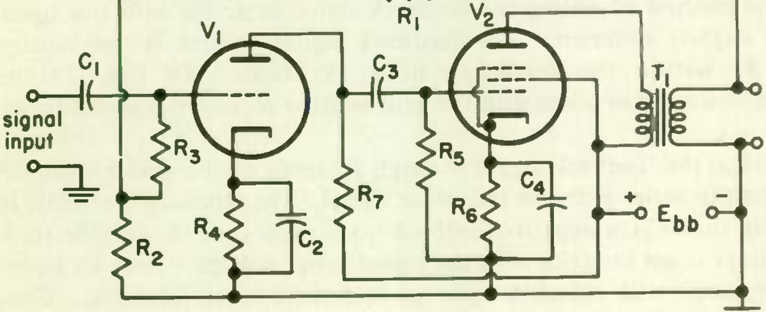

Fig. 33 Voltage feedback around two stages feeding into grid circuit.

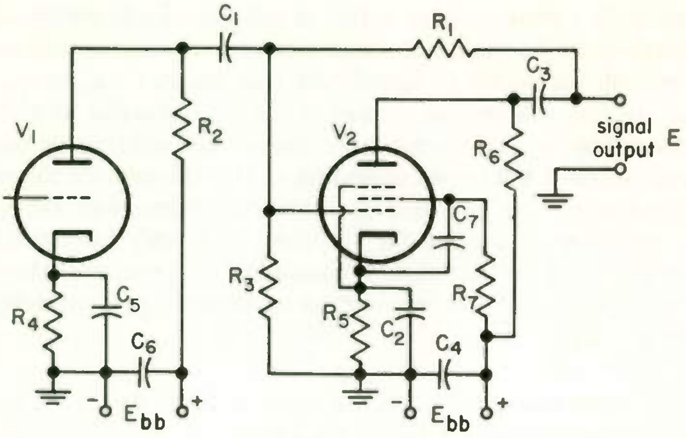

(a) Circuit

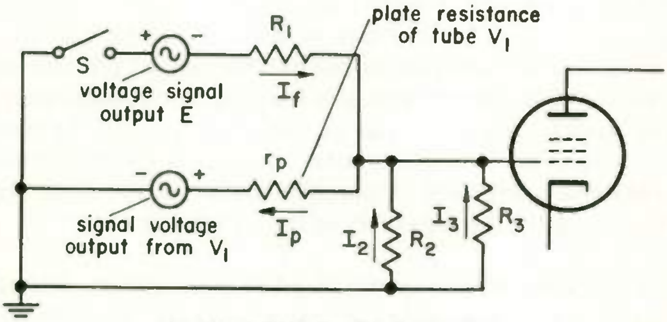

(b) Equivalent feedback circuit

Fig. 34 Voltage feedback into grid circuit in parallel with incoming signal.

feedback loop is around two stages instead of only one. Also, since *RC* coupling rather than an input transformer is used for the input to the first stage, the method of getting the feedback signal in series with the signal input is slightly different. The feedback signal voltage is the voltage across R_2 within the feedback network R_1R_2. In Fig. 33 the feedback voltage is in series with the grid resistor R_3 and the signal input.

In Fig. 34(a) the feedback signal through R_1 feeds to the grid in parallel rather than in series with the incoming signal. The equivalent circuit, in Fig. 34(b), shows how negative feedback takes place even though the feedback voltage is not in series with the signal input voltage. First let's consider the circuit with switch *S* open so that there is no feedback. Considering V_1 as the signal voltage source, this voltage causes a signal current I_p to flow through r_p and also through R_2 and R_3 in parallel. The signal on the grid is, of course, the voltage across R_3 caused by signal current I_3 flowing through R_3. When S is closed, the output signal voltage E also furnishes current (I_f) to the grid circuit.

Notice that, looking from the grid resistor R_3, the two voltage sources for the grid current I_3 (E and the signal output from V_1) are out of phase with each other. Hence, E is trying to force current through R_3 in the direction opposite to that of the current I_3 set up by the signal output from V_1. The effect of this bucking action of I_f is to reduce the grid signal current I_3, and hence the grid signal voltage. Therefore, I_f produces negative feedback, since it reduces the strength of the signal at the grid in accordance with the value of I_f.

WHAT HAVE YOU LEARNED?

1. How many stages are included in the feedback loop of the amplifier shown in Fig. 33?

2. Refer to Fig. 33. Could the feedback be taken from the primary of the output transformer rather than the secondary by using a capacitor in series with R_1 as shown by C_1.

3. How many stages are included in the feedback loop of the amplifier shown in Fig. 34(a)?

4. Does the circuit shown in Fig. 34(a) reduce any distortion that is generated in tube V_1?

5. The amplifier shown in Fig. 33 is brought to you for repair and you find that the output transformer T_1 has a shorted turn in the secondary. You replace the output transformer and, when you test the amplifier, a loud howl comes out of the speaker. (a) *What could cause this?* (b) *How could you correct the trouble?*

6. Refer to Fig. 32(b). The purpose of the two capacitors marked C_1 is to (a)____________________. The purpose of the resistors marked R_1 and R_2 is to form a voltage divider network for the purpose of (b)____________________. Resistor R_3 provides (c)________________ for the push-pull stage, and capacitor C_2 is used to (d)____________________.

7. Refer to Fig. 32(a). If resistor R_1 has a value of 480 kΩ and resistor R_2 has a value of 120 kΩ, the feedback fraction β will equal ________ per cent

1. Two . . . Note that the feedback loop is from the secondary of T_1 back to the grid of V_1, through V_1 and V_2, to the primary of T_1, and back to the secondary of T_1.
2. No . . . If the feedback were taken from the top of the primary of T_1, the polarity of the feedback would be regenerative rather than degenerative because there are two 180° phase shifts between the two stages. You could not tap the bottom of the primary of T_1, because this would place the tap at a-c ground.
3. One . . . Only the stage of V_2 is contained within the feedback loop.
4. No 5. (a) The amplifier has gone into oscillation at an audio frequency because the feedback is regenerative. (b) Reverse the leads of the primary or secondary of the output transformer, but not both. This will change the regenerative feedback to inverse feedback.
6. (a) Block the d-c plate voltage from the grid of the tube while passing the a-c feedback signal; (b) providing the correct amount of feedback signal to the grid of the tube. (c) cathode bias; (d) bypass the a-c around the resistor R_3 so the bias voltage will be a pure d-c.

7. 20 . . . $\beta = \dfrac{R_2}{R_1 + R_2} = \dfrac{120\text{ k}\Omega}{600\text{ k}\Omega} = 0.20$, or 20 per cent

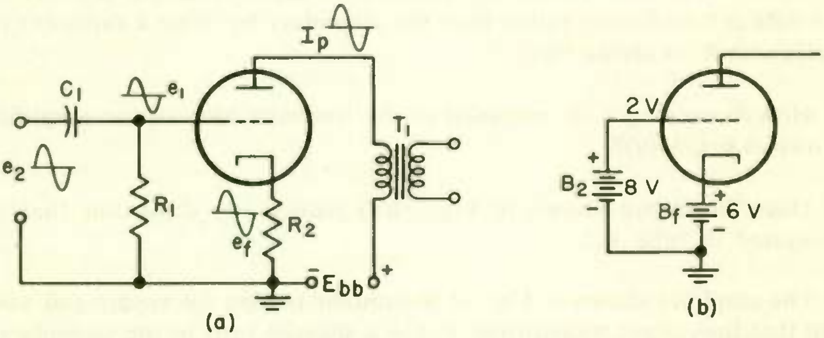

Fig. 35 Single-stage negative current feedback using cathode degeneration.

21 CURRENT FEEDBACK CIRCUITRY

. . . In the voltage feedback circuitry considered in the preceding topic, the amount of signal fed back was proportional to the signal voltage across the load. In this topic we consider circuits in which the voltage fed back is proportional to the current through the load. Negative feedback circuits of this type are said to use *current* feedback.

Feedback occurs in the single-stage circuit of Fig. 35 because no bypass capacitor is used across R_2. As a result the varying component I_p of the plate current flows through R_2, resulting in the feedback voltage e_f being developed across R_2. The type of feedback is current feedback because the plate signal current flows through the load (the primary of T_l) and

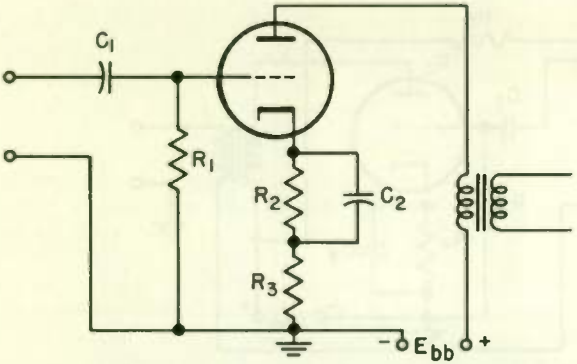

Fig. 36 **Cathode degenerative current feedback with part of cathode resistor bypassed to reduce β value.**

therefore e_f is proportional in amplitude to the signal current through the load.

Is the feedback e_f in Fig. 35 positive or negative? As the small sine waves drawn on the figure show, e_2 and e_f are in phase *with respect to ground.* In spite of this, e_f subtracts from e_2 to give e_1. To see why, look at the equivalent circuit in Fig. 35(b), where we have replaced e_2 and e_f with two batteries B_2 and B_f. Both batteries have the same polarity with respect to ground, and therefore they correspond polaritywise to the in-phase relationship between e_2 and e_f. But the voltage between grid and cathode in Fig. 35(b) is the difference between the voltages of B_2 and B_f.

Since one purpose of R_2 in Fig. 35 is to bias the grid, the value of this resistance is set by the amount of grid bias needed for the stage. If the feedback voltage e_f developed across the entire cathode resistance is more than is wanted, part of the resistance can be bypassed as shown in Fig. 36.

Figure 37 shows current feedback around a two-stage loop. The feedback voltage is developed across the unbypassed capacitor R_2. Notice that R_2 is in series with the output signal, which is why the circuit is described as current feedback. The signal current output from both V_1 and V_2 flows through R_2. However, because of amplification, the signal current in R_2 from V_2 is much greater than the signal current from V_1, and therefore it produces most of the feedback voltage across R_2. Hence, both stages are within the feedback loop.

The fact that the feedback voltage is generated across the cathode resistor does not necessarily mean that current feedback is used. In Fig. 38 the main feedback current is taken from across the output (rather than in

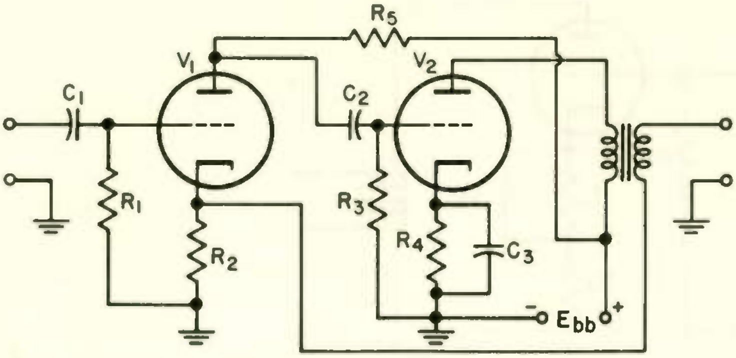

Fig. 37 Current feedback around two stages.

series with it) and is therefore voltage feedback. Since the feedback is around two stages, we can't run the feedback back to the grid, because that would produce positive feedback. To obtain negative voltage feedback, the feedback must be to the grid when the loop is around an odd number of stages, and it must be to the cathode if an even number of stages are within the loop. Of course, if there is a transformer within the loop, these requirements do not hold; you can always reverse the polarity of the feedback, if required, by reversing either the primary or secondary transformer leads.

WHAT HAVE YOU LEARNED?

1. If the feedback voltage is proportional to the voltage across the load, the feedback is (a) *(voltage)(current)* feedback. If the feedback voltage is proportional to the current through the load, the feedback is (b) ________________ feedback.

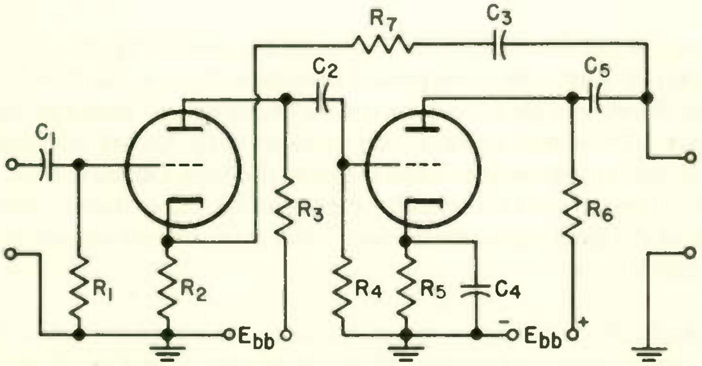

Fig. 38 Voltage feedback by means of cathode degeneration.

2. The feedback path shown in Fig. 37 shows that the total current through resistor R_2 is composed of the current flowing through tube V_1 and the entire output (a)*(voltage)(current).* Thus the feedback voltage across R_2 is proportional to the (b)*(output voltage)(output current)* and the feedback is (c)______________ feedback.

3. The feedback current shown in Fig. 38(a) (a)*(is)(is not)* the total output signal current. The feedback current that flows is dependent upon the (b)______________ across the output terminals, and hence the feedback is (c)______________ feedback.

4. If an *RC*-coupled amplifier has five stages and you wanted to use inverse feedback across three of them, you could feed back signal current from the plate of the fifth stage to the *(grid)(cathode)* of the third stage.

ANSWERS

1. (a) Voltage; (b) current 2. (a) Current; (b) output current (c) current
3. (a) Is not; (b) voltage; (c) voltage 4. Grid

22 COMPARISON OF VOLTAGE AND CURRENT FEEDBACK . . .

Voltage feedback reduces distortion and noise generated within the loop from the output signal voltage. Current feedback reduces distortion and noise generated within the loop from the output signal current. If the load is resistive, the two effects are synonymous. The current through a resistance is always exactly proportional to the voltage across that resistance. Therefore, if the signal voltage is distorted, so is the signal current distorted through a resistance to which the signal voltage is applied. Conversely, any distortion in the signal current through a resistance causes a corresponding distortion in the signal voltage across that resistance.

If a transformer is the load in the feedback loop, the effects of voltage and current feedback are not the same. Transformer losses and winding reactance vary with frequency. Since noise and distortion represent frequencies different from the desired signal frequency, the response of the transformer to the spurious signal components is different than to the desired signal. As a result voltage and current feedback have different characteristics, which will next be listed. Because of the complexity of transformer action when losses and distortion are considered, it is not practical for us to give the reasons for these differences.

Voltage feedback taken from the primary improves frequency response at low frequencies and reduces amplitude distortion produced by nonlinearities in the tube and by transformer core saturation, but the high-frequency response is not improved. With current feedback the frequency response is better at high frequencies and worse at low frequencies than would be the case in the absence of feedback. Also, current feedback increases amplitude distortion due to transformer core saturation. If the voltage feedback is used and it is taken from the secondary, the response at both high and low frequencies is improved. Since the entire transformer, rather than just the primary, is now within the feedback loop, distortion is less than when voltage feedback is taken from the primary. However, the amplifier is then more apt to oscillate.

Careful design is required to prevent negative feedback amplifiers from oscillating, particularly if there is more than one stage in the feedback loop. The feedback is negative over the frequency range in which the amplifier is intended to operate, and therefore it will not oscillate at any frequency within this range. However, at both very low and very high frequencies, the amplifier stages produce phase shifts that may at some frequency produce positive feedback. If the amplifier gain is sufficient at this frequency, oscillations will occur. The reactance of circuit capacitors, stray and tube capacitances, and circuit inductance all shift the signal phase.

Transformers also shift the signal phase at very high and very low frequencies. The phase shifts may easily accumulate to 180° from the normal phase reversals given by the tubes. As a result the feedback at the frequency at which this occurs is positive rather than negative, so that the circuit oscillates. Negative feedback amplifier loops are generally limited to three stages, since it is extremely difficult to avoid oscillations when more stages are used.

An important difference between voltage and current feedback is in respect to their output impedances. Voltage feedback reduces the amplifier output impedance from the output impedance value without feedback. Current feedback increases the output impedance. Voltage feedback keeps the output signal voltage fairly constant under varying load conditions. You will remember that the definition of a low-impedance source is one that is able to keep its voltage nearly constant as the load varies. Current feedback keeps the output signal current fairly constant under varying load conditions. The output signal is thus a constant-current source, which you will remember is a high-impedance source.

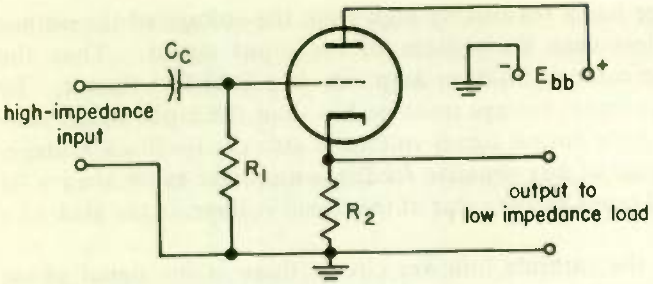

Fig. 39 Cathode follower amplifier.

WHAT HAVE YOU LEARNED?

1. The current through a resistance is (a) *(inversely)(exactly)* proportional to the voltage across the resistance. If the signal current through a resistance contains distortion, the signal voltage across the resistance (b) *(will) (will not)* contain distortion.

2. If the feedback is taken from the primary of the output transformer, distortion introduced in the secondary of the transformer (a) *(will)(will not)* be reduced by the action of the feedback signal. If the feedback signal is taken from the secondary of the output transformer, distortion introduced in the transformer (b) *(will)(will not)* be reduced by the action of the feedback signal.

3. If you had an amplifier that suddenly emitted a very low-pitched howl, would you suspect the negative feedback loop even though there was no transformer in the feedback loop?

ANSWERS

1. (a) Exactly; (b) will 2. (a) Will not; (b) will
3. Yes . . . It is not necessary to have a transformer within the feedback loop in order for low- or high-frequency oscillation to occur.

23 THE CATHODE FOLLOWER AMPLIFIER . . . The important negative feedback circuit of Fig. 39 is known as a cathode follower circuit. The feedback voltage is developed across the unbypassed cathode resistor R_2. However, since the feedback signal voltage is also the signal voltage to the load, the circuit uses voltage feedback. Since voltage feedback is used, the output signal is a low-impedance signal source. The input signal, working into the grid of the tube, sees a very high impedance. This suggests the most important use of the cathode follower circuit, that of matching a high-impedance input to a low-impedance load.

Assuming the stage has a reasonably high gain, the voltage of the output signal is a little less than the voltage of the input signal. Thus the voltage gain of the cathode follower amplifier is a little less than 1. To see why the output signal voltage must be less than the input signal voltage, remember that the output signal voltage is also the feedback voltage. The feedback voltage of any negative feedback amplifier must always be less than the signal input by the value of the signal voltage on the grid.

Note also that in the cathode follower circuit there is no signal phase inversion between input and output. The output signal voltage is in phase with the input signal voltage, which you can see from Fig. 35(a). The cathode follower takes its name from the fact that the input and output signals are in phase and are of nearly equal voltage amplitudes.

Because of its low-impedance output, the cathode follower is able to supply considerable current (and therefore considerable power) to its load. The cathode follower is thus a power amplifier. Because of its high input impedance, the cathode follower can be fed from a high-impedance source without drawing appreciable power from that source, and therefore without excessively loading the circuit. On the other hand, its output can be connected to a low-impedance load—such as a coaxial cable—to deliver a relatively large power to the load.

When the input signal to a cathode follower circuit does not contain a d-c component, capacitor C_c, and consequently R_1, can be eliminated. The advantage to this is to provide the stage with a uniform power gain down to very low frequencies. Without the coupling capacitor the circuit can pass frequencies from about 10 Hz to 4 MHz or higher without appreciable distortion. For this reason cathode followers are often used in oscilloscopes and vacuum-tube voltmeters, which must be used to make measurements over a wide range of frequencies.

In summary, the cathode follower provides the following characteristics:

1. Excellent power amplification
2. High input impedance
3. Low output impedance
4. Excellent frequency response
5. Voltage amplification that approaches but never reaches unity
6. An output that is in phase with the input

1. The output signal voltage of the cathode follower amplifier is also the *(voltage)(current)* feedback signal.

2. Because of the cathode follower high input impedance and low output impedance, the circuit can be used to match a (a)__________ output impedance circuit to a (b)__________ impedance load.

3. If the input coupling capacitor and grid resistor of the cathode follower are removed, the amplifier can be made to have a *(narrow)(wide)* frequency response. Because of this, the cathode follower amplifier is quite often used in various types of test equipment.

ANSWERS

1. Voltage 2. (a) High; (b) low 3. Wide

APPENDIX I

24 DERIVATION OF FEEDBACK GAIN FORMULA . . . Refer to page 52 and Fig. 28.

$$e_1 = \frac{E}{A}$$

$$e_f = \beta E$$

$$e_1 = e_2 + e_f$$

$$e_2 = e_1 - e_f = \frac{E}{A} - \beta E = \frac{E - A\beta E}{A} = \frac{E(1 - A\beta)}{A}$$

$$\text{gain with feedback} = \frac{E}{C_2} = E \div \frac{E(1 - A\beta)}{A}$$

$$= E \times \frac{A}{E(1 - A\beta)} = \frac{EA}{E(1 - A\beta)} = \frac{A}{1 - A\beta}$$

UNTUNED AMPLIFIER CIRCUITRY

EXAMINATION

Circle the number of the correct answer to each question that follows. When you are finished, transfer the answers to the answer sheet by putting X's in the proper squares. When the graded answer sheet is returned to you, correct in this book any questions you may have missed. By doing so, you will have a record of the correct answers to all the questions for review purposes.

1. A triode tube can be considered as an approximate constant-voltage source because
   (1) the a-c voltage generated in the tube (for example, E_1 in Fig. 1) does not vary with a change in load.
   (2) the plate signal current through a triode does not vary with a change in plate load resistance.
   (3) the plate resistance of the triode changes so the voltage delivered to the plate load resistance remains constant.
   (4) it has a relatively low plate resistance in series with a relatively high resistance load.

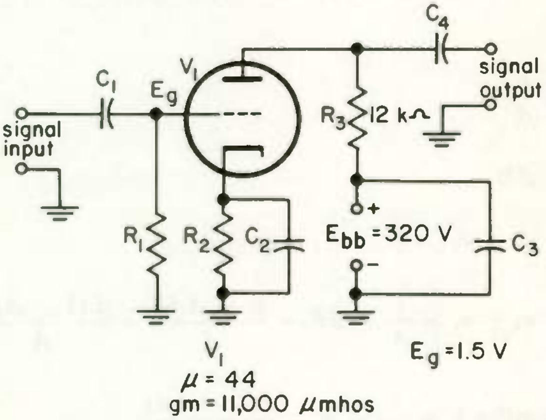

Fig. 40

2. Refer to Fig. 40. The plate resistance of V_1 is

(1) 400 Ω.	(3) 2500 Ω.	(5) 4840 Ω.
(2) 484 Ω.	(4) 4000 Ω.	(6) 25,000 Ω.

3. Refer to Fig. 40. What value of signal current will flow through R_3?

Assume the reactance of C_2 and of C_3 is zero.
(1) 4.13 ma (2) 5.5 mA (3) 41.3 mA (4) 55 mA

4. Refer to Fig. 40. What is the voltage gain of the stage?
(1) 3.3 (2) 12 (3) 33 (4) 44

5. Refer to Fig. 40. If R_3 were changed to 16 kΩ, the voltage gain of the stage would be
(1) 3.52. (2) 8.8. (3) 35.2. (4) 88.

6. When considering signal voltage gain, for a stage, the important tube parameter is
(1) g_m for a triode and μ for a pentode.
(2) μ for both a triode and a pentode.
(3) r_p for a triode and g_m for a pentode.
(4) μ for a triode and g_m for a pentode.

7. Refer to Fig. 40. If the voltage gain suddenly decreased, with no increase in distortion, one cause might be
(1) an open C_2.
(2) a shorted C_2.
(3) R_3 increased in value.
(4) C_2 is leaky.
(5) C_1 is leaky.
(6) C_3 is leaky.

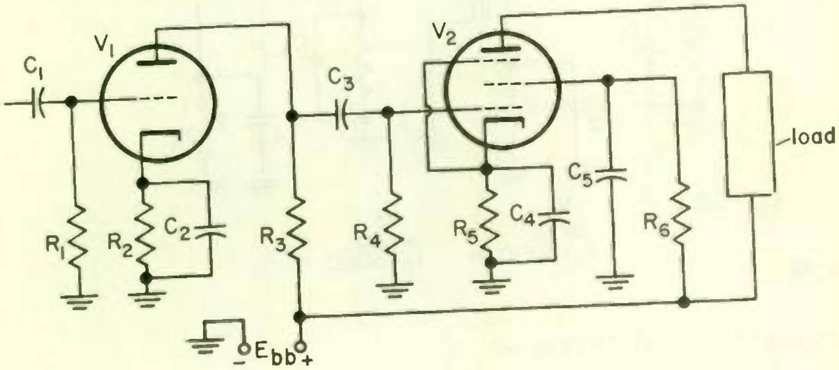

Fig. 41

8. Refer to Fig. 41. As the frequency of the signal voltage applied to the grid of V_1 decreases below 75 Hz, the signal voltage gain of stage V_1 will
(1) increase because no signal current is lost through stray capacitances.
(2) decrease because the reactance of C_3 decreases.
(3) decrease because of regeneration caused by C_2.
(4) decrease because the reactance of C_1 and C_2 increases.

9. Refer to Fig. 41. As the signal voltage frequency increases above 15 kHz, the signal voltage applied to the load
   (1) increases because the reactance of C_1, C_2, C_3, C_4, and C_5 decreases
   (2) increases because a pentode can amplify high frequencies better than a triode.
   (3) decreases because of the effect of intertube and stray capacitances.
   (4) decreases because of degeneration caused by C_2.

10. One way to substantially improve the frequency response of an untuned amplifier would be to
   (1) increase the capacitance of all coupling and bypass capacitors.
   (2) decrease the value of the grid resistor.
   (3) decrease the value of the plate load resistor.
   (4) do all of the above.

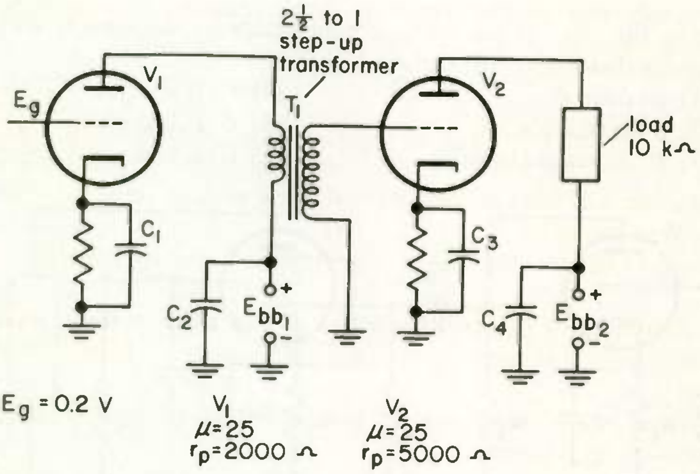

Fig. 42

Question 11 to 15 refer to Fig. 42.

11. Assume the reactance of capacitors C_1 and C_2 is zero. Calculate the value of signal voltage applied to the primary of T_1 for middle frequencies.
   (1) 5.0 V (2) 3.0 V (3) 0.5 V (4) 49.9 V

12. Calculate the signal voltage gain of the first stage.
   (1) 62.5 (2) 37.5 (3) 75 (4) 126

13. Assume the reactance of capacitors C_3 and C_4 is zero. Calculate the

value of signal current through the load of V_2.

(1) 0.0208 A (2) 0.0142 A (3) 0.125 A (4) 0.2083 A

14. Calculate the signal voltage across the load.

(1) 12.5 V (2) 20.8 V (3) 208 V (4) 142 V

15. Including both stages, what is the total signal voltage gain of the amplifier?

(1) 1042 (2) 104.2 (3) 15,500 (4) 25,000

16. Comparing an *RC*-coupled amplifier with a transformer-coupled amplifier, you can state
    (1) the transformer-coupled amplifier is more efficient.
    (2) the *RC*-coupled amplifier passes a wider bandwidth of frequencies.
    (3) using the same type tubes and the same number of stages, the *RC*-coupled amplifier will have less signal voltage gain than the transformer-coupled amplifier if the coupling transformers have step-up ratios.
    (4) all of the above.

17. Assume you are designing a power amplifier circuit using a pentode tube. If the tube has an amplification factor of 4750 and a transconductance of 9500 μmhos, a good value of load impedance for low distortion would be

(1) 15 kΩ. (2) 25 kΩ. (3) 75 kΩ. (4) 250 kΩ.

18. The flattening of the positive peaks of the plate current waveform could be caused by an incorrectly chosen operating point. The input signal
    (1) draws grid current, and the bottom of the output signal current waveform is clipped.
    (2) causes the tube to be biased to cutoff, and the bottom of the output signal current waveform is clipped.
    (3) draws grid current, and the top of the output signal current waveform is clipped.
    (4) drives the tube into cutoff, and the top of the output signal current waveform is clipped.

19. A pentode tube can be considered as an approximate constant-current source because
    (1) the plate signal current through a pentode does not vary with a change in grid signal voltage.
    (2) the plate resistance of the pentode changes so the current delivered to the plate load resistance remains constant. **(Cont'd)**

(3) the a-c signal current generated in the tube does not vary with a change in load.
(4) it has a relatively high plate resistance in series with a relatively low-resistance load.

20. You can tell the relative value of a tube's plate resistance from a glance at the tube characteristic curves because the plate resistance is
(1) relatively high if the characteristic curves slope considerably.
(2) relatively high if the characteristic curves slope very little.
(3) relatively low if the characteristic curves slope very little.
(4) low if the curve of the knee of the characteristic curve is very sharp.

21. The amplification factor of a tube is equal to the
(1) change in grid voltage divided by the change in plate voltage caused by the change in grid voltage, with the plate current held constant.
(2) change in plate current divided by the change in grid voltage that caused the change in plate current with the plate voltage held constant.
(3) change in plate voltage divided by the change in grid voltage that caused the change in plate voltage with the plate current held constant.
(4) change in plate voltage divided by the change in plate current caused by the change in plate voltage with the grid voltage held constant.

22. Which load line shown in Fig. 43(b) is correctly drawn for the circuit shown in Fig. 43(a)?
(1) line 1 (2) line 2 (3) line 3 (4) line 4

23. Using the load line found in Question 22, find the value of E_c in Fig. 43(a).
(1) 0 V (3) 2 V (5) 4 V
(2) 1 V (4) 3 V (6) 5 V

24. By using the load line found in Question 22, find the value of the no-signal plate current of the circuit shown in Fig. 43(a).
(1) 8 mA (2) 12 mA (3) 20 mA (4) 30 mA

25. By using the value of E_c found in Question 23 and assuming E_g has a peak value of 1 V, find the transconductance of the tube from Fig. 43.
(1) 5500 μmhos (3) 11,000 μmhos
(2) 8500 μmhos (4) 17,000 μmhos

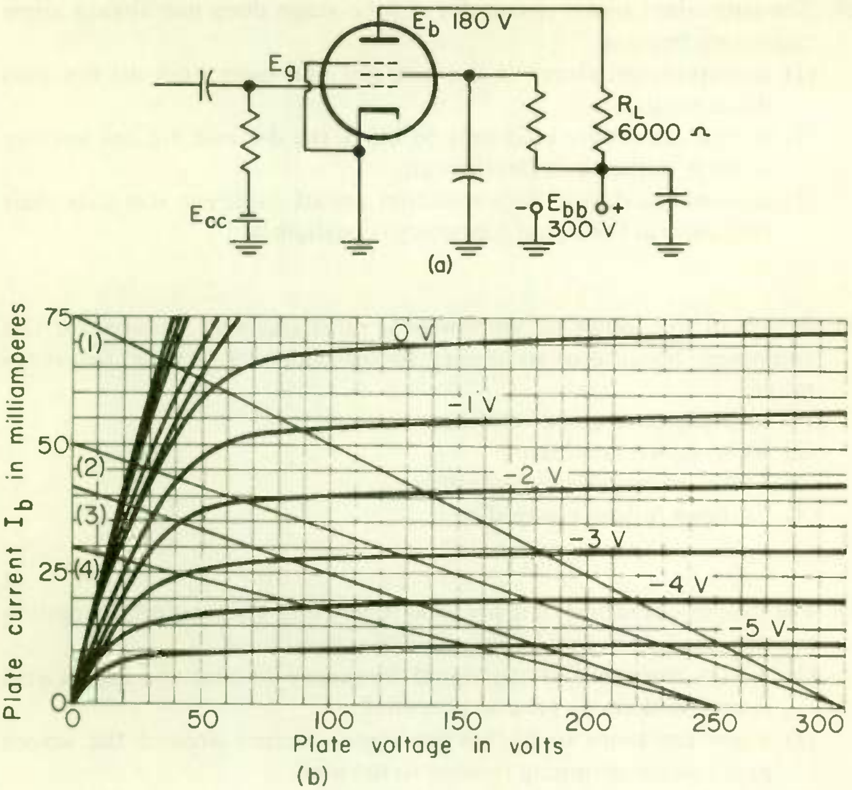

Fig. 43

26. What is the maximum number of stages of amplification generally included in a negative feedback loop?
    (1) 2 (2) 3 (3) 4 (4) 5

27. If you had three stages of *RC*-coupled amplification and fed back a signal from the plate of the third tube to the first stage, you would, for negative feedback apply the feedback signal to the
    (1) cathode of the first-stage tube.
    (2) plate of the first-stage.
    (3) grid of the first-stage tube.
    (4) grid or cathode of the first-stage tube.

28. Two features of the cathode follower amplifier are
    (1) low input impedance and a voltage gain just less than 1.
    (2) high input impedance and a voltage gain greater than 1.
    (3) high output impedance and considerable current gain.
    (4) high input impedance and considerable power gain.

29. The equivalent signal circuit for a tube stage does not always show capacitors because
    (1) the equivalent circuit is a d-c circuit and capacitors do not pass d-c current.
    (2) the capacitors are used only to block the d-c and d-c has nothing to do with the equivalent circuit.
    (3) it is assumed that the capacitors are of sufficient size that their reactance at the signal frequency is negligible.

30. Which of the following amplifiers is most likely to be used in test equipment because of its ability to operate over a wide frequency range?
    (1) Impedance-coupled amplifier
    (2) *RC*-coupled amplifier
    (3) Transformer-coupled amplifier
    (4) Cathode follower amplifier

31. For proper operation of a pentode tube using a screen grid dropping resistor, the screen grid bypass capacitor must have
    (1) a high reactance at the signal frequency so that the screen grid is kept well above ground potential.
    (2) a low reactance to bypass the signal current around the screen grid voltage-dropping resistor to the load.
    (3) a high reactance at the signal frequency to keep signal current losses as low as possible.
    (4) as low a reactance as possible at the signal frequency so the screen grid is kept at signal ground potential.

32. An impedance-coupled amplifier best amplifies
    (1) low frequencies.
    (2) a wide range of frequencies.
    (3) a relatively narrow band of frequencies.
    (4) frequencies above 75 MHz.

33. If you wanted to build an amplifier that was inexpensive and relatively troublefree and had good frequency response, you would build
    (1) an impedance-coupled amplifier.
    (2) a transformer-coupled amplifier.
    (3) a combination of impedance- and transformer-coupled amplifier.
    (4) an *RC*-coupled amplifier.

34. If you had a three-stage amplifier that incorporated negative feedback between the second and third stages, would noise generated in the tube of the first stage be reduced by the negative feedback?
    (1) Yes, but only at low frequencies.
    (2) No
    (3) Yes, but only at the medium audio frequencies.

35. The static or d-c plate resistance is not the same value as the dynamic plate resistance because
    (1) the dynamic plate resistance is the resistance seen by the d-c current through the tube and the static plate resistance is the resistance seen by the a-c current through the tube.
    (2) the dynamic plate resistance is the plate resistance at a given operating point, and the static plate resistance is the plate resistance over the operating range of the tube.
    (3) the characteristic curves of a tube are nonlinear.

36. A negative feedback loop, because of poor design, can cause an amplifier to oscillate
    (1) at some frequency above the range of frequencies at which the amplifier is designed to operate.
    (2) at some frequency below the range of frequencies at which the amplifier is designed to operate.
    (3) even though the feedback loop does not contain a transformer.
    (4) for all of the above reasons.

37. The transconductance of a tube is equal to
    (choose your answer from the selections of Question 21)

END OF EXAM


CLEVELAND INSTITUTE OF ELECTRONICS

CLEVELAND INSTITUTE OF ELECTRONICS / CLEVELAND, OHIO

electronics

CLEVELAND INSTITUTE OF ELECTRONICS / CLEVELAND, OHIO

Radio-frequency Amplifiers

2406-4

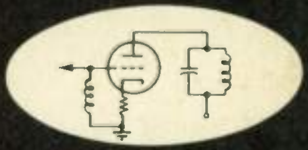

An AUTO-PROGRAMMED® Lesson

ABOUT THE AUTHOR

This text on Radio-frequency Amplifiers was written by John M. Doyle. In writing this lesson, Mr. Doyle's constant aim was to ensure that the material presented was accurate, useful, and interesting.

Mr. Doyle has been engaged in writing electronics material for home-study schools for several years. He is a senior member of the Society of Technical Writers and Publishers as well as a member of the IRE.

He is the author of *Pulse Fundamentals,* a technical institute level textbook. Mr. Doyle is a consultant on technical writing for several organizations.

This is an AUTO-PROGRAMMED* Lesson exclusive with the Cleveland Institute of Electronics. It is your assurance of the finest in technical education and training.

**Registered Trademark*

Accredited by the Accrediting Commission of the National Home Study Council

The Accrediting Commission has been approved by the U.S. Office of Education as a "nationally recognized accrediting agency".

CLEVELAND INSTITUTE OF ELECTRONICS

Radio-frequency Amplifiers

By JOHN M. DOYLE
Technical Staff
Cleveland Institute of Electronics

2406-4

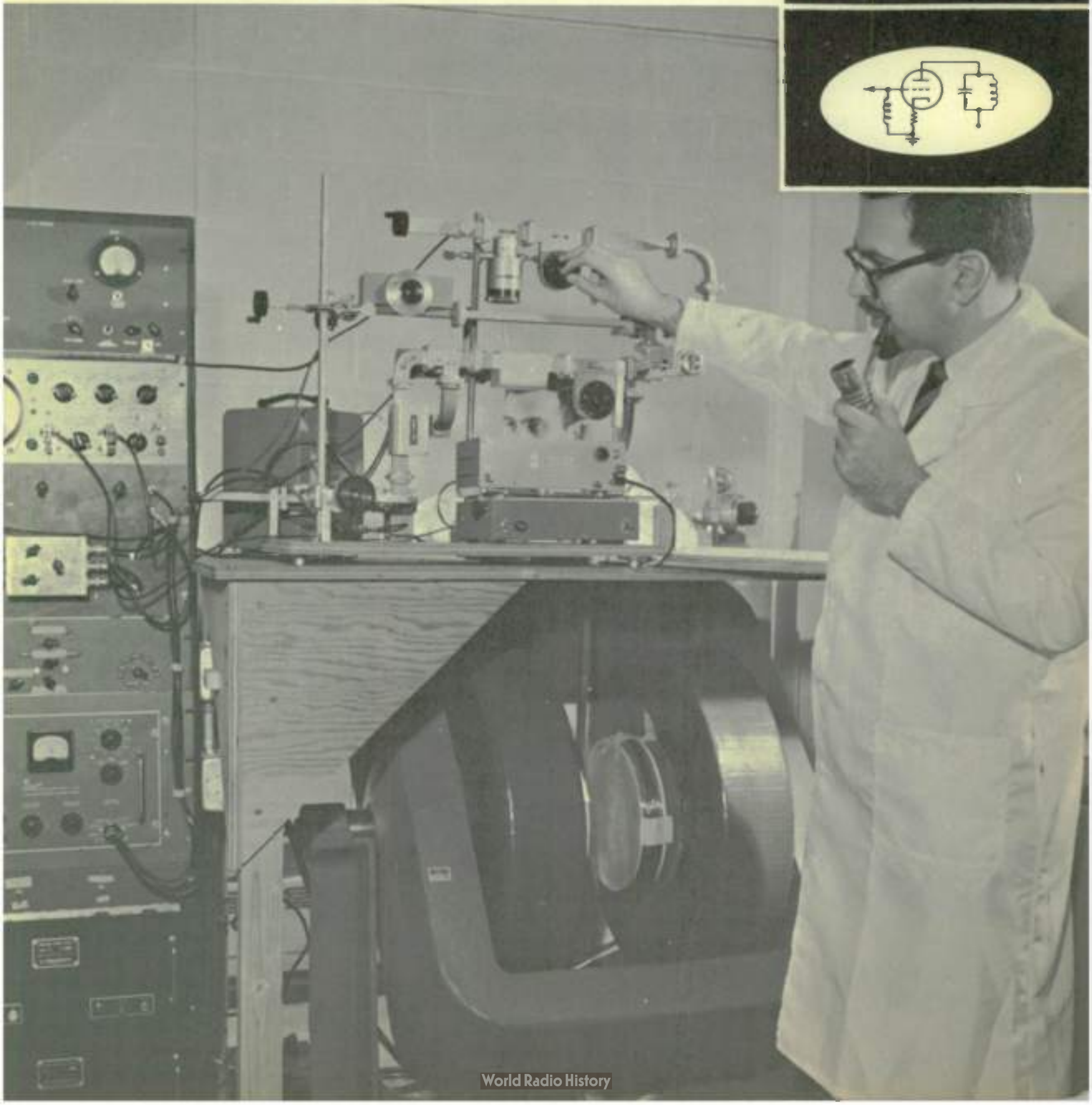

In this lesson you will learn...

Research in Maser (microwave amplification by stimulated emission of radiation) techniques. Photo: Courtesy, ITT Federal Laboratories

Library of Congress Catalog Card Number: 63-12735

SECOND EDITION/Fourth Revised Printing/December, 1967.

2406-4

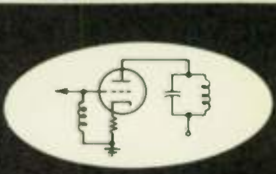

A chat with your instructor

Radio-frequency amplifiers are used not only in radio and television receivers and transmitters but also in microwave circuits, X-ray equipment, pulsing apparatus, and control devices – in short, wherever radio frequencies are employed.

In this lesson we will be concerned with the basic principles of r-f tube and transistor amplifier circuits, how different types of circuits fulfill specific purposes, and how amplifiers work and are maintained.

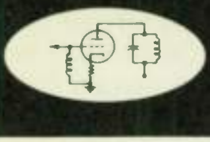

Radio-Frequency Amplifiers

1 TYPES AND USES OF R-F AMPLIFIERS . . . Radio-frequency amplifiers are used to boost the voltage or power of radio-frequency signals applied to their input. They are used in receiving and transmitting equipment and in many types of industrial electronic equipment. The r-f amplifiers used to boost the signal power are called *power amplifiers*, and those used to boost the signal voltage are called *voltage amplifiers*.

Most r-f amplifiers in receiving equipment are voltage amplifiers or, when transistors are used, current amplifiers. Both power and voltage r-f amplifiers are used in transmitters and industrial equipment.

2 OPERATION OF R-F AMPLIFIERS . . . Whenever practical, r-f power amplifiers are operated class C, since this offers greater efficiency and greater power output than class A or class B operation.

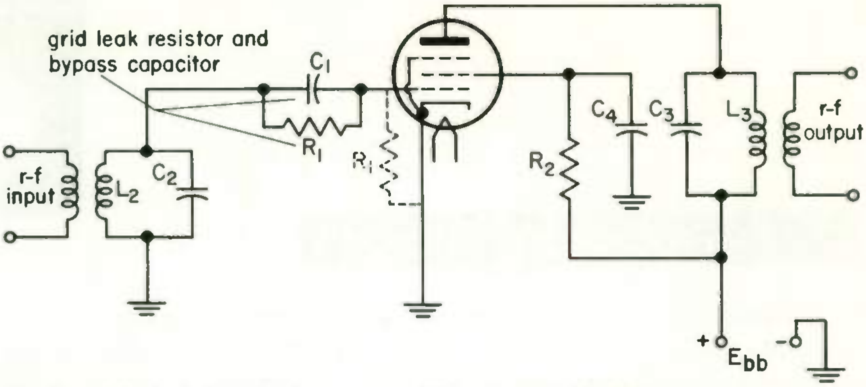

Fig. 1 A typical class C r-f power amplifier using grid leak bias.

Class B operation is used when amplifying a modulated r-f wave, since class C operation would cause intolerable distortion of the intelligence. Class A amplifiers are usually used as r-f voltage amplifiers. Although class A amplifiers are relatively inefficient, total power losses are low because of the small amount of power used in voltage amplifiers.

In review, the plate current in a class C amplifier consists of a number of short pulses which are converted into a sine-wave output by the flywheel action of the amplifier's plate tank circuit. On the other hand, plate current flows continuously in a class A amplifier and for at least half the time in a class B stage.

The bias for class C amplifiers is often obtained by a grid leak arrangement as shown in Fig. 1. This arrangement has the advantage of simplicity; also, the bias tends to be self-adjusting with respect to the amplitude of the grid signal. The stronger the signal, the greater the negative bias developed by the grid leak.

Grid leak bias has a disadvantage, however. If the excitation (input) signal to the stage should ever be removed for any reason, no bias will be developed and the plate current will rise to the point at which it may permanently damage the tube. To protect against this possibility, a resistor and bypass capacitor are often placed in the amplifier's cathode circuit to limit maximum plate current, as shown by R_1C_1 in Fig. 2. Now part of the total bias is developed by R_1C_1 and part by the grid leak circuit C_2R_2

The grid leak resistor must be electrically connected between grid and cathode as far as d-c is concerned. In Fig. 1, since L_2 has negligible

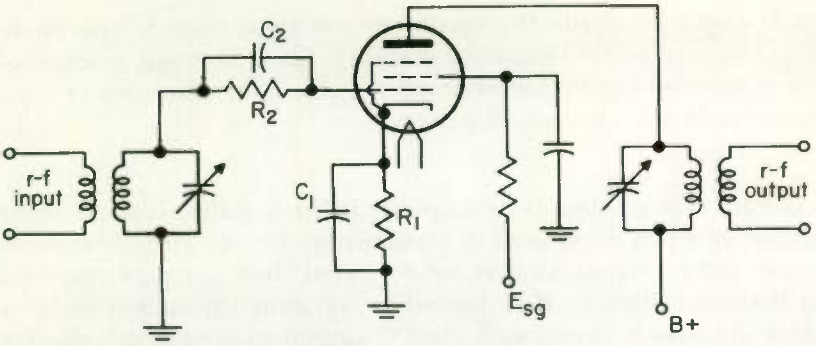

Fig. 2 Use of a cathode resistor R_1 as a safety device.

d-c resistance, R_1 is effectively connected between grid and cathode through ground. It may be directly connected as shown by the dashed line.

WHAT HAVE YOU LEARNED?

1. You are called in to service a radio transmitter using grid leak bias, and, upon checking, you find that the class C r-f power amplifier stage tube is operating with excessive plate current. What might you first suspect as being the trouble?

2. An r-f amplifier operated as class (a) ________ can use a tube with a lower plate dissipation rating than an amplifier with the same power output rating operated class A because of the greater (b) ____________ of this class of operation.

3. Grid leak bias should be used only when the input signal to a class C amplifier is __________ at all times.

ANSWERS

1. Lack of signal to the input of the class C power amplifier stage . . . This would reduce the bias to zero and cause very high plate current flow.
2. (a) C (b) Efficiency . . . With higher efficiency less power is lost on the plate as heat. 3. Present.

3 CLASS B R-F POWER AMPLIFIERS . . . R-f power amplifiers operating class B are used in two general types of applications in transmitters. The first general application is as a buffer amplifier stage. (The buffer stage is the first stage following the oscillator.)

Class B operation loads the oscillator less than class C operation, which is important for frequency stability. Since no great amount of power is handled by the buffer amplifier, the lower efficiency of class B operation is not a serious objection.

The second type of class B r-f amplifier is the so-called class B linear amplifier, which is often used in transmitters for the amplification of a modulated r-f signal, that is, an r-f signal that has superimposed upon it the intelligence it is desired to transmit through space to a receiver. As already mentioned, class C amplifiers are not suitable for this purpose because they cause excessive distortion of the intelligence. Since we are not specifically concerned with transmitters in this lesson, we need not at this time be concerned with the techniques by which modulation may be accomplished.

In general, the plate voltage, bias voltage, load resistance, and power output listed in tube tables for class B audio amplifiers also apply to class B linear r-f amplifiers.

When using tetrode, pentode, or beam power tubes in either the class B or the class C power amplifier, the screen grid must be held at a constant value. The use of a separate, well-regulated power supply for the screen grid is, therefore, a common practice.

WHAT HAVE YOU LEARNED?

1. Compared to class A or class B amplifiers, the efficiency and power output of a class C amplifier is (a) __________. However, the power gain of a class C amplifier is (b) __________ than that of a class A or class B amplifier under similar conditions.

2. You are servicing a class C r-f amplifier. The cathode is connected directly to ground, and grid leak bias is used. The plate of the tube has been ruined because of excessive dissipation. You should first check to see if the source of (a) __________ is operative. If it is not, no (b) __________ is developed to control (c) __________ current in the amplifier. As a precaution against a recurrence of this trouble you could connect a (d) __________ and (e) __________ in the (f) __________ circuit of the amplifier.

1. (a) High (b) Less . . . Considerable input power to the grid is required to drive a class C stage.
2. (a) Excitation; (b) bias; (c) plate; (d) resistor (or capacitor) (e) capacitor (or resistor); (f) cathode.

R-F AMPLIFIER NEUTRALIZATION

Thus far, all of the r-f amplifiers shown have used pentode-type tubes. Actually, triodes are very often used in r-f power amplifiers. When a triode is used, neutralization is necessary to keep the amplifier from oscillating. With pentode tubes neutralization is not generally required for frequencies below 30 mc, since the screen grid reduces the signal feedback from plate to grid to a low value.

4 PLATE NEUTRALIZATION . . . Perhaps the most common method of achieving neutralization is by use of the plate, or Hazeltine, method illustrated in Fig. 3. Notice that the coil in the plate tank circuit is tapped and, as far as the r-f currents are concerned, the tap is returned to ground through the low reactance of bypass capacitor *C*.

Now, with respect to ground, the signal at the top of the tapped coil is 180° out of phase with the signal at the bottom of the tapped coil.

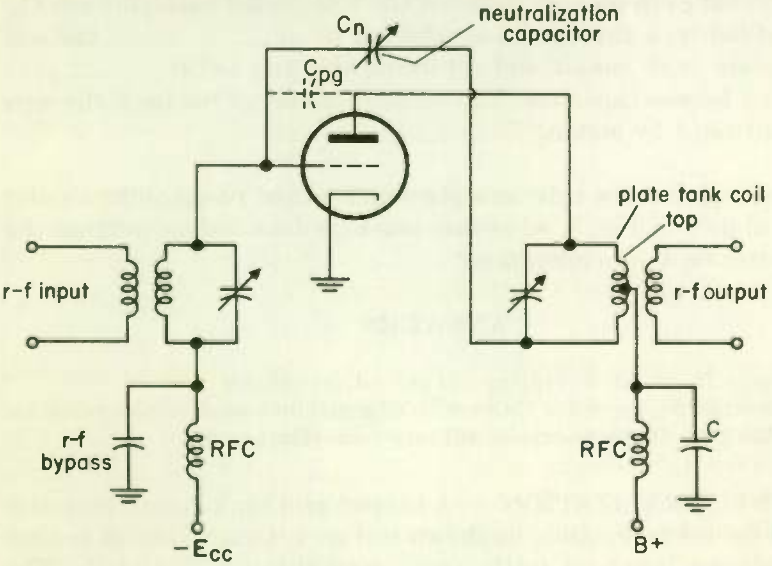

Fig. 3 Plate (Hazeltine) neutralization.

By connecting neutralizing capacitor C_n from the bottom of the plate-tuned circuit to the grid of the amplifier and by controlling the amount of feedback through C_n by making it variable we can neutralize the undesirable feedback through the interelectrode capacitance of the tube. The two sources of feedback, one through C_n and the other through C_{gp}, are equal but opposite in phase. Therefore, they tend to cancel each other, and there is no longer the danger of oscillation.

It is interesting to note in Figs. 3 and 4 that a fixed-bias supply—E_{cc} is used in place of the other bias arrangements shown in Figs. 1 and 2. Just remember that the method of bias used depends entirely on the application and may be fixed-source bias, grid leak bias, or cathode bias. With the fixed-bias arrangement an r-f choke, (RFC), is used to keep signal currents out of the supply source, while the bypass capacitor provides a ground return to the cathode for these same signal currents. Since the same power supplies usually furnish voltages to several different stages, any r-f currents entering the power supply might feed back to preceding stages and cause oscillations.

WHAT HAVE YOU LEARNED?

1. In order to achieve neutralization, it is necessary that the two feedback energies be (a) __________ but of opposite (b) __________. The required change in polarity between the voltage fed back through C_{gp} and that fed back through C_n is achieved by (c) __________ the coil in the plate tank circuit and returning this tap to (d) __________ through a bypass capacitor. The amount of energy fed back through C_n is controlled by making C_n (e) __________.

2. If you replaced the tube in a plate-neutralized r-f amplifier similar to that shown in Fig. 3, what else must be done before putting the transmitter back into operation?

ANSWERS

1. (a) Equal; (b) phase; (c) tapping; (d) ground; (e) variable
2. The neutralizing capacitor C_n must be adjusted for complete neutralization because the grid-plate capacitance will vary from tube to tube.

5 GRID NEUTRALIZATION . . . A tapped grid tank circuit may also be used for neutralization, as shown in Fig. 4. C_n is adjusted so that equal voltages feed back to the grid circuit through C_n and C_{pg}. The two feedback signals are in phase, but are applied to opposite ends of

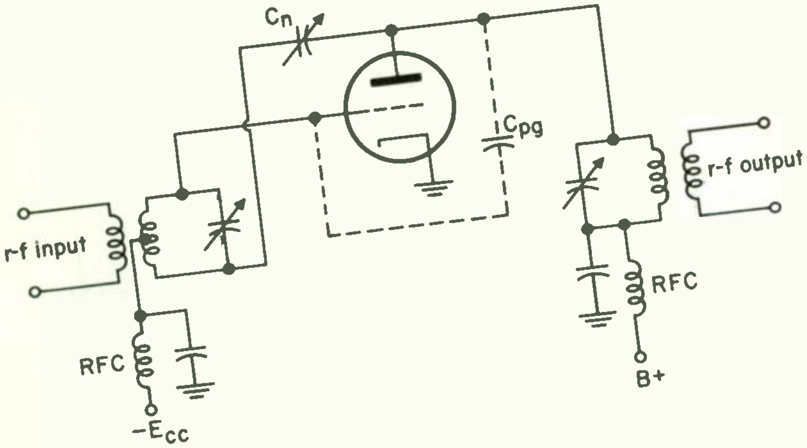

Fig. 4 Grid (Rice) neutralization.

the center-tapped grid-tank circuit. Because the ends of the oscillating grid tank are 180° out of phase with each other, in phase signals applied to opposite ends cancel each other. In other words the signal that feeds back to the grid circuit through the tube's interelectrode capacitance C_{pg} is cancelled by the signal fed back through C_n.

6 PUSH-PULL NEUTRALIZATION . . . To obtain more than twice as much output as that of a single-ended stage, two identical tubes are often connected in push-pull as shown in Fig. 5. The push-pull circuit is more easily balanced than a single-ended stage is. The most common method, illustrated in Fig. 5, is called *cross neutralization*; it consists only of connecting two neutralizing capacitors from the plate of each stage to the grid of the other. Since the signals on the plates of a push-pull stage are 180° out of phase with each other, neutralizing signals obtained in this way are 180° out of phase with the feedback voltage through the interelectrode capacitance.

The tuning capacitors in the plate and grid circuits of Fig. 5 are of the *split-stator* type. That is, the assembly is made up of two identical variable capacitors whose movable, or rotor, plates are both mounted to a common rotatable shaft. The rotor plates of both capacitors are tied together and this common connection is grounded. In this way, both capacitors are varied by moving the common rotor shaft. The split-stator capacitor has an advantage over the single variable capacitor in that it is safer for the operator to adjust because the high voltage is kept off the adjustable plate. In addition, the capacitors offer a low impedance to ground for harmonics, and so the harmonic output of the amplifier is reduced.

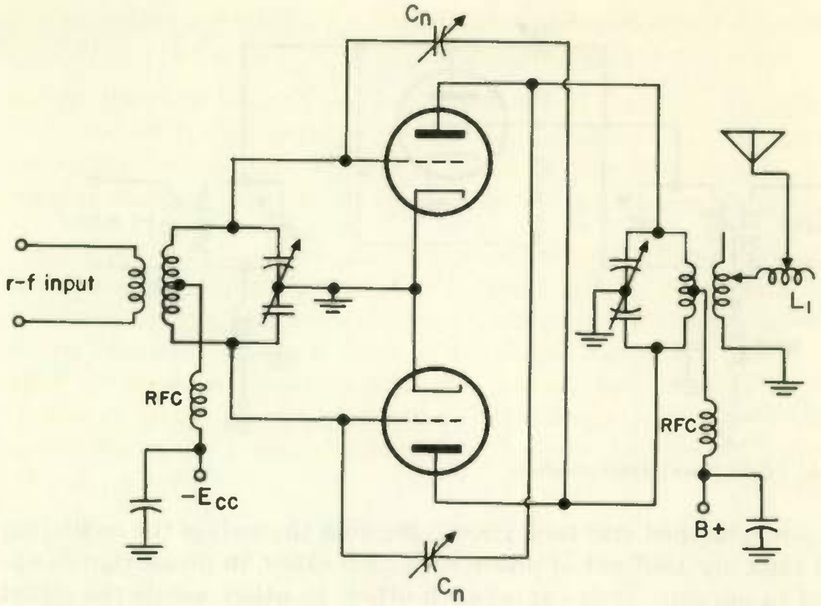

Fig. 5 Push-pull neutralized r-f amplifier with coupling to Marconi antenna. Coil L_1 is for resonating the antenna, the tap position being adjustable.

7 INDUCTANCE NEUTRALIZATION

. . . In the neutralizing arrangements shown thus far we have made use of a neutralizing capacitor C_n. We may also accomplish neutralization by connecting an inductor between plate and grid as shown in Fig. 6. The capacitor placed in

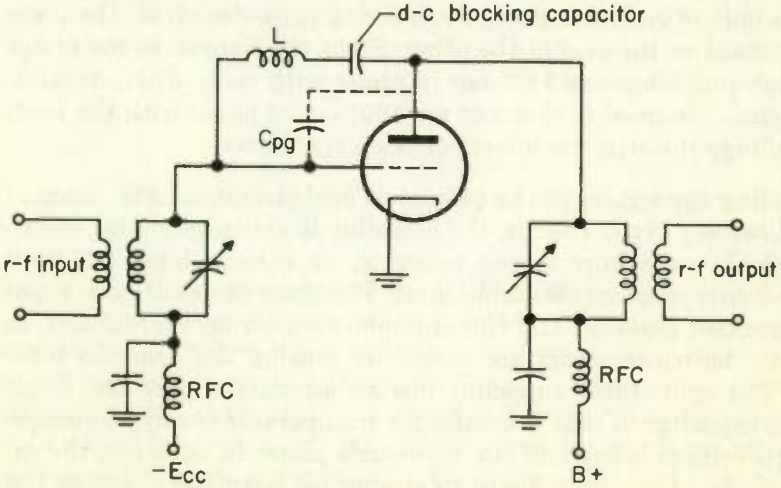

Fig. 6 Inductance (shunt) neutralization.

series with the inductor is used only as a d-c blocking capacitor and has no effect on the neutralizing action.

All that we are doing in Fig. 6 is forming a parallel resonant circuit in which C_{pg} acts as the capacitance in parallel with inductor L. At resonance, the two reactances cancel and the plate-to-grid path then offers an extremely high impedance to the flow of feedback energy.

Because the lead length in the neutralizing circuit is practically negligible, the circuit of Fig. 6 is well suited to ultrahigh frequency circuits in which other methods of neutralization may prove unsatisfactory. The same arrangement can be used in push-pull stages with a separate inductor and blocking capacitor connected between the plate and grid of each tube. Another advantage of this circuit is that it permits the use of single-ended tank circuits with single-ended amplifiers.

WHAT HAVE YOU LEARNED?

1. To achieve neutralization in a push-pull stage, both the grid and plate tank coils are (a) ____________ to obtain the correct polarities of (b) ______________ voltages. Then a neutralizing capacitor is connected from the (c) __________ of each stage to the (d) _________ of the other.

2. You are operating a transmitter in which the r-f stages use shunt neutralization. In one such stage, the capacitor in series with the shunt coil shorts. The plate current meter would indicate a (a) *(rise) (fall)* since the (b) __________ applied to the tube would be overcome by the B+ applied to the (c) __________.

ANSWERS

1. (a) Tapped; (b) feedback; (c) grid (or plate); (d) plate (or grid)
2. (a) Rise; (b) bias; (c) grid

8 NEUTRALIZING PROCEDURE . . . Either a neon bulb, a flashlight lamp or an r-f ammeter connected to the ends of a loop of wire may be used as an indicator when neutralizing low-power r-f amplifiers. *The plate-voltage lead is opened during the neutralization process to completely remove d-c potential.* Normal r-f excitation (input) is then applied to the stage, the neutralizing indicator is coupled to the plate coil, and the plate and grid tuning capacitors are set to resonance, as shown in Fig. 7. The neutralizing capacitor C_n is then adjusted until

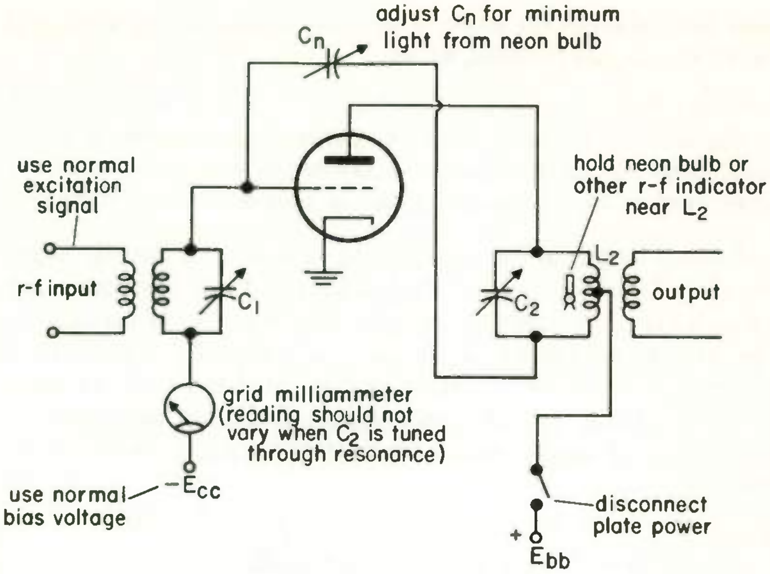

Fig. 7 **Neutralizing an r-f amplifier stage.**

the r-f indicator gives a minimum indication in both tank circuits. For the neon lamp and the flashlight lamp this is the point of least brilliance. When a symmetrical push-pull stage is being neutralized, both neutralizing capacitors are adjusted simultaneously and to approximately the same value of capacitance.

With the plate voltage removed, the tube does not amplify. The only way the r-f input in Fig. 7 can reach the plate tank circuit is through the interelectrode capacitance of the tube. With perfect neutralization there will be no r-f in the tank circuit of Fig. 7, since the entrance path has been balanced out (neutralized).

As a final check, a d-c milliammeter is connected in series with the grid bias circuit. When the plate is tuned through resonance (still with no voltage applied), there should be no movement on the grid meter.

In a completely neutralized amplifier, with plate voltage applied and with normal loading, maximum grid current and minimum plate current should both occur at the same point of tuning on the plate tuning capacitor. As the plate circuit is detuned slightly to each side of resonance, the grid current should decrease by equal amounts on each side of maximum without any sudden jumps. This is a very accurate way to determine neutralization when the load represents a resistive impedance at the operating frequency.

At frequencies above 15 or 20 mc it may also be necessary to neutralize tetrode (screen grid) tubes, although some special types operate satisfactorily without neutralization all the way up to about 100 mc.

In any event, if neutralization should become necessary, it is accomplished in much the same manner as already described for triodes. At the higher frequencies, however, the required value for C_n may be considerably less than the minimum value of a commercially available neutralizing capacitor. A sort of "gimmick" may then be used to provide the feedback. One end of a conductor is simply connected to the grid and the other end is positioned near the bottom of the tank circuit to provide the required capacitive coupling.

When a stage cannot be completely neutralized, the difficulty can usually be traced to one or more of the following causes:

1. Filament leads are not bypassed to the common ground of that particular stage.

2. Ground lead from the rotor connection of a split-stator capacitor to filament is open or too long.

3. Neutralizing capacitors in the field of excessive r-f from a tuning coil.

4. Electromagnetic coupling between grid and plate coils.

5. Insufficient shielding or spacing between stages, or between grid and plate circuits in very compact transmitters.

6. Shielding placed so close to plate coils that there are induced currents in the shields.

WHAT HAVE YOU LEARNED?

1. Three indicators that may be used when neutralizing low-power r-f amplifiers are (a) ____________, (b) ____________, and (c) ____________.

2. With plate voltage disconnected, a d-c milliammeter connected in series with the grid bias circuit (a) *(should) (should not)* indicate a change when the plate tank of a neutralized r-f amplifier is tuned through (b) ____________.

3. In working on a transmitter that was recently neutralized you

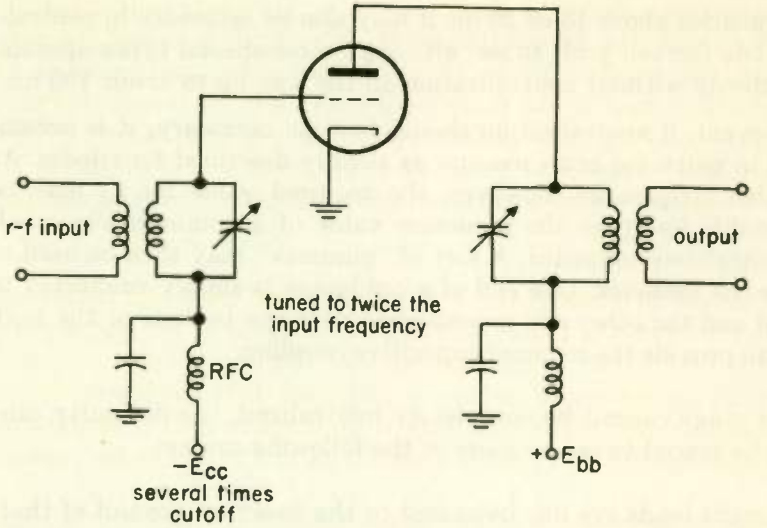

Fig. 8 **A frequency doubler circuit. The circuit is distinguished by the high negative bias used and by the plate tank circuit being tuned to twice the frequency of the input tank.**

notice that maximum grid current occurs at one frequency reading and that minimum plate current occurs at a slightly different reading. What does this indicate? ____________________.

ANSWERS

1. (a) Neon lamp; (b) flashlight lamp and a loop of wire
   (c) r-f ammeter (answers may appear in any order)
2. (a) Should not; (b) resonance
3. Incomplete neutralization

FREQUENCY MULTIPLIERS

9 OPERATING R-F AMPLIFIERS AS FREQUENCY MULTIPLIERS . . . The prime signal source in a transmitter is an oscillator that produces an r-f signal of constant amplitude at its output. However, the frequency of the oscillator signal is often lower than the frequency desired for transmission, and r-f amplifiers operating as *multipliers* are required to raise the frequency. *Frequency* multipliers operate on exact multiples of the excitation frequency. When the output of the multiplier is 2 times the frequency of the input excitation, the multiplier is called a *doubler;* when the output is 3 times the frequency of the input excitation the multiplier is called a *tripler;* and so on.

A simple doubler circuit is shown in Fig. 8. The plate tank circuit is tuned to twice the input frequency. The grid is biased to several times cutoff value. When a high-excitation voltage is applied to the grid, the output in the plate circuit is rich in harmonics because of the heavy biasing. The plate tank circuit is energized by the second-harmonic component to which it is tuned, and it produces an output frequency which is equal to twice the input frequency of the stage.

Neutralization is unnecessary in an r-f amplifier used as a frequency multiplier because the plate is tuned to a harmonic of the signal present in the grid circuit. The impedance of the grid-driving circuit is very low at the harmonic frequency, and thus there is little tendency for oscillation. Any signal fed back from plate to grid is shorted to ground through the low grid impedance to the feedback frequency.

Frequency triplers and even quadruplers may be formed by increasing the grid bias to produce stronger harmonics of the desired order and by tuning the plate tank circuit to resonate at the desired harmonic.

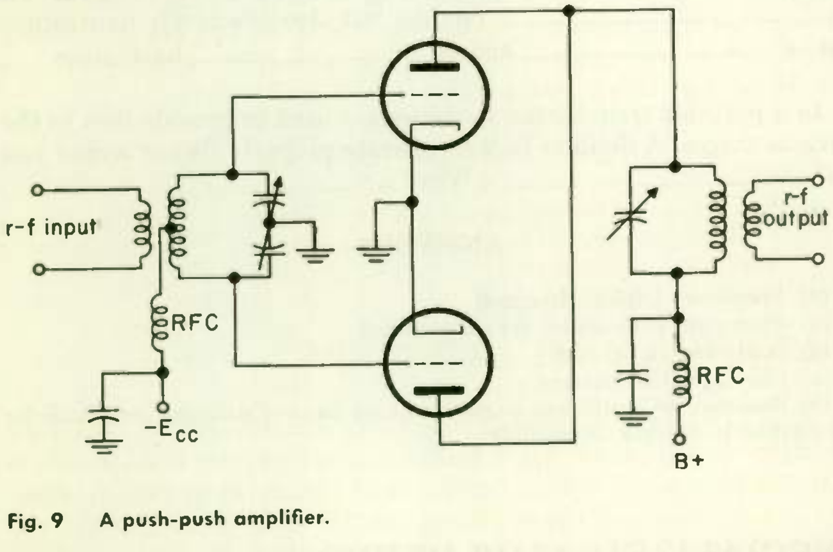

Fig. 9 A push-push amplifier.

Two tubes in parallel give twice the power output of a single-tube doubler. However, by driving the tubes out of phase (push-pull) instead of in phase (parallel), we can make them work one at a time and effectively "fill in" the missing pulses. Such a circuit, shown in Fig. 9, is called a *push-push doubler*. Note that the plates are connected in parallel and the grids in push-pull. Push-push circuits can be used only for multipliers operating on even harmonics (second or fourth, but not third).

The push-push circuit not only provides double the output of a single-ended doubler but also effectively neutralizes the fundamental and all odd harmonics. This is most helpful in minimizing spurious emissions.

WHAT HAVE YOU LEARNED?

1. The input excitation frequency to an r-f amplifier is 5 mc. The output frequency is 15 mc. This indicates that the r-f amplifier is operating as a (a) ________ ________. For operation to be successful, bias must be equal to several times (b) ________.

2. In the push-push circuit, the grids are connected in (a) ________ ________, while the plates are connected in (b) ________. The push-push circuit not only provides double the power output of a (c) ________ ________ doubler but also effectively neutralizes the (d) ________ and all (e) ________ harmonics.

3. In a portable transmitter, batteries are used to provide bias to the various stages. A doubler fails to operate properly. What would you do? (a) ________. Why? (b) ________.

ANSWERS

1. (a) Frequency tripler; (b) cutoff
2. (a) Push-pull; (b) parallel; (c) single-ended
   (d) fundamental; (e) odd
3. (a) Check the bias battery.
   (b) Bias may be insufficient to produce harmonics of sufficient amplitude for the doubler to operate successfully.

SPECIALIZED AMPLIFIERS

10 THE CATHODE FOLLOWER AMPLIFIER . . . In the circuit of Fig. 10 the output load is connected across the cathode resistor R_k, and no capacitor is used to bypass this resistor. Thus, output power is taken from the cathode circuit instead of from the plate circuit as

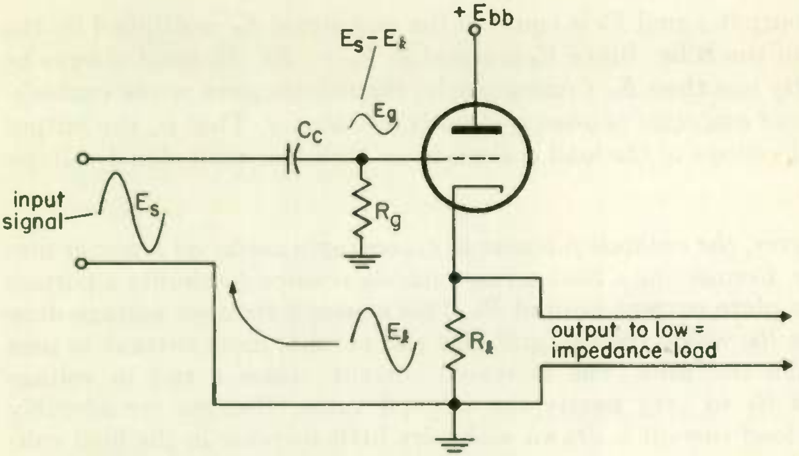

Fig. 10 A cathode follower amplifier.

in the usual arrangement. Notice also that there is no impedance in the plate circuit. This amplifier is called a *cathode follower,* because the output signal is in phase with, and therefore follows, the input signal.

Because R_k is not bypassed, the a-c component of the plate current flows through R_k, developing the signal voltage E_k across it. The signal E_g applied between grid and cathode consists of E_s and E_k in series. Although E_s and E_k are in phase with respect to the output load across R_k, they are out of phase with respect to each other. Consequently, E_g is equal to $E_s - E_k$, and is therefore much smaller than either E_s or E_k.

To see why E_s is out of phase with E_k, draw a battery in place of the input signal, with positive terminal connecting to top input lead and negative terminal to the lower (grounded) input lead. This battery represents that part of the input cycle when the upper input lead is positive with respect to the bottom. During this same part of the cycle, the polarity of E_k will be such that the top of R_k is positive and the bottom negative for the a-c component of the plate current. Hence, draw a battery in place of E_k with positive terminal connected to top of R_k and negative to the bottom. Now note that the two batteries you have drawn are connected series bucking (negative terminal connected to negative terminal), so that the total voltage is the difference between the two.

The output signal E_k is equal to the grid signal E_g multiplied by the gain of the tube. Since E_g is equal to $E_s - E_k$, E_k must always be slightly less than E_s. Consequently, *the voltage gain of the cathode-follower amplifier is always slightly less than 1.* That is, the output signal voltage to the load is always less than the input signal voltage.

However, *the cathode follower is exceedingly useful as a power amplifier.* Connecting a load across cathode resistor R_k shunts a portion of the plate current around R_k. This causes a reduced voltage drop across R_k, which reduces grid bias and permits more current to pass through the tube. The increased current causes a rise in voltage across R_k to very nearly the original value. Because considerably more load current is drawn with very little increase in the load voltage, the output impedance of the cathode follower is small, and it can supply considerable power directly to a low-impedance load.

The cathode follower is widely used where it is desirable to have an amplifier with high input impedance and low output impedance. It can be connected across a high-impedance circuit without drawing appreciable power, and therefore without excessively loading the circuit. On the other hand, its output can be connected to a low-impedance load—such as a coaxial cable—to deliver a relatively large amount of power to the load.

When the input signal to a cathode-follower circuit does not contain a d-c component, capacitor C_c, and consequently R_g, can be eliminated. The advantage to this is to provide the stage with a uniform power gain down to very low frequencies. Without the coupling capacitor the circuit can pass frequencies from about 10 cps to 4 mc or higher without appreciable distortion. For this reason cathode followers are often used in oscilloscopes and vacuum-tube voltmeters, which must be used to make measurements over a wide range of frequencies.

In summary, the cathode follower provides the following characteristics:

1. Excellent power amplification
2. High input impedance
3. Low output impedance
4. Excellent frequency response

5. Voltage amplification that approaches but never reaches unity
6. An output which is in phase with the input

WHAT HAVE YOU LEARNED?

1. In the cathode follower the feedback is (a) *(regenerative) (degenerative)*. Since there is a 100 per cent feedback (total output voltage is subtracted from input voltage) the amplification (b) _____________ but never reaches (c) __________.

2. If you were servicing a cathode follower amplifier and found the grid of the follower slightly positive with respect to cathode, would you consider this normal? (a) ________. If not, what difficulty would you suspect? _________________________.

ANSWERS

1. (a) Degenerative; (b) approaches; (c) 1, or unity
2. (a) No . . . The grid should be negative with respect to the cathode.
(b) A leaking coupling capacitor C_c permitting d-c from the preceding stage to reach the grid of the follower.

11 THE GROUNDED-GRID AMPLIFIER . . . An r-f amplifier that is useful at very high frequencies is the grounded-grid amplifier shown in Fig. 11. In this circuit the grid acts as an electrostatic shield between the cathode and plate in much the same manner as the screen grid of a pentode acts. Thus, the need for neutralization is eliminated. The triode has an advantage over the pentode at very high frequencies in that it produces less noise.

Since the grid is grounded, the input voltage must be applied between cathode and ground. For the circuit shown, the input signal is developed across the high-impedance resonant circuit composed of L_2 and C_2 between cathode and ground. Bias is developed across resistor R_1, and capacitor C_3 serves as a low-resistance r-f signal path to ground.

While it appears that the signal is applied to the cathode circuit only, it actually determines the potential difference between cathode and grid. Assume, for instance, that a positive alteration appears across the cathode circuit. This makes the cathode more positive with respect to ground potential and, because the grid is grounded, makes the grid more negative with respect to the cathode.

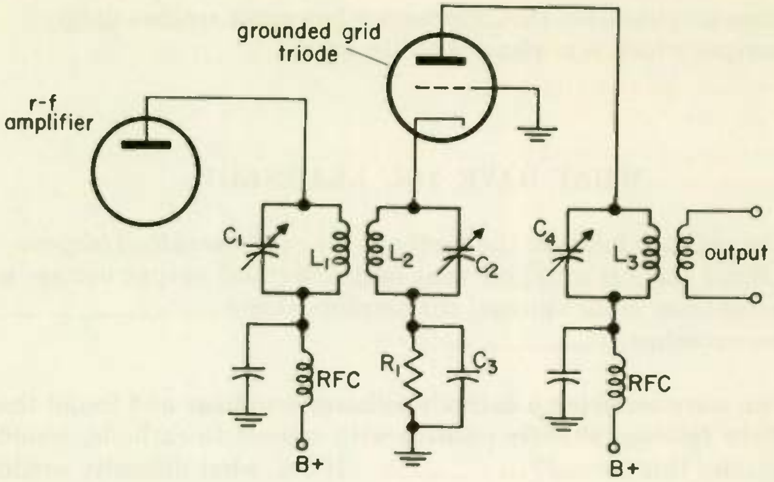

Fig. 11 A grounded-grid amplifier.

Thus, current flow through the tube decreases and plate voltage rises. A negative-going alternation at the cathode circuit decreases the cathode potential with respect to ground and thus lowers grid bias. Plate current then increases and plate voltage drops, developing a negative-going signal at the output. This shows that in the grounded grid amplifier the input and output signals are in phase.

The voltage gain of a grounded-grid amplifier is slightly more than that of a conventional grounded-cathode amplifier. This is because the a-c signal developed across the cathode load adds to the signal voltage developed across the tube in producing the total output signal voltage.

Since in the grounded-grid amplifier, the signal is induced in series with the cathode, all of the plate signal current must be supplied by the driving source. Or, in other words, the input impedance of the grounded-grid amplifier is low. This means that the driving source must be capable of delivering power. A cathode-follower circuit is often used to drive the grounded-grid circuit, because the output impedance of the cathode follower is low and it can supply the required power to the input of the grounded-grid circuit.

WHAT HAVE YOU LEARNED?

1. A grounded-grid amplifier eliminates the need for (a) __________ as in a conventional grounded-cathode circuit, since the grounded

grid acts as an (b) ________________ shield in much the same manner that the (c) __________ grid of a tetrode or pentode type of tube acts. In the grounded-grid amplifier, the output signal is (d) *(in phase) (out of phase)* with the input signal.

2. A certain r-f amplifier application requires a very high signal-to-noise ratio at operating frequencies between 30 and 50 mc. A (a) ____________ - __________ amplifier using a (b) ___________ -type tube would probably prove satisfactory for this application. This type of tube is used because of its (c) _______ _________ .

ANSWERS

1. (a) Neutralization; (b) electrostatic; (c) screen; (d) in phase
2. (a) Grounded-grid; (b) triode; (c) low noise

TRANSISTOR R-F AMPLIFIERS

Although class A voltage and class B power transistor r-f amplifiers are common, vacuum tubes are usually employed for the high-power stages in which class C operation is used.

12 NEUTRALIZING TRANSISTOR R-F AMPLIFIERS . . . The need for neutralization in transistor r-f amplifiers is usually much greater (particularly in older equipment) than in corresponding vacuum-tube circuits, owing to higher internal capacitances. Without neutralization, it is found that tuning interaction between stages of a multistage tuned transistor amplifier may be so severe that synchronous tuning is difficult to achieve. Furthermore, it is generally possible to cause a stage to oscillate by mistuning. Because of improved design techniques, the newer circuits more and more do not require neutralization.

A typical transistor r-f amplifier stage is shown in Fig. 12. Resistor R_1 sets the base bias current to the correct value. Capacitor C_1 makes it possible to apply the incoming signal between base and emitter. The purpose of R_2 is to stabilize the base bias so it will not vary widely with temperature changes. C_2 bypasses the collector-emitter signal current so that it is not attenuated by R_2. The tank circuit C_3L_3 forms the collector resonant circuit, which is tuned by adjusting the magnetic core. L_4 couples to this tuned circuit to feed the following stage.

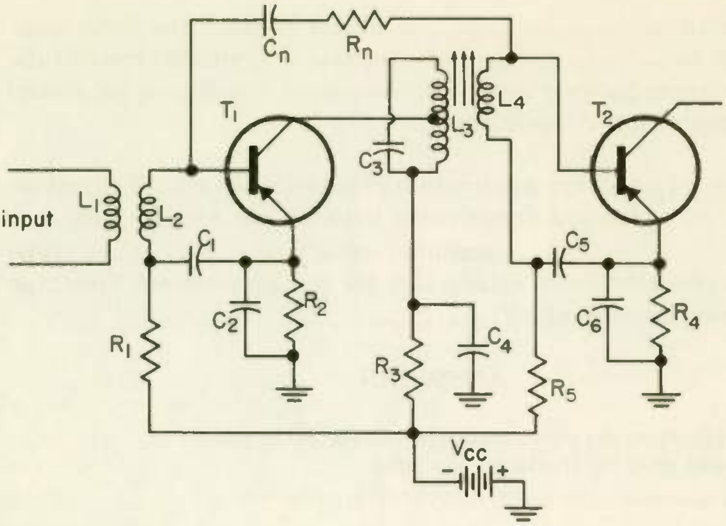

Fig. 12 A typical r-f transistor amplifier stage with neutralization.

Note that the collector, instead of being connected to the top of C_3L_3, is connected to a tap on L_3. This practice is usual with transistor r-f stages. It provides better impedance matching, better selectivity, and more uniform operation for different battery conditions than if the collector were connected to the top of the tank circuit.

Capacitor C_n with resistor R_n forms the feedback circuit for neutralization. The signal in the transformer secondary L_4 is used as the source of feedback voltage, the neutralizing signal being fed back to the base of T_1. The neutralizing connection must be to the right terminal of L_4 to obtain the correct feedback phase. Further adjustment of the phase of the neutralization signal is obtained by R_n, which in conjunction with C_n produces a phase shift. R_n is not required for vacuum-tube neutralization circuits, and it is not always found in transistor neutralization circuits.

Resistor R_3 adjusts collector voltage to the correct value and also keeps the a-c signal out of the power supply. The signal bypasses through C_4.

13 SPECIALIZED TRANSISTOR R-F AMPLIFIERS . . . The transistor counterpart of the cathode follower is the *grounded-collector* circuit shown in Fig. 13, sometimes called the emitter follower circuit. Its characteristics are similar to those for the cathode follower circuit.

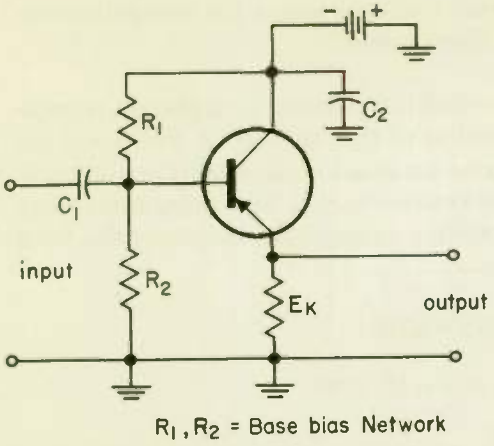

Fig. 13 The grounded-collector, or emitter follower, circuit.

It is called a grounded-collector circuit because C_2 places the collector at a-c ground.

The transistor version of the grounded-grid amplifier is the *grounded-base* circuit shown in Fig. 14. In the grounded-base amplifier there is no signal inversion between input and output.

WHAT HAVE YOU LEARNED?

1. Transistor r-f amplifiers generally require (a) ________________. Also in transistor r-f amplifiers, a slight mistuning may cause a stage to (b) ________________. In the circuit of Fig. 12 component (c) ________

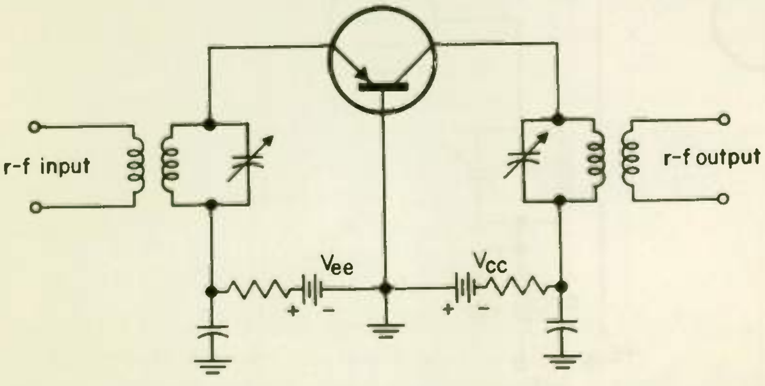

Fig. 14 A grounded-base circuit, the transistor counterpart of grounded-grid amplifier.

is used to help obtain the correct feedback phase for neutralization. This component (d) *(is) (is not)* always used.

2. In working on a receiver you find it necessary to replace a transistor in an r-f amplifier circuit similar to that of Fig. 12. You must use another type of transistor because an exact replacement is not available. After you install the new transistor you find some instability (indicated by howls) over the tuning range. This indicates the need for readjustment of the ________________.

ANSWERS

1. (a) Neutralization; (b) oscillate; (c) R_n; (d) is not
2. Neutralization

R-F AMPLIFIER COUPLING METHODS

14 TRANSFORMER AND CAPACITIVE COUPLING . . . Transformer coupling between r-f stages may be either single tuned as in Fig. 15, or doubled tuned as in Fig. 17. Double tuning gives better versatility in obtaining the desired frequency response, as will be explained in Topic 15. The primary and secondary of the transformer (L_1 and L_2 in Fig. 15) are generally wound on a coil form with an air core, the two windings being separated the proper distance to give the desired amount of interaction between primary and secondary windings. Iron cored

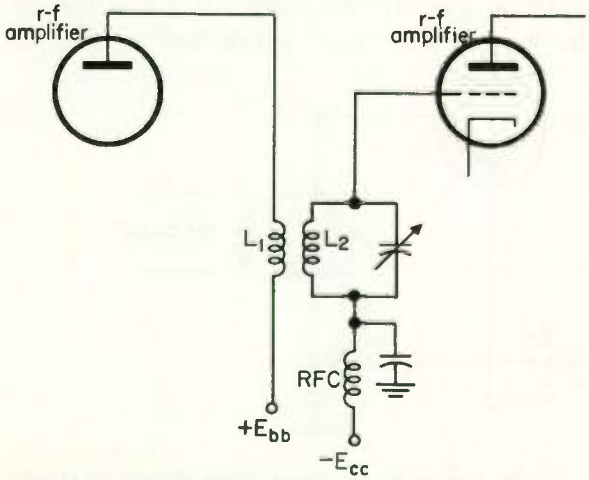

Fig. 15 Transformer coupling.

transformers, required at audio frequencies, are not used at radio frequencies so as to avoid eddy current and hysteresis losses, which are excessive at high frequencies. However, adjustable powdered iron (ferrite) slugs are often used in the coils for tuning purposes.

The performance of transformer coupled circuits is highly dependent upon the amount of coupling (interaction) between primary and secondary, designated by the term *coefficient of coupling,* and represented by the letter symbol k. The coefficient of coupling k must have a value between 0 and 1. If there is no interaction between two coils, then k is zero. This condition occurs when the coils are far enough apart that none of the lines of force set up by either of the coils thread the turns of the other coil.

The other extreme occurs when the one coil is wound on top of the other, so that all the magnetic flux associated with either coil threads the turns of the other coil. Maximum interaction between the two coils now occurs, and the coefficient of coupling is said to be 1. If only half the flux of one coil links the other, $k = 0.5$. A higher value of k, called tighter coupling, allows the changing magnetic field of one coil to induce more voltage in the other coil. Loose coupling, with a low value of k, has the opposite effect. A coefficient of coupling of only 0.05 with an air-core r-f transformer is considered high, and therefore "close" coupling, while for loose coupling the value of k may be only a few thousandths.

Instead of transformer coupling, capacitor coupling, shown in Fig. 16, is an alternate method of coupling r-f stages. With this method the coils of the two tuned circuits are separated sufficiently that there is

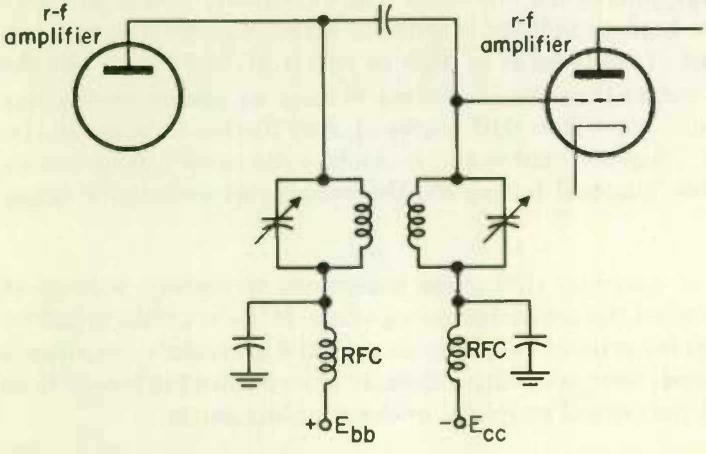

Fig. 16 **Complex (capacitive) coupling.**

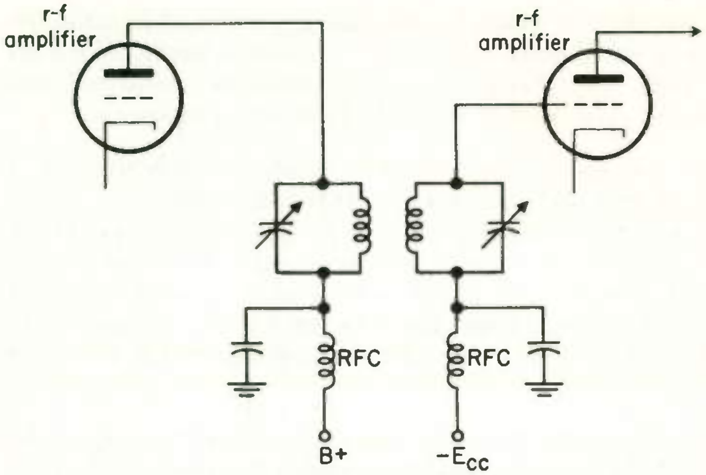

Fig. 17 **Coupling between double-tuned stages.**

no coupling between them. The transfer of energy from the first stage to the second is entirely by means of the capacitor.

15 COUPLING BETWEEN DOUBLE-TUNED STAGES . . . A double-tuned r-f voltage amplifier is shown in Fig. 17. The degree of coupling between primary and secondary tank circuits determines the amplitude of the signal voltage to the grid of the second stage, and also determines the sharpness of tuning.

Obviously if the degree of coupling is low enough, only a small voltage is induced into the secondary (curve *a* of Fig. 18), so that the overall voltage gain of the circuit of Fig. 17 is poor. You might suppose that the highest voltage is induced across the secondary when the coefficient of coupling is as high as practical, but this is not the case. Fig. 18 shows that the secondary voltage at resonance reaches its highest value when $k = 0.01$ (curve *c*). Any further increase in the coefficient of coupling causes the secondary frequency response to become double humped (curve *d*), the voltage at resonance being reduced.

The degree of coupling that gives maximum secondary voltage at resonance is called the *critical coupling* value. If the coupling is tighter than required for critical coupling, so that the secondary response is double humped, *over coupling* exists. If the coupling is looser than that required for critical coupling, *under coupling* exists.

Note in Fig. 18 that the looser the coupling the sharper the tuning.

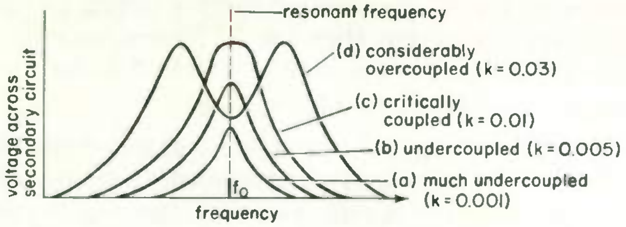

Fig. 18 How the secondary signal voltage in the circuit of Fig. 17 varies with the degree of coupling between the two tank circuits. (Curves assume that primary and secondary tank circuits are tuned to the same frequency, f_0.)

The much undercoupled curve of *a* has a relatively sharp tip at the top, which shows that the secondary voltage falls off very rapidly when the frequency departs from the exact resonant frequency. The critically coupled curve of *c* has a flat top, which shows that signal frequencies near resonant will be amplified equally as well as the resonant frequency. This flat top is often a useful characteristic, since if the tuning is too sharp, desired signal frequencies on each side of the resonant frequency may be lost.

To see why the curves are shaped as shown in Fig. 18, remember that the energy exciting the secondary tank circuit comes from the primary tank circuit. This transfer of energy to the secondary saps the primary tank circuit just like adding additional resistance in the primary would. In other words, the *Q* of the primary tank circuit is reduced when the energy transfer from it to the secondary is increased. Lower *Q* means broader tuning and tank circuit oscillations of lower amplitude. For coupling looser than the critical value, the secondary does not load down the primary enough to seriously affect the performance of the primary. For coupling tighter than the critical value, the primary oscillations are so weakened that the voltage the primary is able to induce into the secondary is reduced at the resonant frequency. For points a short distance off resonance, the secondary (then out of tune) takes less energy from the primary, and thus the secondary voltage increases, giving the double hump of Fig. 18 *d*. In over coupled circuits such as this the primary oscillations are strong for frequencies slightly off resonance because the secondary reflects an *L* or *C* value (depending upon whether the frequency is above or below resonance) into the primary that brings the primary nearly back into resonance.

1. In the circuit of Fig. 17, you can get sharper tuning by moving the tank circuit inductors so that they are (a) *(closer together) (further apart).* You can get high voltage gain and a often desired flat top on the response curve by adjusting the coupling to its (b) ________ value.

2. You are aligning a section of a radio receiver called the i-f strip, in which double-tuned r-f amplifiers are employed. Coupling is varied by tuning a special form of iron slug. You are observing the resonance curve on your oscilloscope. As you turn the slug counterclockwise, you notice that the pattern changes from a single hump to a double hump. Are you increasing or decreasing the coupling? ________

ANSWERS

1. (a) Further apart; (b) critical.
2. Increasing... You have reached the point of critical coupling after which double humps appear. With overcoupling the humps will spread farther apart.

16 LINK COUPLING... Link coupling, as shown in Fig. 19, is a method of transferring energy from one r-f circuit to another when the two circuits are separated too far from each other for sufficient energy transfer by electromagnetic or electrostatic coupling. The link consists essentially of a pair of wires or conductors of sufficient length to reach between the two elements that are to be coupled together, and the link is terminated at each end by a coil of very few turns. Each coil is inductively coupled to the circuits being connected. In effect, link coupling acts like a step-down transformer at the output of one circuit and a step-up transformer at the input of the other. The link

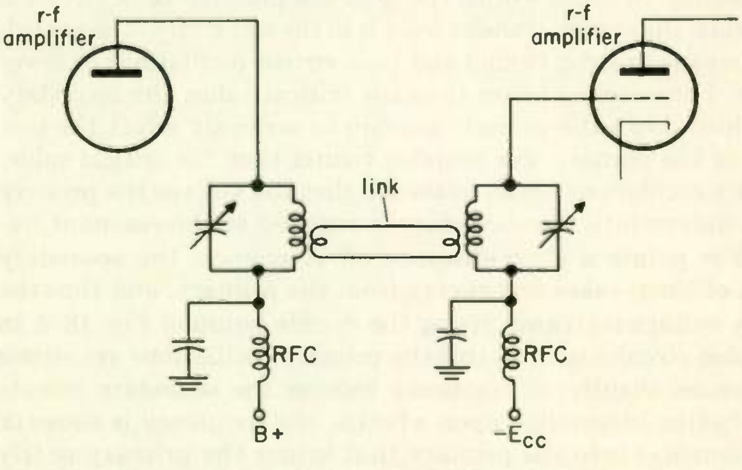

Fig. 19 Link coupling between two r-f amplifier stages.

coupling arrangement between two r-f amplifier stages shown in Fig. 19 is a typical one.

Link coupling is used for coupling between the r-f stages of a transmitter, for coupling an antenna tank to the final r-f power amplifier, or for any other applications in which it is desired to couple two r-f circuits together but in which it is mechanically inconvenient to locate the units sufficiently close together to permit another form of coupling.

17 COUPLING TO AN ANTENNA

... In all types of transmitters, the output circuit must be so designed that only the desired signal is fed to the antenna and radiated into space.

Harmonics are always present in the output of the final r-f stage, and they must be suppressed because the radiation of such signals may cause interference with another service. In short, keeping the harmonics from reaching the antenna is usually just as important as getting the fundamental to the antenna.

One form of antenna-coupling circuit, shown in Fig. 20 and called π (pi) coupling, reduces the harmonic output considerably. This arrangement is simply a form of low-pass filter in which capacitors C_2 and C_3 present a very low impedance path to ground for harmonic energy. The r-f choke RFC_2 is a safety device which protects the circuit in the event capacitor C_1 shorts. The B+ then follows the low-resistance path to ground through the choke instead of making the antenna line "hot." The resulting high current blows a fuse in the B+ supply line.

Another circuit to prevent the radiation of harmonics uses the so-called Faraday screen, as shown in Fig. 21. The Faraday screen consists of a number of wires fastened together at one end and open at the other to form a fork. The ends of the wires which are connected

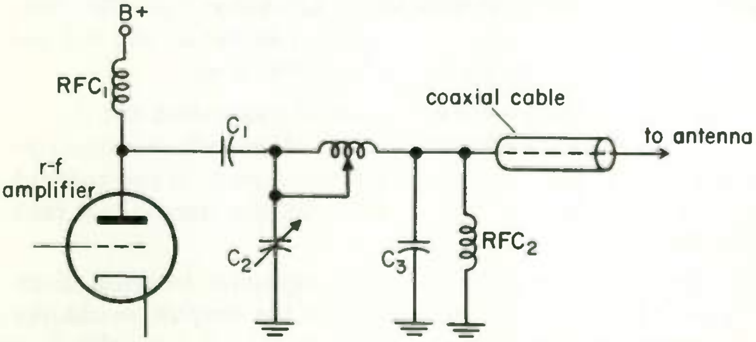

Fig. 20 A π-coupled network.

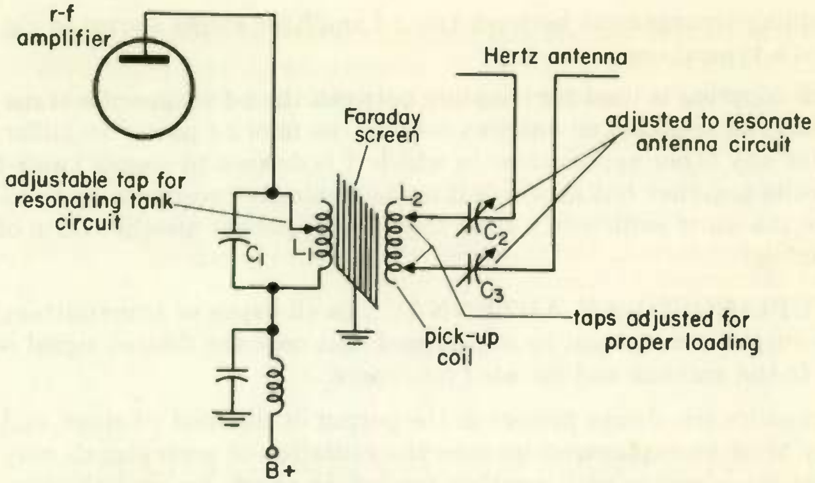

Fig. 21 **Method of coupling a single-ended final stage to a Hertz antenna. The Faraday screen reduces harmonic radiation.**

together are grounded. The Faraday screen prevents capacitive coupling between L_1 and the pick-up coil just as the screen grid in a vacuum tube prevents capacitive coupling between the control grid and the plate.

Tank circuits can be adjusted to resonance either by varying *L* or by varying *C*. In the circuit of Fig. 21 the coil L_1 is so constructed that the tap can be attached to any turn. The coil can thus be adjusted until the tank circuit resonates, as indicated by the plate current being a minimum. When the inductance is variable, a fixed capacitor can be used in the tank circuit, a definite advantage in high-voltage circuits.

WHAT HAVE YOU LEARNED?

1. When it is desired to transfer r-f energy between widely separated circuits, (a) __________ coupling may be used to advantage. This form of coupling acts like a (b) ______________ transformer at one end and like a (c) ______________ transformer at the other end.

2. In transmitters, it is necessary to prevent the radiation of (a) __________________ that may interfere with some other radio service. One method of preventing the transmission of harmonics to the antenna is to place a (b) ______________ screen between the transmitter tank circuit and the (c) ____________ ____________.

3. In a π-coupling network, the d-c blocking capacitor becomes short-circuited. If the r-f choke were not present in the output, would any safety hazard exist for operating personnel? (a) __________. Why? (b) ____.

4. A transmitter you are constructing consists of several subchassis which are to be rack-mounted. To connect the various r-f sections to each other and to transfer the output to the antenna, you could use __________ coupling.

ANSWERS

1. (a) Link; (b) step-up (or step-down); (c) step-down (or step-up)
2. (a) Harmonics; (b) Faraday; (c) pick-up coil
3. (a) Yes; (b) B+ would be applied to the transmission line
4. Link

TROUBLESHOOTING R-F AMPLIFIERS

With the understanding of r-f amplifiers you now have, troubleshooting procedures are for the most part straightforward. They require only that you make practical application of your theoretical knowledge. Never be in so much of a hurry to repair a circuit that you do not stop to reason out completely why the failure has occurred. All too frequently parts are replaced hurriedly and failure occurs again within in a very short time simply because the technician did not bother to reason out how a failure may affect components other than those obviously defective. Above all else, be thorough.

18 TUBE FAULTS . . . Of all components used in electronic equipment, vacuum tubes are most susceptible to failure. Let us briefly review some of the more common causes of tube troubles encountered in practice.

As you know, grid bias determines the amount of plate current flow. In class A, the bias is so adjusted that plate current flows at all times, regardless of the input signal. In class B, bias is so adjusted that plate current flows for about one-half of the input signal cycle; and in class C, for about one-fourth of the input signal cycle. The greatest amount of power is dissipated by the tube when operating class A, since efficiency is then the lowest. Now if for some reason a tube operates with less than the required bias, the average plate current increases, causing the plate to heat excessively and perhaps eventually destroying the tube.

Other faults that may cause overheating and possible destruction of a vacuum tube due to excessive plate current are:

1. Improper neutralization, which leads to oscillations.
2. Plate tank circuit not correctly tuned. Since the impedance of the parallel resonant tank circuit falls off rapidly on each side of resonance, improper tuning decreases impedance and causes an increase in plate current.
3. Defective tube element.
4. Improper operation of the cooling system in water or forced-air cooling systems of the type often used with high-power transmitters.
5. Excessive plate voltage.
6. Excessive loading.
7. Parasitic oscillations.

Parasitic oscillations are unintended and undesired self-sustaining oscillations that occur in power amplifier or oscillator circuits at a frequency different from the operating frequency. Parasitic oscillations occur because lead capacitances, lead inductances, shunt-fed chokes, etc., when taken together sometimes form unintended resonant circuits. These circuits may sap sufficient energy from the regular circuits to sustain oscillations unless preventive steps are taken. Parasitic oscillations tend to occur in almost every r-f amplifier handling a substantial amount of power. Such oscillations are considered at length in later lessons dealing with transmitters.

Sometimes the plate current of an r-f amplifier may be abnormally high and operation may be erratic. If a blue haze appears between the filament and plate, there is a good chance that the tube is "soft." This haze should not be confused with the bluish haze which appears on the inside surface of the glass envelope and is a result of the manufacturing process. A tube is said to be soft when it contains gas. That a tube contains gas happens occasionally during the manufacturing process as a result of incomplete evacuation, or it may occur simply because the tube has been permitted to lie on a shelf for an extended period of time.

In a transmitter there are several easily spotted indications of subnormal filament emission of a tube. The most common indications include:

1. The suspected tube draws less than normal plate current when used as a class A amplifier with normal bias.
2. The plate current does not swing up to its usual high value when the plate tank of the suspected tube is tuned off resonance.
3. A stage provides abnormally low power output.

4. It is difficult to obtain normal grid current in a class B or class C r-f amplifier.
5. Grid current, plate current, and output increase when the filament voltage is increased slightly.
6. Oscillations cannot be obtained or are weak when the tube is used in an oscillator stage.

Also in a transmitter, a variety of tube faults may be indicated by the following:

1. Unlit tube, indicating a burned-out filament.
2. Blue haze between the filament and plate and erratic operation, such as a red-hot plate or fluctuations in plate current, indicating a gassy tube.
3. Low plate current with tube voltage nearly normal, indicating low filament emission.
4. Abnormal grid current readings when adjustments are correct.

Finally, low plate current in a vacuum-tube amplifier may be caused by any of the following:

1. Excessive grid bias.
2. Subnormal filament emission.
3. Low plate or screen grid voltages.
4. Low filament voltages.
5. Open grid circuit.
6. Insufficient excitation voltage in a class B or class C amplifier.

Remember, for class B or C operation the amplitude of the excitation voltage must be appreciable to overcome the high bias and permit plate current to flow. If the excitation is lower than normal, the tube will conduct either for a shorter period of time or, perhaps, not at all.

19 DISTORTION IN CLASS B AMPLIFIERS . . . The common causes of distortion in class B r-f amplifiers have been discussed earlier in this lesson. They are reviewed briefly here to refresh your memory.

In a class B r-f amplifier, excitation of the proper amplitude must, of course, be supplied if the amplifier is to operate within acceptable distortion limits. Just remember that the amplifier must operate along the straight (linear) portion of its E_g-I_p characteristic curve.

When using push-pull class B stages, the tubes should be properly matched to ensure equal conduction through the output on alternate half-cycles. If, for any reason, the push-pull action is unbalanced, distortion will result.

The tank circuit must have a sufficiently high *Q*. If the *Q* of the tank circuit is too low, high power losses take place across the resistance and damping occurs during that part of the cycle when no current flows, with resulting distortion.

Finally, as with any class of amplifier, the proper load impedance must be used. Excessive loading, for example, will cause the tube to operate near the upper limit of its characteristic curve and draw excessive current. Insufficient loading will result in too little power being delivered to the load.

20 FAULTS IN R-F CHOKES . . . If the plate r-f choke, such as the one in Fig. 3, becomes open-circuited in either a series- or shunt-feed arrangement, the stage becomes inoperative because the plate voltage is removed.

In a parallel-fed amplifier, a short circuit of the r-f choke allows r-f energy to pass to ground through the power supply or the power supply filter capacitor, as in Fig. 22. Because no r-f energy is supplied to the plate tank circuit, no signal can reach the next stage.

In a series-fed amplifier, a short circuit of the r-f choke would not seriously affect the power output of the stage. It would, however, allow part of the r-f component of the plate current to flow through the power supply, from which it could possibly feed back to other parts

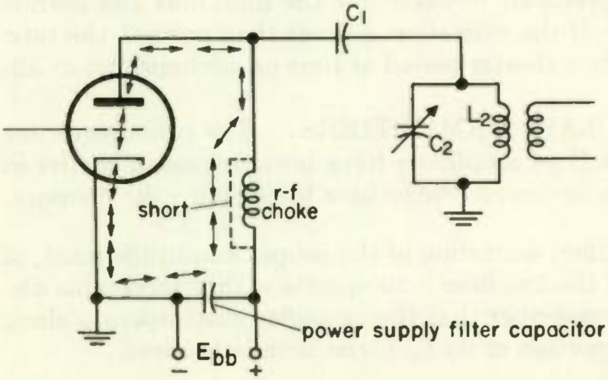

Fig. 22 If the r-f choke shorts, the a-c signal follows the path of the arrows and is not forced through C_1 to the tank circuit C_2L_2.

of the system operating from the same power supply. This would tend to cause unstable operation.

WHAT HAVE YOU LEARNED?

1. A shunt-fed r-f amplifier is driving (supplying input signal to) a class C r-f amplifier that uses grid leak bias with its cathode grounded. Suddenly, plate current in the class C stage increases sharply and the plate of the class C tube glows red hot and quickly burns out. The cause of tube burnout is the lack of (a) ________ on the class C stage due to the loss of (b) ________. In the shunt-fed stage, if all d-c voltages and currents are reasonably close to normal and input is present at its grid, the (c) ________ (use abbreviation) in the B+ line is probably (d) ________ and the (e) ________ (use abbreviation) signal is being grounded.

2. In a class C amplifier using a fixed-bias supply you notice that while tuning the stage, plate current rises only slightly on each side of resonance and normal grid current is difficult to obtain. What should you check first? ________.

ANSWERS

1. (a) Bias; (b) excitation; (c) RFC; (d) shorted; (e) r-f
2. Check the tube for low filament emission.

RADIO-FREQUENCY AMPLIFIERS

EXAMINATION

Circle the number of the correct answer for each question that follows. When you are finished, transfer the answers to the answer sheet by putting X's in the proper squares. When the graded answer sheet is returned to you, correct in this book any questions you may have missed. By doing so, you will have a record of the correct answers to all questions for review purposes.

1. The maximum voltage gain of a cathode follower is
   (1) Greater than unity
   (2) Much less than unity
   (3) Either greater or less than unity
   (4) Slightly less than unity

2. In a class C r-f amplifier insufficient excitation may be indicated by
   (1) Excessive grid current
   (2) Low plate current if the stages use grid leak bias
   (3) High plate current if the stage uses grid leak bias
   (4) High reading on an r-f indicator connected in the load circuit

3. Link coupling is used in r-f amplifiers
   (1) To prevent harmonic radiation by the antenna
   (2) To transmit r-f energy between two widely separated r-f stages
   (3) To provide coupling for a neutralizing indicator to the r-f tank circuit
   (4) Only when a stage is being operated as a frequency multiplier

4. Unity coupling means
   (1) Two coils are wound on the same form
   (2) All of the flux from one coil cuts across another coil
   (3) 100 per cent feedback as in a cathode follower
   (4) All frequencies but the harmonic are suppressed in the output of a transmitter to the antenna

5. The advantage of using a resistor in series with the cathode of a class C radio-frequency amplifier to provide bias is that
   (1) It acts as a safety device in the event fixed bias is removed or excitation ceases in a grid leak biased stage
   (2) It introduces a certain amount of degeneration since it is bypassed and therefore improves the output waveform
   (3) It provides a means of coupling a high-impedance source to a low-impedance load
   (4) It suppresses parasitic oscillations

6. In a frequency doubler stage
   (1) The bias is equal to cutoff and the frequency of the output signal is twice that of the input signal
   (2) The bias is adjusted to ensure operation over the linear portion of the tube's E_g-I_p curve
   (3) The bias is quite small to ensure production of harmonics
   (4) The bias is several times cutoff for rich harmonic content in the output and the plate tank is tuned to twice the frequency of the input

7. An r-f doubler stage is used to
   (1) Raise the amplitude of the output signal to twice the amplitude of the input signal
   (2) Double the r-f power output
   (3) Double the frequency of the input signal
   (4) Double the efficiency of the stage

8. What class of amplifier is appropriate for use as a radio-frequency doubler?
   (1) Class A
   (2) Class AB
   (3) Class B
   (4) Class C

9. A vacuum tube with a screen grid normally requires no neutralization when used as an r-f amplifier because
   (1) It is used only at low r-f frequencies
   (2) The screen acts as an electrostatic shield between the plate and grid circuits
   (3) The screen acts as an electromagnetic shield between the plate and grid circuits
   (4) It is always used as a doubler

10. Which of the following tube types normally requires neutralization when used as an r-f amplifier?
    (1) Heptode
    (2) Triode
    (3) Tetrode
    (4) Pentode

11. Why must some radio-frequency amplifiers be neutralized?
    (1) To prevent oscillation
    (2) To permit doubler operation
    (3) To permit the use of link coupling
    (4) To prevent degeneration

12. The principal advantage of a tetrode over a triode as a radio-frequency amplifier is that
    (1) The tetrode has lower interelectrode capacitances
    (2) The tetrode provides higher gain
    (3) The tetrode can dissipate more power
    (4) The tetrode may be operated as a "straight through" amplifier or as a doubler, while the triode cannot be operated as a doubler

13. Which one of the following indicators is *not* used for indication of neutralization?
    (1) A neon lamp
    (2) A flashlight bulb connected to a loop of wire
    (3) An r-f ammeter
    (4) An ohmmeter

14. When using grid leak bias only, the loss of r-f excitation to a class C amplifier would cause
    (1) Grid current to increase sharply
    (2) Plate current to decrease sharply
    (3) Oscillation
    (4) Plate current to increase sharply

15. A gassy tube may be indicated by
    (1) A blue haze between plate and filament
    (2) A blue haze on the side of the glass envelope
    (3) An orange haze between plate and filament
    (4) A multicolored haze in the center of the tube

16. An indication that a vacuum tube in a transmitter has subnormal filament emission would be
    (1) A red-hot plate
    (2) Excessive grid current in a class C stage
    (3) Lower than normal plate current in an r-f stage with proper potentials applied
    (4) A decrease in plate current when the filament voltage is increased

17. Low plate current in a vacuum-tube amplifier may be caused by
    (1) High screen voltage
    (2) Excessive drive to a class C stage
    (3) Improper neutralization
    (4) Excessive bias

18. In a properly neutralized r-f amplifier
    (1) Grid current should increase when the tank is tuned through resonance with B+ removed
    (2) Grid current should remain unchanged when the plate tank is tuned through resonance with B+ removed
    (3) Minimum grid current and maximum plate current should occur at the same setting of the plate-tuning capacitor with B+ applied
    (4) Grid current should show the same amounts of increase on either side of resonance as the plate circuit is tuned through resonance with B+ removed

19. The distortion effects caused by class B operation of a radio-frequency amplifier may be minimized by
    (1) Increasing the bias
    (2) Using matched tubes
    (3) Connecting the grids in parallel and the plates in push-pull
    (4) Setting the bias so that operation occurs on the curved portion of the E_g-I_p curve of each tube

20. In a shunt-fed r-f amplifier, if the RFC becomes shorted
    (1) The r-f output is grounded
    (2) The r-f output is distorted
    (3) Plate current decreases sharply
    (4) Degeneration is likely to occur

21. What is meant by a soft vacuum tube?
    (1) A gas-filled tube, such as a thyratron
    (2) A gassy vacuum tube; one not completely evacuated of all gas
    (3) A tube with an envelope of a relatively soft grade of glass not so apt to crack in heating and cooling
    (4) A tube in which the elements have special flexible mountings to minimize damage from shock

22. Which of the following is *not* correct with reference to a grounded-grid amplifier?
    (1) Does not require neutralization
    (2) Draws power from preceding stage when operated class A
    (3) Produces a phase shift of 180° between input and output voltage
    (4) Used primarily at very high frequencies

23. Insufficient excitation to a class C r-f amplifier may
    (1) Cause overheating when fixed bias is used
    (2) Cause parasitic oscillations and increase harmonic radiation
    (3) Cause low plate current or no plate current when fixed bias is used
    (4) Burn out the cathode bias resistor when fixed bias is used

24. A class B amplifier used to amplify a modulated r-f wave is called a
    (1) push-pull amplifier.
    (2) linear amplifier.
    (3) doubler.
    (4) power amplifier.

25. Which of the following circuits never require neutralization, even though triode tubes are used?
    (1) Class B operated push-pull circuits
    (2) Class C operated push-pull circuits
    (3) Circuits using capacitive coupling between double-tuned stages
    (4) Frequency multiplier stages

26. A circuit using two tubes in which the grids are connected push-pull and the plates in parallel is called a
    (1) push-pull circuit.
    (2) push-push circuit.
    (3) linear amplifier.
    (4) frequency tripler.

27. A circuit with good low frequency response used to couple a high impedance input to a low impedance load would be a
   (1) linear amplifier.
   (2) d-c amplifier.
   (3) grounded-grid amplifier.
   (4) cathode follower amplifier.

28. When there is no input signal to the grid of a properly operating class B stage, the plate current
   (1) will be zero, or nearly so.
   (2) will be the same as when there is a signal.
   (3) will be higher than when there is a signal.
   (4) will vary in value, operation being erratic—tube may be damaged.

29. One device that helps reduce the transfer of harmonics is
   (1) a Faraday screen.
   (2) a high-pass filter.
   (3) capacitive coupling between stages.
   (4) link coupling.

30. Undesired oscillations formed by the interelectrode capacity of the tube resonating with the inductance of the lead wires are called
   (1) harmonics.
   (2) parasitics.
   (3) signal distorters.
   (4) intermodulation distortion.

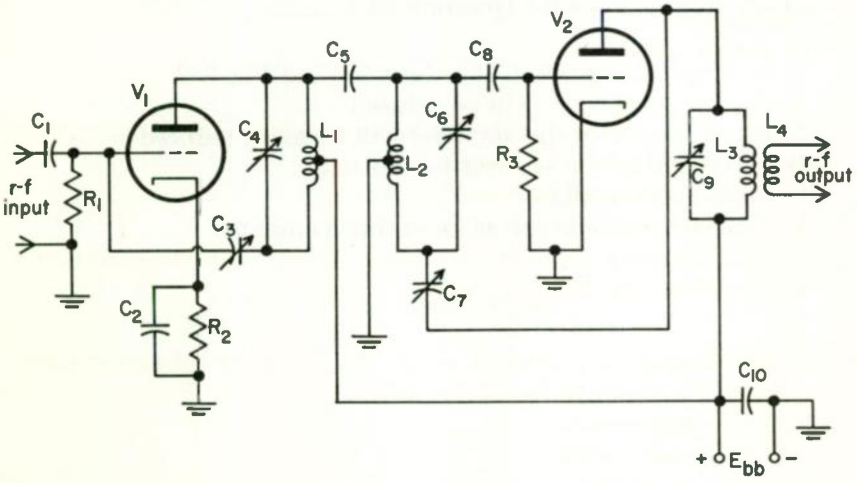

Fig. 23

31. Both stages in the r-f amplifier of Fig. 23 are operated class C. Grid bias for tube V_1 is obtained by
   (1) the voltage drop across R_1 only.
   (2) the voltage drop across R_2 only.
   (3) the voltage drop across both R_1 and R_2, but mostly from R_1.
   (4) the voltage drop across both R_1 and R_2, but mostly from R_2.

32. If the r-f input is lost in the circuit of Fig. 23,
   (1) the plate current of both tubes will drop to zero.
   (2) the plate current of V_2 will drop to zero, and that of V_1 to a lower than normal value.
   (3) tube V_1 may burn out.
   (4) tube V_2 may burn out.

33. What type of coupling is used between the stages in Fig. 23?
   (1) Capacitive coupling
   (2) Coupling is by means of the π-network, consisting of L_1, C_5, and L_2
   (3) Transformer coupling
   (4) Reactance coupling

34. With regard to neutralization of the first stage in Fig. 23,
   (1) neutralization is not used.
   (2) grid neutralization is used.
   (3) plate neutralization is used.
   (4) inductance neutralization is used.

35. With regard to neutralization of the second stage in Fig. 23, (Select answer from choices for Question 34.) ________

36. What would be the effect of a short in C_4 of Fig. 23?
   (1) Plate current to V_1 will be reduced
   (2) R-f output from the amplifier will be much reduced
   (3) Plate supply voltage will be shorted
   (4) Circuit will oscillate
   (5) Amplifier will operate as an untuned amplifier

END OF EXAM

Notes

"To err is human,
but it takes a better excuse the second time."

Resonant Frequencies And Wavelengths Corresponding To LC Products

To find the LC product multiply the inductance in microhenrys by the capacity in picofarads.

Example 1. What will be the approximate frequency of an oscillator which uses an inductance of 0.3 mh and a capacity of 175 pf? The LC product is 300 × 175 = 52,500. The table shows that the resonant frequency is between 682 and 697 kc.

Example 2. How much inductance needs to be used with a 500 pf capacitor in order to resonate at 2000 kc? The table shows that the required LC product is 6335. 6335/500 = 12.67 microhenrys.

LC product (Lμh x Cpf)	frequency megacycles	wave length meters	LC product (Lμh x Cpf)	frequency kilocycles	wave length meters
0.28	300	1	23720	1034.3	290
28.16	30	10	25300	1000	300
112.9	15	20	27040	967.7	310
253	10	30	28840	937.5	320
450.3	7.5	40	30690	909.1	330
703.9	6	50	32500	882.4	340
1014	5	60	34460	859,1	350
1378	4.286	70	36480	833.3	360
1801	3.75	80	38560	810.8	370
2280	3.333	90	40700	789.5	380
2816	3.000	100	42770	769,2	390
3404	2.727	110	45030	750	400
4052	2.500	120	47330	731.7	410
4757	2.308	130	49680	714.3	420
5518	2.144	140	51980	697.7	430
6335	2.000	140	54460	681.8	440
7204	1.875	160	57000	666.7	450
8134	1.765	170	59600	652.2	460
9120	1.667	180	62250	638.3	470
10160	1.579	190	64850	625	480
11290	1.500	200	67570	612.2	490
12390	1,428	210	70390	600	500
13620	1.364	220	73270	588.2	510
14900	1.3042	230	76060	576.9	520
16240	1.250	240	79030	566	530
17550	1.200	250	82080	555.6	540
19010	1.1538	260	85180	545.4	550
20520	1.111	270	88360	535.7	560
22090	1.0713	280			

CLEVELAND INSTITUTE OF ELECTRONICS / CLEVELAND, OHIO

electronics

CLEVELAND INSTITUTE OF ELECTRONICS / CLEVELAND, OHIO

Simplifying Circuit Analysis by Using Kirchhoff's Laws

2314-3

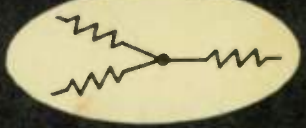

An AUTO-PROGRAMMED Lesson

ABOUT THE AUTHOR

Joseph Molodovitch has been active in the field of electronics for almost 20 years. He has been with Philco for ten years as a technical writer and as an electronics instructor. As a result of his military and civilian experiences, Mr. Molodovitch is well aware of the need for good technician training.

He is the co-author of the Philco Single-Sideband Manual and a contributor to the series on electronic fundamentals, circuit theory, and system applications published by Philco. He has authored a programed text on troubleshooting.

Mr. Molodovitch served in the U.S. Navy as an Aviation Electronics Technician in an operating squadron and as an instructor at the AT(A) School in Memphis, Tennessee.

This is an AUTO-PROGRAMMED Lesson exclusive with the Cleveland Institute of Electronics. It is your assurance of the finest in technical education and training.

**Registered Trademark*

Accredited by the Accrediting Commission
of the National Home Study Council

The Accrediting Commission has been approved by the U.S. Office of Education as a "nationally recognized accrediting agency".

CLEVELAND INSTITUTE OF ELECTRONICS

Simplifying Circuit Analysis by Using Kirchhoff's Laws

By JOSEPH MOLODOVITCH
Philco Corporation

2314-3

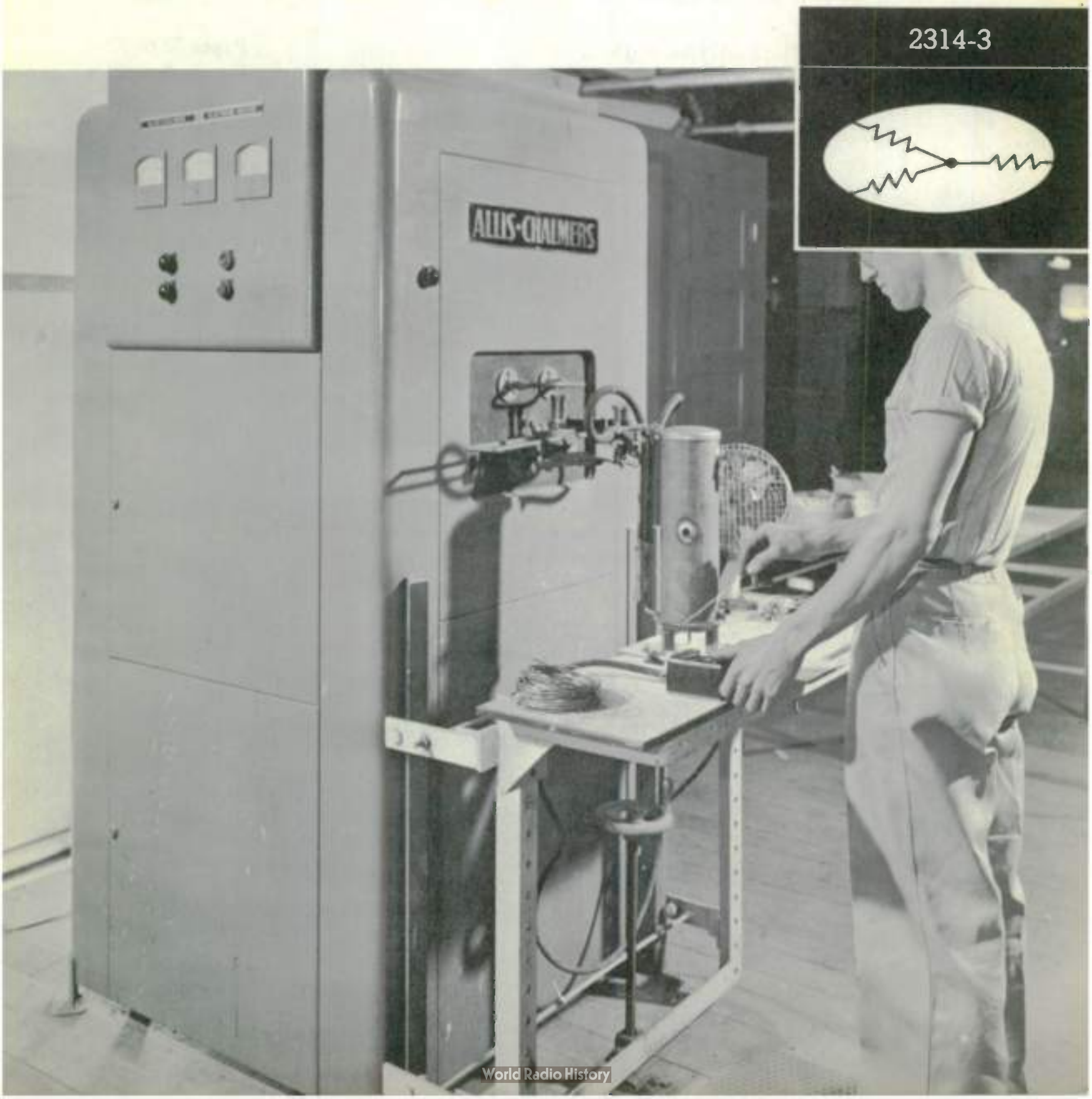

In this lesson you will learn...

Frontispiece: *10-kw induction heater used for brazing heads on liquid receivers used in refrigerators and cold storage boxes.* Photo: Courtesy, Allis-Chalmers.

FIRST EDITION/Fourth Revised Printing/January 1968

2314-3

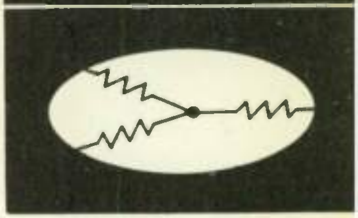

A chat with your instructor

Kirchhoff's laws are just as important as Ohm's law for knowing what is going on in an electrical circuit, and they are even easier to understand. You can find the voltage and current distribution in any circuit by using Ohm's and Kirchhoff's laws, and this lesson will show you how.

Knowing Kirchhoff's laws well will save you plenty of time in later lessons and make learning electronics a lot easier. Also, you will understand electronics a lot better. For one thing, the number of formulas you need to learn will be greatly reduced. If you understand how to analyze a circuit by using Kirchhoff's and Ohm's laws, you won't need to learn a different formula for each different situation — you will know how to analyze each problem without relying upon a lot of formulas.

In studying this lesson you must work out all of the *What Have You Learned?* problems in the order that you come to them. If you don't, you won't be able to understand the lesson. For one thing, the text of each new topic is based upon principles and clarifications brought out in previous *What Have You Learned?* questions, so that if the questions are skipped the text discussion becomes meaningless. Equally important, you can't learn to analyze circuits without practicing.

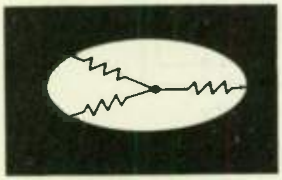

Simplifying Circuit Analysis by Using Kirchhoff's Laws

KIRCHHOFF'S LAW FOR CURRENT

Although this section of the lesson is limited to a discussion of Kirchhoff's current law, we will give both laws here for reference purposes.

CURRENT LAW . . . The amount of current entering any part of a circuit, such as a junction point, is equal to the amount of current leaving that part of the circuit.

VOLTAGE LAW . . . The sum of the voltage drops around any closed series path is equal to the sum of the voltage rises in the circuit.

1 BASIC PRINCIPLES . . . You will notice in Fig. 1(a) that the total current of 20 amp enters junction A through R_1 (from the left). Since 8 amp leaves this junction point and goes through R_2, the remainder of the current, or 12 amp, must leave the junction through R_3. Thus, Kirchhoff's law for current is satisfied at junction A — the amount of current entering (20 amp) is equal to the amount of current leaving (8 amp + 12 amp). You can express this as follows:

Current entering junction A = current leaving junction A

20 amp entering junction A = 8 amp + 12 amp leaving junction A

or 20 amp entering junction A = 20 amp leaving junction A

In Fig. 1(b) you will notice that 9 amp of current enters junction B through R_1 and 4 amp enters the junction through R_2. The sum of these currents, or 13 amp, leaves junction B to the right through R_3. Thus, Kirchhoff's law for current is satisfied at junction B — the amount of current entering (9 amp + 4 amp) is equal to the current leaving (13 amp). You can express this as follows:

Current entering junction B = current leaving junction B

9 amp + 4 amp entering junction B = 13 amp leaving junction B

or 13 amp entering junction B = 13 amp leaving junction B

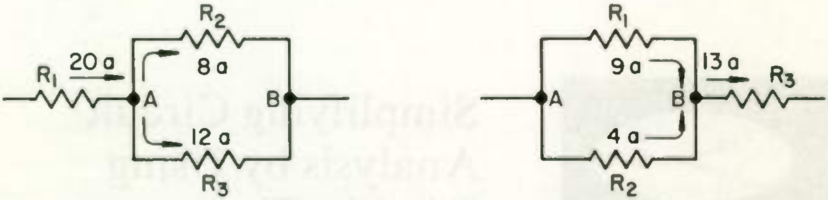

(a) The amount of current (20A) entering a junction point is equal to the current (8A+12A) leaving the junction.

(b) The amount of current (9A+4A) entering a junction point is equal to the current (13A) leaving the junction.

Fig. 1 Illustration of Kirchhoff's law for current.

WHAT HAVE YOU LEARNED?

1. In Fig. 2 what is the value of current through R_3?

2. In Fig. 3(a) what is the value and what is the direction of current through (a) R_2 and (b) R_4?

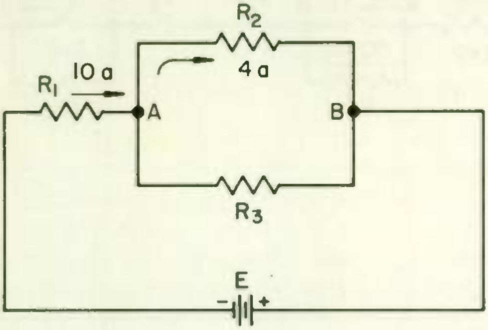

Fig. 2

3. Refer Fig. 3(b). What is the value and what is the direction of current through (a) R_3, (b) R_2, and (c) R_4?

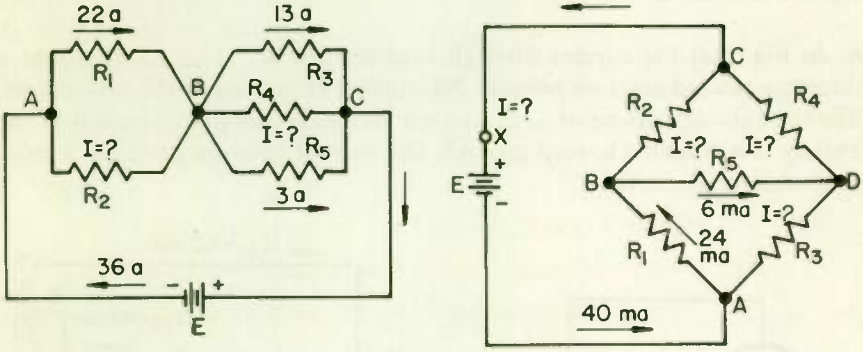

Fig. 3 (a) (b)

4. A basic meter movement can be used to measure a higher value of current by connecting a resistor (called a shunt) in parallel with the meter movement. The shunt resistor carries most of the current around the meter. What is the value of current through the shunt resistor R_S in the meter circuit shown in Fig. 4?

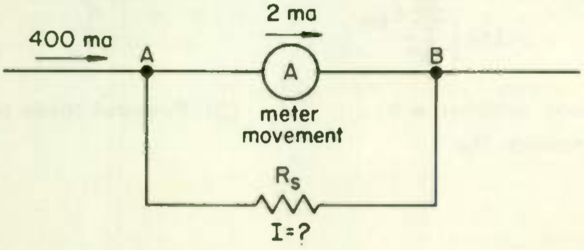

Fig. 4

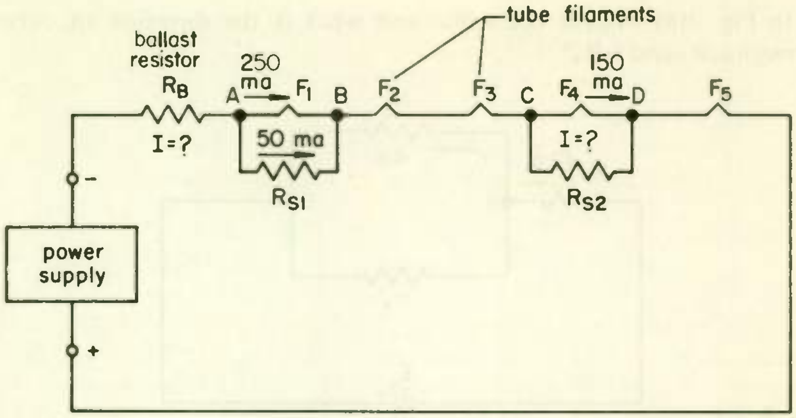

Fig. 5

5. In Fig. 5 is shown a series-connected heater circuit for a vacuum-tube receiver. What is the value of current flowing through (a) ballast resistor R_B and (b) shunt resistor R_{S2}?

6. In Fig. 6(a) the current through load resistor R_L is (a)______ ma in a direction toward junction point B. No current is flowing in the grid circuit. The total circuit current of (b)______ ma leaves the negative terminal of the battery in a direction toward ground. The current entering junction A from ground is (c)______ ma.

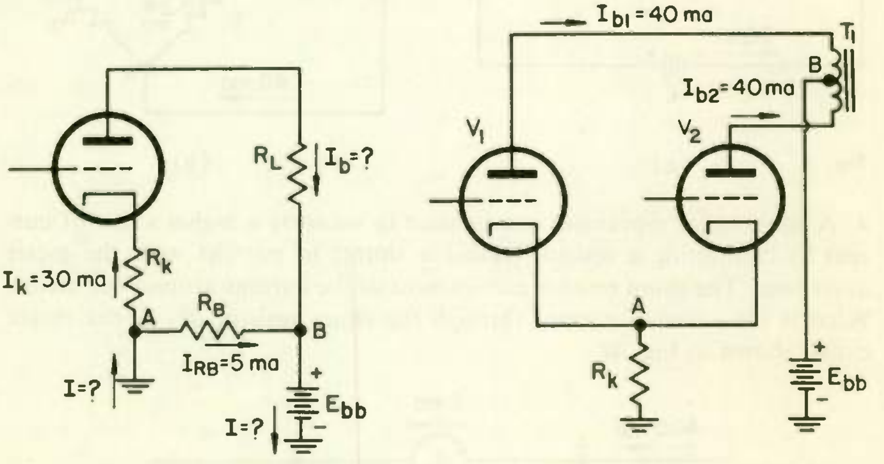

(a) Single triode amplifier with bleeder resistor R_B

(b) Push-pull triode amplifier circuit

Fig. 6

7. In Fig. 6(b) the current through tube V_1 is 40 ma (I_{b1} = 40 ma) and the current through V_2 is, likewise, 40 ma (I_{b2} = 40 ma). (a) What is the value of current at the center tap (junction *B*) of T_1 and in what direction does the current flow between the center tap and the positive terminal of the battery? (b) What is the value of current through R_k and in what direction does the current flow through R_k between ground and junction *A*?

ANSWERS

1. 6 amp 2. (a) 14 amp in the direction from junction *A* through R_2 into junction *B*. (b) 20 amp in the direction from junction *B* through R_4 into junction *C* . . . The known current entering junction *B* is 36 amp: 22 amp through R_1 and 14 amp through R_2. The known current leaving junction *B* is 16 amp: 13 amp through R_3 and 3 amp through R_5. Since the known current leaving junction *B* (16 amp) is less than the known current entering the junction (36 amp), the remainder of the current(20 amp) must leave the junction through R_4. Thus, the current entering junction *B* (22 amp + 14 amp) is equal to the current leaving the junction (13 amp + 20 amp + 3 amp). Another way to work this problem is to note that the currents entering junction *C* (13 amp + 20 amp + 3 amp) must equal the current leaving the junction (36 amp). 3. (a) 16 ma in the direction from junction *A* through R_3 into junction *D* (b) 18 ma in the direction from junction *B* through R_2 into junction *C* (c) 22 ma in the direction from junction *D* through R_4 into junction *C* . . . A current of 6 ma enters junction *D* through R_5, and a current of 16 ma enters the same junction through R_3. The current through R_5 is obtained from Fig. 3, and the current through R_3 was determined in part (a) of this problem. Since the sum of the currents entering junction *D* (6 ma + 16 ma) must equal the current leaving that junction, a current of 22 ma leaves junction *D* through R_4 in a direction toward junction *C*. As a check, the current entering junction *C* (18 ma + 22 ma) must equal the current leaving junction *C* (40 ma).
4. 398 ma 5. (a) 300 ma; (b) 150 ma
6. (a) 30 ma; (b) 35 ma; (c) 35 ma 7. (a) 80 ma; (b) 80 ma from ground through R_k toward junction *A*.

2 CIRCUITS WITH MANY BRANCHES . . . You can use Kirchhoff's current law just as easily in a circuit with many branches, such as the formidable looking one of Fig. 7, as in a circuit with few branches. An ammeter was used to measure the current through most of the components in Fig. 7, and the currents so measured are shown on the diagram. Pick out any junction you wish in the circuit, and you will find that the sum of the currents entering that junction is equal to the sum of the currents leaving. For example, take junction P_4. Currents come into this junction through R_1, R_4, and R_5. The sum of the currents coming in is 2 amp + 9 amp + 4 amp = 15 amp. Current leaves the junction through R_2 and R_3. The sum of the currents leaving is 7 amp + 8 amp = 15 amp, which is equal to the current entering.

As another example, take point P_1. The current entering is the current

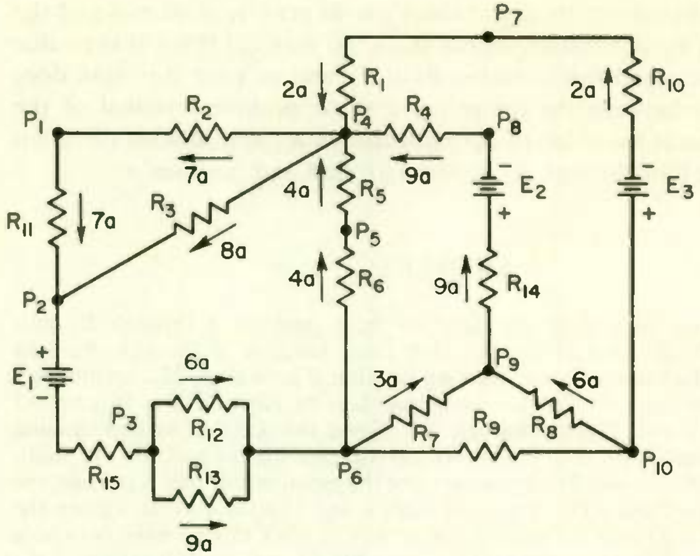

Fig. 7 **Application of Kirchhoff's current law to circuit with many branches.**

through R_2, which is 7 amp, and the current leaving is the current through R_{11}, which is also 7 amp. Since R_2 and R_{11} are in series, this proves, by means of Kirchhoff's current law, that the current is the same in all components connected in series.

It is easy to see why the current leaving a junction must equal the current entering. Consider a highway intersection where a number of roads come together. If 125 cars come into the intersection per day, then 125 cars must leave the intersection per day. Current flow consists of moving electrons or other charged particles, just as traffic consists of moving cars. All of the electrons that come to a junction must leave that junction. Consequently, the sum of the currents entering a junction must equal the sum of the currents leaving.

WHAT HAVE YOU LEARNED?

1. In Fig. 7 the current through R_5 is the same as the current through R_6 because (*the current leaving point* P_5 *must equal the current entering*) (R_5 *and* R_6 *are in series with* R_1).

2. What value of current flows through R_{15} in Fig. 7 and in which direction does it flow?

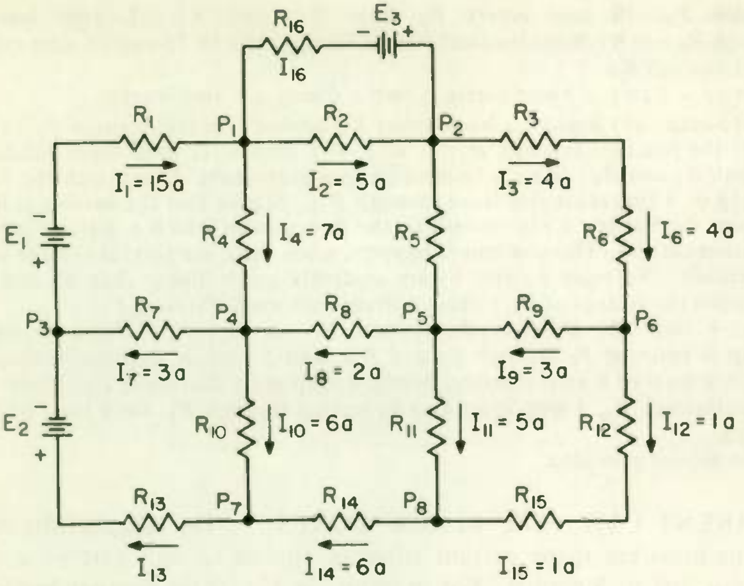

Fig. 8

3. What is the current value and what is the direction of current through R_9 of Fig. 7?

4. Show that the sum of the currents entering P_4 in Fig. 8 is equal to the sum of the currents leaving.

5. The current through R_{16} in Fig. 8 is (a)______ amp, and its direction of flow is toward the (b) *(right) (left).*

6. The current through R_5 in Fig. 8 is (a)______ amp and its direction is (b) *(up) (down).*

7. Study other junction points in Fig. 8 and verify that in every case the total current leaving equals the total current entering.

ANSWERS

1. The current leaving point P_5 must equal the current entering.
2. 15 amp; the direction is toward the right.
3. 8 amp; the direction is toward the right . . . R_9 connects to junction P_{10}. 6 amp leaves P_{10} through R_8, and 2 amp leaves through R_{10} for a total of 8 amp leaving. Hence, 8 amp must enter P_{10}, and the only path through which it can enter is R_9. Hence, 8 amp flows to the right through R_9. We could also work from

junction P_6. 15 amp enters P_6 from R_{12} and R_{13}; 7 amp leaves P_6 through R_6 and R_7. Since the total current leaving must be 15 amp, 8 amp evidently leaves through R_9.

4. 7 amp + 2 amp = 9 amp enters; 3 amp + 6 amp = 9 amp leaves.

5. (a) 3 amp (b) Right . . . Notice that R_{16} connects to the junction P_1. 15 amp enters the junction through R_1. 5 amp + 7 amp = 12 amp leave junction P_1 through R_2 and R_4. Since a total of 15 amp must leave P_1 to match the 15 amp coming in, 3 amp must also leave through R_{16}. Notice that the current is flowing through the battery E_3 in reverse to the direction in which a battery normally furnishes current. This sometimes happens when there are several voltage sources in a circuit. Voltages E_1 and E_2 are evidently much higher than E_3 and hence overcome the voltage of E_3, forcing current backwards through E_3.

6. (a) 4 amp (b) Down . . . R_5 connects to junction P_2. From Problem 5, 3 amp is entering P_2 through E_3 and R_{16}, and 5 amp is entering through R_2. This is a total of 8 amp entering; hence, 8 amp must also leave P_2. Since 4 amp leaves through R_3, 4 amp must also be leaving through R_5, for a total of 8 amp leaving.

7. No answer provided.

3 CURRENT LAW FOR BLACK BOXES . . . The rule that the current leaving must equal the current entering applies to any part of a circuit and not just to junctions. For example, in Fig. 9 the current leaving the shaded area of the diagram must equal the current entering that area. The currents entering the area are I_1 and I_9 for a total current entering of 15 + 3 = 18 amp. The currents leaving the area are I_7, I_{10}, I_{11}, and I_3,

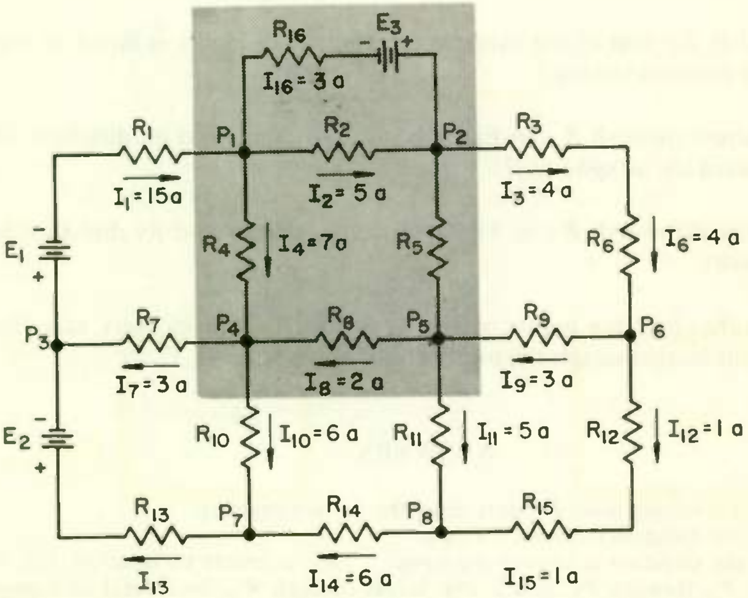

Fig. 9 Application of Kirchhoff's current law to a black box.

for a total current leaving of 3 + 6 + 5 + 4 = 18 amp, which is equal to the current entering.

An important application of this principle occurs in work with tubes and transistors. The sum of the currents entering a tube or transistor must be equal to the sum of the currents leaving.

WHAT HAVE YOU LEARNED?

1. The term "black box" is used in electronics to describe a block on a diagram within which the nature of the circuitry is not stated, because it is not important to know it. Figure 10 shows such a black box. We don't know what is inside the box, but we do know that there are six leads going to the box and that the current in five of the leads is known to be as shown on the diagram. What is the current in lead Y, and in what direction is it flowing?

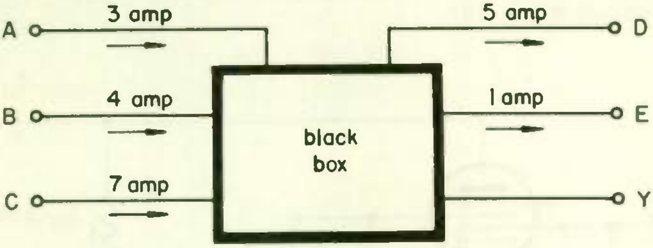

Fig. 10

2. Figure 11 shows the leads and part of the currents associated with a transistor and a pentode tube. The current in lead X is (a) ______ μa, and it flows to the (b) *(right) (left)*. The current in lead B is (c) ______ ma, and it flows to the (d) *(right) (left)*.

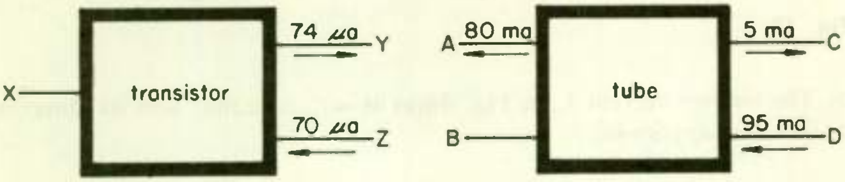

(a) (b)

Fig. 11

3. The d-c current through R_g in Fig. 12 is (a) ______ ma, and its direction of

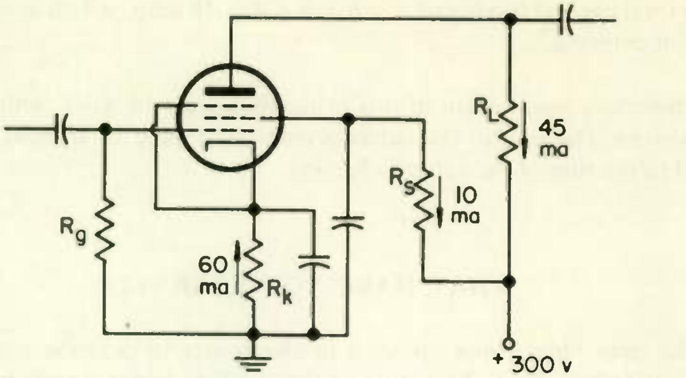

Fig. 12

flow is (b)*(up) (down)*. The capacitors in the circuit play no part, since only d-c currents are involved.

4. What is the value of current through cathode resistor R_k in the pentode amplifier circuit of Fig. 13?

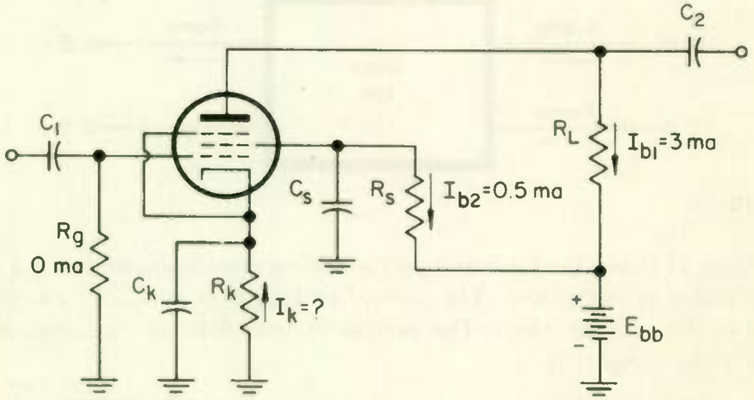

Fig. 13

5. The emitter current I_e in Fig. 14(a) is (a) ______ma, and its direction of flow is (b)*(up) (down)*.

6. The base current I_b in Fig. 14(b) is (a) ______ma, and its direction of flow through R_1 is (b)*(up) (down)*.

7. The value of emitter current in Fig. 15 is (a) ______ma, and its direction of flow through R_e is (b)*(up) (down)*.

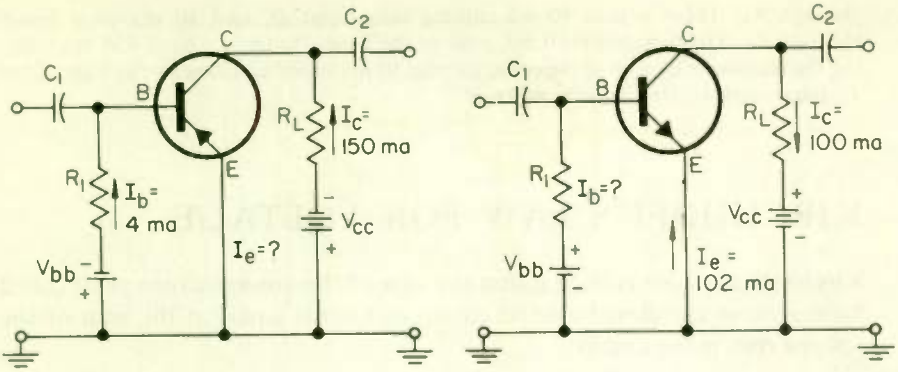

(a) Using PNP transistor

(b) Using NPN transistor

Fig. 14

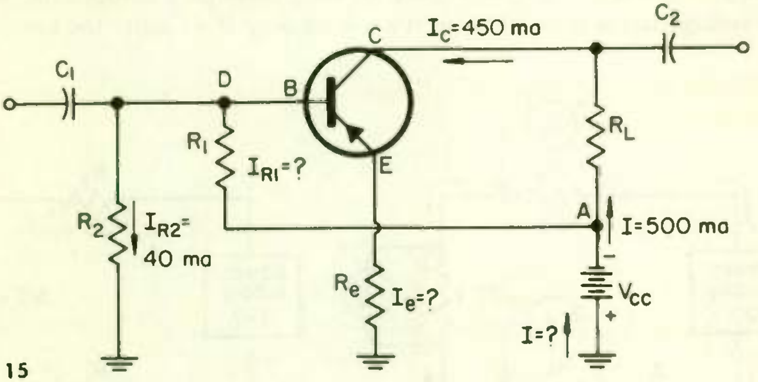

Fig. 15

ANSWERS

1. 8 amp flowing to the right . . . The current entering the black box must equal the current leaving it. 3 + 4 + 7 = 14 amp is shown going in. Hence, the current in *Y* must be 8 amp so that the current going out is also 14 amp: 5 + 1 + 8 = 14 amp.
2. (a) 4 μa; (b) right; (c) 10 ma; (d) left
3. (a) 5 ma (b) Down . . . 60 ma enters the tube through R_k. Consequently, 60 ma must leave. 45 + 10 = 55 ma leaves through R_s and R_L. Hence, 5 ma must leave through R_g so that the current leaving equals the current entering. In ordinary voltage amplifiers, d-c current through R_g is essentially zero and can be ignored. When you study class C amplifiers, however, you will find that for certain types of operation a substantial d-c current flows through R_g, forming what is known as grid-leak bias. The direction of this current flow is down, as in this problem, which puts a negative bias, caused by the voltage drop across R_g, on the grid.
4. 3.5 ma 5. (a) 154 ma; (b) down 6. (a) 2 ma; (b) down
7. (a) 460 (b) Down . . . To find the emitter current, we must first find the base current. At point *A* there is 500 ma coming into the junction from the battery, and 450 ma of it leaves through R_L. Hence, 50 ma must leave point *A* by the path

through R_1. There is thus 50 ma coming into point D, and 40 ma of it leaves through R_2. The remainder, 10 ma, goes to the base. Hence, we have 450 ma entering the transistor by way of the collector and 10 ma entering through the base. Thus I_e, the current leaving must be 460 ma.

KIRCHHOFF'S LAW FOR VOLTAGE

Kirchhoff's law for voltage is that the sum of the voltage drops (also called *falls*) around any closed electric circuit or loop is equal to the sum of the voltage rises in the circuit.

4 BASIC PRINCIPLES . . . To see what we mean by voltage drops and voltage rises, suppose we walk around the loop of Fig. 16(a) in the direction indicated by the arrows. Whenever we walk through a component, we call the voltage across that component a *voltage drop* if we enter the component

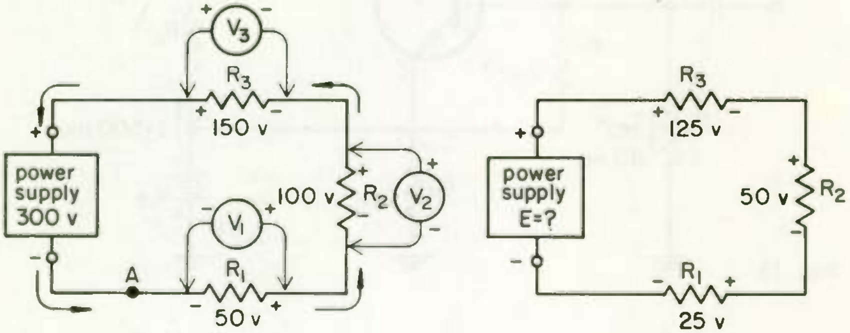

(a) Source voltage (300 v) equals sum of voltage drops (50 v + 100 v + 150 v) in the loop.

(b) Determining source voltage

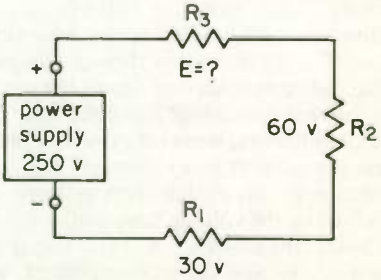

(c) Determining unknown voltage drop

Fig. 16 Illustration of Kirchhoff's law for voltage.

at the negative terminal and exit at the positive terminal. If during our hike we enter the component at the positive terminal and come out at the negative terminal, we call the voltage change across the component a *voltage rise*.

Suppose we start walking at point A in Fig. 16(a). First we walk through resistor R_1 by entering at the left, which is the negative side, and coming out at the right, which is the positive side. Hence, the voltage across R_1 (which can be read on voltmeter V_1) is a voltage drop or fall; and it could also be called a voltage loss.

Continuing our walk around the circuit, we next come to R_2, which we also enter at the negative side and come out of at the positive side, so again we have a voltage drop. The same thing is true of R_3, to which we come next. After we leave R_3 we come to the power supply, which we enter at the positive terminal and leave at the negative one. Hence, the power supply is a voltage rise.

Summarizing, we have three voltage drops, with a sum of $50 + 100 + 150 = 300$ volts, and one voltage rise, which has a value of 300 volts. Hence, the sum of the voltage drops is equal to the sum of the voltage rises.

Notice in Fig. 16 that we walked around the circuit in the direction of current flow. We could have walked around the circuit in the opposite direction. In that case the voltages across the resistors would be voltage rises, because we would enter each resistor at its positive side and leave at its negative side. Similarly, the power supply would become a voltage drop if we were to walk around the circuit in the direction opposite to that of current flow.

Since it is a lot less confusing to think of resistors as causing voltage losses or drops and of power supplies as boosting up the voltage and therefore as voltage rises, we will in this lesson always walk in the direction of current flow when possible.

Before we can know whether a certain voltage is a rise or drop, we must first know the polarity of that voltage. If a voltage has been measured with a d-c voltmeter, we will know the polarity, because before we can get a reading on the voltmeter, the negative lead of the voltmeter must be connected to the negative side of the voltage across the component and the positive lead must be connected to the positive side.

If we know the direction of current, we can also tell the polarity of the voltage across a resistor. The current through a resistor always enters at the negative end and leaves at the positive end. As for power supplies, batteries, and other voltage sources, current leaves the power source from the negative terminal and enters at the positive terminal, assuming the power source is furnishing power to the load. But you will see that a voltage source is sometimes so connected that its voltage "bucks" that of another voltage source, in which case current direction through the lower-voltage source is opposite to its normal direction of furnishing current.

WHAT HAVE YOU LEARNED?

1. Refer to the closed electrical loop in Fig. 16(b). What is the voltage applied to the circuit by the power supply?

2. Refer to the closed electrical loop in Fig. 16(c). What is the voltage drop across R_3?

3. From the information given on the circuits shown in Fig. 17 determine the following: (a) the voltage drop across the vacuum-tube heater F in part (a), (b) the voltage drop across resistor R_B in part (b), and (c) the value of the power supply voltage in part (c).

4. A basic meter movement used in a voltmeter can be made to measure a higher value of voltage by connecting a resistor (called a multiplier resistor) in series with the meter movement. Thus, the multiplier resistor

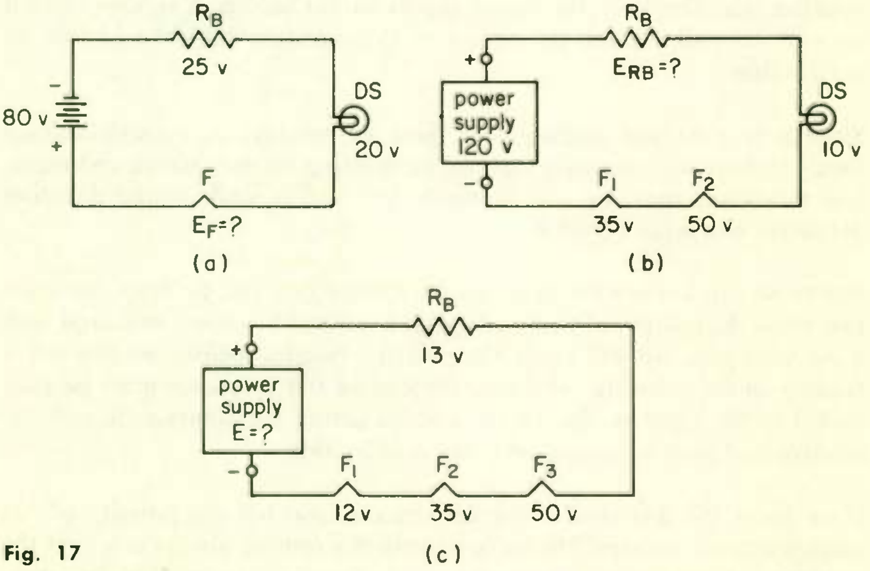

Fig. 17

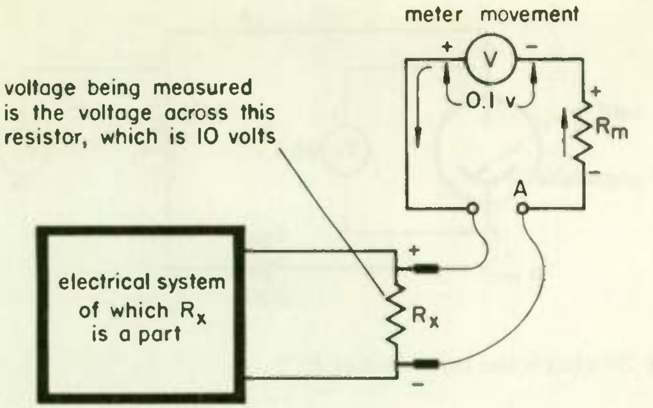

Fig. 18

drops most of the voltage applied to the voltmeter. What is the voltage drop across the multiplier resistor R_m in the voltmeter circuit shown in Fig. 18?

5. In Fig. 19 voltmeters are shown connected across the various circuit elements to read the voltage drops. Voltmeter V_3 reads the plate-to-cathode voltage of the tube. How much is this voltage? (Since the voltage across the tube is caused by the plate-cathode resistance, polarity is the same as for a resistor.)

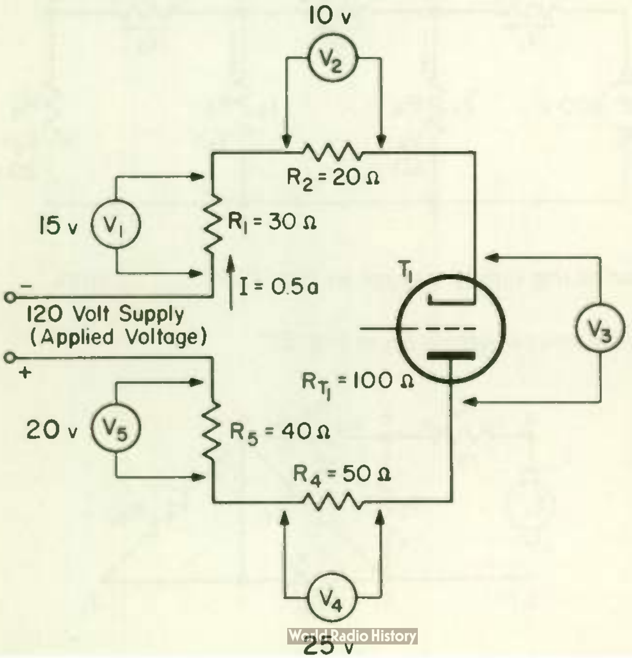

Fig. 19

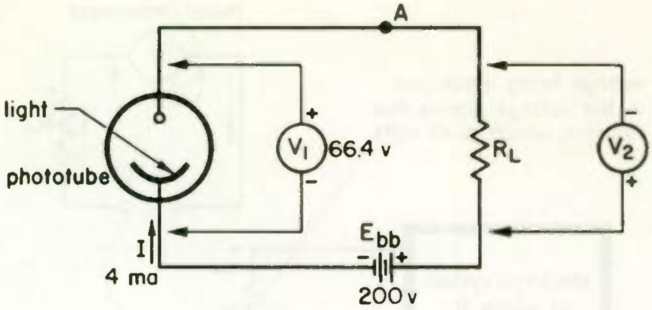

Fig. 20

6. In Fig. 20 what is the resistance of R_L?

7. Starting at the negative terminal of the 100-volt generator in Fig. 21 and walking in the direction of current flow through R_1 to *a* to *b* to *c* to *d* to *e* to *f* and back to the positive side of the voltage source, the sum of the voltage drops walked through is (a)______ volts. Starting again from the negative side of the voltage source and walking the shorter path through R_1, through R_4 to *f* and back to the positive side of the voltage source, the sum of the voltage drops walked through is (b)______ volts. The voltage drop across R_5 is (c)______ volts.

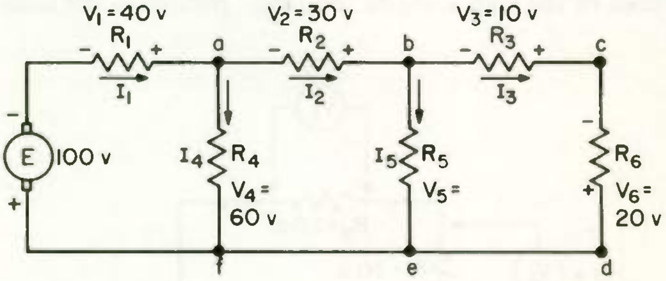

Fig. 21

8. The value of the supply voltage in Fig. 22 is ______ volts.

9. What is the voltage across R_3 in Fig. 22?

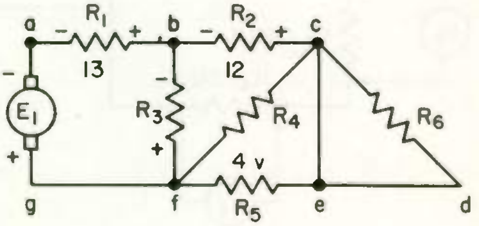

Fig. 22

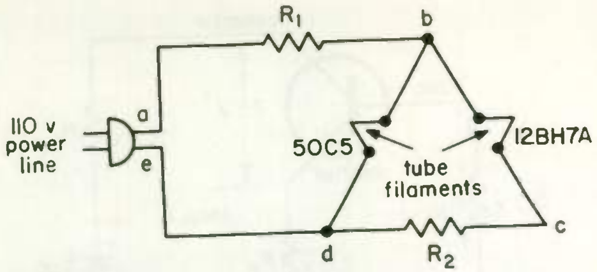

Fig. 23

10. In Fig. 23 the correct voltage across R_1 is (a)______ volts and the correct voltage across R_2 is (b)______ volts. The proper filament voltage for a 50C5 tube is 50 volts, and that for a 12BH7A is 12.6 volts.

11. The filament of a 5OC5 tube draws 0.15 amp, and that of a 12BH7A, 0.3 amp. If you were designing the circuit of Fig. 23, the value of resistance you should use for R_2 is (a)______ ohms, and for R_1 it is (b)______ ohms.

12. The plate voltage of a tube is the voltage measured by a voltmeter connected between plate and cathode. The plate voltage of tube T_1 in Fig. 24 is (a)______ volts, and the plate voltage of tube T_2 is (b)______ volts.

13. The resistance of R_2 in Fig. 24 is (a)______ ohms. The resistance of R_4 is (b)______ ohms. (Assume the grids of the tubes draw no current.)

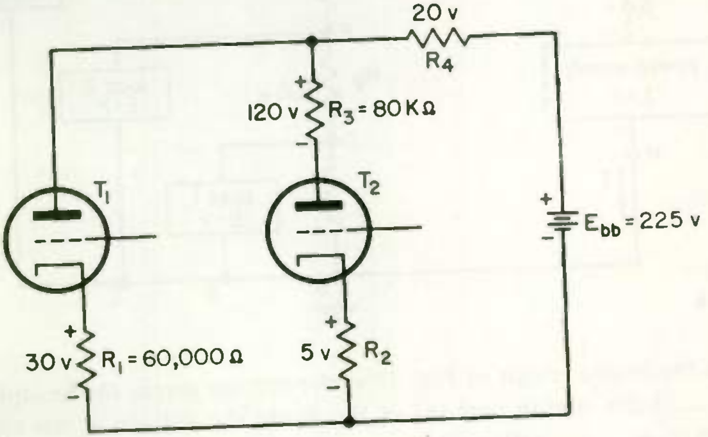

Fig. 24

14. The voltage of the battery E_{cc} in Fig. 25 is ______ volts.

15. If you connect a voltmeter between base and emitter leads in Fig. 25, it will read ______ volts.

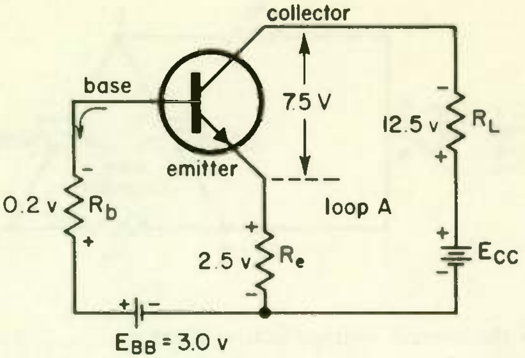

Fig. 25

16. If you connect a voltmeter between collector and base leads in Fig. 25, it will read ______ volts.

17. In the voltage-divider circuit of Fig. 26 the power supply voltage *E* is (a)______ volts, the voltage across load 1 is (b)______ volts, and the voltage across load 2 is (c)______ volts.

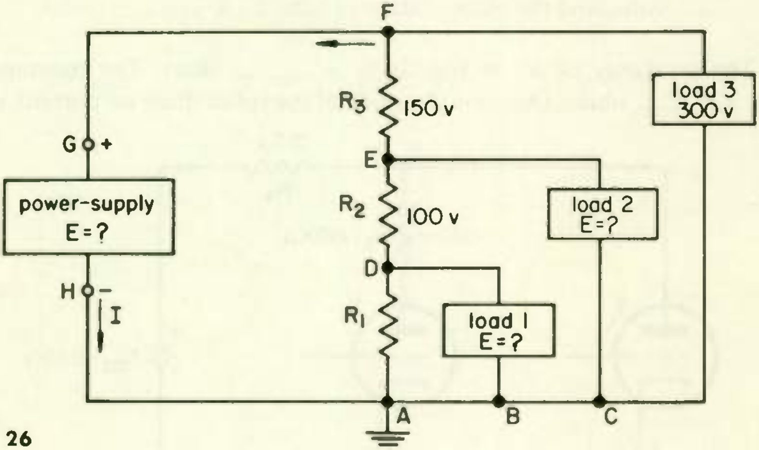

Fig. 26

18. In the bridge circuit of Fig. 27(a) the voltage across the headphones is (a)______ volts, and in part (b) of the figure the voltage across the headphones is (b)______ volts.

19. In the bridge circuit of Fig. 28 resistor R_3 must be adjusted until the voltage across it reads ______ volts in order to balance the bridge.

20. In Fig. 29 the plate voltage (that is, the voltage between cathode and

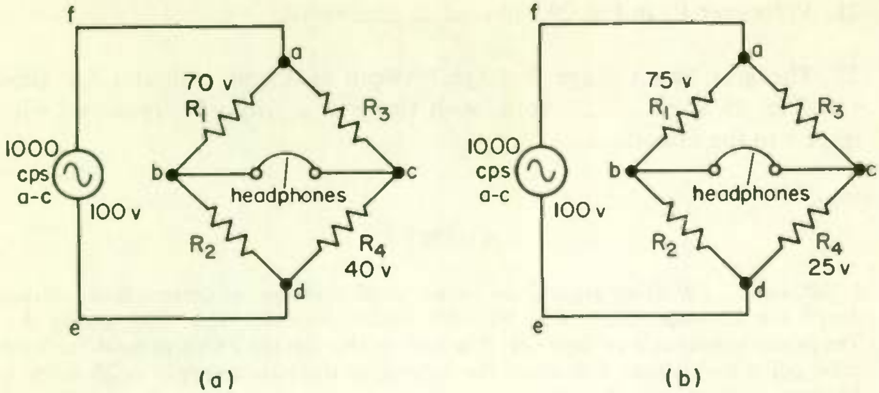

Fig. 27

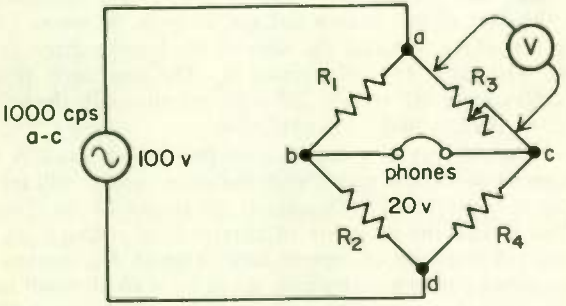

Fig. 28

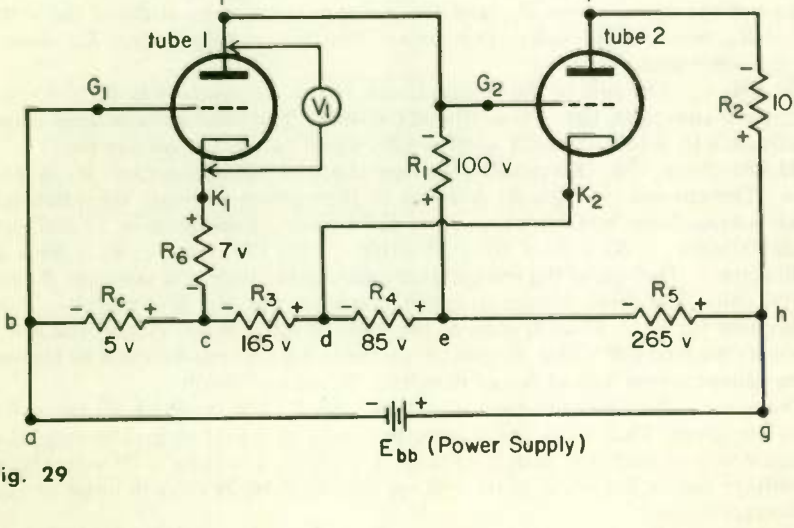

Fig. 29

plate) of tube 2 is ______ volts.

21. Voltmeter V_1 in Fig. 29 will read ______ volts.

22. The grid bias voltage (voltage between grid and cathode) for tube 1 in Fig. 29 is (a) ______ volts, with the grid (b) *(negative) (positive)* with respect to the cathode.

ANSWERS

1. 200 volts . . . Walking around the circuit in the direction of current flow, voltage drops are 25 volts across R_1, 50 volts across R_2, and 125 volts across R_3. The power supply is a voltage rise. The sum of the voltage drops around the loop must equal the voltage rise; thus, the voltage of the power supply is 25 volts + 50 volts + 125 volts = 200 volts.
2. 160 volts . . . Walking in the direction of current, the voltage rise is 250 volts. The known voltage drops in the circuit are 30 volts across R_1 and 60 volts across R_2; therefore, the sum of the known voltage drops is 90 volts. To determine the unknown drop across R_3, subtract the sum of the known drops from the voltage rise: 250 volts − 90 volts = 160 volts across R_3. The total drop around the loop is then 30 volts + 60 volts + 160 volts = 250 volts, which equals the voltage rise.
3. (a) 35 volts; (b) 25 volts; (c) 110 volts
4. 9.9 volts . . . The polarity of voltage across the resistor must be the same as the polarity of the meter movement (otherwise, the meter needle will try to swing backwards). Starting at point A, we walk around the circuit in the direction shown by the arrows. This is also the direction of current flow through R_m and the meter movement, since the direction of current flow through R_m (or any other resistor) must be from negative end to positive end. Since we walk through both R_m and the meter movement by entering at the negative end and leaving at the positive end, both represent voltage drops. When we walk through R_x, we enter at the positive end and come out at the negative end, so that R_x is a voltage rise. Thus the sum of the voltage drops across R_m and the meter movement must equal the voltage rise of R_x, which is 10 volts. This means that the voltage across R_m must be 10 − 0.1 = 9.9 volts.
5. 50 volts . . . The sum of the voltage drops across the resistors is 10 + 15 + 20 + 25 = 70 volts, and 120 − 70 = 50 volts. CHECK: The total voltage drop around the circuit is 10 + 15 + 20 + 25 + 50 = 120, which equals the voltage rise.
6. 33,400 ohms . . . By Kirchhoff's voltage law, the voltage across R_L is 133.6 volts. The current through R_L is equal to the current through the phototube, which is 4 ma. Now, by Ohm's law, R_L = 133.6 volts ÷ 0.004 amp = 33,400 ohms.
7. (a) 100 volts . . . 40 + 30 + 10 + 20 = 100 (b) 100 volts . . . 40 + 60 = 100 (c) 30 volts . . . The sum of the voltage drops around the loop that contains R_5 must be 100 volts. The three voltage drops in that loop are V_1, V_2, and V_5. V_1 and V_2 account for 40 + 30 = 70 volts of the 100-volt total drop. Hence, the voltage across R_5 must be 100 − 70 = 30 volts. Also, the voltage across R_5 must be the same as the voltage across R_3 and R_6, or 10 volts + 20 volts = 30 volts.
8. 29 volts . . . Find a closed path which includes E_1 and in which all the voltage drops are given. That would be from *a* to *b* to *c* to *e* to *f* to *g*. The sum of the voltage drops around that path is 13 volts + 12 volts + 4 volts = 29 volts. Hence, the voltage source E_1, which is the voltage rise, must be 29 volts in order to equal the voltage drops.
9. 16 volts . . . Walking around the circuit in the closed path from *a* to *b* to *f* to *g*,

the sum of the voltage drops must equal 29 volts, the applied voltage (voltage rise) found in Problem 2. That is, the sum of the voltages across R_1 and R_3 must equal 29 volts. Since the voltage across R_1 is 13 volts, that across R_3 must be 16 volts: $13 + 16 = 29$.

10. (a) 60 volts . . . Tracing around the path from *a* to *b* to *d* to *e*, the total voltage drop must be 110 volts. Since the voltage drop across the 5OC5 filament is 50 volts, the voltage across R_1 is $110 - 50 = 60$ volts.

(b) 37.4 volts . . . Tracing around the path from *a* to *b* to *c* to *d* to *e*, the sum of the voltage drops traced through must be 110 volts. The voltage across R_1 has been found to be 60 volts, and the voltage across the 12BH7A filament is 12.6 volts, the voltage across the two being 60 volts + 12.6 volts = 72.6 volts. That leaves 110 volts - 72.6 volts = 37.4 volts that must be dropped across R_2.

11. (a) 125 ohms . . . The voltage across R_2 is 37.4 volts, and the current through it is 0.3 amp. Hence, by Ohm's law, $R = E/I = 37.4/0.3 = 125$ ohms.

(b) 133 ohms . . . The current entering junction *b* from R_1 must equal the current leaving *b* through the two tube filaments. Hence, the current through R_1 is $0.3 + 0.15 = 0.45$ amp. The voltage across R_1 is 60 volts. Hence, the resistance of R_1 must be $60/0.45 = 133$ ohms.

12. (a) 175 volts; (b) 80 volts

13. (a) 3333 ohms . . . Since the current entering tube T_2 must equal the current leaving, the current through R_2 must equal the current through R_3. The current through R_3 is, by Ohm's law, $I = E/R = 120/80{,}000 = 1.5$ ma. Now that we know the current through R_2, its resistance can be found: $R = E/I = 5/0.0015 = 3333$ ohms.

(b) 10,000 ohms . . . The current through R_4 is the sum of that drawn by T_1 and T_2. The current through T_1 is the current through R_1, which is $30/60{,}000 = 0.5$ ma. The current through R_4 is then 0.5 ma + 1.5 ma = 2 ma. Hence the resistance of R_4 is $20/0.002 = 10{,}000$ ohms.

14. 22.5 volts . . . Using the path from negative terminal of E_{CC} through R_e, through emitter to collector, through R_L, and back to the positive side of E_{CC}, the sum of the voltage drops is 12.5 volts + 7.5 volts + 2.5 volts = 22.5 volts. The voltage applied, E_{CC}, being a voltage rise, must equal this value.

15. 0.3 volts . . . Use the path from negative side of E_{BB}, through R_e, through the transistor from emitter to base, through R_b, and finally back to E_{BB}.

16. 7.2 volts . . . Use the path from the negative side of E_{CC} through E_{BB}, through R_b, through the transistor from base to collector, and back to the positive side of E_{CC} by way of R_L. The voltage drops are across E_{BB}, the base-to-collector junction, and R_L. The voltage rises are across R_b and E_{CC}. The sum of the known voltage drops is 3 volts + 12.5 volts = 15.5 volts. The total voltage rise is 22.5 volts + 0.2 volt = 22.7 volts. Since the voltage rises must equal the voltage drops, the voltage drop across the base-collector junction must be 22.7 volts - 15.5 volts = 7.2 volts.

17. (a) 300 volts; (b) 50 volts; (c) 150 volts

18. (a) 10 volts . . . We shall assume that we start walking during that part of the cycle when the top lead of the a-c generator is negative. Then, walking through the bridge by way of *a*, *b*, *c*, *d*, *e*, and *f*, we pass through a drop of 70 volts in R_1, a drop of 40 volts in R_4, a voltage rise of 100 volts in the source voltage, and an unknown voltage across the headphones. Since the total drops must equal the total rises in a closed loop, the voltage across the headphones must be a rise of 10 volts. $70 + 40 = 100 + 10 = 110$. Since the voltage across the headphones is a rise, we must have entered the positive side and left the negative side of the headphones.

(b) 0 volts . . . Walking the path *a*, *b*, *c*, *d*, *e*, and *f*, we find a voltage drop of 75 volts across R_1, a voltage drop of 25 volts across R_4, a voltage rise of 100 volts across the voltage source, and an unknown voltage across the headphones. The voltage rises always equal the voltage drops in a closed loop. In this case, the known drops are equal to the known rise: 75 + 25 = 100 volts. Since the two are equal, the unknown voltage across the headphones must be zero. When this is the case, the bridge is said to be balanced and no tone is heard in the headphones.

19. 80 volts . . . For a balance the voltage across the phones must be zero. Walking from *a* to *c* to *b* to *d*, we must walk through a drop of 100 volts. The voltage across R_3 must be 80 volts, since 80 + 0 + 20 = 100 volts.

20. 250 volts . . . The easiest loop to walk through is probably to start at *d*, go through the tube to *f*, *h*, and *e*, and back to *d*. In walking through this path the voltage drops are across the tube, and R_2 gives us a total drop of 100 volts plus the unknown plate voltage. The voltage rises are across R_5 and R_4, giving us a total 265 + 85 = 350 volts. The drop across the tube, then, must be 350 - 100 = 250 volts.

21. 143 volts . . . One loop that we can walk around is *c*, *i*, *e*, *d*, and back to *c*. The total voltage drops are equal to 7 + 100 + the plate voltage. The sum of the voltage rises is 85 + 165 = 250 volts. The plate voltage is then equal to 250 - (100 + 7) = 143 volts. We could just as easily have walked around the loop in the opposite direction. Walking in the opposite direction, from *c* to *d*, *e*, and *i*, and back to *c*, we find that the voltage drops are across R_3 and R_4 and that the volrage rises are across R_6, the cathode-to-plate resistance, and R_1. Thus, the total voltage rises are equal to 7 + 100 + the plate voltage and the voltage drops are equal to 85 + 165 = 250 volts. Here again, since the drops must equal the rises, the unknown voltage must be 143 volts. Note that the only difference in the two methods used is that drops and rises are reversed.

22. (a) 12 volts . . . The closed loop that we can walk around is from *b* to *c* to K_1 to G_1 and back to *b*. The voltage drops in our loop are equal to 5 + 7 = 12 volts. We do not encounter any known voltage rises on our journey. Hence, the unknown voltage must be a voltage rise and also must be equal to the total voltage drop, which is 12 volts.

(b) Negative . . . We found in (a) that the voltage between the grid and cathode is a voltage rise. This means that we must have entered the voltage at its positive end and left at the negative end. Thus, the grid is negative in respect to the cathode. We could also say that the cathode is positive with respect to the grid.

5 CIRCUIT ANALYSIS

OPEN CIRCUITS . . . Up to this point we have considered voltages around closed loops. Figure 30 shows a circuit in which there is no closed path for current to flow. Suppose we are interested in the voltage between points *A* and *B*. We can find this voltage by using the same technique that we have been using for closed loops. In order to do this problem, we will start at point *A* and walk through the circuit to point *B* and add the voltage rises and voltage drops as we go.

Starting at point *A*, the first voltage that we encounter is E_1, which is a voltage rise. As we move toward point *B*, we next encounter E_2 and E_3, and these also are voltage rises. When we reach point *x* on the circuit, we have encountered three voltage rises. The total *voltage rise*, then, is $E_1 + E_2 +$

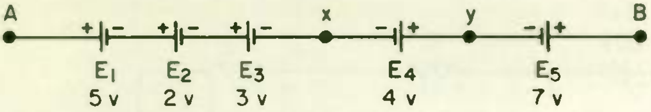

Fig. 30 Circuit with an open in the loop.

$E_3 = 5 + 2 + 3 = 10$ volts. The next voltage we come upon is E_4, which is a voltage drop. Moving on to point *B*, we encounter E_5, which is another voltage drop. We have encountered two voltage drops, and we can now write the total *voltage drop* as $E_4 + E_5 = 4 + 7 = 11$ volts.

Note that the voltage drop is greater than the voltage rise by the amount of 1 volt. That is, in walking from *A* to *B* a net drop of 1 volt is seen. Since in walking through a voltage drop, you enter at the negative terminal and leave at the positive terminal, this means that terminal *B* in Fig. 30 is positive with respect to terminal *A*. To measure the voltage across the complete circuit, the positive voltmeter lead must be placed at point *B* and the negative lead at point *A*. The voltmeter will then read 1 volt.

If we start at point *B* and walk toward point *A*, we encounter the positive terminal of E_5 first, so in going in this direction E_5 is a voltage rise. We can write the voltage rises when going in this direction:

$$\text{Voltage rises} = E_5 + E_4 = 11 \text{ volts}$$

Likewise, we can write the voltage drops:

$$\text{Voltage drops} = E_3 + E_2 + E_1 = 10 \text{ volts}$$

Note that the voltage rise is 1 volt more than the voltage drop. That is, in walking from *B* to *A* a net rise of 1 volt is seen. Since in walking through a voltage rise, you enter at the positive terminal and leave at the negative terminal, this means that terminal *B* is positive with respect to terminal *A*. Or, to say it another way, terminal *A* is negative with respect to terminal *B*. Note that the same voltage and the same polarity are obtained when walking from *A* to *B* as when walking from *B* to *A* in the circuit.

WHAT HAVE YOU LEARNED?

1. The sum of the voltages across R_1, R_2, and R_3 in Fig. 31 is (a)______ volts. The voltage between terminals *A* and *B* in Fig. 31 is (b)______ volts. The voltage at *B* is (c) *(positive) (negative)* with respect to the voltage at *A*

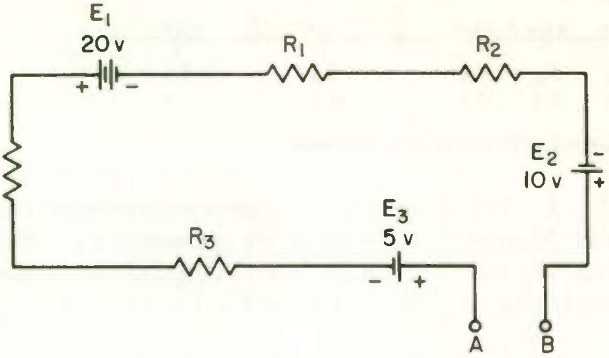

Fig. 31

2. The circuit of Fig. 31 is sometimes called an open loop to distinguish it from a closed loop that contains a complete path for current flow. When the voltage across points *A* and *B* is known, the circuit can be treated as a closed loop. Start at point *A* and walk around the circuit. Write the sum of the voltage rises and the sum of the voltage drops. Treat the voltage between *A* and *B* as a rise or drop, depending upon your answer to Problem 1. Show that the voltage rises equal the voltage drops.

3. The voltage from terminal *B* to terminal *C* in Fig. 32 is (a) ________________. The voltage from terminal *A* to terminal *D* in Fig. 32 is (b)____________________.

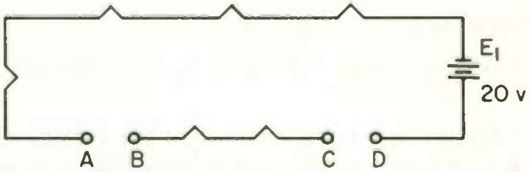

Fig. 32

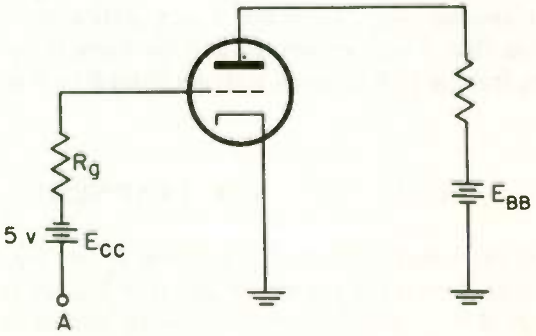

Fig. 33

4. The voltage across R_g in Fig. 33 is (a)________________. Is the tube in Fig. 33 properly biased? (b)________________.

ANSWERS

1. (a) 0 volts . . . There is an open circuit between terminals *A* and *B*. Hence, there can not be any current flowing in the circuit. This being the case, there can not be any voltage across any of the resistors, since $E = IR$.
(b) 15 volts . . . In walking around the circuit from *A* to *B* we encounter a rise of 5 volts across E_3, a rise of 20 volts across E_1, and a drop of 10 volts across E_2. The total of the known rises is 25 volts, and the total of the known drops is 10 volts. Hence, the voltage across terminals *A* and *B* must be a drop of 15 volts. Note that when we walked around the loop, we did not find any voltage across any of the resistors, since there is no current in the circuit. (c) Negative
2. Starting at point *A*,

$$\text{Voltage rises} = E_3 + E_1 = 5 \text{ volts} + 20 \text{ volts} = 25 \text{ volts}$$
$$\text{Voltage drops} = E_2 + V_{AB} = 10 \text{ volts} + 15 \text{ volts} = 25 \text{ volts}$$

V_{AB} is the voltage between terminals *A* and *B*.
3. (a) 0 volts . . . The circuit between terminals *B* and *C* is disconnected from the battery in two places. Hence, there is no current flowing in the circuit between terminals *B* and *C*. This being the case, there can not be any voltage across the network, since there is no voltage source between points *B* and *C*.
(b) 20 volts . . . In walking around the circuit, we see the open between terminals *A* and *D*. Hence, the full voltage will be felt between these two points. In other words, since the circuit between terminals *B* and *C* is open on both ends, it is completely disconnected from the battery.
4. (a) 0 volts . . . Since the circuit is open, no current flows and so there is no voltage across R_g.
(b) No . . . Before the tube can be biased properly the bias voltage E_{CC} must be applied between the grid and the cathode. Since the positive end of E_{CC} is not grounded, E_{CC} is not connected to the cathode. Hence, the E_{CC} is not being applied between the grid and cathode but is merely being applied between the grid and point *A*.

6 USING KIRCHHOFF'S LAWS IN A-C CIRCUITS . . . It is important to understand that the discussion of Kirchhoff's laws in this lesson does not apply without modification to a-c circuits that contain inductance or capacitance. This is because inductance and capacitance cause phase shifts in the current and voltage relationships, so that voltage and currents cannot be directly added to get the total voltage or current as we have done in this lesson. Instead it is necessary to add vectorially in the various computations required in using Kirchhoff's laws. How to do this is the subject of a future lesson. However, the laws as taught in this lesson can be used to analyze the *instantaneous* condition at some specified moment of an a-c cycle. We shall use them in that way in Problem 3 of the What Have You Learned section of Topic 8.

It is obvious from this lesson that the voltage drop across a component in a d-c circuit can never exceed the voltage of the source. In an a-c circuit in which the reactance of *L* and *C* is large compared with *R*, the voltage across a component in a series circuit may be many times greater than the voltage of the voltage source. This is particularly true if the series circuit is near resonance. Similarly, the current in one branch of a parallel a-c circuit with inductance and capacitance can be much higher than the total current supplying all the branches.

7 CIRCUITS WITH CAPACITORS . . . The voltage across a charged capacitor contributes to voltage drops or voltage rises in the circuit in the same way as does the voltage across any other component. Figure 34 shows a circuit with a source connected to charged capacitors. To find the voltage read by the voltmeter in Fig. 34, we can walk counterclockwise around the circuit, starting at terminal *A*. We come first to charged capacitor C_1, which we enter at the negative side and leave at the positive side, so that C_1 is a voltage drop of 5 volts. We next come to C_2, which is a voltage rise, since we enter it at the positive side and leave it at the negative side. Similarly, E_1 and C_3 are also voltage rises. Hence, the sum of the voltage rises is $10 + 20 + 8 = 38$ volts. The voltage between terminals *A* and *B* is the difference between the voltage rises and the voltage drops, or $38 - 5 = 33$ volts.

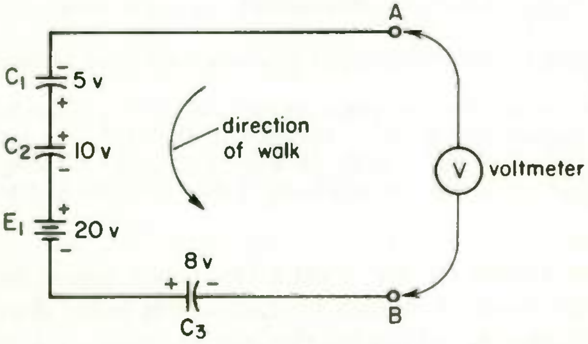

Fig. 34 Finding output voltage in a circuit with capacitor.

If we treat the circuit of Fig. 34 as a closed loop, it is obvious that the voltage from *B* to *A* must be a voltage drop. Remember that the voltage rises must equal the voltage drops in a closed loop. Since there have been more rises (38 volts) than drops (5 volts), an additional 33-volt drop is needed to make the voltage rises and voltage drops equal.

In Fig. 34 we could equally well start at terminal *B* and walk around the circuit clockwise. In that case C_3, E_1, and C_2 are voltage drops and C_1 is a voltage rise. The total voltage drop is now 38 volts, and the voltage rise is 5 volts. The voltage from terminal *A* to *B* is a voltage rise of 33 volts. Since we are walking clockwise and since we always enter a voltage rise at the positive terminal and leave at the negative terminal, terminal *B* must be negative and terminal *A* positive. Hence, the results are the same no matter which way we walk around the circuit.

WHAT HAVE YOU LEARNED?

1. What is the voltage across C_2 in Fig. 35(a) and what is the polarity of that voltage? The voltage distribution represents the circuit condition very shortly after the switch *S* is closed, before the capacitors have had time to fully charge.

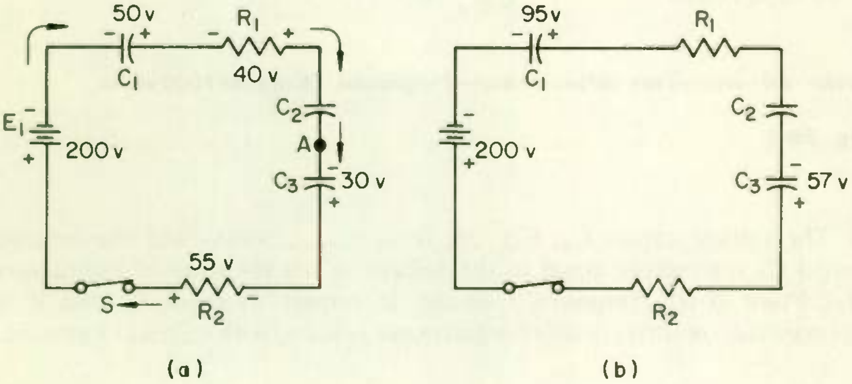

Fig. 35

2. Figure 35(b) is the same circuit as in (a), but it represents the conditions after the switch has been closed for some time, so that the capacitors have become fully charged and the circuit current has become zero. The voltage across R_1 is (a) ______ volts. The voltage across C_2 is (b) ______ with the upper plate (c) *(positive) (negative).*

3. A two-stage resistance-capacitance (*RC*) coupled amplifier circuit is shown in Fig. 36. From the values given, determine (a) the voltage drop across plate load resistor R_4, (b) the voltage drop across screen grid resistor R_3, and (c) the voltage at the screen grid of tube V_1.

4. What is the grid bias voltage of V_2 in Fig. 36?

5. What is the value of current furnished to the circuit by source E_{bb} in Fig. 36?

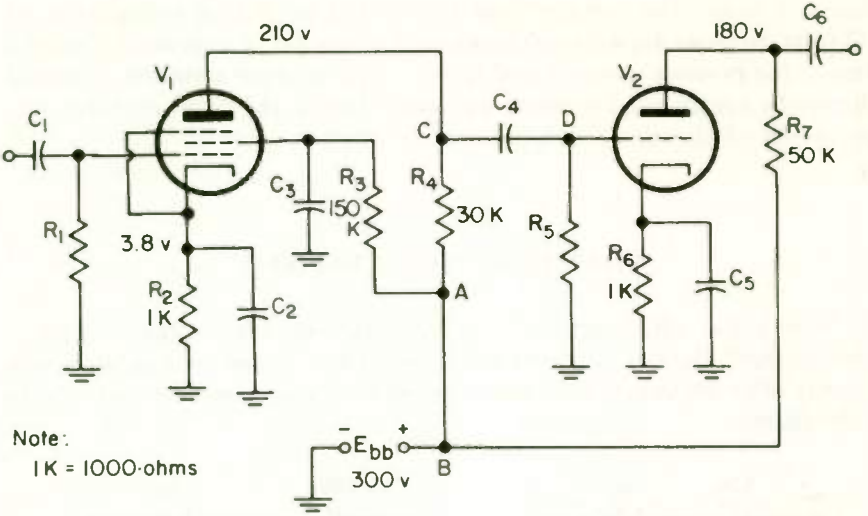

Note: All voltages are values measured to ground. 1K means 1000 ohms.

Fig. 36

6. The voltage across C_4, Fig. 36, is (a) ______ volts, and the voltage across C_4 is therefore equal to the voltage (b) *(on the plate of* V_1*) (across* R_4*)*. Point *D* is (c) *(negative) (positive)* in respect to point *C*, and it is (d) *(negative) (positive) (neither negative nor positive)* with respect to ground.

ANSWERS

1. 25 volts, with upper plate negative and lower plate positive . . . We shall start at point *A* and walk around the circuit in the direction shown by the arrows, although it would make no difference where we started or in what direction we walked. Walking through C_3 first, we have a drop of 30 volts, R_2 gives a drop of 55 volts, E_1 a rise of 200 volts, C_1 a drop of 50 volts, and R_1 a drop of 40 volts. Leaving out C_2, the sum of the voltage drops is $30 + 55 + 50 + 40 = 175$ volts and the voltage rise is 200 volts. Hence, the voltage across C_2 must be a drop of 25 volts, so that the sum of the voltage drops equals the voltage rise. Since in walking through C_2 we walk through a voltage drop, the top plate of C_2 must be negative and the bottom positive.

2. (a) Zero . . . If the current through a resistor is zero, there is no voltage drop across it.

(b) 48 volts (c) Negative . . . You may wonder why the voltage is not the same across each capacitor. The capacitors are of different capacitances, of unequal leakage resistance, or both.

3. (a) 90 volts . . . In walking through the circuit starting at ground, we find a voltage drop of 210 volts from ground to plate, an unknown voltage across R_4, and a voltage rise of 300 volts across E_{BB}. Hence, the voltage across R_4, being a drop, is equal to 300 − 210 = 90 volts.

(b) 120 volts . . . We must first find the screen grid current that is flowing through R_3. The current flowing through R_3 is merely a portion of the current flowing through R_2. In fact, the sum of the plate and screen currents must be equal to the current through R_2. The current through R_2 is easily found by Ohm's law: it is 3.8 volts ÷ 1 kilohm = 3.8 ma. The current through R_4, which is the plate current, is found in a similar manner by 90 volts ÷ 30 kilohms = 3 ma. The total current flowing into the tube is 3.8 ma, and the known current flowing out through R_4 is 3 ma. The screen grid current must therefore be 3.8 ma − 3 ma = 0.8 ma. Then the voltage across R_3 is RI = 150 kilohms x 0.8 ma = 120 volts.

(c) 180 volts . . . Walking around the circuit from ground to the screen grid, to point *A*, and back to ground, we find the total drops to be 120 volts plus the unknown screen voltage, and the total value of voltage rise is 300 volts. Hence, there must be 300 − 120 = 180 volts between the screen grid and ground.

4. 2.4 volts . . . The grid bias voltage for V_2 is the voltage that is across R_6. Before this voltage can be found, the current through R_6 must be found. We can find the value of this current by calculating the current through R_7, which is actually the same, since R_6 and R_7 are in series. However, before we can find the current through R_7, we must find the voltage across it. Walking around the circuit from ground, through the tube, through R_7, and back to ground by way of E_{BB}, we find the voltage across R_7 to be 300 volts − 180 volts = 120 volts. Then, by Ohm's law, the current through R_7 is 120 volts ÷ 50 kilohms = 2.4 ma. The voltage across R_6 is therefore 2.4 ma x 1 kilohm = 2.4 volts.

5. 6.2 ma . . . The current furnished to the circuit by the source is equal to the sum of cathode currents I_{k1} and I_{k2}; that is, 3.8 ma plus 2.4 ma, or 6.2 ma. The current leaving a junction or circuit area, ground in this case, is 3.8 ma into the cathode of V_1 and 2.4 ma into the cathode of V_2. In accordance with Kirchhoff's current law, the sum of these currents (6.2 ma) must enter the current-dividing point (ground) from the negative terminal of source E_{bb}.

6. (a) 210 volts . . . Walking around the loop from ground, to *D*, to *C*, to *B*, and back to ground, we find a drop across R_4 equal to 90 volts and a rise across E_{bb} of 300 volts. Therefore, the voltage across C_4 must be 300 − 90 = 210 volts. In walking through R_5 we did not encounter any voltage, since there is no current flowing through R_5.

(b) On the plate of V_1 . . . We can see this more easily if we walk around the circuit from ground, through V_1, through C_4, and back to ground. We encounter only two voltages, a drop of 210 across V_1 and an unknown obvious rise across C_4. The rise must equal the drop, so it must equal 210 volts.

(c) In walking through C_4 from right to left we found the voltage was a drop, so point *D* must be 210 volts negative in respect to point *C*.

(d) Neither negative nor positive . . . As previously stated, there is no current through R_5, so there is no voltage across it. This being the case, there can not be any voltage difference between point *D* and ground. In other words, the grid is at zero volts in respect to ground.

8 CIRCUITS WITH INDUCTORS . . . When the current varies through an inductor, a voltage is induced across the inductor. When Kirchhoff's voltage law is used, this voltage is treated in the same way as any other voltage. You can determine the polarity of the induced voltage by remem-

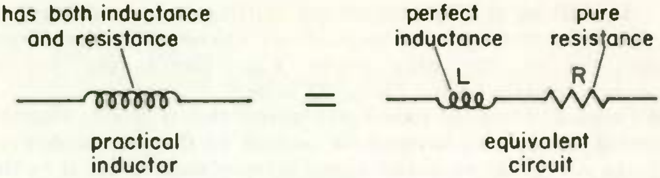

Fig. 37 **A practical inductor can be represented by a perfect inductance in series with a resistance.**

bering that polarity is such as to oppose any change in current value through the inductor.

All practical inductors have resistance as well as inductance. Thus there are actually two voltages associated with an inductor: the voltage across the ohmic resistance of the winding and the voltage induced across the coil by the changing current. If the voltage across the winding resistance is so much that you don't want to ignore it, you can represent the inductor by an equivalent circuit made up of a pure resistance in series with a perfect inductance, as shown in Fig. 37.

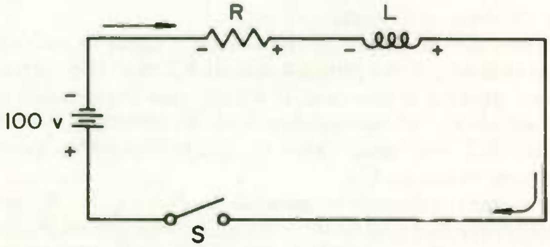

Fig. 38 **Inductance and resistance across a voltage source.**

Resistor *R* in the simple circuit of Fig. 38 could represent the resistance of the inductor, or it could be an actual resistor in series with *L*. In the latter case the resistance of *L* can be ignored, assuming it is much lower than *R*. When switch *S* is closed, current flows in the direction of the arrows, so that the voltage across *R* has the polarity shown. The current is zero before the switch is closed, so when the switch is closed, a voltage will be induced across *L* of such polarity as to try to keep the current zero; that is, of a polarity that bucks the battery voltage and tries to make current flow the opposite direction. This gives us the polarity shown for *L* in Fig. 38. If we walk around the circuit in the direction of the arrows, *L* represents a voltage drop, and it therefore opposes the voltage rise of the battery. At all times, the sum of the voltage drops across *R* and *L* must equal 100 volts, the voltage rise.

1. (a) If in Fig. 38 the voltage across *R* is 40 volts at a certain moment after the switch is closed, the voltage across *L* is ______ volts. (b) At the moment the switch is closed the current in the circuit is zero (although it starts at once to increase). Consequently, the voltage across *L* is ______ volts. (c) After the switch has been closed for some time the voltage across *R* is ______ volts and the voltage across *L* is ______ volts.

2. (a) In Fig. 39 the switch *S* has been closed long enough for the current to reach a steady value. The current value is ______ amp. (b) The switch *S* in Fig. 39 is now suddenly opened. What is the voltage across *L* at the moment the switch is opened and what is its polarity? Remember that current through an inductance can't instantly jump from one value to another, so that the current at the very moment *S* is opened must be the same as it was while *S* was closed (although it starts at once to decrease).

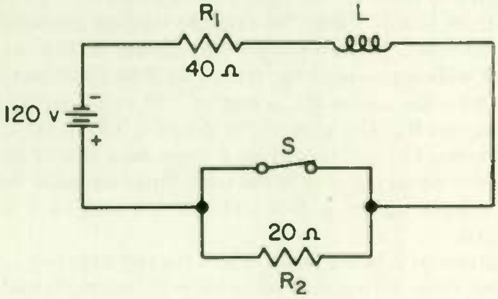

Fig. 39

3. Figure 40 shows an a-c voltage applied to a circuit with *R*, *L*, and *C*. Consider that moment of the a-c cycle when the instantaneous voltage of the voltage source is 65 volts, with polarity as shown. The instantaneous

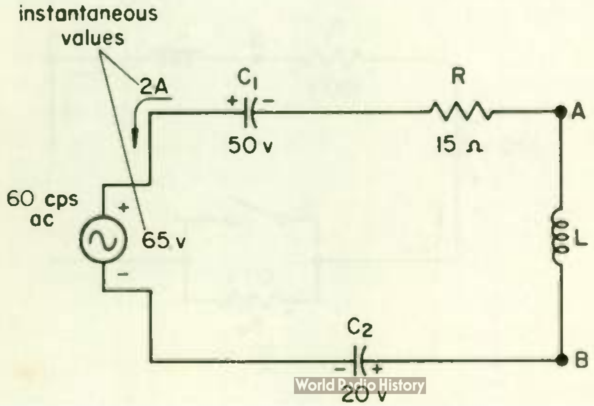

Fig. 40

value of current at that moment is 2 amp, and at that moment the instantaneous voltages across C_1 and C_2 are as shown. What is the voltage across L at the moment and what is its polarity?

ANSWERS

1. (a) 60 volts

(b) 100 volts . . . If the current through R is zero, the voltage drop across R is zero. Since in a closed loop the voltage drops must equal the voltage rise, the voltage across L must be 100 volts.

(c) 100; 0 . . . After the switch has been closed long enough for the current to reach a steady value, there is no longer any voltage drop across L (assuming that L has no resistance), because there is no induced voltage in an inductor except when the current is changing in value. Hence, the only voltage drop in the circuit is that of R, and it must equal the voltage rise of the battery.

2. (a) 3 amp . . . Since the current is steady, there is no voltage across L, so that the total opposition to current flow is the 40 ohms of R_1.

(b) 60 volts with left end positive and right end negative . . . The moment the switch is opened, the current is still 3 amp, so that the voltage across R_1 is 120 volts and that across R_2 is 60 volts. These voltages are shown in Fig. 41. Starting at point A in the figure and walking around the circuit to B in the direction of current flow, we find a drop of 60 volts across R_2, a rise of 120 volts across the battery, and a drop of 120 volts across R_1. The sum of the drops is $120 + 60 = 180$ volts, and the battery rise is 120 volts. The voltage across L must be a rise of 60 volts, in order for the sum of the rises to equal the sum of the falls. Since we walk through L from B to A and since the voltage across L is a rise, the left end of L is positive and the right end is negative.

3. 35 volts, the bottom of L being positive and the top negative . . . Since the current is 2 amp, the voltage drop across R is 30 volts, with the right end of R negative and the left end positive. Starting at A and walking around the circuit in the direction of current flow, R is a drop of 30 volts, C_1 is a drop of 50 volts, the generator is a rise of 65 volts, and C_2 is a drop of 20 volts. The sum of the drops is $30 + 50 + 20 = 100$ volts. Since the sum of the rises must also be 100 volts, the voltage across L must be a rise of 35 volts.

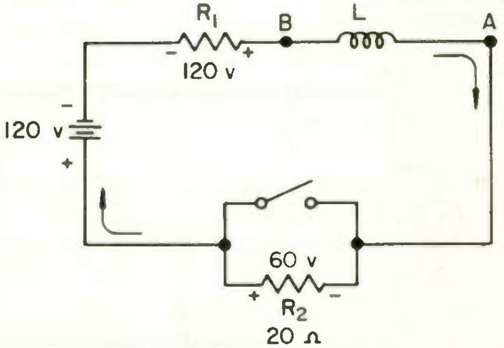

Fig. 41

SIMPLIFYING CIRCUIT ANALYSIS BY USING KIRCHHOFF'S LAWS

EXAMINATION

Circle the number of the correct answer for each question that follows. When you are finished, transfer the answers to the answer sheet by putting X's in the proper squares. When the graded answer sheet is returned to you, correct in this book any questions you may have missed. By doing so, you will have a record of the correct answers to all questions for review purposes.

1. It is impossible to have learned very much studying this lesson unless you worked out every *What Have You Learned?* question before going on to the next topic. One reason for this is that you can't learn to analyze electronic circuits unless you practice doing so—and thus prepare for a top-notch job, rather than being just another run-of-the-mill technician. Another reason why it is nothing but a waste of your time to try to study the lesson without doing the *What Have You Learned?* problems is because
   (1) new principles are taught and clarified in the *What Have You Learned?* sections, which are needed to understand the following topic—you can't expect to understand any topic if you have skipped the previous *What Have You Learned?* problems.
   (2) the answers to the examination questions are given in the *What Have You Learned?* sections.

2. Kirchhoff's Laws tell us that in a pentode vacuum tube that
   (1) when the grid is made more negative the plate current decreases.
   (2) when the plate voltage increases the plate current will increase.
   (3) the sum of the currents flowing into the tube must equal the sum of the currents leaving.
   (4) the sum of the voltages to ground from the different pins is equal to the power supply voltage.

3. Although tubes are generally operated so that no grid current flows, you will learn later that in some important types of operation (such as class C), grid current does flow. Find the value of the grid current in Fig. 42.

(1) 5 ma	(4) 30 ma	(7) 70 ma
(2) 10 ma	(5) 35 ma	(8) 95 ma
(3) 20 ma	(6) 60 ma	

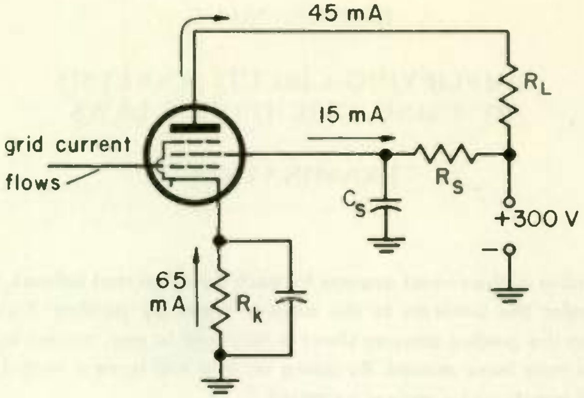

Fig. 42

4. With reference to Question 3, which direction does grid current flow?
   (1) Flows into the tube
   (2) Flows out of the tube

5. The current through R_4 in Fig. 43 is
   (1) 10 ma.
   (2) 15 ma.
   (3) 25 ma.
   (4) 35 ma.
   (5) 40 ma.
   (6) 45 ma.
   (7) 50 ma.
   (8) 85 ma.

6. The current through R_5 in Fig. 43 is
   (1) 5 ma.
   (2) 10 ma.
   (3) 15 ma.
   (4) 20 ma.
   (5) 25 ma.
   (6) 45 ma.
   (7) 50 ma.
   (8) 60 ma.

7. The current through R_2 in Fig. 43 is
   (1) 5 ma.
   (2) 10 ma.
   (3) 15 ma.
   (4) 20 ma.
   (5) 25 ma.
   (6) 35 ma.
   (7) 40 ma.
   (8) 60 ma.

8. Having found the currents in R_2, R_4, and R_5 in Fig. 43, you should next check your answers by
   (1) seeing if the voltage across R_2 is equal to the voltage across R_3, and that the voltage across V_1 is equal to the voltage across R_4.
   (2) checking to see if the current leaving each of the points *A*, *B*, *C*, and *D* is equal to the current entering each of these points.
   (3) checking to see if the current leaving any one of the points *A*, *B*, *C*, or *D* is equal to the current entering that point–there is no need to check more than one point.

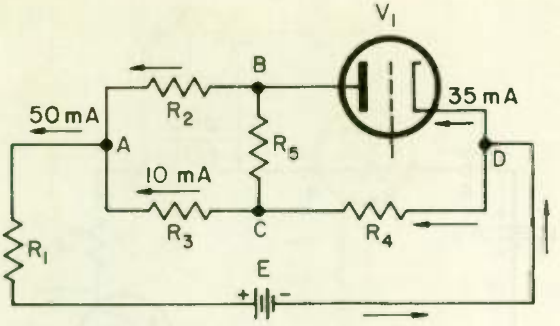

Fig. 43

9. Figure 44 shows part of a circuit from a variable-waveshape generator. What is the current through the diode tube?

(1) 90 ma	(3) 310 ma	(5) 475 ma
(2) 160 ma	(4) 325 ma	(6) 560 ma

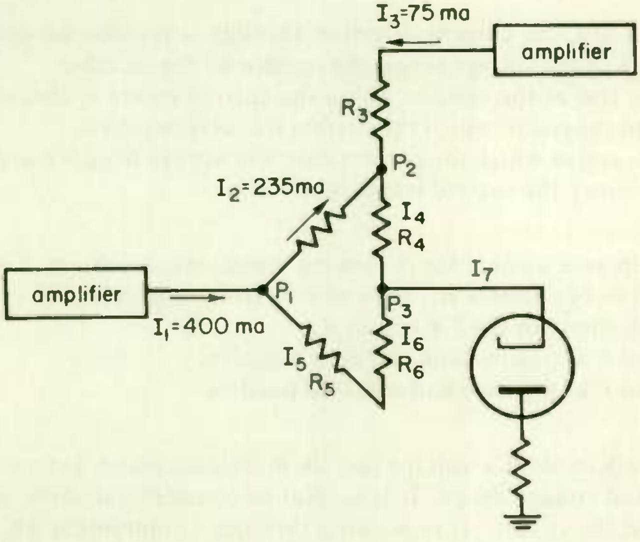

Fig. 44

10. The leads on all d-c voltmeters are marked + and − so that we can tell the polarity of the voltage across any component. A d-c voltmeter will not read if connected with polarity different from that of the voltage being read. The polarity of the 1.5 volts across the lamp in Fig. 45 is
    (1) left lead to lamp positive, right lead negative.
    (2) left lead to lamp negative, right lead positive.

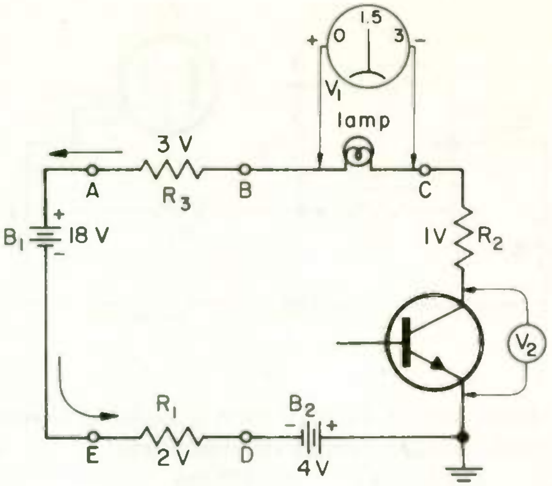

Fig. 45

11. If we know the current direction through a resistor we can tell the polarity of the voltage across the resistor by the fact that
    (1) the end of the resistor where the current enters is always positive and the end at which the current leaves is negative.
    (2) the end at which the current enters is always negative and the end at which the current leaves is positive.

12. To help you answer the following questions, mark on Fig. 45 the polarities of resistors R_1, R_2, and R_3. If marked correctly your drawing will show for the 2 V across R_1,
    (1) end E as positive and end D as negative.
    (2) end E as negative and end D as positive.

13. To use Kirchhoff's voltage law we must distinguish between voltage rises and voltage drops. It is helpful to consider ourselves as walking around the circuit. If in walking through a component we enter the component at the positive end and leave the component at the negative end, we consider the voltage across that component as a
    (1) voltage drop.
    (2) voltage rise.

14. Suppose that we walk around the circuit of Fig. 45 in the direction of current flow. We then find the voltage across resistor R_2 to be
    (1) a voltage drop.   (2) a voltage rise.

15. Continuing to walk in the direction of current flow, we further find
    (1) the voltages across batteries B_1 and B_2 to be voltage rises.
    (2) the voltages across B_1 and B_2 to be voltage drops.
    (3) the voltage across B_1 to be a voltage rise and that across B_2 to be a voltage drop.
    (4) the voltage across B_1 to be a voltage drop and that across B_2 to be a voltage rise.

16. We can find the voltage between collector and emitter (which is the reading of voltmeter V_2) in Fig. 45 by
    (1) starting at point *A* (or any other point) and walking completely around the circuit back to the starting point, noting as you walk through each component whether it is a voltage rise or a voltage drop. Then apply the rule that the sum of the voltage rises must equal the sum of the voltage drops.
    (2) considering all batteries as voltage rises and all resistors as voltage drops. Then apply the rule that the sum of the voltage rises must equal the sum of the voltage drops.

17. Voltmeter V_2 in Fig. 45 reads

(1) 6 volts.	(4) 8.5 volts.	(7) 14 volts.
(2) 6.5 volts.	(5) 9.5 volts.	(8) 14.5 volts.
(3) 7.5 volts.	(6) 12 volts.	

18. What will a voltmeter with leads properly connected between points *A* and *C* read in Fig. 45? *Hint:* Walk from *C* to *A* (or from *A* to *C*), combining voltages walked through as explained in Topic 4 of the lesson.
    (1) 1.5 volts (2) 3 volts (3) 4.5 volts (4) 6.5 volts

19. What is the voltage between point *E* and ground in Fig. 45? (That is, what will a voltmeter read if connected with one lead to ground and one to point *E*?)
    (1) 2 volts (2) 4 volts (3) 6 volts (4) 12 volts

20. In reading the voltage between point *E* and ground in Fig. 45, you should connect the voltmeter leads so that
    (1) positive lead is to point *E* and negative lead to ground.
    (2) negative lead is to point *E* and positive lead to ground.

21. What is the voltage at point *A* with respect to ground in Fig. 45? (This means, what will a voltmeter read if connected with one lead at point *A* and the other lead to ground? Voltage read is considered positive if positive voltmeter lead is connected to point *A*, and negative if negative voltmeter lead is connected to point *A*.)

(1) +12 volts
(2) +16 volts
(3) +20 volts
(4) +24 volts
(5) −12 volts
(6) −16 volts
(7) −20 volts
(8) −24 volts

22. In a complicated circuit with various series and parallel branches, it is still easy to use Kirchhoff's voltage law. Just remember
    (1) that if we start at any point and walk around any path whatsoever until we get back to the starting point, the sum of the voltage rises walked through must equal the sum of the voltage drops walked through.
    (2) the same as (1) above, except that we must always walk in the direction of current flow.

23. We are building the circuit of Fig. 46, and we must know the voltage across C_1 so that we can order a capacitor of suitable voltage rating. We can find this voltage by
    (1) finding the voltage drop across R_s. The voltage across C_1 will equal this voltage.
    (2) finding the voltage drop across R_s, and subtracting this value from E_{bb}.
    (3) walking around a closed loop so chosen that it will include walking through C_1. The voltage across C_1 is that value which makes the sum of the voltage drops walked through equal to the sum of the voltage rises.

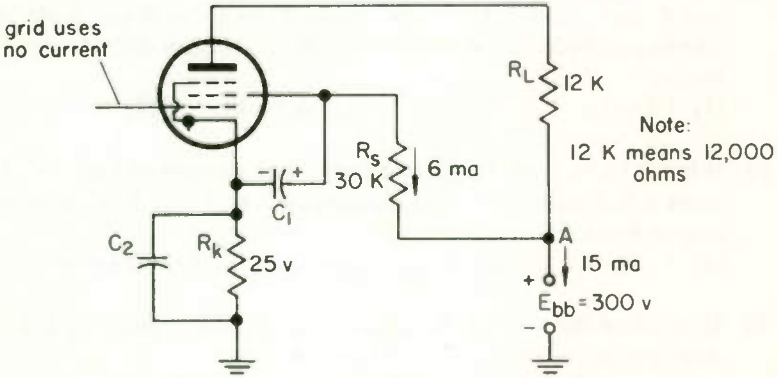

Note:
12 K means 12,000 ohms

Fig. 46

24. What is the d-c voltage across capacitor C_1 in Fig. 46?
    (1) 95 volts
    (2) 120 volts
    (3) 180 volts
    (4) 275 volts
    (5) 300 volts

25. What is the plate voltage (voltage between plate and cathode) in Fig. 46?

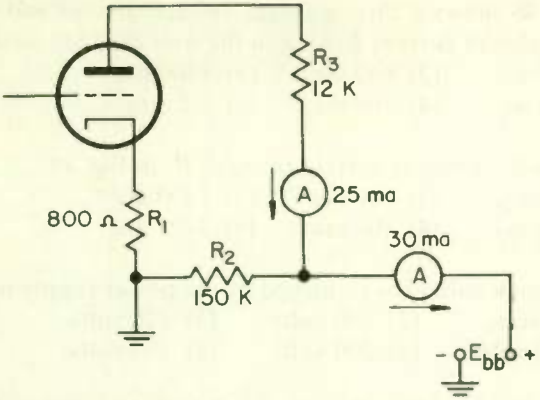

Fig. 47

(1) 95 volts
(2) 108 volts
(3) 120 volts
(4) 133 volts
(5) 167 volts
(6) 180 volts
(7) 192 volts
(8) 275 volts

26. To find the plate voltage (the voltage between plate and cathode) in Fig. 47, we want to walk around a closed path that will include walking between cathode and plate. However, before we do this we must
    (1) use Kirchhoff's current law to find the current in R_1 and R_2, and then find the voltages across R_1, R_2, and R_3.
    (2) know the value of the power supply voltage E_{bb}, and subtract the voltage drop across R_3 from this value.

27. In Fig. 47 what is the value of plate voltage (the voltage between plate and cathode)?
    (1) 225 volts
    (2) 300 volts
    (3) 426 volts
    (4) 430 volts
    (5) 450 volts
    (6) 475 volts
    (7) None of these.

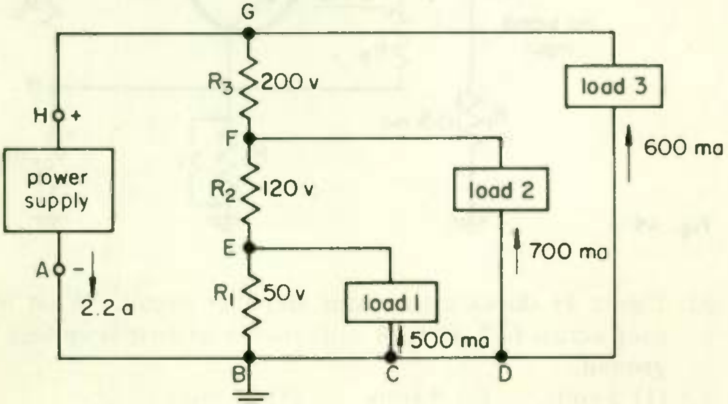

Fig. 48

28. Figure 48 shows a three-element voltage divider and its loads. What is the value of current flowing in the wire that connects *C* to *D*?
(1) 200 ma (3) 600 ma (5) 1300 ma
(2) 500 ma (4) 700 ma (6) 2.2 amp

29. What is the value of current through R_2 in Fig. 48?
(1) 200 ma (3) 500 ma (5) 1200 ma
(2) 400 ma (4) 900 ma (6) 2200 ma

30. How much voltage is furnished by the power supply in Fig. 48?
(1) 50 volts (3) 170 volts (5) 320 volts
(2) 120 volts (4) 200 volts (6) 370 volts

31. If you were building the circuit of Fig. 48, what value of resistance should you use for R_1?
(1) 20 ohms (4) 200 ohms (6) 250 ohms
(2) 22.7 ohms (5) 227 ohms (7) None of these
(3) 125 ohms

32. What is the voltage across load 2 in Fig. 48?
(1) 120 volts (3) 200 volts (5) 370 volts
(2) 170 volts (4) 250 volts

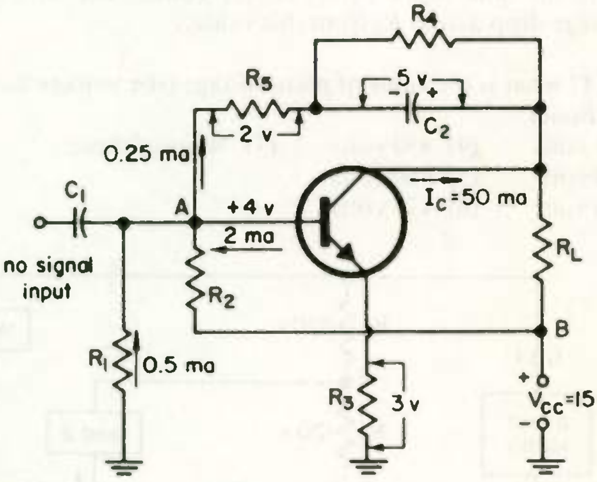

Fig. 49

33. Figure 49 shows a transistor amplifier circuit. What is the voltage drop across R_L? The +4 volts shown on base is voltage measured to ground.
(1) 3 volts (3) 8 volts (5) 15 volts
(2) 4 volts (4) 11 volts

34. What is the voltage drop between the base and emitter terminals in Fig. 49?
(1) 1 volt (2) 3 volts (3) 4 volts (4) 11 volts

35. What is the voltage drop across R_2 in Fig. 49?
(1) 1 volt (3) 4 volts (5) 15 volts
(2) 3 volts (4) 11 volts

36. How much current flows through emitter resistor R_3 in Fig. 49?
(1) 2.5 ma (2) 48 ma (3) 52 ma (4) 52.5 ma

37. How much current flows through base resistor R_2 in Fig. 49?
(1) 0.5 ma (3) 2 ma (5) 2.25 ma
(2) 1.5 ma (4) 2.5 ma (6) 52.5 ma

38. How much current enters the positive terminal of voltage source V_{CC} in Fig. 49?
(1) 50 ma (2) 52 ma (3) 52.5 ma (4) 50.5 ma

39. What is the plate-to-ground voltage in Fig. 50?
(1) 65 volts (4) 140 volts (6) 215 volts
(2) 115 volts (5) 195 volts (7) None of the above
(3) 120 volts

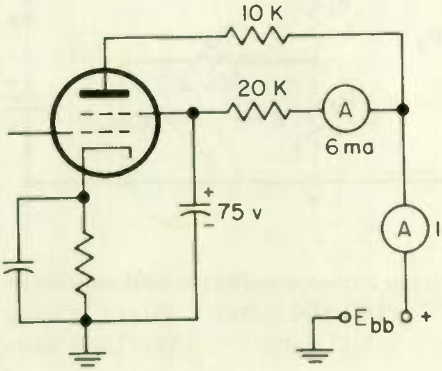

Fig. 50

40. What is the voltage across R_2 in Fig. 51? Arrows on the diagram indicate direction of current flow through R_1 and R_3, but not through R_2.
(1) 10 volts (3) 40 volts (5) 70 volts (7) 100 volts
(2) 30 volts (4) 60 volts (6) 90 volts (8) 130 volts

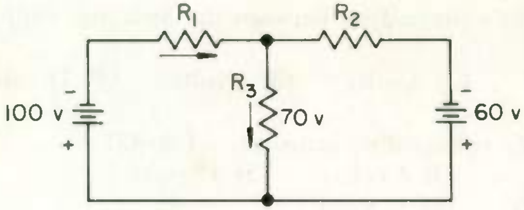

Fig. 51

41. What is the direction of current flow through R_2 in Fig. 51?
    (1) To the right.
    (2) To the left.
    (3) Can't be determined from information given.

42. What is the voltage of the battery V_{EE} in Fig. 52?
    (1) 2.41 volts
    (2) 6.74 volts
    (3) 7.04 volts
    (4) 8.37 volts
    (5) 10.96 volts
    (6) 12 volts
    (7) None of the above

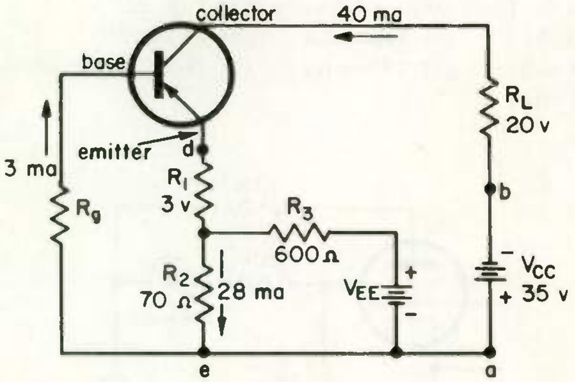

Fig. 52

43. What is the voltage between collector and emitter in Fig. 52?
    (1) 6.1 volts
    (2) 9.44 volts
    (3) 10.04 volts
    (4) 12 volts
    (5) 12.21 volts
    (6) 12.38 volts

END OF EXAM


CLEVELAND INSTITUTE OF ELECTRONICS

CLEVELAND INSTITUTE OF ELECTRONICS / CLEVELAND, OHIO

electronics

CLEVELAND INSTITUTE OF ELECTRONICS / CLEVELAND, OHIO

Tracing through Decision-Making Circuits

2313-3

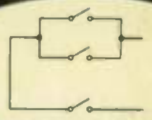

An AUTO-PROGRAMMED™ Lesson

ABOUT THE AUTHOR

This text on Tracing through Decision-Making Circuits was written by Edward M. Prentke who is experienced in the teaching of electronics at the technical level.

A graduate of Case Institute of Technology with a degree in Electrical Engineering, Mr. Prentke was connected for many years in electronic equipment sales and services. He also taught at Case and Fenn College.

He is currently a Medical Electronics Engineer at the Highland View Hospital doing research on prosthetic devices.

Mr. Prentke held a First Grade Amateur License.

This is an AUTO-PROGRAMMED* Lesson exclusive with the Cleveland Institute of Electronics. It is your assurance of the finest in technical education and training.

*Trademark

Accredited by the Accrediting Commission of the National Home Study Council

The Accrediting Commission has been approved by the U.S. Office of Education as a "nationally recognized accrediting agency".

CLEVELAND INSTITUTE OF ELECTRONICS

Tracing through Decision-Making Circuits

By EDWARD M. PRENTKE
Technical Staff
Cleveland Institute of Electronics

2313-3

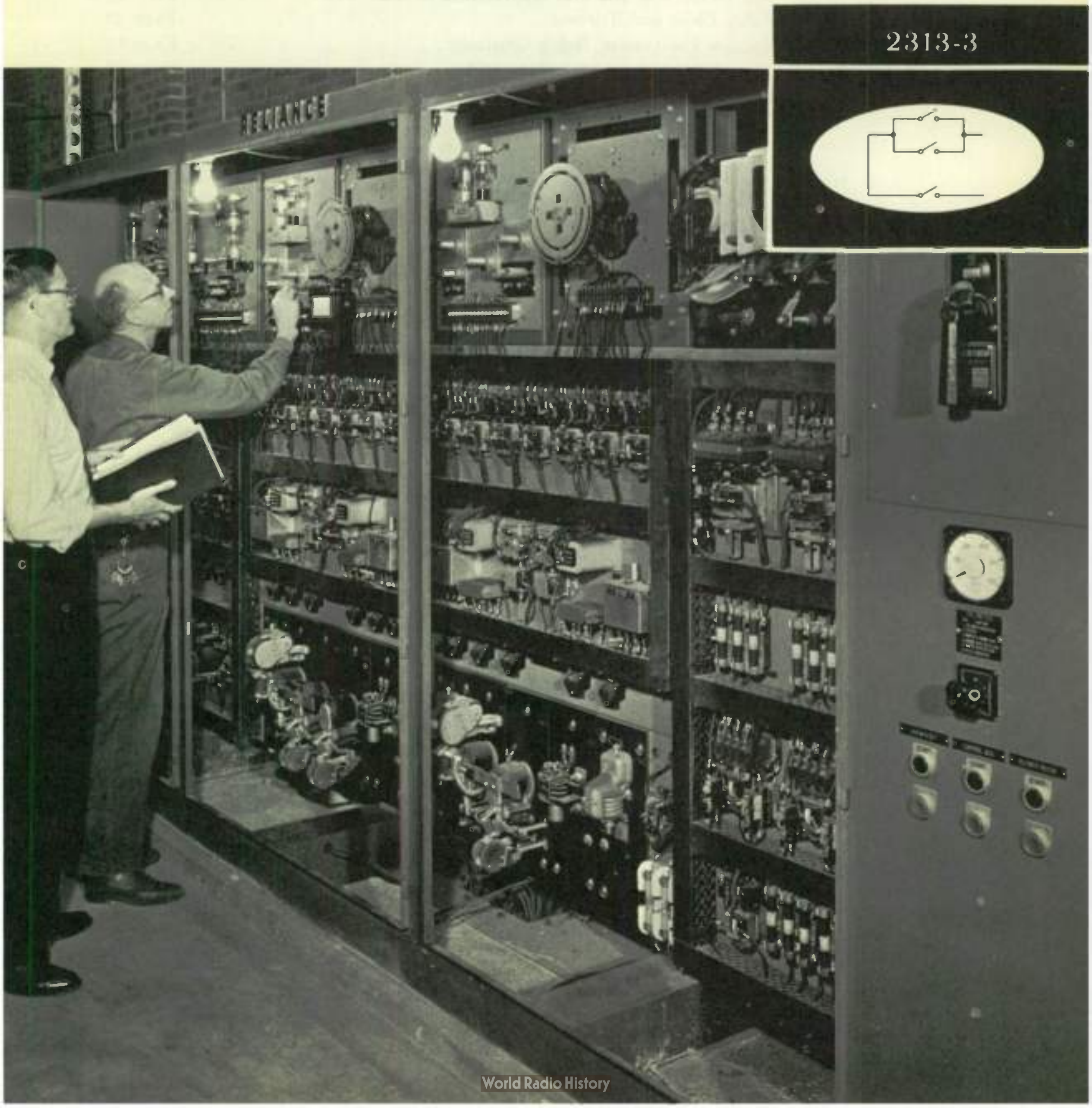

In this lesson you will learn...

Automatic factory control equipment, such as shown here, use a great many decision making circuits. Photo: Courtesy, Reliance Electric and Engineering Co.

FIRST EDITION/Fifth Revised Printing/July, 1967.

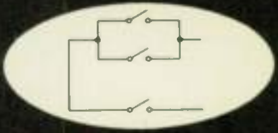

A chat with your instructor

Decision-making, or logic, circuits are combinations of automatically operating on-off devices (electronically operated switches) that are widely used in business machines, automatic control of machines, remote-control and space communications, instrumentation, and telemetry.

Equipment using large numbers of decision-making circuits are called digital computers. These are the machines "with a brain" that you hear so much about. They are used to make up your electric bill, predict what the weather will be, guide a man into space, or simply add numbers at the rate of thousands per second. Computers can translate foreign languages or tell you what is wrong with your automobile. If you are in an iron lung, a computer can keep you alive.

In most modern factories today parts and products are being manufactured with little human help, under the watchful eyes of a computer. Consider a turret drill with an automatic control unit (computers are called by many different names). A roll of punched tape (called the program) feeds through the control unit, instructing the computer in what it is to do. On the basis of these instructions, the control unit moves the workpiece to the right place for the first hole (accurately to 0.001 in.), selects the right drill size and the proper drill speed, and drills the hole to the right depth. After the first hole is drilled, the computer moves the workpiece to the proper position for the second hole, changes to a different drill size if it is needed, and repeats the operation.

Electronic digital computers use a huge number of automatic switches — many thousands within a single computer. The simplest example of an automatic switch is the relay, much used in this lesson. Transistors and diodes can also be used as switches, and they are widely used that way. Transistor and diode switching circuits will be discussed in a later lesson.

The way the many computer switches are connected with each other to obtain the desired computer action is known as *logic or decision-making circuitry*. Today, a knowledge of logic circuitry is an essential part of well-rounded electronics training.

This lesson will introduce you to some logic terminology and circuitry. Most important, you will get much practice in circuit tracing. Your success in any field of electronics depends a great deal upon your ability to trace current paths and analyze circuit action.

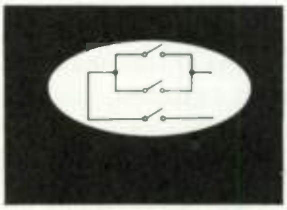

Tracing Through Decision-Making Circuits

LOGIC CIRCUITS

AND and OR circuits, now to be discussed, are the most basic and the most used of all decision-making circuitry. Although the terms are most often used with automatic switching circuits, such as relays, we shall start with manual switches, since they are the simplest to understand. The principles are the same no matter whether manual switches, relays, diodes, or transistors are used for forming the logic circuitry.

1 AND CIRCUITS WITH SWITCHES . . . In the series circuit of Fig. 1 (a) switch *A* AND switch *B* AND switch *C* must all be closed before the lamp will light. For this reason computer people call switches in series an AND circuit. The AND circuit is widely used in computers, automatic control systems, instrumentation, telemetry, and other modern electronic equipment. While Fig. 1 (a) shows three switches, any number, two or more, can be used. Anyone who rents a safe deposit box knows that it can be opened only if two keys are used — the customer's AND the banker's. It won't unlock with one key OR the other key. Both must be used. This is an analogy of an AND circuit.

2 OR CIRCUIT WITH SWITCHES . . . In Fig. 1 (b) the switches are connected in parallel. With this arrangement the lamp will light if any one (or more) of the switches A OR B OR C is closed. Switches in parallel are called an OR circuit.

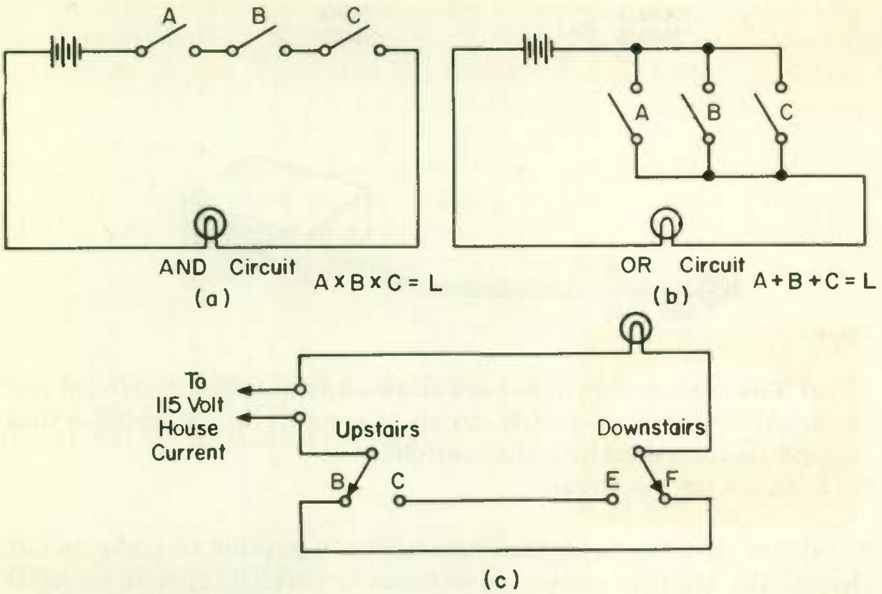

Fig. 1 Some logic circuits.

WHAT HAVE YOU LEARNED?

1. (a) John and Ron, living in adjoining rooms, agreed not to disturb each other by playing a radio when the other was studying. John used his knowledge of circuit logic to connect two switches into the radio electric cord, one in each room. When either man wanted to study, he opened his switch, and the radio could not then be turned on by the other man. Did John use an AND circuit or an OR circuit in connecting up the switches?
(b) The switches and cord are shown in Fig. 2, with one wire of the cord cut, where the switches are to be connected in. Can you wire up the circuit?

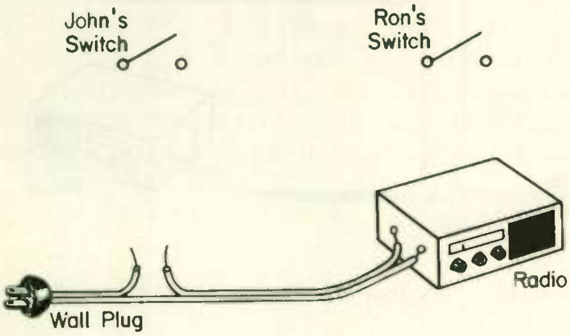

Fig. 2

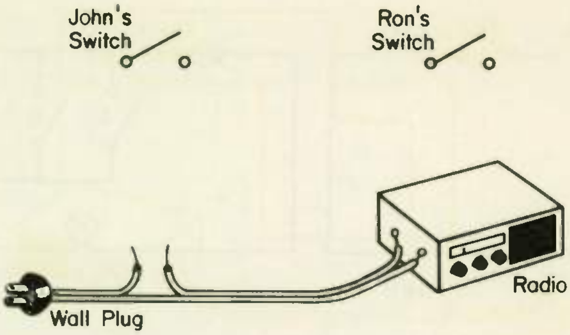

Fig. 3

2. (a) The cord and switches are shown again in Fig. 3. Would you use an AND circuit or an OR circuit to connect up the radio so that it could be turned on by either switch?
(b) Connect up the circuit.

3. (a) Are switches connected in series or in parallel to make an OR circuit? (b) Are they connected in series or parallel to make an AND circuit?

4. You probably cannot turn on the radio in your car unless the ignition key is on. Is an AND or an OR circuit used in your car for this purpose?

ANSWERS

1. (a) AND . . . Because John's switch AND Ron's switch must be closed before the radio will play.
(b)

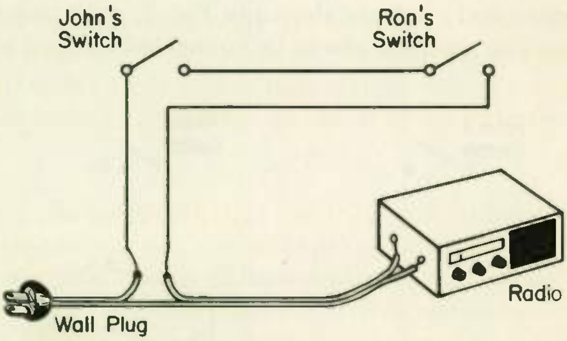

Fig. 4

2. (a) OR . . . Because if either John's switch OR Ron's switch is closed, the radio will play.

(b)

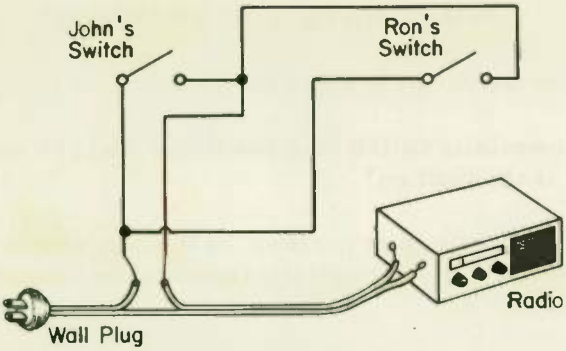

Fig. 5

Trace around the circuit to see that you have an unbroken current path when either switch is closed.
3. (a) Parallel; (b) series
4. AND . . . Both the ignition switch AND the radio switch must be on for the radio to play.

3 COMBINATION AND/OR circuits . . . Combinations of AND and OR circuits are very common. In fact, there is a good chance that you have one in your home. Most two-story houses have two switches for the stairway light, one upstairs and one downstairs. You can turn the light off or on with either one of the two switches. It is not necessary to turn the light off with the switch used to turn it on. Figure 1 (c) shows how to wire up this circuit by using two single-pole double-throw (SPDT) switches. But before you study the figure, you can have some educational fun seeing if you can draw a diagram of a circuit that will do the trick. You can have some more fun seeing if your electrical-minded friends can do it.

Notice that you can't use a simple OR circuit such as shown in Fig. 1 (b). With that type of circuit, if you turned the light on at one switch, you would have to go back to the same switch to turn the light off again. We want a circuit so arranged that if the light is turned on at, say, the downstairs switch, it can be turned off, if desired, at the upstairs switch.

The switches used in Fig. 1 (c) are called single-pole, because each switch has but a single blade (the blade is the moving part with the arrow). The switches are called double-throw, because no matter which way you snap the switch, it connects up to circuit wiring. The switches of Fig. 1 (a) and (b) are single-throw, because when in the off position, all wiring going to the switch is open. Single-pole double-throw switches are called "three-way switches" by electricians, but that name is never used in electronics.

Let's see how the circuit of Fig. 1 (c) works:

1. If the downstairs switch is in position *F* and the upstairs one in position *B*, is the light on?

2. If while you are upstairs you snap the upstairs switch, will the light be on or off? (Before going upstairs the switches were in the position of Problem 1.)

3. If in Problem 2 you left your wife downstairs in the dark when you snapped that upstairs switch, can she get the light back on by snapping the downstairs switch?

4. Suppose your wife now comes upstairs, can she turn the light off by snapping the upstairs switch?

5. Since the light is on when the switches are in positions *C* AND *E*, OR if the switches are in positions *B* AND *F*, the circuit is a combination ____________ circuit.

ANSWERS

1. Yes 2. Off . . . The switches are now in positions *F* and *C*. If you try to trace around the circuit from the 115-volt power supply, you will see that there is no closed circuit.
3. Yes . . . The switches are now in positions *C* and *E*.
4. Yes . . . The switches are now in positions *B* and *E*. 5. AND/OR

4 BOOLEAN ALGEBRA – COMPUTER SHORTHAND . . . In computer language the "shorthand" symbol for the word AND is the multiplication sign (×). For the AND circuit of Fig. 1 (a) we can write $A \times B \times C$, instead of "switch *A* AND switch *B* AND switch *C*."

For the OR circuit the symbol is the addition sign (+). So we can write $A + B + C$ for the circuit of Fig. 1 (b), instead of "switch *A* OR switch *B* OR switch *C*."

When we write $A \times B \times C$ for such a circuit as Fig. 1 (a), we have not told you what the *result* will be when all these switches are closed. Something happens as a result: the lamp lights. If we call the lamp by the letter *L*, we can say, $A \times B \times C = L$. This is shorthand for the statement "When *A* AND *B* AND *C* are closed, the lamp will light." It is an example of "computerese" (computer talk.)

This time-saving use of symbols is the basis of *Boolean* (BOO-lee-an) *algebra,* a special kind of mathematics much used in computer work and related fields of electronics. Circuits made up of AND and OR circuits are called *logic circuits.* Logic circuits are fast becoming among the most important in electronics. They are used in a large share of all electronic-controlled devices. For example, an electronic automatic machine used by a department store to keep track of customer charge purchases and send bills at the end of the month would use thousands of logic circuits.

In a previous example, we expressed what goes on in the circuit of Fig. 1 (b) by writing $L = A + B + C$ you learned that this means "Lamp L lights when switch A OR switch B OR switch C is closed." For the circuit of Fig. 1 (c) we write $L = (C \times E) + (B \times F)$, which means "Lamp L lights when switches are in position C AND E OR when switches are in positions B AND F." The parentheses are not necessary but help show the two AND circuits.

The letters, such as A, B, and C, do not always represent switches; they might mean current, signal voltages, etc. Of course, other letters of the alphabet can be similarly used.

WHAT HAVE YOU LEARNED?

1. The Boolean symbol for AND is ______, and that for OR is ______.

2. If L is a light and A and B are switches, then $L = A + B$ means ____.

3. The Boolean equation (language) describing the circuit of Fig. 6 is $L =$ ________________.

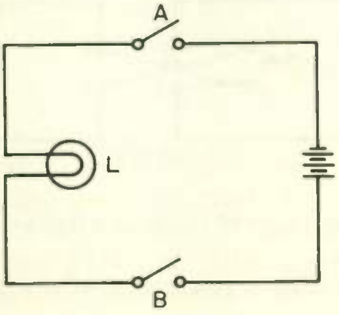

Fig. 6

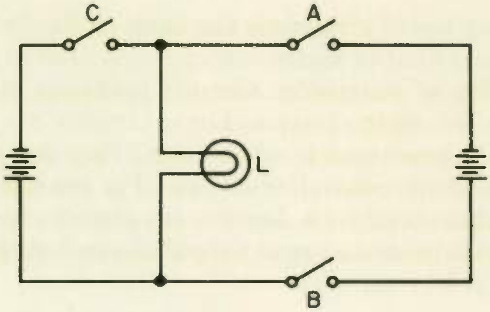

Fig. 7

4. If L is a light and A, B, and C are switches, then $L = A + (B \times C)$ means (This does not refer to Fig. 7.) ____.

5. The Boolean equation describing the circuit of Fig. 7 is ____.

6. Write in Boolean algebra: Switches M, H, and R must all be closed before door D will close. _________________________.

7. If L is a light and M, P, and Q are switches, then $L = M \times (P + Q)$ means ____.

8. Draw the circuit represented by $L = A \times (B + C)$.

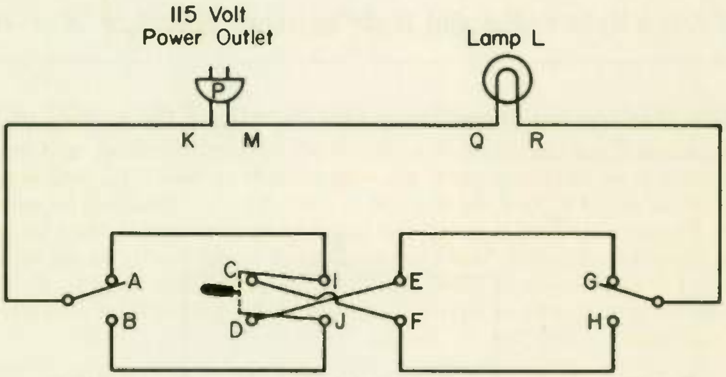

Fig. 8 Switch 1 Switch 2 Switch 3

9. Figure 8 shows a circuit for turning a light on or off at any one of three different points.
(a) To construct this circuit, you would order a __________ type switch

for switch 1, a ________ type for switch 2, and a ________ type for switch 3.

(b) If switch 1 is in position *A*, switch 2 is thrown right, and switch 3 is in position *G*, will the lamp light?

(c) If switch 1 is now thrown to position *B*, will the lamp light?

(d) Suppose next that switch 2 is thrown to the left. Will the lamp light? The other two switches are left in same position as in (c).

(e) Now suppose that someone throws switch 3 to position *H*. Will the lamp light?

ANSWERS

1. ×, + 2. The lamp *L* will light if either switch *A* or switch *B* is closed.
3. $L = A \times B$ . . . The lamp *L* will light if switch *A* AND switch *B* are closed.
4. The lamp *L* will light if switch *A* is closed, OR it will also light if switches *B* AND *C* are both closed.
5. $L = (A \times B) + C$ . . . The lamp *L* will light if switches *A* AND *B* are both closed OR it will also light if switch *C* is closed. 6. $D = M \times H \times R$.
7. Lamp *L* will light if switch *M* is closed AND either switch *P* or switch *Q* is closed.
8.

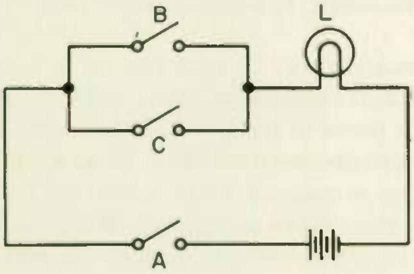

Fig. 9

9. (a) SPDT; DPDT; SPDT. (b) Yes . . . Trace from one power outlet terminal around the circuit back to the other battery terminal, and you will see that there is an unbroken path, allowing current to flow. The path is from *M* to *Q*, to *R*, to *G*, to *E*, to *I*, to *A*, to *K*. (c) No . . . Tracing the current path from *M*, you pass first through the lamp, then to switch 3, then to contact *G*, from there to contact *E*, and then to contact *I*, and finally to contact *A*. Since switch 1 is in position *B*, there is no electric path from *A* on to *K*. Therefore, the circuit is open and no current can flow in any part of it; as a result, the lamp will not light. (d) Yes. (e) no.

THE RELAY – AN AUTOMATIC SWITCH

Instead of flipping a switch by hand to turn it on or off, you can rig up an electromagnet to flip it automatically. You then have a relay.

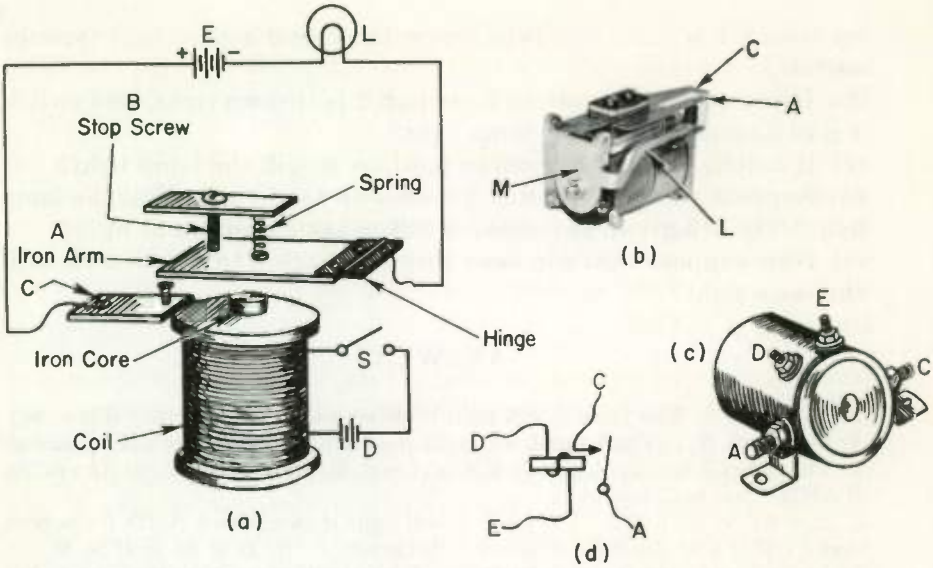

Fig. 10 **A relay is an electrically operated switch. Current through the coil in (a) pulls down the iron arm so that A connects to C. (b) and (c) are examples of commercial relays; (d) is a schematic diagram of a relay with leads attached.**

A simple homemade relay to turn the light *L* on and off is shown in Fig. 10 (a). The coil consists of many turns of insulated copper wire wound around a piece of iron, called the core. The coil with its iron core is called an *electromagnet.* The reason for this name is that the iron core becomes a magnet when a current flows in the coil of wire – that is, when the coil is *energized.* When current quits flowing in the coil – that is, when the coil is *deenergized* – the iron core loses its magnetism.

5 RELAY OPERATION ... When the switch *S,* Fig. 10 (a), is closed, current from the battery *D* flows through the coil, making a magnet out of the iron core. The magnetized iron core pulls down the iron arm *A* so that it touches the screwhead in the metal plate *C,* making an electrical connection between *A* and *C.* There is then a complete current path from the battery *E,* so that bulb *L* lights. The current flows from the negative side of *E* through the lamp, down to the iron arm *A,* through the length of the arm *A,* through the screw to contact *C,* and back to the positive side of battery *E.*

When switch *S* is opened, current no longer flows through the coil, and the iron core is no longer a magnet. The spring then pulls up the iron arm, breaking the electric circuit, and light *L* goes off. When current flows in the coil, pulling the iron arm down, the relay is said to *operate.* When the current is cut off, letting the iron arm spring away from the core, the relay is said to *release.*

6 USING RELAYS TO SWITCH HEAVY CURRENTS . . . In the simple example shown in Fig. 10, the relay is of no advantage. It is true that the switch for light *L* is opened and closed automatically; but first another switch, *S,* must be opened and closed by hand. One might as well throw the relay away and use switch *S* to directly cut the light on and off.

As an example of a circuit in which a relay is an advantage, consider the starting circuit of your car. The starting motor draws a very heavy current (up to several hundred amperes). A hand-operated switch to carry so much current would be heavy and require considerable force to open and close. So that your starter motor can be cut in with only a light twist of your fingers on the starting switch, all modern cars use a relay. Imagine a starting motor in place of light *L* in Fig. 10 (a) and the dashboard starting switch in place of switch *S,* and you have the circuit. It takes only a small current to magnetize the iron core of the relay, so the dashboard switch can be small and easy to operate. The relay contacts can be designed to carry the heavy starting current of the motor. You can find the starting relay for your car under the hood. It looks like Fig. 10 (c). The small terminals *D* and *E* are the coil terminals, and *A* and *C* are the contact terminals, made big to carry the heavy current.

The relay shown in Fig. 10 (b) is typical of relays used in electronics. The photo is half actual size. Relays used in electronics are much smaller than the automobile-starter relay, because they carry much smaller currents. In Fig. 11 you can see how small some relays get. Some pieces of electronic equipment have hundreds of relays.

The relays in Fig. 10 open and close a single set of contacts. They are therefore single-pole single-throw (SPST) relays. The symbol for a SPST relay is shown in Fig. 10 (d). The movable arm that opens and closes the contacts is called the *armature.* The armature in Fig. 10 (b) is *M.* When the coil is energized, the armature is pulled to the coil, raising arm *L,* which in turn pushes contact *A* against contact *C.*

7 CONTROLLED CIRCUITS AND CONTROLLING CIRCUITS . . . A relay is an electrically operated switch. With an ordinary switch we *control* a circuit (that is, cut it on or off as we want) by flipping a switch by hand. A circuit is controlled with a relay by current fed to

Fig. 11 Dice-cube-size miniature relays used in equipment where weight and space are at a premium. (Courtesy: Hi-G, Inc.)

the relay coil. This current is called the *controlling current.* In Fig. 10 (a) the controlling circuit is the circuit made up of the switch S and battery D. The *controlled circuit* consists of the battery E and light L. The *controlling circuit* tells the controlled circuit what to do. If in Fig. 10 (a) the controlling circuit wants light L to go on, switch S is closed.

Every relay evidently has at least two circuits, the controlled circuit and the controlling circuit. Since only a small amount of current is needed through the coil to operate the relay, a small amount of current can boss around a big current in the controlled circuit, as you have seen in the case of the starting motor. As another example, the current flowing in the relay coil of a radio-controlled garage door opener that results from the car signal is about 2000 times smaller than the controlled-circuit current of the relay, which runs the door motor.

WHAT HAVE YOU LEARNED?

1. When switch S is closed in Fig. 10(a), the relay coil is said to be (a) ________________. As a result, the armature is pulled toward the coil and the relay is said to (b) ________________. Light L goes off when the relay (c) ______________.

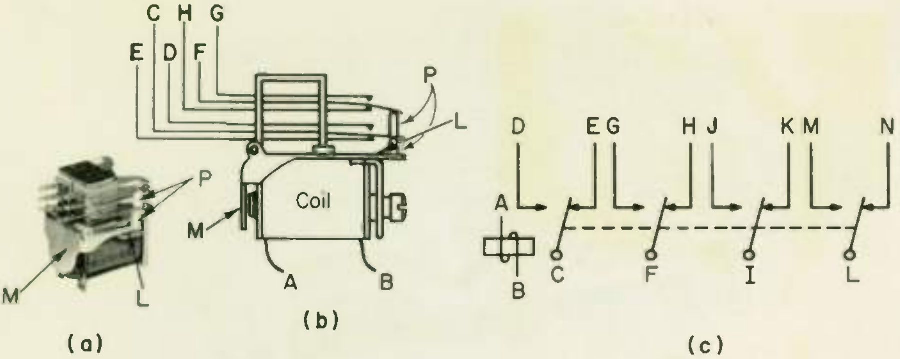

Fig. 12 **A four-pole double-throw relay.**

2. The armature in Fig. 10(a) is the part labeled ________.

3. In Fig. 10(d) you would hook up the controlling current to leads (a) ________ and ________ and the controlled current to leads (b) ________ and ________.

ANSWERS

1. (a) energized; (b) operate; (c) releases 2. *A* 3. (a) *D, E*; (b) *C, A*

8 RELAY POLES AND THROWS . . . Relays, like switches, come in various combinations of poles and throws. The relay of Fig. 12 is four-pole double-throw. In Fig. 12(b), you see only two poles (the movable blades *C* and *F*) because the other two are on the other side of the relay, directly behind the ones shown, and therefore not visible. Figure 12(b) shows the contact positions when the coil is not energized. *E* makes contact with *C* to close one circuit, and *F* makes contact with *H* to close another circuit. In the symbolic diagram (c) you can also see that *I* connects with *K* and *L* with *N* to close two more circuits.

When the coil is energized by feeding current to *A* and *B*, armature *M* in Fig. 12(b) pulls up against the iron core. This pushes up lever *L*, which in turn pushes up contacts *C* and *F*—and also *I* and *L* not shown in (b)—by means of the insulating spacers *P*. When the coil is energized, the poles *C, F, I,* and *L* of (c) are pulled to the left (the dashed line is used to show that they all work together). Then *C* makes contact with *D, F* with *G, I* with *J,* and *L* with *M,* closing four circuits.

The relay of Fig 12 is double-throw because it closes circuits in both the energized and nonenergized positions. It is four-pole because it closes four sets of contacts at one time, making it possible to cut in

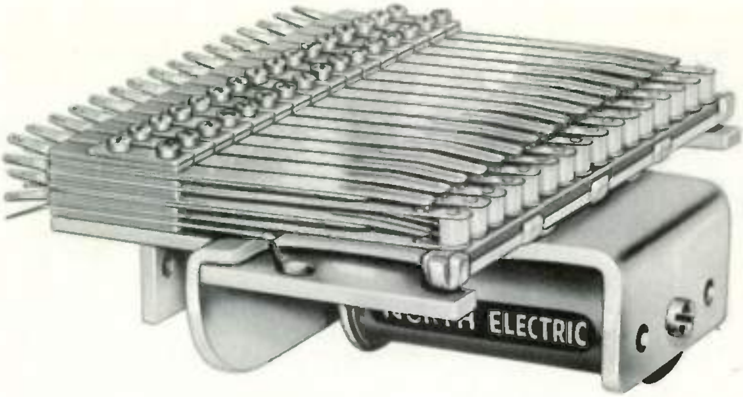

Fig. 13 A 32-pole single-throw relay. Multiple-pole relays are used in computers, sorting and punching machines, industrial controls, and similar applications. (Courtesy: North Electric Company)

four separate circuits at a time. Some relays have a great many poles. The one in Fig. 13 is a 32-pole single-throw relay.

9 NORMAL POSITION OF RELAY CONTACTS . . . When you order a single-throw relay, you must specify whether you want the contacts *normally closed* (NC) or *normally open* (NO). The "normal" position of the contacts is their position when the coil is not energized. In schematic diagrams, contacts are usually shown in the normal position. In Fig. 14(a) the contacts are normally closed, because *A* is connected to *B* when the coil is not energized. When current flows through the coil in (a), contact *A* is pulled in toward the coil, so that *A* no longer makes electrical connection with *B*.

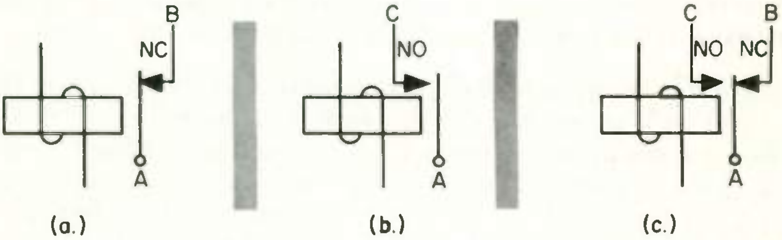

(a.) (b.) (c.)

Fig. 14 If relay contacts are together when no current is in the coil, they are normally closed; if apart when no current is in the coil, they are normally open.

The normally open type of single-throw relay is shown in Fig. 14(b). When no current flows in the coil, *A* is not connected to *C*. The homemade relay of Fig. 10(a) is a single-throw relay of the normally open type. Since a double-throw relay has both NO and NC contacts, Fig. 14(c), double-throw relays are not classified as NC or NO. A relay can be classified as NC or NO only if *all* of its contacts are either NO or NC.

WHAT HAVE YOU LEARNED?

1. A relay with five movable contacts, five normally open contacts, and five normally closed contacts is a ____________ pole ____________ throw relay.

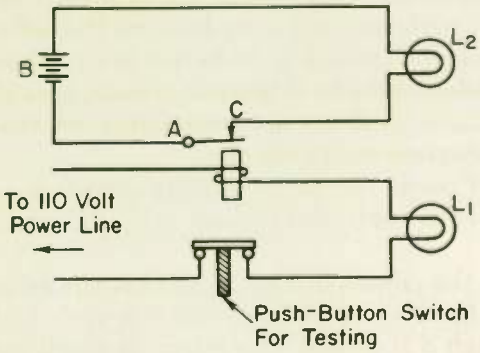

Fig. 15

2. If for any reason light L_1 Fig. 15 should go off, light L_2 (powered from the emergency battery B) will automatically come on. This circuit is used where it is important to have lights at all times, as in a hospital operating room.

(a) If you were asked to build this circuit, specify the type of relay you would order (number of poles and throws, and whether NO or NC).
(b) When light L_1 is on, are the relay contacts in their normal position?
(c) Does light L_2 burn when the relay is energized?
(d) If light L_1 burns out, explain step by step what would happen.
(e) A push-button switch, such as that shown in Fig. 15, has a spring so that it always returns to its original position when your finger is removed. For the testing switch shown, would you order an NO or NC switch?
(f) When you push the push-button switch for testing, light L_1 goes off, but light L_2 does not come on. Which of the following might be the trouble? (More than one might be.)
(1) Push-button switch is faulty.
(2) Battery B is dead.
(3) Wire in coil of relay is broken.
(4) Contact C is badly burned, so it does not make electrical connection to A.

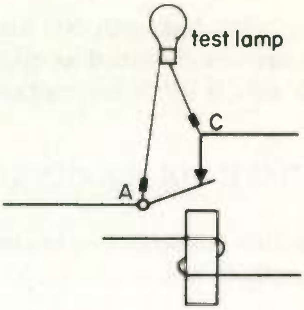

Fig. 16

(g) The relay contacts in Fig. 15 can be tested to see if they are making electrical contact with each other by holding the terminals of a test lamp between *A* and *C*, as in Fig. 16 (a test lamp is just a small light bulb with test leads attached). While this is done, should the push button be pressed? ________. If the test lamp lights, are the contacts making electrical connection with each other? ______.

(h) The source of power for the controlling current is ______________ ________, and for the controlled current ______________________.

3. (a) Complete the circuit in Fig. 17 so that the relay will connect the antenna to the receiver when switch *S* is open and to the transmitter when switch *S* is closed. This circuit is much used at two-way stations, because it makes it possible to use the same antenna for both receiving and transmitting. The switch *S* is frequently mounted on the microphone, being pressed closed when the microphone is picked up.

(b) What type of relay would you order if you wanted to build this circuit?

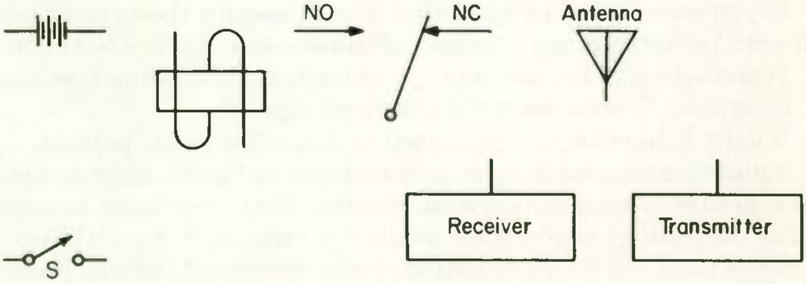

Fig. 17

ANSWERS

1. Five-pole double-throw
2. (a) SPST (NC) (single-pole single-throw normally closed) . . . It is a single-throw relay because it closes contacts in only one position (when the coil is not

energized). It is normally closed because the contacts are closed when no current flows in the coil. You can tell from the diagram it is an NC switch because diagrams show normal contact positions unless otherwise stated or implied.
(b) No . . . When light L_1 is on, current flows in the coil and opens the contacts. The normal position of the relay contacts is their position when the coil is not energized.
(c) No . . . Current through the coil pulls in the armature, opening the contacts.
(d) Current will no longer flow through the relay coil, so the relay contacts will close. Current from the battery will then flow through light L_2.
(e) NC . . . A switch is normally closed if it is closed at all times except when it is pressed. Unless this switch is normally closed, light L_1 can not burn.
(f) (2) or (4) . . . If the push button were faulty, light L_1 could not be on before testing and go off when testing. If a wire were broken in the coil, current could not get to L_1 when not testing, because current to L_1 must flow through the coil.
(g) Yes, no . . . Since we want to test to see if the contacts are making electrical connection when they are supposed to be closed, we must test with the contacts in the closed position. If the test lamp lights, it shows current flows from top terminal of the battery through L_2, through the test lamp and back to the other side of the battery. Hence all the circuit except *A*-*C* must be O.K. If *A* were making contact with *C*, the current would flow through *A*-*C* rather than through the higher resistance of the lamp.
(h) 110-volt power line, battery *B*.
3. (a)

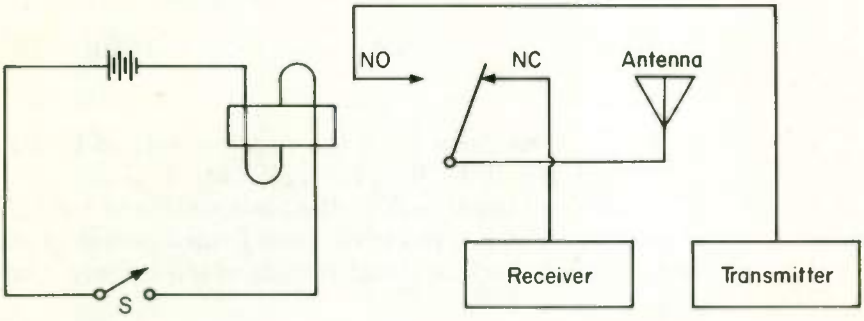

Fig. 18

(b) A single-pole double-throw relay . . . It is single-pole because it cuts in only one circuit at a time, and it is double-throw because it cuts in a circuit both when the relay is energized and when it is not.

10 CIRCUITS WITH MORE THAN ONE RELAY . . . Closing one relay in an electronic circuit will often energize another relay and cause it to close in turn. Figure 19(a) is a circuit of this type. By answering the following questions you will understand how the circuit works.

WHAT HAVE YOU LEARNED?

1. When switch *S* Fig. 19(a), is open, the relay contacts are as shown

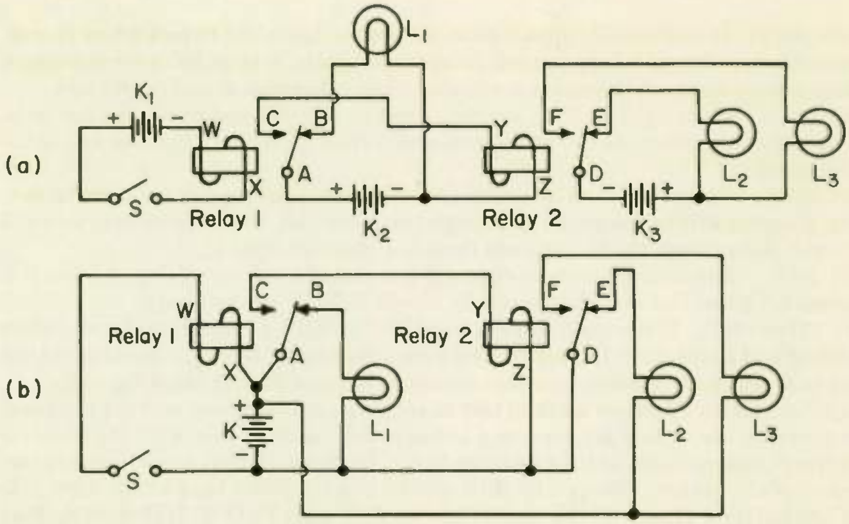

Fig. 19 One relay can operate another.

in Fig. 19(a). Contacts *A* and *B* are together and contacts ________ and ________ are together.

2. When *S* is open, bulbs ________ and ________ are lit. (Skip steps 3 and 4 if you get this one right.)

3. When *S* is open, current flows from the negative side of battery (a) ________ up through bulb L_1, then through contacts (b) ________ and ________, and from there back to the positive side of the battery. There is thus an unbroken electrical path from one side of the battery, through the bulb, back to the other side of the battery. Consequently, bulb (c) ________ is lit.

4. When *S* is open, current flows from the negative side of battery K_3 up through bulb (a) ________, then through contacts (b) ________ and ________, and from there back to the positive side of the battery. Consequently, bulb (c) ________ is lit.

5. When switch *S* is closed, current from battery (a) ________ will flow through the coil of relay (b) ________. This will cause contacts (c) ________ and ________ to close, and contacts (d) ________ and ________ to open. Consequently, bulb (e) ________ will no longer burn, because contacts *B* and *A* must be closed in order to have an unbroken electric circuit through this bulb from one side of battery (f) ________ to the other.

6. Because contacts *C* and *A* close when switch *S* is closed, current will

flow from the negative terminal of battery ______ through the coil of relay 2, and back to the positive side of the battery by way of closed contacts *A* and *C*.

7. Because relay 2 is energized, contacts (a) ______ and ______ will close and contacts (b) ______ and ______ will open. Light (c) ______ will then come on and light (d) ______ go off.

ANSWERS

1. *D, E* 2. L_1, L_2 3. (a) K_2; (b) *B, A;* (c) L_1
4. (a) L_2; (b) *E, D;* (c) L_2 5. (a) K_1; (b) 1; (c) *C, A*; (d) *B, A;* (e) L_1; (f) K_2
6. K_2 7. (a) *F, D;* (b) *E, D;* (c) L_3; (d) L_2

11 USING ONE BATTERY TO DO MORE THAN ONE JOB . . . It is not necessary to have three separate batteries as shown in Fig. 19(a). Figure 19(b) is the same circuit as that of (a), except that a single battery, *K*, is used to run everything. To see how it works with a single battery, go through the seven steps above once more, this time looking at Fig. 19(b). The text and answers to blanks will be exactly the same, except that K_1, K_2, and K_3 should each be changed to read K.

WHAT HAVE YOU LEARNED?

1. Do the relays in Fig. 19(b) close at exactly the same time?

2. In Fig. 19(a) lights L_1 and L_2 are lit and L_3 is out, both when switch *S* is closed and when it is open. Which of the following are possible troubles? (More than one may be the correct answer.)
(a) Battery K_1 is dead.
(b) Wire is broken in the coil of relay 2.
(c) Battery K_2 is dead.
(d) Contact *D* is stuck to contact *E*, so that the two cannot separate when relay 2 is energized.
(e) Wire is broken in the coil of relay 1.

3. In Fig. 19(b) when the switch is open, light L_1 is on but L_2 is not. When the switch is closed, light L_1 goes off and light L_3 comes on. Which of the following might be the trouble? (More than one might be.)
(a) Battery *K* is dead.
(b) Wire is broken in the coil of relay 2.
(c) Light L_2 is burned out.
(d) Contacts *A* and *B* are stuck together.
(e) Contacts *D* and *E* are stuck together.

4. In Fig. 19(b) bulbs L_1 and L_2 light when the switch is open. When the switch is closed, L_1 goes out and L_2 continues to burn. Bulb L_3 is out when the switch is open or closed. Which of the following are possible causes of the trouble?
(a) Light L_3 is burned out.
(b) Wire is broken in coil of relay 2.
(c) Contacts *D* and *E* are stuck together.
(d) Switch *S* is defective.
(e) Contact *C* is burned and pitted, so it does not make electrical contact with *A* when relay 1 operates.

5. Refer to Problem 4. Between what points would you connect a test lamp in order to narrow down the number of possible causes of the trouble?
(a) Between *W* and *X*.
(b) Between *Y* and *Z*.
(c) Between *E* and *D*.

6. Refer to Problems 4 and 5. If the test lamp does *not* light when held between *Y* and *Z*, which one of the selections of Problem 4 is the trouble? If the test lamp lights, what is the trouble?

7. In Fig. 20 what lamps will burn when switch *S* is open?

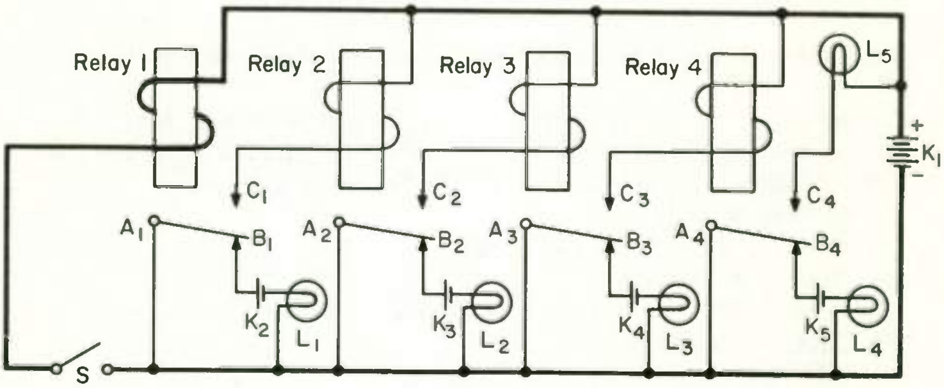

Fig. 20

8. In Fig. 20, the first thing that will happen when switch *S* is closed is that relay number ______ will be energized. (To help you on this one, the unbroken current path when switch *S* is first closed, from negative terminal to positive terminal of battery K_1 is shown by a heavy line.)

9. Since relay 1 is energized, contacts (a) ______ will open and con-

tacts (b) ____________ will close. Current will then start to flow through the coil of relay (c) ________. Will the current continue to flow through relay 1? (d) ________ Will light L_1 continue to burn? (e) ________

10. When relay 2 operates, light ________ will go off and relay ________ will be energized.

11. When relay 3 operates, light ________ will go off and relay ________ will be energized. After this happens, will lights L_1 and L_2 be off or on? ________.

12. When relay 4 operates, light (a) ______ will go off and light (b) ______ will come on. No further action will take place as long as switch S is closed. Lights (c) ____________ are now off and light (or lights) (d) ____________ are now on. Relays (e) ____________ are energized.

13. When switch S is opened, will all the relays become deenergized at exactly the same time? ________. If not, describe the action that will take place.____.

14. When switch S is opened, which one of the bulbs, L_1, L_2, L_3, or L_4, will light up first? ________.

15. When switch S is opened, will light L_5 go out before light L_3 comes on? __________.

16. If when switch S, Fig. 20, is closed, lights L_1 and L_2 go off while L_3 and L_4 stay on, which of the following might be the trouble? (More than one might be.) ____________
(a) Wire is broken in the coil of relay 2.
(b) Wire is broken in the coil of relay 3.
(c) Wire is broken in the coil of relay 4.
(d) Contact C_1 is pitted and burned.
(e) Contact C_2 is pitted and burned.
(f) Contact C_3 is pitted and burned.
(g) Armature of relay 3 is stuck.

ANSWERS

1. No . . . Relay 1 has to close before any current goes to the coil of relay 2. Consequently, relay 2 cannot close until after relay 1 has closed.
2. (a) or (e) . . . Relay 1 is evidently not working properly; if it were, closing switch S would close contacts A-C and open contacts A-B. Then light L_1 would go off and it doesn't. If battery K_1 were dead, the relay would not operate, nor

would it operate if the coil wire were broken. All other troubles listed pertain to parts of the circuit that do not go into action until after relay 1 operates. Since relay 1 has not operated, there is nothing to indicate that these parts of the circuit have anything wrong with them.

3. (c) . . . Since the circuit works normally except that bulb L_2 is not lit when it should be, it is likely that this bulb is burned out. If battery *K* were dead, none of the lights would burn at any time. If a wire were broken in relay 2, that relay would not operate, and light L_3 would not come on. If contacts *D* and *E* were stuck together, *D* could not break away from *E* to make contact with *F;* consequently, L_3 could not come on.

4. (b), (c), or (e) . . . Relay 2 is evidently not operating, because L_2 burns and L_3 is out at all times. This could be because a wire is broken in relay 2, because *D* is stuck to *E* and won't break away under the pull of electricity flowing through the coil of relay 2, or because no current is getting to relay 2. For current to get to relay 2, contact *A* must make electrical connection with *C*. We know that relay 1 is operating, because L_1 goes out when *S* is closed. However, contact *C* may be so badly burned or pitted that electricity can't flow from *D* to *A* even though the two contacts are pulled in together. If switch *S* were defective, nothing would happen when the switch was closed. There is no reason to suspect that L_3 is burned out, because L_2 must go off before L_3 can come on.

5. Between *Y* and *Z* . . . That will show us whether current is getting to coil *Y-Z* or not. We know that current is getting to *W-X,* since light L_1 goes out when *S* is closed. Holding the test lamp between *D* and *E* would enable us to tell if *E* was making electrical connection with *D,* but we know it is as otherwise light L_2 could not burn.

6. (e) . . . If the test lamp does not light, no current is getting to the coil of relay 2. This would be the case if *A* is not making electrical contact with *C*. If the test lamp lights, contacts *A-C* are O.K., so the trouble must be one of the other two possible ones.

7. Lamps L_1, L_2, L_3, and L_4 . . . Each has its own battery, and as long as the *A* contacts are in the down position, there will be an unbroken electrical circuit through each bulb from one side of the associated battery to the other.

8. 1 9. (a) A_1-B_1; (b) A_1-C_1; (c) 2; (d) yes; (e) no 10. L_2, 3

11. L_3, 4, off . . . Current still flows through the coils of relays 1, 2, and 3, keeping contacts A_1, A_2, and A_3 in the up position. Consequently, lights L_1 and L_2 will stay off.

12. (a) L_4; (b) L_5; (c) L_1, L_2, L_3, and L_4; (d) L_5; (e) 1, 2, 3, and 4.

13. No . . . Opening the switch deenergizes relay 1. Contact A_1 then drops down, deenergizing relay 2. Contact A_2 then drops down, deenergizing relay 3. Contact A_3 then drops down, deenergizing relay 4.

14. L_1 . . . Contact A_1 drops down first, making contact with B_1 so that L_1 comes on.

15. No . . . L_3 comes on when A_3 drops down. Light L_5 will not go out until later when A_4 drops down.

16. (b), (e), or (g) . . . Relays 1 and 2 must have operated, because lights L_1 and L_2 went off. Relays 3 and 4 did not operate, because lights L_3 and L_4 stayed on. It is understandable why relay 4 did not operate, since it cannot close until relay 3 closes. The closing of relay 2 should have caused relay 3 to close. Since it did not, the trouble is in the action that takes place between the energizing of relay 2 and the energizing of relay 3. Relay 3 would not close if there was a break in its coil wire or if its armature were stuck so contact A_3 would not pull up. If contact C_2 were badly pitted or burned, relay 3 would not be energized, because current could not get from contact A_2 to C_2.

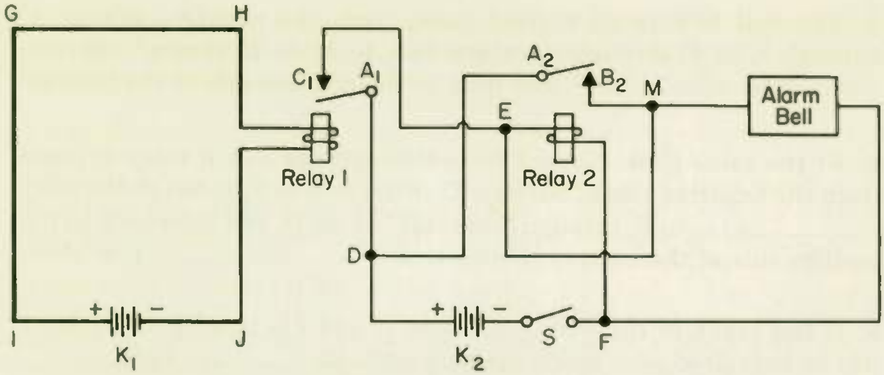

Fig. 21 A simple burglar alarm system. The contacts of relay 1 are shown in their energized position.

12 RELAY APPLICATION: THE BURGLAR ALARM . . . Why would you want one relay to control other relays as in Figs. 19 and 20? One answer is the burglar alarm system of Fig. 21. The wire *GHIJ,* shown in the figure by the heavy line, is run around the inside of the building, across all doors and windows, so that it is impossible to enter the building through a door or window without opening the circuit by which battery K_1 feeds current to the coil of relay 1. The switch *S,* inaccessible to the burglar, is closed at night, putting the alarm system on the job. If anyone enters a door or window while *S* is closed, the alarm bell starts to ring. Having set the alarm off, the burglar can't stop it ringing by quickly closing the door by which he entered, so as to close the circuit again. Switch *S* must be opened in order to stop the alarm bell after it has once started ringing. The following Questions will show you how the circuit works:

WHAT HAVE YOU LEARNED?

1. During normal operation at night, current from battery K_1 (a) *(does) (does not)* flow through relay 1. Because relay 1 is energized, contact (b) ________ is pulled down so that contact A_1 does not touch contact (c) ________. The drawing shows the position of these contacts for when relay 1 is energized.

2. If the wiring is broken between *G* and *I,* current no longer flows through relay (a) ________, so that contacts (b) ________ and ________ now come together.

3. The bell now rings, current going from the negative side of K_2 through *S,* to *F,* through the alarm bell, to *M,* to *E,* through contacts ______ and ______ , to *D,* and back to the positive side of the battery.

4. At the same time, current flows through the coil of relay 2, going from the negative side of battery K_2 through *S* to *F,* through the relay (a) ____________ to *E,* through contacts C_1-A_1 to *D,* and then back to the positive side of the battery. Contacts (b) ______ and ______ now close.

5. If the break in the wiring between *G* and *I* is now closed, relay 1 will be energized once more, opening contacts (a) ______ and ______ . Will this cause contacts A_2-B_2 to next open? (b) ______ . (If you answer this correctly, omit the rest of the steps.)

6. In step 4 relay 2 was energized by closing contacts C_1-A_1. But after contacts A_2-B_2 close as a result of relay 2 being energized, there is another path by which current can get to the coil of relay 2. The path is from the negative side of battery K_2 through *S* to *F,* through the coil of relay 2, to *E,* to *M,* through contacts ______ and ______ , to *D,* and back to the positive side of the battery.

7. Because there is another path by which current can get to relay 2, relay 2 will continue to be (a) ________ , even after contacts A_1-C_1 are open. Hence, contacts (b) ________ stay closed whether or not contacts A_1-C_1 stay closed. The alarm bell (c) *(continues to ring) (shuts off)* when contacts A_1-C_1 open.

8. If the break between *G* and *I* is closed, contacts C_1-A_1 will open and the alarm bell will continue to ring. If switch *S* is now opened, current can no longer get to the coil of (a) ____________ . Contacts (b) ______ will open. The alarm bell will (c) ____________ .

9. If switch *S* is next closed again, relay 2 (a) *(will) (will not)* be energized again because contacts A_2 - B_2 are open. Will the alarm bell start to ring again? (b) ____________ .

ANSWERS

1. (a) does; (b) A_1; (c) C_1 2. (a) 1; (b) A_1, C_1 3. A_1, C_1
4. (a) Coil; (b) A_2, B_2 5. (a) C_1, A_1; (b) no 6. A_2, B_2
7. (a) Energized; (b) A_2-B_2; (c) continues to ring
8. (a) Relay 2; (b) A_2-B_2; (c) shut off 9. (a) Will not; (b) no

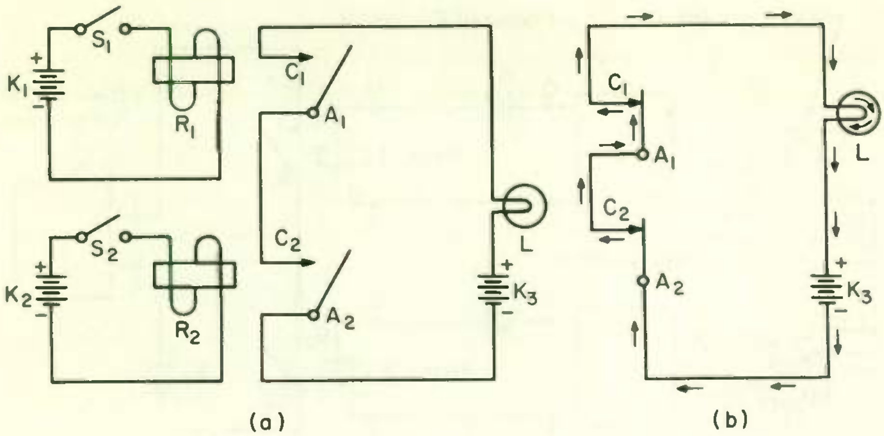

Fig. 22 Two relays connected to form an AND logic circuit.

LOGIC CIRCUITS WITH RELAYS

13 AND CIRCUIT WITH RELAYS . . . In Fig. 22(a) both relays must be energized and operate before lamp L will light. We write this in Boolean algebra as

$$R_1 \times R_2 = L$$

which means "If both relay R_1 AND relay R_2 are energized, then lamp L will light."

This means that when both switches S_1 and S_2 are closed, the bulb will light. The electric circuit to the lamp is then as shown in Fig. 22(b). If either one of the relays is not energized, the lamp L will not light.

14 A ROBOT FOR ROVER . . . Can you design a robot that will open the basement door if Rover wants to come in AND if the temperature outside is below 40°? Two devices will be needed to operate the relays. One contains a photocell with amplifier and a lamp located close to the door, like the setup used to open the doors of some supermarkets when a customer walks into the beam of light. This will energize one relay as soon as the dog comes near the door. The other device must energize the second relay when the temperature is less than 40°. A thermostat adjusted to close its contacts when the outdoor temperature is lower than 40° will take care of this problem.

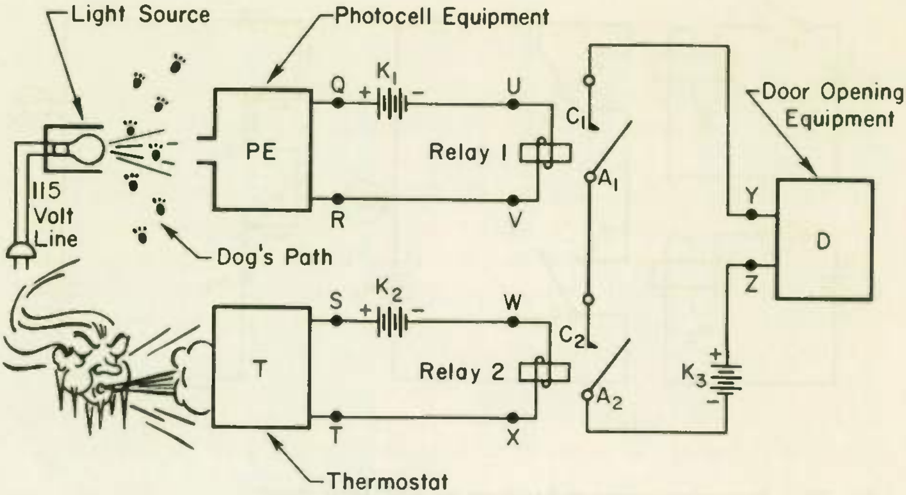

Fig. 23 An AND circuit to let the dog in the house.

Figure 23 shows the circuit, and you will see that it is like the AND circuit of Fig. 22 except that the photocell (with its amplifier), marked *PE*, replaces switch S_1, and the thermostat, marked *T*, replaces switch S_2. Instead of a light bulb, the relay contacts turn on the motor that opens the door. It is necessary for both the photocell *PE* AND the thermostat *T* to "switch on" before the relay contacts will open the door. In computer language, $PE \times T = D$. In dog language, I'm on the beam, and I'm cold; lemme in.

This is a robot that "makes decisions." It has a very limited brain, one with only two cells. One cell (relay) takes note of whether the temperature is above or below 40°. The other notes whether the dog wants in or not. On the basis of these two "bits" of information the robot makes a decision whether to let the dog in or not. The difference between a giant computer and this simple one is that the giant has thousands of cells, rather than just two, and consequently has a great many bits of information from which to make a decision.

While the robot just designed may be a simple Simon, he may make better decisions than a human would. If it looked cold outside and you were happy with the world, you would probably make a decision to let the dog in. On the other hand if you were in an ugly mood, you might decide to keep the dog out, even though it was freezing cold outside. Our robot will not treat the dog differently one day than another. Computers always make consistent decisions; humans do not.

1. What type of relays (number of poles, throws, and whether NC or NO) would you order to construct the circuit of Fig. 23?

2. The circuit of Fig. 23 is faulty, not opening the door at any time. You think the trouble may be in the door-opening equipment. You therefore want to see if current is getting to the door-opening equipment when it should. To do this you wait until the temperature is below 40°. You then have the dog stand in front of the photocell while you hold a test lamp between points ______ and ______.

3. Refer to Problem 2. If the test lamp lights, is the door-opening equipment faulty, or is the trouble in some other part of the circuit?

4. You want to perform the test of Problem 2 when the weather is warm. For this purpose, you must have current from battery K_2 reach the coil of relay 2 even though current cannot get through the thermostat because it is too warm. You do this by holding a piece of copper wire between points ______ and ______. There should then be an unbroken conductive circuit from the negative side of the battery through relay 2, back to the positive side of the battery. Contacts A_2 and C_2 will then be pulled together. Is it now necessary to have the dog (or some other object) in front of the photocell while holding the test lamp between *Y* and *Z*? ______

5. Refer to Problem 2. The test lamp does not light when held across *Y-Z*. By visual observation you notice that contact A_2 is not being pulled in to contact C_2 even though the temperature is below 40°. You next hold the test lamp between points *W* and *X*. The test lamp lights. What is likely the trouble?

ANSWERS

1. Two SPST (NO) relays are needed.
2. *Y* and *Z* . . . Since the temperature is below 40° and the dog is standing in front of the photocell, both relays should be energized. Therefore, both relay contacts should be closed and a test lamp across *Y* and *Z* should complete a circuit.
3. Door-opening equipment is faulty . . . The lighting of the test lamp shows that current is getting to *Y* and *Z*; therefore, all of the intermediate equipment must be operating properly. All that is left is the door-opening equipment.
4. *S, T, yes* . . . With a wire between *S* and *T*, current can flow from the negative side of the battery, through the relay, over to *T*, from *T* to *S* through the copper wire, and back to the positive side of the battery. But to get current to *Y-Z*, both relay 1 *A*ND relay 2 must be closed. The wire between *S* and *T* closed

relay 2. Something is needed in front of the photocell to close relay 1.

5. The wire in the coil of relay 2 has a break in it . . . Current is apparently not going through the coil, because, if it were, the relay would operate. Since the test lamp shows the voltage exists at the terminals of the coil, the trouble is likely an opening in the wire of the coil.

15

OR CIRCUIT WITH RELAYS . . . Two relays connected to form an OR circuit are shown in Fig. 24. If either one of the two relays is energized, or if both are energized, light L will come on. Computer engineers write it like this:

$$R_1 + R_2 = L$$

which means "If either relay 1 OR relay 2 is energized, or if both are energized, light L comes on."

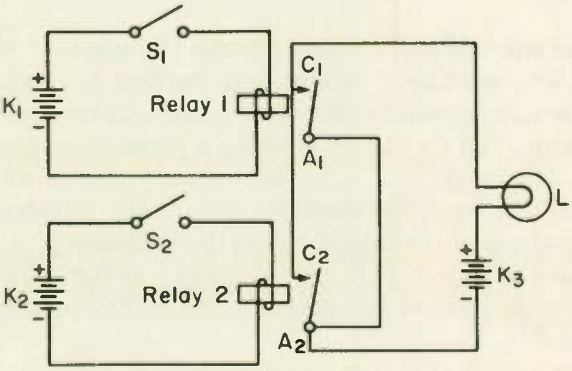

Fig. 24 An OR logic circuit.

WHAT HAVE YOU LEARNED?

1. In Fig. 24 if switch S_1 is closed and S_2 is open, will light L burn?

2. Assuming S_1 closed and S_2 open, draw a heavy line on Fig. 24 to show the path of the current from the negative terminal of battery K_3 through the bulb, and back to the positive terminal of K_3.

3. The light in Fig. 24 comes on as it should when switch S_1 is closed, but it will not come on when S_2 is closed, S_1 being open. Which of the following may be the trouble? (More than one may be.)

(a) Battery K_2 is dead.
(b) Battery K_3 is dead.
(c) Switch S_2 is faulty.
(d) Contact C_1 is badly pitted or burned.
(e) Wire is broken in winding of relay 1.

1. Yes . . . This is an OR circuit, so if either switch is closed, the light will come on.
2.

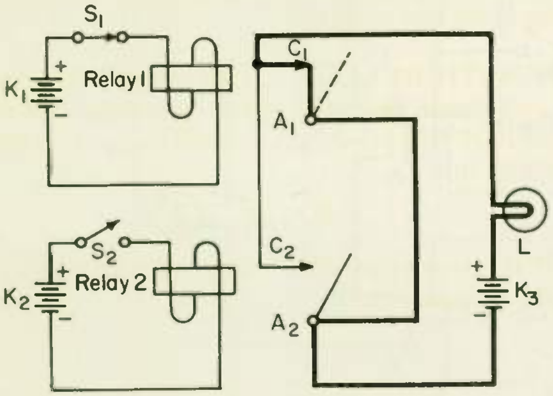

Fig. 25

3. (a) or (c).

16 NOT LOGIC CIRCUITS

NOT LOGIC CIRCUITS . . . We can describe how the circuit of Fig. 26(a) works by writing

$$R = L$$

which means "When relay R is energized, light L is on." When the switch is closed, light L will come on; when S is open and the relay not energized, the light is off.

We can describe how the circuit of Fig. 26(b) works by writing

$$\bar{R} = L$$

where the bar above the letter R indicates that relay R is NOT energized. This Boolean equation means "When relay R is NOT energized, light L is on." This circuit is a NOT logic circuit, because the light is on when the relay is NOT energized. When light L is on, switch S is open. If switch S is closed, light L will go off.

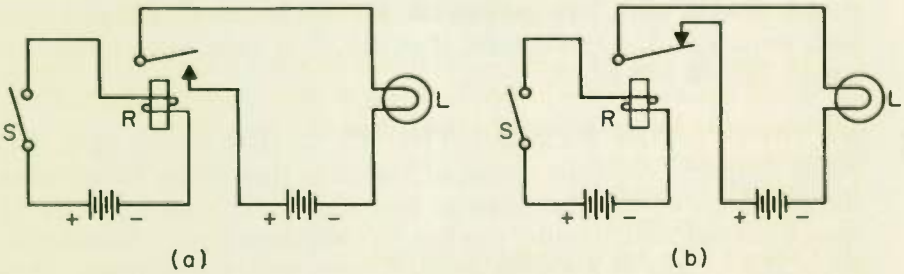

Fig. 26 With a relay, closing a switch may turn a light on as in (a) or off as in (b).

Figure 26(b) shows that to make a NOT logic circuit you would use a relay with NC contacts. Figure 26(a) shows that to make an ordinary logic circuit, you would use NO contacts.

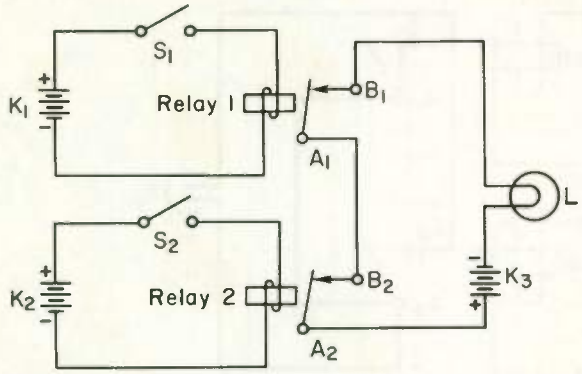

Fig. 27 **Closing either switch turns the light off.**

17 AND CIRCUIT WITH NOT . . . The two relays of Fig. 27 use NC-type contacts. When relay 1 is NOT energized AND relay 2 is NOT energized, the light will be on. We tell what happens in Boolean algebra as follows:

$$\overline{R}_1 \times \overline{R}_2 = L$$

which means "When relay 1 is NOT energized AND relay 2 is NOT energized, light *L* is on."

Since you can energize relay 1 by closing switch S_1 and you can energize relay 2 by closing switch S_2, you can also write

$$\overline{S}_1 \times \overline{S}_2 = L$$

which means "When switch 1 is NOT closed AND switch 2 is NOT closed, light *L* is on." To get light *L*, Fig. 27, to burn, you must open both switch S_1 AND switch S_2. If switch S_1 is open and switch S_2 is closed, light *L* will be off.

18 A CIRCUIT FOR TAMING THE TV . . . Henry, who likes electronic gadgetry, built the circuit of Fig. 28 to turn off his TV set when the telephone is in use or when he goes to bed. He rigged up a SPST spring-contact switch under the bed and adjusted it so it would close when the weight of a person pressed down on the bedspring. Thus relay 1 is energized when he goes to bed. He also made a SPST spring

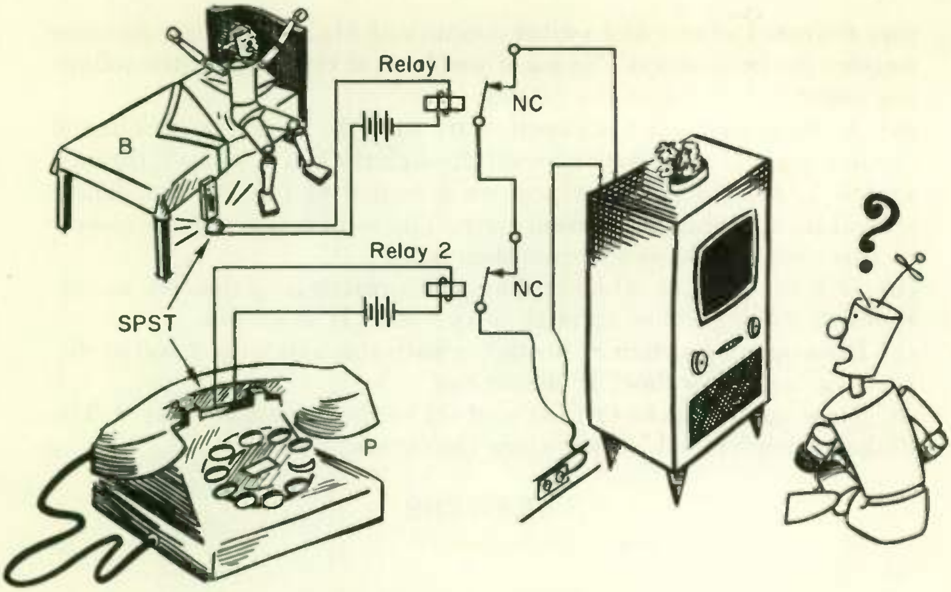

Fig. 28 An AND NOT circuit.

switch and attached it to the telephone in such a way that it would close whenever the phone was lifted off its cradle. Thus relay 2 is energized whenever the phone is in use.

Henry wanted the TV to be on when the bed is not in use (relay 1 NOT energized) AND the telephone is not in use (relay 2 NOT energized). In Boolean algebra,

$$\overline{R}_1 \times \overline{R}_2 = \text{TV}$$

which means "When relay R_1 is NOT energized AND relay R_2 is not energized, the TV set is on." This is exactly the same logic circuit discussed in the preceding topic, so Henry uses two NC relays connected up as in Fig. 27. One reason Henry used relays is that the switches can be operated with low-voltage batteries, which cannot cause an electric shock.

WHAT HAVE YOU LEARNED?

1. Two batteries are shown in Fig. 27 and Fig. 28. Henry actually only used one battery, which furnished electricity to both relays. Can

you redraw the coil and switch circuits of Fig. 28 and use just one battery for both relays? To see if you have it right, make the following tests:

(a) Assuming switch 1 is closed, start with the negative terminal of the battery and trace with a pencil through the coil of relay 1, through switch 1, and back to the positive terminal of the battery. There should be an unbroken current path. The solid arrows in our answer to this problem shows the unbroken path.

(b) Will the path of (a) be broken when switch S_1 is opened, so current can no longer flow through relay 1 coil? It should be.

(c) Does opening switch S_2 break the path through relay 1 coil so current will no longer flow? It should *not*.

(d) Now apply checks (a), (b), and (c) to the circuit of relay 2. The dashed arrows in our answer show the current path.

ANSWERS

(a)

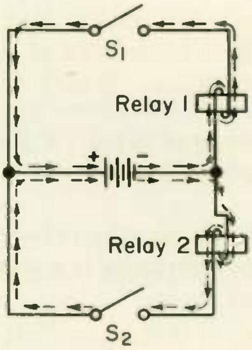

Fig. 29

19 OR CIRCUIT WITH NOT . . .

If contacts A_1 and B_1 are together in Fig. 30 OR if contacts A_2 and B_2 are together, light L will burn. It is not necessary that both of the two sets of contacts be closed. Contacts A_1-B_1 are closed if relay 1 is NOT energized, and contacts A_2-B_2 are closed if relay 2 is NOT energized. We can say all this by simply writing

$$\bar{R}_1 + \bar{R}_2 = L$$

which means "If relay R_1 is NOT energized OR if relay R_2 is NOT energized, light L is on." Or we can write:

$$\bar{S}_1 + \bar{S}_2 = L$$

which means "If switch S_1 is NOT closed OR switch S_2 is NOT closed, light L is on." To get light L to go off, you must close both switches.

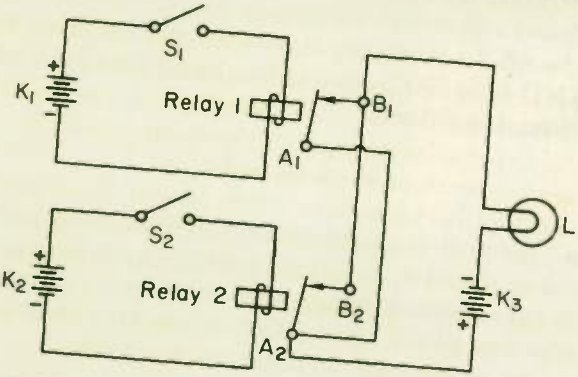

Fig. 30 **An OR NOT circuit.**

WHAT HAVE YOU LEARNED?

1. In Fig. 30 light L is out when both S_1 and S_2 are closed, as it should be, but it is also out when S_1 is closed and S_2 is open. The light is on for all other switch combinations. Which one of the following could be the trouble?

(a) Wire is broken in the coil of relay 1.
(b) Wire is broken in the coil of relay 2.
(c) Switch S_1 is faulty.
(d) Switch S_2 contacts are burned.
(e) Contact B_2 is burned, so it does not make electrical connection with A_2.
(f) Contact B_1 is burned, so it does not make electrical connection with A_1.
(g) Battery K_2 is dead.

ANSWERS

1. (e) . . . The fault is that the light is off more than it should be. This indicates that one or the other set of relay contacts is not closed as often as it should be. Since faulty switches and broken wires result in the contacts in this circuit being closed more than a normal amount, (a), (b), (c), (d), or (g) could not be the cause of the trouble. On the other hand, burned contacts could cause the trouble because they prevent contacts from electrically closing. Contacts A_1-B_1 must be O.K., because the light is on when S_1 is open and S_2 is closed. Tracing around the circuit, you will find that A_1-B_1 must be closed and making proper electrical connection for the light to be on when S_2 is closed. If contacts B_2-A_2 are faulty, no set of contacts will be closed when S_1 is closed and S_2 open. Hence, the light will be off.

20 OTHER LOGIC CIRCUITS . . . Suppose you wanted to build a circuit with two relays and two switches such that a light is on when switch S_1 is closed and switch S_2 is open. For all other switch settings, the light will be off. In other words, you want the light to be on when S_1 is closed AND S_2 is NOT closed. The first thing is to write this in Boolean shorthand as follows:

$$S_1 \times \overline{S}_2 = L$$

which means "When S_1 is closed AND S_2 is NOT closed, light L is on." You'll remember that NC-type contacts are used to represent NOT logic and NO type contacts are used to represent ordinary logic. You therefore order one SPST (NO) relay to use with switch S_1 and one SPST (NC) relay to use with S_2. Since an AND circuit is needed, you connect the contacts together in series, as shown in Fig. 31.

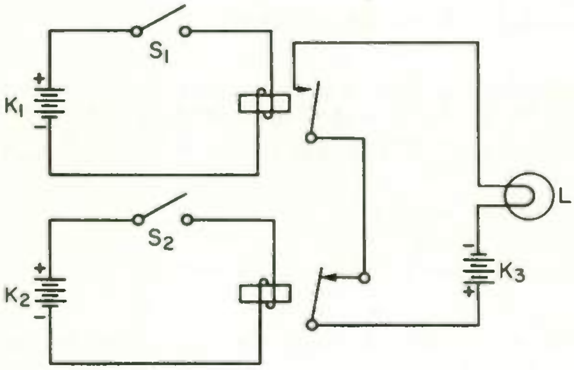

Fig. 31 One switch must be opened and the other closed for the light to come on.

WHAT HAVE YOU LEARNED?

1. Referring to Fig. 31, if both S_1 and S_2 are closed, the light will be (a) ________ . If both S_1 and S_2 are open, the light will be (b) ________ . If S_1 is open and S_2 is closed, the light will be (c) ________ . In order for the light to be on, switch (d) ________ must be open and switch (e) ________ closed.

2. Write the Boolean shorthand to describe a circuit in which a motor-driven pump P comes on whenever the water level gets sufficiently high that a float opens switch S_1 or whenever the attendant closes switch S_2.

3. Draw the circuit of Problem 2, using relays.

ANSWERS

1. (a) Off; (b) off; (c) off; (d) S_2; (e) S_1
2. $\overline{S_1} + S_2 = P$ . . . When S_1 is NOT closed OR S_2 is closed, the pump is on.
3.

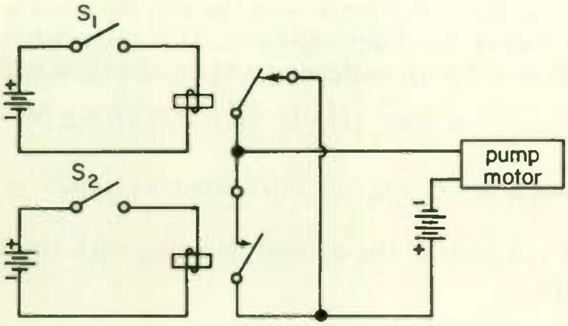

Fig. 32

21 DECISION MAKING UNLIMITED . . . In this lesson we can study only a few of the simplest decision-making circuits. The number of such circuits that can be formed with a few relays is very great, so that a robot can be designed to "think" in any manner desired. For example, using only 3 relays, over 250 different decision-making circuits can be constructed, and with 5 relays over 4 billion circuits are possible.

One more example of a logic circuit with two relays is shown in Fig.

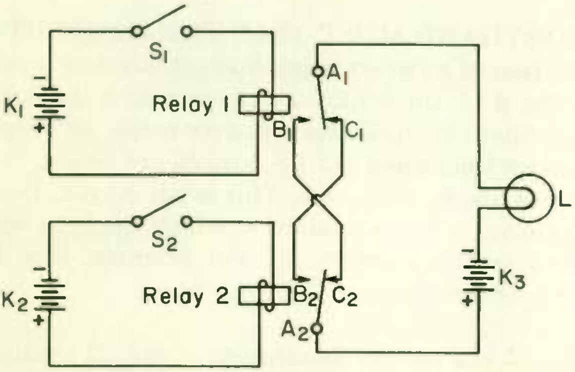

Fig. 33 A logic circuit that uses double-throw relays.

33. It uses SPDT relays. How it behaves can be expressed in Boolean algebra as

$$(\bar{S}_1 \times S_2) + (S_1 \times \bar{S}_2) = L$$

which means "if S_1 is NOT closed AND S_2 is closed, the light will be on. OR if S_1 is closed AND S_2 is NOT closed, the light will also be on." In plainer English, if either one of the two switches is closed and the other one is open, the light will be on. If both switches are closed, the light is off, and if both switches are open, the light will also be off.

WHAT HAVE YOU LEARNED?

1. (a) Does lamp L, Fig. 33, burn when switch S_1 is open and S_2 is closed?
(b) Trace the path of the current, starting with the negative side of the battery.

2. Suppose that contact B_1 is so badly burned that, when relay 1 is energized, A_1 and B_1 do not make electrical contact with each other.
(a) If both switches are closed, will lamp L light?
(b) If both switches are open, will lamp L light?
(c) If S_1 is open and S_2 closed, will lamp L light?
(d) If S_1 is closed and S_2 open, will lamp L light?

ANSWERS

1. (a) Yes (b) Current goes from negative terminal through L, to A_1, to C_1, to B_2, to A_2, and from there back to the positive side of battery.
2. (a) No; (b) no; (c) yes; (d) no

22

YOUR BOOLEAN SHORTHAND MUST TELL THE COMPLETE STORY . . . Your description of a circuit using Boolean algebra won't be right unless it describes *ALL* the conditions under which the light (or whatever is being operated) is on. To see what we mean, let's look at Fig. 24. We might notice that when both S_1 and S_2 are closed, the light is on, and therefore write $S_1 \times S_2 = L$. This is not correct Boolean algebra because there are other conditions in which the light will be on besides when both switches are closed. For example, if S_1 is closed and S_2 is open, the light is also on.

The expression $S_1 \times S_2 = L$ is a correct description of Fig. 22 because the only condition under which the light will be on is when both switches are closed. $S_1 + S_2 = L$ is a correct description of Fig. 24 because it covers all three conditions under which the light will be on. These three conditions are: (1) when S_1 and S_2 are both closed; (2) when S_1 is closed and S_2 is open; and (3) when S_1 is open and S_2 is closed. The expression $S_1 + S_2 = L$ covers all three of these conditions because it says the light will be on if either S_1 or S_2 is closed.

In answering Questions 1 through 6 of the Examination which follows, check carefully to see if the answer you chose describes *all the conditions* under which the light will be on.

LESSON 2313-3

TRACING THROUGH DECISION-MAKING CIRCUITS

EXAMINATION

Circle the number of the correct answer for each question that follows. When you are finished, transfer the answers to the answer sheet by putting X's in the proper squares. When the graded answer sheet is returned to you, correct in this book any questions you may have missed. By doing so, you will have a record of the correct answers to all questions for review purposes.

1. Which of the following describes the operation of the circuit of Fig. 34?

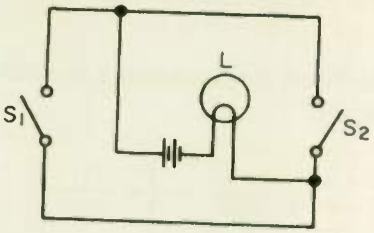

Fig. 34

(1) $S_1 \times S_2 = L$
(2) $\overline{S}_1 \times S_2 = L$
(3) $S_1 \times \overline{S}_2 = L$
(4) $\overline{S}_1 + \overline{S}_2 = L$
[✓ (5)] $S_1 + S_2 = L$
(6) $\overline{S}_1 + S_2 = L$
(7) $S_1 + \overline{S}_2 = L$

2. Which of the selections for Question 1 describes the operation of the circuit of Fig. 35?

①

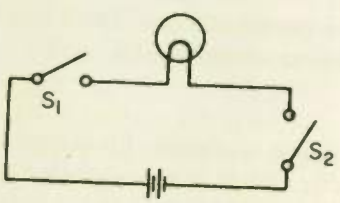

Fig. 35

3. Which of the selections for Question 1 describes the operation of the circuit of Fig. 36?

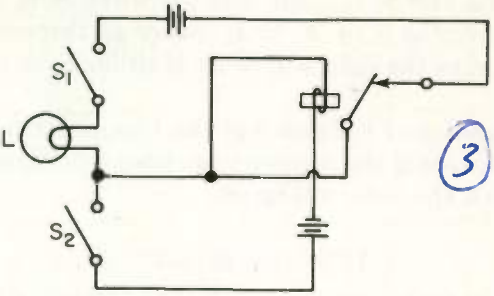

Fig. 36

4. Which of the selections for Question 1 describes operation of the circuit of Fig. 37?

1

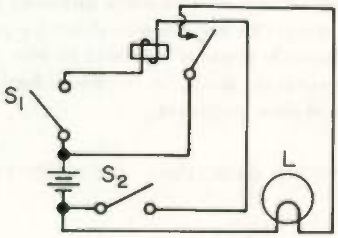

Fig. 37

5. Which of the selections for Question 1 describes the operation of the circuit of Fig. 38?

4

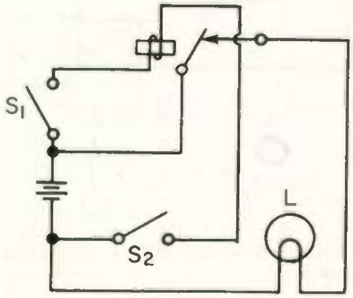

Fig. 38

6. In which of the diagrams of Fig. 39 will the lamp light in accordance with the Boolean statement $(S_1 + S_2) \times S_3 = L$?
[✓ (1) (a)] (2) (b) (3) (c) (4) (d)

7. Figure 40 shows three oil tanks. Floats on top of the oil operate the switches S_1, S_2, and S_3, each switch being adjusted to close when the oil level in its tank goes below 2 ft. The emergency bell should ring when the oil level in *all* tanks is below 2 ft., but not

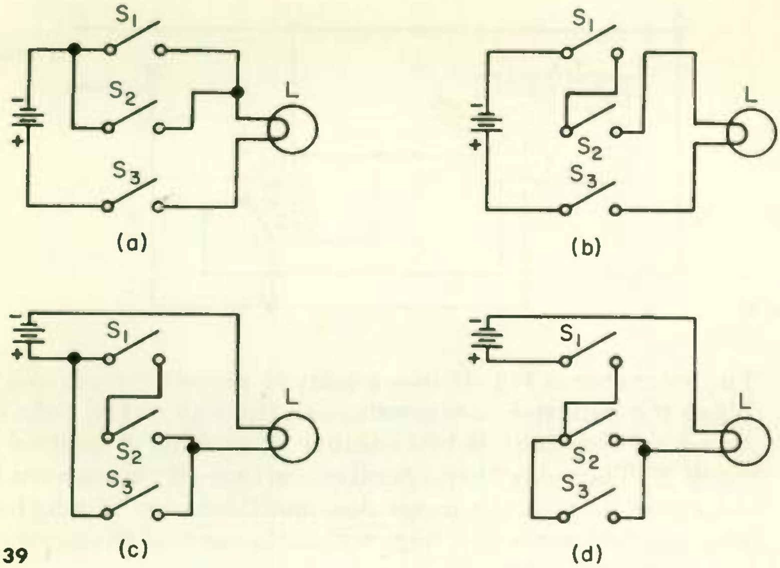

Fig. 39

at any other time. In which diagram is the circuit connected up correctly?

(1) (a) [✓ (2)] (b) (3) (c) (4) (d)

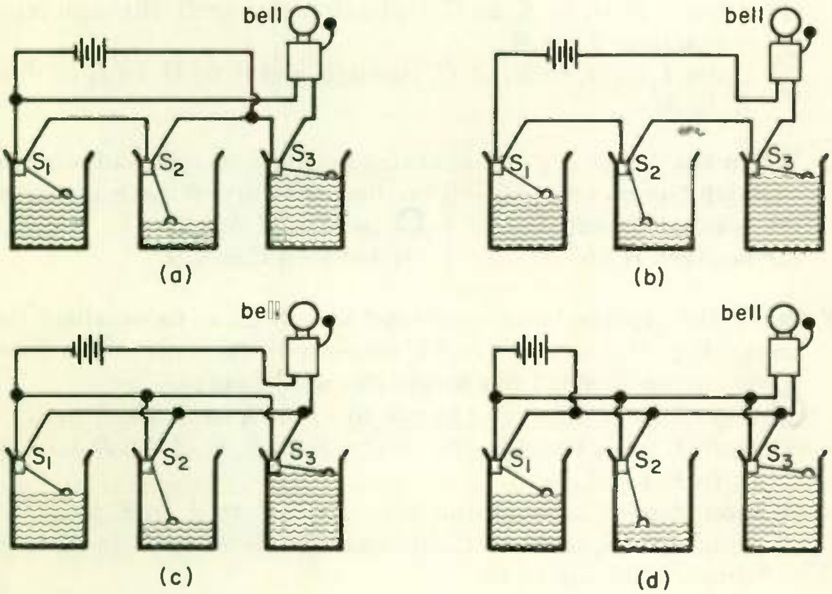

Fig. 40

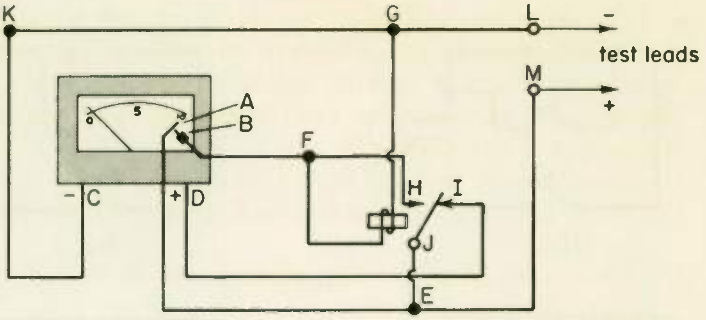

Fig. 41

8. The voltmeter in Fig. 41 uses a relay to protect it from overload. When the indicator needle swings all the way to the right (indicating an overload), it hits contact *A*, pushing *A* over so as to touch *B*. The relay then operates, cutting off the current from the meter, so that the meter does not burn out. When the test leads are held across a voltage within the range of the meter, what is the current path?
   (1) From *L* to *G*, through relay to *F*, through meter movement to *A*, to *E*, to *M*
   (2) From *L* to *G*, to *K*, to *C*, through the meter to *E*, to *M*
   (3) From *L* to *G*, through relay to *F*, through relay contacts to *J*, to *M*
   (4) From *L* to *G*, to *K*, to *C*, through meter to *B*, through relay contacts to *J*, to *M*
   [✓ (5)] From *L* to *G*, to *K*, to *C*, through meter to *D*, to *I*, to *J*, to *E*, to *M*

9. When the relay, Fig. 41, operates because of overload, current through the meter is cut off because the current path is opened
   (1) between *A* and *B*.
   (2) between *H* and *J*.
   [✓ (3)] between *I* and *J*.
   (4) between *C* and *D*.

10. When the voltage being measured is so high as to overload the meter, Fig. 41, the relay coil is energized, the path of the energizing current needed to operate the relay being
   [✓ (1)] from *L* to *G*, through the coil to *F*, to *B*, to *A*, to *E*, to *M*.
   (2) from *L* to *G*, through the coil to *F*, to *B*, to *A*, to *D*, to *I*, to *J*, to *E*, to *M*.
   (3) from *L* to *G*, through the coil to *F*, to *I*, to *J*, to *E*, to *M*.
   (4) from *L* to *G*, to *K*, to *C*, through the meter to *A*, to *B*, to *F*, through the coil to *G*.

11. After the relay coil, Fig. 41, has been energized from an overload

and the relay has operated, the meter current is cut off, so that the indicator needle drops back to zero. The circuit is now broken between contacts *A* and *B*, but the relay coil stays energized. What is the current path that keeps the relay energized after contacts *A*-*B* have opened?

(1) From *L* to *G*, to *K*, to *D*, to *I*, to *J*, to *E*, to *M*
(2) From *L* to *G*, through coil to *F*, to *B*, to *D*, to *I*, to *J*, to *E*, to *M*
(3) From *L* to *K*, to *C*, through meter to *B*, to *F*, to *H*, to *J*, to *E*, to *M*
[✓ (4)] From *L* to *G*, through coil to *F*, to *H*, to *J*, to *E*, to *M*

12. After the relay, Fig. 41, has operated because of an overload, what must be done before the relay will release?

(1) Change the meter scale selector to a higher voltage scale, so that the meter is no longer overloaded.
(2) Relay will release as soon as contact between *A* and *B* is broken.
(3) Relay will release as soon as the voltage being measured drops to within the voltage range of the meter.
[✓ (4)] The tests leads must be removed from the voltage being measured before the relay will release.

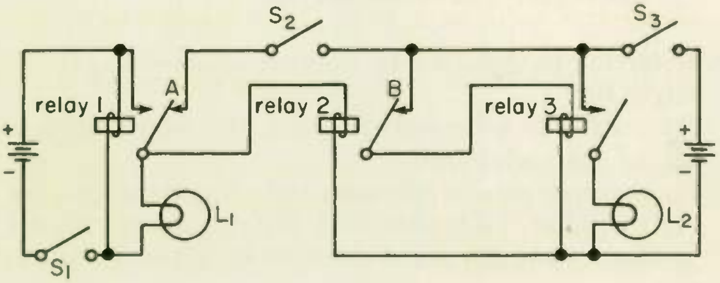

Fig. 42

13. In Fig. 42, which lights are on when switches S_1 and S_2 are both open and S_3 is closed? Relay contacts are shown in deenergized positions.

(1) None (2) L_1 only [✓ (3)] L_2 only (4) Both L_1 and L_2

14. In Fig. 42, which lights are on when switch S_1 and S_3 are closed, and S_2 is open? (Select answer from choices for Question 13.)

[illegible]

15. Which lights are on when switch S_1, Fig. 42, is open and switches S_2 and S_3 are closed? (Select answer from choices for Question 13.)

(1)

16. Which lights are on if all switches in Fig. 42 are closed? (Select answer from choices for Question 13.) ④

17. In Fig. 42, which relay can be described as SPST (NO)?

(1) Relay R_1	[✓ (3)] Relay R_3
(2) Relay R_2	(4) Both relay 2 relay 3

Fig. 43

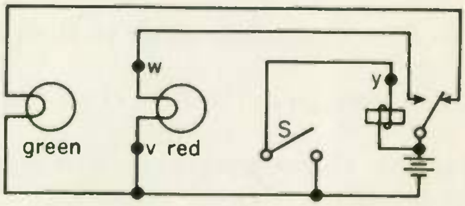

18. In Fig. 43 the green light is on and the red light off both when switch S is open and when S is closed. What might be wrong with the circuit, if anything?
   (1) This is normal operation for the way the circuit is connected.
   (2) The battery may be discharged.
   (3) The red bulb may be burned out.
   [✓ (4)] Relay armature may be stuck to the right contact because the contacts have overheated.

19. Referring to Question 18, another cause of the trouble (if any) might be
   (1) none—this is normal operation, and no trouble is indicated.
   [✓ (2)] an open relay coil.
   (3) the leads coming into relay coil are shorted together.
   (4) when the coil is energized, dirty contacts prevent armature from making a closed electrical circuit with left relay contact.

20. Circuits made up of AND and OR circuits are called

(1) hybrid circuits.	[✓ (3)] logic circuits.
(2) NOR circuits.	(4) relay circuits.

CLEVELAND INSTITUTE OF ELECTRONICS

CLEVELAND INSTITUTE OF ELECTRONICS / CLEVELAND, OHIO

electronics

CLEVELAND INSTITUTE OF ELECTRONICS / CLEVELAND, OHIO

Oscillators

2407-3

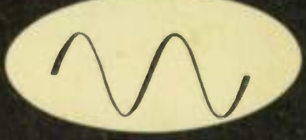

An AUTO-PROGRAMMED® Lesson

ABOUT THE AUTHOR

This text on Oscillators was written by John M. Doyle. In writing this lesson, Mr. Doyle's constant aim was to ensure that the material presented was accurate, useful, and interesting.

Mr. Doyle has been engaged in writing electronics material for home-study schools for several years. He is a senior member of the Society of Technical Writers and Publishers as well as a member of the IEEE.

He is the author of *Pulse Fundamentals,* a technical institute level textbook. Mr. Doyle is a consultant on technical writing for organizations.

This is an AUTO-PROGRAMMED* Lesson exclusive with the Cleveland Institute of Electronics. It is your assurance of the finest in technical education and training.

Registered Trademark

Accredited by the Accrediting Commission of the National Home Study Council

The Accrediting Commission has been approved by the U.S. Office of Education as a "nationally recognized accrediting agency".

CLEVELAND INSTITUTE OF ELECTRONICS

Oscillators

By JOHN M. DOYLE
Technical Staff
Cleveland Institute of Electronics

2407-3

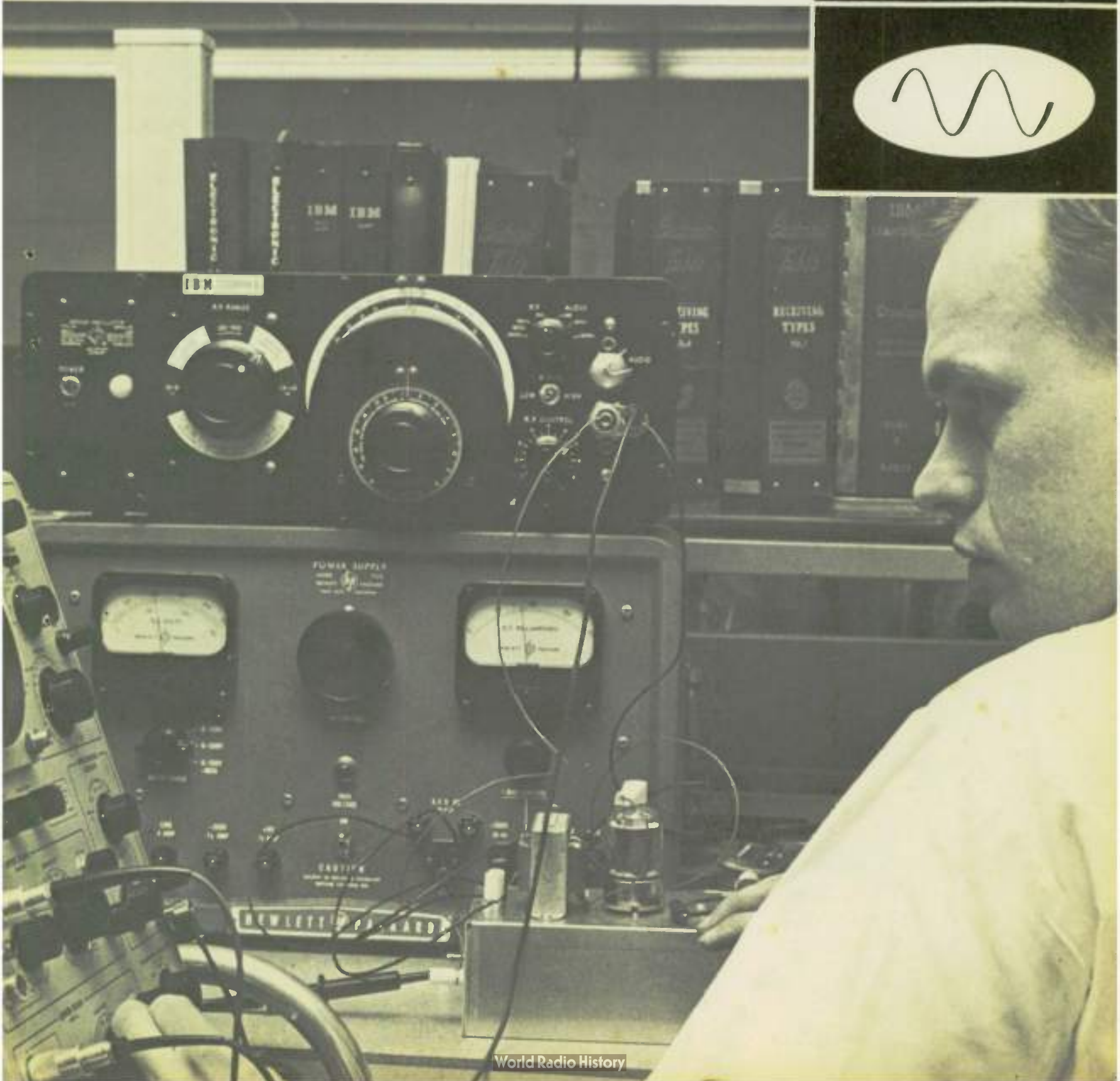

In this lesson you will learn...

Electronics technician using an amplifier, oscillator, and power supply for checking the performance of an oscillator.

Photo: Courtesy, International Business Machines Corporation.

Library of Congress Catalog Card Number 63-12736

SECOND EDITION/Fourth Revised Printing/November, 1967.

2407-3

A chat with your instructor

Oscillators are generators of alternating waveforms. Depending on their circuitry, they generate signals at low, intermediate, or high frequencies. Oscillators are used in the tuning stages of radio and television receivers, and they are used in transmitters to generate the fundamental signal which will eventually be sent through space to various receivers. Oscillators are employed in tape recorders to erase recorded tape, in electronic organs to produce musical tones, and in radar, computers, and data-processing systems. They have many other electronic applications as well.

Frequency-determining elements, that is, those parts that determine the number of cycles per second at which the oscillator operates, are important parts of any oscillator. In fact, the physical nature of these elements provides one method of classifying oscillators.

When the generated signal is a sine wave of either audio or radio frequency, the frequency-determining elements are commonly in the form of a parallel *LC* (inductance-capacitance) resonant circuit, and the oscillator is called an *LC* oscillator. At audio frequencies, an iron core may be used in the inductor, and at radio frequencies, air-core inductors are generally used.

To improve frequency stability, the *LC* frequency-determining circuit is often replaced by a crystal, and the oscillator is then called a crystal oscillator. As will be shown, however, the crystal also possesses the properties of inductance and capacitance and is the equivalent of the *LC* circuit. Operation, therefore, is essentially the same as for the *LC* circuit.

When the generated signal is a pulse type of waveform, such as the square wave, the frequency-determining elements most often take the form of an *RC* (resistance-capacitance) network, and the oscillator is called and *RC* oscillator.

At microwave frequencies (such as those used in radar), the oscillators use special devices having so-called resonant cavities. Two types of microwave oscillators are considered in this lesson: the klystron and the magnetron. Thus, we have four basic types of oscillators: the *LC*, crystal, *RC*, and microwave. They are considered according to type in this lesson.

Oscillators with provision for varying the frequency of the output signal by manual adjustment are called variable-frequency oscillators, abbreviated VFO. Other oscillators generate a signal of fixed frequency which cannot be changed without circuit modification, and they are called fixed-frequency oscillators, seldom, if ever, abbreviated.

Finally, it should be noted that, with the exception of microwave oscillators, the oscillator output signal is low and amplifiers are needed to increase the signal level to that desired for practical application. One exception is the microwave oscillator, which frequently produces high-power output signals that are fed directly to an antenna system.

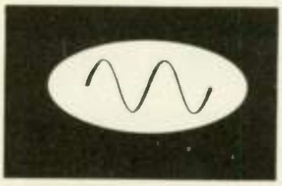

Oscillators

BASIC OSCILLATOR PRINCIPLES

Although there are a great many different types of oscillators, most of them come under the general grouping of *feedback* oscillators and operate on the same basic principles. If you understand those principles, you will find it easy to understand the operation of any type of feedback oscillator.

1 THE FLYWHEEL EFFECT . . . When a capacitor and an inductor are arranged as shown in Fig. 1(a), the combination becomes the simplest form of electrical oscillator.

If the capacitor is charged as shown in Fig. 1(a), energy is stored in its electric field. Upon removal of the charging source, the capacitor

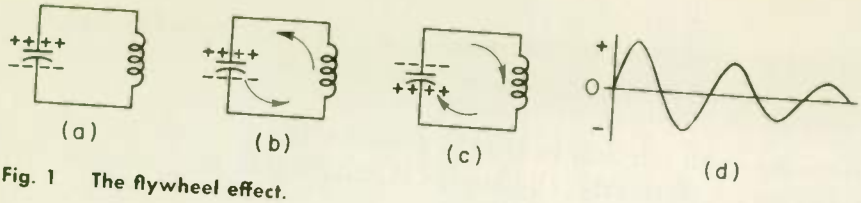

Fig. 1 The flywheel effect.

immediately starts to discharge through the inductance, and electrons flow in the direction indicated by the arrows in Fig. 1(b). During discharge, current passes through the inductance and energy is stored in its electromagnetic field. The potential across the capacitor gradually drops to 0 volts, at which point the capacitor has completely discharged its energy across the coil.

Then the magnetic field of the coil collapses, and the coil generates a back emf in such direction as to recharge the capacitor in the opposite direction. Electron flow through the coil is then in the same direction as the original charging current.

As soon as the capacitor has recharged, and energy is once again stored in its electric field, current flow through the circuit is as shown in Fig. 1(c). The capacitor again discharges its energy across the inductance, which in turn recharges the capacitor to the polarity shown in Fig. 1(a). Then the cycle is started over again, as shown in Fig. 1(b).

Thus, the reversal in the direction of current flow in the circuit creates an alternating current and consequently an alternating voltage across the capacitor and across the inductor. Because a capacitance and an inductance are used, the current and voltages are of sine-wave form. The ability of an *LC* resonant circuit to circulate energy to and fro— that is, to cause *oscillations* – is called the *flywheel effect*.

2 DAMPING . . . In any practical *LC* circuit, some amount of resistance is present in the inductor and a lesser amount is present in the capacitor. One effect of these unwanted resistances is to use up some of the stored energy in the form of heat, or I^2R losses, during each cycle. If there were no resistance in the circuit to use up energy, the interchange of energy between coil and capacitor would continue indefinitely.

In a sense, the action of an *LC* circuit is similar to the action of a pendulum. The pendulum also makes use of stored energy. Once energy has been imparted to it to start it swinging, the pendulum continues to swing. It would continue swinging indefinitely if energy were not consumed by air resistance and friction in the bearing or pivot from which the pendulum is suspended.

Because such friction is always present, the pendulum eventually slows down. Similarly, the energy circulating in the resonant circuit of Fig. 1 eventually dies down.

To keep the pendulum swinging for practical periods of time as in a clock, energy is supplied to the pendulum during each swing to make up for losses due to air resistance and friction. Similarly, in an *LC* circuit, energy is supplied during each cycle to make up for losses due to electrical resistance in the circuit.

If these losses were not made up during each cycle, the parallel resonant circuit would produce a waveform of gradually declining amplitude, as shown in Fig. 1(d). A waveform of this type is known as a *damped wave*.

3 FREQUENCY . . . The frequency of oscillation of the simple oscillator shown in Fig. 1 depends on the values of the inductance and the capacitance. If a larger value of capacitance is used, it takes longer for the capacitor to charge fully, and also longer to discharge. The frequency of the sine wave is therefore reduced. The frequency may also be lowered by increasing the value of inductance.

Thus, if either the value of the capacitor or the value of the coil is made smaller, or if both values are reduced simultaneously, the charge and discharge time t is reduced, and therefore a signal of higher frequency $\frac{1}{t}$ is generated. The formula for determining the resonant frequency of such a circuit is

$$f_r = \frac{1}{2\pi\sqrt{LC}}$$

where f_r = resonant frequency
2π = a constant whose value is 6.28
L = inductance of the coil, in henrys
C = capacitance of the capacitor, in farads

EXAMPLE . . . If the inductance of a coil is 50 mh and the coil is connected in parallel with a capacitor which has a value of 40 pf (picofarads), the frequency of the parallel combination is ________ kilocycles.

SOLUTION . . . 113 . . . $f_r = \dfrac{1}{2\pi\sqrt{LC}}$

By substituting $L = 0.05$ henrys and $C = 40 \times 10^{-12}$ farads we have

$$f_r = \frac{1}{2\pi\sqrt{0.05 \times 40 \times 10^{-12}}}$$
$$= \frac{1}{6.28\sqrt{2 \times 10^{-12}}} = \frac{1}{6.28 \times 1.414 \times 10^{-6}}$$
$$= 0.113 \times 10^{6} = 113 \text{ kc, } ans.$$

A simple capacitor and inductor combination, as described, will generate the sine-wave form at the desired frequency, but the small amount of energy present in such a circuit cannot be put to practical use.

As soon as the circuit is loaded, it stops oscillating. Thus, it is necessary to furnish power to the circuit so that it can deliver a continuous amount of energy. The most practical way to do so is to furnish the circuit with d-c power and permit it to convert this power to the necessary a-c energy. This can be done by using vacuum-tube or transistor circuits, the subject of following topics.

WHAT HAVE YOU LEARNED?

1. In a simple *LC* parallel resonant circuit, with energy initially applied to the capacitor, the output waveform is a (a) __________ __________ as a result of the (b) __________ effect. Because of circuit losses, (c) __________ of the output waveform occurs. The amplitude of each succeeding cycle of oscillation (d) __________ until the oscillation dies out altogether.

2. If, instead of an inductor, we connect a resistor in parallel with a charged capacitor, the charge of the capacitor will be dissipated across the resistor. Since a practical inductor contains resistance, the losses in an oscillating *LC* tank circuit are due primarily to this (a) __________. As the resistance of the inductor increases, (b) __________ of the output waveform also increases, since the energy in the circuit is more rapidly (c) __________. In view of this, a coil having a low value of (d) __________ is desirable in an oscillator tank circuit. Coils having a low value of resistance compared to their inductive reactance are said to have a high Q, which is a figure of merit. Thus, we may also say that oscillators should employ high (e) __________ coils, to minimize (f) __________.

3. In the construction of a VFO, you are using a variable tuning capacitor and an air-core coil wound on an appropriate frame. You find that you can produce an output at a frequency considerably below the desired lowest frequency, but that you cannot quite reach the desired upper frequency. What would you do to increase the upper frequency range of the VFO?

ANSWERS

1. (a) Sine wave; (b) flywheel; (c) damping; (d) decreases
2. (a) Resistance; (b) damping; (c) dissipated; (d) resistance
   (e) Q; (f) damping
3. Remove part of the coil winding. This reduces L, and therefore increases the resonant frequency of the combination. Reducing either L or C increases the resonant frequency.

4 A BASIC OSCILLATOR CIRCUIT . . . If we take an ordinary amplifier without feedback and apply a signal to its input terminals, an amplified version of the input signal appears across the output terminals, as shown in Fig. 2(a). In an oscillator, we again use an amplifier, but now the amplifier is so arranged that a portion of its output is fed back to its input in the correct *amount* and *phase* to produce sustained oscillation. This is illustrated in Fig. 2(b). Thus, we may define an oscillator, in more definite terms than previously used, as a self-excited amplifier, that is, an amplifier that provides its own input.

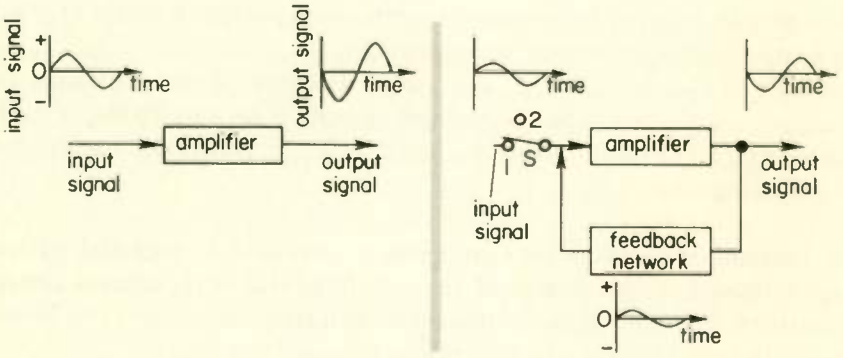

(a) (b)

Fig. 2 An oscillator is a self-excited amplifier. Part (a) shows conventional amplifier; alternating-voltage input signal is increased at output. Part (b) shows how feedback network is used to return a positive or regenerative voltage from the output to increase the input signal. When sufficient positive feedback is returned to input, switch S can be opened to cut off the input signal, which is no longer needed.

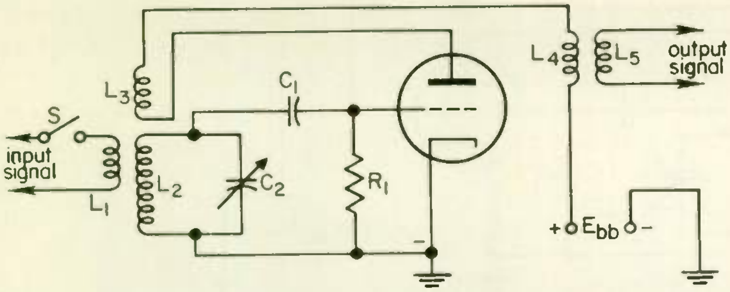

Fig. 3 An amplifier with feedback from plate to grid through L_3 to form an oscillator.

Figure 3 shows an actual workable circuit with all the elements of Fig. 2(b). Except for L_3, the circuit shown is that of an ordinary amplifier with a tuned grid circuit. Bias is obtained by the grid leak method through R_1C_1. When switch *S* is closed, an amplified version of the input signal appears as the output signal. The amplified signal also flows through L_3, which is wound on the same form with L_2 so that L_2 and L_3 are electrically coupled. The signal flowing through L_3 induces the signal voltage into L_2, so that switch *S* can be opened and there will still be an input signal by virtue of the feedback of the signal from L_3 to L_2. Although *S* is left open, there will continue to be an output signal. That is, the amplifier has become an oscillator that converts the d-c power from E_{bb} into alternating current.

5 WHY THE OSCILLATOR IS SELF-STARTING . . . Actually, an input signal from L_1 is not needed to get the oscillator in operation. Random noise signals generated within the tube will be amplified and fed back through L_3 to induce a very weak signal into L_2. This weak signal is amplified to produce a stronger signal in the plate circuit and L_3, so that a stronger signal is now fed back to L_2 and produces, in turn, a still stronger plate signal. This building up in amplitude of the signal continues until the amplitude of the oscillations reaches full strength. Within a fraction of a second from the time power is cut in to it, an oscillator will be oscillating at full strength.

6 A PRACTICAL FORM FOR AN OSCILLATOR . . . In Fig. 3 the output signal is taken by induction from L_4 in the plate circuit. We can eliminate the need for L_4 by coupling L_5 to L_2 in the grid circuit. Remembering that L_1 is not needed, the circuit of a practical oscillator of this type, called an Armstrong oscillator, is then as shown in Fig. 4.

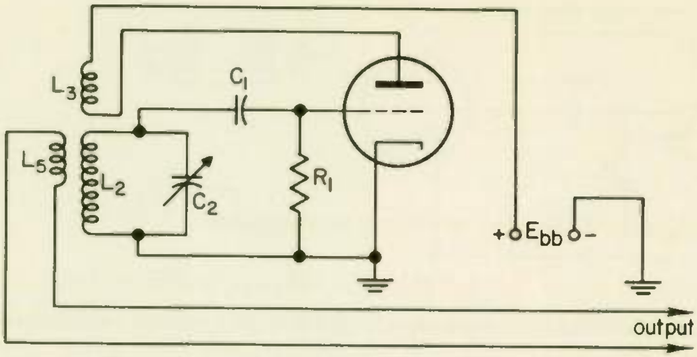

Fig. 4 **A practical form of the Armstrong oscillator.**

The frequency of oscillation in Fig. 4 is determined by the resonant frequency of the tank circuit L_2C_2. In discussing the flywheel effect we saw that a tank circuit like L_2C_2 acts as an oscillator, but that the oscillations soon die out because of energy losses in the coil. If energy is continually fed back by means of L_3 to make up for the losses, L_2C_2 continues to oscillate.

7 FEEDBACK MUST BE OF PROPER PHASE . . . Referring to Fig. 3 for a moment, the signal induced into L_2 from L_3 must be in phase with the signal induced into L_2 from L_1. If the two induced signals are out of phase so that they buck each other, the net induced voltage in L_2 is reduced, and consequently the output signal is reduced. If switch S is now opened the circuit will not oscillate because the signal induced into L_2 from L_3 is of such polarity as to buck the oscillations in L_2C_2, rather than build them up. Thus when the feedback is of improper phase, oscillations in L_2C_2 die out quicker than if L_3 were completely missing.

When the energy fed back from output to input of an amplifier is of proper phase to support oscillation, the feedback is referred to as *positive* or *regenerative*. When the phase of the feedback is such as to prevent oscillations and to weaken the gain of the amplifier, the feedback is referred to as *negative* or *degenerative*.

Changing the phase of the feedback in the circuit of Fig. 3 or 4 is very simple. It is merely a matter of reversing the connections to L_3. If you build an Armstrong oscillator and it won't oscillate, the first thing to try is reversing the leads to L_3.

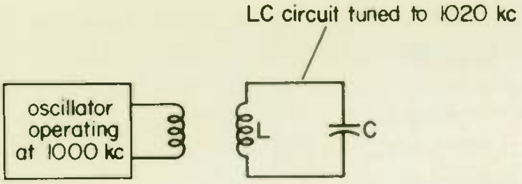

Fig. 5 LC circuit will oscillate when oscillator is brought close.

We have seen how, when the E_{bb} power is first applied to the circuit of Fig. 4, there are very weak oscillations which quickly build up in amplitude with successive cycles. What makes the amplitude of the oscillations stop increasing after full strength is reached? The answer is that the oscillations continue to increase in amplitude until they are of such magnitude that plate saturation of the tube occurs. This decreases the gain of the tube to the point at which the energy fed back to the grid tank circuit is exactly balanced by the energy lost in the resistance of the tank circuit plus the energy taken away by the output signal. Equilibrium is then reached and the oscillations become and remain constant in amplitude.

The frequency of an oscillator is primarily determined by the resonant frequency of its tuned tank circuit, but the oscillator frequency will vary somewhat from the tank resonant frequency if necessary to keep the proper phase relationship with the source of energy being fed to the tank circuit to sustain oscillations. Thus when the oscillator of Fig. 5 is brought near the *LC* circuit so that energy from the oscillator is coupled into *L*, the *LC* circuit will oscillate at 1000 kc, the frequency of the oscillator, even though the *LC* circuit is tuned to 1020 kc.

If two oscillators operating on nearly the same frequencies are brought close together so that there is coupling between them, there will be an interchange of energy between their tank circuits. Each oscillator will tend to shift in frequency sufficiently to be in proper phase with the energy being received from the other oscillator. Thus the two oscillators will lock together in synchronism and both will operate at exactly the same frequency. It is common practice in electronics to synchronize the frequency of an oscillator to that of some external frequency source.

WHAT HAVE YOU LEARNED?

1. An oscillator may be defined as a (a) ____________________ amplifier, since part of its (b) ____________ is used to provide its own (c) ____________.

To produce sustained oscillations, however, the feedback must be of the same (d) __________ as the tank circuit input; that is, the feedback must be (e) __________. If the energy fed back to the input is not of the same phase as the energy in the tank circuit, the feedback energy (f) __________ the energy in the tank circuit and sustained (g) __________ cannot occur.

2. When feedback is of the correct polarity, the oscillations build up in amplitude. The maximum amplitude reached is limited by the __________ of the tube.

3. Suppose you construct an oscillator using a feedback coil and it fails to oscillate when power is applied. A good first check would be to (a) __________ the leads to the feedback coil. Now, suppose that even after you do this, the oscillator still will not oscillate even though all components and operating potentials used in the circuit are satisfactory. You would first return the reversed coil leads to their original position and then increase the (b) __________ between the coils, since the degree of coupling determines the amount of (c) __________ and the feedback must be sufficient to overcome circuit (d) __________ before sustained oscillations can occur.

ANSWERS

1. (a) Self-excited; (b) output; (c) input; (d) phase
   (e) positive or regenerative; (f) opposes; (g) oscillations
2. Saturation
3. (a) Reverse; (b) coupling; (c) feedback; (d) losses

8 CLASS OF OPERATION . . . Most oscillators, including the Armstrong circuit of Fig. 4, use grid leak bias. The amount of bias is determined by the amplitude of the grid signal, that is, by the amplitude of the oscillations in L_2C_2 of Fig. 4. As the oscillations build up in amplitude after power is applied, the bias increases until it is so great before tube saturation is reached that the oscillator operates as a class C amplifier.

This assures good efficiency. Also, plate current is cut off most of the cycle, so that the feedback current through L_3 occurs in pulses, one short pulse each cycle. But because of flywheel effect, tank circuit L_2C_2 generates a true sine wave and therefore delivers a sine-wave output. The pulse through L_3, occurring once each cycle, induces enough energy into L_2 to replace that lost the preceding cycle, so that oscillations continue indefinitely.

The amplifier may be considered as a switch that opens and closes as necessary to provide the needed energy to the tank circuit to prevent damping of the output waveform. The "closing of the switch" is timed to occur at the peak of the oscillation in the tank circuit to reinforce the oscillation. If the switch timing is incorrect, sustained oscillations cannot occur. Since the phase of feedback controls the switch timing, the importance of the phase relation is readily apparent.

Oscillators using tuned tank circuits operating class C *must* use grid leak bias in order to be self-starting. Remember that when a tube is biased for class C operation, it is biased beyond cutoff, and consequently no plate current flows when there is no input signal. There is no input signal to the grid of an oscillator until oscillations start. Therefore, the use of fixed voltage, such as a battery, for biasing the grid would keep oscillations from starting when power was supplied, since there would be no plate current. With grid leak bias the bias is zero without a signal on the grid, so that there is a heavy plate current when the power is cut in. This causes oscillations to build up quickly.

WHAT HAVE YOU LEARNED?

1. The use of grid leak bias in an oscillator offers two major advantages: automatic adjustment to the proper bias for class (a) ________ operation and (b) ________ starting.

2. The use of class C bias in an oscillator is identical to the use of class C in an r-f amplifier. Thus, the grid of the amplifier is held below (a) ________ for the (b) ________ portion of the operating cycle and conduction occurs only when the grid voltage rises above (c) ________.

3. What effect will a shorted capacitor in the R_1C_1 grid leak network of Fig. 4 have on amplifier operation? ________

ANSWERS

1. (a) C; (b) self 2. (a) Cutoff; (b) greater; (c) cutoff
3. The tube may be destroyed by heavy plate current ... A short in C_1 places the grid at cathode d-c potential, thus removing all bias.

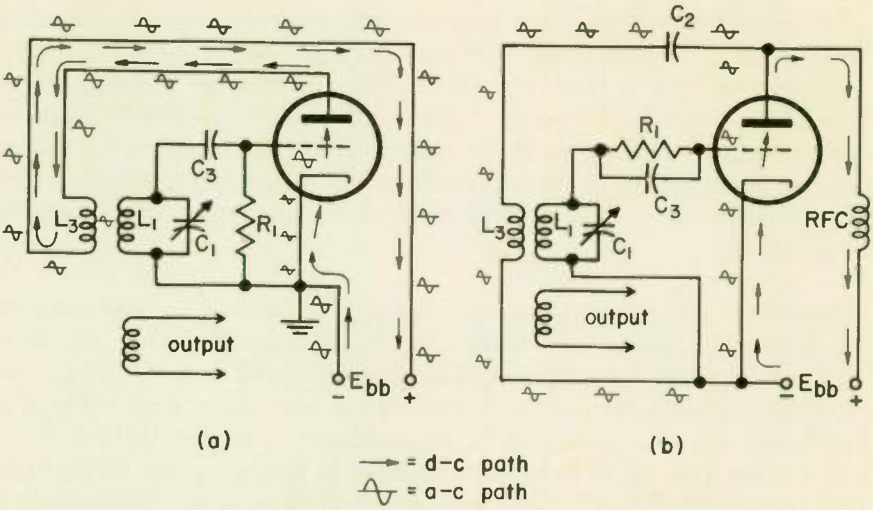

Fig. 6 Two arrangements of the tuned grid Armstrong oscillator with series feed in (a) and shunt feed in (b).

LC OSCILLATORS

This section of the lesson is devoted to oscillators that use tuned tank circuits as their frequency-determining element. Noncrystal-controlled r-f oscillators, except those operating at very high frequencies, are usually of this type, and so are some audio oscillators.

9 THE ARMSTRONG OSCILLATOR . . . An *LC* oscillator that uses only one tuned tank circuit and makes use of a separate coil winding to obtain feedback from plate circuit to grid circuit is called an *Armstrong oscillator*. The tuned tank can be in either the grid circuit, as in all the circuits of Fig. 6, or in the plate circuit, as in the circuits of Fig. 7. In all the diagrams of Figs. 6 and 7 the separate feedback winding that identifies the circuit as an Armstrong oscillator is marked L_3. This feedback winding is called the *tickler coil*.

The Armstrong oscillator of Fig. 6(a) is identical to the one you have previously studied with reference to Fig. 4. This circuit is *series fed,* because both the d-c and a-c plate currents follow the same path, as the figure shows. Figure 6(b) differs in that it is *shunt fed,* because the d-c and a-c plate currents follow different paths. Capacitor C_2 keeps the plate d-c current out of L_3, and RFC blocks the a-c signal so it can't go through the power supply and is instead forced through L_3. Since the same a-c signal is in L_3 in both circuits and since the

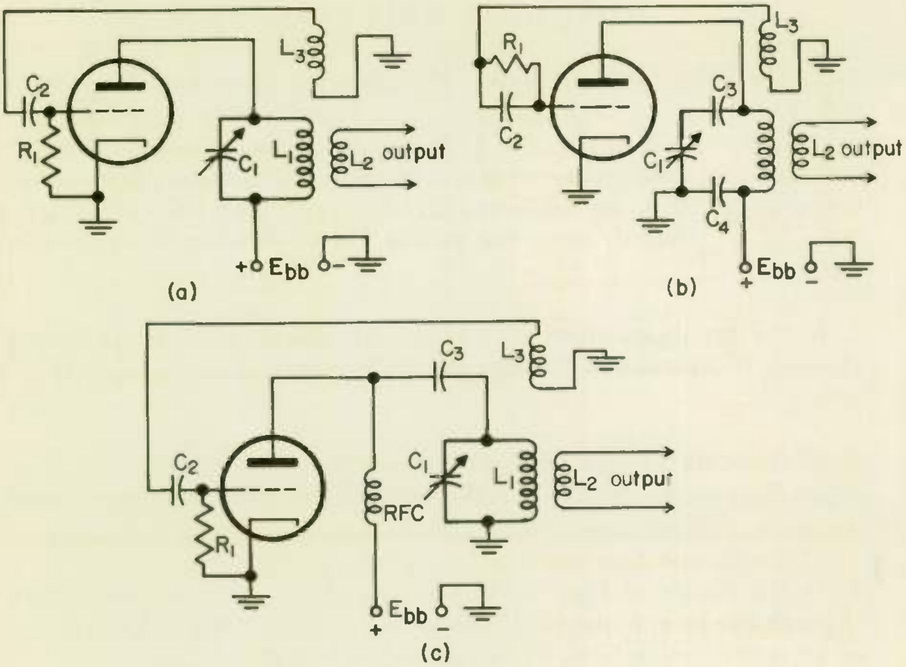

Fig. 7 Several arrangements of the tuned plate Armstrong oscillator.

grid circuits are the same, the principle of operation of both circuits is the same. It makes no difference whether R_1 is shunted across C_3 as in (b) or connected directly between grid and ground as in (a). Since L_1 has negligible d-c resistance, R_1 in (b) is electrically connected between grid and ground for d-c bias currents, just as it is in (a).

In Fig. 7(a) the tuned tank is in the plate circuit. It is series fed because both the d-c and a-c signals pass through C_1L_1. A signal is coupled from L_1 into L_3, which provides the feedback from plate circuit to grid circuit needed to provide an input signal to the grid.

The circuit of Fig. 7(a) presents a practical difficulty in that the rotor plates of C_1 cannot be grounded, since to do so would short out the power supply E_{bb}. Both sets of plates must be insulated from the chassis, and the rotor tuning shaft must also be well insulated to prevent shock. This problem is eliminated in the circuit of Fig. 7(b) by the use of capacitors C_3 and C_4 to block the d-c power from C_1. The rotor of C_1 can now be grounded as indicated.

The use of shunt feed as in Fig. 7(c) also allows C_1 to be grounded, since C_3 keeps d-c power out of the tank circuit.

WHAT HAVE YOU LEARNED?

1. In the Armstrong oscillator, the resonant tank may be located either in the (a) __________ or (b) __________ circuit and we may use either (c) __________ or (d) __________ feed. The use of shunt feed with the tuned plate arrangement permits the rotor plates of the tuning capacitor to be connected directly to ground; thus eliminating a (e) ______ hazard, since the tuning circuit is completely isolated from (f) ______.

2. In the circuit arrangement of Fig. 7(c), would there be any danger of shock if capacitor C_3 become short-circuited? (a) ________ Why? (b) ____.

3. In servicing a circuit such as that shown in Fig. 6(a), you find resistor R_1 is open-circuited. Could the oscillator continue to operate? (a) ______ Why? (b) ________________________________.

4. In the circuit of Fig. 7(a) the a-c signal (a) *(does) (does not)* flow through the power supply. If this is objectionable, it can be prevented by connecting a large bypass capacitor across (b) ______.

5. In the circuit of Fig. 7(c) the a-c signal (a) *(does) (does not)* flow through the power supply. The circuit component that makes this the case is (b) ______.

6. In the circuit of Fig. 7(a) both the d-c and a-c current pass through L_1. In Fig. 7(c) only the a-c component passes through L_1. Will the signal induced in L_3 be the same in both cases? (a) __________.
Why? (b) ____.

7. The feedback coil in an Armstrong oscillator is called a (a) ______ coil. The feedback coil in Fig. 7(a) is (b) ______.

ANSWERS

1. (a) Grid (or plate); (b) plate (or grid); (c) series (or shunt) (d) shunt (or series); (e) shock; (f) E_{bb}
2. (a) Some (b) The power supply is then shorted through L_1 to ground. The short should reduce E_{bb} to a relatively low value and thereby reduce the danger.
3. (a) No (b) With no d-c path between grid and cathode, the tube will probably block and become inoperative.
4. (a) Does; (b) E_{bb} 5. (a) Does not; (b) RFC
6. (a) Yes (b) Transformer action transfers only a-c. The d-c component in

L_1 has no effect on the voltage induced in L_3.
7. (a) Tickler; (b) L_3

10

THE HARTLEY OSCILLATOR . . . The tickler coil L_3 can just as well be placed in the cathode circuit, as in Fig. 8(a). This is because the plate and cathode carry the same a-c component, and therefore the feedback from L_3 to L_2 is identical whether L_3 is in the plate or the cathode circuit. Compare Figs. 4 and 8(a) carefully. You will note that they are identical except for the moving of L_3 from the plate circuit to the cathode circuit.

In Fig. 8(a) the bottom of L_2 connects to the top of L_3. That being the case, there is no longer any reason why L_2 and L_3 need be two separate windings. We can just as well use a single coil, as in Fig. 8(b), and then tap it. Figure 8(b) differs from (a) in that C_2 of the tank circuit is shown across both L_2 and L_3, rather than across L_2 only as in (a). In (b) both L_2 and L_3 are part of the inductance of the tank circuit, since C_2 is across both. This increases the tank circuit inductance over that of (a), where only L_2 is part of the tank circuit.

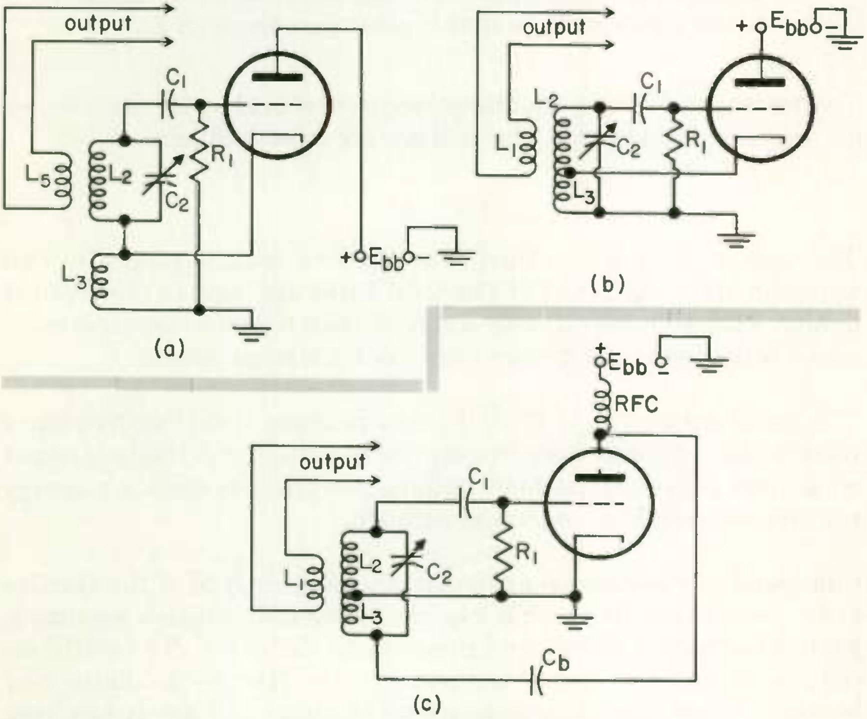

Fig. 8 The Hartley oscillator. (a) Its evolution; (b) the series-fed Hartley oscillator; (c) the shunt-fed Hartley oscillator.

The added inductance of Fig. 8(b) is an advantage, since it makes it possible to use a smaller value for C_2 to obtain resonance at the desired frequency. Or, alternatively, fewer turns can be used on the L_2L_3 winding than are necessary when L_2 alone is used for the tank circuit inductance.

The circuit of Fig. 8(b) is called a *Hartley oscillator*. It is identified by the fact that no tickler coil is used. Instead, the tank circuit inductance is tapped and feedback is obtained by feeding part of the amplified signal from the plate-cathode circuit through a section of the tank circuit inductance. In drawing Hartley oscillator circuits, remember that the cathode always connects to the inductance tap as in Fig.8(b). This assures that the feedback is in proper phase for the circuit to oscillate.

The Hartley circuit of Fig. 8(b) is series fed because both the d-c and a-c components of plate-cathode current pass through L_3. Occasionally, Hartley oscillators are connected for shunt feed, as in Fig. 8(c). The a-c signal to energize L_3 is now taken from the plate. Choke RFC blocks the a-c component so that it must pass through L_3.

The series-fed Hartley oscillator circuit is considerably simpler, requires fewer components, and is therefore most frequently used.

The tank circuit coil in a Hartley oscillator is usually tapped so that approximately one-tenth of the total turns are used in place of the tickler. That is, however, only a rule of thumb, and some experimentation is needed to set the tap correctly for a given circuit.

The series-fed circuit of Fig. 8(b) may produce some line-frequency hum in the output at high frequencies because the cathode is not at r-f ground potential. At high frequencies, there is some a-c energy transfer between the heater and cathode.

Compared to the Armstrong circuit, the performance of the Hartley at frequencies above 40 mc is superior, since the feedback winding is part of the tuned circuit and presents no difficulty. By careful arrangement and selection of components, the Hartley oscillator may be made to operate at frequencies up to about 150 mc. It has been widely used in FM (frequency-modulated) receivers operating in the 88- to 108-mc band.

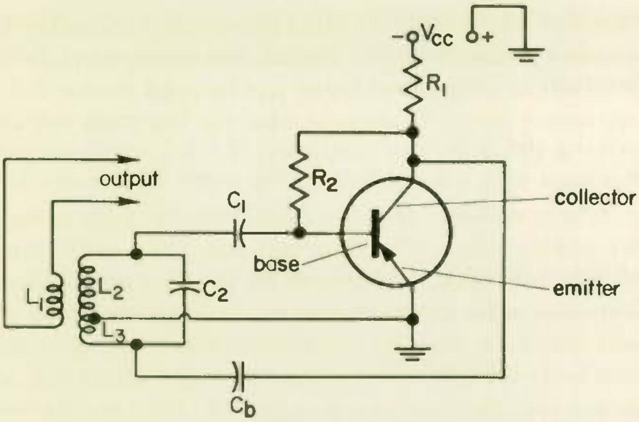

Fig. 9 **Shunt-fed transistor Hartley oscillator.**

In its shunt-fed form the Hartley circuit makes an excellent transistor oscillator. The circuit is shown in Fig. 9. Compare Fig. 9 with Fig. 8(c), remembering that the collector of a transistor corresponds to the plate of a tube, the emitter to the cathode, and the base to the grid. Resistor R_1 in Fig. 9 replaces RFC in Fig. 8(c). You will remember from preceding lessons that either a choke or a resistor can be used to block the a-c component. A resistor is generally used with transistors because, with the lower power and voltage involved, the d-c power and voltage lost by using a resistor in place of a choke is not serious.

Resistor R_2 in Fig. 9 is of the proper value to limit the base-emitter d-c bias current to the desired value for correct operation. The vacuum-tube and transistor Hartley circuits compared are identical except for the differences mentioned.

WHAT HAVE YOU LEARNED?

1. In the Hartley oscillator, the feedback coil is in the form of a tapped section of the tank (a) ________________. If the tuning coil consists of 100 turns of wire, the tap is placed about (b) __________ turns from the (c) ______________ initially. The exact placement for best results is then determined (d) ________________________. In the series-fed vacuum-tube circuit, some line-frequency (e) ____________ is present in the output because of energy transfer between the (f) ______________ and ____________.

2. In the circuit of Fig. 8(c), if capacitor C_b became short-circuited, E_{bb} would be (a) ____________ to ground through the (b) ________ portion of the oscillator coil.

3. If you were servicing the defective oscillator of Problem 2, would you expect to find a high or a low voltage at the plate of the oscillator? ___________ .

4. In the circuit of Fig. 9, what is the purpose of C_b? ______________
____ .

ANSWERS

1. (a) Inductance; (b) 10; (c) bottom; (d) experimentally
   (e) hum; (f) heater and cathode
2. (a) Shorted; (b) L_3 3. Low
4. It prevents the d-c power from being shorted to ground through L_3. If it were not for the need of blocking the d-c, the collector could be connected directly to the bottom L_3.

11 THE COLPITTS OSCILLATOR . . . The Colpitts oscillator of Fig. 10 is identical to the shunt-fed Hartley oscillator of Fig. 9 except for the method of coupling energy from the plate back to the tuned grid tank circuit. In Fig. 8(c) coupling is accomplished by feeding plate signal through L_3 to ground. In Fig. 10 capacitor C_2 of Fig. 8(c) is replaced by two series capacitors, C_{21} and C_{22}, and the plate energy couples back to the tank circuit by passing through C_{22} to ground. Thus, energy lost in the oscillating tank circuit is replaced by the regular recharging of C_{22} by the amplified signal fed back from the plate.

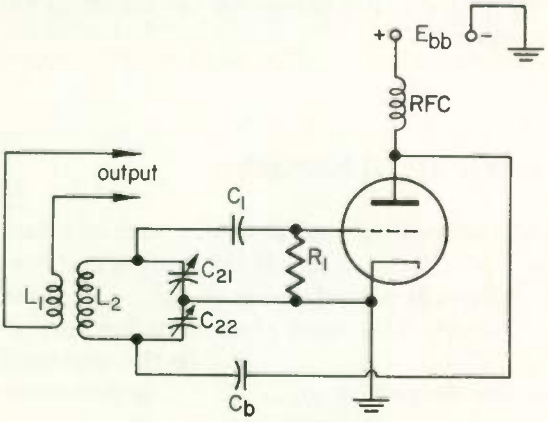

Fig. 10 Colpitts oscillator (shunt fed).

You may be puzzled as to how you can have two capacitors (C_{21} and C_{22}) in a resonant circuit. Remember that the combined capacitance of two capacitors in series is figured in the same way that the combined resistance of two resistors in parallel is figured. Suppose that C_{21} and C_{22} are each 500 pf. Then their combined capacitance is $500 \div 2 = 250$ pf. This means that the action and resonant frequency of the tank circuit of Fig. 10 is the same as it would be if C_{21} and C_{22} were replaced by a single capacitor with a capacity of 250 pf.

Note that capacitor C_b is not really needed to keep E_{bb} from shorting to ground. Its purpose when used is to keep the high d-c voltage off C_{21} and C_{22}, so that these variable capacitors may be of a lower voltage rating.

The Colpitts oscillator is identified by the use of two capacitors (or a split capacitor) in the tank circuit, the cathode being tied to the junction between the two. Because d-c and a-c cannot both pass through the feedback coupling component C_{22}, series feed for a Colpitts oscillator involves additional complications, and it is therefore not widely used.

The Colpitts oscillator holds its frequency somewhat better than the Hartley oscillator does, and it is therefore quite popular, particularly at high frequencies.

The transistor version of the Colpitts oscillator is shown in Fig. 11. Note its close similarity to the tube circuit. Capacitor C_b of Fig. 10 is not needed in the transistorized circuit because such low voltages are involved that insulation against high voltages is not a problem. Tuning is accomplished by varying the magnetic core associated with L_2. Tuning could, of course, also be accomplished by using variable capacitors as shown in Fig. 10.

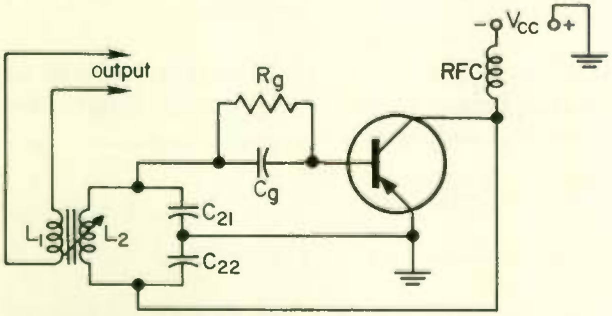

Fig. 11 Transistor Colpitts oscillator.

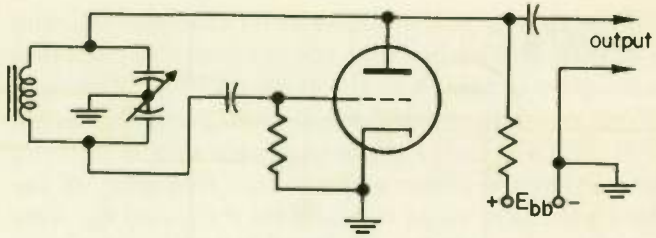

Fig. 12 A Colpitts audio oscillator.

The tank circuit inductance of an audio-frequency oscillator requires an iron core in order to obtain enough inductance to resonate at a sufficiently low frequency. The use of a Colpitts circuit, as in Fig. 12, eliminates the problem of tapping the iron core choke, which would be necessary if a Hartley oscillator were used.

WHAT HAVE YOU LEARNED?

1. Three types of oscillators have been discussed so far in this lesson. They are distinguished by the method by which plate circuit signal energy is coupled back to the grid circuit. When the coupling is by the means of a separate coil, the circuit is called an (a) __________ oscillator and the feedback coil is called a (b) __________. When the feedback is through a section of the tuned tank circuit inductance, the circuit is called a (c) __________ oscillator; when through part of the tank circuit capacitance, it is called a (d) __________ oscillator. All three types require the use of a choke in the power supply line when (e) ________ fed.

2. In servicing the oscillator of Fig. 10 you find zero d-c voltage on the plate of the tube, although E_{bb} is normal. The likely trouble is that ________________.

3. In servicing the oscillator of Fig. 10 you find the plate current to be low and of varying value, being zero much of the time. What component would you first suspect as faulty? ________________.

ANSWERS

1. (a) Armstrong; (b) tickler; (c) Hartley; (d) Colpitts; (e) shunt
2. The choke RFC is open.
3. Grid leak resistor R_1 is probably open . . . If there is no d-c path between grid and cathode in any circuit, plate current will cut off or be low and erratic.

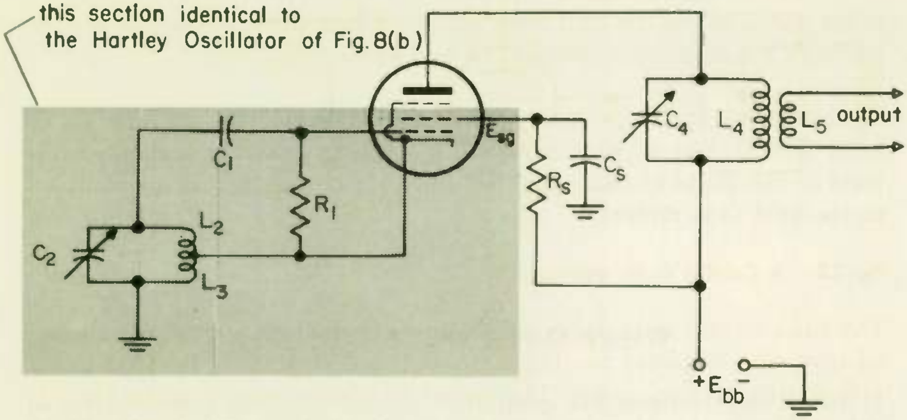

Fig. 13 The electron-coupled oscillator.

12 THE ELECTRON-COUPLED OSCILLATOR . . . In all the oscillator circuits discussed so far, the output is coupled to the tuned tank circuit. The trouble with this arrangement is that changes in the output load tend to cause the oscillator frequency to vary slightly. In the *electron-coupled circuit* of Fig. 13, the output is isolated from the oscillator section, so that load changes do not affect frequency. Consequently, the electron-coupled oscillator has better frequency stability than the oscillators previously discussed.

The electron-coupled oscillator requires a tube with a screen grid. The screen grid can be considered as dividing the circuit into two parts, the grid circuitry where the oscillations are formed (the shaded area in Fig. 13), and the plate circuitry from which the output is taken.

In Fig. 13 we can consider the cathode, control grid, and screen grid of the pentode as forming the elements of a triode tube, with the screen grid acting as the plate. The shaded circuit is then identical to the Hartley oscillator of Fig. 8(b), except that no output circuit is coupled to the grid tank circuit.

The screened area of Fig. 13 functions like any other Hartley oscillator. The oscillations, being applied to the grid through C_1, give the plate current an a-c component. This a-c component passes through the plate tank circuit C_4L_4 and causes this tuned circuit to oscillate. The output L_5 is coupled to the plate tank circuit and is therefore isolated from the Hartley oscillator section of the circuit.

The plate tank circuit, C_4L_4 in Fig. 13, can be tuned to the second or other harmonic of the grid tank circuit. When this is done, the circuit becomes a frequency multiplier as well as an oscillator.

There are a number of variations of the basic electron-coupled oscillator circuit, but all are identified by noting that the screen grid is used as the plate of the oscillator and that the output is not coupled to the grid tank circuit.

WHAT HAVE YOU LEARNED?

1. In an electron-coupled oscillator using a pentode tube, the three electrodes of the tube connected directly in the oscillator circuit are the (a) ____________, the ____________, and the ____________. The remaining electrodes, the (b) ____________ and (c) ____________ act only to provide isolation and power amplification. Thus, the electron-coupled oscillator acts the same as a separate (d) ____________ followed by a (e) ____________ amplifier with provision for (f) ____________ between them.

2. In a certain piece of equipment you find an electron-coupled oscillator similar to that shown in Fig. 13. In attempting to correct the trouble quickly you change the tube, but you still do not obtain oscillation. A check with your VTVM indicates the screen voltage is very low. What component should you immediately suspect and why would it cause oscillation to cease? ______________________________

____.

ANSWERS

1. (a) Cathode, grid and screen; (b) suppressor; (c) plate
   (d) oscillator; (e) power; (f) isolation
2. The screen bypass capacitor C_s... If it were shorted, E_{sg} would be low, which would reduce tube amplification and thereby provide insufficient feedback for oscillations to be sustained.

13 THE TUNED-PLATE TUNED-GRID OSCILLATOR... A tuned-plate tuned-grid oscillator is shown in Fig. 14. Its name describes the circuit arrangement. Oscillations occur because of feedback from plate to grid through the plate-grid interelement capacitance of the tube C_{gp}. A triode tube is generally used, since there is not always sufficient feedback by this path in a pentode. The circuit is of particular interest because of the tendency of amplifiers with tuned plate and

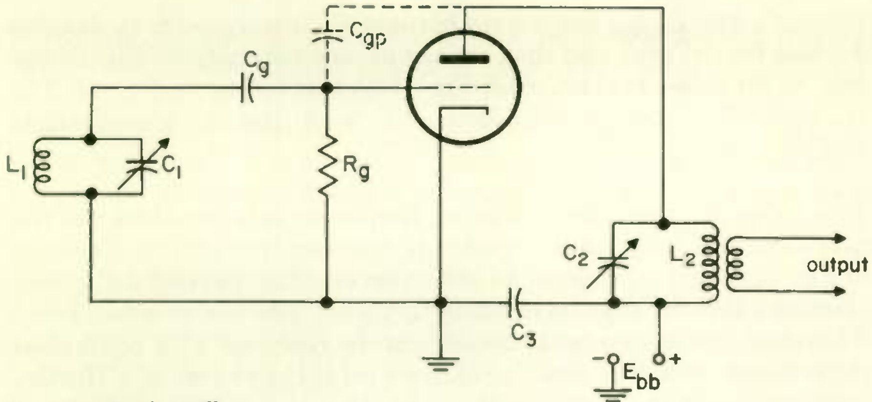

Fig. 14 TPTG oscillator.

grid circuits to generate undesired oscillations. Note that the TPTG circuit of Fig. 14 is identical to a tuned amplifier circuit, except the latter uses a pentode tube or neutralization to prevent oscillations.

The circuit of Fig. 14 oscillates at a slightly lower frequency than that to which the tank circuits are resonant. At the resonant frequency the feedback through C_{gp} is of such phase as to be degenerative, and therefore the circuit cannot oscillate at the resonant frequency of L_1C_1.

To see how the circuit oscillates, Fig. 14 is redrawn in Fig. 15(a) with the d-c circuitry removed so that the action of the a-c signal can be better followed. We don't need to show the d-c circuit, because all it does is furnish power. Capacitor C_3 is not shown in Fig. 15(a) because its only purpose is to block the d-c so it will not short to ground. Sim-

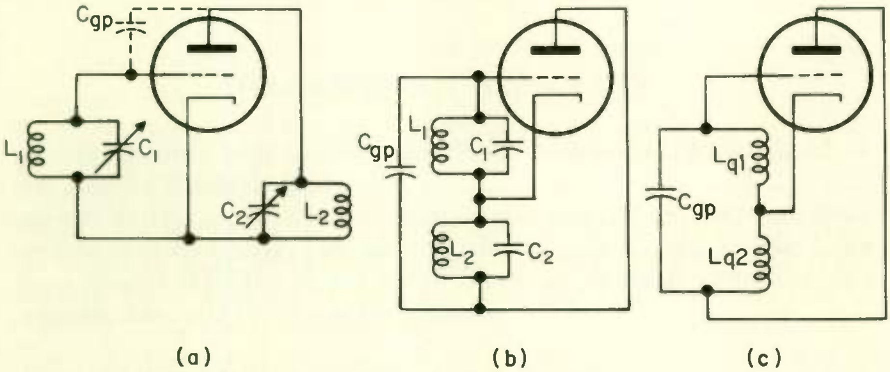

Fig. 15 Equivalent circuits for TPTG oscillator.

ilarly, C_g and R_g are not shown because their purpose is to develop d-c bias for the grid, and they are not needed for studying the a-c signal. As far as a-c is concerned, Fig. 15(a) is identical to Fig. 14. The circuit of Fig. 15(a) is redrawn in (b). Note that (b) is completely identical to (a).

Remembering that the oscillating frequency is lower than the frequency at which the tank circuits are resonant, the two tank circuits in Fig. 15(b) are equivalent to inductances. (Any parallel *LC* circuit operating at lower than its resonant frequency acts like an inductance.) Therefore, these two tank circuits can be replaced with equivalent inductances, which is done in (c). Now (c) is the circuit of a Hartley oscillator, with d-c circuitry removed. Hence, a TPTG oscillator is actually a form of Hartley oscillator.

Note in Fig. 15(c) that the grid-plate capacitance C_{gp} is the capacitance in the equivalent tank circuit. Hence, any variation of C_{gp} will vary the frequency of the oscillator. For this reason a TPTG oscillator does not hold its frequency as well as the Hartley or Colpitts oscillator does.

For low-frequency operation it may be necessary to add a capacitor between grid and plate in order to increase feedback. This extra capacitor is often required with a pentode tube at any frequency.

In practical operation the plate tank circuit of a TPTG oscillator is usually tuned to a higher resonant frequency than the grid tank circuit. This gives the highest output and the most reliable operation; if it is not done, the circuit may not oscillate.

WHAT HAVE YOU LEARNED?

1. In the TPTG oscillator, feedback is established through the (a) ____________ ____________ of the tube. The tank circuits are tuned to a frequency slightly (b) ____________ than the desired oscillator frequency. Feedback must be (c) *(regenerative) (degenerative)* for oscillations to occur. Feedback in a TPTG circuit is (d) ____________ at the resonant frequency of the tank circuits.

2. You are asked to determine why a TPTG oscillator will not oscillate. The tube is a pentode type. A check of all operating potentials

indicates they are satisfactory, and tuning has been properly performed. What should you do? ______________________________ .

ANSWERS

1. (a) Interelectrode capacitance; (b) higher; (c) regenerative; (d) degenerative
2. Switch tubes first to try to find one with a higher interelectrode capacitance. If this doesn't work, connect a small capacitor externally between the plate and grid.

14 THE DYNATRON OSCILLATOR . . . The dynatron oscillator is interesting for the manner in which it operates—by utilizing the "negative resistance" characteristic of a tetrode type of tube. Unlike the other oscillators so far discussed, this oscillator does not use the feedback principle.

If we place a negative resistance in series with a positive resistance, the two resistances cancel each other in the same manner as opposite reactances cancel each other. Then, once an oscillation starts in the tank, it continues indefinitely, since all losses, represented by the positive resistance, are overcome by the negative resistance of the tube.

Of course, a negative resistance in the form of a physical circuit element does not exist. However, a tetrode tube exhibits a negative resistance over part of its characteristic curve. This region is indicated between points *B* and *C* on the characteristic curve of Fig. 16. Notice, in this region, that as plate voltage increases, plate current decreases. This is contrary to Ohm's law, and we use the term "negative resistance" to explain the phenomenon. In the tetrode the negative resist-

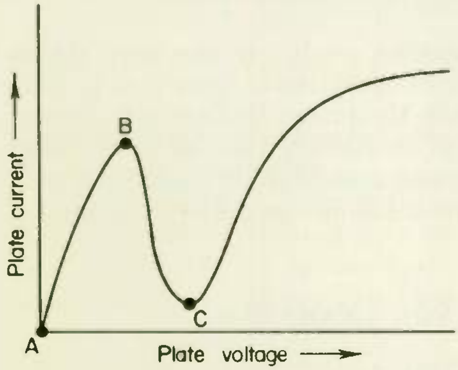

Fig. 16 **Negative resistance characteristics of a tetrode.**

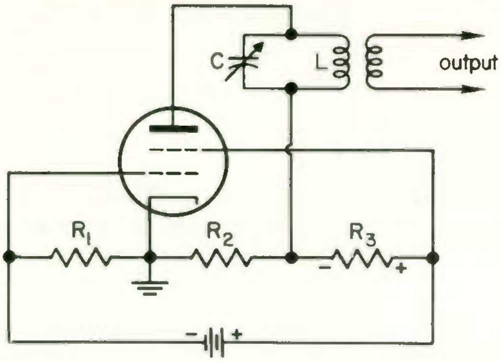

Fig. 17 A dynatron oscillator. Voltage drop across R_3 places plate d-c voltage at lower potential than screen.

ance is caused by the absorption by the screen grid of the secondary emission which occurs at the plate. It is important to note that this negative resistance occurs only when the plate voltage is less than the screen voltage.

A dynatron oscillator is formed by placing an appropriate tank circuit in series with the plate lead and maintaining the plate voltage at less than the screen voltage to achieve operation in the negative resistance region, as shown in Fig. 17. A variable direct voltage on the control grid governs the amplitude of the oscillation.

The dynatron is normally used at low frequencies only, and it exhibits good frequency stability. This stability accounted for its rather widespread earlier use for frequency calibration. The dynatron oscillator is identified by the fact that the plate is operated at a lower d-c voltage than the screen grid. Also, there is no feedback to the grid.

Although the dynatron oscillator is not much used any more, it is included here because its principle of operation is important in other electronic equipment. For example, the tunnel diode uses the principle of negative resistance both as an oscillator and as an amplifier. Another good reason why you should understand the dynatron oscillator is that questions about it are sometimes asked in examinations.

WHAT HAVE YOU LEARNED?

1. The operation of a dynatron oscillator depends on the (a) ________ resistance characteristics of a (b) ______________ -type vacuum tube.

The negative resistance acts to overcome the losses represented by the (c) ____________ of the tuned circuit at resonance. Thus, once oscillation starts in the tuned circuit, it (d) ____________ .To make the circuit operate satisfactorily, (e) ____________ voltage must be (f) ____________ than plate voltage.

2. Since the negative resistance of the tetrode acts to replace energy losses in the dynatron circuit, we may think of a negative resistance as a device that (a) ____________ energy rather than dissipates energy as a conventional (b) ____________ does.

ANSWERS

1. (a) Negative; (b) tetrode; (c) resistance; (d) continues;
   (e) screen; (f) higher
2. (a) Supplies, or provides; (b) resistor, or resistance

15 GENERAL COMMENTS ON *LC* OSCILLATORS . . . In order to draw the circuit diagram for an oscillator, or for any other type of circuit for that matter, never try to memorize the arrangement of components. Instead, try to reason out what is needed and why. For example, in any of the oscillator circuits shown thus far we know we need a *resonant circuit* for frequency control, *positive feedback* to provide regeneration (except for the dynatron), and an *amplifier* with appropriate bias and operating potentials.

The tuned circuit may be located in either the plate or the grid circuit. The tickler is arranged to provide mutual coupling. Bias is provided by the grid resistor and capacitor (R_gC_g) network, and, as long as there is a d-c return to ground, R_g can be connected either in parallel with C_g or between grid and ground.

If series feed is used, plate current passes through at least part of the oscillator coil. When shunt feed is used, d-c is blocked out of the signal circuits by a capacitor and a-c is blocked out of the supply voltage circuit by an r-f choke.

By using this method of analysis, you will find you can draw any circuit with the least amount of difficulty. When you know why and how a circuit operates, you will find that representing it schematically is extremely simple.

16 FACTORS AFFECTING OSCILLATOR STABILITY . . . One of the most common causes for variation in frequency and output level

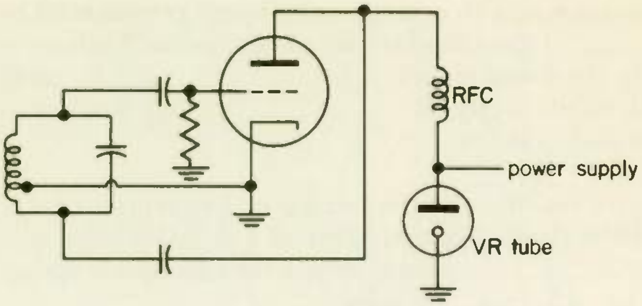

Fig. 18 **Using a VR tube to improve frequency stability.**

from an oscillator is variation in the supply voltage and, in the case of vacuum-tube oscillators, heater voltage. To minimize voltage variation, use is often made of a voltage regulator tube that holds the supply voltage within close limits. A typical arrangement of this type is shown in Fig. 18. A separate power supply for the oscillator stage is often used. Then variations in the voltage of the main power supply due to loading changes will not affect the oscillator frequency.

Mechanical vibration may cause changes in circuit inductance and capacitance, with resulting changes in frequency, so all components must be ruggedly mounted. Temperature changes affect frequency stability by producing expansion and contraction within the coil and capacitor of the tank circuit, thus slightly varying the values of these components.

Unless the load is isolated from the oscillator by a stage of amplification in between, changes in the load will affect frequency stability. For example, an antenna swinging in the wind will cause frequency instability when coupled directly to the output of an oscillator. Oscillator stability can be improved by using a tank circuit with a low *L*/*C* ratio. When this is done, variations in the value of stray capacitance is only a small percentage of total *C* value, and hence has only a slight effect on frequency. A high effective *Q* for the tank circuit and light loading of the oscillator are also essential requirements for frequency stability.

WHAT HAVE YOU LEARNED?

1. Some causes of oscillator instability are variations in (a) ____________________, components not mounted (b) ______________ enough, and changes in (c) ______________ .

2. Three prerequisites for good oscillator stability are a high effective (a) ________, a (b) ________ L/C ratio, and (c) ________ loading.

3. You are servicing an oscillator used in shipboard equipment. The complaint is instability, but it does not occur at all times. A check of the circuit shows that a good high-Q coil, low L/C ratio, and voltage regulation are provided. Also, the power requirements of the load are very light. What would you do? (Keep in mind that the instability does not occur at all times, and that this is a shipboard installation.)

____.

ANSWERS

1. (a) Supply voltage; (b) rigidly; (c) temperature
2. (a) Q; (b) low; (c) light
3. Suspect mechanical vibration. Since the trouble is not constant, it may be occurring only when the ship vibrates.

CRYSTAL OSCILLATORS

17 THE PIEZOELECTRIC EFFECT . . . When a crystal of any of certain substances is compressed or stretched (expanded), a voltage appears across opposite faces of the crystal. The polarity of the generated voltage changes when the mechanical force is changed from one that compresses the crystal to one that expands the crystal. Conversely, if a voltage is applied between the opposite faces of such a crystal, the crystal will either expand or compress, depending upon the polarity of the applied voltage.

The properties of certain crystals discussed in the preceding paragraph are called the *piezoelectric effect.* In an oscillator circuit, a piezoelectric crystal acts like a tuned tank circuit with a very high Q. Since the higher the Q the better the frequency stability of an oscillator, oscillator stability can be greatly improved by using a piezoelectric crystal for the frequency-determining tank circuit.

Although many crystalline substances are piezoelectric and a number, including Rochelle salts and tourmaline, find practical use in electronics, natural quartz is the only one used to any extent in oscillators. This is because quartz crystals have a higher equivalent Q than is obtainable from other crystals, and they therefore provide better frequency stability than it is possible to obtain from other piezoelectric crystals.

18 QUARTZ CRYSTALS . . . A perfect quartz crystal as mined from the earth is a hexagonal (six-sided) solid with pointed ends. The

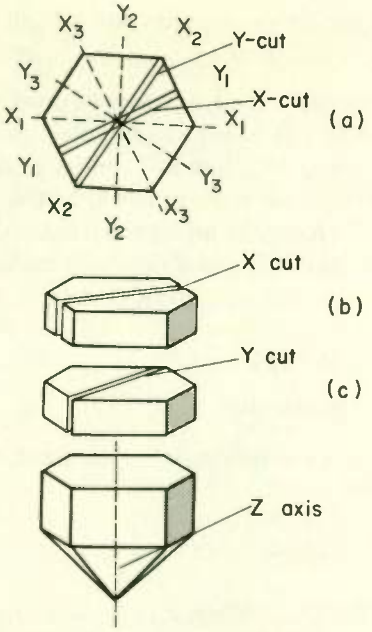

Fig. 19 Geometrical representation of a quartz crystal.

quartz crystal used for frequency control is a thin slab cut from the mother crystal. The properties of the slab depend to a considerable extent upon the direction of the cut with reference to the axis of the mother crystal.

A geometrical representation of a quartz crystal is shown in Fig. 19. The diagonals of the crystal, shown in part (a) of the figure, are called the *electrical axes* X_1, X_2, and X_3. Between these are the *mechanical axes* Y_1, Y_2, and Y_3. The vertical axis of the crystal is called the optical axis Z. A crystal so cut that its flat sides are perpendicular to an electrical axis is called an X-cut crystal, as shown in Fig. 19(b). A crystal whose sides are cut perpendicular to a mechanical axis is called a Y-cut crystal, as shown in Fig. 19(c). These are the two basic cuts; many others are used.

If an alternating voltage is applied across the faces of the crystal, the crystal alternately expands and contracts, so that the crystal vibrates. The amplitude of the crystal vibrations is very small at most frequencies but becomes quite large at one frequency, the *mechanical resonant frequency* of the crystal. This frequency depends upon the physical dimensions of the crystal, particularly its thickness. The thinner the crystal, the higher its resonant frequency. It should be noted that a crystal will not vibrate (oscillate) when a d-c voltage is applied but will only expand or contract, depending on the polarity of the applied voltage, as already noted. If the applied d-c voltage is great enough, the crystal will crack.

As already noted, a quartz crystal, when properly cut and ground, acts like a parallel resonant *LC* tank circuit of very high *Q*. Values in excess of 20,000 are always to be expected, and values over 1,000,000 have been observed under special circumstances. It is this property of a crystal which makes it useful for maintaining a constant frequency in an oscillator.

The resonant frequency of a crystal section depends almost entirely upon its dimensions, particularly its thickness in the direction of vibration. Although the normal upper limit for crystals is about 10 mc, some crystals are ground for use up to 30 mc. These, however, are very thin and cannot take overloading without fracturing.

19 HOW TEMPERATURE AFFECTS CRYSTALS . . . Temperature affects the resonant frequency to some extent. To eliminate frequency variation due to temperature change, the crystal is sometimes enclosed in an oven. Temperature of the oven is maintained at a constant value by a thermostat.

It is possible to cut a section from a crystal in such a way that the change in frequency due to change in temperature is almost zero. Such a crystal, shown in Fig. 20, is called an AT cut. Such a crystal exhibits extremely good frequency stability characteristics, even without a temperature-controlled oven.

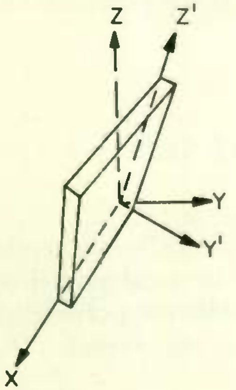

Fig. 20 An AT-cut crystal.

Besides the X, Y, and AT cuts, many others are used for special purposes, but they will not be discussed here. In connection with the X and Y cuts, it is important to note that the X-cut crystal has a negative temperature coefficient and the Y-cut crystal has a positive temperature coefficient. *A negative temperature coefficient simply means that as temperature increases, frequency decreases. A positive temperature coefficient means that as temperature increases, frequency also increases.*

This coefficient is expressed in terms of the number of cycles by which the frequency changes for each megacycle of the normal operating frequency for each degree of change of temperature in degrees centigrade. The negative temperature coefficient of the X-cut crystal is from -10 to -25 cycles per megacycle per centigrade degree. For example, suppose the frequency of operation is normally 5 megacycles and the temperature increases 5°. Also assume a negative temperature coefficient of -10 cps per mc per °C. Now, the frequency drift is $-10 \times 5 \times 5 = 250$ cps which, when subtracted from 5 mcs, gives a new operating frequency of 4,999,750 cps or 4999.75 kc.

For Y-cut crystals the temperature coefficient is usually about $+20$ cps per mc per °C. Any increase in frequency due to temperature rise is added to the normal operating frequency in finding the actual operating frequency.

20 HOW TO CLEAN CRYSTALS . . . A crystal will not operate properly unless its surfaces are kept free of grease and dirt. The crystal must be cleaned every time it is handled or removed from the holder. Carbon tetrachloride or equivalent cleaner applied with a soft clean cloth or facial tissue is recommended for cleaning a crystal. Soap and water are also satisfactory for this purpose if the crystal is carefully rinsed to remove all traces of the soap.

WHAT HAVE YOU LEARNED?

1. A quartz crystal has three axes called the (a) ____________, (b) ____________, and (c) ____________ axes. When a crystal is so cut that its sides are perpendicular to the electrical axis, it is called an (d) __________ cut crystal; and when its sides are perpendicular to the mechanical axis, it is called a (e) ________ cut crystal.

2. When an a-c voltage is impressed across the faces of a crystal, it

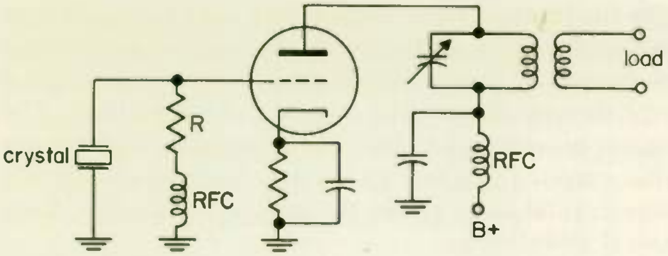

Fig. 21 **Miller crystal oscillator.**

makes the crystal (a) ______________. This is called the (b) __________ __________ ______________. If a d-c voltage is applied across the crystal, it will either (c) ______________ or ______________ depending on the polarity of the applied voltage. If the d-c voltage is excessive, the crystal will (d) ______________.

3. You are working on a crystal-controlled marine transmitter designed to operate at 500 kc. The transmitter uses an *X*-cut crystal having a negative temperature coefficient of − 15 cps per mc per °C and the temperature is 8°C above normal. What is the actual operating frequency of the transmitter? ______________.

4. In working on the same transmitter as in Problem 3, you visually inspect the crystal by removing it from its holder. What steps should you take before replacing the crystal in the holder? ______________

ANSWERS

1. (a) Electrical; (b) mechanical; (c) optical; (d) *X*; (e) *Y*
2. (a) Vibrate; (b) piezoelectric effect; (c) expand or contract
   (d) crack, fracture, or break
3. 499.94 kc . . . 15 × 0.5 × 8 = 60, and 500,000 − 60 = 499,940 cps
4. Clean the crystal thoroughly with carbon tetrachloride or with soap and water. When replacing it, hold it by the edges so the crystal does not pick up oil or dirt from your fingers.

21 THE MILLER CRYSTAL OSCILLATOR . . . Crystals are used in two types of oscillator circuits known as the Miller and Pierce circuits. The diagram of a simple Miller crystal r-f oscillator is shown in Fig. 21. Earlier we mentioned the adaptability of the quartz crystal as an equivalent for a parallel circuit tuned for a particular frequency. Thus, the Miller crystal oscillator is simply a modified version of the TPTG circuit, with feedback obtained through the interelectrode capacitance of the tube.

At low frequencies the interelectrode capacitance may be insufficient to provide enough feedback for sustained oscillation and an external capacitor may be connected from anode to grid. The cathode resistor is used as a safety element should the crystal fail to oscillate. The RFC and grid resistor in series act to limit the alternating grid voltage (and the r-f crystal current) to a safe value. Too large an alternating voltage across the crystal may cause the crystal to shatter from excessive mechanical vibrations.

The equivalent capacitance of the crystal serves as the grid leak capacitor. The RFC in the grid circuit increases the r-f impedance between grid and ground. This prevents the relatively low impedance of a resistor only from shorting the r-f voltage at the grid.

A small variable capacitor is sometimes placed in parallel with the crystal. It is possible to adjust the frequency of a crystal oscillator up to about 100 cps per mc by varying this capacitor. This provides an inexpensive means of fine frequency control. Since the Miller circuit is really a form of TPTG oscillator, the plate circuit is tuned to a higher frequency than the crystal frequency. Unless this is done, the circuit will not oscillate.

The tube plate current is indicated most readily by a milliammeter connected in the cathode circuit of the tube. The value of the plate tuning capacitor should be adjusted to give minimum d-c current through the tube (indicating resonance), and then the capacitance should be decreased slightly. This raises the resonant frequency of the tank circuit above the operating frequency, thus assuring stability of operation.

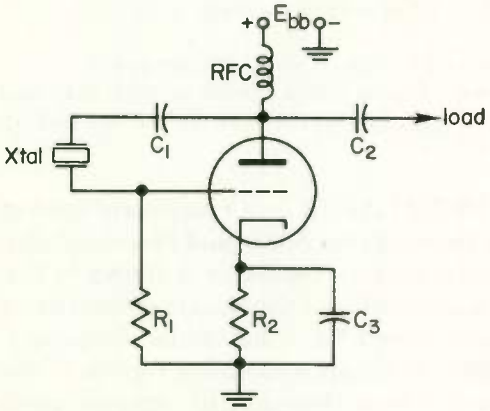

Fig. 22 **Pierce crystal oscillator.**

The output power of a crystal oscillator is usually small owing to the fragility of the crystal. Coupling to an external load is made from the plate of the tube, and it should be loose to avoid overloading. If greater power is required, the oscillator may be followed by one or more amplifier stages, and this is usual in transmitters.

22 THE PIERCE CRYSTAL OSCILLATOR

... In the Pierce oscillator, Fig. 22, the crystal is connected between the grid and plate. Capacitor C_1 is a blocking capacitor in series with the crystal to protect it from d-c plate voltage. This capacitor is not always used. Bias is provided in the cathode circuit by R_2 and C_3 and in the grid circuit by R_1 and the capacitance of the crystal holder.

The power output of the Pierce oscillator is limited to a few watts at most. The r-f current flowing through the crystal must be small to prevent heat from developing and causing the frequency to drift. The voltage across the crystal must also be kept moderately low to avoid fracture. Since the Pierce oscillator is untuned, it is advantageous for use where it is frequently desired to change frequency. To do so, it is only necessary to change the crystal. No retuning is required.

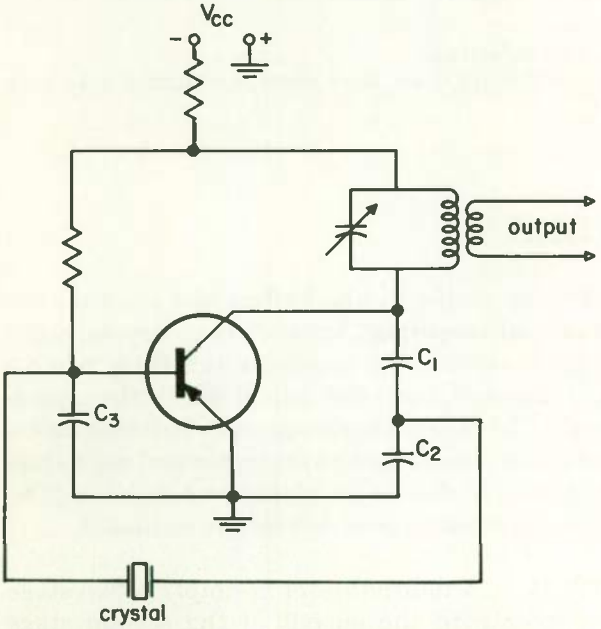

Fig. 23 Junction transistor crystal oscillator.

23 THE TRANSISTOR OSCILLATOR . . . A crystal oscillator circuit using a junction transistor is shown in Fig. 23. The crystal establishes the feedback between the collector and base. Capacitors C_1 and C_2 serve as a voltage divider to reduce the alternating voltage to the crystal. Capacitor C_3 is added to balance C_2 so that the proper phase relation of the feedback voltage from the crystal is maintained. The circuit demands very little power from the battery and, as a result, does not drift from heating.

WHAT HAVE YOU LEARNED?

1. The Miller crystal oscillator is electrically equivalent to the (a) ________ oscillator with the crystal replacing the (b) ________ *LC* tank circuit. Feedback is obtained through the (c) ________ capacitance of the tube.

2. In servicing a Miller-type crystal oscillator you find an open in the r-f choke in the grid lead. What effect would this have on operation? ________________________.

ANSWERS

1. (a) TPTG; (b) grid; (c) interelectrode
2. Tube would block and oscillations cease, since there is no longer a d-c path between grid and ground.

RC OSCILLATORS

RC oscillators do not depend on the flywheel effect of a resonant circuit to determine the output frequency. Instead, they depend upon the rate at which charge is stored on a capacitor and then, when a certain level of voltage is reached, upon the rate at which the capacitor discharges the energy. This alternate charge and discharge action of the capacitor is often called the *relaxation principle,* and oscillators using this principle are generally classed as *relaxation oscillators.* The multivibrator is the most common type of relaxation oscillator.

24 THE MULTIVIBRATOR . . . A multivibrator is simply a two-stage resistance-coupled amplifier with the output of the second stage capacitively coupled back to the input of the first. Now, two stages

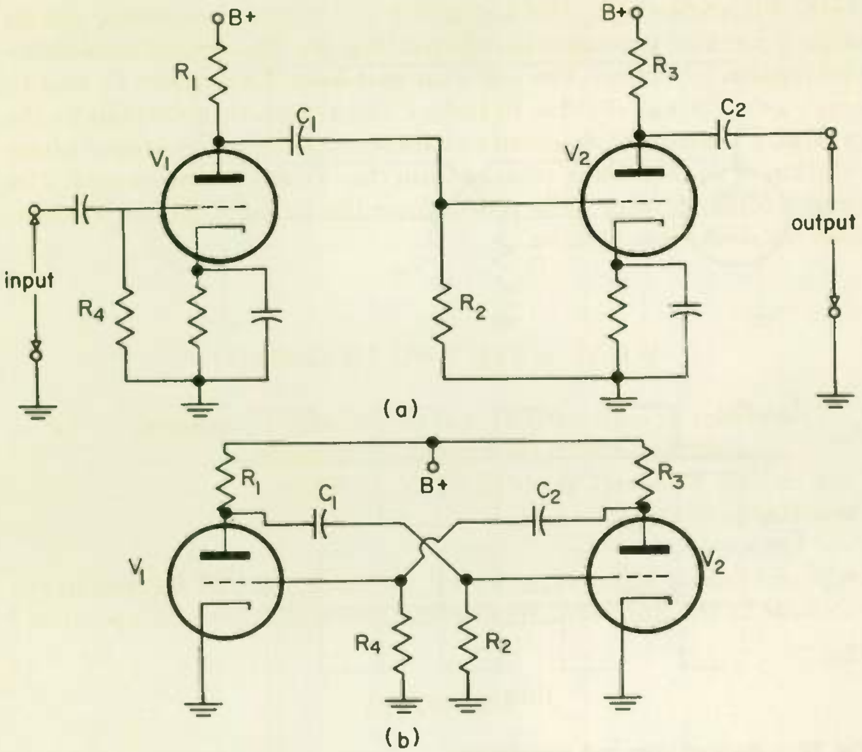

Fig. 24 Showing that a multivibrator is simply two stages of *RC* amplification with the output of each stage capacitively coupled to the input of the other.

of *RC*-coupled amplification are usually drawn as shown in Fig. 24(a), but the multivibrator cycle of operation is usually illustrated by the arrangement of components shown in Fig. 24(b). Notice that the only differences between the two figures are that the cathode bias arrangement of (a) is removed in (b), where the cathodes are returned directly to ground, and output and input of (a) are connected together in (b). Since each stage of an *RC* amplifier inverts the input signal (180° phase shift between input and output), two stages provide 360° of phase shift. Since 360° is a complete circle, this means that the output from the second stage is in phase with the input to the first. The signal taken at the output of V_2 in Fig. 24(b) and coupled to the grid of V_1 provides regeneration (positive feedback), and this is the condition required for sustained oscillation.

Figure 24(b) is redrawn in Fig. 25 so that we may discuss the waveforms associated with the operation of the multivibrator.

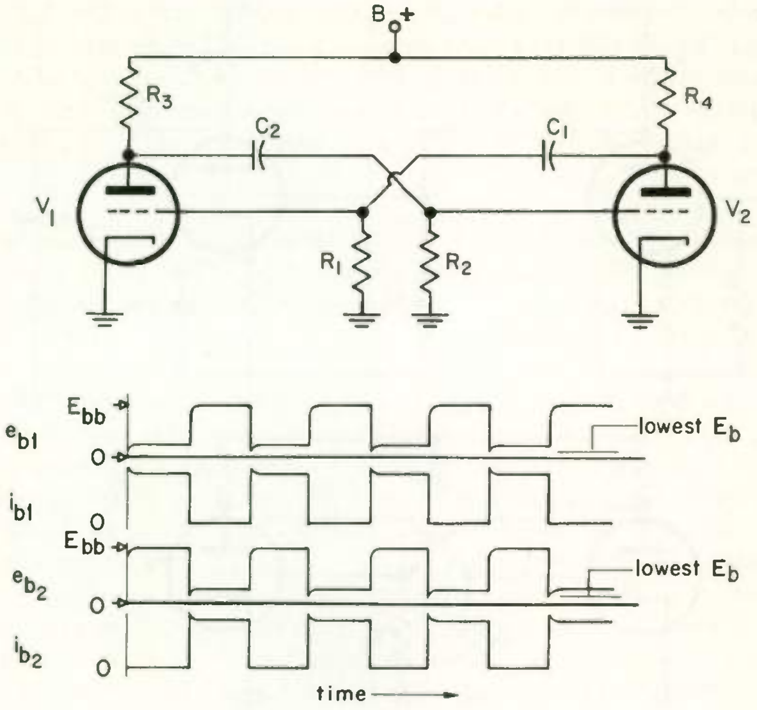

Fig. 25 Multivibrator and waveforms.

When plate voltage is first applied, each tube conducts and capacitors C_1 and C_2 become charged as the voltage increases. A perfect balance of the initial plate currents is impossible. One tube always conducts more than the other because of such factors as inherent tube noise and unequally distributed emission along the length of the cathode. This unbalance, regardless of how small it may be, eventually results in the plate current of one tube being maximum while plate current in the other tube is cut off.

Suppose the initial conduction of V_1 is slightly greater than that of V_2. The voltage drop across R_3 increases, with a corresponding decrease in the plate voltage of V_1. Because this plate voltage is applied across the R_2C_2 network, and because the charge across C_2 cannot change instantaneously, the full negative change in e_{b_1} (the plate voltage applied across V_1) appears across R_2. This negative-going voltage, applied between grid and cathode of V_2, causes a decrease in V_2 plate current, a decrease in the drop across R_4, and an increase in plate voltage across V_2.

The increase in plate voltage e_{b_2} is, in turn, applied across the R_1C_1 coupling network and is of such polarity as to make the grid of V_1 swing more positive. This further increases the plate current of V_1 and amplifies the action outlined above. Operation continues as described until V_2 is cut off and the plate current of V_1 is at its maximum value.

Thus, the slight initial unbalance starts a cumulative feedback action that cuts off one tube and causes maximum plate current in the other. The action described is extremely fast owing to the regenerative feedback between the tubes.

With V_2 cut off and V_1 conducting, a switching action begins. The coupling capacitor C_2 must now discharge, since the plate-to-cathode voltage of V_1, which is applied to R_2 and C_2, has been abruptly reduced. The capacitor discharge path is through R_2, and the grid voltage of V_2 rises toward 0. When the grid voltage, which is moving in a positive direction, reaches cutoff, V_2 starts to conduct. The increase in plate current of V_2 causes a corresponding decrease in its plate-to-cathode voltage. The cumulative action from this point on is exactly the same as described for the preceding half-cycle. In a very short time, V_1 is cut off and V_2 is conducting maximum plate current. The plate-to-cathode voltage of V_1 rises to the value of supply voltage E_{bb}, and C_2 charges through the low-resistance cathode-to-grid path of V_2. A complete cycle has now occurred.

The output voltage, which can be taken from either plate, is a series of rectangular pulses.

WHAT HAVE YOU LEARNED?

1. A multivibrator is simply (a) ________ stages of *RC*-coupled amplification with the (b) __________ of each stage capacitively coupled to the (c) ______________ of the other. Multivibrator action starts because of the slight (d) ____________ that always exists between two tubes or transistors. Because of the (e) ____________ feedback, the stages are alternately driven (f) _______ and (g) _______ , producing a (h) ________ wave at the output.

ANSWERS

1. (a) Two; (b) output; (c) input; (d) unbalance
(e) regenerative; (f) on; (g) off; (h) square

25 TUBE LIMITATIONS AT UHF . . . At frequencies below approximately 100 mc the electron transit time in a tube, that is, the time taken by electrons to travel from the cathode to plate, is small compared with the period of one cycle and, at any given instant, the number of electrons leaving the cathode is substantially the same as the number of electrons arriving at the plate. Therefore, the current (electron flow) approaching the grid is substantially equal to the current moving away from the grid. Since these currents are in opposite directions relative to the grid, the voltages they induce in the grid are equal and opposite and cancel each other.

As the operating frequency is raised above 100 mc, however, the transit time becomes increasingly important because of the shortening of the period of each cycle relative to the transit time. At frequencies above about 200 mc the transit time becomes an appreciable part of one period, and the currents approaching and leaving the grid are unequal. Thus, the voltages induced in the grid are unequal and do not cancel each other. This causes grid current which has the same effect as though a resistance were connected across the input, the value of this resistance decreasing as the frequency increases. In turn, this causes the input voltage to be seriously damped and, at ultrahigh frequencies, effectively shorted out. Thus, tubes are unsuited for use as oscillators at these frequencies and special oscillators, called the klystron and magnetron. must be used.

26 THE KLYSTRON . . . Before describing the klystron, let us examine some new concepts relating to its operation. Figure 26 shows a circuit drawn along conventional lines that illustrates how a stream of electrons may be *velocity-modulated,* that is, how the input signal can be used to change the speed of electrons in a constant current so that they are grouped into bunches.

The heater, cathode, and accelerating grid in Fig. 26 constitute an electron gun. Electrons emitted by the cathode are attracted to the accelerating grid as a result of the high, battery-applied, positive potential. Most of these electrons pass through the accelerating grid wires, which are wound in the form of an open mesh. This stream of electrons, moving with uniform velocity, then comes under the influence of the *buncher grids.* These grids are connected to the opposite ends of an oscillatory circuit consisting of L_1 and C_1 in parallel.

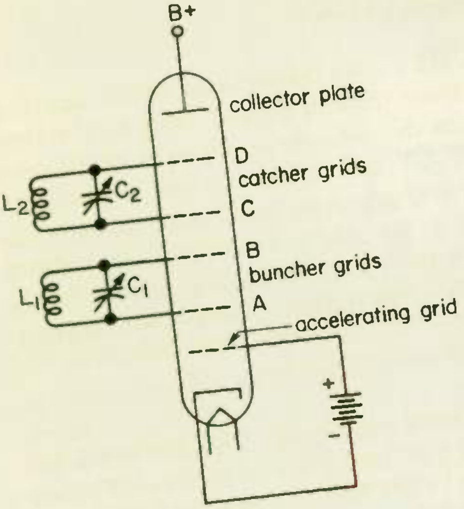

Fig. 26 How velocity modulation is accomplished.

The spacing between the buncher grids, the period of oscillation of L_1 and C_1, and the velocity of the electrons are so adjusted that an electron passes from grid *A* to grid *B* in the time required for one-half oscillation of L_1C_1. If an electron approaches the buncher assembly when grid *A* is passing through zero a-c potential, its velocity is not changed. By the time it reaches grid *B*, the potential will again be passing through zero so that its velocity is not affected. However, an electron passes through grid *A* when it is positive is accelerated (speeded up). Half a cycle later it passes through grid *B* and is further accelerated, since grid *B* is also positive at that time. An electron that passes through the buncher assembly a half-cycle later is decelerated (slowed down) by both grids, which are then negative. The stream of electrons leaving the buncher is, therefore, velocity-modulated; that is, the velocity is increased or decreased, depending upon the instant at which the electrons pass through the buncher.

In passing through the *drift space* between the buncher and *catcher*, the accelerated electrons tend to catch up with those ahead and the decelerated electrons slow down and mix with those behind. Consequently, the electron stream is bunched into groups when electrons enter the catcher circuit.

The catcher is similar in construction to the buncher. It is arranged to absorb energy from the velocity-modulated electron stream so that energy oscillating in the L_2C_2 tank circuit is reinforced. If electron

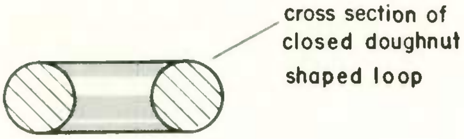

Fig. 27 **Cross section of a cavity resonator.**

approach catcher grid *C* when it is negative, they are slowed down and energy is absorbed from them. At this instant catcher grid *D* is positive. Half a cycle later, when the electrons approach grid *D*, the polarity of the grid has reversed so that energy is again absorbed.

If electrons approach the catcher grids when they are positive, the electrons are speeded up and energy is imparted (given) to them. However, the drift space is such that when grids *C* and *D* are negative, the approaching electrons are bunched and a great deal of power is absorbed by the catcher circuit. Very little power is given out to the bunched electrons during the other half-cycle. The electrons leave the catcher with a lower average velocity and are returned to the battery circuit by the collector plate.

27 RESONANT CAVITIES . . . The conventional oscillatory circuit consisting of a coil and capacitor assumes a somewhat different appear-

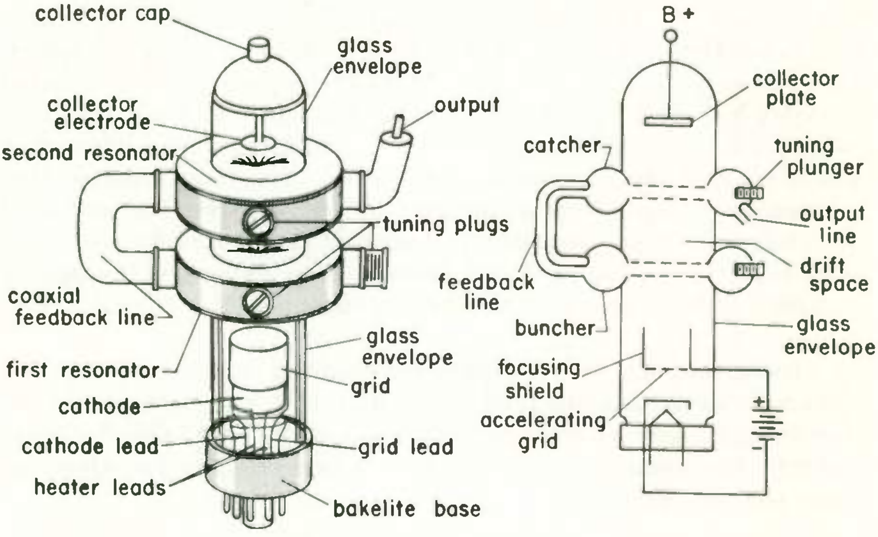

(a) Mechanical construction and diagram (b) Operating elements

Fig. 28 **A two-cavity klystron.**

ance at the very high frequencies generated by klystrons. At these frequencies, the resonant circuit takes the form of a *cavity resonator*. This doughnut-shaped hollow-metal chamber, shown in Fig. 27, is electrically a very high Q oscillatory circuit whose resonant frequency is determined by its diameter.

28 TYPICAL KLYSTRON . . . A sketch and a diagram of a typical klystron are shown in Fig. 28(a) and (b). As shown in (b), a uniform stream of electrons is produced by the heater, cathode, accelerating grid, and focusing shield. These electrons are directed through the buncher grids, where they are velocity-modulated to the frequency of the oscillations in this resonant cavity. In the drift space the electrons form into groups just before entering the catcher. The electron groups remain bunched at the oscillator frequency in the second resonant cavity. A part of the energy of the second cavity is fed back through the coaxial cable to the buncher cavity to maintain oscillations in it. Output power is carried from the catcher by a coaxial cable connected to a single-turn inductor inside the resonant cavity. The strong magnetic field in the cavity induces a current in the loop at the frequency of the waveforms generated.

The single-cavity klystron oscillator, called a *reflex klystron* and shown in Fig. 29, is considerably easier to adjust than the two-cavity klystron. The electron gun and first cavity resonator are identical in construction and operation to the two-cavity klystron. In place of the second cavity and resonator, however, the reflex klystron contains a *reflector electrode* which is operated at a high negative potential. It therefore repels the velocity-modulated stream of electrons in the

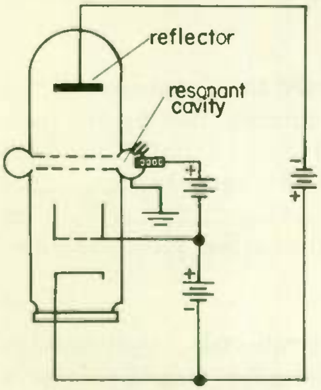

Fig. 29 Circuit diagram of a reflex klystron.

space between the cavity and the reflector. The bunched electrons are turned back to the cavity in the proper phase to give energy to the resonator. The spent electrons are then removed from the circuit by the cavity itself or by the accelerating grid.

As in the two-cavity klystron, the frequency of operation is adjusted by means of the plungers in the cavity circuit which change the physical dimensions of the cavity. The potential on the reflector electrode serves as a secondary control of the frequency because it alters the transit time and hence the phase of the feedback energy. It is adjusted to provide maximum r-f power from the output loop.

The r-f output power of the reflex klystron is very small, usually of the order of a few milliwatts. The klystron is commonly used as the local oscillator in radar receivers.

WHAT HAVE YOU LEARNED?

1. Electron transit time is the time taken by an electron in traveling from (a) ____________ to (b) ____________. At frequencies below about 100 mc, transit time is not important, since the currents approaching and leaving the grid are (c) ____________ and (d) ____________ and induce voltages in the grid that (e) ____________ each other. Above about 200 mc, however, this is no longer true. Then the voltages induced in the grid are (f) ____________ and produce (g) ____________ current. This acts the same as a (h) ____________ in the input circuit and may short out the input signal.

2. In the klystron, electron transit time is used to advantage and the electron stream is (a) ____________ modulated. During one half-cycle the resonator(s) absorb(s) a great deal of (b) ____________ from the electrons and during the other half-cycle give up but (c) ____________ power. Energy, returned either from a second (d) ____________ or by the action of a (e) ____________, is of the correct phase to maintain (f) ____________.

3. In servicing a radar receiver, you find the reflector supply voltage for a reflex klystron is abnormally low. What effect would this have on the klystron output? ____
____.

1. (a) Cathode; (b) plate; (c) equal; (d) opposite; (e) cancel
   (f) unequal; (g) grid; (h) resistance
2. (a) Velocity; (b) power; (c) little; (d) resonator
   (e) reflector; (f) oscillation
3. The output frequency will be changed if the voltage is still high enough to permit limited action by the reflector, but there will be no output if the voltage is too low to repel electrons back to the cavity resonator.

29 THE MAGNETRON . . . A magnetron is a special form of two-element tube containing the cathode that emits electrons and the plate that collects them. A high d-c voltage applied between these two electrodes sets up an electric field which tends to make the electrons move radially from the cathode to the anode. Besides this electric field, a strong magnetic field is set up within the tube by a heavy permanent magnet mounted externally. The magnetic lines of force pass between the pole faces, shown in Fig. 30, and cause the electrons to try to travel in circles around the cathode. Thus the electrons follow a curved path in moving from cathode to plate.

The curvature of the electron path depends on the relative strength of the electric and magnetic fields. Figure 31 shows three possible electron paths obtained by keeping the supply voltage constant and increasing the magnetic field strength. In Fig. 31(a) the magnetic deflection is small and the electron path is almost a straight line. In

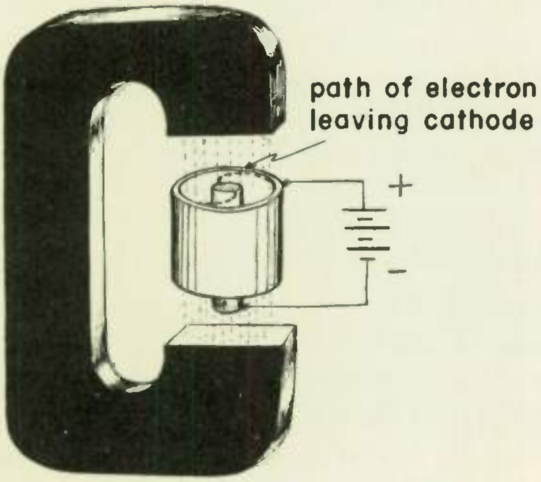

Fig. 30 Magnetron.

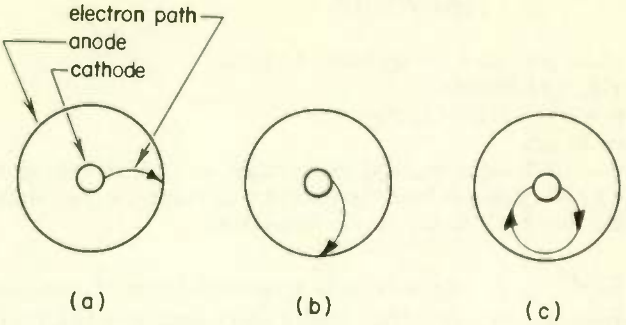

Fig. 31 Electron path with increasing magnetic field.

Fig. 31(b) a greater value of magnetic field strength causes the electron to spiral through 180° on its flight from cathode to plate. It is then on the point of missing the plate completely and being turned back to the cathode. If the magnetic field strength is increased slightly past this point, the flow of current from cathode to plate ceases abruptly, since the electrons are all returned to the cathode. This is illustrated in Fig. 31(c), and is the normal operation adjustment for a magnetron.

The condition indicated by the curve in Fig. 31(c) is determined by measuring the d-c current through the magnetron as the magnetic field strength is adjusted. The anode (plate) current cuts off abruptly when the critical field strength is reached. Under these conditions the magnetron is capable of producing oscillations of ultrahigh frequencies in an external circuit.

The different elements of a practical magnetron oscillator are shown in Fig. 32 with the permanent magnet omitted so that the construction can be better seen. The anode has a series of cavities (holes) with slots connecting them with the space between cathode and anode. The cavities act as resonant circuits at microwave frequencies, serving the same purpose as the familiar L-C tank circuits at lower frequencies. The electrons circling around the cathode couple energy into the cavities as they pass the slots. This energy causes the cavities to oscillate. The frequency is determined by the size of the cavities; the larger the cavities, the lower the frequency. The output loop shown is used for taking power from the magnetron.

While the average power developed by a magnetron is quite small, the magnetron can develop very large peak power during bursts of

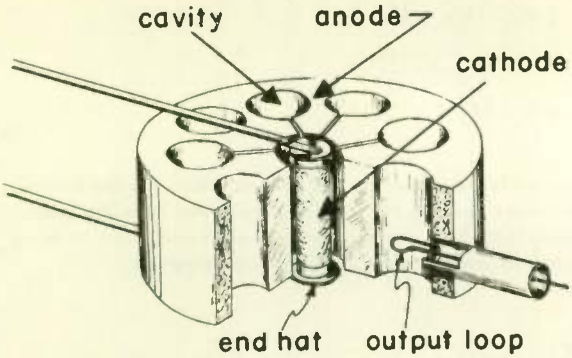

Fig. 32 Magnetron construction.

very short duration, and this makes it extremely useful for such applications as pulsed radar.

Since the anode block is exposed, it is operated at d-c ground potential to prevent severe shock to anyone who may come in contact with it. A high negative voltage is then applied to the cathode during the brief periods during which the magnetron is pulsed.

WHAT HAVE YOU LEARNED?

1. The magnetron is a (a) __________ -element tube. When a high (b) __________ voltage is applied between the two electrodes, it sets up an (c) __________ field that makes the electrons move (d) __________ from cathode to anode. An external magnet also establishes a strong (e) __________ field within the tube. Thus, the electrons follow a (f) __________ path from cathode to anode.

2. When the critical magnetic field strength is reached, the magnetron plate current (a) __________ abruptly, and the magnetron is then capable of producing sustained oscillations in an (b) __________ circuit.

ANSWERS

1. (a) Two; (b) d-c; (c) electric; (d) radially; (e) magnetic; (f) curved
2. (a) Stops; (b) external

LESSON 2407-3

OSCILLATORS

EXAMINATION

Circle the number of the correct answer for each question that follows. When you are finished, transfer the answers to the answer sheet by putting X's in the proper squares. When the graded answer sheet is returned to you, correct in this book any questions you may have missed. By doing so, you will have a record of the correct answers to all questions for review purposes.

1. A dynatron oscillator
   (1) Has the plate operating at a higher potential than the screen and exhibits good frequency stability.
   (2) Utilizes the negative resistance characteristics of a tetrode and exhibits good frequency stability.
   (3) Has the load electron coupled to the oscillatory circuit to provide isolation.
   (4) Provides feedback through the interelectrode capacitance of the tube.

2. The differences between the Colpitts and Hartley oscillators are
   (1) The Hartley uses a split capacitor arrangement to provide feedback, whereas the Colpitts uses a tapped coil for this purpose.
   (2) The Hartley uses the voltage developed across a portion of the oscillator coil for feedback, whereas the Colpitts depends on the negative resistance characteristic of the tube.
   (3) The Colpitts uses a split capacitor arrangement to provide feedback, whereas the Hartley uses a tapped coil for this purpose.
   (4) The Hartley circuit is always shunt fed, whereas the Colpitts may be either series or shunt fed.

3. Feedback in a TPTG oscillator is obtained
   (1) By inductive coupling between the input and output circuits.
   (2) By capacitive coupling between the input and output circuits.
   (3) Through the interelectrode capacitance of the tube.
   (4) As a result of the negative resistance characteristic of the tube.

4. A separate source of plate power is desirable for the crystal oscillator stage in a radio transmitter
   (1) To improve frequency stability.
   (2) To prevent overheating of the crystal.

(3) To provide load isolation between oscillator plate tank circuit and crystal.
(4) To prevent the tendency to form a square-wave output.

5. If a high degree of coupling exists between the plate and grid circuits of a crystal-controlled oscillator (that is, if the crystal current is high),
   (1) The effective Q of the crystal is improved.
   (2) The damping effect at ultrahigh frequencies is minimized.
   (3) Frequency stability is improved.
   (4) The crystal may crack.

6. Good cleaning agents for crystals are
   (1) Kerosene and varsol.
   (2) Carbon tetrachloride and soap and water.
   (3) Alcohol and gasoline.
   (4) Carbon tetrachloride and kerosene.

7. The approximate range of temperature coefficients to be encountered with X-cut quartz crystals is
   (1) $+10$ to $+25$ cps per mc per °C.
   (2) -10 to -25 cps per mc per °C.
   (3) -5 to -10 cps per mc per °C.
   (4) $+5$ to $+20$ cps per mc per °C.
   (5) 50 to 100 cps per mc per °C.

8. The expression "low temperature coefficient" as applied to quartz crystals when used in oscillators means
   (1) The actual operating frequency will be higher than the normal crystal frequency when temperature increases.
   (2) The actual operating frequency will be lower than the normal crystal frequency when temperature increases.
   (3) The actual operating frequency will differ very little from the normal crystal frequency under conditions of changing temperature.
   (4) The crystal can operate satisfactorily only under low-temperature conditions.

9. The term "negative temperature coefficient" as applied to quartz crystals used in oscillators means
   (1) Frequency decreases with an increase in temperature.
   (2) Frequency increases with an increase in temperature.
   (3) Frequency is not affected by changes in temperature.
   (4) The crystal acts as a negative resistance under certain temperature conditions.

10. The term "positive temperature coefficient" as applied to quartz crystals used in oscillators means
    (1) Frequency decreases with an increase in temperature.
    (2) Frequency increases with an increase in temperature.
    (3) Frequency is not affected by changes in temperature.
    (4) The crystal operates satisfactorily only with an increase in temperature.

11. The crystal in broadcast transmitters is operated at constant temperature
    (1) To permit use of an *AT*-type crystal.
    (2) To improve the crystal Q.
    (3) To improve frequency stability.
    (4) To take advantage of a low temperature coefficient.

12. Compared to tuned circuit oscillators, crystal oscillators
    (1) Offer no particular advantage.
    (2) Permit operation at much higher frequencies.
    (3) Produce a greater power output.
    (4) Exhibit improved frequency stability.

13. If a d-c potential is applied between the two parallel surfaces of a quartz crystal,
    (1) The crystal will always expand.
    (2) The crystal will always contract.
    (3) The crystal may expand or contract and may fracture if the d-c potential is high enough.
    (4) The crystal will vibrate if the applied voltage is sufficiently high.

14. The crystalline substance most widely used in crystal-controlled oscillators is
    (1) Tourmaline. (3) Quartz.
    (2) Rochelle salt. (4) Germanium.

15. When a swinging antenna is connected directly to the output of a simple oscillator,
    (1) It has no effect other than to apply a normal load.
    (2) It improves the stability of the output signal.
    (3) It causes frequency instability because the swinging continually changes the loading on the oscillator.
    (4) It produces a more pure sine wave.

16. A high ratio of capacitance to inductance is employed in the grid tank circuit of some oscillators to
    (1) Increase feedback.
    (2) Improve frequency stability by minimizing changes in the total effective inductance.
    (3) Improve frequency stability by minimizing changes in the total effective capacitance.
    (4) Permit higher output to be taken by the external load.

17. Coupled oscillators operating on adjacent frequencies
    (1) Have a tendency to drift apart in frequency.
    (2) Have a tendency to synchronize in frequency.
    (3) Have a tendency to continue to operate at their own frequency.
    (4) Have a tendency to oscillate at varying frequencies.

18. The electron-coupled oscillator
    (1) Uses either a triode or pentode tube.
    (2) Is unaffected by changes in the external load.
    (3) Has inherent poor frequency stability.
    (4) Is a special form of crystal oscillator.

19. The multivibrator is
    (1) A two-stage *RC*-coupled amplifier with the output of each stage applied to the input of the other.
    (2) An *LC* oscillator that produces a square-wave output.
    (3) A crystal oscillator that produces an output containing many harmonics.
    (4) A form of oscillator used at microwave frequencies.

20. The output of a multivibrator is
    (1) A sine wave.
    (2) A sawtooth waveshape.
    (3) A square wave.
    (4) Either a sine wave or a square wave depending on the values of the *RC*-coupling networks and the operating voltages.

21. A cavity resonator is associated with
    (1) Low frequencies.
    (2) Audio frequencies.
    (3) Intermediate radio frequencies.
    (4) Microwave frequencies.

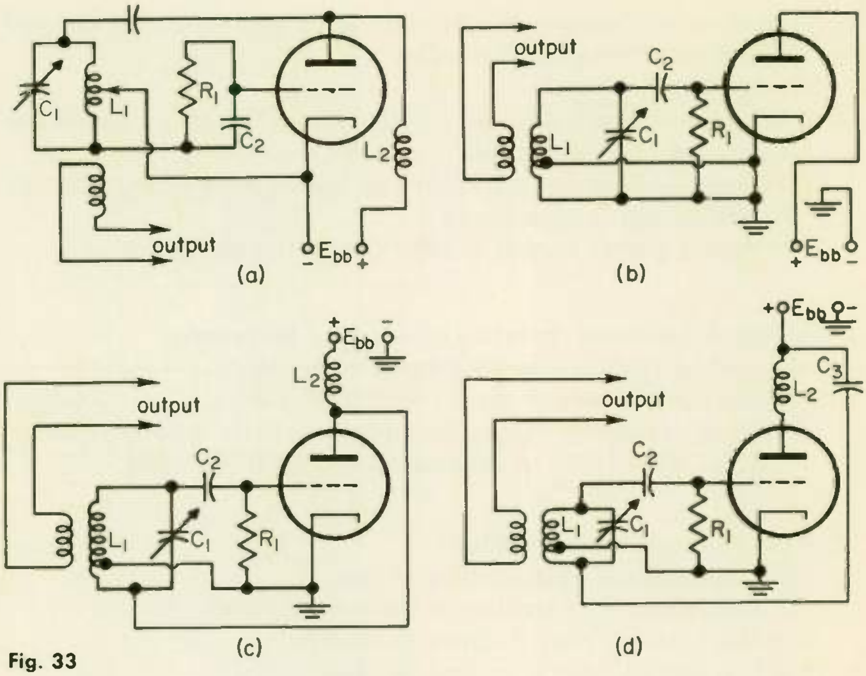

Fig. 33

22. A crystal controlled oscillator has a frequency of 1500 kc when the crystal is at a temperature of 50° C. The frequency changes to 1500.3 kc when the crystal temperature is 45° C.
    (1) The temperature coefficient of the crystal is positive.
    (2) The temperature coefficient is negative.
    (3) The temperature coefficient is erratic.

23. A crystal with a positive temperature coefficient of 11 cycles per megacycle per degree *Centigrade* oscillates at a frequency of 2450 kc when the temperature is 70° F. What will be the frequency of the crystal if the temperature raises to 100° F?
    (1) 2449.192 kc
    (2) 2449.551 kc
    (3) 2450.449 kc
    (4) 2450.808 kc
    (5) 2494.917 kc
    (6) 2899.176 kc
    (7) None of the above.

24. Which circuit of Fig. 33 (if any) shows a Hartley shunt-fed oscillator properly connected?
    (1) (a)
    (2) (b)
    (3) (c)
    (4) (d)
    (5) None are correct.

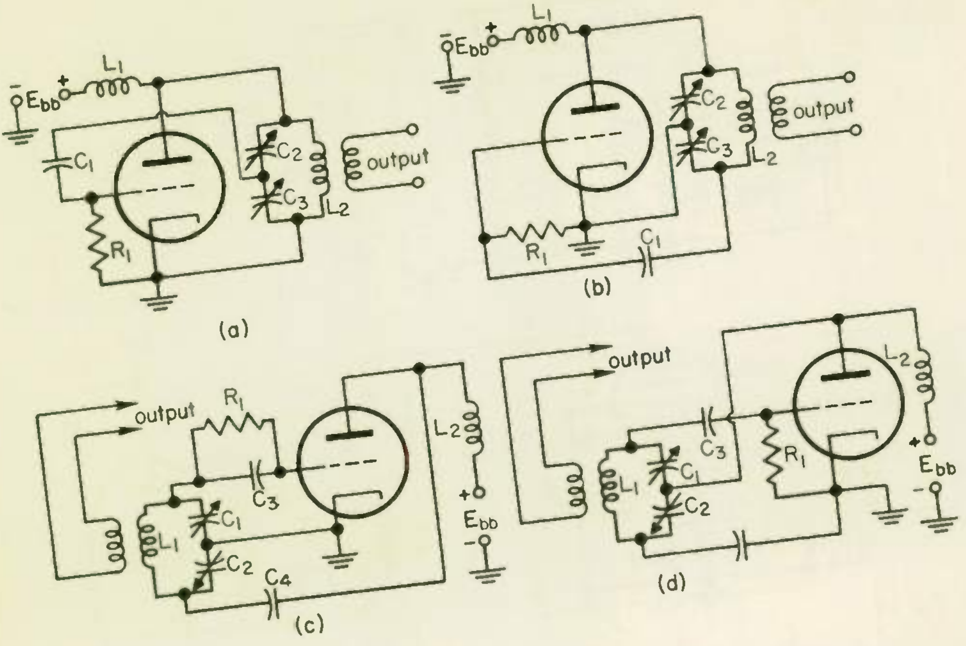

(a) (b) (c) (d)

Fig. 34

25. Which circuit of Fig. 34 (if any) shows a Colpitts oscillator properly connected?
(1) (a) (2) (b) (3) (c) (4) (d)
(5) None are correct

26. If the electron coupled oscillator of Fig. 13 does not oscillate, a logical cause of the trouble might be that
(1) C_4-L_4 is tuned to a frequency different from C_2-L_2-L_3.
(2) R_3 is too low a value.
(3) R_1 is open.
(4) C_2 is not set to the correct value.

27. For an oscillator using a tuned tank circuit and operating class C to be self starting, it is necessary to use
(1) grid-leak bias.
(2) a relatively high plate voltage.
(3) a fairly high *L-C* ratio in the tank circuit.
(4) a remote cutoff tube.

28. Suppose that in Fig. 9 capacitor C_b is replaced with a larger capacitor. How will the frequency of the oscillator be affected?
(1) It will increase.

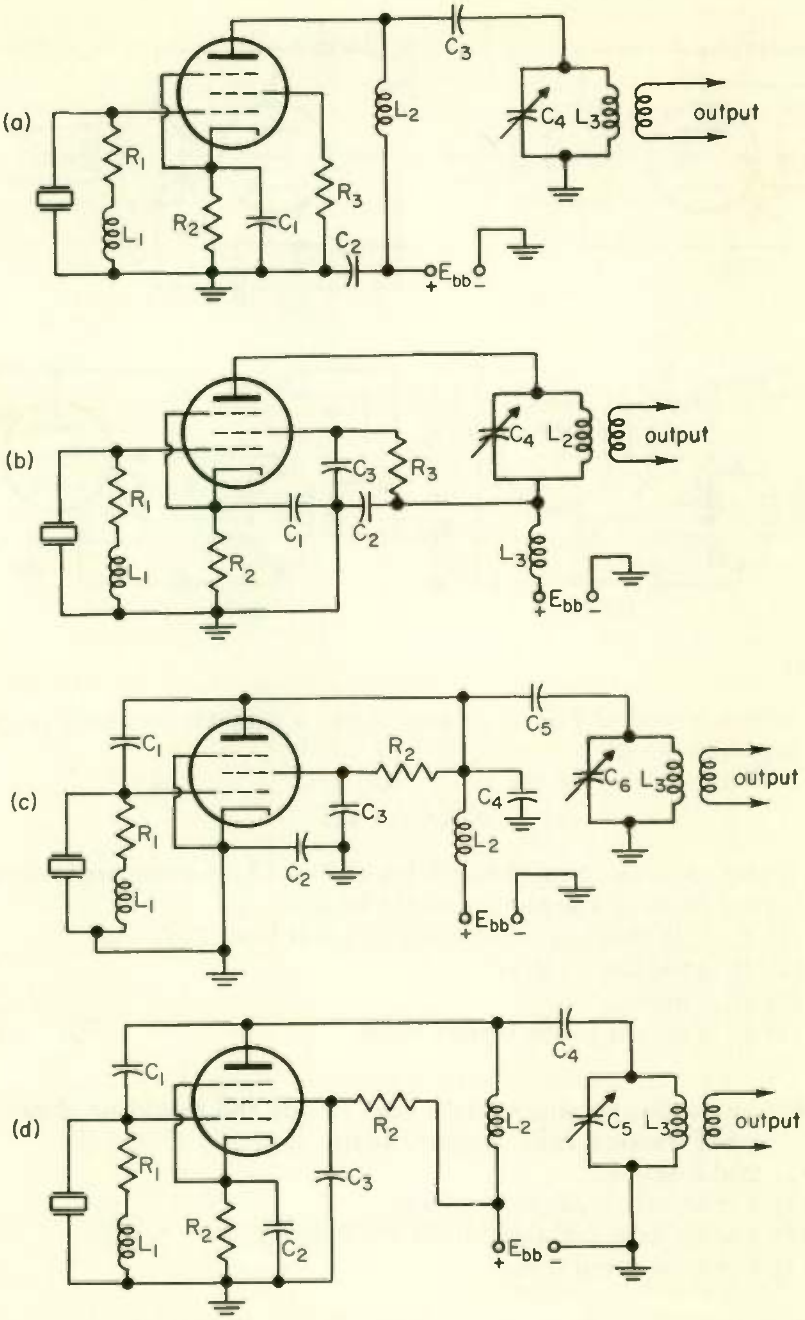
(a)
C3
L2
C4
L3
output
R1
L1
R2
C1
R3
C2
+ Ebb -
(b)
C4
L2
output
C3
R3
R1
C1
C2
L1
R2
L3
+ Ebb -
(c)
C1
C5
R2
C6
L3
output
R1
C3
C4
L2
C2
L1
+ Ebb -
(d)
C1
C4
R2
L2
C5
L3
output
R1
C3
R2
C2
L1
+ Ebb -

Fig. 35

(2) It will decrease.
(3) The frequency will increase when oscillator output is light, but decrease with a heavy output load.
(4) Oscillator frequency will not change.

29. Which circuit of Fig. 35 (if any) shows a pentode tube with *shunt-fed plate* circuit properly connected to form a crystal controlled oscillator.
(1) (a) (2) (b) (3) (c) (4) (d)
(5) None are correct.

30. An oscillator in which the load is isolated from the oscillatory circuit could be
(1) a shunt fed Colpitts oscillator.
(2) a series fed Colpitts oscillator.
(3) an electron coupled oscillator.
(4) an Armstrong oscillator.
(5) a multivibrator.

31. If you build up the circuit of Fig. 7(a) and find that it does not oscillate, you should try
(1) connecting R_1 in parallel with C_2, as in Fig. 7(b).
(2) reversing the leads to L_3.
(3) a smaller value capacitor for C_2.
(4) moving L_3 further from L_1.

32. What size should capacitor C_s be in Fig. 13?
(1) Large enough that its reactance at the oscillator frequency is small.
(2) Of such size that its reactance is approximately equal to the resistance of R_s.
(3) It should be approximately the same size as C_1.
(4) Various values should be tried to find the one that produces the best frequency stability as the output load is varied.

33. Which of the following is equivalent to a resonant circuit of very high Q?
(1) A dynatron oscillator
(2) A quartz crystal
(3) A *VR* tube, when used for voltage regulation
(4) A negative feedback amplifier.

34. To substantially increase the frequency of the oscillator shown in Fig. 8(c) you would

(1) increase the value of C_2.
(2) decrease the value of C_2.
(3) vary the tap position on L_2-L_3.
(4) vary the value of E_{bb}.

End of Exam

Notes

"When plans are laid in advance,
it is surprising how often
circumstances fit in with them."

LETTER SYMBOLS USED IN ELECTRONICS

α	attenuation constant; temperature coefficient
B, b	susceptance
β	wavelength or phase constant
c	velocity of light
δ	damping constant
Δ	increment
e	base of natural logarithms ($e = 2.718\ldots$)
E, e, V, v	voltage
ε	dielectric constant
η	efficiency
f	frequency
f_c	critical or cutoff frequency
f_r	resonant frequency
F_p	power factor
g_m	grid-plate transconductance (mutual conductance)
G, g	conductance
γ	propagation constant
j	$\sqrt{-1}$ (same as i in algebra)
k	coefficient of coupling
ln	logarithm to the base e
log	logarithm to the base 10
L	inductance; self-inductance
M, L_{12}, etc.	mutual inductance

λ	wavelength in free space
μ	amplification factor of electron tube; magnetic permeability
N	number of turns
ω	angular velocity ($\omega = 2\pi f$)
P, p	power
P_i	input power
P_o	output power
ϕ, θ	phase displacement, phase angle
Φ	magnetic flux
Q, q	quantity of electricity or charge
R, r	resistance
$\mathcal{R}$	reluctance
ρ	resistivity or specific resistance
S	elastance ($S = \frac{1}{C}$)
t	time
T	period; temperature
τ	time constant
W	work; energy
X	reactance; self-reactance
X_c	capacitive reactance
X_L	inductive reactance
Y	admittance
Z	impedance; self-impedance
Z_o	characteristic impedance, surge impedance

CLEVELAND INSTITUTE OF ELECTRONICS / CLEVELAND, OHIO

electronics

CLEVELAND INSTITUTE OF ELECTRONICS / CLEVELAND, OHIO

Currents and Voltages in A-C Circuits

2315

An AUTO-PROGRAMMED® Lesson

ABOUT THE AUTHOR

Through over 15 years experience in helping students learn through home study, Mr. Geiger has obtained an intimate understanding of the problems facing home-study students. He has used this knowledge to make many improvements in our teaching methods. Mr. Geiger believes that students learn fastest when they actively participate in the lesson, rather than just reading it.

Mr. Geiger edits much of our new lesson material, polishing up the manuscripts we receive from subject-matter experts so that they are easily readable, contain only training useful to the student in practical work, and are written so as to teach, rather than merely presenting information.

Mr. Geiger's book, *Successful Preparation for FCC License Examinations* (published by Prentice-Hall), was chosen by the American Institute of Graphic Arts as one of the outstanding text books of the year.

This is an AUTO-PROGRAMMED* Lesson exclusive with the Cleveland Institute of Electronics. It is your assurance of the finest in technical education and training.

*Registered Trademark

Accredited by the Accrediting Commission of the National Home Study Council

The Accrediting Commission has been approved by the U.S. Office of Education as a "nationally recognized accrediting agency".

Currents and Voltages in A-C Circuits

By ***DARRELL L. GEIGER***
Senior Project Director
Cleveland Institute of Electronics

2315

In this lesson you will learn . . .

Frontispiece: *Semi-automatic processing of nuclear fuel elements.* Photo: Courtesy, Sylvania-Corning Nuclear Corporation.

FIRST EDITION/First Printing/August, 1967.

2315

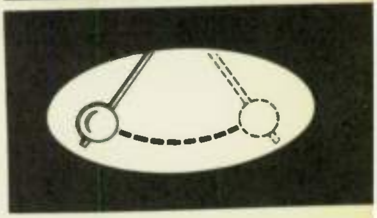

A chat with your instructor

An understanding of voltage, resistance, and current is required to work with d-c circuits, but more things must be understood to work with a-c circuits.

The vast majority of circuits encountered in electronics are a-c circuits. A radio or television set receives an a-c signal from the antenna, amplifies it, and changes it sufficiently to create sound or a picture. Pulse equipment can be considered to be a-c equipment. And virtually all operations in a digital or analog computer involve a-c in one way or another.

In a d-c circuit, the opposition that a component offers to the flow of current—the resistance—remains the same at all times. This is not true in a-c circuits. The opposition offered by an inductor or capacitor, called reactance, varies when frequency varies. And the opposition offered by a circuit containing resistance and reactance, called impedance, also varies with frequency.

In a d-c circuit the current in one parallel branch is always less than the current taken from the battery or other voltage source, and the voltage across a series component is always less than the battery voltage. In an a-c circuit the current in one branch is often many times greater than the voltage source current, and the voltage across a series component is often many times greater than the supply voltage. But in spite of these differences, Ohm's law and Kirchhoff's voltage and current laws describe the voltage and current distribution in a-c circuits as well as they do in d-c circuits. This lesson is devoted primarily to how to apply these fundamental laws of electricity to the understanding of a-c circuits.

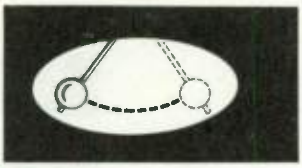

Currents and Voltages in A-C Circuits

PARALLEL A-C CIRCUITS

The supply voltage is the only voltage value in a parallel circuit, whether a-c or d-c. This voltage is applied directly to all the parallel components. There are several currents in a d-c or a-c circuit, one for each component and, in addition, the total current furnished by the voltage source. We can use Ohm's law, first to be discussed, in finding the branch currents, and then use Kirchhoff's current law to find the total circuit current.

1 OHM'S LAW FOR A-C CIRCUITS . . . In an a-c circuit, resistance is not the only factor that restricts the flow of current. Inductive reactance X_L and capacitive reactance X_C also oppose current flow. The total opposition to current flow (that is, the combined effects of resistance, inductive reactance, and capacitive reactance) is called *impedance.* In a d-c circuit the impedance is the same as the resistance, since nothing else in a d-c circuit opposes current flow. The symbol for impedance is Z.

To adapt Ohm's law so that it will work for a-c circuits as well as d-c circuits, we replace the symbol R in the formula with the symbol Z. The three forms of Ohm's law then read

$$E = IZ \qquad I = \frac{E}{Z} \qquad Z = \frac{E}{I}$$

Example . . . In Fig. 1 find (a) the current in part (a) of the figure, (b) the voltage in part (b), and (c) the value of X_C in part (c).

Solution . . . Since each of the circuits has only reactance (no resistance), the impedance Z in each circuit is the same as the reactance.

(a) $I = \frac{E}{Z} = \frac{80\text{ V}}{20\ \Omega} = 4\text{ A}$, *ans.*

(b) $E = IZ = 1.5\text{ A} \times 400\ \Omega = 600\text{ V}$, *ans.*

(c) $X_C = Z = \frac{E}{I} = \frac{6\text{ V}}{0.25\text{ A}} = 24\ \Omega$, *ans.*

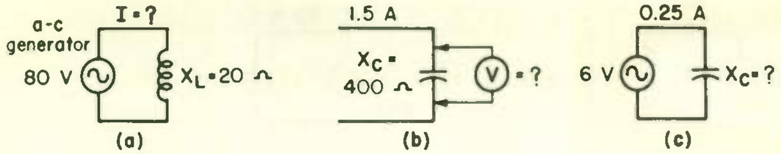

Fig. 1 Unknown values can be found by Ohm's law.

WHAT HAVE YOU LEARNED?

1. In Fig. 1(a) the circuit current *(leads by 90°) (lags by 90°) (is in phase with)* the applied voltage.

2. In Fig. 1(c) the circuit current *(leads by 90°) (lags by 90°) (is in phase with)* the applied voltage.

3. In Fig. 2 the current I_R through resistor R is (a) ______ amperes. The current I_L through L is (b)______ amperes. The current I_C through capacitor C is (c) ______ amperes.

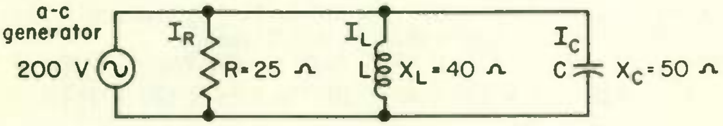

Fig. 2

4. In Fig. 3(a) the impedance Z is (a) ______ ohms. In Fig. 3(b) the generator voltage is (b) ______ volts.

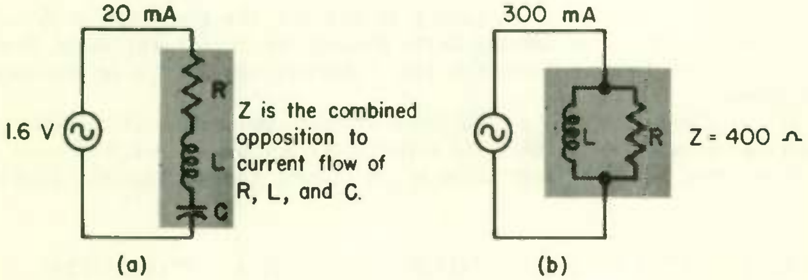

Fig. 3

5. The formula for finding the reactance of an inductor is (a) ______________ . The reactance of L in Fig. 4 is (b) ______ ohms. The current I in Fig. 4 is (c) ______ milliamperes.

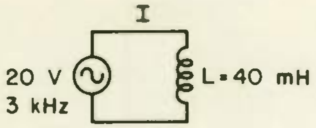

Fig. 4

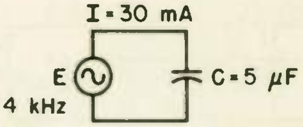

Fig. 5

6. What is the voltage of the a-c generator in Fig. 5?

7. If the frequency in Fig. 4 were to double to 6 kHz (the voltage not changing), the current would then be (a) ______ milliamperes. If the generator voltage in Fig. 5 remained at 239 mV but the frequency were doubled, then the current would change from 30 mA to (b) ______ milliamperes.

ANSWERS

1. Lags by 90° . . . The current through an inductor lags the voltage across the inductor by 90°.

2. Leads by 90° . . . The current through a capacitor leads the voltage across the capacitor by 90°.

3. (a) 8 (b) 5 (c) 4 . . . The 200-V output from the a-c generator is across each one of the three parallel branches. Hence, just apply Ohm's law to each branch to find the current through that branch.

4. (a) 80; (b) 120 5. (a) $X_L = 2\pi fL$ (b) 754 . . . $X_L = 2\pi fL$:

$$X_L = 6.28 \times 3 \times 10^3 \times 40 \times 10^{-3} = 6.28 \times 120 = 754\,\Omega$$

(c) 26.5 . . . $I = \dfrac{E}{Z} = \dfrac{20}{754} = 0.0265\text{ A}$

6. 239 mV . . . First the reactance of C must be found:

$$X_C = \frac{1}{2\pi fC} = \frac{1}{6.28 \times 4 \times 10^3 \times 5 \times 10^{-6}} = \frac{1000}{125.6} = 7.96\,\Omega = Z$$

$$E = I \times Z = 30 \times 10^{-3} \times 7.96 = 239 \times 10^{-3}\text{ V} = 239\text{ mV}$$

7. (a) 13.2 . . . When the frequency is doubled, the reactance of L will double. With twice the impedance in the circuit, the current will be cut down to half its original value. Remember that inductive reactance is proportional to frequency.

(b) 60 . . . The reactance of a capacitor is inversely proportional to frequency. When the frequency is doubled, the capacitive reactance is only half what it originally was. Since the impedance is cut in half, the current will double.

2 MEANING OF CURRENT DIRECTION IN A-C CIRCUITS . . . What does ammeter A_3 in Fig. 6 read? Applying Kirchhoff's current law as we used it in d-c circuits, we could say that A_3 will read $14.1 + 21.2 = 35.3$ mA if currents I_1 and I_2 are flowing in the same direction and that A_3 will read $21.2 - 14.1 = 7.1$ mA if I_1 and I_2 are

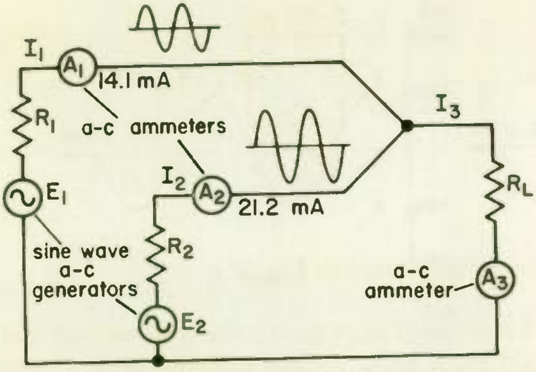

Fig. 6 Kirchhoff's current law applies here, but vectorial addition must be used.

flowing in opposite directions. But what do we mean by the two currents flowing in the same direction or in opposite directions? Aren't both currents continually changing direction, and so flow in both directions? We mean that at every moment of each cycle current I_1 is flowing in the same direction as current I_2 or that at every moment I_1 is flowing in the opposite direction to current I_2. The two currents must always reverse direction of flow at the same time in each cycle to keep the same relative direction with respect to each other.

It is also possible in Fig. 6 for I_1 and I_2 to flow in the same direction for part of a cycle and in opposite directions for the rest of the cycle. In that case, we can't describe the two currents as either flowing in the same or as flowing in opposite directions, except for specified parts of a cycle. Ammeter A_3 then reads somewhere between its maximum possible reading of 35.3 mA when the two currents flow in the same direction and the minimum possible reading of 7.1 mA when the two currents flow in opposite directions. From the limited information in Fig. 6 all we can tell about what A_3 will read is that it will be somewhere between 7.1 mA and 35.3 mA.

Figure 7(a) shows the sine waves for I_1 and I_2 when the two currents are always flowing in the same direction, and Fig. 7(b) when they are always flowing in opposite directions. A positive value for the current indicates one direction, and a negative value the opposite direction. During the time between 0 and 2 μsec (microseconds), both currents in (a) have a positive value, which means they are both flowing in the same direction. At 2 μsec the current reverses. Between 2 and 4 μsec the currents in both branches are negative, which means that I_1 is still flowing in the same direction as I_2 but both I_1 and I_2 are flowing

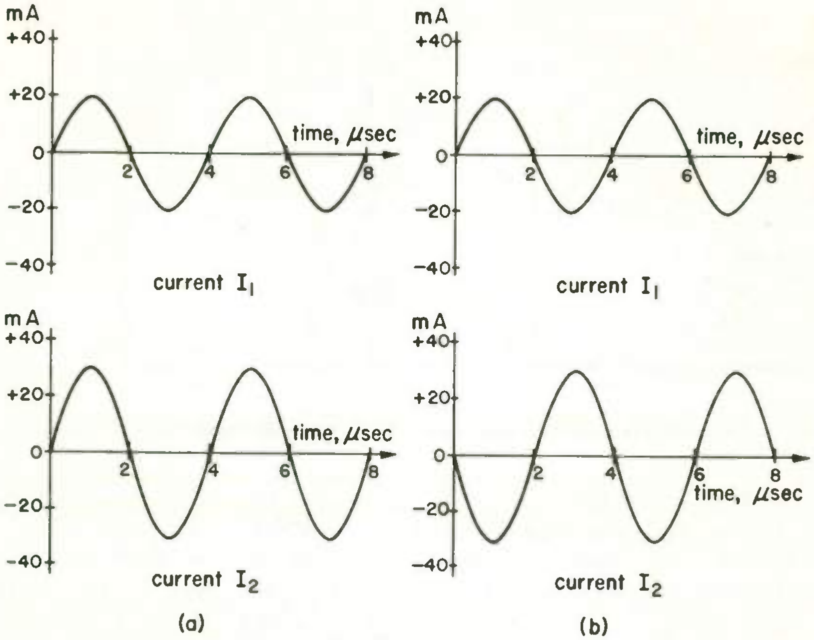

Fig. 7 The currents in (a) flow in the same direction, and in (b) in opposite directions.

in the direction opposite that in which they were flowing at the time between 0 and 2 µsec.

In Fig. 7(a) the two currents are exactly in phase (phase angle 0°), and this is a requirement if the two currents are at every moment to be flowing in the same direction with respect to each other. In Fig. 7(b) the two currents are completely out of phase (180° out of phase), and this is a requirement if the two currents are at every moment to be flowing in opposite directions.

We thus see that two a-c currents in phase correspond to two d-c currents flowing in the same direction and that two a-c currents 180° out of phase correspond to two d-c currents flowing in opposite directions. Thus when currents are exactly in phase or completely out of phase, we can use arrows as in d-c circuits to show the relative current direction, as in Fig. 8. One or both of the circuits shown in Fig. 8 could equally well be drawn with all arrows reversed.

The relative polarities of two or more a-c voltages that are either exactly in phase or completely out of phase can be indicated by plus

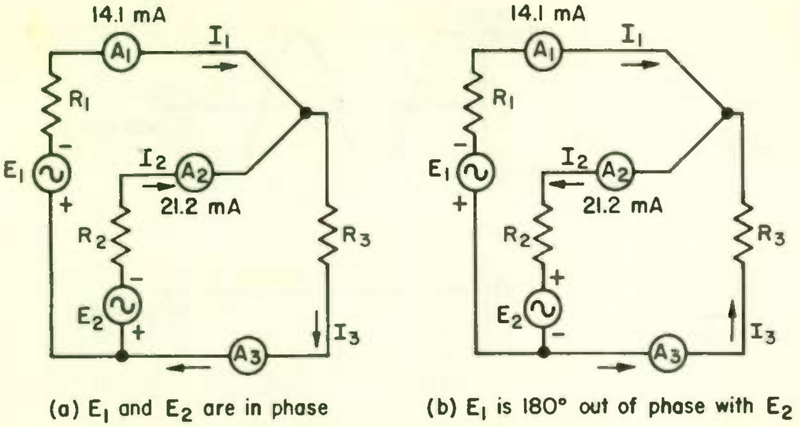

Fig. 8 Relative a-c current directions and relative a-c voltage polarities can be shown as in a d-c circuit when currents and voltages are exactly in phase or exactly out of phase.

and minus signs in the same manner as for a d-c circuit, and this has been done in Fig. 8 for E_1 and E_2. Note that if we were to reverse all the current arrows in one of the diagrams, the voltage polarities shown would also have to be reversed so that the current would flow in the correct direction with respect to the voltage polarity.

During the one half of each cycle when the current direction is the same as the directions in which the arrows point in Fig. 8, we say that the current is positive. During the other half of each cycle, the current direction is opposite the arrows, and we say that the current is negative. Thus in Fig. 7, where the current is shown as having both positive and negative values, positive simply means that the current direction is the same as the arrows on the diagram and negative means that the direction is opposite the arrows. "Positive" and "negative," as the terms apply to current direction, are nothing more than two words for distinguishing one current direction from another. Since over the time of several cycles an a-c current flows in one direction as much as in the other, the terms "positive current direction" and "negative current direction" have no meaning except when referring to the current direction during a specific part of a cycle.

WHAT HAVE YOU LEARNED?

1. Unless we are referring to some specific part of a cycle, the state-

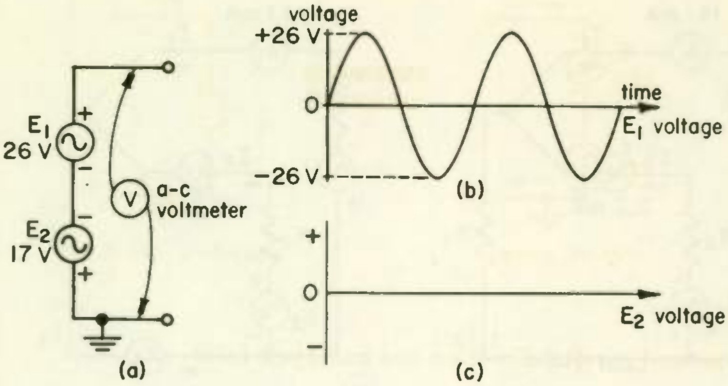

Fig. 9

ment that two a-c currents are flowing in the same direction, or that they are flowing in oppositie directions, has meaning only if the two currents are *(exactly in phase) (180° out of phase) (either exactly in phase or exactly out of phase)*.

2. In Fig. 8(a) ammeter A_3 reads (a) ______ milliamperes and ammeter A_3 in Fig. 8(b) reads (b) ______ milliamperes.

3. How do we know that the current direction through A_3 in Fig. 8(b) is as indicated by the current arrow?

4. In Fig. 8(b) ammeter A_3 will read 35.3 mA if we *(reverse the leads to* A_3*) (reverse the leads to* E_1*) (reverse the leads to both* E_1 *and* E_2*)*.

5. If in Fig. 8(b) both ammeters A_1 and A_2 read 10 mA, then ammeter A_3 will read ______ milliamperes.

6. Figure 9(a) shows two a-c voltages connected in series. Part (b) of the figure shows the waveform of E_1. Draw in part (c) the waveform for E_2 to show the correct phase relationship between the two waves.

7. If in Fig. 9(a) E_1 is 26 V and E_2 is 17 V, the a-c voltmeter will read ______ volts.

8. Draw an equivalent a-c generator to replace E_1 and E_2 in Fig. 9, showing one terminal grounded and also showing terminal polarity. Draw a current arrow showing the direction of current from the equivalent generator if a load were connected.

9. Redraw the original and equivalent circuits in Fig. 10 to show

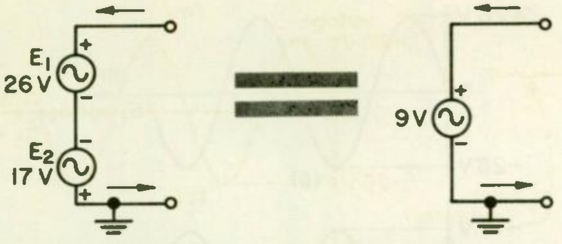

original circuit

equivalent circuit

ig. 10

olarities and current direction one half cycle later.

10. Why do the waves of Fig. 7 show peak values of 20 and 30 mA, espectively, for I_1 and I_2, while ammeters A_1 and A_2 in Fig. 6 read nly 14.1 and 21.2 mA?

ANSWERS

1. Either exactly in phase or exactly out of phase . . . The next topic will take up other phase relationships.
2. (a) 35.3; (b) 7.1 3. Since current I_2 is greater than I_1, the direction of current through A_3 at any moment will be the direction of I_2.
4. Reverse the leads to E_1 . . . That will reverse the phase (shift the phase 180°) so that I_1 and I_2 will now be in phase. The leads to E_2 could be reversed equally well, but not the leads to both E_1 and E_2.
5. Zero . . . Since I_1 and I_2 are out of phase, A_3 reads the difference between the two: 10 A − 10 A = 0 A. Figure 11 shows that you then have a simple series circuit with E_1 and E_2 in series forcing 10 mA around the circuit.

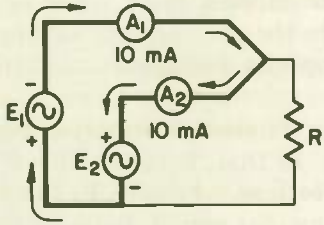

Fig. 11

6. See Fig. 12 . . . The polarities show that the two voltages are 180° out of phase.
7. 9 8. See Fig. 10. 9. See Fig. 13.
10. A-c ammeters read effective current values. These values must be multiplied by 1.414 to get peak values. 1.414 × 14.1 = 20 mA. 1.414 × 21.2 = 30 mA.

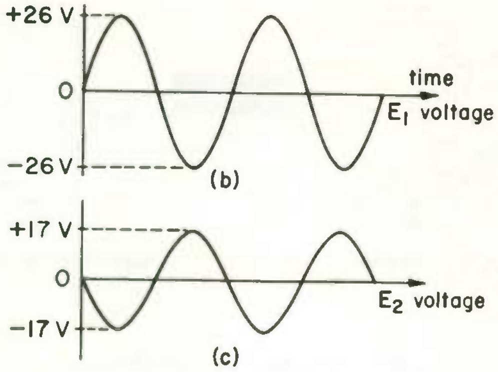

Fig. 12

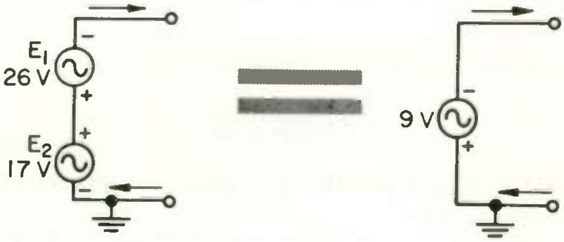

Fig. 13

3 THE SUM OF TWO CURRENTS NOT IN PHASE

. . . When the phase angle between two current waves is neither 0° nor 180°, the two currents will no longer either flow in the same direction at every moment or in opposite directions at every moment. Instead, the two currents will flow in the same direction part of each cycle and in opposite directions part of each cycle. That being the case, we can't summarize and describe the two currents as flowing in the same direction or as flowing in opposite directions.

Waves I_1 and I_2 in Fig. 14 show I_1 and I_2 of Fig. 6 when I_2 is lagging I_1 by 60°. Note in Fig. 14 that, between time 0° and time 60°, I_1 and I_2 flow in opposite directions, as shown by the fact that I_1 is positive and I_2 is negative during that period. Between time 60° and time 180°, both I_1 and I_2 are positive, and therefore the two currents flow in the same direction during this part of the cycle.

If I_2 in Fig. 6 lags I_1 by 60°, what will ammeter A_3 read? We have seen that if the two currents flow in the same direction at every moment, then A_3 will read 35.3 mA, and if the two currents are at every moment in opposite directions, A_3 reads 7.1 mA. Since for a phase

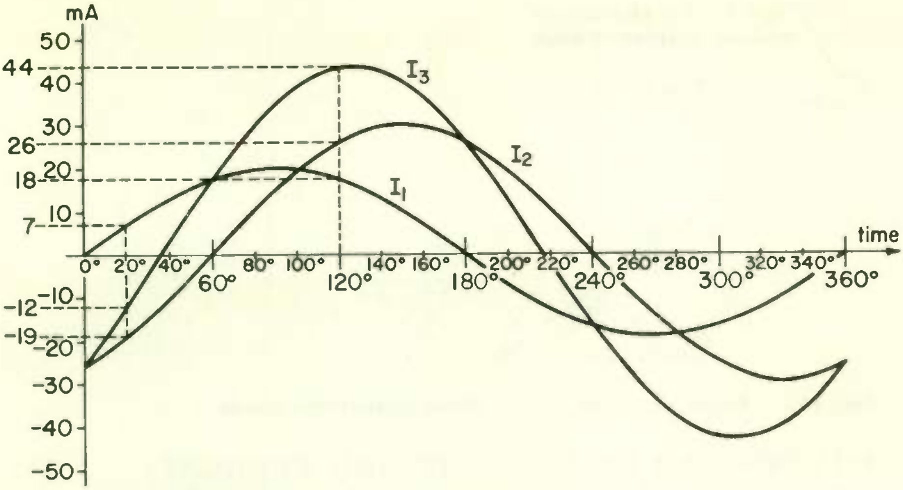

Fig. 14 I_1, and I_2 of Fig. 6 when I_2 is lagging I_1 by 60°.

angle of 60° the two currents flow in the same direction part of the time and in opposite directions the rest of the time, A_3 will evidently read some value between the two extremes of 7.1 and 35.3 mA.

We can find what ammeter A_3 will read at any phase angle by drawing the sine waves for I_1 and I_2 on the same graph accurately to scale and displaced from each other by the proper phase angle and then adding the two waves for each moment of time. A sine curve drawn from the sums obtained will indicate the reading of A_3.

In Fig. 14 sine wave I_3 is the sum of I_1 and I_2 when the phase angle between the two is 60°. To see how I_1 and I_2 are added to get I_3, we will find I_3 at time 120°. The graph shows that I_1 is approximately 18 mA and I_2 is approximately 26 mA at time 120°. Hence, the value of I_3 at 120° is 18 mA + 26 mA = 44 mA. As another example of how I_3 is plotted, at time 20° I_1 is +7 mA and I_2 is −19 mA. Hence, I_3 at this moment is −19 mA + 7 mA = −12 mA.

The sum curve I_3 in Fig. 14 has a peak value of approximately 44 mA. However, since an ammeter reads effective values and not peak values, A_3 in Fig. 14 will read $0.707 \times 44 = 31$ mA, approximately. The current I_3 is not in phase with either I_1 or I_2. Noting in Fig. 14 that I_1 crosses the horizontal time axis at 0° and that I_3 crosses this axis at approximately 36°, we know that I_3 lags I_1 by about 36° and therefore leads I_2 by approximately 60° − 36° = 24°.

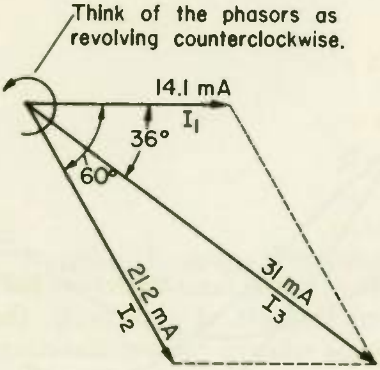

Fig. 15 Finding the vectorial sum of two current sine waves.

4 PHASORS: THE EASY WAY TO ADD CURRENTS . . . The method used in Fig. 14 to add two current sine waves shows you what is meant by the sum of two out-of-phase currents, but it is too laborious to be practical. The easy way is to use phasors.

Figure 15 shows the use of phasors to find what ammeter A_3 will read in Fig. 6 if I_2 lags I_1 by 60°. We draw the phasors carefully to scale and then measure the length of the resultant I_3. Remember always to think of phasors as revolving counterclockwise, and therefore I_2 lags I_1 when drawn as in Fig. 15; that is, I_1 is in the lead as the phasors spin around counterclockwise. Measuring the angle between I_1 and I_3 with a protractor, we find that I_3 lags I_1 by 36°. Also, I_3 leads I_2 by 24°.

5 TOTAL CURRENT IN PARALLEL CIRCUITS . . . Figure 16 is Fig. 2 redrawn, with the current values for I_R, I_C, and I_L (found in Problem 3 of the preceding topic) added. In order to use Kirchhoff's current law, the a-c generator is given polarity markings, and current direction arrows are shown. To draw the current direction arrows correctly, consider E as if it were a d-c voltage source with polarity as shown. Then mark arrows to show the direction in which d-c current would flow through these components. The purposes of the arrows are to provide a reference direction for tracing around the circuit, analyzing the circuit, and applying Kirchhoff's current law.

The reason dashed arrows are used in Fig. 16 is that these arrows do not indicate as much as the solid arrows of Fig. 8. The latter told us the true relative current direction. Dashed arrows pointing in the same direction in Fig. 16 do not mean that the currents associated with the arrows are actually flowing in the same direction. Since, for example,

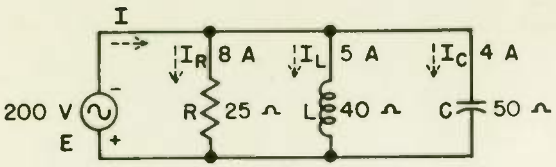

Fig. 16 Components in parallel in an a-c circuit.

the current through R and through L flow in the same direction part of each cycle and in opposite directions the rest of each cycle, the dashed arrows could not possibly indicate relative current direction.

By Kirchhoff's current law, the generator current I in Fig. 16 must equal the sum of the three branch currents. But since the branch currents are not in phase with each other, we must add vectorially to get their sum. The first step in finding the total current I is to draw a phasor diagram, which has been done in Fig. 17(a). Since a parallel circuit has but one voltage, we can use it as a reference vector for establishing the phase relationships of the various currents. The reference vector, E in Fig. 17(a), usually is drawn horizontally, and it can be drawn to any length.

Since the current through a resistance is in phase with the voltage across the resistance, I_R must be in phase with E, and it is so drawn in Fig. 17(a). Also, it is drawn 8 units in length. Next I_C is drawn 4 units in length and leading the applied voltage E by 90° and I_L is drawn 5 units in length and lagging the applied voltage by 90°.

To find the resultant sum I of the three phasors, we note first that I_C and I_L are 180° out of phase, so that the one subtracts from the other, giving a total inductive current I_X of 5 A − 4 A = 1 A. A new phasor diagram, showing I_X and I_R, is now drawn as in Fig. 17(b). The resultant I can be found by measurement or by noting that I is the hypotenuse of a right triangle in which one leg is 8 A and the other leg is 1 A. Hence,

$$I = \sqrt{I_X^2 + I_R^2} = \sqrt{8^2 + 1^2} = \sqrt{65} = 8.06 \text{ A}$$

Measuring the size of angle θ (Greek theta) with a protractor, we find it to be 7.1°. This shows that the current I from the generator lags the generator voltage E by 7.1°.

In using the formula $I = \sqrt{I_X^2 + I_R^2}$, the value to use for I_X is always the difference between I_C and I_L, subtracting the smaller value from

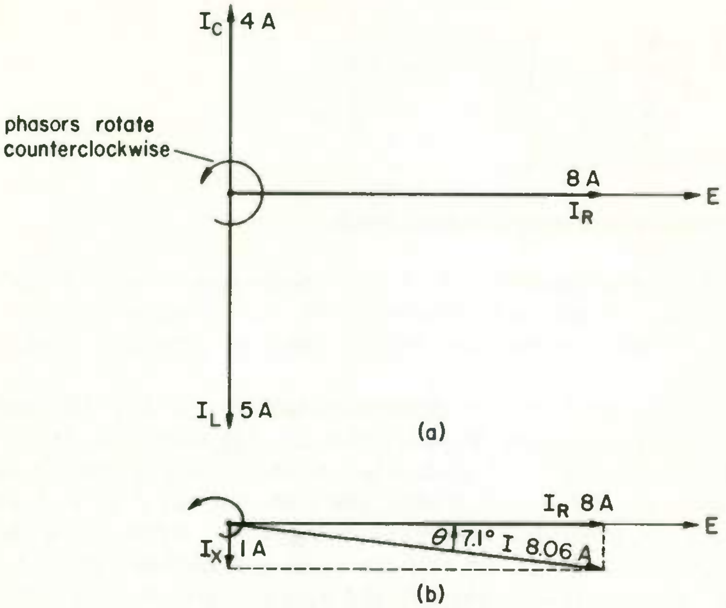

Fig. 17 **Adding a-c currents in parallel circuits.**

the larger. If the circuit does not have both L and C, then I_X is equal to I_C or I_L, whichever is in the circuit. If the circuit has more than one L, C, or R, the currents through parallel components of the same type are added to get a single equivalent current value.

EXAMPLE . . . Find the total current I furnished by the generator in Fig. 18.

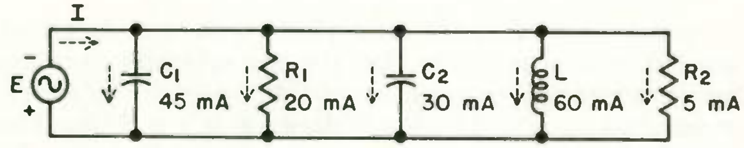

Fig. 18 **Multiple components in parallel in an a-c circuit.**

SOLUTION . . . The total current will be the vectorial sum of the currents through C_1, R_1, C_2, L, and R_2. C_1 and C_2 can be combined into a single equivalent capacitor [C in the equivalent circuit of Fig. 19(a)] that draws 75 mA, and similarly R_1 and R_2 can be combined into R in Fig. 19(a). The value of I_X is 75 mA − 60 mA = 15 mA. Hence,

$$I = \sqrt{I_X^2 + I_R^2} = \sqrt{15^2 + 25^2} = \sqrt{850} = 29.2 \text{ mA}, \textit{ans.}$$

The phasor diagram, Fig. 19(b), shows that the current I leads the applied voltage E by an angle θ, which, if measured by a protractor, turns out to be 31°.

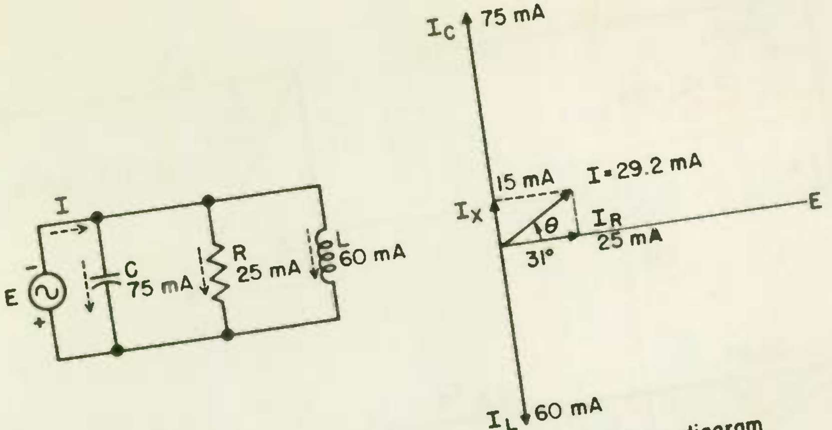

(a) Equivalent circuit

(b) Phasor diagram

Fig. 19 Finding *I* in the circuit of Fig. 18.

WHAT HAVE YOU LEARNED?

1. For each of the circuits in Fig. 20 draw a phasor diagram and find the total current *I*.

2. For each of the circuits in Fig. 20 state whether the angle between the current *I* and the applied voltage *E* is less than 45°, equal to 45°, more than 45° but less than 90°, or equal to 90°.

3. The current *(leads) (lags)* the voltage in all curcuits of Fig. 20.

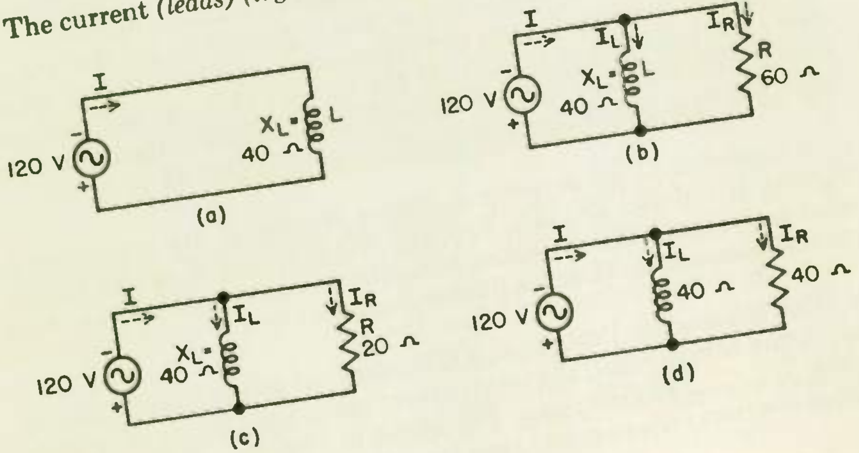

(a)

(b)

(c)

(d)

Fig. 20

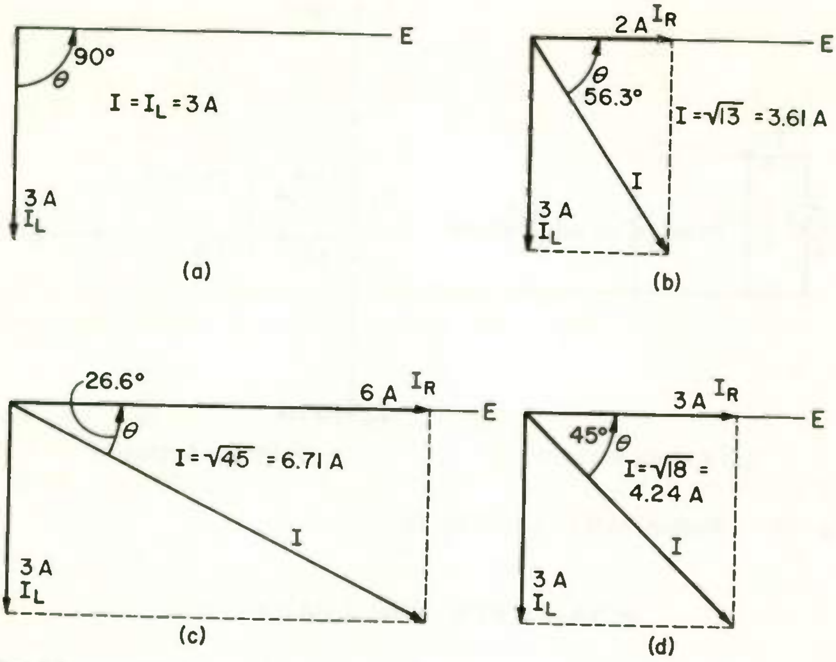

(a) (b) (c) (d)

Fig. 21

4. Study Figs. 20 and 21 to determine how the phase angle between total current and voltage in a parallel circuit is affected by the relative value of current through the reactive and resistive legs of the circuit. When the currents through the reactance and the resistance are equal, the phase angle is (a) ______ degrees. When there is only reactance in the circuit (no resistance), the phase angle is (b) ______ degrees. If the current through the resistance is much greater than the current through the reactance, then the phase angle will be (c) *(much greater than 45°) (much less than 45°)*. If the current through the resistance is much less than the current through the reactance, then the phase angle will be (d) *(much greater than 45°) (much less than 45°)*.

5. A capacitor *C*, an inductor *L*, and a resistor *R* are connected in parallel. If *C* draws 290 mA, *L* draws 300 mA, and *R* draws 10 mA, what is the total current taken from the power supply by the three parallel components? Draw a phasor diagram.

6. With reference to Problem 5, if *C* is taken out of the circuit, leaving only *L* and *R* in parallel, the total current taken from the power supply is now (a) ______ milliamperes. The effect of removing *C* is to (b) *(increase) (decrease)* the current taken from the power supply. If you had

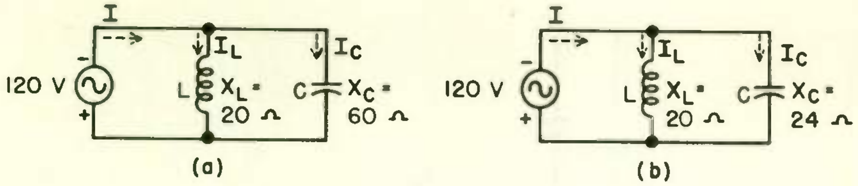

Fig. 22

several resistors connected in parallel across a power supply, the effect of removing one of them would always be to (c) *(increase) (decrease)* the total current.

7. For each circuit of Fig. 22 draw a phasor diagram and find the total current I. In both circuits the current I (a) *(leads) (lags)* the applied voltage by (b) ______ degrees. This is because (c) *(I_L is greater than I_C) (there is a lot of inductance in the circuit).*

8. If a circuit has inductance and capacitance but no resistance (as in Fig. 22), then the phase angle between the voltage and the current I is (a) *(always 90°) (either 0° or 90°) (45° when* X_L *and* X_C *are equal).*

9. If the value of X_L were changed in Fig. 22 so that its reactance was greater than the reactance of X_C, then the current I would *(lead) (lag)* the applied voltage.

10. In Fig. 22(b), I_L is (a) ______ amperes, I_C is (b) ______ amperes, and the total current I is (c) ______ amperes. This shows that when an inductor and a capacitor are connected in parallel, the current through either branch may be many times greater than the total current from the voltage source. This is because the current through L is (d) ______ degrees out of phase from the current through C, so that the total current is the difference between I_C and I_L. During that part of the cycle when the current in Fig. 22(b) is flowing down through L, the current through C is flowing (e) *(up) (down).*

11. Comparing Fig. 22(a) with (b), we note that when X_L and X_C are close to the same value, as in (b), the total current I is much *(greater) (less)* than when X_L and X_C are widely separated in value as in (a).

ANSWERS

1. See Fig. 21. 2. Lags 3. (a) Current lags voltage by 90°; (b) current lags voltage by more than 45°; (c) current lags voltage by less than 45°; (d) current lags voltage by exactly 45°.

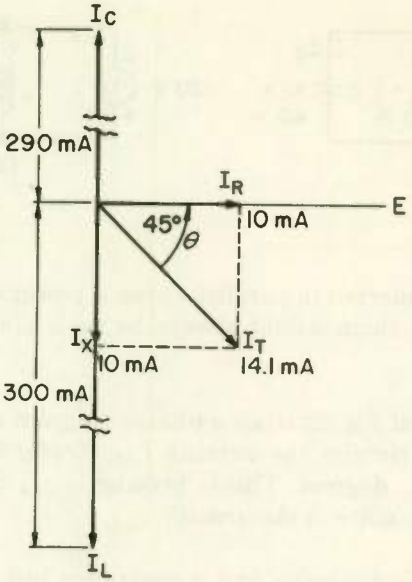

Fig. 23

4. (a) 45° (b) 90° (c) Much less than 45° (d) Much greater than 45° . . . When an inductor (or a capacitor) is connected in parallel with a resistance, the total current is made up of two parts: the part through the resistance, which is in phase with the voltage, and the part through the reactance, which is 90° out of phase from the voltage. The part of the current through the resistance tends to pull the total current in phase with the voltage, and the part through the reactance tends to pull the total current 90° out of phase from the voltage. As a result, the total current will lag the voltage at some angle between 0° and 90°. If the resistance and reactance currents are equal, each will have equal influence over the total current, so that the phase angle will be halfway between 0° and 90°, which is 45°. If the current through the resistance is the larger of the two, the in-phase influence will be greater than the reactive influence, so that the phase angle will be less than 45°. If the current through the reactance is the larger, the 90° phase shift influence predominates, so that the phase angle will be more than 45°.

5. 14.1 mA . . . See Fig. 23 for phasor diagram.

6. (a) 300.2 (b) Increase . . . Notice that removing the capacitor increased the generator current from 14.1 mA to 300.2 mA, an increase of over 21 times!

(c) Decrease . . . More components in parallel provide more paths for current flow and therefore increase the total current in any parallel circuit not containing both L and C. Because L and C currents are 180° out of phase from each other, and therefore partly cancel, the total current is often less than if L or C were removed.

7. See Fig. 24 for phasor diagrams. Total current is 4 A in (a) and 1 A in (b). (a) Lags; (b) 90; (c) I_L is greater than I_C.

8. Always 90°. 9. Lead . . . More current would then flow through C than through L, so that I_C would predominate.

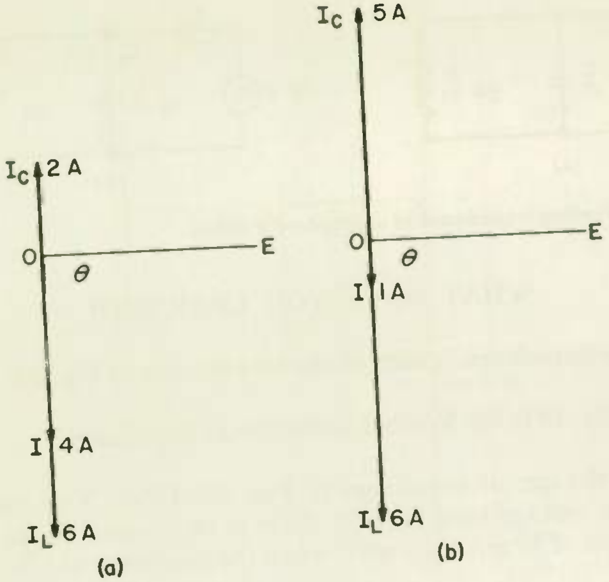

Fig. 24

10. (a) 6 (b) 5 (c) 1 (d) 180 (e) Up . . . 180° out of phase means that the two currents flow in opposite directions at all times.

11. Less . . . When you study parallel resonant circuits, you will make much use of this fact.

6 IMPEDANCE OF A PARALLEL CIRCUIT . . . To find the combined impedance of parallel connected components in an a-c circuit, first find the total current and then use Ohm's law, $Z = E/I$. If the voltage E is not known, assume any convenient value for E. Calculate I for the assumed value of E, and then find Z.

Example 1 . . . Find the impedance in the circuit of Fig. 16.

Solution . . . Figure 17 shows the total current I to be 8.06 A. Hence,

$$Z = \frac{E}{I} = \frac{200}{8.06} = 24.8\,\Omega, \textit{ans.}$$

Example 2 . . . Find the impedance of the CR parallel circuit of Fig. 25(a).

Solution . . . Assume a voltage across the circuit. We will use 72 V, but any other voltage could be used. See Fig. 25(b). I_C and I_R are now found, based upon the assumed voltage of 72 V. Then

$$I = \sqrt{I_C^2 + I_R^2} = \sqrt{4^2 + 3^2} = 5 \text{ A}$$

$$Z = \frac{E}{I} = \frac{72 \text{ V}}{5 \text{ A}} = 14.4\,\Omega, \textit{ans.}$$

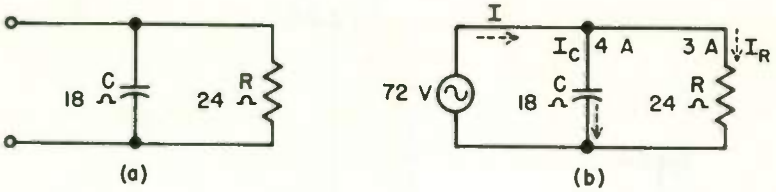

Fig. 25 Finding impedance of a parallel *CR* circuit.

WHAT HAVE YOU LEARNED?

1. Find the impedance in each of the four circuits of Fig. 20.

2. If E in Fig. 19 is 100 V, what is the circuit impedance?

3. What is the circuit impedance in Fig. 26? HINT: You can't assign an arbitrary voltage here because there is only one voltage that will give a current of 30 mA through C when the reactance of C is 7000 Ω.

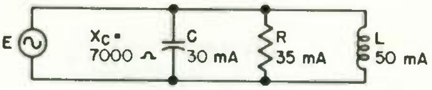

Fig. 26

4. Find the impedance of the circuit of Fig. 27.

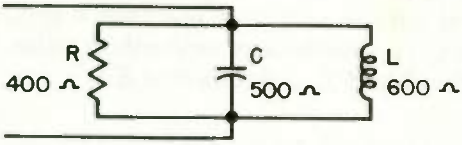

Fig. 27

5. At a frequency of 1000 Hz the current I in Fig. 28 is (a) ______ milliamperes and the circuit impedance is (b) ______ ohms. At a frequency of 1100 Hz the current I is (c) ______ milliamperes and the circuit impedance is (d) ______ ohms.

6. From the findings in Problem 5 we can conclude that when the frequency of the voltage applied to a parallel LC circuit is changed so that X_L becomes more nearly equal to X_C, then the circuit impedance (a) *(increases) (decreases)* and the current drawn from the voltage source (b) *(increases) (decreases)*.

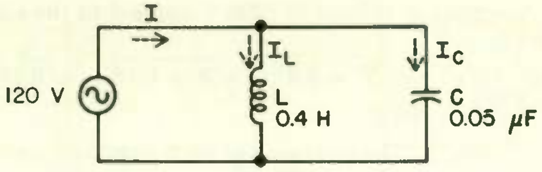

Fig. 28

7. (Review) What is the purpose of R_L in Fig. 29(a)?

8. The *LC* circuit Z_L in Fig. 29(b) takes the place of R_L in Fig. 29(a). In (a) the impedance of R_L is (a) *(different for different signal frequencies) (the same at all signal frequencies)*. In (b) the impedance of Z_L is (b) *(different for different signal frequencies) (the same at all signal frequencies)*.

9. Except at frequencies at which X_L in Fig. 29(b) is approximately equal to X_C, the impedance Z_L is too low for the tube to amplify much. The circuit of 29(b) is called a tuned amplifier because only frequencies at which X_C approximately equals X_L are amplified. The amplifier of Fig. 29(a) is untuned because it amplifies *(all frequencies) (just one frequency)*.

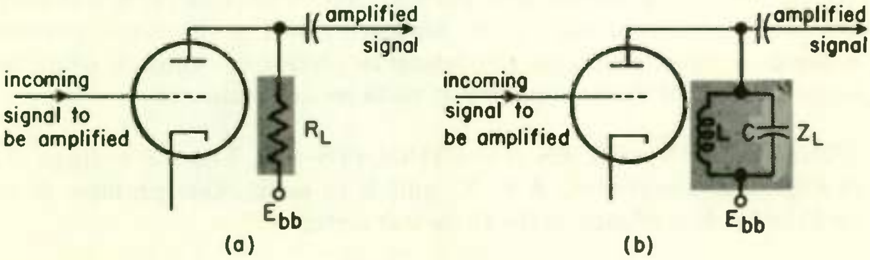

Fig. 29

ANSWERS

1. (a) 40 Ω . . . Since L is the only component in the circuit, the circuit impedance is equal to the reactance of L.
(b) 33.2 Ω . . . You previously found the total current to be 3.61 A. $Z = E/I = 120/3.61 = 33.2\ \Omega$. (c) 17.9 Ω (d) 28.3 Ω
2. 3430 Ω 3. 5210 Ω . . . E is equal to the voltage across C. $E = I_C \times X_C = 0.030 \times 7000 = 210$ V. The reactive current is 50 mA − 30 mA = 20 mA. The total circuit current is

$$I_t = \sqrt{I_R^2 + I_X^2} = \sqrt{35^2 + 20^2} = \sqrt{1225 + 400} = \sqrt{1625} = 40.3\text{ mA}$$

$$Z = \frac{E}{I} = \frac{210}{40.3 \times 10^{-3}} = 5210\ \Omega$$

4. 396 Ω . . . Assuming a voltage of 1200 V applied to the circuit, $I_R = 3$ A, $I_C = 2.4$ A, and $I_L = 2$ A.

$$I_t = \sqrt{I_R^2 + I_X^2} = \sqrt{3^2 + 0.4^2} = \sqrt{9 + 0.16} = \sqrt{9.16} = 3.03 \text{ A}$$

$$Z = \frac{E}{I} = \frac{1200}{3.03} = 396\,\Omega$$

5. (a) 10.1 . . . First find the reactance of each parallel branch and then find the current through each branch. The total circuit current is the difference between the current through the capacitive branch and the current through the inductive branch, since these currents are 180° out of phase.
(b) 11,900 (c) 1.98 (d) 60,600.

6. (a) Increases (b) Decreases . . . The fact that the impedance increases as X_L becomes more nearly equal to X_C will prove very useful in many circuits.

7. R_L is the resistor that blocks the amplified signal from the tube out of the power supply while providing a d-c path from the power supply to the plate.

8. (a) The same at all frequencies . . . A resistor is not frequency-selective.
(b) Different for different frequencies . . . See Problem 5.

9. All frequencies . . . This is because there are no components in the circuit that are frequency-selective.

SERIES A-C CIRCUITS

There is but one current in a series d-c or a-c circuit. We use the voltage as a reference phasor in parallel circuits because there was only one voltage value in the circuit. Similarly, we use the single current value in a series circuit as the reference phasor to which leading or lagging angles of the various circuit voltages are compared.

7 VOLTAGES IN SERIES A-C CIRCUITS . . . The a-c voltage E_3 in Fig. 30(a) supplies 0.2 A to X_L and R in series. Our problem is to find the reading of each of the three voltmeters.

In any series circuit, whether a-c or d-c, the current is the same in all parts of the circuit. By this we mean that in an a-c circuit the current is of the same amplitude in all parts of the circuit and also that the current in any part is in phase with the current in any other part. Since the current in both L and R is 0.2 A, the readings of voltmeters V_1 and V_2 are easily found:

$$E_L = I \times X_L = 0.2\text{ A} \times 300\,\Omega = 60\text{ V} \qquad \text{reading of } V_1$$

$$E_R = I \times R = 0.2\text{ A} \times 400\,\Omega = 80\text{ V} \qquad \text{reading of } V_2$$

By Kirchhoff's voltage law, the applied voltage E_3 must equal the sum of E_1 and E_2. However, vectorial addition must be used to get this

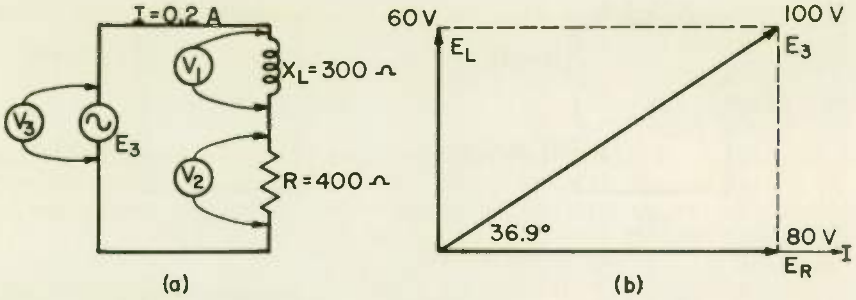

Fig. 30 Finding voltages in an *RL* series circuit.

sum, since E_1 and E_2 are not in phase with each other. The phasor diagram is shown in Fig. 30(b). Since the current is the same in all parts of a series circuit, the current is used as the reference phasor in drawing phasor diagrams for series circuits.

Since the voltage across a resistance is in phase with the current, E_R is drawn in Fig. 30(b) in phase with I. Since the voltage across an inductor leads the current through the inductor by 90°, E_L is drawn to lead I by 90° (remember always that phasors revolve counterclockwise). Resultant phasor E_3 is the sum of phasors E_R and E_L, and it is equal to 100 V. Thus voltmeter V_3 reads 100 V. Figure 30(b) shows that the current I in the circuit lags the applied voltage E_3 by 36.9°.

WHAT HAVE YOU LEARNED?

1. Since the (a) ______________ is the same in all parts of a series circuit, it is used as the reference phasor in analyzing series circuits. Since phasors are considered as revolving (b) ________________, if the reference phasor is drawn horizontally to the right, a voltage leading the current will be drawn (c) *(above) (below)* the reference phasor and a voltage lagging the current will be drawn (d) *(above) (below)* the reference phasor.

2. Find the impedance of the circuit of Fig. 30(a). HINT: Use the formula $Z = E/I$.

3. Find the applied voltage E_t and the circuit impedance for each of the circuits in Fig. 31. Measure the angle of lead or lag between current and applied voltage in each circuit.

4. Find the impedance of the *RL* circuit of Fig. 32. HINT: Assume a current through the circuit (1 A is a good value to use), calculate the applied voltage, and then calculate the impedance.

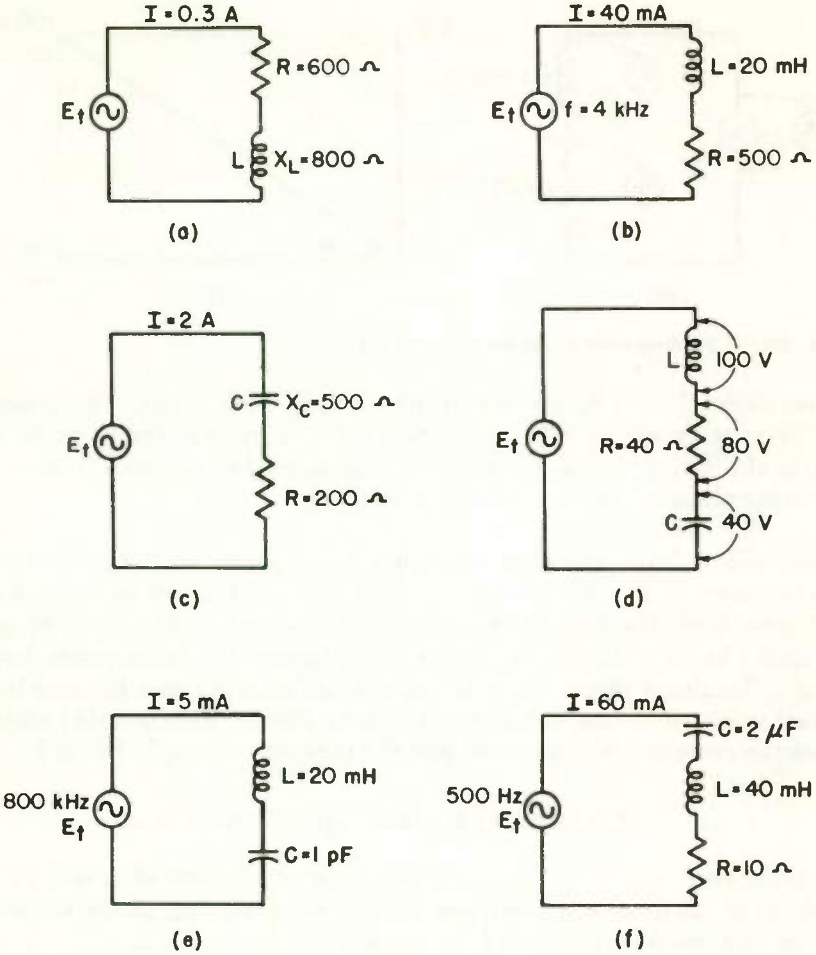

Fig. 31

Fig. 32

5. An a-c operated relay coil has an inductance of 1.26 H and a resistance 60 Ω. The coil must draw a minimum current of 50 mA for reliable contact operation. What is the minimum 60-Hz voltage that can be used for energizing the coil?

ANSWERS

1. (a) Current; (b) counterclockwise; (c) above; (d) below.

2. 500 Ω . . . $Z = \frac{100}{0.2} = 500\ \Omega$

3. (a) 300 V . . . First find the voltage across the individual components:

$$E_R = IR = 0.3 \times 600 = 180\text{ V}$$
$$E_L = IX_L = 0.3 \times 800 = 240\text{ V}$$
$$E_t = \sqrt{E_R^2 + E_L^2} = \sqrt{180^2 + 240^2} = \sqrt{90{,}000} = 300\text{ V}$$
$$Z = \frac{E}{I} = \frac{300\text{ V}}{0.3} = 1000\ \Omega \quad \text{circuit impedance}$$

The applied voltage leads the current by 53.1°.

(b) 28.4 V . . . You must first find the reactance of the inductor before calculating the voltage drops across the individual components. The circuit impedance is 709 Ω. The applied voltage leads the current by 45.2°.

(c) 1078 V; 539 Ω; applied voltage lags the current by 68.2°.

(d) 100 V; 50 Ω . . . First find the current through the circuit:

$$I = \frac{E_R}{R} = \frac{80}{40} = 2\text{ A}$$
$$Z = \frac{E}{I} = \frac{100}{2} = 50\ \Omega, \quad \text{circuit impedance}$$

The applied voltage leads the current by 36.9°.

(e) 492.5 V . . . The applied voltage is equal to the vectorial sum of the voltage across the capacitor and the voltage across the inductor. Since the voltage across the capacitor is 180° out of phase with the voltage across the inductor, the applied voltage is equal to the difference between the voltage across the inductor and the voltage across the capacitor. To compute the voltage across the inductor and capacitor it is first necessary to compute the reactance of the inductor and capacitor.

$$X_L = 2\pi fL = 6.28 \times 800 \times 10^3 \times 20 \times 10^{-3} = 100{,}500\ \Omega$$
$$X_C = \frac{1}{2\pi fC} = \frac{1}{2 \times 3.14 \times 800\text{ kHz} \times 1\text{pF}} = 199{,}000\ \Omega$$
$$E_L = IX_L = 5 \times 10^{-3} \times 100{,}500\ \Omega = 502.5\text{ V}$$
$$E_C = IX_C = 5 \times 10^{-3} \times 199{,}000\ \Omega = 995\text{ V}$$
$$E_t = 995 - 502.5 = 492.5\text{ V}$$

The circuit impedance is 98,500 Ω.

$$Z = \frac{E}{I} = \frac{492.5}{5 \times 10^{-3}} = 98{,}500\ \Omega$$

The applied voltage is 90° out of phase with the current, the reason being that there is no resistance in the circuit.

(f) The applied voltage is 2.07 V.

This was found by first computing the reactance of C and L:

$$X_L = 2\pi fL = 6.28 \times 500 \times 40 \times 10^{-3} = 126\ \Omega$$
$$X_C = \frac{1}{2\pi fC} = \frac{1}{6.28 \times 500 \times 2 \times 10^{-6}} = 159\ \Omega$$

We then compute the voltage drops:

$$E_L = IX_L = 60 \times 10^{-3} \times 126 = 7.56\text{ V}$$
$$E_C = IX_C = 60 \times 10^{-3} \times 159 = 9.54\text{ V}$$
$$E_R = IR = 60 \times 10^{-3} \times 10 = 0.6\text{ V}$$

Performing vectorial addition, we find that the total reactive voltage is 1.98 V. Then the applied voltage is equal to

$$E_A = \sqrt{E_X^2 + E_R^2} = \sqrt{1.98^2 + 0.6^2} = \sqrt{4.28} = 2.07 \text{ V}$$

The applied voltage lags the current by 73.3°.

4. 35 Ω . . . Assuming a circuit current of 1 A, the voltage across R is 28 V and that across L is 21 V. By vectorial addition, the applied voltage is 35 V (see Fig. 33).

$$Z = \frac{E_t}{I} = \frac{35 \text{ V}}{1 \text{ A}} = 35\ \Omega$$

5. 24 V . . . The first step is to find the reactance of the coil:

$$X_L = 2\pi fL = 6.28 \times 60 \times 1.26 = 475\ \Omega$$

Next find the voltage across the inductor and the resistor:

$$E_L = IX_L = 50 \times 10^{-3} \times 475 = 23.8 \text{ V} \quad E_R = IR = 50 \times 10^{-3} \times 60 = 3 \text{ V}$$

Using vectorial addition, we find that the applied voltage is 24 V. The vector diagram is similar to the one in Fig. 33.

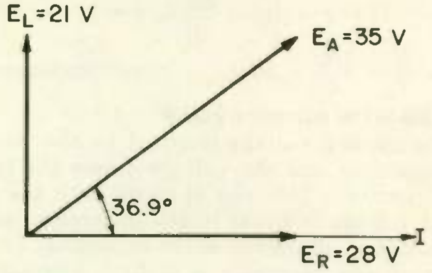

Fig. 33

8 SERIES CIRCUIT IMPEDANCE . . . Notice in Fig. 33 that if we change V to Ω after each of the values on the phasor diagram, the resultant gives us directly the impedance of the series circuit of Fig. 32; see Fig. 34. The value of Z in Fig. 34(b) is simply the hypotenuse of a triangle the legs of which are X_L and R. An impedance triangle for finding the impedance of a series circuit is shown in Fig. 34(c).

An impedance triangle is a convenient way of finding the impedance of a series circuit. However, you must understand that neither an impedance triangle nor an impedance phasor diagram can be used for parallel circuits. If a series circuit has both L and C, the total reactance X, which is the difference between X_L and X_C, should first be obtained. Then the circuit impedance Z is the hypotenuse of a triangle one leg of which is R and the other of which is X.

EXAMPLE 1 . . . Find the impedance of the circuit in Fig. 35(a).

(a) Circuit

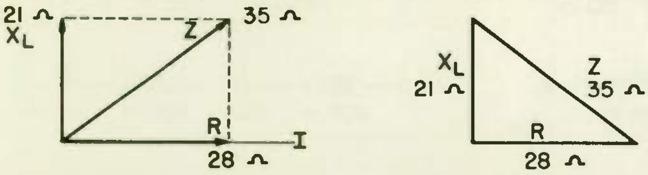

(b) Impedance phasor diagram (c) Impedance triangle

Fig. 34 Finding series circuit impedance with phasor diagram and triangle.

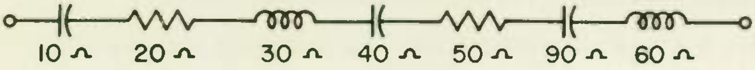

(a) Circuit

$X_C = 10\ \Omega + 40\ \Omega + 90\ \Omega = 140\ \Omega$

$X_L = 30\ \Omega + 60\ \Omega = 90\ \Omega$

$X = 140\ \Omega - 90\ \Omega = 50\ \Omega$

$R = 20\ \Omega + 50\ \Omega = 70\ \Omega$

(b) Calculations

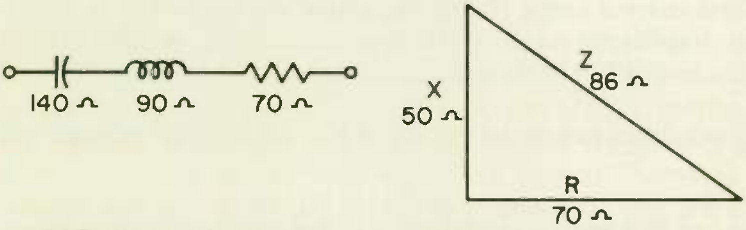

(c) Equivalent circuit (d) Impedance triangle

Fig. 35 Finding the impedance of a *CLR* series circuit.

SOLUTION . . . The calculations for finding X and R are shown in Fig. 35(b). Note the equivalent circuit in (c).

$$Z = \sqrt{X^2 + R^2} = \sqrt{50^2 + 70^2} = \sqrt{7400} = 86\ \Omega,\ ans.$$

When one of the values, R or X, is at least 10 times the other, then Z can be considered as equal to the larger of the two values without serious error.

EXAMPLE 2 . . . A choke coil has a reactance of 5000 Ω, and the resistance of its winding is 200 Ω. What is the impedance of the choke?

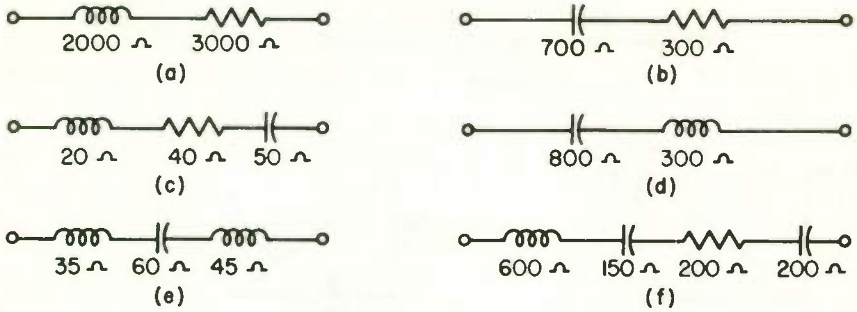

Fig. 36

SOLUTION . . . Since the reactance is over 10 times the resistance, the impedance is approximately 5000 Ω. The exact impedance works out to be

$$Z = \sqrt{X^2 + R^2} = \sqrt{5000^2 + 200^2} = \sqrt{25{,}040{,}000} = 5004\ \Omega$$

WHAT HAVE YOU LEARNED?

1. Find the impedance of each of the circuits in Fig. 36.

2. A 10,000-Ω resistor and a 100-pF capacitor are connected in series. The circuit impedance at 200 Hz is (a) ________ , at 250 kHz is (b) ________ , and at 150 MHz is (c) ________ .

3. If 100 V is applied across the circuit of Fig. 36(f), what current will flow?

4. A motor has 75 Ω resistance and 100 Ω of inductive reactance. When this motor is connected to a 115-V 60-Hz line, the current is ______ amperes. HINT: Consider the resistance and reactance of the motor to be in series.

5. When the frequency of the applied voltage is increased, the reactance of an inductor (a) *(increases) (decreases)* and the reactance of a capacitor (b) *(increases) (decreases)*. That being the case, the impedance of an *RL* series circuit (c) *(increases) (decreases)* with an increase in frequency and the impedance of an *RC* series circuit (d) *(increases) (decreases)* with an increase in frequency. If a circuit contains only resistance, its impedance (e) ____________________ with an increase in frequency.

ANSWERS

1. (a) 3610 Ω . . . $Z = \sqrt{X_L^2 + R^2} = \sqrt{2000^2 + 3000^2} = \sqrt{13{,}000{,}000} = 3610\ \Omega$

(b) 762 Ω . . . $Z = \sqrt{X_C^2 + R^2} = \sqrt{700^2 + 300^2} = \sqrt{580{,}000} = 762\ \Omega$

(c) 50 Ω . . . It is first necessary to subtract X_L from X_C to obtain X. The circuit impedance is then $Z = \sqrt{X^2 + R^2} = \sqrt{30^2 + 40^2} = \sqrt{2500} = 50\ \Omega$.

(d) 500 Ω . . . Since there is no resistance in the circuit, the circuit impedance is equal to the total reactance of the circuit, the reactance being the difference between the reactance of the capacitor and the reactance of the inductor.

(e) 20 Ω . . . Again there is no resistance in the circuit, so the circuit reactance is the circuit impedance. However, the circuit has two inductors and one capacitor. To find the circuit reactance first total the inductive reactances, and then subtract the capactive reactance.

(f) 320 Ω . . . First find the total circuit reactance: 600 − (150 + 200) = 250 Ω. The circuit impedance is then

$$Z = \sqrt{X^2 + R^2} = \sqrt{250^2 + 200^2} = \sqrt{102{,}500} = 320\ \Omega$$

2. (a) $7.96 \times 10^6\ \Omega$ . . . Find the reactance of the 100-pF capacitor at 200 Hz:

$$X_C = \frac{1}{2\pi fC} = \frac{1}{6.28 \times 200 \times 100 \times 10^{-12}} = 7.96 \times 10^6\ \Omega$$

The circuit impedance will be approximately equal to the reactance, since the reactance is more than 10 times greater than the resistance.

(b) 11,900 Ω . . . $X_C = \frac{1}{2\pi fC} = \frac{1}{6.28 \times 250 \times 10^3 \times 100 \times 10^{-12}} = 6370\ \Omega$

$$Z = \sqrt{X_C^2 + R^2} = \sqrt{6370^2 + 10{,}000^2} = \sqrt{1.41 \times 10^8} = 11{,}900\ \Omega$$

(c) 10,000 Ω . . . $X_C = \frac{1}{2\pi fC} = \frac{1}{6.28 \times 150 \times 10^6 \times 100 \times 10^{-12}} = 10.6\ \Omega$.

The impedance of the circuit will be approximately equal to the resistance, since the resistance is more than 10 times greater than the reactance.

3. 313 mA . . . From Problem 1 we know that the circuit impedance is 320 Ω. Therefore the current through the circuit is $I = \frac{E}{Z} = \frac{100}{320} = 313$ mA.

4. 0.92 . . . First find the impedance of the motor:

$$Z = \sqrt{X_L^2 + R^2} = \sqrt{100^2 + 75^2} = \sqrt{15{,}625} = 125\ \Omega$$

The current drawn by the motor is then $I = \frac{E}{Z} = \frac{115}{125} = 0.92$ A.

5. (a) Increases . . . The reactance of an inductor is directly proportional to the frequency.

(b) Decreases . . . The reactance of a capacitor is inversely proportional to the frequency.

(c) Increases (d) Decreases (e) Remains constant . . . This is true only if the circuit contains only resistance. If the circuit contains any type of reactance, the impedance will not remain constant.

9 VOLTAGE DISTRIBUTION IN AN A-C SERIES CIRCUIT . . .

A common problem in electronics is to find the voltage across one of

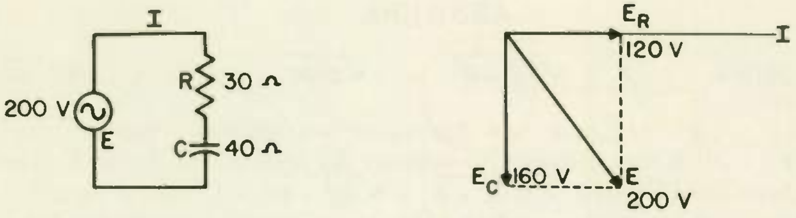

(a) Circuit (b) Check

Fig. 37 An *RC* circuit with voltage distribution check.

the components in a series a-c circuit, say, the voltage across *R* in Fig. 37(a). If the circuit current is found, then the voltage across *R* (or across *C*) can be found by Ohm's law. To find the circuit current, the circuit impedance is first needed. The complete work for finding the voltage across *R* in Fig. 37(a) is as follows:

$$Z = \sqrt{R^2 + X^2} = \sqrt{30^2 + 40^2} = 50\ \Omega$$

$$I = \frac{E}{Z} = \frac{200\ \text{V}}{50\ \Omega} = 4\ \text{A}$$

$$E_R = I \times R = 4\ \text{A} \times 30\ \Omega = 120\ \text{V}, \textit{ans.}$$

If the voltage across *C* is also wanted, it is $E_C = I \times X = 4\ \text{A} \times 40\ \Omega = 160\ \text{V}$. Using Kirchhoff's voltage law as a check, the vectorial sum of the voltages across *R* and *C* must equal the applied voltage. Figure 37(b) shows that the vectorial sum of E_R and E_C equals *E*, or, mathematically,

$$E = \sqrt{E_R^2 + E_C^2} = \sqrt{120^2 + 160^2} = \sqrt{40{,}000} = 200\ \text{V}$$

Example . . . Suppose that a 1000-mV signal is coming from the preceding stage to the grid of V_1 in Fig. 38. Find the amplitude of the signal actually reaching the grid of V_1 if the signal frequency is 50 Hz, and also when the signal frequency is 500 Hz.

Solution . . . The signal voltage applied to the grid of V_1 is the voltage across the grid resistor *R*. At 50 Hz

$$X_C = \frac{1}{2\pi fC} = \frac{1}{6.28 \times 50 \times 0.02 \times 10^{-6}} = 1.59 \times 10^5\ \Omega$$

$$Z = \sqrt{X_C^2 + R^2} = \sqrt{(1.59 \times 10^5)^2 + (2 \times 10^5)^2} = 2.56 \times 10^5\ \Omega$$

$$I = \frac{E}{Z} = \frac{1000\ \text{mV}}{2.56 \times 10^5\ \Omega} = 0.00391\ \text{mA}$$

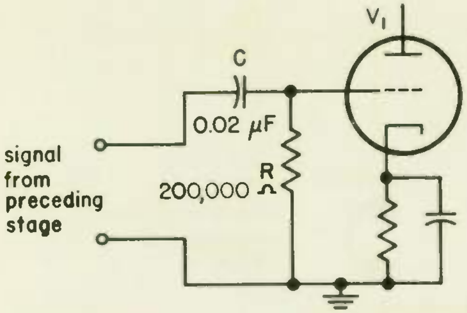

Fig. 38 Capacitor C may cause the loss of some of the signal.

$E_R = I \times R = 782$ mV the voltage applied to the grid of V_1 at a frequency of 50 Hz

At 500 Hz the reactance of X_C is only one-tenth what it is at 50 Hz, or 1.59×10^4 Ω, since the reactance of a capacitor varies inversely with the frequency. At 500 Hz X_C is less than one-tenth of the value of R. Hence, the signal across R at 500 Hz, and therefore the signal applied to the grid, is approximately the same as the incoming signal voltage, which is 1000 mV.

From the example we see that a capacitor with low reactance compared with the circuit resistance can pass a signal with negligible loss but that the signal loss caused by the capacitor can be great when X_C is nearly as large as R. In the example the capacitor at 50 Hz drops the signal from 1000 mV down to 782 mV, a loss of 21.8 per cent, but at 500 Hz and all higher frequencies the capacitor causes negligible signal loss.

WHAT HAVE YOU LEARNED?

1. If the reactance of capacitor C in Fig. 39 does not exceed (a) ______ Ω, the signal loss caused by the capacitor will be negligible. A large capacitor C is needed if it is desired to hear (b) *(very low) (very high)* frequencies in the headphones without signal loss. You would not want to use too large a capacitor for C because (c) *(high frequencies would be partly lost) (it would be unnecessarily bulky and expensive).*

2. In working a-c circuit problems *(you can't use Kirchhoff's laws) (with Kirchhoff's laws you must add vectorially).*

3. A capacitor with a reactance of 50 Ω and an inductor with a react-

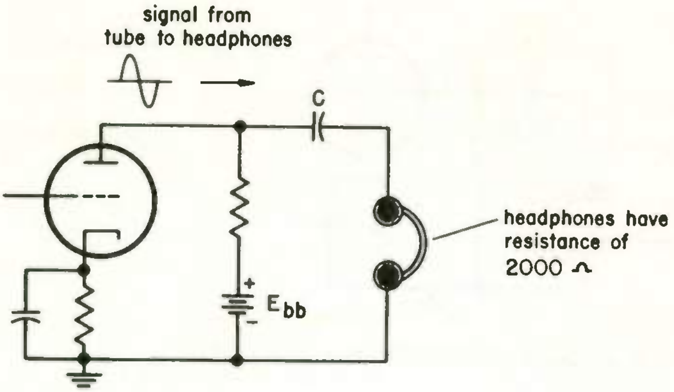

Fig. 39

ance of 48 Ω are connected in series across a 100-V source. The voltage across the capacitor is (a) ______ volts, and the voltage across the inductor is (b) ______ volts. This shows that the voltage across a component in an a-c series circuit (c) *(is always less than the applied voltage) (may sometimes be many times greater than the applied voltage)*. The voltage across a component in a d-c series circuit (d) *(is always less than the applied voltage) (is sometimes greater than the applied voltage).*

4. Find the current through the circuit of Fig. 40 and the voltage across the resistor, inductor, and capacitor.

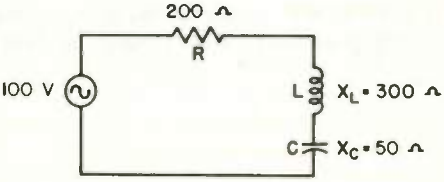

Fig. 40

5. What is the voltage across *R* in Fig. 41(a)?

6. What is the voltage across *C* in Fig. 41(b)?

ANSWERS

1. (a) 200 . . . As long as the reactance of the capacitor is one-tenth or less of the resistance of the headphones the signal loss will be negligible.
(b) Very low . . . A large capacitor is needed for low frequencies because the reactance of a large capacitor will be less at low frequencies than that of a smaller capacitor.
(c) Unnecessarily bulky and expensive.

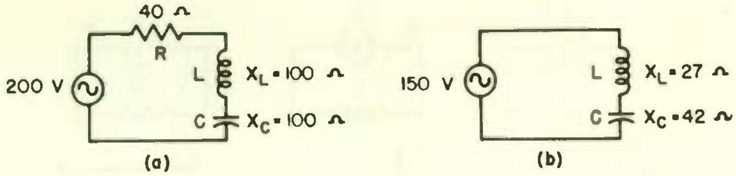

Fig. 41

2. With Kirchhoff's laws you must add vectorially.
3. (a) 2500 . . . The circuit impedance is first found:

$$X = X_C - X_L = 50 - 48 = 2\,\Omega$$

The circuit impedance is equal to the circuit reactance, since there is no resistance in the circuit. The circuit current is $I = \frac{E}{Z} = \frac{100}{2} = 50$ A. The voltage across the capacitor is $E_C = IX_C = 50 \times 50 = 2500$ V
(b) 2400 . . . $E_L = IX_L = 50 \times 48 = 2400$ V
(c) May sometimes be many times greater than the applied voltage
(d) Is always less than the applied voltage
4. 312 mA . . . The first step is to find the circuit impedance.

$$X_t = X_L - X_C = 300 - 50 = 250\,\Omega$$
$$Z = \sqrt{X_T^2 + R^2} = \sqrt{250^2 + 200^2} \quad \sqrt{102{,}500} = 320.2\,\Omega$$
$$I = \frac{E}{Z} = \frac{100}{320.2} = 312.3\text{ mA}$$

The voltage across the resistor is 62.4 V; the voltage across the inductor is 93.6 V; and the voltage across the capacitor is 15.6 V. These voltages are obtained in the following manner:

$$E_R = IR = 312.3 \times 10^{-3} \times 200 = 62.5\text{ V}$$
$$E_L = IX_L = 312.3 \times 10^{-3} \times 300 = 93.7\text{ V}$$
$$E_C = IX_C = 312.3 \times 10^{-3} \times 50 = 15.6\text{ V}$$

5. 200 V . . . The impedance of this circuit is 40 Ω, because the reactance of the inductor cancels the reactance of the capacitor: $X_t = X_L - X_C = 100 - 100 = 0$. Since the reactance of the circuit is zero, the impedance of the circuit is equal to the resistance of the resistor. Therefore, the current through the circuit is

$$I = \frac{E}{R} = \frac{200}{40} = 5\text{ A}$$

The voltage across R is then $E_R = IR = 5 \times 40 = 200$ V.
6. 420 V . . . Since there is no resistance in the circuit, the impedance is equal to the total reactance in the circuit: $X_t = X_C - X_L = 42 - 27 = 15\,\Omega$. The circuit current is

$$I = \frac{E}{Z} = \frac{150}{15} = 10\text{ A}$$

The voltage across the capacitor is $E_C = IX_C = 10 \times 42 = 420$ V.

10 PHASE SHIFT IN *RL* AND *RC* CIRCUITS

. . . Diagram (a) of Fig. 42 reviews the fact that, when a voltage source is connected across

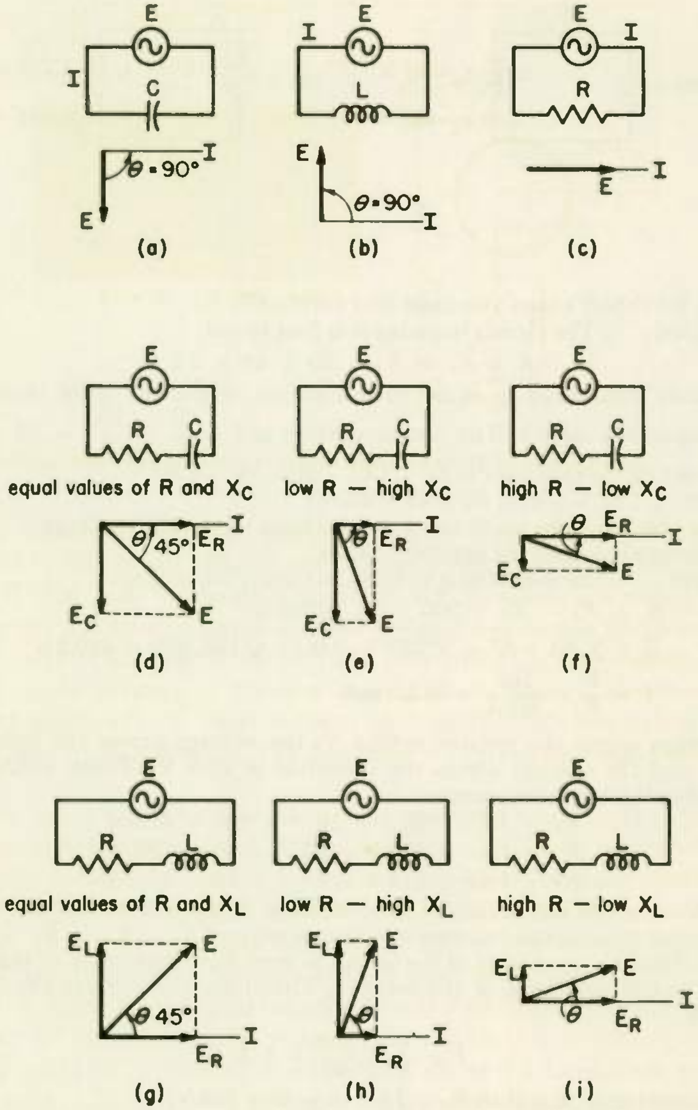

Fig. 42 How relative values of *X* and *R* affect phase shift.

a capacitor, the applied voltage lags the circuit current by 90°. Part (b) of the figure shows that for an inductor the voltage leads the current by 90°, and in (c) we see that the applied voltage across a resistor is in phase with the current.

When a circuit has both resistance and reactance, the resistance tries

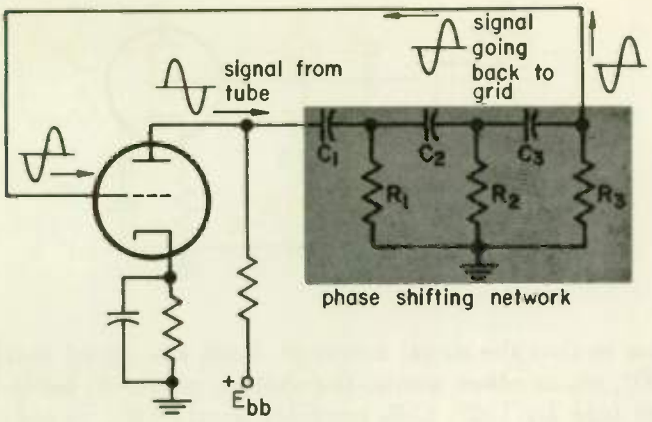

Fig. 43 **Use of phase-shifting *RC* networks in a phase-shift audio oscillator.**

to keep the current and voltage in phase and the reactance tries to shift the voltage 90° with respect to the current. The result of this tug-of-war action is a phase shift somewhere between 0° and 90°. If *R* and *X* are of equal value, the applied voltage leads or lags the current by 45°, as shown in Fig. 42(d) and (g). When *X* is greater than *R*, the angle between applied voltage and current is greater than 45°, as shown in (e) and (h). When *R* is greater than *X*, the angle between applied voltage and current is less than 45°, as shown in (f) and (i).

Looking at the phasor diagrams in Fig. 42, we can make other observations about the phase relationships in the circuit. Remembering as always that phasors revolve counterclockwise, (d) shows that the voltage across *R* leads the applied voltage *E* by 45° in the *RC* circuit shown and the voltage across *C* lags the applied voltage by 45°. *RL* and *RC* circuits are often used for the specific purpose of shifting the phase of a signal. Although the maximum phase shift possible from a *RL* or *RC* network is less than 90°, a larger phase shift can be obtained by using additional *RL* or *RC* networks in tandem. The three *RC*'s in Fig. 43 shift the phase of the signal from the tube by 180°. As a result, the signal going back to the grid from the output of the phase-shifting network is completely out of phase with the signal from the plate of the tube. The tube will not oscillate (generate an a-c signal) without this 180° phase shift.

The signal from the plate of the tube in Fig. 43 passes first through C_1R_1 in series. The relative values of C_1 and R_1 are so chosen that the signal voltage across R_1 leads the signal voltage from the tube by 60°. This voltage across R_1 is applied to C_2R_2 in series. C_2R_2 in turn shifts

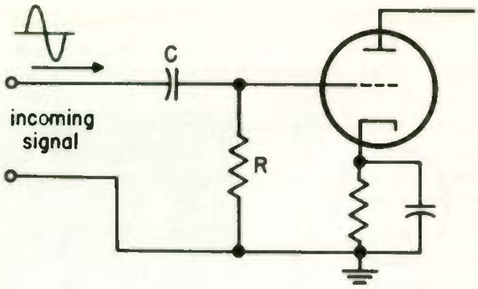

Fig. 44

the phase so that the signal across R_2 leads the signal voltage across R_1 by 60°, or, in other words, the voltage across R_2 leads the signal from the tube by 120°. C_3R_3 provides another 60° phase shift for a total shift of 180°.

WHAT HAVE YOU LEARNED?

1. The signal voltage applied to the grid in Fig. 44 is the signal voltage across *R*. The *CR* network can cause the incoming signal to shift so that the signal reaching the grid is not completely in phase with the incoming signal. In some cases this phase shift will cause distortion. The amount of phase shift will be negligible if *(*X_C *is much greater than* R*)* *(*R *is much greater than* X_C*)*.

2. Figure 42(h) shows that, in an *RL* circuit in which X_L is greater than *R*, the voltage across *R* (a) *(leads) (lags)* the applied voltage by (b) *(less than 45°) (more than 45°)*. The voltage across *L* (c) *(leads) (lags)* the applied voltage by (d) *(less than 45°) (more than 45°)*.

3. As you decrease the frequency of the incoming signal in Fig. 44, will the phase shift of the signal on the grid increase or decrease?

4. Circuit C_1R_1 in Fig. 43 will provide a 60° phase shift at (a) *(just one frequency) (any frequency)*. For the oscillator to work, the total phase shift must be exactly 180°. The oscillator can work (b) *(at just one frequency) (any frequency)*.

5. An *RL* circuit shifts the phase ______ degrees when X_L equals X_R.

ANSWERS

1. *R* is much greater than X_C . . . See Fig. 42(f).

2. (a) Lags . . . Remember that phasors revolve counterclockwise.
(b) More than 45°; (c) leads; (d) less than 45°.
3. Increase . . . The phase shift increases because, as the frequency is decreased, the reactance of the capacitor goes up. Remember that the reactance of a capacitor is inversely proportional to the frequency.
4. (a) Just one frequency . . . At any other frequency the reactance of the capacitor will be different. If the reactance of the capacitor is different, the phase shift will be different.
(b) At just one frequency . . . Only at one frequency will C_1R_1, C_2R_2, C_3R_3 provide a phase shift of exactly 180°.
5. 45 . . . See Fig. 42(g).

POWER FACTOR, POWER, AND *Q*

The *power factor* is a measure of the amount by which the current lags or leads the voltage in an a-c circuit. When the current is in phase with the voltage, which is the case in a purely resistive circuit, the power factor is said to be 1. This is the maximum value the power factor can have.

The minimum value the power factor can have is 0. It has this value when the current leads or lags the voltage by 90°. For angles of lead or lag somewhere between 0° and 90°, the power factor has a value somewhere between 1 and 0. The greater the angle between current and voltage, the lower the power factor.

11 DEFINITION OF POWER FACTOR . . . In a discussion of power factor you will usually encounter the word "cosine." This term comes from trigonometry, and it is used with reference to angles. The cosine of an angle of a right triangle is defined as the ratio of the length of the adjacent side to the length of the hypotenuse. In Fig. 45 the cosine of angle θ (theta), abbreviated cos θ, is equal to side b divided by side c.

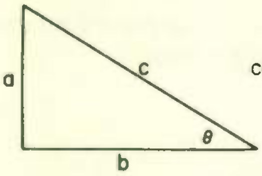

$$\cos\theta = \frac{\text{adjacent side}}{\text{hypotenuse}} = \frac{b}{c}$$

Fig. 45 The cosine of an angle of a right triangle is the ratio of the length of the adjacent side to the length of the hypotenuse.

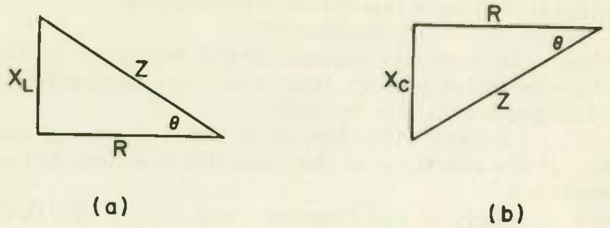

Fig. 46 In either triangle $\cos \theta = \frac{\text{adjacent side}}{\text{hypotenuse}} = \frac{R}{Z}$.

When the angle θ is the angle of lead or lag between current and voltage, $\cos \theta$ is called the circuit power factor. In Fig. 46(a) and (b) the cosine of θ is equal to the resistance R divided by the impedance Z. Hence, we have

$$\cos \theta = \text{power factor} = \frac{R}{Z}$$

The power factor in any series circuit is equal to the circuit resistance divided by the total circuit impedance.

Example . . . In a series RC circuit, $R = 80\ \Omega$, $Z = 100\ \Omega$, and $X_C = 60\ \Omega$. Find the power factor.

Solution . . . $\text{pf} = \frac{R}{Z} = \frac{80}{100} = 0.8$, *ans.*

Note that there is no unit for pf. It is merely a ratio.

Power factor may be further identified as either leading or lagging, depending upon whether the current leads or lags the voltage. This is just an abbreviated method of stating whether a circuit is composed of R and L or R and C. The pf in the example, for instance, may be identified as 0.8 leading, since current in an RC circuit leads the applied voltage. The reverse is true in an RL circuit.

The pf may also be expressed as a per cent. Thus, in the preceding example the power factor of 0.8 may be expressed 80 per cent.

WHAT HAVE YOU LEARNED?

1. If a motor has 44 Ω of resistance and 55 Ω of impedance, the pf is ______ .

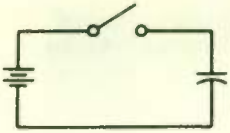

Fig. 47 A d-c capacitance circuit.

2. Power factor can be used to indicate the relative amount of reactance in a circuit when the exact amounts of R, X, and Z are not known. For example, if the pf of a circuit is 0.9 lagging, we know that the ratio of resistance to (a) ______________ is (b)________ and that the reactance is (c) *(inductive) (capacitive).*

3. If a circuit has a pf of 0.7 and $Z = 300\ \Omega$, $R =$ (a) __________ and $X =$ (b) __________ .

4. Find the power factor in a series circuit that has a resistance of 30 Ω, and a reactance of 40 Ω.

ANSWERS

1. (a) 0.8 2. (a) Impedance; (b) 0.9; (c) inductive

3. (a) $R = 210\ \Omega$ . . . $\text{pf} = \frac{R}{Z}$, so $R = \text{pf} \times Z = 0.7 \times 300 = 210\ \Omega$

(b) $X = 214.2\ \Omega$ . . . $X = \sqrt{Z^2 - R^2}$

4. 0.6 . . . First find $Z = 50\ \Omega$

12 TWO KINDS OF POWER . . . Consider a d-c circuit containing capacitance only such as the one shown in Fig. 47. If the switch is closed, the capacitor will charge to the value of the voltage applied. If the switch is then opened, the capacitor will retain the charge indefinitely. Suppose that, while the switch is still open, we replace the charged battery with one that is discharged. Now if we close the switch, the capacitor will discharge and thereby charge the battery. A similar arrangement and the associated waveforms are shown in Fig. 48. Instead of a switch, we have an alternating voltage. As the voltage goes positive in one direction, the capacitor will charge. As the voltage decreases, the capacitor charge will also decrease and return the charge to the source.

When the signs of the voltage and current are the same, that is, either both positive or both negative, the capacitor draws power from the source. However, when the signs are different, the capacitor returns power to the source. Note that the amount of power returned to the source equals the power drawn from the source. Therefore, although

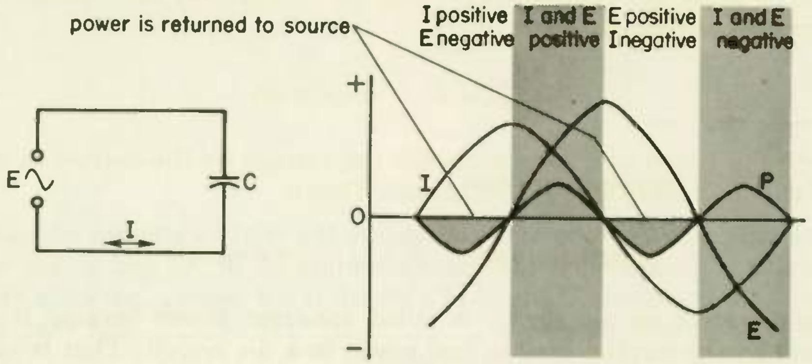

Fig. 48 A simple capacitor circuit and its waveforms.

current flows through a capacitor, no power is consumed. We would come to a similar conclusion if we considered a purely inductive circuit.

Next consider an *RC* circuit across an alternating voltage. Again the capacitance returns the power that it receives. The difference is that the resistor dissipates power. Note that in Fig. 49 the signs of the voltage and current are the same (either both positive or both negative) for most of the cycle. This indicates that the circuit draws more power from the source than it returns. The difference between the power drawn and the power returned is the power dissipated or consumed by the circuit.

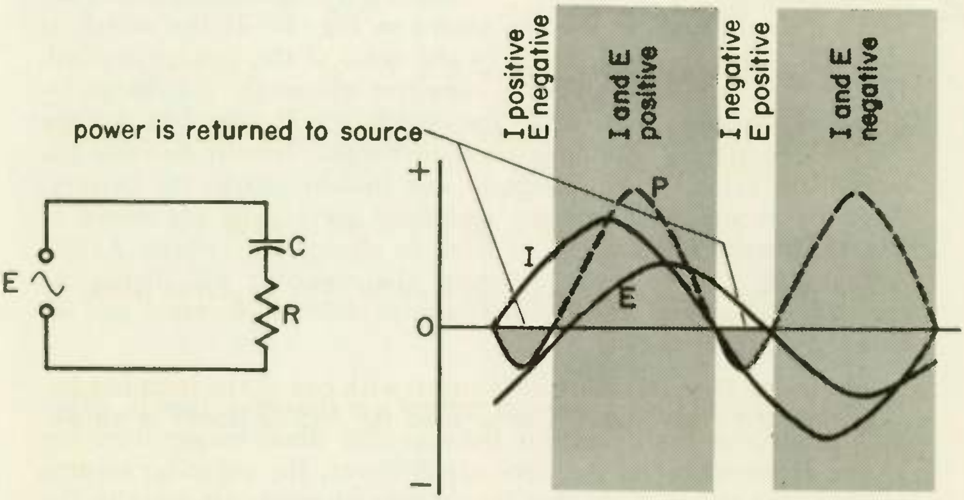

Fig. 49 RC circuit showing apparent and real power.

You have learned that power is found by multiplying the voltage by the current. That is,

$$P = E \times I \qquad \text{d-c circuit}$$

The value found when one multiplies the voltage by the current in an a-c circuit is called the *apparent power*. That is,

$$\text{apparent power} = E \times I \qquad \text{a-c circuit}$$

The power in an a-c circuit is called apparent power because it is found by the method used to find power in a d-c circuit. That is apt to delude the novice into believing that by using this formula he can find the true power in an a-c circuit.

To see how wrong this idea can be, refer to Fig. 48 again. If E is 50 V and I is 5 A, the apparent power is $5 \times 50 = 250$ VA (volt-amperes). But you already know that the actual power used in this circuit is 0 W. Although true power is dissipated in the circuit shown in Fig. 49, it is less than the apparent power. The power used by any circuit can never be greater than the apparent power, and it will be less than the apparent power if the current is not exactly in phase with the voltage. Apparent power is not actual power any more than fool's gold is gold. The word "power," when used alone, always refers to true power.

One way to find the power in an a-c circuit is to multiply the apparent power by circuit power factor:

$$P = \text{apparent power} \times \text{pf} = E \times I \times \text{pf} \qquad \text{a-c circuit}$$

Suppose in Fig. 49 that the voltage E is 50 V, the current is 3 A, and the pf of the circuit is 0.6. Then

$$P = E \times I \times \text{pf} = 50 \times 3 \times 0.6 = 90 \text{ W}$$

Hence, the power used in the circuit is 90 W. The apparent power is $50 \times 3 = 150$ VA.

The following formula, which is identical with one of the formulas for power in a d-c circuit, may also be used for finding power in an a-c circuit:

$$P = I^2R \qquad \text{a-c or d-c circuit}$$

When using this formula for power, it is important to remember that R is the resistance of the circuit, and not the impedance Z. In Fig. 40 the power is

$$P = I^2R = 0.312^2 \times 200 = 19.5 \text{ W}$$

WHAT HAVE YOU LEARNED?

1. In an RC circuit such as that shown in Fig. 49 the positive portions of curve P are (a) *(greater) (less)* than the negative portions. The circuit (b) *(is) (is not)* dissipating power. The voltage and current (c) *(are) (are not)* 90° out of phase. As indicated by the shaded portions of curve P, (d) *(some) (none) (all)* of the power supplied by the source is returned to the source.

ANSWERS

1. (a) Greater; (b) is; (c) are not; (d) some

13 POWER USED BY L AND C . . . In calculating power in a-c circuits you must never for a moment forget that the *power consumed by perfect capacitors and inductors is always zero.* Only the resistance in a circuit dissipates power. If the voltage across a capacitor or an inductor is 20 V and current through the unit is 3 A, the power used is 0 W, assuming perfect inductors and capacitors.

Since all coils have some resistance, any practical inductor will use some power. However, a practical inductor is represented in diagrams by an equivalent circuit consisting of a perfect inductor with a resistor connected in series to represent the resistance of the inductor. In Fig. 50, for example, the 10 Ω of R is the resistance of the coil. The only power used by the entire circuit is that dissipated in resistance R. Since R is in fact part of the coil, the power would actually be dissipated within the coil as heat.

WHAT HAVE YOU LEARNED?

1. Determine the power dissipated in the circuit of Fig. 50.

2. Find (a) the power consumed by the circuit of Fig. 37(a) and

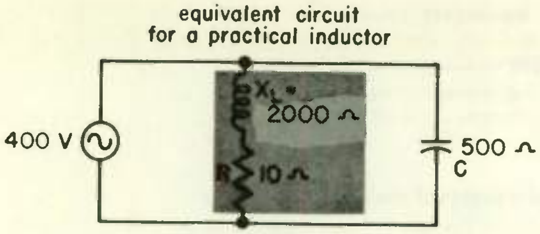

Fig. 50 **A circuit with a practical inductor represented by an equivalent circuit.**

(b) the power consumed by the circuit of Fig. 41(a). In both cases use the formula $P = I^2R$.

3. Repeat Problem 2, but in both cases use the formula $P = E^2/R$.

ANSWERS

1. 0.4 W . . . First calculate the impedance of the inductive branch of the parallel circuit.

$$Z = \sqrt{X_L^2 + R^2} = \sqrt{2000^2 + 10^2} = \sqrt{4{,}000{,}100} = 2000.025\ \Omega$$

The current through the inductive branch is

$$I = \frac{E}{Z} = \frac{400}{2000.025} = 0.200\ \text{A}$$

The power dissipated in R is then $P = I^2R = (0.200)^2 \times 10 = 0.4$ W. We do not have to work with the capacitive branch of the circuit because no power is dissipated in the capacitor.

2. (a) 480 W . . . From Fig. 37(b) we know that the voltage across R is 120 V. The current through R is then

$$I = \frac{E}{R} = \frac{120}{30} = 4.0\ \text{A}$$

The power dissipated is then $P = I^2R = 4.0^2 \times 30 = 480$ W.

(b) 1000 W . . . $P = I^2R = 5^2 \times 40 = 1000$ W. The current of 5 A was determined in a preceding What Have You Learned problem.

3. (a) 480 W . . . $P = \dfrac{E^2}{R} = \dfrac{120^2}{30} = 480$ W.

(b) 1000 W . . . The current through R is 5 A. The voltage across R is then $E_R = IR = 5 \times 40 = 200$ V.

$$P = \frac{E^2}{R} = \frac{200^2}{40} = 1000\ \text{W}.$$

14 MORE ABOUT POWER FACTOR . . . The ratio of the real power P to the apparent power P_A also yields the power factor of a circuit. By equation,

$$\text{pf} = \frac{P}{P_A} = \frac{P}{E \times I}$$

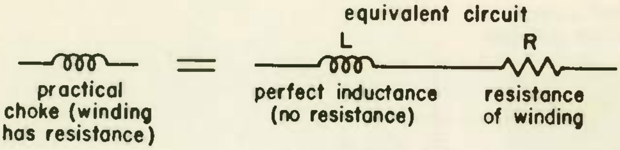

Fig. 51 **Equivalent circuit of a practical choke.**

Thus, we may compute pf if we know the real and the apparent power.

The unit for real power is the watt, and the unit for apparent power is the volt-ampere. This different unit assignment is made to further distinguish between real and apparent power.

WHAT HAVE YOU LEARNED?

1. An 8-H inductor has a resistance of 290 Ω. It is to be connected to a 120-V 60-cycle circuit. Find the impedance (a) ________ , current (b) ________ , real power (c) ________ , apparent power (d) ________ , and power factor (e) ________ . HINT: X_L and Z must be found first.

ANSWERS

1. (a) 3028 Ω; (b) 0.0396 A; (c) 0.455 W; (d) 4.75 VA; (e) 0.0958.

15 THE FIGURE OF MERIT Q OF A CHOKE . . . A perfect inductor would have only reactance and therefore would dissipate no power. That's the kind of choke we would all like to have. Unfortunately, the winding of every practical choke has resistance, and this resistance eats up power. Figure 51 shows that a practical choke is equivalent to a perfect inductance in series with a resistance.

The best chokes are those in which R is the least in comparison to the amount of reactance. The ratio of X_L to R is called the Q of the coil. Coil Q is a figure of merit that measures how close the choke comes to the ideal of having all reactance and no resistance. The higher the Q of an inductor, the better its quality.

$$Q = \frac{X_L}{R}$$

EXAMPLE . . . Find the Q of a coil with an inductance of a 0.5 mH and a winding resistance of 30 Ω. The coil is operating at a frequency of 2 MHz.

SOLUTION . . .

$$X_L = 2\pi fL = 6.28 \times 2 \times 10^6 \times 0.5 \times 10^{-3} = 6280\ \Omega$$

$$Q = \frac{X_L}{R} = \frac{6280}{30} = 209.3\ \textit{ans.}$$

Since X_L varies with frequency, the Q of a coil depends upon the operating frequency. The higher the frequency the higher the X_L. Remembering that Q equals X_L/R, this makes it appear that the higher the frequency the higher the Q. But that is not necessarily so. When the frequency goes up, the resistance R also increases. Whether the Q goes up or down depends upon whether X_L or R increases the fastest when the frequency is raised.

The resistance R of a choke is not the resistance you read with an ohmmeter. That would be the d-c resistance, which, of course, would not change. The resistance value used for calculating Q is the a-c resistance at the operating frequency, and this resistance value is much higher at r-f frequencies than the d-c resistance.

One reason for the higher value of R at r-f is skin effect. R-f current does not utilize the entire wire area, but only travels near the surface of the wire. Because only part of the surface of the wire is in use, the resistance of a choke at radio frequencies is far higher than the d-c resistance, and the higher the frequency the higher the r-f resistance will be. A good r-f choke should have a Q of at least 50, and Q's of 150 are common. For special purposes more expensive chokes with Q's up to several hundred are available.

Since in practically any choke X_L is more than ten times R, the impedance Z of a choke can be considered as equal to X_L. Hence, approximately, $Q = Z/R$. Since pf $= R/Z$, we see that the power factor of a choke is approximately equal to the reciprocal of its Q, or conversely, the Q of a choke is approximately equal to the reciprocal of its power factor.

WHAT HAVE YOU LEARNED?

1. Find the Q of a coil with an inductance of 3 mH operating at a frequency of 455 kH if the r-f resistance of its winding is 75 Ω.

2. What is the power factor of the coil of Problem 1?

3. Increasing the operating frequency in Problem 1 will *(increase) (decrease) (not change) (either increase or decrease)* the Q of the coil.

4. If the power factor of a coil is 2 per cent, what is the Q of the coil?

ANSWERS

1. 114 . . . Find the reactance of the coil:

$$X_L = 2\pi fL = 6.28 \times 455 \times 10^3 \times 3 \times 10^{-3} = 8570\,\Omega$$

$$Q = \frac{X_L}{R} = \frac{8570}{75} = 114$$

2. 0.00877 . . . The power factor is approximately equal to the reciprocal of the Q: $\text{pf} = \frac{1}{Q} = \frac{1}{114} = 0.00877$.

3. Either increase or decrease

4. 50 . . . $Q = \frac{1}{\text{pf}} = \frac{1}{0.02} = 50$.

NONSINUSOIDAL WAVEFORMS

The formulas for reactance and the rules in this lesson for working a-c circuit problems *apply only to sine waves.* We study electronics in terms of sine waves. One reason is that a sine wave is the most commonly occurring waveshape. It is the natural waveshape because most oscillators and other a-c generators inherently develop sine waves and because electronic circuits often turn nonsinusoidal waves into sine waves. When a sine wave goes into an *LCR* circuit, a sine wave also comes out. If any other waveshape is applied to an *LCR* circuit, the output wave is usually different from the input wave. This shows why it is easier to study electronics in terms of sine waves. Sine waves are as natural to electronics as round wheels are to rolling vehicles.

But if all our rules apply only to sine waves, what do we do with waves that are not sine waves? The answer is simpler than it might seem, because all nonsinusoidal waves can be considered as being made up of a number of sine waves at different frequencies (a fundamental frequency and various harmonic frequencies). Thus the action of a nonsinusoidal wave can be determined by considering in turn each of its sine-wave components.

16 HARMONICS . . . Figure 52 shows several sine waves, each representing a different frequency. Observe that, during the time required for the upper wave to complete one cycle, the wave immediately beneath completes two cycles. The frequency of the wave that completes two cycles is twice that of the upper one.

In electronics, when there is a whole-number relationship between

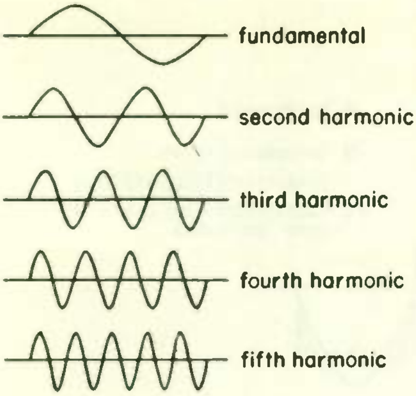

Fig. 52 **Sine-wave harmonics.**

two sine waves, they are said to be *harmonically related.* In Fig. 52 the second wave is called the *second harmonic* of the upper wave and the third wave, which completes three cycles in the time required for the upper wave to complete one cycle, is called the *third harmonic.* Another name for the upper wave is the *fundamental* or, sometimes, *first harmonic.* All of the waveforms shown in Fig. 52 are harmonics of the fundamental. Sometimes the harmonics are identified as even or odd as well as by number. The *even harmonics* are the second, fourth, sixth, etc.; the *odd harmonics* are the fundamental, third, fifth, seventh, etc.

EXAMPLE . . . What is the frequency of the third harmonic of 60 cycles? The fourth harmonic?

SOLUTION . . . To find the third harmonic of a fundamental, multiply by 3. The product of 60 cycles and 3 equals the third harmonic, 180 cycles. The fourth harmonic is 4 times 60, or 240 cycles.

WHAT HAVE YOU LEARNED?

1. The fundamental of a sinusoidal waveform is 100 kHz. The fifth harmonic is ______ kilohertz.

2. 450 kHz is the ninth harmonic of ______ kilohertz.

3. In some cases a perfect sine wave is desired. The term "distortion" in this case applies to the lack of perfection in such a wave and is usually rated in percentage. The distortion is caused by harmonics

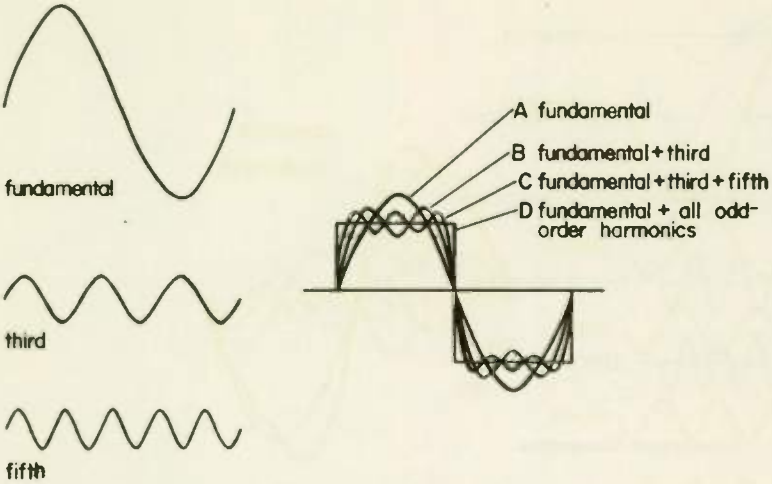

Fig. 53 Result of combining fundamental and harmonics.

mixed with the perfect wave. For example, a 100-V waveform with 2 per cent second-harmonic distortion would contain ______ volts of the second harmonic.

ANSWERS

1. 500 2. 50 3. 2.

17 HOW COMBINING FUNDAMENTAL AND HARMONICS PRODUCES A NONSINUSOIDAL WAVE . . . All waveforms, no matter how complex, and regardless of their shape, are combinations of sine waves. Figure 53 shows the fundamental, the third harmonic, the fifth harmonic, and the result of adding the three waveforms together.

When two frequencies, one of them 3 times the other, are imposed upon the same conductor, the result is a wave with a shape as shown by curve *B*, Fig. 53. Conversely, whenever you see a curve like *B*, you know that it is actually made up of sinusoidal frequencies, a fundamental and its third harmonic.

Combine the fifth harmonic with the fundamental and third harmonic, and curve *C* of Fig. 53 is the result. Notice that this curve is roughly the shape of a square wave. If the fundamental frequency and all odd harmonics are combined in suitable proportions, the result will be the true square wave of curve *D*. Hence, a square wave is not just a single frequency, but is made up of many frequencies, namely, the funda-

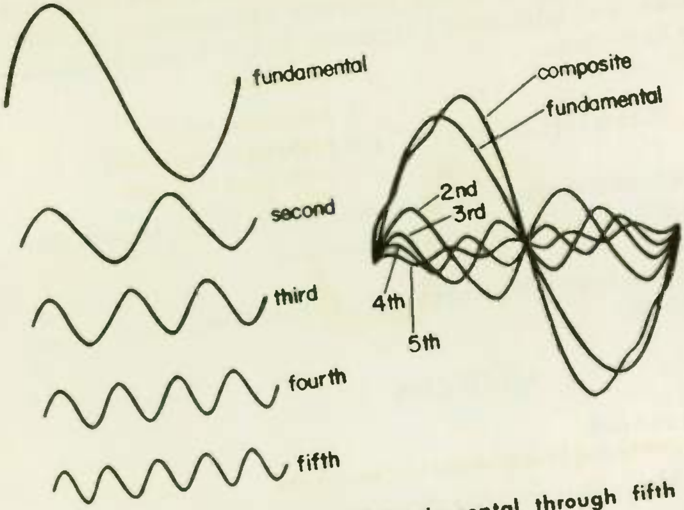

Fig. 54 The composite of fundamental through fifth harmonic which approaches a sawtooth wave.

mental and all its odd harmonics. Any waveshape that is not a sine wave can be shown to be made up of a fundamental sine wave and certain harmonic sine-wave frequencies of the fundamental.

If an amplifier distorts a sine wave, the wave is no longer sine-shaped, and it therefore consists of more than one frequency, a fundamental and certain harmonics. Hence, amplitude distortion in an amplifier is accompanied by the generation of spurious harmonic frequencies that were not in the input to the amplifier.

Figure 54 shows the fundamental and second through fifth harmonics, as well as the resultant waveform when the five frequencies have been combined. This waveform approaches in appearance the teeth of a saw and is therefore called a sawtooth wave. A perfect sawtooth wave results when the fundamental and all harmonics are combined.

Let us make some comparisons between Figs. 53 and 54. The square wave shown in Fig. 53 is perfectly symmetrical; that is, the bottom half and the top half are mirror images. Such is not the case with the sawtooth waveform of Fig. 54. Although the same amount of waveform exists above and below the zero line, the two parts of the curve are not mirror images. If the waveform were perfectly symmetrical, the slight curve would be shown at the start rather than the finish o the negative half.

If a waveform is perfectly symmetrical, it contains odd-order harmonics only. If a waveform is not perfectly symmetrical, it might contain both even- and odd-order harmonics, but it is certain to contain even-order harmonics.

WHAT HAVE YOU LEARNED?

1. A composite waveform resembles a square wave. What type of harmonics are present? ________ .

2. Another waveform resembles a sawtooth. In this case, ____________ harmonics are present.

ANSWERS

1. Odd   2. Even and odd.

SUMMARY . . . Many waves other than pure sine waves are found in actual practice. In such cases, the pure sine wave, called the fundamental, is associated with other sine waves whose frequencies are harmonics of the fundamental. The resultant waveform is the composite of the fundamental and the harmonics that are present. Harmonics of frequencies an even number of times greater than the fundamental are called even harmonics. Those with frequencies an odd number of times greater than the fundamental are called odd harmonics.

As shown in Figs. 53 and 54, the fundamental sine wave is generally greater in amplitude than the harmonics. Also observe in Figs. 53 and 54 that the time required for the square wave and sawtooth wave to complete their cycles is the same in each case as the time required for one cycle of the fundamental.

LESSON 2315

CURRENTS AND VOLTAGES IN A-C CIRCUITS

EXAMINATION

Circle the number of the correct answer for each question that follows. When you are finished, transfer the answers to the answer sheet by putting X's in the proper squares. When the graded answer sheet is returned to you, correct in this book any questions you may have missed. By doing so, you will have a record of the correct answers to all questions for review purposes.

1. If one frequency is a whole number of times greater than another frequency, the two are said to be
   (1) in phase. (3) harmonically related.
   (2) out of phase. (4) mutually resonant.

2. The fifth harmonic of 455 kHz is
   (1) 45.5 kHz. (2) 4550 kHz. (3) 91 kHz. (4) 2275 kHz.

3. 3690 kHz is the ninth harmonic of
   (1) 33210 kHz. (2) 410 kHz. (3) 3681 kHz. (4) 3699 kHz.

4. The power factor of a circuit may be defined as
   (1) the ratio of impedance to resistance.
   (2) the ratio of resistance to impedance.
   (3) the ratio of reactance to resistance.
   (4) the ratio of resistance to reactance.

5. A series circuit contains inductive reactance of 60 Ω and a resistance of 80 Ω. The power factor of this circuit is
   (1) 1.67. (2) 0.8. (3) 0.75. (4) 1.33.

6. The power factor of an *RLC* circuit may be determined if we know
   (1) the resistance and the capacitance.
   (2) the resistance and the inductance.
   (3) the apparent and real power.
   (4) any of the above.

7. In an a-c circuit containing *R* and *L*, if the inductive reactance is increased (*R* not changing), the power factor of the circuit will
   (1) remain the same. (3) increase.
   (2) decrease. (4) equal 1.

8. In a circuit containing a capacitor alone with an a-c voltage applied, the current will
   (1) be in phase with the applied voltage.
   (2) lag the applied voltage by 90°.
   (3) lag the applied voltage by 45°.
   (4) lead the applied voltage by 90°.

9. Ohm's law for a-c circuits states that
   (1) current is the product of voltage and impedance.
   (2) current equals voltage divided by resistance.
   (3) voltage is the ratio of current to impedance.
   (4) current equals voltage divided by impedance.

10. A series circuit containing a reactance of 30 Ω and a resistance of 40 Ω is connected across an a-c source of 50 V. The current is
(1) 1.67 A. (2) 0.6 A. (3) 1.0 A. (4) 1.25 A.

11. A coil with a resistance of 5 Ω passes 0.3 A of current through the winding when 110 V at 60 Hz is applied. The impedance of the coil is
(1) 36.67 Ω. (2) 1.5 Ω. (3) 367 Ω (4) 15 Ω.

12. An a-c circuit contains an inductive reactance of 100 Ω and a resistance of 100 Ω. The phase angle θ, between the current and the voltage is
(1) 15°. (2) 45°. (3) 60°. (4) 90°.

13. A series *RLC* circuit contains a resistance of 4 Ω, an inductive reactance of 4 Ω, and a capacitance reactance of 1 Ω. The applied alternating voltage is 50 V. The voltage drop across the inductance is
(1) 40 V. (2) 4 V. (3) 50 V. (4) 5 V.

14. A series-resonant circuit consisting of a resistance of 615 Ω and equal inductive and capacitive reactance of 175 Ω has 260 V applied. The voltage drop across the resistance is
(1) 26 V. (2) 260 V. (3) 13 V. (4) 130 V.

15. What is the voltage across the inductance in Fig. 55?
(1) 49.5 V. (2) 62.4 V. (3) 125 V. (4) 175 V.
(5) None of the above

16. What is the voltage across the capacitor in Fig. 55?
(1) 31.7 V. (2) 80 V. (3) 122 V. (4) 134 V.
(5) None of the above

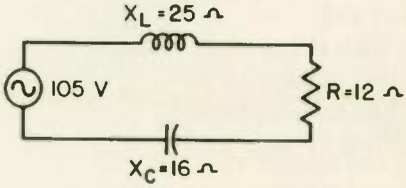

Fig. 55

17. What is the voltage across the resistor in Fig. 55?
(1) 23.8 V. (2) 60 V. (3) 84 V. (4) 105 V.
(5) None of the above

18. What is the power dissipated in the inductor of Fig. 55?
    (1) 0 W. (2) 104.8 W. (3) 441 W. (4) 1225 W.
    (5) None of the above

19. What is the power dissipated in the resistor of Fig. 55?
    (1) 0 W. (2) 84 W. (3) 588 W. (4) 918 W.
    (5) None of the above

20. What is the power factor of the circuit of Fig. 55?
    (1) Approximately 0.5
    (2) Approximately 0.6
    (3) 0.75
    (4) 0.80
    (5) None of the above

21. One way to find power in an a-c circuit is to use the formula
    (1) $P = I^2R$. (2) $P = I^2Z$. (3) $P = E \times I$. (4) $P = \frac{R}{Z}$.

22. Which circuit of Fig. 56 would you use for a phase-shifting network in which you want the output wave to lag the input wave by as near 90° as practical?
    (1) (a) (2) (b) (3) (c) (4) (d)

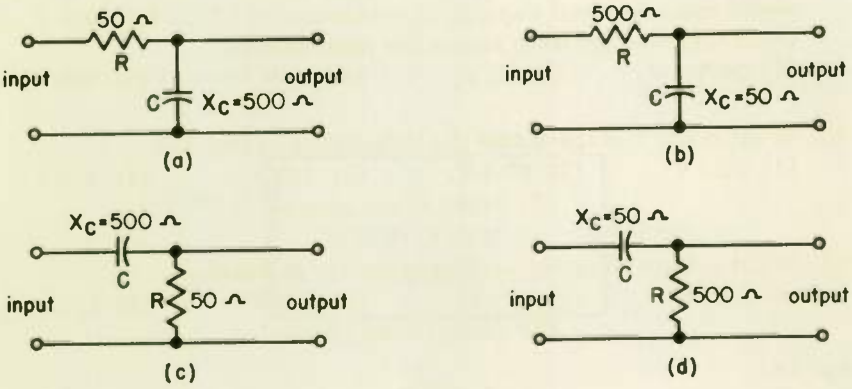

Fig. 56

23. The amount of phase shift obtained with an *RL* or *RC* phase-shifting network
    (1) varies with the frequency.
    (2) is the same at all frequencies.
    (3) varies with frequency in an *RL* circuit but not in an *RC* circuit.
    (4) varies with frequency in an *RC* circuit but not in an *RL* circuit.

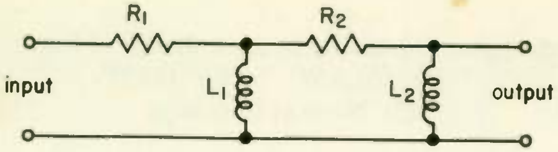

Fig. 57

24. With proper values of *R*'s and *L*'s, the circuit of Fig. 57 can provide a phase shift
(1) not to exceed 45°.
(2) not to exceed 90°.
(3) not to exceed 120°.
(4) not to exceed 180°.
(5) not to exceed 270°.
(6) not to exceed 360°.

25. If the frequency of the voltage applied to an *RL* series circuit is increased, the power factor of the circuit
(1) is increased.
(2) is decreased.
(3) stays the same.

26. It is usually desirable for a choke coil to have
(1) a high power factor.
(2) a low power factor.
(3) a low *Q*.
(4) a high resistance.

27. If the operating frequency of a choke is decreased, the *Q* of the choke will
(1) increase
(2) decrease.
(3) not change.
(4) either increase or decrease.

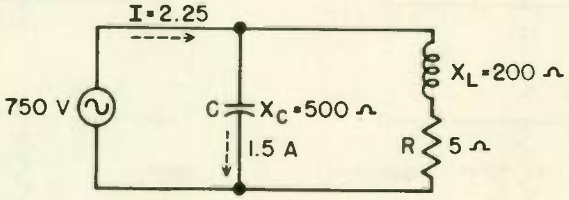

Fig. 58

28. The power used by the circuit of Fig. 58 is
(1) 2.81 W.
(2) 11.25 W.
(3) 25.3 W.
(4) 70.3 W.
(5) 1687 W.
(6) 2812 W.

END OF EXAM


CLEVELAND INSTITUTE OF ELECTRONICS

CLEVELAND INSTITUTE OF ELECTRONICS / CLEVELAND, OHIO

electronics

CLEVELAND INSTITUTE OF ELECTRONICS / CLEVELAND, OHIO

Amplifier Circuitry

2405-4

An AUTO-PROGRAMMED® Lesson

ABOUT THE AUTHOR

This text on Amplifier Circuitry was written by Jacob J. Gustincic and technically edited by the staff of Cleveland Institute of Electronics. Our purpose in this is to ensure that the material presented was accurate, useful, and interesting.

Jacob Gustincic is a graduate of the Case Institute of Technology where he received his Bachelor of Science, Master of Science and Doctor of Philosophy degrees in Electrical Engineering. He is currently an Assistant Professor at UCLA.

Mr. Gustincic has had extensive experience as a technician primarily in maintenance repair, and operation of police department electronics equipment. He is a radio ham and his call letters are W8RAC.

This is an AUTO-PROGRAMMED* Lesson exclusive with the Cleveland Institute of Electronics. It is your assurance of the finest in technical education and training.

*Registered Trademark

Accredited by the Accrediting Commission of the National Home Study Council

The Accrediting Commission has been approved by the U.S. Office of Education as a "nationally recognized accrediting agency".

CLEVELAND INSTITUTE OF ELECTRONICS

Amplifier Circuitry

By JACOB J. GUSTINCIC, Ph.D.
Assistant Professor
University of California at Los Angeles

2405-4

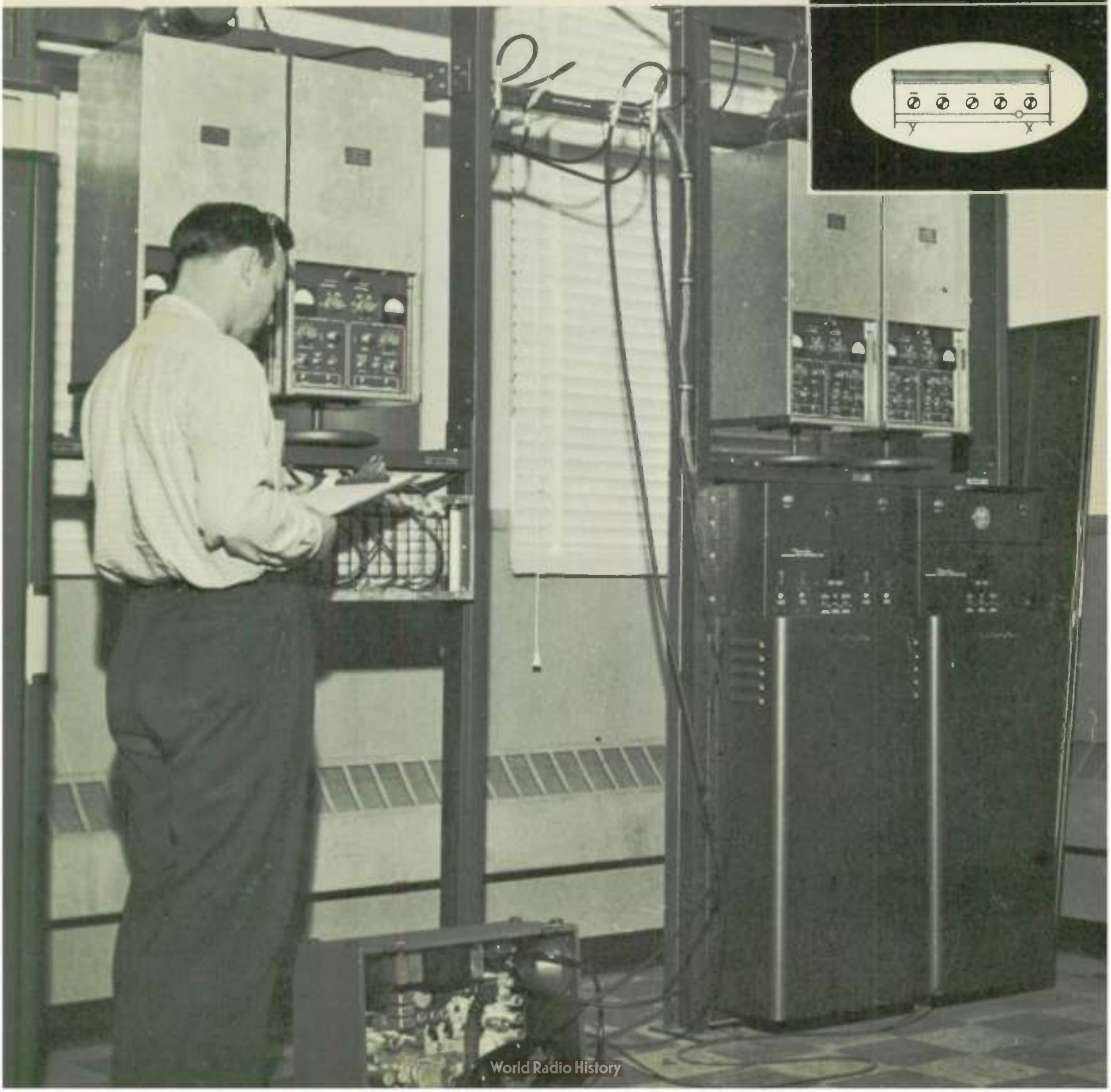

In this lesson you will learn...

A microwave relay station that includes many amplifiers working on principles explained in this lesson.

Photo: Courtesy, Motorola, Inc., Communications and Electronics Division

Library of Congress Catalog Card Number 63-12733

SECOND EDITION/Fifth Revised Printing/November, 1967.

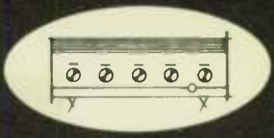

A chat with your instructor

In this lesson you will learn how resonant circuits can be used in place of inductors or resistors in amplifiers to steer the a-c and d-c current components into their proper paths.

The advantage of using resonant circuits for this purpose is that they can be tuned to offer a high impedance at any desired frequency and a low impedance to all other frequencies. Because of the frequency-sensitive impedance of resonant circuits, the amplifier responds to one desired frequency and rejects all others. Thus, resonant circuits are used in r-f amplifiers where it is generally desirable to be able to tune to a specific desired frequency. Resonant circuits would not be used in audio amplifiers where it desired to amplify all audio frequencies.

You will learn in this lesson that an oscillator is simply an amplifier in which part of the output signal is fed back to the input. Since it is difficult to avoid a certain amount of signal feedback from output to input, all amplifiers tend to oscillate. In fact, special precautions must be taken to prevent oscillations in amplifiers. One important precaution you will learn about in this lesson is to use neutralizing circuits, which are widely found in transmitters.

There are a number of different modes of operation to which vacuum tubes can be adjusted for use as amplifiers. These are referred to as class A, class AB, class B, and class C operation. In this lesson you will learn the characteristics and uses of each class of operation.

A word on circuit drawings. Never try to "memorize" a diagram. Instead, study each diagram and its explanation in the text until you know the purpose of every part of the circuit and why the part is connected the way it is. Then when you try to redraw the circuit from memory, think of what parts are needed to make the circuit work and how they must be connected to each other.

When you think you have your diagram about right, check to see if you have proper d-c paths to furnish the needed operating voltages for the tube elements and suitable a-c paths for delivering the signal from the input to the output. Does the circuit have the proper blocking components to force the a-c to follow the proper path and keep the d-c out of circuits where it is not wanted?

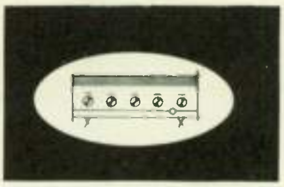

Amplifier Circuitry

1 REVIEWING THE BASIC AMPLIFIER CIRCUIT . . . Before proceeding, let us stop for a moment and look over the circuit of a basic vacuum-tube amplifier. This circuit is shown in Fig. 1. An input signal from a microphone is amplified and fed to a pair of headphones. Two batteries are used to supply bias voltages to the tube. E_{cc} supplies a negative voltage to the grid through choke L_1, which is a short to this d-c voltage. E_{bb} supplies a positive voltage to the plate of the tube and causes a d-c plate current I_b to flow through the tube and through the choke L_2, which is also a short for d-c.

The a-c voltage from the microphone passes through C_1 to the grid and varies the resistance of the tube in such a way that amplified a-c appears on the plate current I_b. The high a-c impedances of the chokes L_1 and L_2 prevent the a-c input and output voltages from being shorted to ground through the bias batteries E_{cc} and E_{bb}. The capacitors C_1 and C_2 prevent the d-c bias batteries E_{cc} and E_{bb} from being shorted to ground through the microphone and headphones while allowing the a-c to pass in and out of the amplifier circuit.

Notice that this amplifier is relatively insensitive to the frequency of the input signal. So long as the input frequency is such that the

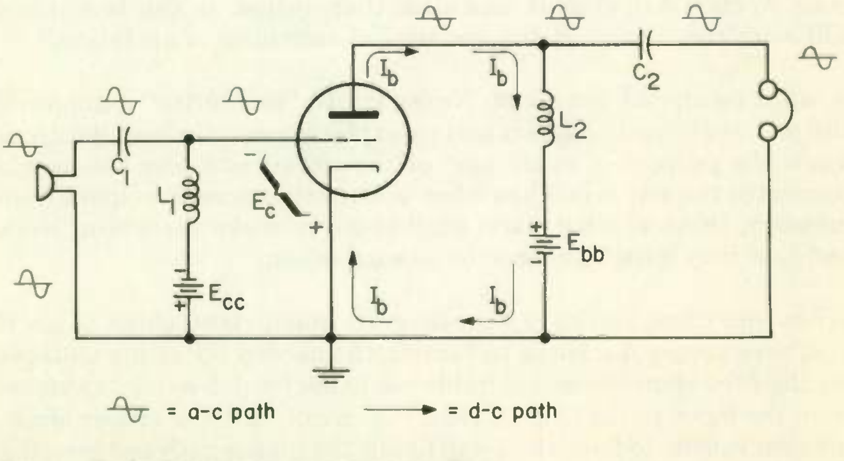

Fig. 1 The basic frequency-insensitive amplifier.

chokes have high impedance and the capacitors have low impedance, the amplifier will work properly. For example, the circuit of Fig. 1 could be made to amplify a 100-cps signal equally well as a 1-kc signal and all the frequencies in between.

WHAT HAVE YOU LEARNED?

1. Refer to the circuit of Fig. 1. What would happen if capacitor C_1 suddenly shorted out so that d-c could pass through it? (a) ____. If the microphone is also a short for d-c, what is the total voltage appearing on the grid of the tube under this condition? (b) ____. Now suppose that instead of C_1 shorting, the windings of L_1 short so that L_1 is a complete short circuit to both d-c and a-c. What is the total voltage appearing on the grid under this condition? (c) ____. Suppose you put on the headphones and receive an unpleasant d-c shock. You discover the plate supply voltage E_{bb} is appearing on the headphones and has shorted to the case, giving you the shock. You immediately know that (d) ______ has shorted. If the circuit is working normally but L_2 shorts, will you hear anything on the phones? Why? (e) ______ ____.

2. The circuit of Fig. 1 will amplify any signal whose frequency is high enough that the chokes (a) *(block) (pass)* a-c and high enough that the capacitors (b) *(block) (pass)* a-c.

ANSWERS

1. (a) The d-c voltage from E_{cc} would appear on the microphone.
   (b) Only the a-c voltage from the microphone, since E_{cc} is shorted to ground through L_1 and the microphone.
   (c) Only the d-c bias voltage E_{cc}, since the a-c signal is then shorted to ground through L_1 and E_{cc}.
   (d) C_2 . . . This is the only way E_{bb} can get to the headphones.
   (e) No, because the a-c output shorts to ground through L_2 and E_{bb}.
2. (a) Block; (b) pass.

ADDING SELECTIVITY TO AN AMPLIFIER

In many radio applications it is desirable to use an amplifier which will amplify a signal of one particular frequency and, at the same time, reject all other signals having different frequencies. The amplifiers you have studied thus far amplify a large range of input signals equally well regardless of their frequency. In the following sections you will see how *LC* resonant circuits are used to give an amplifier "selectivity" so that it can select a certain narrow range of frequencies to be amplified while rejecting all others.

2 REVIEWING THE PARALLEL *LC* CIRCUIT . . . A parallel *LC* resonant circuit has a most valuable property. This circuit offers a very high impedance to a voltage near its resonant frequency and a low impedance at all other frequencies.

Figure 2 shows a typical *LC* parallel circuit that is resonant at 1 mc with $L = 0.254$ mh, $C = 100$ pf (picofarads), and R (the resistance of the inductor L) $= 16$ ohms. Also shown is the curve which describes how the impedance of this circuit varies with frequency. At the resonant frequency this circuit has a very high impedance, about 159,000 ohms. The impedance drops sharply as the frequency changes from resonance. For example, at 0.95 mc the impedance of the circuit is only about 215 ohms. The width of this curve tells you the range of frequencies over which the *LC* circuit has a relatively high impedance.

In Fig. 2 the impedance of the *LC* combination is greater than 100,000 ohms for frequencies in the range 0.99 to 1.01 mc. This narrow range of frequencies over which the impedance is high is determined by the *Q* of the *LC* circuit. At most radio frequencies the resistance of the inductor *L* can be made small enough (making the *Q* high) that the im-

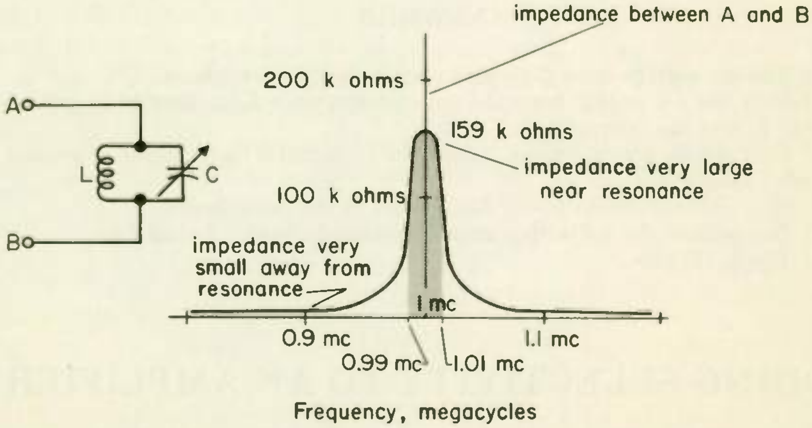

Fig. 2 The impedance of the LC circuit is greater than 100 kilohms between 0.99 and 1.01 mc.

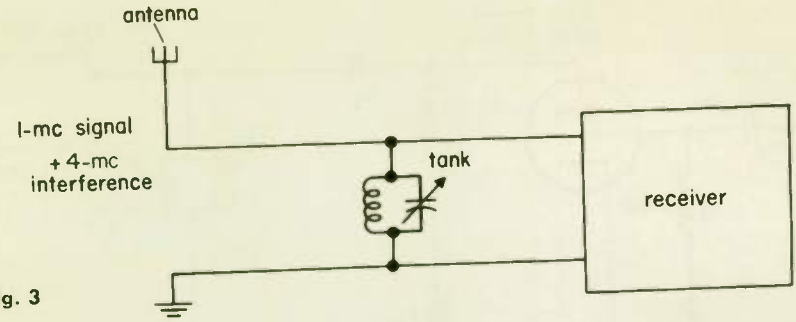

Fig. 3

pedance of the *LC* circuit is very large for a very small range of frequencies. Thus the *LC* parallel resonant circuit has a low impedance except at a narrow range of frequencies near its resonant frequency. Parallel *LC* resonant circuits used in radio work are often called *tank circuits.*

WHAT HAVE YOU LEARNED?

1. A parallel tank circuit has a very (a) *(high) (low)* impedance near its resonant frequency and a very (b) *(high) (low)* impedance at other frequencies. You are listening to a 1-mc broadcast signal on a receiver and find that a 4-mc signal is interfering with the signal you desire to listen to. A tank circuit you have on hand has an impedance of 200,000 ohms at 1 mc and an impedance of 5 ohms at 4 mc. You connect the tank circuit as shown in Fig. 3. The 1-mc signal will then see (c) ________ kilohms of impedance shunted across the input of the receiver by the tank. The 4-mc interference will see (d) ________ ohms of impedance shunted across the input. The 4-mc interference signal will then rather flow through the (e) ________ circuit than the receiver input, and this interfering signal will essentially be shorted to ground. The 1-mc input signal is not shorted to ground, since the impedance of the tank circuit is very high at 1 mc. If the interfering signal had a frequency of 1.001 mc, would this circuit eliminate the interference? (f) ________

ANSWERS

1. (a) High; (b) low; (c) 200 kilohms; (d) 5 ohms; (e) tank (f) No . . . 1.001 mc is too near the resonant frequency of the tank, so the interfering signal would also see a high impedance to ground.

3 THE TUNED PLATE CIRCUIT . . . Figure 4 shows an amplifier with which you are already familiar except for the parallel *LC* resonant circuit which has been shunted directly across the output to make the

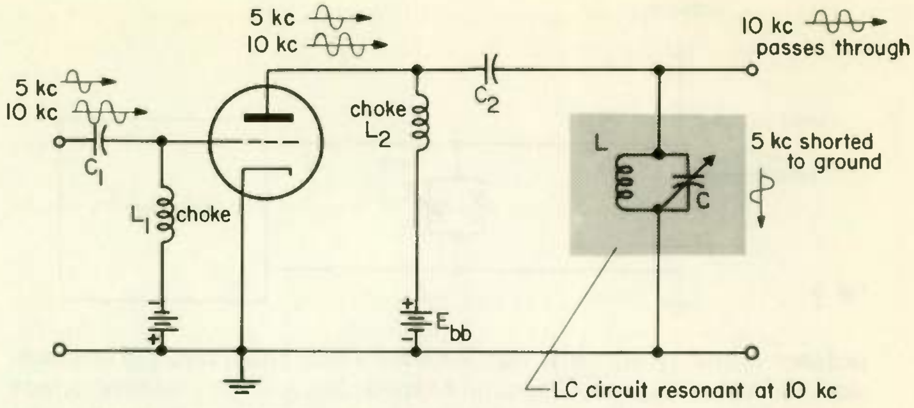

Fig. 4 **An unwanted 5-kc signal shorted out by the LC resonant circuit.**

amplifier selective. Two signals are shown entering the amplifier; one has a frequency of 5 kc and the other a frequency of 10 kc. It is desired to amplify the 10-kc signal and at the same time reject the 5-kc signal. To accomplish this, the *LC* resonant circuit is so tuned that it is resonant at 10 kc. It then offers a high impedance to the 10-kc signal and at the same time a low impedance to the 5-kc signal.

Since the tank circuit is shunted across the output of the amplifier, its low impedance at 5 kc shorts the unwanted signal to ground while its high impedance at 10 kc lets the 10-kc signal pass out of the amplifier unaffected. Because of the *LC* circuit, the amplifier has been made selective, so that only a signal having a frequency very near to 10 kc can pass through the circuit without being shorted to ground at the output.

When analyzing amplifiers, it will help a great deal if you think of the parallel tank circuit as being an open circuit when very near its resonant frequency and a short circuit for all other frequencies. Of course, because of the inductor, a parallel *LC* circuit is always a short for d-c current. The amplifier of Fig. 4 is said to have a *shunt-fed* or *parallel-fed,* plate circuit, since the *LC* combination is shunted across the output.

WHAT HAVE YOU LEARNED?

1. The impedance of a parallel tuned *LC* circuit is measured and found to be about 50 ohms at a frequency of 100 kc. This same circuit is also

found to exhibit an impedance of 100 kilohms at a frequency of 1 mc. Where would you expect the resonant frequency of this circuit to be? ______________.

2. In Fig. 4 what would happen if C_2 shorted so that is could pass d-c current? (a) ____
The d-c voltage on the plate of the tube under this condition would very nearly be (b) __________.

3. The amplifier of Fig. 4 is said to be selective because it amplifies only frequencies very near the (a) ______________ frequency of the *LC* output circuit. If the *LC* circuit of Problem 1 were used in the amplifier of Fig. 4, a 100-kc input signal would see (b) _______ ohms shunted across the output of the device, while a 1-mc input signal would see (c) ________ kilohms across the output. Which signal is nearly shorted out at the output? (d) ______________.

4. You desire to amplify the input signal to a radio receiver at a frequency of 2 mc and at the same time prevent amplification of unwanted interference which has a frequency of 1 mc. You could use the amplifier of Fig. 3 provided you tuned the tank circuit to a frequency of ________ megacycles.

ANSWERS

1. Near 1 mc . . . The impedance of the circuit is very large near 1 mc.
2. (a) The d-c plate supply voltage would short to ground through L_2 and L.
   (b) Zero.
3. (a) Resonant; (b) 50 ohms; (c) 100 kilohms; (d) 100 kc   4. 2 mc

4 THE SERIES-FED PLATE CIRCUIT . . . Besides the shunt-fed circuit, there is another way in which the *LC* circuit can be used in the output to provide selectivity. Remember that the purpose of the choke in the output circuit is to provide a high impedance to the a-c signal and a low impedance to the d-c plate supply voltage. Since the *LC* circuit itself presents a high a-c impedance at its resonant frequency and at the same time is a short for d-c, the *LC* circuit can be used in place of the choke in the output circuit as shown in Fig. 5.

In addition to replacing the choke, the *LC* circuit will at the same time be a short to all frequencies not near its resonant frequency. We take advantage of this property and provide a capacitor C_3 from the bottom of the *LC* circuit to ground. Now all unwanted frequencies will be shorted through the *LC* circuit and C_3 to ground. For example, 5- and 10-kc signals are simultaneously applied to the input of the

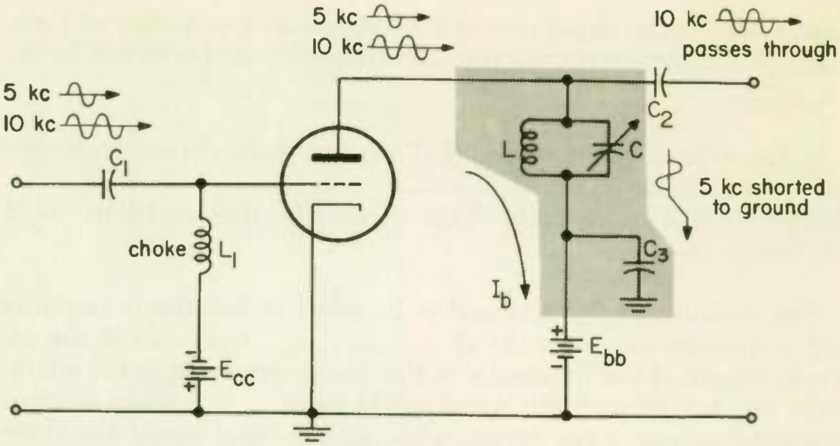

Fig. 5 A series-fed selective amplifier in which the *LC* circuit replaces the choke.

amplifier of Fig. 5, in which the *LC* circuit is tuned to 10 kc. At 10 kc the *LC* circuit has a very large impedance, so that the 10-kc signal passes through the amplifier unaffected. At the same time the 5-kc signal sees a low impedance in the *LC* circuit, so it is shorted through this circuit and through C_3 to ground.

Although the 5-kc signal could be shorted to ground through E_{bb} without the use of C_3, at high frequencies any practical plate supply will have some small a-c impedance. Therefore, C_3, which has a negligible impedance, is usually desirable. C_3 is called a *bypass capacitor,* since it allows the a-c to bypass E_{bb} on its way to ground.

The circuit of Fig. 5 is called a series-fed plate circuit, since the *LC* circuit is in series with the plate supply voltage E_{bb}. Note that in this type of circuit the coupling capacitor C_2 is always necessary to prevent the d-c plate supply voltage E_{bb} from appearing at the output terminals.

Note that although the parallel- and series-fed plate circuits have slightly different circuit configurations, their electrical operation is identical. In both cases (1) d-c is fed to the plate through an element which has low d-c impedance, (2) the signal to be amplified sees a high impedance to ground, and (3) the signals to be rejected are shorted through the *LC* circuit.

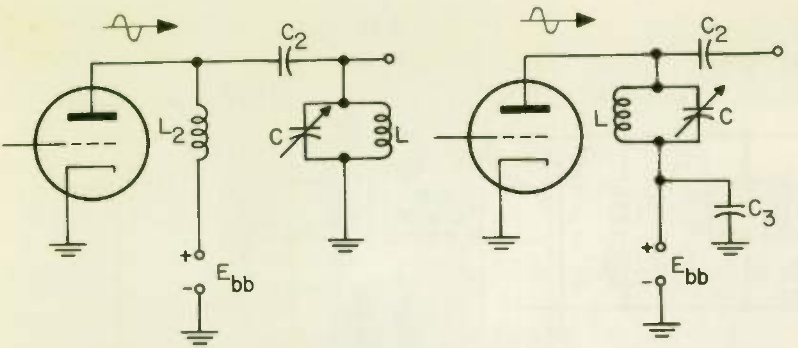

(a) Parallel-fed circuit

(b) Series-fed circuit

Fig. 6

WHAT HAVE YOU LEARNED?

1. Refer to Fig. 6, where a series-fed plate circuit and a parallel-fed plate circuit are shown. In the parallel-fed circuit of Fig. 6(a) the d-c plate current flows out of the plate supply E_{bb} through the tube and returns to E_{bb} through (a) ________. In the series-fed circuit of Fig. 6(b) the d-c plate current flows out of E_{bb} through the tube and returns to E_{bb} through (b) ________. In the parallel-fed circuit the a-c signal to be amplified appears on the plate of the tube and passes through C_2 to the output. The high impedance of (c) ______________ prevents this signal from being shorted to ground through E_{bb}. This signal is not shorted to the ground at the output because the *LC* circuit is resonant at its frequency and hence has a (d) *(large) (small)* impedance. In the series-fed circuit the signal to be amplified again passes from the plate of the tube to the output terminal unaffected since the high impedance of the (e) ________ circuit prevents it from being shorted to ground through E_{bb} or C_3. In the parallel-fed circuit, any unwanted signal of different frequency appearing at the plate of the tube passes through C_2 and is immediately shorted to ground by the (f) ________ circuit. In the case of the series-fed circuit, the unwanted signal is shorted to ground through the (g) ________ circuit and (h) ________.

ANSWERS

1. (a) L_2; (b) *L*; (c) L_2; (d) Large; (e) *LC*; (f) *LC*; (g) *LC*; (h) C_3

5 ADDING SELECTIVITY TO THE GRID CIRCUIT . . . You have seen how an *LC* resonant circuit can be added to the output end of an amplifier to short unwanted signals to ground and produce selectivity.

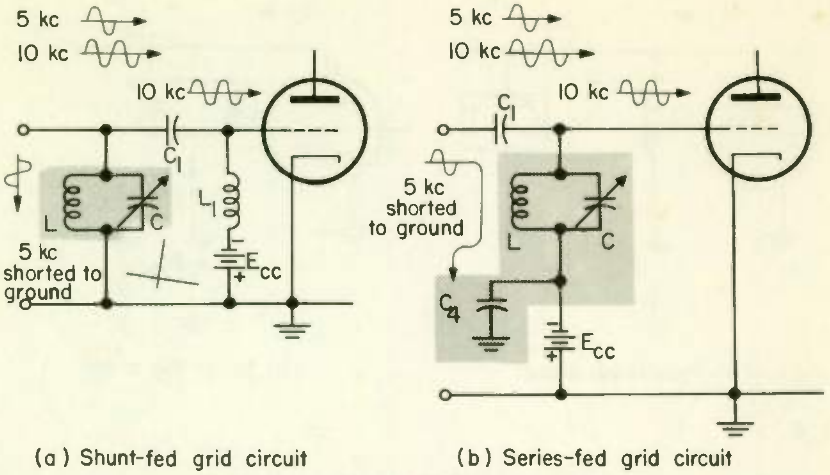

(a) Shunt-fed grid circuit (b) Series-fed grid circuit

Fig. 7 Addition of an LC resonant circuit to the grid circuit to provide selectivity.

In exactly the same way, an *LC* circuit can be added to the grid circuit of the amplifier to produce selectivity.

As in the case of the plate circuit, the grid of the amplifier can be series or shunt fed. Figure 7(a) shows a shunt-fed grid circuit in which the *LC* circuit is shunted across the input, and Fig. 7(b) shows the series-fed grid circuit in which the *LC* circuit is in series with the grid supply voltage E_{cc}. A bypass capacitor C_4 is provided in this case. A 10 kc signal to be amplified and an unwanted signal at 5 kc are shown entering the input terminal of the amplifier. In both cases the 10-kc signal passes unaffected to the grid of the tube because the *LC* circuit is tuned to 10 kc and thus presents a very large impedance at this frequency.

In the shunt-fed case the unwanted 5-kc signal is immediately shorted to ground at the input through the *LC* circuit. The d-c grid bias from E_{cc} is supplied to the grid through the choke L_1. In the case of the series-fed grid circuit, the 5-kc signal is shorted to ground through the *LC* circuit and the bypass capacitor C_4. Here the d-c grid bias from E_{cc} is supplied to the grid through the inductor *L* of the *LC* circuit.

WHAT HAVE YOU LEARNED?

1. Find the mistakes in the circuits of Fig. 8 and describe how these mistakes can be corrected. HINT: Check the following points. (1) Does

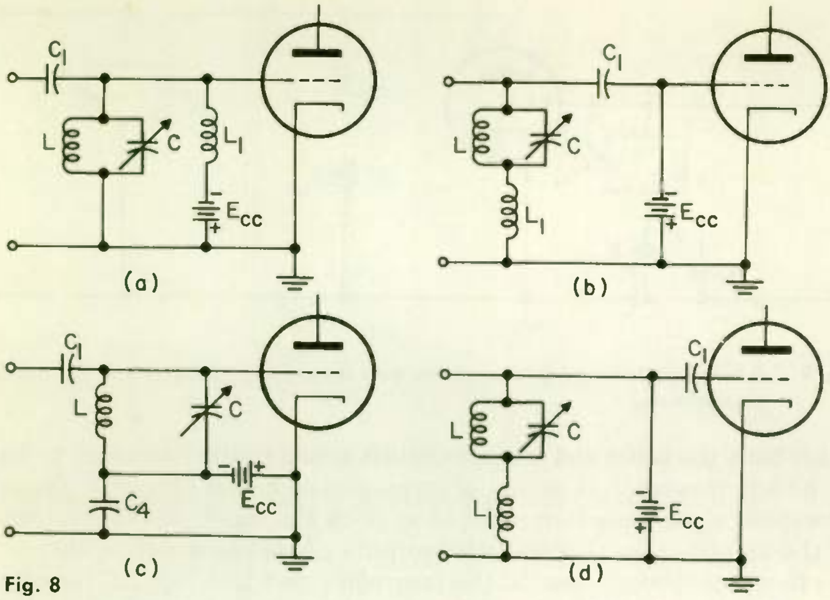

Fig. 8

the tube in each case have grid bias? (2) Does the wanted signal for each circuit see a high impedance to ground and a direct path to the grid? (3) Does the unwanted signal see a short circuit to ground?

ANSWERS

1. Circuit (a). Tube has no grid bias, E_{cc} is shorted to ground through L_1 and L. C_1 must be moved between the *LC* circuit and L_1.

Circuit (b). The unwanted signal cannot be shorted to ground through L_1, and the wanted signal is shorted to ground through E_{cc}. L_1 must be moved and placed in series with E_{cc}.

Circuit (c). This circuit is correct and electrically identical to the series-fed circuit of Fig. 7(b).

Circuit (d). All signals are shorted to ground by E_{cc}. Not only is E_{cc} shorted out, but there is no d-c path to the grid. The *LC* circuit cannot short the unwanted signal to ground because of L_1. L_1 must be placed in series with E_{cc}, and C_1 must be moved so that it is between the *LC* circuit and the new position of L_1.

6 THE TUNED-PLATE TUNED-GRID AMPLIFIER . . . To achieve maximum selectivity, *LC* resonant circuits are simultaneously used in the grid and plate circuits of the amplifier. The result is called a tuned-plate tuned-grid amplifier, an example of which is shown in Fig. 9. This amplifier has a shunt-fed plate circuit and a series-fed grid circuit. You could just as well have a series-fed plate circuit or a shunt-fed grid circuit or any combination you like, since these circuits all perform the same electrical operation.

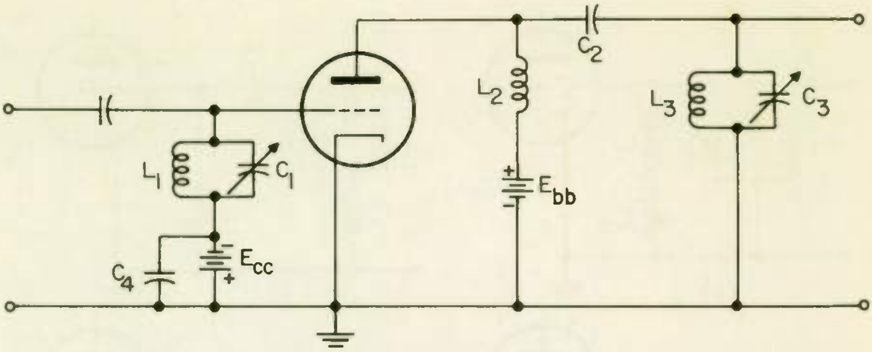

Fig. 9 A tuned-plate tuned-grid amplifier with series-fed grid circuit and shunt-fed plate circuit.

With both the input and output circuits tuned to the frequency to be amplified, maximum rejection of unwanted signals is obtained. These unwanted signals are now shorted at both the input and the output of the amplifier. In this way the amplifier is made sensitive only to the frequencies very near to the frequency to which the *LC* circuits are tuned. Tuned-Plate Tuned-Grid amplifiers are often called TPTG amplifiers for the sake of brevity.

Figure 9 and preceding figures have shown separate power supplies for E_{cc} and E_{bb}. While the use of separate power supplies for plate and bias voltages is common in transmitters and other high-power equipment, a single power supply is usually used in receivers and other low-power equipment. If cathode bias is used for the circuit of Fig. 9, thus eliminating E_{cc}, the circuit becomes that of Fig. 10. The bias provided by E_{cc} in Fig. 9 is now obtained from the voltage drop across R_1. Since E_{cc} is eliminated, there is no further need for C_4, which bypassed E_{cc}.

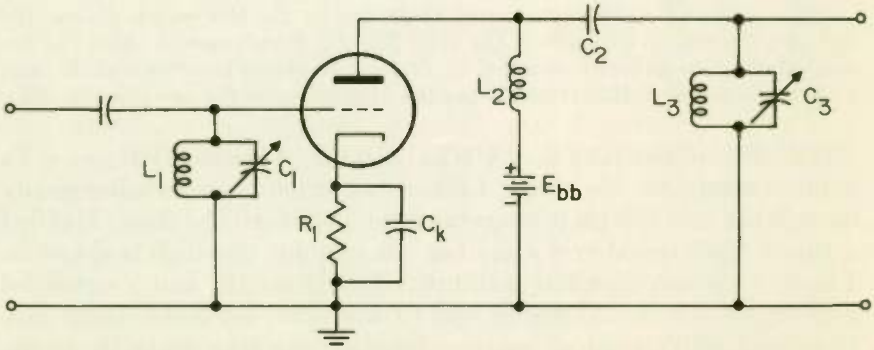

Fig. 10 The circuit of Fig. 9, but using cathode bias.

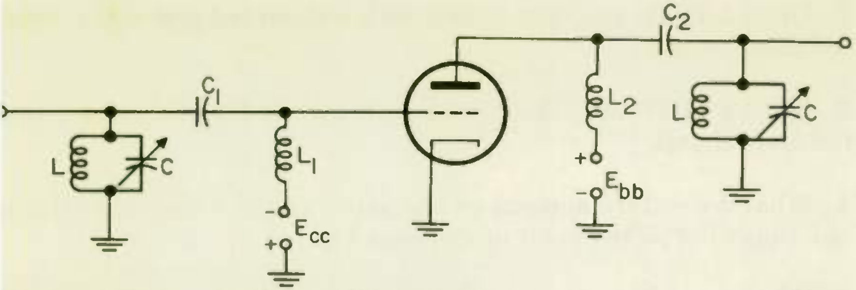

(a) Shunt-fed grid, shunt-fed plate

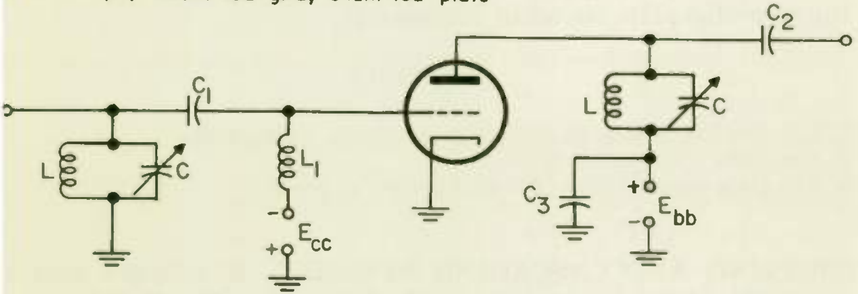

(b) Shunt-fed grid, series-fed plate

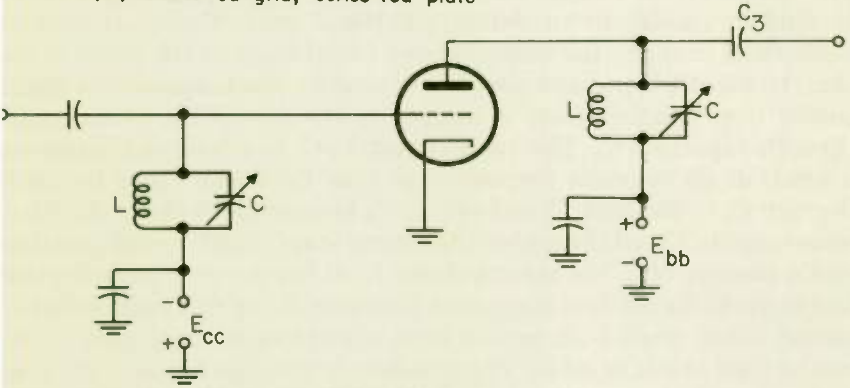

Fig. 11 (c) Series-fed grid, series-fed plate

In order to keep circuitry in this lesson as simple as possible to better illustrate basic amplifier principles, separate power supplies for bias and plate are generally shown. You should understand that in any of these circuits cathode bias or some other suitable biasing method can be substituted in place of E_{cc}, as is done in Fig. 10.

WHAT HAVE YOU LEARNED?

1. Draw a TPTG amplifier circuit with a shunt-fed grid and a shunt-fed plate circuit.

2. Draw a TPTG amplifier circuit with a shunt-fed grid and a series-fed plate circuit.

3. Draw a TPTG amplifier circuit with a series-fed grid and a series-fed plate circuit.

4. What d-c voltage appears on the plates of the tuning capacitor in the shunt-fed plate circuit of Problem 1?

5. What d-c voltage appears on the plates of the tuning capacitor in the series-fed plate circuit of Problem 2?

ANSWERS

1, 2, 3. See Fig. 11(a), (b), and (c), respectively, for answers.
4. Zero volts with respect to ground.
5. The plate supply voltage E_{bb} with respect to ground.

7 COUPLING AND CASCADING STAGES . . . If sufficient gain is not obtained from a single stage, two or more stages can be connected in tandem (cascaded) to obtain additional gain. There are various methods of coupling the output of one tuned stage to the input of the next. In Fig. 12, *capacitive* coupling is used for the purpose. The signal output from the first stage is coupled to the grid of the second stage through capacitor C_4. The tank circuit L_3-C_3 is a high impedance to a signal at its resonant frequency, so that the signal takes the path through C_4 to the grid. The capacitor C_4 is necessary to keep the plate power supply E_{bb} off the grid of the second stage, which would give that grid a positive bias. We show a choke L_1 as the d-c path between grid and cathode for the first stage, and a resistor R_2 for this purpose in the second stage. Since both have a high impedance to the signal, either can be used in either stage. The principle is that the d-c path between grid and cathode must have a high impedance to the signal, so that the signal won't short to ground through it.

Grid bias is obtained in Fig. 12 by the cathode resistor method, using R_1C_2 and R_3C_5 for the purpose. A separate bias voltage, as shown in previous figures of this lesson, could be used just as well.

A method of coupling two stages by *transformer* or *inductive coupling* is shown in Fig. 13. Coil L_2 is placed close to L_1, so that L_1 is the primary and L_2 the secondary of a transformer. The signal current flowing in L_1 is transferred to L_2 by transformer action, and thus reaches the grid of the following stage.

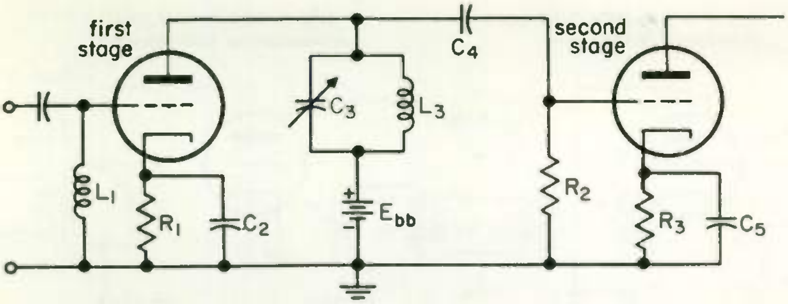

Fig. 12 Capacitor coupling between two stages.

Since L_1-C_1 is a parallel resonant circuit of high impedance, which in previous circuits of this lesson has been used to block the signal, it may seem to you that very little signal current will flow through L_1. While it is true that the signal current I_s entering the tank circuit is very low, the *circulating* signal current within the tank circuit that swishes back and forth between L_1 and C_1 will be high at resonance.

Since the signal current through L_1 is high at resonance, there is a good signal transferred from L_1 to L_2. For frequencies not at resonance, the current through L_1 will be much less and therefore little signal is transferred to the grid of the next stage. Because the impedance of L_1-C_1 will be much less for frequencies off of resonance, the signal current I_s will be more than at resonance. In spite of that, the signal current through L_1 will be less because it is only at resonance that the circulating current in L_1 and C_1 is many times greater than I_s.

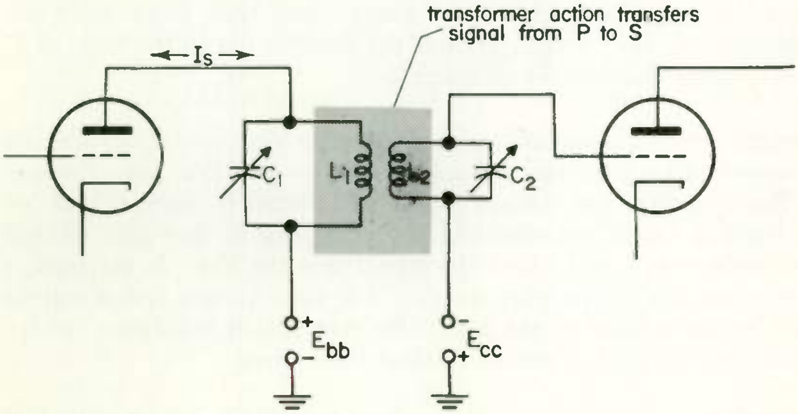

Fig. 13 Transformer coupling between tuned stages.

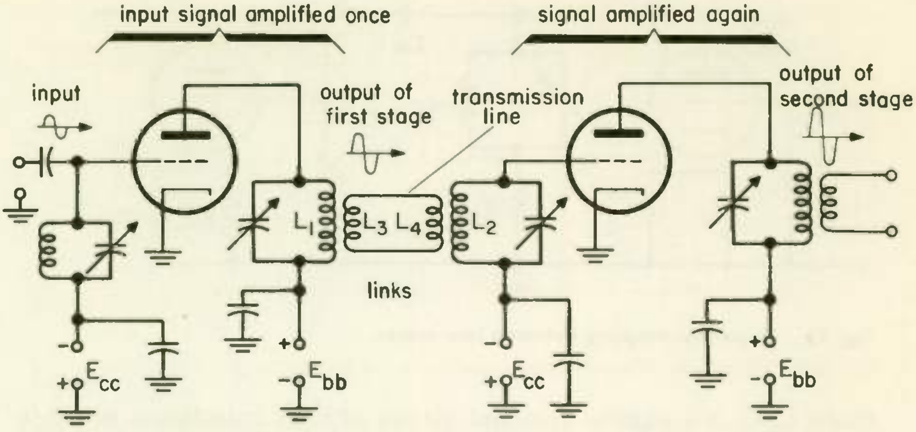

Fig. 14 Two TPTG amplifier stages in cascade, using link coupling.

Sometimes the equipment is so layed out that L_2 of Fig. 13 is at a distance from L_1. By a method called *link coupling,* shown in Fig. 14, L_2 can still be coupled to L_1. In this figure, L_1 couples the signal by transformer action to L_3. From L_3 it is conveyed by the transmission line to L_4. The signal current flowing in L_4 induces the signal into L_2.

8 TRANSISTOR TUNED-CIRCUIT COUPLING METHODS . . .

Methods of coupling transistor tuned stages differ in certain respects from the methods for vacuum tubes. Figure 14A shows a transformer coupling between two transistor stages. Winding L_4 differs from L_2 of Fig. 13 in that it consists of only a very few turns. L_3-L_4 is thus a voltage step-down transformer. Now a transformer that steps down the voltage steps up the current. Hence, the current fed to the base of T_2 is greater than the current through L_3.

Remember that a transistor is a *current* amplifying device. Hence, the more signal current fed to the base, the better the gain from the system. The fact that the voltage has been lowered is unimportant because the base input resistance of the transistor is very low, so that little voltage is needed to feed the signal into the base. In contrast, a tube is a *voltage* amplifying device. We want to get the strongest possible signal *voltage* to the grid. The grid circuit resistance is very high, so that very little signal current is required.

The signal current induced in L_4 must feed between base and emitter of T_2. C_4 and C_5 are sufficiently large to have low impedance at the signal

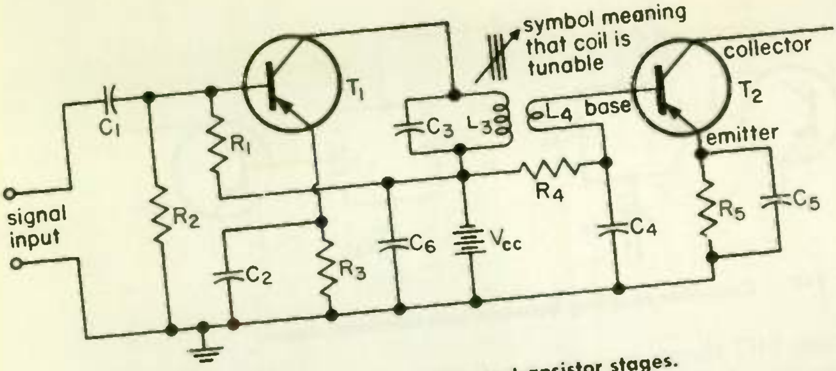

Fig. 14A Simple transformer coupler between transistor stages.

frequency, so that the L_4 current reaches the emitter by way of C_4 and C_5. The purpose of all other components in the circuit has been explained in a previous lesson. The C_3-L_3 tank circuit is tuned to the desired resonant frequency by varying the inductance of L_3, usually by means of a screw that varies the position of a ferrite of powdered-iron slug within the coil. Remember that there are two ways to change the resonant frequency of a tank circuit. The way we have usually shown in previous circuits is by varying *C*. The same results are obtained if you vary *L*. The latter method is apt to be used with transistors in order to save the space taken up by a variable capacitor.

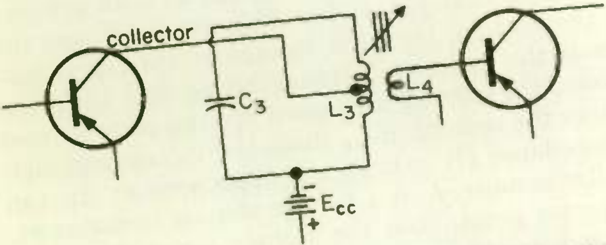

Fig. 14B Transistor coupling using tank circuit with tapped coil.

Figure 14B differs from Fig. 14A in that the collector connects to a tap on L_3. This reduces the tank circuit impedance as seen from the collector, resulting in better gain from the amplifier. You will seldom see the plate of a tube connected to a tap on the tank circuit. The plate resistance of a tube is high, and to match it properly to the tank circuit, the latter impedance should also be high. The collector resistance of a transistor is much lower than the plate resistance of a tube. A better match is obtained when the collector is tapped to a lower impedance point on the tank circuit than at the top. A match gives the strongest signal transfer to the base of the following stage.

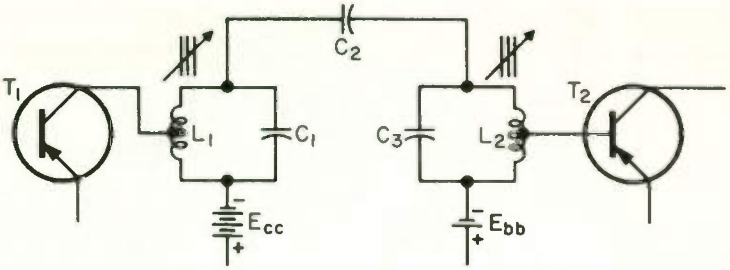

Fig. 14C **Capacitor coupling between two transistor stages.**

Figure 14C shows capacitor coupling between two transistor stages, by means of C_2. The signal output from T_1 is tapped on to L_1 at the point with the most satisfactory impedance match. Because the input to T_2 has a very low impedance, the base of T_2 is tapped at a very low point on L_2, where the impedance is also very low. This arrangement gives a much higher signal current to the base than if the base was tapped at some higher point or at the top.

The reason impedances are varied by changing tap positions is that a tapped coil is actually a transformer. While we usually think of a transformer as having two windings, a primary and a secondary, it need only have one winding. It is then called an *autotransformer*. Part of the single winding does double duty, acting as both primary and secondary turns. If, for example, L_2 has 50 turns in all, and the tap is 5 turns from the bottom, then the voltage at the tap is one-tenth the voltage across the entire coil. Remembering that when the voltage is stepped down, the current is stepped up, the current from the tap will be ten times the current in L_2. Since low voltage and high current means low impedance (R =E/I), the impedance at the tap point is low. In a similar manner, L_1 is a voltage step-up transformer. If the tap is at the center point, then the voltage across the entire coil is twice the voltage between center tap and bottom, and the coil current one-half the collector current.

WHAT HAVE YOU LEARNED?

1. Draw a TPTG amplifier with a capacitance coupled input circuit which is parallel fed and a transformer-coupled output circuit which is series fed.

2. If you apply a 0.1-volt input signal to the input of the first amplifier in Fig. 13, the voltage appearing at the grid of the second tube will be (a) __________ volts if the gain of the first amplifier is 10. If the gain of the second amplifier is also 10, the voltage at the output of

the second amplifier will be (b) ________ volts. By what factor has the input signal been amplified by the two amplifiers working together? (c) ________ .

ANSWERS

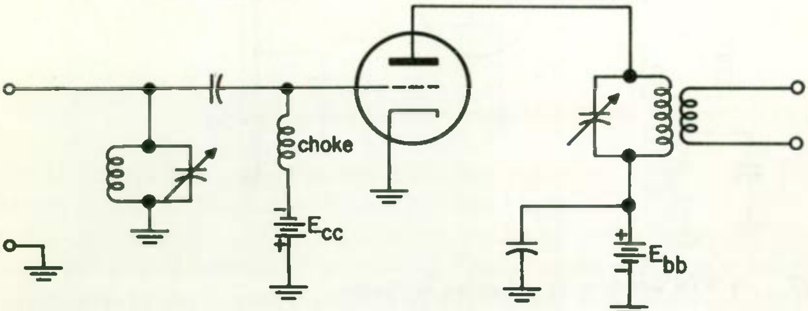

Fig. 15

2. (a) 1 volt . . . 0.1 volt input × gain of 10.
   (b) 10 volts . . . 1 volt input to second amplifier × gain of 10.
   (c) 100 . . . The gain of the total combination = $E_{out} \div E_{in} = 10 \div 0.1 = 100$.

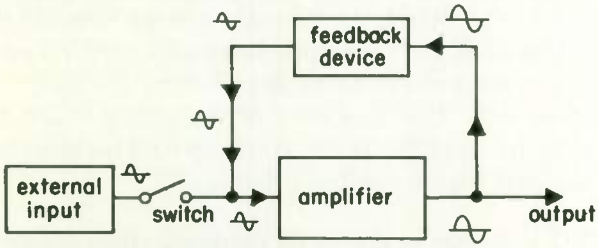

Fig. 16 The principle of feedback.

OSCILLATORS

9 THE PRINCIPLE OF THE OSCILLATOR . . . An oscillator is a device which generates an a-c voltage at some particular frequency. At very low frequencies (the 60-cycle voltage in your home, for example) sinusoidal voltages can be generated by mechanical generators; but at the much higher frequencies required for radio work no mechanical generator can work fast enough, so that oscillators using vacuum tubes or transistors must be used.

The idea behind an oscillator is very simple; it is illustrated in Fig. 16. You have seen how it is possible to have an amplifier which will amplify one particular frequency quite well. If an external signal is applied to the input of the amplifier by closing the switch, a large

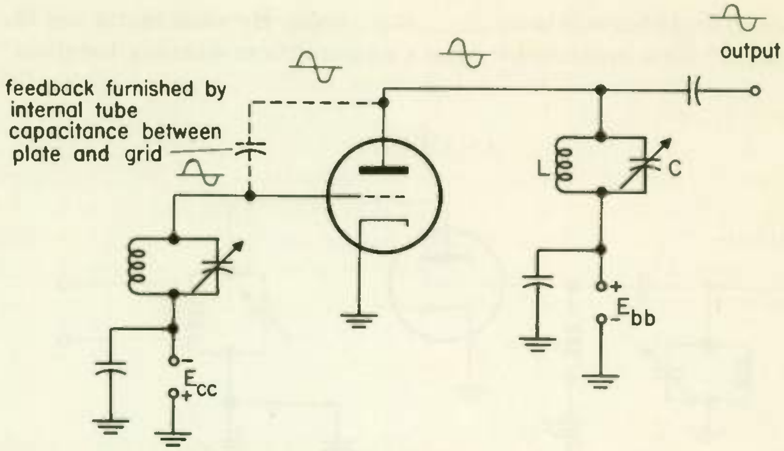

Fig. 17 **A TPTG amplifier in use as an oscillator.**

amplified output signal will appear at the output terminals. If some of this output signal is now "fed back" to the input terminals by a *feedback device* of some kind, this fed-back voltage can be used to supply the input of the amplifier and the external input voltage can be disconnected by opening the switch. In this way a large sinusoidal output voltage can be produced at the output terminals with no external input voltage, the input voltage being supplied by the output voltage itself through feedback. The frequency of the output voltage is the frequency to which the amplifier is tuned. Almost all oscillators are of this form—an amplifier with a feedback device.

Figure 17 shows a TPTG amplifier in use as an oscillator. In this case the output voltage from the plate is fed back to the grid through the internal capacitance between the plate and grid of the vacuum tube. Although this capacitance is very small, it is sufficient to feed back enough voltage to drive the amplifier as an oscillator. No external input signal is needed to start the oscillator, because there are always some tiny stray noise voltages produced by the moving electrons in the tube. These noise signals are magnified in amplitude by the tube and fed back to the input to provide the input signal needed to start oscillations.

WHAT HAVE YOU LEARNED?

1. An oscillator can be made from an amplifier by supplying the input of the amplifier with a signal taken from the (a) ______________ of the amplifier. The portion of the circuit which takes part of the output and applies it to the input is called a (b) ______________ device.

2. Is the TPTG oscillator shown in Fig. 17 any different from the circuits for TPTG amplifier which you have been studying so far? (a) ________ . Can a TPTG circuit which oscillates be used to amplify an input signal? (b) ________ .

3. You have probably heard the squeal produced by a public address system when the output of the speaker is brought too close to the microphone. Some of the output of the speaker is then being fed back to the input of the amplifier. Since there is an amplifier present with feedback, you could classify the squeal of the amplifier as ________ .

ANSWERS

1. (a) Output; (b) feedback
2. (a) No . . . The basic circuit for an oscillator is identical to that of the amplifier. However, when the circuit is used as an amplifier, special precautions must be taken to prevent feedback through the internal tube capacitance.
   (b) No . . . A signal is always present at the output of an oscillator regardless of any input signal.
3. Oscillation . . . The circuit oscillates at an audio frequency, so you hear the output as a squeal with a pitch equal to the oscillation frequency.

10 PREVENTING OSCILLATION . . . When a TPTG circuit is to be used as an amplifier, some care must be taken to prevent it from oscillating. A TPTG circuit which oscillates cannot be used simultaneously as an amplifier because a signal is always present at the output of an operating oscillator.

The easiest way to prevent oscillation is to remove the internal capacitance between plate and grid and thereby remove the source of feedback for the oscillator. Pentode and tetrode vacuum tubes have an extremely small internal capacitance because of the addition of the screen grid between the plate and the grid of the tube.

Figure 18 shows a TPTG amplifier circuit using a tetrode. Voltage is supplied to the screen grid through the screen dropping resistor R_s. Since the screen must be kept at a positive potential (less than the plate supply voltage E_{bb}), it will draw current. The screen current I_s then causes a voltage drop across R_s, and the voltage on the screen is E_{bb} minus the drop across R_s. No a-c voltage must appear on the screen while the circuit is in operation, so a bypass capacitor C_s is provided to short any a-c on the screen to ground.

WHAT HAVE YOU LEARNED?

1. If in Fig. 18 the value of the plate supply voltage E_{bb} is 300 volts

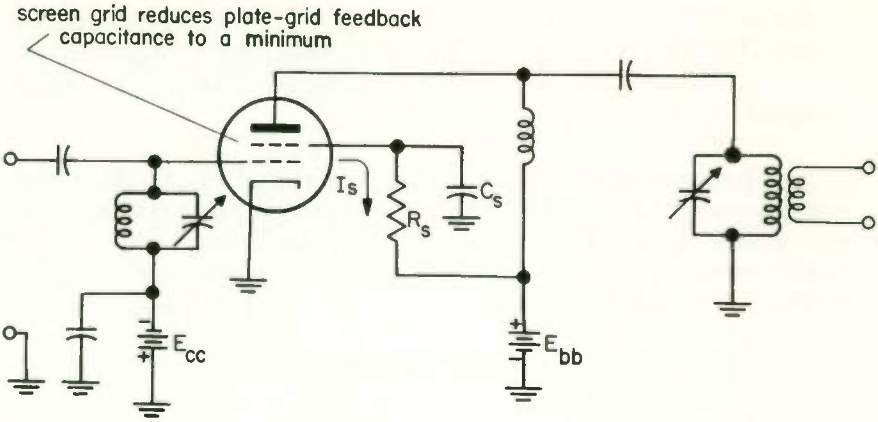

Fig. 18 A TPTG amplifier using a tetrode tube.

and the screen draws a current of 5 ma, the value of R_s necessary to produce a voltage of 250 volts between the screen grid and ground is ______ kilohms.

2. What is the purpose of the screen bypass capacitor C_s in Fig. 18? (a) ______________________________ . What would happen if this capacitor were shorted to ground? (b) ______________________________ .

3. Redraw Fig. 18 using cathode bias to eliminate E_{cc}.

ANSWERS

1. 10 . . . 300 volts − 250 volts = 50 volts which must be dropped across R_s.

$$R_s = \frac{50 \text{ volts}}{5 \text{ ma}} = 10 \text{ kilohms}$$

2. (a) C_s shorts any a-c which appears on the screen grid to ground.
(b) The d-c voltage on the screen grid would be shorted to ground. In most tubes this would cut off the flow of plate current.

3.

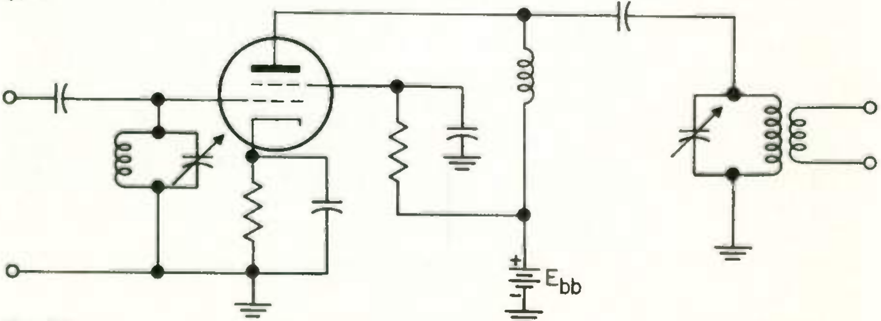

Fig. 19

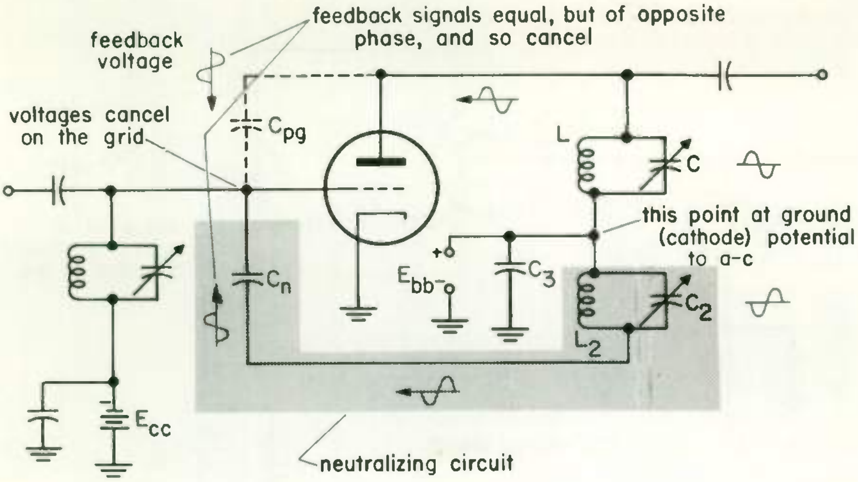

Fig. 20 Plate neutralization of a TPTG amplifier. The a-c ground is at the bottom of tank circuit *LC* and at the top of L_2C_2. Therefore, the signal in L_2C_2 is 180° out of phase with the *LC* signal with respect to ground or cathode.

11 NEUTRALIZATION . . . Even with the use of a screen grid, some tubes still tend to oscillate in high-gain amplifiers. In these cases and in the cases when the tube has no screen grid another measure must be taken to prevent oscillation. The amplifier circuit must be so constructed that the voltage fed back to the grid can be canceled out. The operation of canceling out the feedback voltage is called *neutralizing the amplifier*.

Transmitter and other high-power amplifiers require neutralization. A voltage which is 180° out of phase with the feedback voltage (the exact negative of the feedback voltage) must be obtained and applied to the grid of the tube to cancel the feedback voltage and produce neutralization. One method of neutralization of this kind is shown in Fig. 20. Here another tank circuit is so arranged that the transformer action between the plate tank inductor L and the tank inductor L_2 induces a voltage in the tank circuit of L_2 which is 180° out of phase with the output voltage. This induced voltage is then fed to the grid through the neutralizing capacitor C_n. The voltage fed to the grid through C_n is then 180° out of phase with the feedback voltage supplied to the grid through the plate grid capacitance C_{pg} and the two voltages cancel, thereby eliminating oscillation.

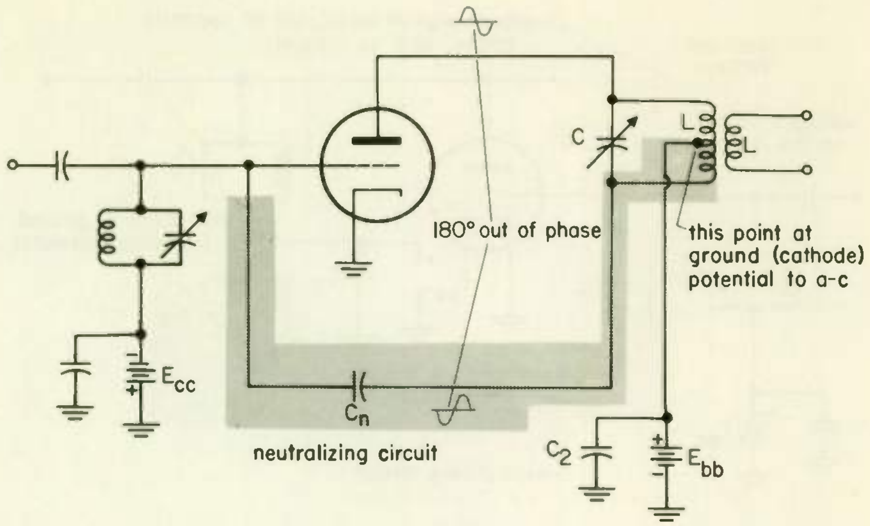

Fig. 21 Use of a single tank in the output circuit of the neutralized amplifier. Note that C_n and plate connect to opposite sides of the cathode potential point on *L*. This is necessary to obtain the proper phase.

The voltage which is fed back through C_{pg} is in phase with the input voltage and is called a *positive,* or *regenerative feedback voltage.* The voltage which is fed back to the grid through the neutralizing capacitor C_n is 180° out of phase with the output voltage and is called *negative,* or *degenerative, feedback.* Most neutralizing circuits work on the same principle: Positive feedback tends to make the amplifier oscillate, while negative fedback prevents oscillation by canceling the positive feedback.

In any practical amplifier two coupled tank circuits as shown in Fig. 20 are seldom used. Instead, the two tank circuits are combined into one as illustrated in Fig. 21. The one tank circuit of this figure, with a center-tapped inductor, is electrically equivalent to the two separate coupled tanks.

The method of neutralization of Fig. 21 is called *plate neutralization,* since the neutralizing voltage is obtained from the plate circuit. The neutralization circuit shown in Fig. 22 is called a *grid neutralization circuit.* In this circuit a voltage is taken directly from the plate circuit but is fed to the lower end of the center-tapped tank (equivalent to two coupled tanks) in the grid circuit. This voltage then induces a voltage 180° out of phase with the feedback voltage in the grid circuit and thereby produces neutralization.

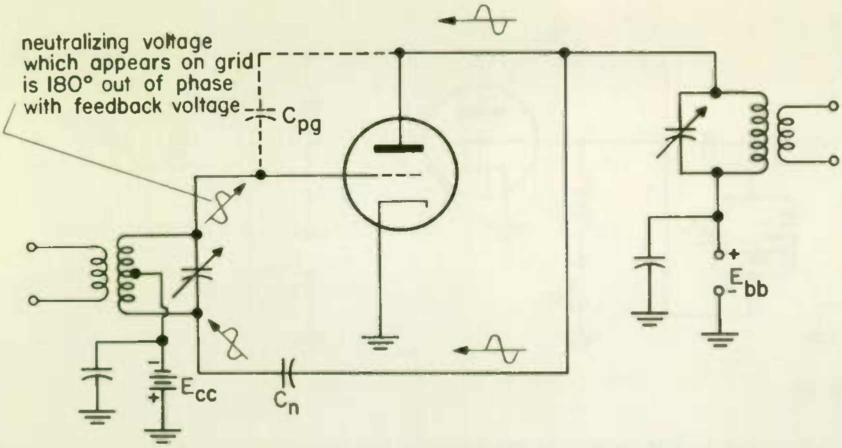

Fig. 22 **Grid neutralization of a TPTG amplifier.**

WHAT HAVE YOU LEARNED?

1. Neutralization is achieved by feeding back to the grid a voltage which is (a) ________ degrees out of phase with the feedback voltage causing oscillation. This means that the neutralizing voltage is the negative of the (b) *(regenerative) (degenerative)* feedback voltage. In the circuit of Fig. 20, if the internal capacitance between plate and grid is 10 pf, what would you expect the value of the neutralizing capacitor C_n to be? Why? (c) ____

____.

2. Draw a TPTG amplifier using a triode tube having a shunt-fed plate and a shunt-fed grid circuit using grid neutralization.

3. In Fig. 21, why is the point on L to which $+E_{bb}$ is connected at ground a-c potential?

ANSWERS

1. (a) 180 (b) regenerative (c) Also 10 pf. If the neutralizing voltage is to exactly cancel the feedback voltage, it must have the same amplitude as the feedback voltage. Thus the neutralizing voltage must see the same path to the grid circuit as the feedback voltage.

2.

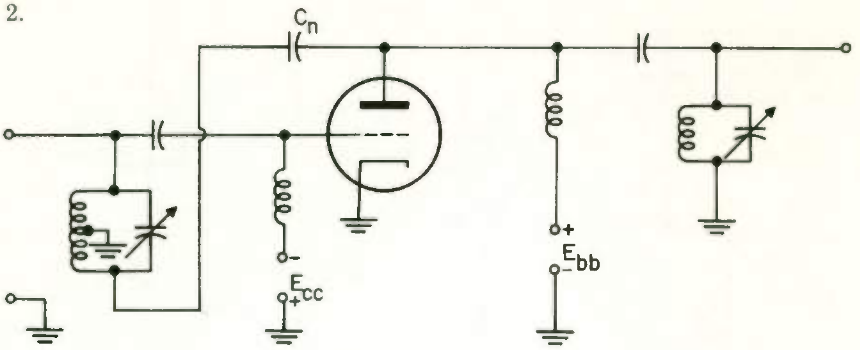

Fig. 24

3. Capacitor C_2 has negligible reactance at the frequencies used, and it therefore effectively shorts a-c to ground while blocking d-c.

AMPLIFIERS

12

THE GRID-VOLTAGE PLATE-CURRENT CURVE . . . The amount of plate current which flows in a vacuum tube is determined primarily by the value of the total voltage which appears between the grid and cathode of the tube. The voltage from grid to cathode determines to what extent the grid repels the electrons emitted by the cathode, and in this way it determines how much current can flow through the tube to the output circuit.

The curve of Fig. 25 shows how the voltage from grid to cathode affects the plate current of a vacuum-tube amplifier. This curve shows the readings of a milliammeter in the plate circuit plotted against the readings of a meter connected between the grid and cathode of the tube. When the voltage e_g from grid to cathode has a very large negative value of, say -50 volts, we are at point *A* of the curve. At this point the grid of the tube is so negative that it repels all the electrons emitted by the cathode, and no plate current whatsoever flows through the tube.

No plate current flows until we decrease the voltage from grid to cathode so that it is about -30 volts, which corresponds to point *B* on the graph. At this point the grid is just barely negative enough to repel all the electrons from the cathode and cut off the plate current i_p. When the grid-cathode voltage is less than the value at point *B,* the grid is no longer able to repel all the electrons from the cathode—

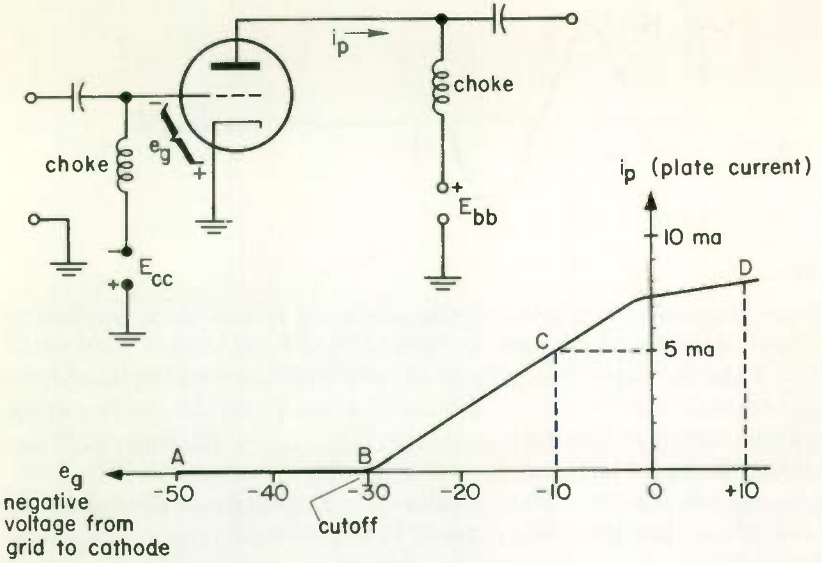

Fig. 25 **The grid-voltage plate-current curve.**

some of them get by and a plate current results. For example, at point *C,* where the grid-cathode voltage is −10 volts, plate current flows. The curve tells you that at −10 volts the current in the plate circuit is 5 ma.

The value of negative grid-cathode voltage at which plate current just begins to flow (point *B*) is called the *cutoff voltage* of the tube, since making the grid more negative than this value cuts off the plate current. When the grid is made positive with respect to the cathode as at point *D,* plate current flows and, in addition, the grid also starts drawing current from the cathode because the positive grid begins to attract the negative electrons.

WHAT HAVE YOU LEARNED?

1. Using the curve of Fig. 25, answer the following questions:

When the grid bias voltage is −40 volts, (a) ____________ milliamperes flows in the plate circuit. When the grid bias voltage is −20 volts, (b) _________ milliamperes flows in the plate circuit. When an a-c input signal is applied to the input terminals, the total voltage from grid to cathode is equal to the negative bias voltage E_{cc} plus the a-c input

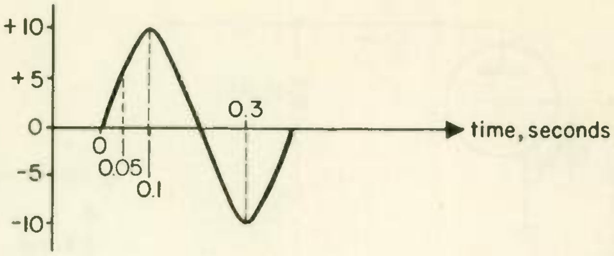

Fig. 26

voltage. Suppose the a-c input signal shown in Fig. 26 is applied to the input of the amplifier and the bias voltage E_{cc} is kept at -10 volts. At $t = 0$ the a-c input has a value of zero, and the total voltage from grid to cathode is then $-10 + 0 = -10$ volts. From the curve you see the plate current at this time is then (c) ________ milliamperes. When $t = 0.05$, the value of the a-c input is 5 volts. The total voltage from grid to cathode is then $-10 + 5$ volts $= -5$ volts. From the curve you can tell, then, that the plate current at $t = 0.05$ sec is (d) _______ milliamperes. What is the value of plate current at $t = 0.1$ sec? (e) ________ What is the value of plate current at $t = 0.3$ sec? (f) ________.

Notice that the input signal is actually producing a 10-volt fluctuation about the d-c bias level of -10 volts, which in turn is producing a plate current fluctuation of 2.5 ma about the 5-ma d-c level produced by the bias.

ANSWERS

1. (a) 0; (b) 2.5; (c) 5 ma; (d) 6.25 ma; (e) 7.5 ma; (f) 2.5 ma

13 THE CLASS A AMPLIFIER . . . Figure 27 shows the operation of an amplifier. The total voltage from grid to cathode is the a-c input signal voltage plus the d-c negative grid bias voltage E_{cc}. The *class of operation* of an amplifier depends on what value is chosen for E_{cc}. In *class A* operation E_{cc} is chosen as indicated on the curve, directly under the center of the linear, or straight, portion of the curve.

With no input signal the plate draws a constant d-c plate current. In Fig. 27 E_{cc} is -10 volts, so that the no signal d-c plate current is 5 ma. When the signal is applied to the input terminals, the signal adds to the bias voltage, and the voltage from grid to cathode varies as shown on the curve of Fig. 27. On this diagram an input voltage of value 2 volts peak is shown producing a fluctuation about the bias voltage E_{cc}. for example, 0.001 sec after the input is applied, the input voltage has risen to its maximum value of 2 volts. The total voltage on the grid is now 2 volts -10 volts $= -8$ volts bias. On the curve you see the plate current then rises to 6 ma. Because the curve is very

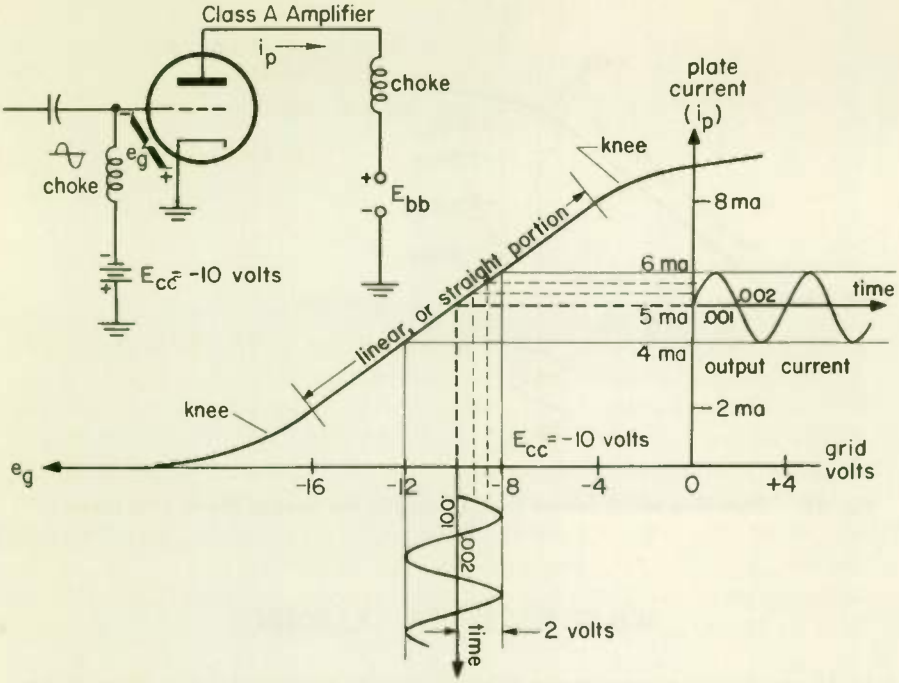

Fig. 27 A 2-volt a-c input signal produces a fluctuation about E_{cc} = —10 volts which produces a fluctuation in i_p.

nearly a straight line near the bias value E_{cc}, the plate current will be an exact reproduction of the input voltage waveform.

In this kind of diagram you can think of the input voltage as being reflected up off the curve, producing the plate current as shown in Fig. 27. Note that if the plate-current grid-voltage curve were not a straight line near E_{cc}, the output current would not resemble the input voltage so closely and serious distortion would occur. Such a case is shown in Fig. 28, where E_{cc} is chosen as -3 volts in the knee or curved portion of the curve.

Take careful note of the fact that in class A operation the total voltage from grid to cathode is always negative, that is, the peak value of the input signal must always be less than value of the bias voltage E_{cc}. You could not, for instance, apply an input signal having a peak value of 10 volts to the amplifier we have been discussing. If you did, the input signal would drive the grid into the knee of the curve and distortion would result.

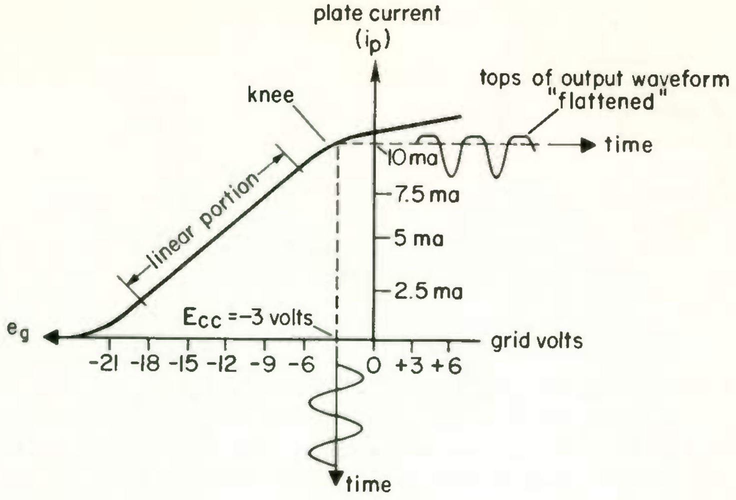

Fig. 28 **Distortion which results from biasing in the knee of the e_g — i_p curve.**

WHAT HAVE YOU LEARNED?

1. If you put a square wave into the input terminals of a class A amplifier, the voltage which appears at the output terminals will be a (a) ____________ wave because a class A amplifier (b) *(does) (does not)* reproduce the input signal.

2. The class A amplifier is so biased that the operating point is in the ____________ of the linear portion of the E_g-I_p curve.

3. Referring to Fig. 27, the maximum peak input voltage which you can apply to the input of the amplifier without forcing the grid-cathode voltage into the lower knee of the curve is (a) ______ volts. Applying a voltage greater than this value will result in a (b) *(distorted) (undistorted)* output.

4. In Fig. 27 the a-c output current fluctuates about the d-c level of (a) ______ milliamperes. It rises to a value of (b) ______ milliamperes on positive peaks and falls to a value of (c) _________ milliamperes. On the average, what would you say the plate current of the tube is? (d) ______ milliamperes.

5. If the voltage from grid to cathode is always negative in class A operation, can any current ever flow from the cathode through the tube and out of the grid? (Consider the grid-cathode portion of the tube as a vacuum-tube diode.)

ANSWERS

1. (a) Square wave; (d) does
2. Center
3. (a) 6 volts; (b) distorted
4. (a) 5 ma; (b) 6 ma; (c) 4 ma
   (d) 5 ma . . . This is the d-c level about which the fluctuations are taking place.
5. No . . . The situation corresponds to a reverse-biased diode with a negative voltage on its anode.

14 CHARACTERISTICS OF THE CLASS A AMPLIFIER . . . A Class A amplifier is valuable because the output waveform is an exact reproduction of the input voltage waveform. Thus it can be used in such applications as a high-fidelity amplifier, in which no distortion is wanted. In the preceding topic you saw the following characteristics of a tube operated in class A:

1. The tube is always biased with a negative voltage in the center of the linear or straight portion of the plate-current grid-voltage curve so as to give a distortionless output.
2. The input signal must never be so large as to drive the grid positive or force it into the knee of the plate-current grid-voltage curve, because distortion would result.
3. Because of the way the tube is biased, the tube draws a constant d-c plate current with no signal applied.

Since the grid is always kept at a negative voltage with respect to the cathode, the grid never draws any current in class A operation. In other words, negligible current is drawn from the input signal source, since only a voltage is necessary to drive the grid of the tube. The input power, which is the product of the input voltage and current, is then small for a class A amplifier.

When no signal is applied to such an amplifier, a fairly large d-c plate current flows through the tube. The product of this current and the voltage across the tube gives the amount of power which E_{bb} is supplying to the tube in the form of heat. When a signal is applied to the input, the plate current rises and falls about this d-c level. Although the plate current is rising and falling, on the average, it is constant at this d-c value. For example, the plate current in Fig. 27 rises to 6 ma and falls to 4 ma, but on the average it has a value of 5 ma, which is just the no-signal d-c plate current.

Thus, when an a-c input signal is applied to a class A amplifier, the average value of d-c plate current does not change. The power sup-

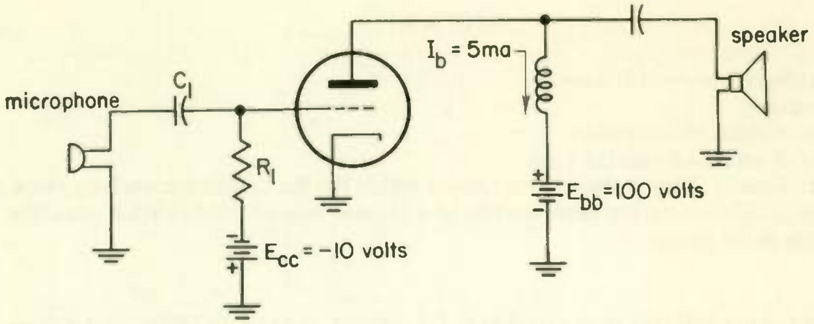

Fig. 29

plied to the tube in heat due to the d-c plate current is always dissipated whether the input signal is applied or not. Because of this large amount of power lost in heat, the class A amplifier is highly inefficient. Normally the efficiency of a class A amplifier is between 20 and 35 per cent.

WHAT HAVE YOU LEARNED?

1. Figure 29 shows a class A audio amplifier with microphone input and speaker output. Can any a-c microphone current flow to ground through C_1 and the grid-cathode portion of the tube? Why? (a) ______ ______________________________. The only current which is drawn out of the microphone is the small value of current that leaks off across the high impedance of (b) ________. The no-signal d-c plate current is 5 ma, and the plate supply voltage is 100 volts. The power dissipated in the tube in heat due to the d-c plate current level is (c) ______ watt with no signal applied. If a signal is now applied, is this power still lost in heat? (d) ______________ ______________________________

What will a d-c milliammeter in series with E_{bb} read if an input signal of 0.01 volt is applied by the microphone? (e) __________ milliamperes. The formula for plate efficiency is a-c power output divided by d-c power input. What is the efficiency of this amplifier if 0.1 watt of a-c power is delivered to the speaker? (f) ________ per cent.

2. What would happen if resonant tank circuits were added to the amplifier operating in Fig. 29?

ANSWERS

1. (a) The grid is always negative in class A operation, so no grid current can ever flow.

(b) R_1; (c) 0.5 watt = $E_p \times I_p$

(d) Not all of it; part of the 0.5 watt is now converted to a-c signal power, and is delivered to the speaker.

(e) 5 ma . . . The average value of d-c plate current does not change when you apply an input signal.

(f) 20 per cent . . . $0.1 \div 0.5 = 0.20$.

2. The amplifier would become selective and only one frequency of the microphone output would be amplified.

15 THE CLASS B AMPLIFIER . . . In order to make an amplifier more efficient than a class A amplifier, you must somehow remove the power lost due to the constant average d-c plate current. In a class B amplifier the constant d-c plate current is completely removed by biasing the tube at cutoff as shown in Fig. 30. Now when no signal is applied, the tube will draw no current and the efficiency is thereby raised. Unfortunately, as you can see, if a small input signal *is* applied, the negative portion of the output current is completely cut off and only one half of the input waveform is reproduced. Also, distortion results because the grid is driven into the knee or nonlinear portion of the curve.

To get around the first difficulty, we simply employ two tubes in what is called a push-pull circuit. Both these tubes are biased at cutoff; one tube amplifies the upper portion of the input signal and the other tube amplifies the lower portion.

A common push-pull circuit for class B operation is shown in Fig. 31. Transformers are used in both input and output circuits to separate

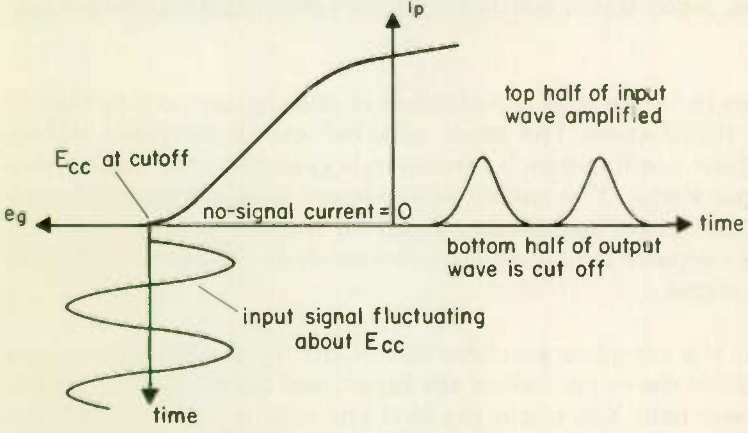

Fig. 30 The no-signal plate current is removed by biasing at cutoff in a class B amplifier.

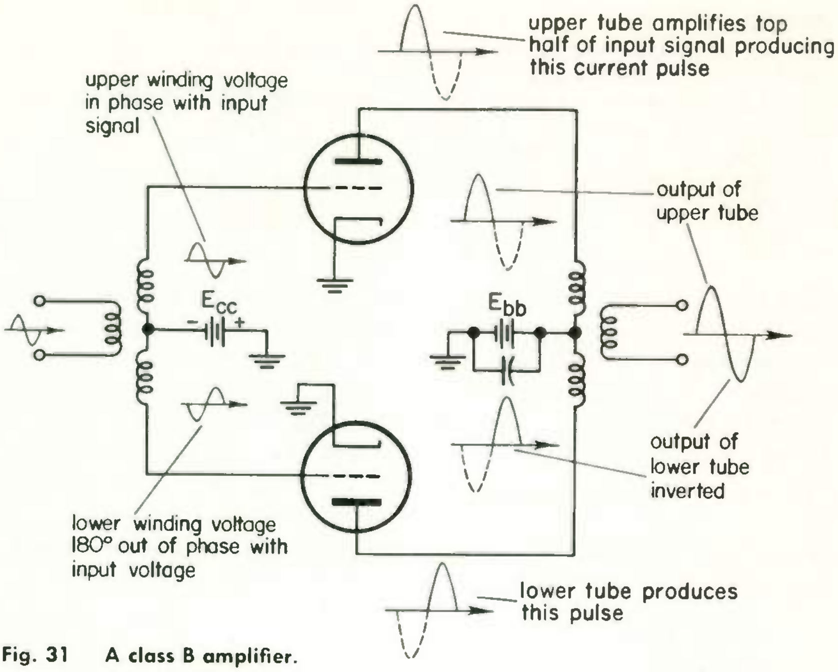

Fig. 31 A class B amplifier.

and add the upper and lower portions of the input signal for amplification. Consider the transformer at the input of the amplifier. The signal to be amplified is applied to the winding on the left. It induces a voltage just like itself in the upper secondary winding, and in the lower winding it induces a voltage which is inverted or turned upside down (180° out of phase). The upper tube then amplifies the top portion of the input signal, while the lower tube amplifies the bottom portion.

The action in the output transformer is exactly opposite to that of the input transformer. The upper tube induces an amplified voltage in the output winding which corresponds exactly to the top portion of the input signal. The output of the lower tube is inverted by the action of the output transformer so that it induces an amplified voltage in the output winding which corresponds to the lower portion of the input signal.

The result is a complete amplification of the input signal: the upper tube amplifies the upper half of the input, and the lower tube amplifies the lower half. You might say that one tube is pushing while the other tube is pulling. The push-pull amplifier can be made selective by using the inductance of the input and output transformers in com-

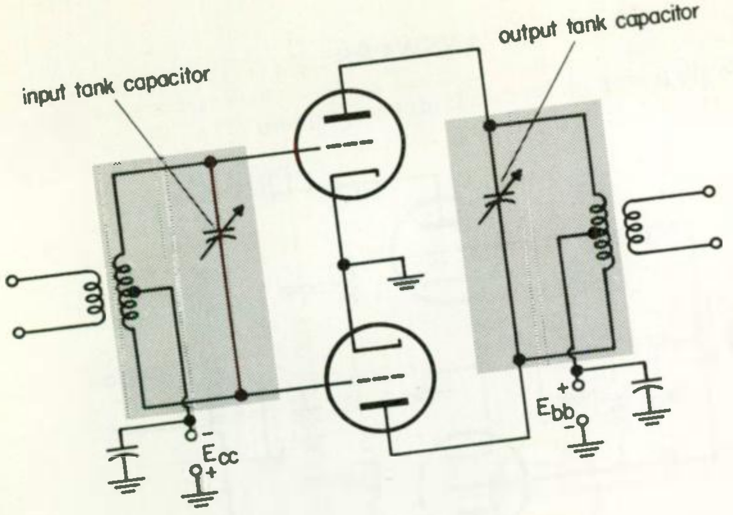

Fig. 32 A selective class B amplifier.

bination with capacitors to produce resonant tank circuits as shown in Fig. 32.

WHAT HAVE YOU LEARNED?

1. If a class B amplifier is to be used to produce an amplified reproduction of an input signal, (a) *(one) (two)* tubes must always be used in a (b) ________ circuit. A tube is said to operating class B when it is biased at (c) ________. Some distortion always results in class B operation because the grid voltage must lie in the lower (d) ________ of the E_g-I_p curve over a portion of the input cycle. The no-signal d-c plate current in class B operation is (e) ________.

2. Draw a nonselective push-pull class B amplifier having series-fed plate and grid circuits.

3. Draw a nonselective push-pull amplifier with parallel-fed plate and grid circuits. Remember you must furnish plate voltage and grid bias to both tubes. Check the a-c and d-c paths to make sure your circuit is electrically equivalent to the circuit of Fig. 31.

4. In a class B push-pull circuit each tube conducts during one half of one cycle of the input voltage because each tube is amplifying one-half of the input signal. This means that each tube conducts during ________ degrees of one cycle of the input signal in class B operation

1. (a) Two; (b) push-pull; (c) cutoff; (d) knee; (e) zero
2. See Fig. 31.
3.

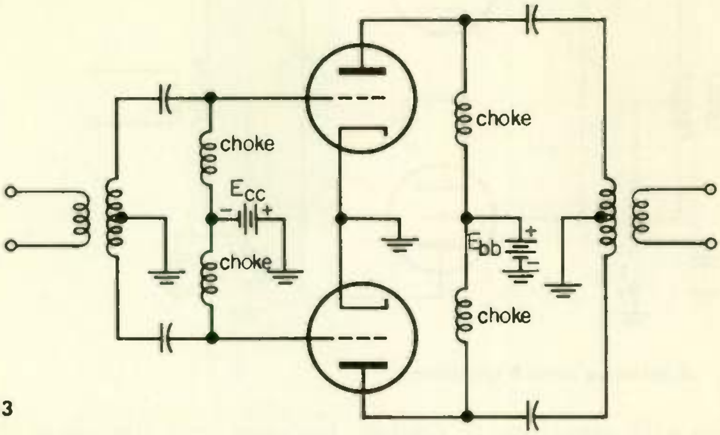

Fig. 33

4. 180°

16 CHARACTERISTICS OF THE CLASS B AMPLIFIER

... The common class B amplifier consists of two tubes, both biased at cutoff, operating in a push-pull circuit. In the preceding topic you learned of the following characteristics of tubes operating in class B:

1. The tubes are always biased at cutoff, and each tube amplifies one half of the input signal.
2. Some distortion results because the grids of both tubes must be driven in to the knee of the plate-current grid-voltage curve.
3. Because of the way the tubes are biased, the output signal does not fluctuate about a constant d-c plate current. Therefore, a class B amplifier is much more efficient than a class A amplifier which has heat losses that are due to the constant average d-c plate current level.

Since distortion cannot be avoided in a class B amplifier, it is common practice to drive the amplifier as hard as possible to obtain maximum efficiency. The input signal is made so large as to actually drive the grids positive during a small portion of a cycle. A typical plate-current grid-voltage curve for the class B amplifier is given in Fig. 34. The tubes are biased at cutoff, where $E_{cc} = -10$ volts. The input signal in this case has a peak value of 11 volts, which is greater than E_{cc}. (Note that this could never be the case for a class A amplifier.) Now, 0.001 sec after the input is applied, the total voltage from grid to

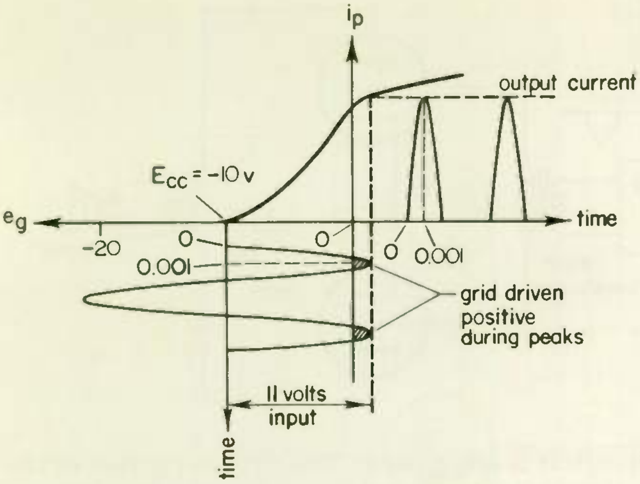

Fig. 34 In class B_2 operation the grid is driven positive during peaks.

cathode is 11 − 10 = +1 volt. The grid is then positive with respect to the cathode and draws current.

It is useful to distinguish between modes of operation in which the grid draws currents and those in which the grid does not. For this purpose the subscripts 1 and 2 are used after the letter denoting the class of operation. The subscript 2 means the grid draws current, and the subscript 1 means that it does not. Thus in class B_1 operation the grid does not draw current, while in class B_2 operation the grid is driven harder so that it does draw current.

Since in class B_2 opeation current is drawn by the grid for a small period of one cycle of the input signal, the input signal source must supply some current as well as voltage to drive the amplifier. Because the grid draws current in a class B_2 amplifier, *a class B_2 amplifier requires considerably more driving power than a class A amplifier,* the grid of which draws negligible current.

Class B amplifiers have application where high efficiency and high output power are required and where some small distortion can be tolerated. An example is the output stage of a public address system amplifier. Typical efficiencies for a class B amplifier range between 50 and 60 per cent.

Class B amplifiers are used in transmitters to amplify modulated r-f signals. Because tuned tank circuits are used, push-pull operation is

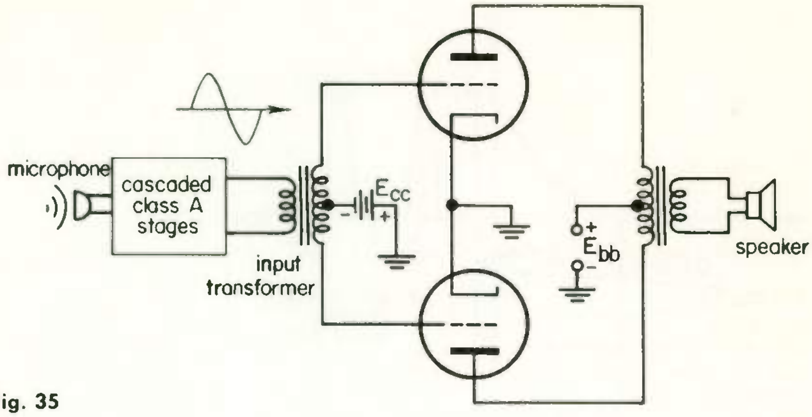

Fig. 35

not required, although it is often used. The flywheel action of the tank circuit fills in the missing part of the signal caused by plate current cutting off during half of the cycle. This will be explained shortly in connection with class C operation. For this use distortion can be kept low.

WHAT HAVE YOU LEARNED?

1. Figure 35 shows a class B push-pull amplifier used as a final stage in a public address system. The output of the microphone must first be amplified by several cascaded class A stages. It cannot be directly applied to the input of the class B amplifier because a class B amplifier requires considerably (a) *(more) (less)* driving power than a class A amplifier. This increased driving power is required because, at the peaks of the input signal, current will flow in the input circuit through the input transformer and the (b) ________________ portion of the tubes. If you do not speak into the microphone, how much current will a d-c milliammeter in series with E_{bb} read? (c) __________. A sinusoidal input signal is shown entering the amplifier. The upper tube conducts during (d) _______ degrees of one cycle of this input signal, while the lower tube conducts during (e) _______ degrees of one cycle of the input signal. This push-pull class B amplifier could probably deliver 20 watts of audio to the speaker with some small distortion; compare this with the class A audio stage of Fig. 29 which delivers 0.1 watt of distortionless output.

ANSWERS

1. (a) More; (b) grid-cathode

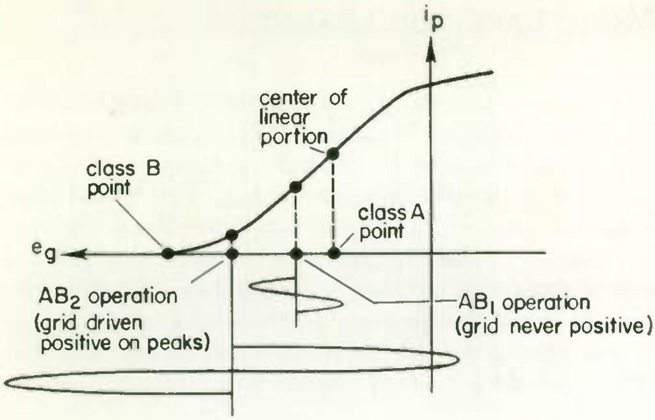

Fig. 36 **AB_1 and AB_2 operating points are in between cutoff and the center of the linear portion of the curve.**

(c) Zero . . . Since the tubes are biased at cut off, no plate current flows under no-signal conditions.

(d) 180°, or one half of the input cycle; (e) 180°, or one half of the input cycle

17 THE CLASS AB AMPLIFIER . . . In a class A amplifier the grid is biased exactly in the center of the linear portion of the plate-current grid-voltage curve. The result is low distortion and low efficiency. In a class B amplifier, the grids of the tubes used are biased all the way at cutoff with resulting high efficiency but also some distortion.

It is possible to bias two tubes in push-pull somewhere between the class B and class A bias points. Such amplifiers are called class AB amplifiers. These amplifiers are sort of "in between." They have less efficiency than class B amplifiers but more efficiency than class A amplifiers. At the same time, they have less distortion than class B amplifiers but more distortion than class A amplifiers.

There are two types of class AB amplifiers; AB_1 and AB_2. The class AB_1 amplifier is biased a little more negative than the class A operating point, as illustrated in Fig. 36. In class AB_1 operation the grid is never driven positive and most of the distortion results from the lower knee of the curve. In class AB_2 operation the bias point is chosen even further negative but not as negative as cutoff. Class AB_2 operation is also shown in Fig. 36. In class AB_2 operation, as in class B operation, the grid is driven positive for a short portion of the input cycle. The resulting distortion in AB_2 operation is due to both knees of the curve. Since the grid draws current during it, AB_2 operation requires more driving power than AB_1 operation.

1. AB_1 and AB_2 operation occur when you bias somewhere between the class A operating point and (a) ____________. Suppose you took the amplifier of Fig. 35 and changed E_{cc} so that the tubes were biased not at cutoff but at a value slightly less than cutoff. You would then be operating the amplifier class (b) ________ if you drove the grids hard enough to draw current on peaks. On the other hand, if you did not drive it hard enough to draw grid current, you would be operating the amplifier class (c) ________. The efficiency of the amplifier would go (d) *(up) (down)* after you changed E_{cc} from its value at cutoff. The distortion of the amplifier would go (e) *(up) (down)* after you changed E_{cc} from its value at cutoff.

ANSWERS

1. (a) Cutoff, or the class B operating point
(b) AB_2; (c) AB_1; (d) down; (e) down

18 THE CLASS C AMPLIFIER

. . . So far we have discussed amplifiers of classes A, AB_1, AB_2, and B. In these amplifiers the grid bias was taken progressively more and more negative with progressively higher and higher efficiency. The class B amplifier had the most negative grid bias and the highest efficiency, the bias point being at cutoff.

It is possible to use a single-tube or push-pull amplifier and bias it far beyond cutoff, thereby obtaining a higher efficiency still. Such an amplifier is called a class C amplifier, a single-tube version of which is

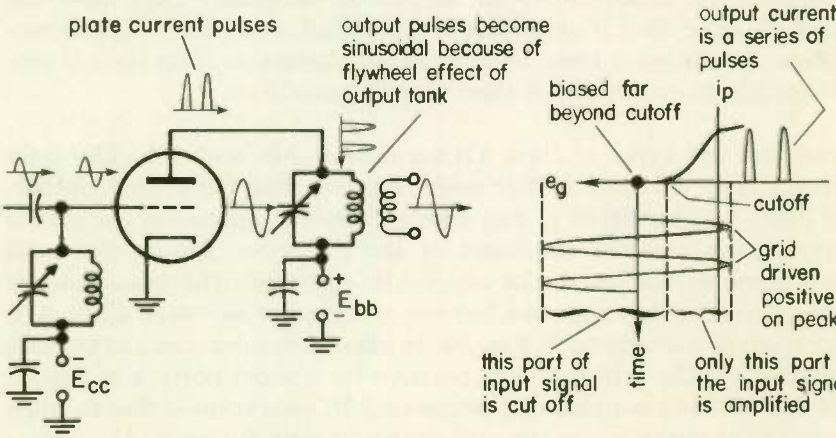

Fig. 37 The operation of a class C amplifier.

shown in Fig. 37. As you may have noted, increasing the negative grid bias also increases the distortion in the output signal current. In the class C amplifier the grid is driven positive for a portion of the input cycle. The resulting output current is not even half of the input waveform but is merely a succession of pulses formed by the very top of that waveform.

Plate currrent flows only during a small fraction of the input cycle. You might say that the distortion has become so bad that almost all of the input waveform has been clipped off except for this small pulse. The pulses go out of the plate of the tube into the output tank circuit, which is tuned to the input frequency. By means of the flywheel effect of this tank circuit the pulse is restored to a sine wave which appears across the output tank. A class C amplifier is inoperative unless the incoming grid is of sufficient amplitude to unblock the tube on positive peaks so that plate current can flow to excite the tank circuit. A class C amplifier cannot be used to amplify audio signals, which vary in amplitude and frequency. For one reason, the low amplitude signals would not unblock the tube, and so would not be amplified. Also a class C amplifier requires a tuned tank circuit. Tuned circuits respond to a relatively narrow band of frequencies. It is not practical to have a tuned tank circuit that will respond to all the different frequencies usually found in audio signals.

WHAT HAVE YOU LEARNED?

1. When operating class C, a tube is biased far beyond (a) ________. The tube must then be driven hard enough so that grid current (b) *(is) (is not)* drawn on peaks of the input signal. Does the plate current waveform resemble the input current waveform in a class C amplifier? (c) ________.

2. A class C amplifier requires a tuned plate circuit so that the output tank can restore a (a) ____________ waveshape to the output current pulses of the tube. To what frequency must you tune the output tank in a class C amplifier? (b) ____________________.

3. Your voice probably simultaneously contains sinusoidal waves having frequencies anywhere from 20 cps to 15 kc. Why can't you use a class C amplifier to amplify your speech?

4. A tube in class B operation conducts during 180° of the input cycle. A tube in class C operation conducts in pulses which are much *(less) (greater)* than 180° of the input cycle.

1. (a) Cutoff; (b) is
   (c) No . . . The output current is made up of a series of pulses corresponding to the very top portion of the input signal.
2. (a) Sinusoidal (b) To the frequency of the input signal (or to a harmonic of that frequency).
3. The tuned tank circuit could not respond to such a wide frequency range.
4. Less

19 CHARACTERISTICS OF THE CLASS C AMPLIFIER

. . . Since class C amplifiers require tank circuits, and are therefore tuned amplifiers, they find their application in radio-frequency work where, for example, the output of an oscillator must be amplified in a transmitter. In the preceding topic you saw the following characteristics of a class C amplifier:

1. The grid is biased far beyond cutoff (usually about 2 to 4 times the cutoff value) and is driven hard enough that the grid goes positive and draws current during an extremely small portion of one cycle, at the positive peaks of the input wave.

2. The plate current output consists only of a succession of short pulses which are made up of the very top portion of the input waveform and which last for a small fraction of the input cycle.

3. The flywheel effect of the output tank circuit restores a sine-wave shape to the output pulses of current.

Since the output current is made up of a series of short pulses, the tube is actually conducting for only a very short period of time each cycle. Figure 38 shows typical output current pulses. One pulse only lasts for 60° of the input cycle. Since the tube is on for only this short period of time, very little power is lost in the tube in the form of heat

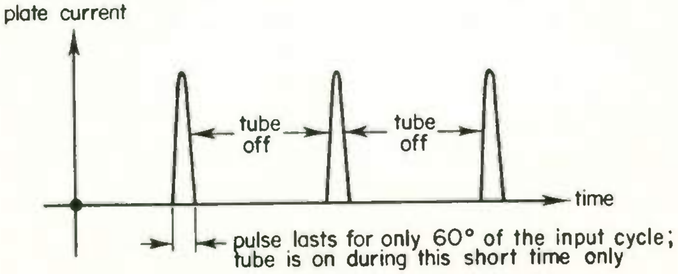

Fig. 38 The plate current output of a class C amplifier.

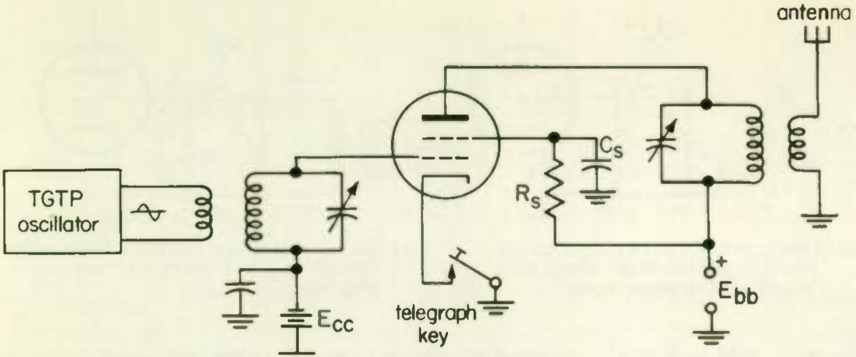

Fig. 39

and a very high efficiency is obtained. Efficiencies for class C amplifiers are on the order of from 70 to 80 per cent. Because the grid of the class C amplifier draws current, you must supply power to the input circuit to drive the tube, as was the case in class B_2 and class AB_2 amplifiers.

Because of the high bias voltage required and because plate current flows only a small part of the cycle, cathode bias cannot be used as the entire source of bias voltage with class C operation.

WHAT HAVE YOU LEARNED?

1. Figure 39 shows a class C amplifier amplifying the output of an oscillator and feeding the amplified signal to an antenna. A telegraph key is provided in series with the cathode of the tube to turn the tube on and off so that it can be used as a CW transmitter. Since the grid draws current on the positive peaks of the input signal, the oscillator must supply (a) ____________ to the input of the amplifier. The efficiency of the amplifier is typically (b) ____________ per cent. If you used a class B or a class A amplifier instead of a class C amplifier, you would have a (c) *(higher) (lower)* efficiency. Can the frequency of the oscillator and the frequency to which the grid tank is tuned be different? (d) ________. If the cutoff value of the tube were − 30 volts, would − 60 volts be a proper value for E_{cc}? (e) ____________ .

ANSWERS

1. (a) Power; (b) 70 to 80 per cent; (c) lower; (d) no
   (e) Yes . . . − 60 volts is twice the cutoff value.

20 GRID LEAK BIAS . . . Because of the fact that the grid draws current under class C operation, an economical circuit can be constructed to produce the high negative voltage needed to bias the grid beyond

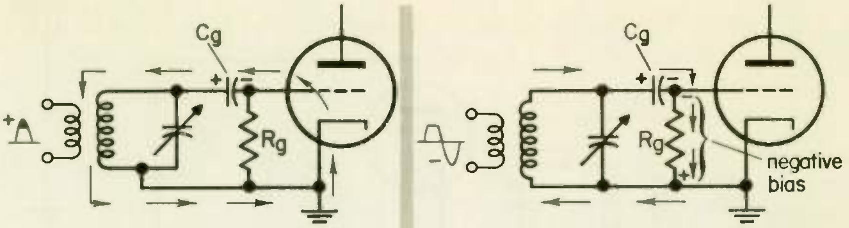

(a) During positive peaks, Cg charges through grid-cathode, which acts like forward-biased diode

(b) During rest of the cycle, Cg discharges through Rg and produces negative grid bias

Fig. 40 **Grid leak bias is obtained by adding C_g and R_g to the grid circuit.**

cutoff and thereby eliminating the need for a separate bias battery. This circuit is obtained by adding a capacitor C_g and a resistor R_g to the grid circuit of the class C amplifier, as shown in Fig. 40.

On the first half-cycle, when the input voltage is large and positive, the grid becomes positive and the grid-cathode portion of the tube acts like a forward-biased diode (almost a short circuit). During this time, the capacitor C_g charges up as shown. For the rest of the cycle the grid goes negative and the grid-cathode portion of the tube acts like a reverse-biased diode (open circuit), so that the charge on the capacitor leaks off through R_g and produces a large negative voltage across it. This negative voltage appears from grid to cathode and becomes the bias voltage E_{cc} needed for class C operation. R_g is called the grid leak resistor. To calculate the bias voltage developed, you must multiply the average value of grid current by R_g:

$$E_c = R_g \times I_g$$

Thus, if you have a grid leak of value $R_g = 47$ kilohms and an average value of grid current of $I_g = 1$ ma, then you will develop a negative bias of 47 kilohms × 1 ma = 47 volts.

WHAT HAVE YOU LEARNED?

1. Draw a TPTG amplifier operating class C, using grid leak bias, and having a series-fed plate circuit with plate neutralization.

2. You construct a class C amplifier using grid leak bias with a grid leak resistor of $R_g = 50$ kilohms. You make a measurement with a vacuum-tube voltmeter and find you are developing -50 volts of bias. What is the average value of grid current which your tube is drawing? ________ milliamperes.

3. How much bias will you develop across a grid leak resistor of 10 kilohms if the average grid current is $I_g = 10$ ma? ________ volts.

4. Why can't grid leak bias be used in a class A amplifier?

ANSWERS

1.

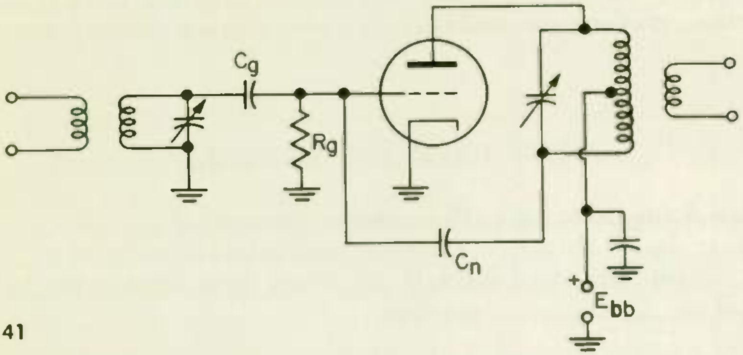

Fig. 41

2. 1 ma . . . $I_g = E_g \div R_g$ = 50 volts ÷ 50 kilohms = 50 volts ÷ 50 × 10^3 ohms = 1 ma
3. – 100 volts
4. The grid never draws current in class A operation, so you could never charge the grid capacitor.

21 COMPARING THE CLASSES OF AMPLIFIERS . . . It is important that you keep in mind the various characteristics of the class A, B, and C amplifiers. Table 1 summarizes these characteristics.

TABLE 1
AMPLIFIER CHARACTERISTICS

Factor	Class A	Class B	Class C
Bias	Center of linear portion of e_g-i_p curve	Cutoff	2 to 4 times cutoff
Efficiency	20 to 35%	50 to 60%	70 to 80%
Distortion	Negligible	Small	Pulse output not a reproduction of input signal
Grid drive	Grid always negative; no grid current	Grid usually driven positive; current drawn on peaks	Grid driven positive; grid current drawn on peaks

The characteristics of class AB_1 and AB_2 amplifiers are between those of class A and B amplifiers. Remember that in class AB_1 operation the grid is kept negative and no grid current flows, while in AB_2 operation grid current flows on peaks.

Notice in Table 1 how the properties of the classes of amplifiers vary. Grid bias is more and more negative as you move from class A to class B to class C. As the grid bias is made more negative, the efficiency, distortion, grid current, and driving power correspondingly increase.

WHAT HAVE YOU LEARNED?

1. Class A amplifiers have efficiencies on the order of (a) ______________ per cent; class C amplifiers have efficiencies on the order of (b) ______________ per cent; and class B amplifiers have efficiencies on the order of (c) ______________ per cent.

2. Which class of amplifier is not suitable as an audio amplifier? ______

3. Which class of amplifier requires the least amount of driving power? Why? ________

4. Which class of amplifier produces the least distortion? ________

5. Which class of amplifier requires two tubes for the total reproduction of an input signal? ________

6. Which class of amplifier is not biased as negatively as cutoff but draws grid current on positive peaks of the input signal? ________

7. Which class of amplifier is the least efficient? ________

ANSWERS

1. (a) 20 to 35; (b) 70 to 80; (c) 50 to 60
2. Class C
3. Class A, since the grid never draws current from the driving source.
4. Class A 5. Class B 6. AB_2 7. Class A

22 PLATE-CURRENT PLATE-VOLTAGE CURVES . . . For a given vacuum tube there is a particular range of values which the plate supply voltage E_{bb} must have if the tube is to operate properly. This range is determined by constructing curves which show how the plate

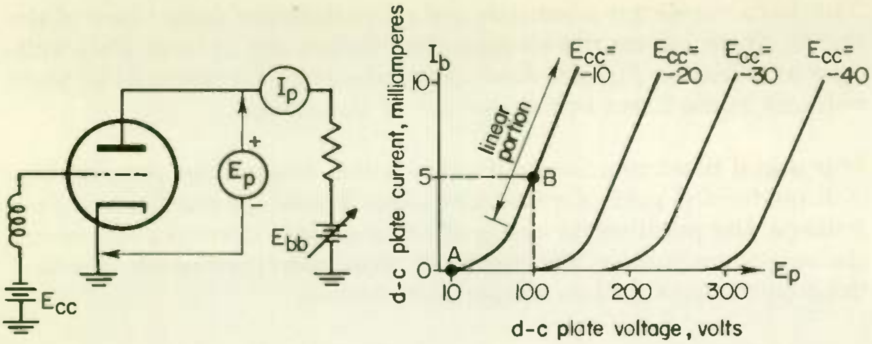

Fig. 42 Plate-current plate-voltage curves for a triode vacuum tube.

current I_p of the tube varies with plate voltage E_p when the grid bias E_{cc} is kept fixed.

Figure 42 shows the readings of a milliammeter in the plate circuit of a triode plotted against the readings of a voltmeter across the tube for various values of E_{bb}. For small values of plate voltage (such as at point *A*, where $E_p = 10$ volts and $E_{cc} = -10$ volts) the plate current is very small, too small, in fact, to provide a satisfactory d-c level about which the output signal can vary.

The triode is usually operated at a large enough plate voltage to be on the portion of the curve which is linear, or straight. For example, if your grid bias was $E_{cc} = -10$ volts, you could use a plate voltage of $E_p = 100$ volts, which would put you at point *B* in the straight part of the curve.

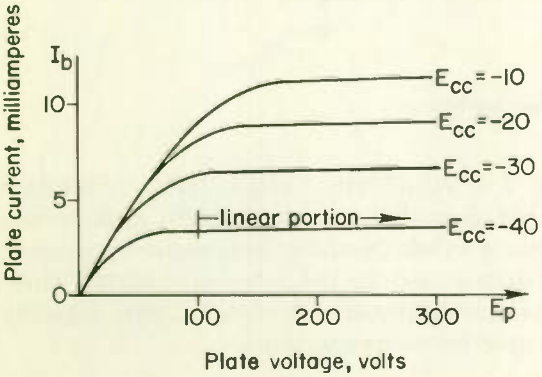

Fig. 43 Plate-current plate-voltage curves for a pentode vacuum tube.

The I_p-E_p curves for a pentode are quite different from those of the triode. These curves rise steeply, then flatten out at large plate voltages as shown in Fig. 43. Again the tube must be operated at plate voltages in the linear or flat portion of the curves.

It is useful to summarize the factors which determine a suitable bias voltage for the grid of a vacuum tube. These are the plate supply voltage, the permissible swing of the a-c plate current component, the excitation voltage, the maximum distortion permissible, the load impedance, and the class of operation desired.

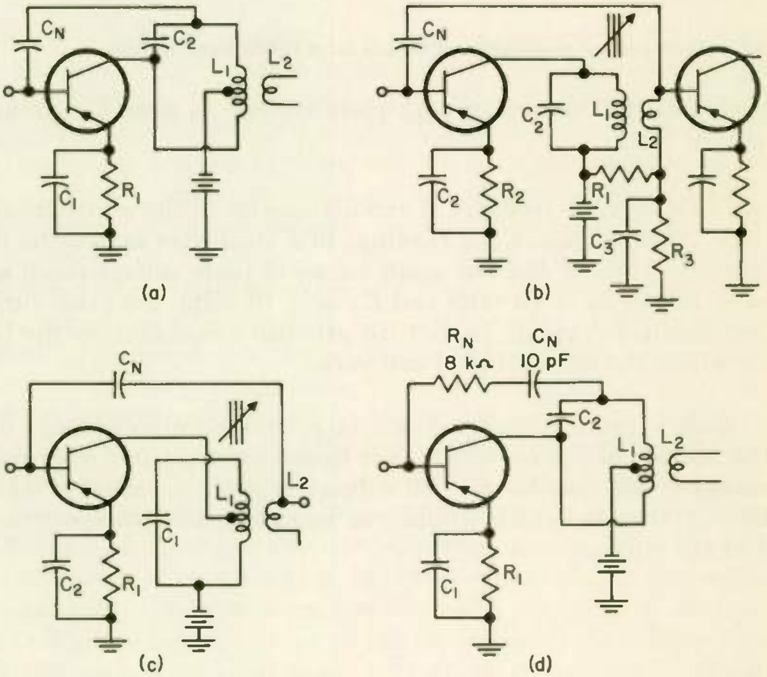

Fig. 44 Transistor neutralization methods.

23 NEUTRALIZATION IN TRANSISTOR CIRCUITS

. . . Feedback from output to input leading to oscillations is a problem with transistors and well as with vacuum tubes. Nothing equivalent to a screen grid is available for transistors to reduce the internal capacity. However, some transistor types have substantially less internal capacity than others, and thus less need for neutralization.

Four methods of neutralization are shown in Fig. 44. The circuit of (a) corresponds to the vacuum tube method of Fig. 21. In method (b) feedback is taken from the base of the following stage, and thus feedback 180° out of phase from the collector feedback signal is obtainable. If the feedback is not of the correct phase, it is merely a matter of reversing the leads of L_2, which will change the phase of the feedback signal. The circuit of Fig. 44(b) has the disadvantage that the output impedance of the transistor appears across the entire tank and lowers the tank Q. This is because putting a resistance across a parallel tuned LC circuit broadens the frequency response of the circuit —in other words, the circuit will not tune as sharply. Nor will the tank circuit have as high a value of impedance as a circuit without the shunting resistor. The circuit of Fig. 44(c) differs from (b) in that the collector is fed from a tap on L_1, rather than from the top of the coil. This improves the circuit Q because the output impedance of the transistor does not appear across the entire tank. Also, changes in circuit operation due to replacing the transistor with one with somewhat different characteristics are minimized with this arrangement.

In a vacuum tube amplifier, the internal feedback signal is coupled to the input entirely by means of the plate-to-grid capacitance, so negative feedback by means of a neutralizing capacitor works sufficiently well. In the transistor amplifier, however, some signal is fed back through the internal resistance of the transistor. Because the signal is fed back through a capacitance and a resistance, there is a slight phase shift in the signal. With the negative feedback obtained by the neutralizing capacitor alone, as shown in Fig. 44(a), the two feedback signals are not exactly 180° out of phase, so neutralization is incomplete. To make the two signals exactly 180° out of phase, the negative feedback signal must be shifted in phase. This is accomplished by putting a resistor in series with C_N as shown in Fig. 44(d). The combination of R_N in series with C_N causes the two feedback signals to be exactly 180° out of phase, and more complete neutralization is accomplished. This method of neutralization is called *unilateralization*. The resistor in series with the neutralizing capacitor can also be used in the circuits of Fig. 44 (b) and (c).

To avoid the need of neutralizing transistor circuits, a frequent practice is to operate the stage with a mismatched load. The effects of feedback are then less bothersome, but the gain of the stage is reduced.

LESSON 2405-4

AMPLIFIER CIRCUITRY

EXAMINATION

Circle the number of the correct answer for each question that follows. When you are finished, transfer the answers to the answer sheet by putting X's in the proper squares. When the graded answer sheet is returned to you, correct in this book any questions you may have missed. By doing so, you will have a record of the correct answers to all questions for review purposes.

1. With reference to oscillators, which one of the following statements is *not* correct?
   (1) An oscillator is an electronic a-c generator.
   (2) An oscillator is an amplifier which uses part of its output to supply its own input.
   (3) An oscillator may require neutralization.
   (4) An oscillator is an electronic device for converting d-c power to a-c power.

2. If in a vacuum-tube stage E_{bb} is 500 volts, the plate current is 100 ma, the grid leak current is 2 ma, and the grid leak resistance is 10,000 ohms, what is the grid bias voltage?
   (1) −50 volts
   (2) −200 volts
   (3) −20 volts
   (4) −10 volts

3. Which point on the grid-voltage plate-current curve of the figure below indicates the correct bias voltage for Class A operation?
   (1) Point *a*
   (2) Point *b*
   (3) Point *c*
   (4) Point *d*

4. Which point of the curve of the figure below indicates the correct bias voltage for class B operation? Select one of the answers given for Question 3.

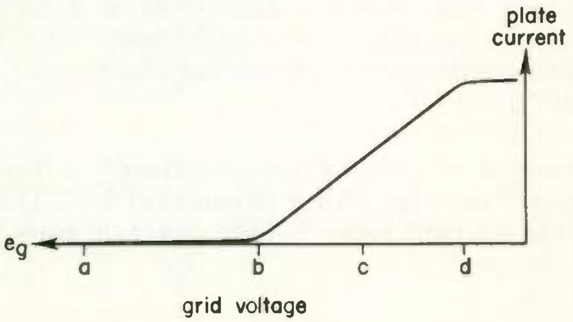

5. Which point of the curve of the preceding figure indicates the correct bias voltage for class C operation? Select one of the answers given for Question 3.

6. When a vacuum tube is properly operating class C,
   (1) grid current flows.
   (2) grid current does not flow.
   (3) grid current may or may not flow.
   (4) a triode tube should not be used.

7. Grid current is flowing in a class A amplifier employing one tube. Which one of the following comments applies?
   (1) This is normal operation in some class A circuits.
   (2) This indicates improper bias or too high an input signal.
   (3) This indicates too low an input signal.
   (4) This indicates too high a plate voltage.

8. Too high a value of negative grid bias in a class A audio amplifier will
   (1) Cause the negative peaks of the a-c component of the plate current to be cut off.
   (2) Cause the positive peaks of the a-c component of the plate current to be flattened.
   (3) Increase the plate current.
   (4) Cause the tube to overheat.

9. Too low a value of negative grid bias in a class A amplifier will
   (1) cause grid current to flow when a strong signal is applied to the grid.
   (2) cause the negative peaks of the a-c component of the plate current to be cut off.
   (3) increase the power output from the stage.
   (4) decrease the plate current.

10. A class B_2 audio-frequency amplifier stage requires considerably greater driving power than a class A amplifier because:
    (1) Grid draws current, and the power dissipated in the grid resistor by this current flow must be furnished by the signal source.
    (2) Power output from a class B_2 stage is greater, so that driving power must also be greater.
    (3) A driving signal of greater amplitude is required for class B_2 operation.
    (4) Sufficient driving power is required to block plate current flow for approximately half of each cycle.

11. Which of the following statements is *not* correct with reference to a class A audio amplifier?
    (1) Distortion is generally less than with other types of operation.
    (2) Power output is lower than with other classes of operation.
    (3) Efficiency is lower than with other classes of operation.
    (4) Power amplification is low.

12. Which of the following is *not* a characteristic of a properly operating class A audio amplifier?
    (1) Tube is always biased to operate over the linear portion of the plate-current grid-voltage curve.
    (2) The grid never draws current from the cathode.
    (3) Average plate current varies in accordance with the amplitude of the incoming signal.
    (4) Plate current flows when there is no signal on the grid.

13. The grid bias used with a class A amplifier is
    (1) negative and less than for class B or class C.
    (2) negative and greater than for class B or class C.
    (3) positive and less than for class B or class C.
    (4) positive and greater than for class B or class C.

14. A class A amplifier is one that is
    (1) biased so that plate current flows less than one-half of the excitation cycle.
    (2) biased so that plate current flows approximately one-half of the excitation cycle.
    (3) biased so that plate current flows three-quarters of the excitation cycle.
    (4) biased so that plate current always flows.

15. The plate current in a properly operating class A amplifier
    (1) Increases in average value with an increase in amplitude of the incoming signal to the grid.
    (2) Decreases in average value with an increase in amplitude of the incoming signal.
    (3) Average value stays the same at all times.
    (4) Average value increases when bias on grid of next stage is made more negative.

6. Which of the following is *not* a characteristic of a class B amplifier?
(1) Must be used with push-pull in an audio amplifier.
(2) No distortion when carefully adjusted and balanced in a push-pull arrangement.
(3) Grid may draw current from cathode.
(4) Usually uses incoming signal of greater amplitude than used for class A operation.

7. With class B operation, plate current flows
(1) Much less than one-half of the excitation cycle.
(2) One-half of the excitation cycle.
(3) Three-quarters of the excitation cycle.
(4) The entire excitation cycle.

8. With class C operation, during what time does plate current flow? Select one of the answers given for Question 17.

9. Which of the following is *not* a characteristic of a class C amplifier?
(1) Higher power amplification than for class A.
(2) High power output.
(3) High efficiency.
(4) Plate current flows during only a small part of each excitation cycle.

0. Class C amplifiers cannot be used for audio-frequency amplification because
(1) Intolerable distortion of the audio input signal cannot be avoided.
(2) A sinusoidal excitation signal is needed.
(3) Efficiency, while high at radio frequencies, is low at audio frequencies.
(4) Class C amplifiers draw grid current.

1. Typical efficiency of a class A amplifier is
(1) 15 to 20 per cent
(2) 20 to 35 per cent
(3) 50 to 60 per cent
(4) 70 to 80 per cent.

2. What is the typical efficiency of a class B amplifier? Select one of the answers given for Question 21.

23. What is the typical efficiency of a class C amplifier? Select one of the answers given for Question 21.

24. Why is the plate circuit efficiency of an r-f amplifier tube operating as class C higher than that of the same tube operated as class B?
    (1) The efficiency of class C is not higher than that of class B.
    (2) A high excitation voltage can be used.
    (3) The tube has a high power output.
    (4) Relatively little of the input power is lost on the plate in the form of heat.

25. Which one of the following is not a factor in determining a suitable bias voltage for the grid of a vacuum tube?
    (1) class of operation desired.
    (2) whether series or shunt plate feed is to be used.
    (3) Excitation voltage available.
    (4) Plate supply voltage.

26. In Fig. 45 two sets of plate-voltage plate-current curves are shown.
    (1) The curves in (a) could be those of either a triode or a pentode.
    (2) The curves in (b) could be those of either a triode or a pentode.
    (3) The curves of (a) are for a pentode and those of (b) are for a triode.
    (4) The curves of (a) are for a triode and those of (b) are for a pentode.

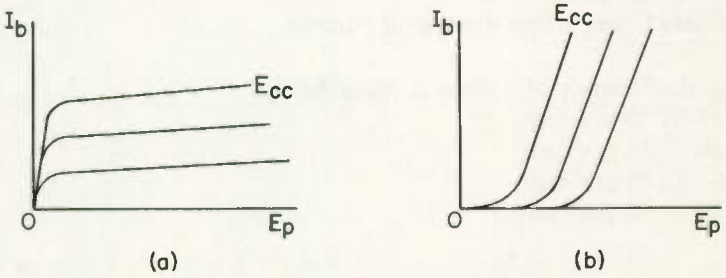

Fig. 45

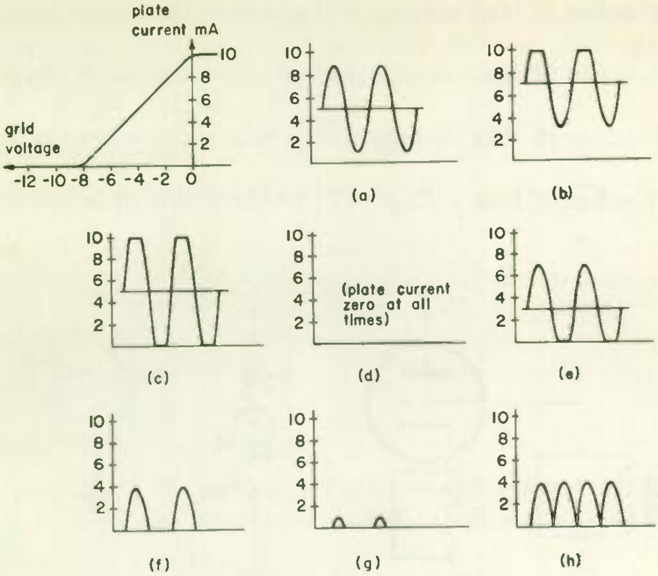

Fig. 46

27. Figure 46(a) through (h) are output wave shapes obtained when a signal with peak value of 3 volts is applied to an audio amplifier under various bias conditions, using a tube with E_g-I_p characteristics as shown. What value of grid bias voltage will produce the wave shape of (a)?
    (1) −12 volts
    (2) −10 volts
    (3) −8 volts
    (4) −6 volts
    (5) −4 volts
    (6) −2 volts
    (7) obtained when signal increases to 5 volts peak value and grid bias is −4 volts.
    (8) impossible

28. What value of grid bias voltage will produce the wave shape of (b), assuming the same peak value voltage as in Ques. 27? *(Select answer for this and the following six questions from choices for Ques. 27.)*

29. What value of bias voltage will produce the wave shape of (c)?

30. What value of bias voltage will produce the wave shape of (d)?

31. What value of bias voltage will produce the wave shape of (e)?

32. What value of bias voltage will produce the wave shape of (f)?

33. What value of bias voltage will produce the wave shape of (g)?

34. What value of bias voltage will produce the wave shape of (h)?

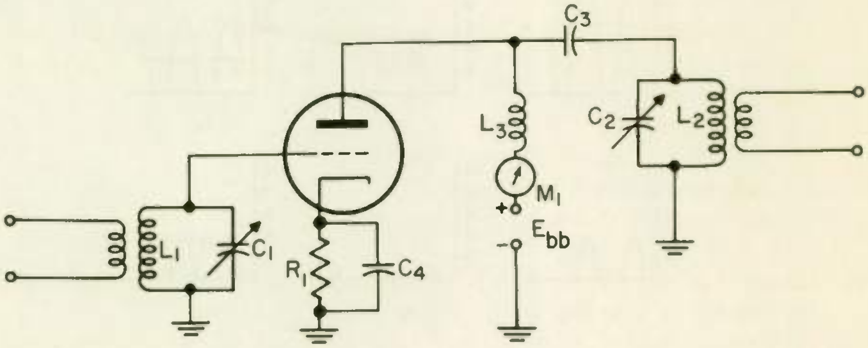

Fig. 47

35. You are troubleshooting the amplifier shown in Fig. 47. What class of operation is employed? Hint: Note method of obtaining bias voltage.
    (1) Class A (2) Class C

36. You notice that meter M_1 reads higher when a signal is applied than when there is no signal. Is this normal?
    (1) Yes (2) No

37. With a signal applied to the circuit of Fig. 47, you find that the output of the stage is badly distorted. Replacing the tube does not help. You measure the plate voltage, which you find to be normal. With no signal applied you measure 0 volts between the control grid and cathode. Which of the following could explain this reading?
    (1) This is normal when no signal is applied.
    (2) L_3 may be shorted.
    (3) L_1, C_1, or both may be shorted.
    (4) L_1 (but not C_1) may be shorted.
    (5) R_1 may be open.
    (6) C_4 may be shorted.
    (7) Plate current is too high.

38. You next measure the a-c voltage between cathode and ground with the signal applied. If the circuit is operating properly this reading would be
    (1) the proper bias voltage for the grid.
    (2) nearly zero volts.
    (3) between 4 and 8 volts, usually.
    (4) the same as the voltage of the applied signal.
    (5) the voltage E_{bb} less the voltage drop across the tube.

39. You measure the d-c voltage between cathode and ground, and find it to be zero volts. For a properly operating circuit, this reading would be
    (1) zero volts.
    (2) the proper bias voltage for the grid.
    (3) between 4 and 8 volts, usually.
    (4) the same as the voltage of the applied signal.

40. Resistor R_1 is color coded Brown-Black-Red-Silver. You measure its resistance and find it to be 900 ohms. Therefore,
    (1) this resistor may be faulty, since its resistance is less than the color coded value.
    (2) this resistor is not faulty, since its resistance does not vary from the color coded value by more than the coded tolerance.
    (3) this resistor has too high a value and should be replaced.

41. Some months later you again find yourself troubleshooting the circuit of Fig. 47. When you apply plate voltage, meter M_1 reads extremely high. (Since M_1 is a d-c meter, any signal current through it will not be read.) This high reading could be caused by
    (1) L_3 being shorted.
    (2) C_3 being shorted.
    (3) L_2 or C_2 being shorted.
    (4) Any one of the above.

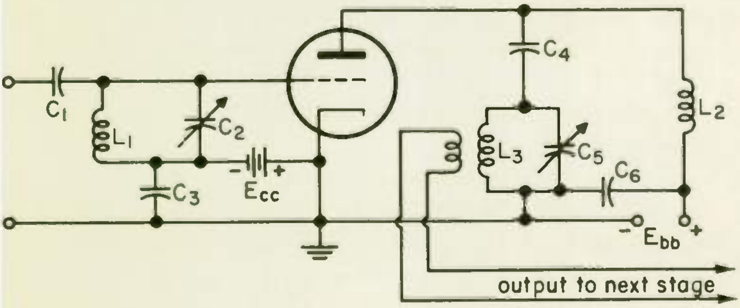

Fig. 48

42. How would you classify the amplifier of Fig. 48 with reference to the type of tuning in plate and grid circuits?
    (1) Untuned grid, shunt-fed tuned plate
    (2) Series-fed tuned grid, shunt-fed tuned plate
    (3) Shunt-fed tuned grid, untuned plate
    (4) Shunt-fed tuned grid, series-fed tuned plate
    (5) Untuned grid, series-fed tuned plate
    (6) Untuned grid and untuned plate

43. Will the amplifier of Fig. 48 work properly as shown? If not, what is wrong? It is assumed that neutralization is not needed. If more than one of the selections indicate faults, check all that do so on your answer sheet.
    (1) Circuit is O.K. as drawn.
    (2) Grid circuit is improperly connected.
    (3) Capacitor C_3 is improperly connected.
    (4) A capacitor should be shown across the power supply E_{bb}.
    (5) Plate tank circuit not shown in circuit correctly.
    (6) Not enough grounded points are shown.
    (7) The circuit should have a cathode resistor and by-pass capacitor.
    (8) Capacitor C_6 must be removed.

44. What is the purpose of R_2 in Fig. 14A?
    (1) To provide a d-c path between base and ground, so that base does not float
    (2) It helps to temperature stabilize the operation of T_1
    (3) To by-pass the signal around the transistor
    (4) To control the input signal to the base


CLEVELAND INSTITUTE OF ELECTRONICS

CLEVELAND INSTITUTE OF ELECTRONICS / CLEVELAND, OHIO

electronics

CLEVELAND INSTITUTE OF ELECTRONICS / CLEVELAND, OHIO

How to Work with Transistors

2412-4

An AUTO-PROGRAMMED® Lesson

ABOUT THE AUTHOR

Through over 15 years experience in helping students learn through home study, Mr. Geiger has obtained an intimate understanding of the problems facing home-study students. He has used this knowledge to make many improvements in our teaching methods. Mr. Geiger believes that students learn fastest when they actively participate in the lesson, rather than just reading it.

Mr. Geiger edits much of our new lesson material, polishing up the manuscripts we receive from subject-matter experts so that they are easily readable, contain only training useful to the student in practical work, and are written so as to teach, rather than merely presenting information.

Mr. Geiger's book, *Successful Preparation for FCC License Examinations* (published by Prentice-Hall), was chosen by the American Institute of Graphic Arts as one of the outstanding text books of the year.

This is an AUTO-PROGRAMMED* Lesson exclusive with the Cleveland Institute of Electronics. It is your assurance of the finest in technical education and training.

**Registered Trademark*

Accredited by the Accrediting Commission of the National Home Study Council

The Accrediting Commission has been approved by the U.S. Office of Education as a "nationally recognized accrediting agency."

CLEVELAND INSTITUTE OF ELECTRONICS

How to Work with Transistors

By DARRELL L. GEIGER
Senior Project Director
Cleveland Institute of Electronics

2412-4

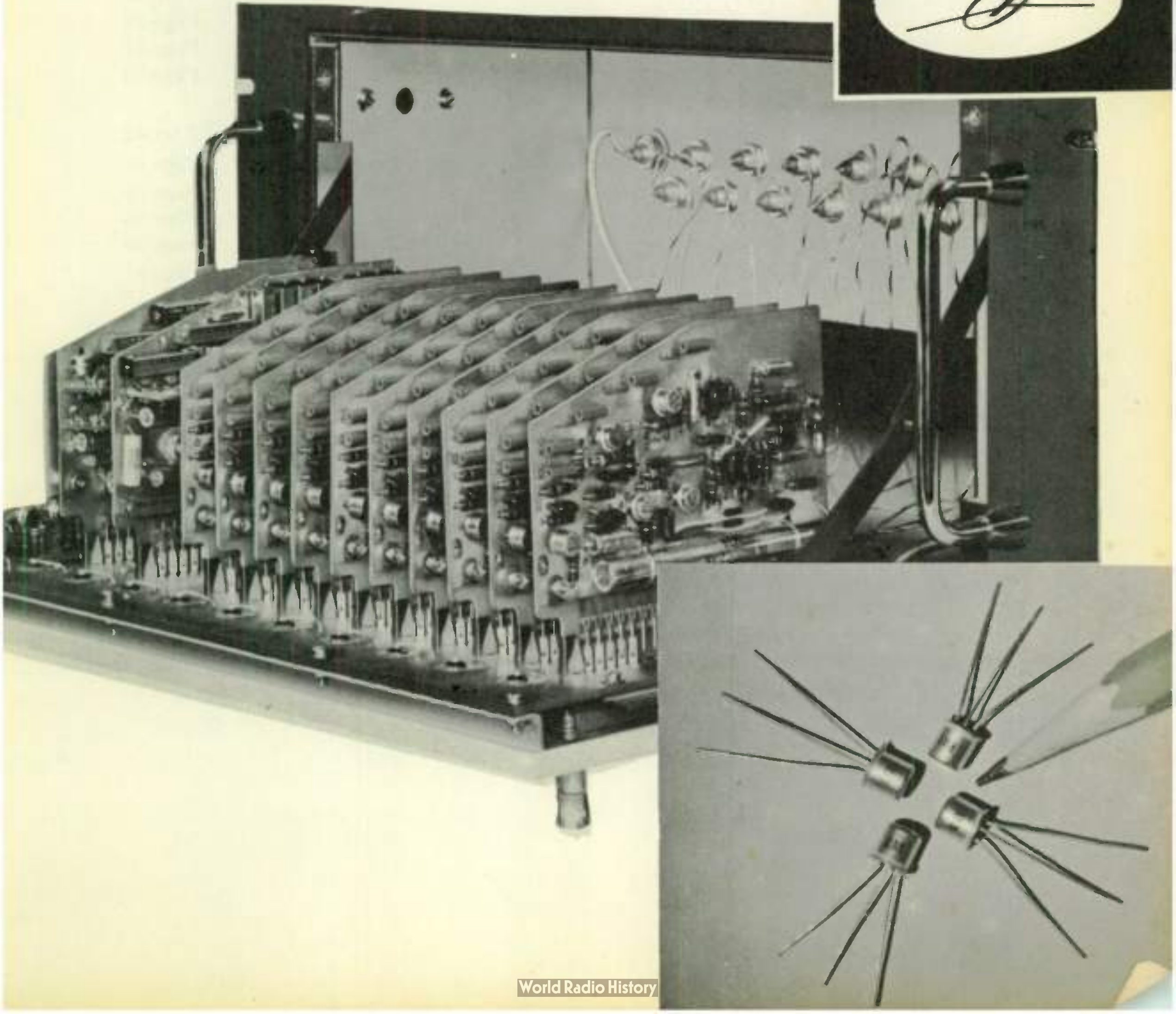

In this lesson you will learn...

Frontispiece: *Small rugged transistors make it possible to build compact computer circuits capable of processing information at fantastic speeds.*
Photo: Courtesy, Raytheon Company.

SECOND EDITION/Third Revised Printing/December, 1967.

2412-4

A chat with your instructor

In previous lessons you have studied the basic circuitry associated with transistors. In this lesson the theory of operation of the transistor will be explored, to better enable you to build and maintain transistor circuitry. In addition, transistor circuits will be studied in more detail than has thus far been done.

The practical use of transistors involves a number of complications not found with vacuum tubes. The most important of these is the tendency of transistor characteristics to vary, not only with temperature changes but also with aging and manufacturer's tolerances.

Two "identical" transistors can have substantially different characteristics. Circuits must therefore be designed to work well over a wide range of different transistor characteristics. This complicates the circuitry, but it is an advantage in servicing. Although several hundred transistor types are manufactured, most of them can be successfully replaced by selecting from a relatively few types kept in stock. Of course, it is always better to replace with the same type number, or with a type number specifically approved by the manufacturer, and for many types of work this is a requirement.

Of the operating characteristic changes that take place in transistors, variation in leakage current is the most important. Much of this lesson is devoted to understanding it and to finding ways to compensate for its effects. Fortunately, circuitry that compensates for leakage current variations is also effective in compensating for most other variations in transistor characteristics. Therefore, it is practical to limit the study to methods of correction for leakage current variations.

Additional compensation is often used to correct for variations in transistor gain, however. This is done by the use of inverse (negative) feedback, which you will study. Inverse feedback is sometimes used in tube circuitry to reduce distortion and improve stability, but it is much more widely used with transistor circuitry.

You will also study direct-coupled circuits, because they are much more widely used with transistors than with tubes. Coupling capacitors between stages must be large for transistor circuits, especially if good low-frequency response is required. Because of the low voltages involved, d-c coupling is more practical than with tubes, and it eliminates the need for the coupling capacitor.

Before you start this lesson you should review material on transistors covered in previous lessons, and in particular the lessons on diodes. Since a transistor consists of two diodes, understanding diode theory is basic to understanding transistor theory.

How to Work with Transistors

HOW TRANSISTORS OPERATE

1 LEAKAGE CURRENT AND CURRENT GAIN . . . An ordinary transistor consists of two diodes. The collector and base, the one composed of N-type semiconductor material and the other of P-type material, form one junction, as can be seen in Fig. 1. The base and emitter, which also consist of opposite type materials, form the other diode.

In Fig. 1 the collector-base diode is reverse-biased by battery V_{CC}. As a result a small reverse current will flow, as in an ordinary semiconductor diode. This is called the *collector-base leakage current,* and it is represented by the symbol I_{CBO}, or by I_{CO}. The *O* in the subscript means that the third lead (the emitter in this case) is open.

Figure 2(a) differs from Fig. 1 in that the battery voltage is now shown connected between collector and emitter, with the base lead now open. The resulting leakage current flow is called I_{CEO}. Since the emitter-base diode is forward-biased, and thus offers little opposition to current flow, a comparision of Fig. 2(a) with Fig. 1 could easily lead one

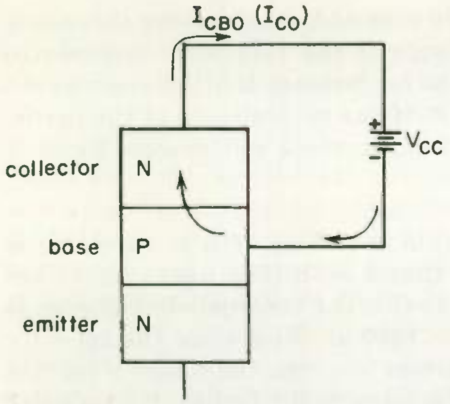

Fig. 1 Measuring the collector-base leakage current.

to suppose the I_{CBO} and I_{CEO} would be essentially equal. This is far from the case, however. You will find that I_{CEO} is many times greater than I_{CBO}. Since an understanding of leakage current is essential if you are to work intelligently with transistors, the reason for this strange phenomenon will be the subject of the next several pages.

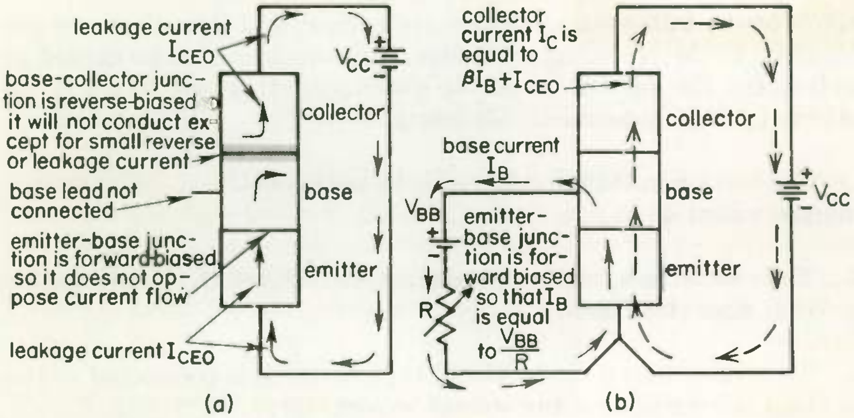

Fig. 2 Current flow in NPN transistors (a) when base is open and (b) when base current flows.

In Fig. 2(b) a supply voltage V_{BB} is shown connected between base and emitter, causing a base current I_B to flow. Since the emitter-base junction is forward-biased, it offers little resistance to current flow. Hence, the resistor R must be used in series to limit the base current I_B to the desired value.

When a base current flows, the collector current greatly increases.

You can find the change in collector current by multiplying the change in base current by the *current gain* of the transistor, represented either by β (Greek letter beta) or by h_{fe}. Suppose that I_B is increased 5 μa by reducing the resistance of R. If the current gain of the particular transistor is 50, then the collector current will increase by $50 \times 5\ \mu a = 250\ \mu a$.

Suppose that the leakage current I_{CEO} is 5 μa. What will I_C be in Fig. 2(b), if I_B is 25 μa? Assume that β is 50. The base current has changed from zero in (a) to 25 μa in (b). The corresponding change in collector current is $50 \times 25\ \mu a = 1250\ \mu a$. Now since the collector current was 5 μa when the base current was zero, the collector current is now $5 + 1250 = 1255\ \mu a$. The formula for finding the collector current is

$$I_C = \beta I_B + I_{CEO}$$

WHAT HAVE YOU LEARNED?

Many of the following questions are review, and thus they are not answered in the preceding discussion. You should review as needed to understand the answers to all the questions; otherwise, you will not be able to fully understand this lesson.

1. Conduction in P-type material is by means of (a) __________ charges, called (b) __________.

2. The emitter in a transistor is more heavily doped than the collector is. What does this mean?

3. To reverse-bias a diode, the N-type material is connected to the __________ terminal of the voltage source.

4. Is the transistor in Fig. 3 of the NPN or PNP type? __________

5. In Fig. 3 lead *A* is the (a) __________, lead *B* is the (b) __________, and lead *C* is the (c) __________.

6. Remembering that the base-emitter junction is always forward-biased and the collector is reverse-biased, the proper polarity for the top terminal of the voltage source V_{BB} in Fig. 3 is (a) __________ and for the top terminal of V_{CC} is (b) __________.

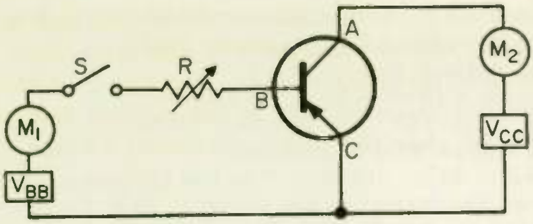

Fig. 3

7. To find the leakage current (*I_{CEO}*) of the transistor in Fig. 3, you would (a) *(open) (close)* switch *S* and then read microammeter (b) *(M_1) (M_2)*.

8. Suppose in Fig. 3 that the leakage current *(I_{CEO})* is 20 μa and that the current gain is 80. If the base current is 15 μa, what is the collector current? ____________

9. If the base current of Problem 8 were to decrease by 2 μa, then the collector current would (a) *(increase) (decrease)* by (b) ______________ μa.

10. Assume that the leakage current is negligible in Fig. 3 and that a collector current of 4 ma is wanted for best operation. You should adjust *R* so that microammeter M_1 reads __________ μa. This value of I_B is called the base bias current.

11. It is particularly important in studying transistors to distinguish between current gain, voltage gain, and power gain. The amplifier stage of Fig. 4 has a voltage gain of (a) ____, a current gain of (b) ____, and a power gain of (c) ____ .

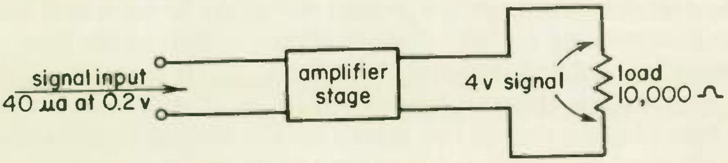

Fig. 4

12. If the collector current in Fig. 3 is 4 ma and the base current is 50 μa, the emitter current is ________ μa.

ANSWERS

1. (a) Positive; (b) holes
2. It means that the emitter has more impurities than the collector, and thus has more charge carriers.

3. Positive 4. PNP 5. (a) Collector; (b) base; (c) emitter
6. (a) Negative; (b) negative 7. (a) Open; (b) M_2
8. 1220 μa . . . $I_C = \beta I_B + I_{CEO}$

$$= 80 \times 15\ \mu\text{a} + 20\ \mu\text{a} = 1220\ \mu\text{a}$$

9. (a) Decrease (b) 160 . . . $80 \times 2\ \mu\text{a} = 160\ \mu\text{a}$
10. 50 . . . 4 ma is 4000 μa. $4000/80 = 50\ \mu\text{a}$.
11. (a) 20 . . . $4/0.2 = 20$ (b) 10 . . . First find the current through the load. $4/10{,}000 = 400\ \mu\text{a}$. The current gain is $400\ \mu\text{a}/40\ \mu\text{a} = 10$.

(c) 200 . . . Using the formula $P = EI$, find the signal power input and the signal power in the load. Signal power input is $40\ \mu\text{a} \times 0.2$ volts $= 8\ \mu\text{w}$. Power in the load is $400\ \mu\text{a} \times 4$ volts $= 1600\ \mu\text{w}$. Power gain is $1600/8 = 200$.

12. 4050 . . . First draw arrows on the base and collector leads to show the direction of current for those two leads. For both leads the arrows will point in toward the transistor. Hence, the current going into the transistor at those two leads is $4000 + 50 = 4050\ \mu\text{a}$. By Kirchhoff's current law, the current leaving the transistor (or any other device) must equal the current entering.

2

INTERNAL TRANSISTOR OPERATION . . . In this topic we shall explore the internal operation of the transistor to see how the base current is able to control the amount of collector current. Two characteristics of the base are important in explaining the action. First, the transistor is manufactured so that the base region is very thin, just a few thousandths of an inch. Second, the base region is only lightly doped, so that it has relatively few charge carriers.

In this topic we assume that the leakage currents I_{CEO} and I_{CBO} are negligibly low and can therefore be considered as zero. The effect of leakage current will be considered in the next topic.

In Fig. 5 the base-emitter diode of the transistor is forward-biased by V_{BB}. As in any forward-biased semiconductor diode, the negative charge carriers in the emitter region will move toward and into the base region and the positive charge carriers (holes) in the base region will move toward and into the emitter region. (It may be helpful for you to review the theory of diode operation at this time.) Since the base, being lightly doped, has relatively few charge carriers, most of the movement is negative charge carriers moving to the base region.

Near the junction between emitter and base, some of the free electrons will meet and combine with holes, as indicated in Fig. 5 – electron *A* will combine with hole *B* and electron *C* with hole *D*. However, since the holes are relatively few in number and the base region is very thin, most of the negative charge carriers will be pulled by the positive collector voltage V_{CC} completely through the base region to the collector region without meeting up with a hole.

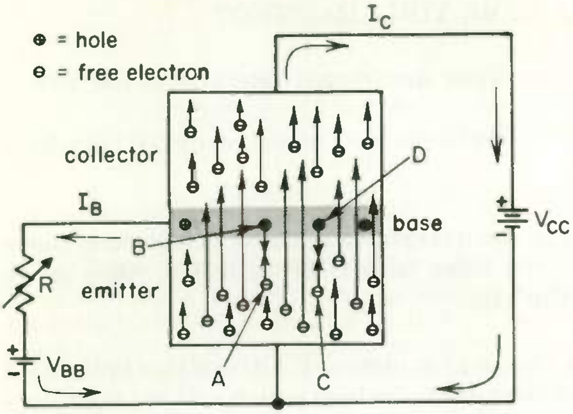

Fig. 5 **Movement of charge carriers in an NPN transistor.**

For those charge carriers that unite near the junction, the action of the base-emitter diode, forward-biased by V_{BB}, is the same as in any diode with which you are already familiar. The resulting current flow is I_B. The negative charge carriers that pass through the base region without meeting up with any holes form the collector current I_C. In most transistors not over 5 per cent of negative charge carriers coming from the emitter will meet up with holes. Hence, the collector current I_C will be at least 20 times the base current I_B; that is, the current gain will be at least 20.

Why does the collector current reduce to zero (if leakage current is zero) if the base lead is opened, so that the base current is zero? You will remember that P-type material contains holes and is neutrally charged. As the negative charge carriers from the emitter unite with holes to form negatively charged atoms, the number of holes is reduced. In order to form new holes to replace the ones lost, current I_B must flow. If I_B is zero, the number of holes quickly reduce to the point where the overall charge of the base is highly negative. Then negative charge carriers in the emitter region will no longer move toward the base, because the negative charge of the base region repels them. Hence, the collector current is zero.

By varying the value of I_B in Fig. 5 we vary the value of the collector current, because the strength of I_B determines how fast new holes can form. Negative charge carriers will move from emitter to base at such a rate that holes are neutralized as fast as new holes are formed.

We have illustrated transistor action with an NPN-type transistor. By merely reversing all polarities, and by interchanging holes and free electrons in Fig. 5, the discussion will apply equally well to a PNP-type transistor.

WHAT HAVE YOU LEARNED?

1. The base region in a transistor has *(many) (few)* charge carriers.

2. The majority charge carriers in the base region of a PNP transistor are *(holes) (free electrons).*

3. The charge carriers in the emitter region of an NPN transistor move (a) *(toward) (away from)* the base. In a PNP transistor they move (b) *(toward) (away from)* the base.

4. If all the holes in the base region of an NPN transistor unite with free electrons from the emitter, then the base region will be *(negatively charged) (positively charged) (neutrally charged).*

5. If all the holes in the emitter of a PNP transistor pass through the base to the collector without meeting up with any free electrons, then the base current I_B will be *(equal to the emitter current) (equal to the collector current) (zero).*

ANSWERS

1. Few 2. Free electrons 3. (a) Toward; (b) toward 4. Negatively charged
5. Zero . . . The base current is the current that results from emitter and base charges uniting.

3 THE ACTION OF LEAKAGE CURRENT . . . In Fig. 5 you saw how some of the free electrons passing through the base region combine with holes to build up a negative charge on the base. If this negative charge cannot drain off as formed, it blocks further collector current flow. In the perfect transistor of Fig. 5, the only way the negative base charge could drain off was by means of I_B. In a practical transistor there is another way—by means of the minority carriers.

While conduction in N-type semiconductor material is primarily by means of free electrons (called the majority carrier), you will remember there are a few holes in N-type material, which accounts for a small current flow. It is the current flow due to these holes that forms the collector-base leakage current I_{CBO} in Fig. 1. If there were no holes in the N-material, the leakage current in Fig. 1 would be zero. The holes in N-material are called the minority carrier, since they carry only a small fraction of the current.

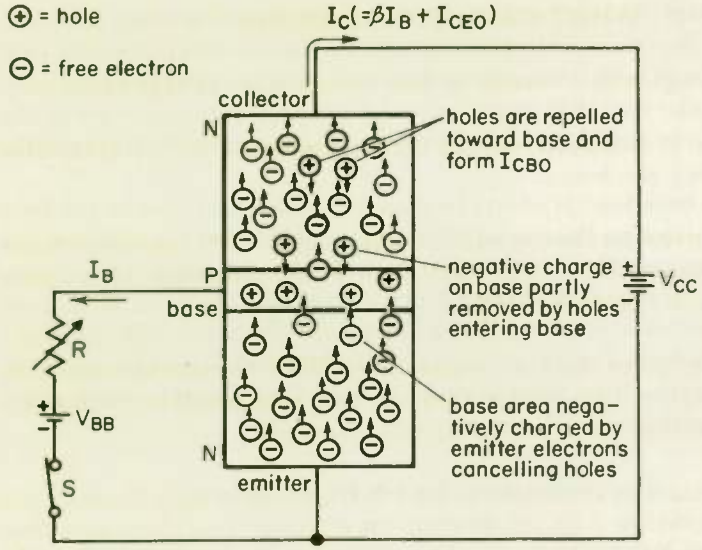

Fig. 6 **Internal operations in an NPN transistor, leakage current being considered.**

The holes in the collector region, being positively charged, are repelled from the positive battery voltage applied to the collector, and attracted by the negative charge of the P-region, so that they move downward in Fig. 6, as the drawing shows. As they enter the base region, they add holes to the base region to replace some of the holes lost because of combining with electrons from the emitter region. In other words, they help drain off the negative charge on the base.

In summary, holes in the base are constantly being lost because of collisions with emitter electrons on their way to the collector. This loss is constantly being replenished by new holes from two sources, so as to maintain equilibrium. One source is the electrons forming the base current I_B. Each electron exiting from the base forms a new hole in the base. The other source is the leakage current I_{CBO}, which carries holes to the base region.

Now what will the collector current be if we open switch *S* in Fig. 6, so that the base is opened and I_B becomes zero? It won't be zero because some of the negative charge on the base is still being drained off by the holes of I_{CBO} entering the base. For every hole that enters the base, β electrons will pass from emitter to collector. Remember that the great majority of the emitter electrons will pass through the base without colliding with a hole, and thus do not make the base more negative. Only the occasional ones that meet with base holes form negative charges which must be neutralized by new holes entering the base. The current due to electrons from emitter to collector is equal to β times the rate at which current is drained away from the base region. It doesn't make any difference how the current gets away from the base, whether by means of I_B or by means of I_{CBO}, or by means of both.

So when the base lead is open (I_B is zero) the current due to electron flow from emitter to base is equal to βI_{CBO}. However, this is not the entire collector current. I_{CBO} itself is also part of the collector current. For example, if I_{CBO} is 5 μa and β is 50, then the electron flow from emitter to collector is $5 \times 50 = 250$ μa, and the total collector current I_{CEO} is 250 μa + 5 μa = 255 μa. We thus find I_{CEO}, the collector current when the base lead is open (called the collector-to-emitter leakage current) to be

$$I_{CEO} = \beta I_{CBO} + I_{CBO} = (\beta + 1)\, I_{CBO}$$

If you think of leakage current as a current made up only of minority carriers, then I_{CEO} is not a leakage current. We call it a leakage current because ideally we would like the collector current to be zero when I_B is zero, and also because I_{CEO} is caused by the minority carrier I_{CBO} flow between collector and base.

When the base is not open, the total collector current is made up of two parts, collector current resulting from I_B, which is equal to βI_B, and the collector current due to I_{CBO}, which is equal to I_{CEO}. Hence, the total collector current is

$$I_C = \beta I_B + I_{CEO}$$

WHAT HAVE YOU LEARNED?

1. If in Fig. 6 I_B is 30 μa and collector-to-base leakage current is 5 μa, what is the value of the collector current I_C? Assume that β is 50.

2. Since the emitter-base junction is always forward-biased, and so has only a small opposition to current flow, the base current I_B in Fig. 6 is determined primarily by R and V_{BB} in accordance with Ohm's law. If V_{BB} is 2 volts and R is 50,000 ohms, what is the approximate value of I_B? (a) __________ μa. If I_{CBO} is 5 μa, what is the value of the I_{CEO} component of the collector current? (b) __________ μa. What is the collector current? (c) __________ μa.

3. The leakage current is highly dependent upon temperature. Assume that after the transistor in Problem 2 has warmed up in operation, the leakage current I_{CBO} increases to 30 μa. What is then the value of I_C? ________________

4. If a PNP type transistor were used in Fig. 6 and the battery polarities reversed, then the direction of movement of the majority current carriers in collector would be (a) *(up) (down)*. The leakage current I_{CBO} would consist of (b) *(holes) (free electrons)*.

5. If there were no leakage current, then the collector current would be __________ when the base current is zero.

6. The leakage current I_{CEO} *(increases) (decreases) (stays the same)* when the base operating current is increased.

7. The minority carriers in P-type material are *(free electrons) (holes)*.

8. The leakage current I_{CEO} is *(equal to) (much greater than)* the minority carrier current of the collector material.

ANSWERS

1. 1755 μa . . . $I_C = \beta I_B + I_{CEO} = \beta I_B + \beta I_{CBO} + I_{CBO}$
$= (50 \times 30) + (50 \times 5) + 5$
$= 1500 + 250 + 5 = 1755\ \mu\text{a}$

2. (a) 40 . . . $I_B = \dfrac{V_{BB}}{R} = \dfrac{2}{50{,}000} = 40\ \mu\text{a}$
(b) 255 . . . $(\beta + 1)\, I_{CBO} = 51 \times 5 = 255\ \mu\text{a}$
(c) 2255 . . . $I_C = \beta I_B + I_{CEO} = (50 \times 40) + 255 = 2255\ \mu\text{a}$

3. 3530 μa

4. (a) Up . . . The majority carriers in P-type material are holes. The collector of a PNP connects to the negative side of the battery. Hence, the holes, which have a positive charge, are attracted up toward the negative battery plate.
(b) Free electrons

5. Zero 6. Stays the same 7. Free electrons 8. Much greater than

4 STABILIZING CIRCUITS

TEMPERATURE STABILIZATION . . . The significant point to note from Problems 2 and 3 in the What Have You Learned section of

Topic 3 is that, although the base current stayed a constant 40 μa, a change in I_{CBO} of only 25 μa caused the collector current to change from 2255 to 3530 μa—over a 50 per cent increase!

If a transistor is to work properly in a circuit, the collector bias current I_C must be that value for which the circuit was designed. In most cases, wide variations in collector current cannot be tolerated. As a result, practical transistor circuits usually require more components than corresponding vacuum tube circuits, since special circuitry is needed to hold I_C reasonably constant for varying values of leakage current. Since temperature changes cause the variation in leakage current, the special circuitry needed is referred to as *temperature stabilization circuitry*.

The formula $I_C = \beta I_B + I_{CEO}$ shows us that (1) variations in the value of I_C are equal to the variations in value of I_{CEO} if neither I_B nor β changes and (2) the way to keep I_C more nearly constant is to use some type of circuitry that will cause I_B to decrease when I_{CEO} increases, and vice versa. This is the principle on which most temperature stabilization circuitry works.

5 CURRENT FEEDBACK STABILIZATION . . . One of the simplest stabilization methods is the use of a resistor in series with the emitter, R_e in Fig. 7(a). This method is called *current feedback stabilization*. A bypass capacitor C_e is used across R_e to pass the signal so it will not be attenuated by R_e. Figure 7(b) shows the same circuit without any provision for temperature stabilization.

To see how R_e improves the stability, assume values for V_{BB}, R_1, and β as shown in Fig. 7(b). For these values, you have already found from Problems 2 and 3 of Topic 3 that the value of I_C will vary from 2255 μa when I_{CBO} is 5 μa, to 3530 μa, when I_{CBO} is 30 μa. We shall now add a 750-ohm resistor R_e in the emitter circuit in Fig. 7(a) and again calculate the variation in I_C.

If I_B is still 40 μa when I_{CBO} is 5 μa, then I_C is still 2255 μa. I_E is then $2255 + 40 = 2295$ μa. The voltage drop across R_e is $I_e \times R_e = 2295 \times 10^{-6} \times 750 = 1.72$ volts. Remembering that the sum of the voltage drops around a circuit must in all cases equal the supply voltage, the voltage across R_1 plus the base-emitter voltage drop must be equal to $2 - 1.72 = 0.28$ volt. Assuming that the base-emitter voltage is 0.1 volt, then the voltage across R_1 is 0.18 volt. Hence, R_1 must have a resistance of $0.18 \div 40$ μa $= 4500$ ohms, because otherwise I_B would not be 40 μa as assumed.

If I_E now increases because of an increase in I_{CEO}, the voltage drop

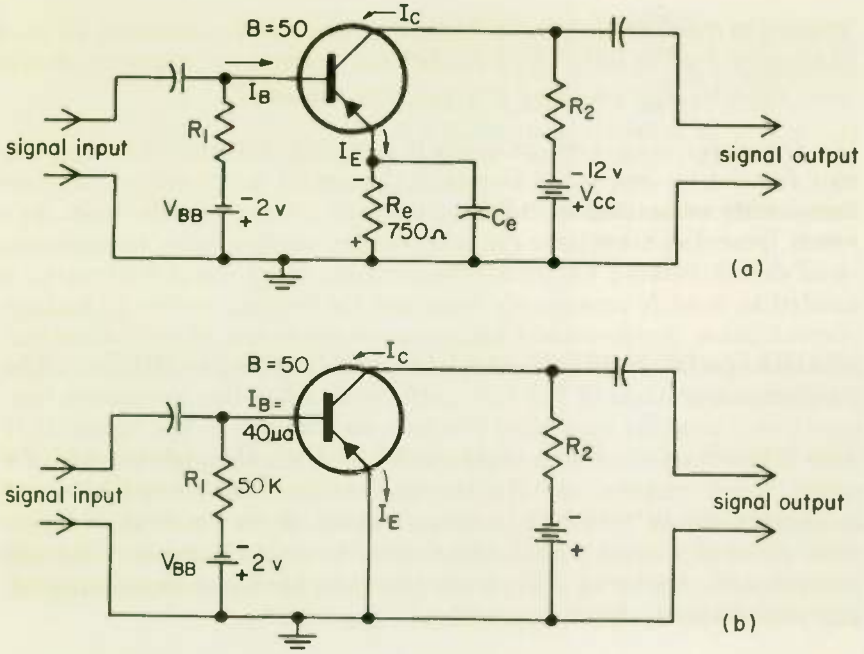

Fig. 7 **Stabilization using emitter resistor.**

across R_e will increase, thus reducing the voltage across R_1 and consequently reducing the base current I_B. The reduction of I_B will improve the temperature stabilization by keeping I_C from increasing in value as much as would otherwise be the case. When I_{CBO} increases to 30 μa, I_B reduces to 17.6* μa. Then

$$I_C = \beta I_B + I_{CEO}$$
$$= 50 \times 17.6\ \mu\text{a} + 1530\ \mu\text{a} = 2410\ \mu\text{a}$$

Hence, with R_e in the circuit, the value of I_C varies only from 2255 μa to 2410 μa, whereas without R_e the variation is from 2255 to 3530.

WHAT HAVE YOU LEARNED?

1. Show that 17.6 μa is correct for I_B in Fig. 7(a) when I_{CBO} is 30 μa, remembering that R_1 is 4500 ohms.

ANSWER

1. If 17.6 is correct, the sum of the total voltage drops across R_1, R_e, and the

---

*We do not show how this value is obtained since considerable math is required.

base-emitter will equal 2 volts, the value of V_{BB}.

$I_{CEO} = (\beta + 1)\, I_{CBO} = 51 \times 30 = 1530\ \mu a$

$I_C\ = \beta I_B + I_{CEO}$

$\quad = 50 \times 17.6\ \mu a + 1530\ \mu a = 2410\ \mu a$

$I_E\ = I_C + I_B = 2410 + 17.6 = 2427.6\ \mu a$

$V_{R_e} = I_E \times R_e = 2427.6 \times 10^{-6} \times 750 = 1.82$ volts

$V_{R_1} = I_B \times R_1 = 17.6 \times 10^{-6} \times 4500 = 0.08$ volt

Base-emitter voltage drop is 0.1 volt

$V_{BB} = V_{R_e} + V_{R_1} + V_{BE}$

$\quad = 1.82 + 0.08 + 0.1 = 2.00$ volts

6 STABILIZATION WITH SINGLE VOLTAGE SOURCE . . . The stabilization method of Fig 7(a) works well only when a separate battery V_{BB} is used for supplying the bias, as is shown in the figure. If I_B were taken from the much higher voltage of V_{CC} through the use of a much larger resistor for R_1, the temperature stabilization would be poor. However, by adding another resistor, R_2 in Fig. 8(a), it is possible to obtain good stabilization from a single battery. You will recognize the circuit of 8(a) as one that you have previously studied, and you should review its operation in Lesson 2404.

The reason the circuit of Fig. 7(a) does not give good stabilization when V_{BB} is high is that the voltage drop across R_1 is then high compared to the maximum voltage drop it is practical to have across R_e. That being the case, variations in voltage across R_e due to changes in leakage current have little effect on I_B, so that little stabilizing action occurs.

Figure 8(b) shows a tube circuit that corresponds to the transistor circuit of (a). In comparing the two circuits, notice in particular that the transistor stage requires far higher values for its capacitors than does the tube amplifier. This is because transistor circuits in general work with lower signal voltages and higher signal currents than do tube circuits. Or to say it another way, the impedances associated with transistor circuits are generally lower that those associated with tube circuits.

The purpose of all the capacitors in both diagrams of Fig. 8 is to pass the a-c or signal while blocking the d-c currents. To do this effectively, the signal voltage loss across the capacitor must be low compared to the amplitude of the signal voltage, so that the voltage loss is a small percentage of the signal. Since the voltage across a capacitor is given by $E_C = I \times X_C$, the higher the signal current, the greater the signal loss E_C will be. Also, if E_C is to be only a small percentage of the sig-

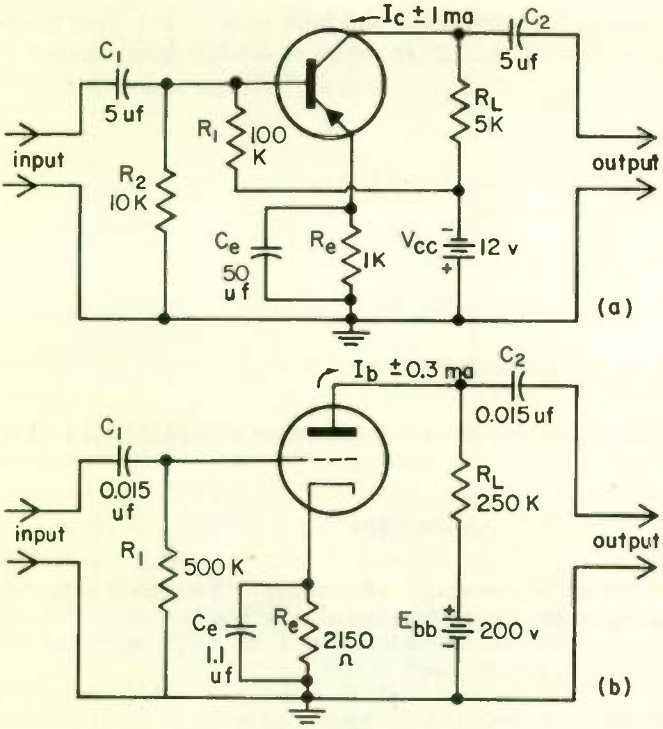

Fig. 8 A transistor audio amplifier stage compared to an electron tube stage.

nal voltage, *Ec* must be less for a capacitor in a transistor stage than in a tube stage, since in the latter the signal voltages used are higher.

The purpose of the following questions is to review and improve your understanding of the circuit of Fig. 8(a) and to compare its operation with that of the tube circuit in (b).

WHAT HAVE YOU LEARNED?

1. The d-c bias for the grid of a tube required for proper operation is obtained by applying a (a) *(voltage) (current)* to the grid. The bias (b) *(voltage) (current)* used by the grid is essentially zero. The d-c bias for the base of a transistor is obtained by applying a (c) *(voltage) (current)* to the base. The bias (d) *(voltage) (current)* used by the base is very low.

2. The bias for the grid in Fig. 8(b) is obtained from the voltage drop across component ______ .

3. The voltage source for producing the base bias in Fig. 8(a) is obtained from component (a) ______ .In order to set the bias current at the correct value, (b) ______________ is used in conjunction with this voltage.

4. What is the purpose of R_1 in Fig. 8(b)? (a) ______________________

Is there a d-c voltage drop across R_1? (b) ______

5. What is the purpose of R_2 in Fig. 8(a)? (a) ______________________

Is there a voltage drop across R_2? (b) ______

6. What resistors are involved in temperature stabilization in Fig. 8(a)? ____________

ANSWERS

1. (a) Voltage; (b) current; (c) current (d) Voltage . . . You bias the input to a tube by applying the proper bias voltage to the grid. The bias current is zero. You bias a transistor by adjusting the base current I_B to the proper value. The base emitter voltage is low, about 0.1 or 0.15 volt.
2. R_e 3. (a) Vcc (b) Resistance . . . R_1, R_2, and R_e are used in conjunction with Vcc to set the base bias current to the desired value.
4. (a) To provide a d-c path between grid and cathode, without which a tube will not function properly, and also to provide a path through which the bias voltage developed across R_e can be applied to the grid.
   (b) No . . . Negligible d-c current flows through R_1, and so there is no voltage drop across R_1.
5. (a) It helps provide temperature stabilization.
   (b) Yes . . . R_1 and R_2 are in series across Vcc. Hence, current will flow.
6. R_2, R_1, and R_e.

7 VOLTAGE FEEDBACK STABILIZATION . . . Another basic stabilization method, that of voltage feedback, is shown in Fig. 9(a). The base bias current is provided by feedback from the collector through R_1 and R_2. When the collector current increases because of the transistor warming up, the voltage drop across R_L, through which I_C must flow, increases. This will cause the collector voltage V_C to decrease, and consequently I_B to also decrease. The lowering of I_B reduces I_C, so that variations in I_C due to temperature changes are not as pronounced as they would be if I_B were obtained directly from Vcc.

We must prevent the signal on the collector from also feeding back through R_1-R_2 to the base, where it would cause degeneration. That is

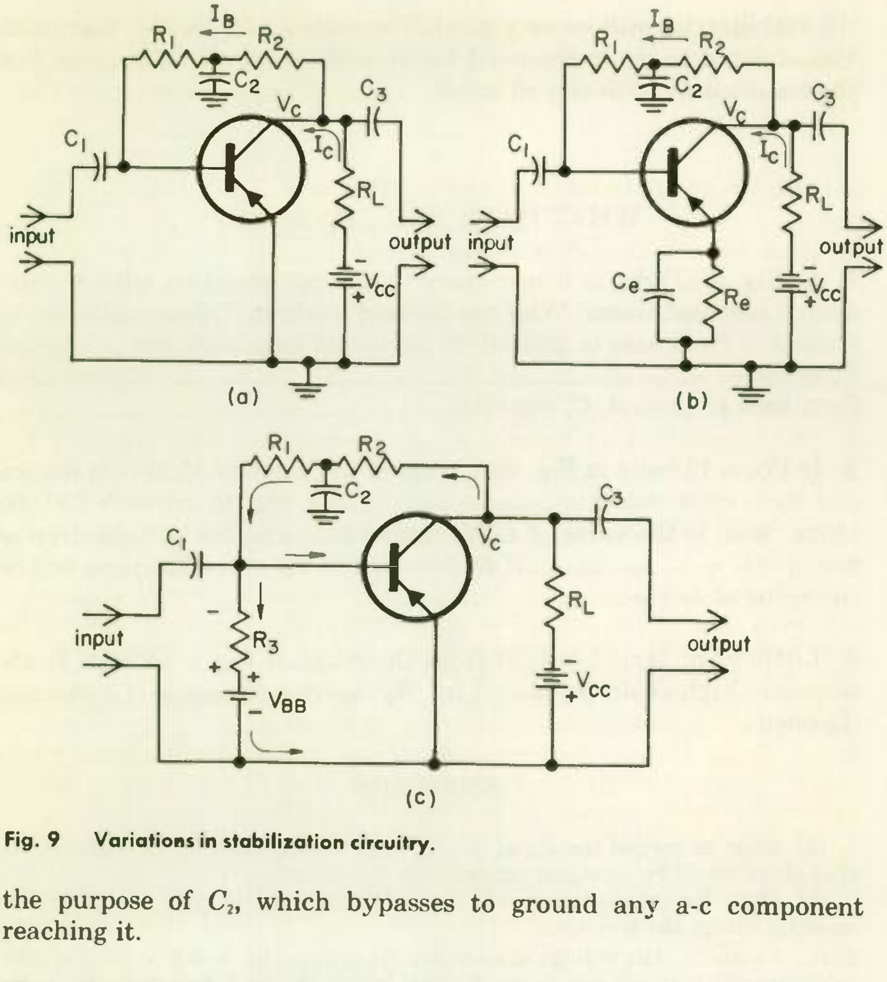

Fig. 9 Variations in stabilization circuitry.

the purpose of C_2, which bypasses to ground any a-c component reaching it.

The circuit of Fig. 9(a) gives rather poor temperature stabilization. One improvement is to use a combination of voltage and current stabilization as shown in Fig. 9(b). Another method is that of Fig. 9(c), where R_3 and V_{BB} are added to the basic voltage stabilization circuit of (a). Notice that V_{BB} is connected to the base-emitter junction in reverse bias. The voltage V_C in series with V_{BB} gives the current through R_2, R_1, and R_3 shown by the heavy arrows. The voltage drop across R_3 caused by this current flow must be slightly greater than V_{BB} in order to overcome the reverse bias of V_{BB}; otherwise, I_B would be zero.

Since the base-emitter resistance is low, small changes in V_C, and hence in the voltage across R_3, will make substantial changes in I_B. Hence, the stabilization will be very good. The same circuit is also used with V_{BB} omitted to avoid the need for an additional power supply, but the results are not nearly so good.

WHAT HAVE YOU LEARNED?

1. In Fig. 9(a) why is it necessary to use two resistors with C_2 connected between them? Why not instead connect C_2 from collector to ground or from base to ground? If connected from collector to ground, C_2 would (a) ______________________________. If connected from base to ground, C_2 would (b) __________________________.

2. If V_{CC} is 12 volts in Fig. 9(a), what is the value of V_C if I_C is 0.8 ma and R_L is 5000 ohms? (a) ____________ If R_1 and R_2 are each 250,000 ohms, what is the value of I_B, assuming base-emitter voltage drop as negligible? (b) __________ If I_C increases to 1.2 ma, what then will be the value of I_B? (c) ____________

3. Little or no signal output from the stage of Fig. 9(a) with I_C abnormally high could be caused by *(R_2 shorted) (R_2 open) (C_2 shorted) (C_2 open).*

ANSWERS

1. (a) Short to ground the signal output from the transistor at the collector, so that there would be no signal output from the collector.
(b) Short the incoming signal to ground at the base, so that there would be no output from the amplifier.

2. (a) 8 volts . . . The voltage drop across R_L is $I_C \times R_L = 0.8 \times 10^{-3} \times 5000 = 4$ volts. With 4 volts lost across R_L, that leaves $12 - 4 = 8$ volts for the value of V_C. I_B is ignored in finding V_C, as its effect is slight.
(b) 16 μa . . . 8 volts is applied to the base through R_1-R_2. The combined resistance of R_1 and R_2 is 500,000 ohms. Hence, the current is $8/500{,}000 = 16\ \mu$a.
(c) 12 μa . . . The voltage drop across R_L is $1.2 \times 10^{-3} \times 5000 = 6$ volts. $V_C = 12 - 6 = 6$ volts. $I_B = 6/500{,}000 = 12\ \mu$a.

3. R_2 shorted . . . Then C_2 connects V_C directly to ground, so the signal is shorted. I_C will increase because R_2, being shorted, increases I_B.

8 BIAS COMPENSATION . . . The methods of temperature stabilization discussed so far rely on some type of feedback to obtain stability. Another approach is to use in the circuit some component whose characteristics also vary with temperature, but in such a manner as to compensate for the changes in transistor characteristics.

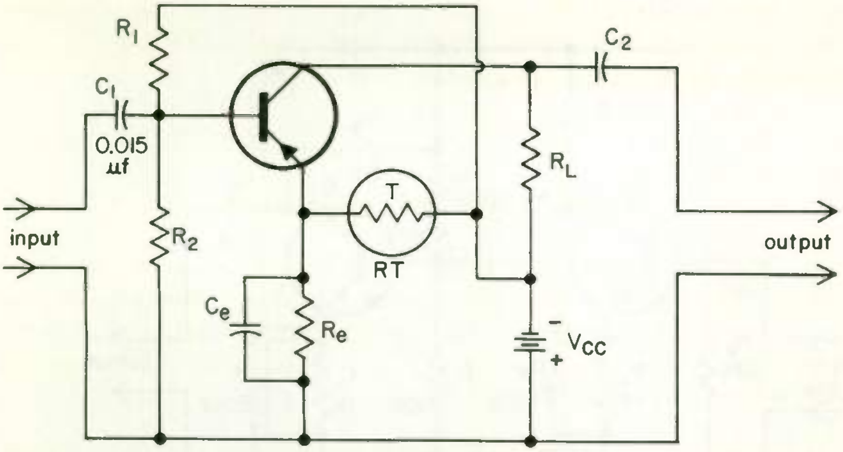

Fig. 10 Use of a thermistor for temperature compensation.

A thermistor is a commonly used bias compensation device. It is a resistor whose resistance changes with temperature, decreasing with an increase in temperature. In Fig. 10 thermistor *RT* has been added to the stabilization circuit of Fig. 8(a) to further improve the circuit stability. With an increase in temperature, the resistance of *RT* drops, increasing the current through R_e and therefore the voltage drop across R_e. Without *RT*, the circuit will only reduce the rise in I_C with temperature increase. It cannot eliminate the rise in I_C because the reduction in I_B is brought about by an increased voltage drop across R_e, which requires an increase in I_C. By using *RT*, the extra current needed through R_e to reduce I_B can come directly from *Vcc* through *RT*, without the necessity of I_C increasing.

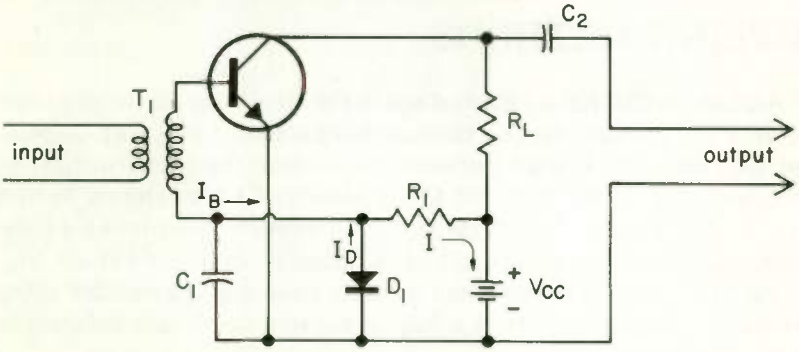

Fig. 11 Use of a diode for temperature stabilization.

The characteristics of an ordinary semiconductor diode change with temperature, and a diode is therefore suitable for bias compensation. An example of such use is given in Fig. 11. Diode D_1 is forward-biased

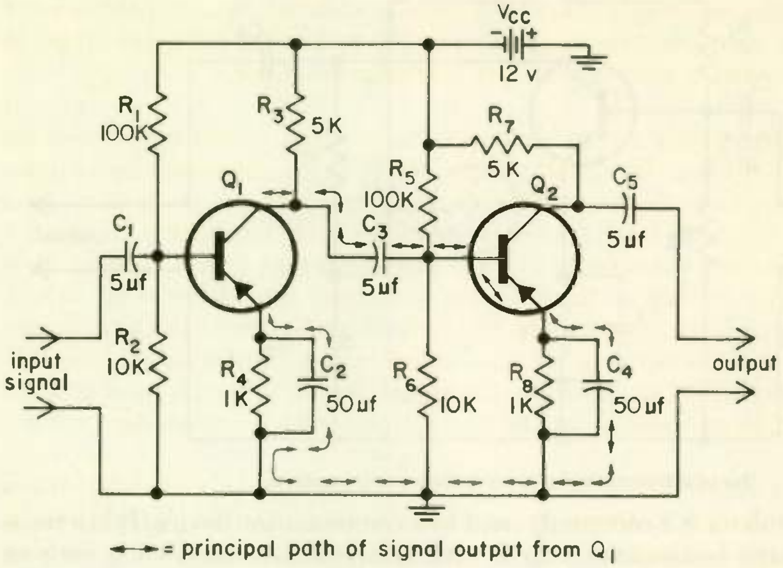

Fig. 12 Two-stage audio amplifier using capacitor (RC) coupling.

to V_{CC}. The current I through R_1 is equal to the sum of I_B and I_D, and it is essentially constant because R_1 has a high resistance compared to the resistance of D_1 or the base-emitter impedance. When the temperature increases, the resistance of D_1 decreases. As a result I_D becomes larger and I_B consequently smaller, so that temperature stabilization is obtained.

COUPLING METHODS

9 CASCADING STAGES . . . Each stage in the two-stage audio amplifier shown in Fig. 12 is identical to the amplifier stage of Fig. 8(a). Capacitor (or *RC*) coupling is used between the stages, the signal output of Q_1 being coupled to the input of Q_2 by means of C_3, as shown by the double-headed arrows. Except for the extra circuitry required for temperature stabilization and the use of different component values, Fig. 12 appears identical to a two-stage vacuum tube audio amplifier using capacitive coupling. However, it is important to note certain differences in operation.

If the base of Q_2 were replaced by the grid of a class A operated tube, the signal coming in would meet a nearly infinite resistance at the grid, so that only a voltage (no current) would come into the grid.

hus the preceding stage of a class A vacuum tube amplifier need urnish only a voltage (no power) to the grid of the following stage; in ther words, a tube is basically a voltage amplifier.

nstead of seeing a very high impedance, which would be the case for vacuum tube, the signal coming into Q_2 in Fig. 12 encounters a quite ow resistance, perhaps 1000 ohms, between base and emitter. As a esult the base-emitter resistance offers little opposition to current low, so that the strength of the signal current to the base of Q_2 is rimarily limited by the collector-to-emitter impedance of Q_1, which vill be perhaps 50,000 ohms. Since the signal current in the collector ircuit of Q_2 is equal to the base signal current multiplied by the current gain (β) of Q_2, we want the signal current into the base of Q_2 to e as high as possible for the best output from the amplifier.

rom another point of view, since the input to a transistor draws ignal current, it draws power from the signal source. A transistor is hus a power amplifier, and the greatest output is obtained by getting he maximum possible signal power into the input, which occurs when he input signal current is highest. You will remember that maximum ower is transfered from a source to a load when the impedance of he load is equal to the impedance of the source. In Fig. 12, Q_1 is a ignal source feeding the base of Q_2, which is the load. Since the collector-emitter impedance (called the output impedance) of Q_1 is about 0,000 ohms, the base-emitter resistance of Q_2 should also be about 0,000 ohms for the best gain from the amplifier. Since, in fact, the ase-emitter resistance is only about 1000 ohms, the amplifying efficiency of the simple *RC*-coupled amplifier of Fig. 12 is poor. Nevertheless, the circuit is widely used because of its simplicity.

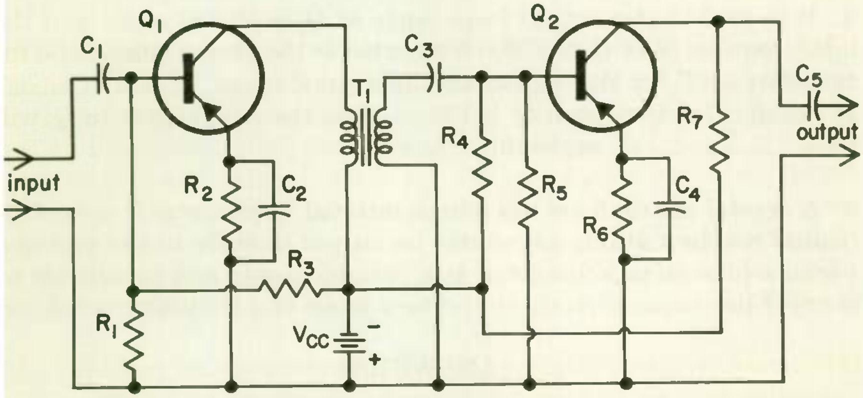

Fig. 13 Two stages of audio amplification using transformer coupling.

By the use of transformer coupling as shown in Fig. 13, the gain of a transistor amplifier can be much increased. By selecting the proper turns ratio for T_1, the output impedance of Q_1 can be exactly matched to the input impedance of Q_2 for maximum signal amplification. The transformer uses fewer turns on the secondary than on the primary, so that the secondary signal current is much higher than the primary signal current. Thus the signal current applied to the base of Q_2 is much higher than with *RC* coupling, and consequently the signal output from Q_2 is much greater.

WHAT HAVE YOU LEARNED?

1. Figure 12 shows all the signal output from Q_1 going to the base of Q_2. Actually, some of the signal will follow other paths, and thus be lost. Name those paths. ______________________________

____

2. Assume that Q_1 and Q_2 both have a current gain of 50. If a 4-μa signal is fed to the base of Q_1, the signal strength at the collector of Q_1 will be (a) _________ μa. If 25 per cent of the signal output from Q_1 is lost through the shunting paths referred to in Problem 1, the strength of the signal fed to the base of Q_2 will be (b) __________ μa. The signal strength at the collector of Q_2 will be (c) ______ μa. The overall current gain of the two-stage amplifier between the base of Q_1 and the collector of Q_2 is (d) _________.

3. If a smaller capacitor than shown is used for C_3 in Fig. 12, the overall gain of the amplifier will be reduced. Explain why.

4. If in Fig. 13 the output impedance of Q_1 is 50,000 ohms and the input impedance of Q_2 is 1000 ohms, what is the proper turns ratio for transformer T_1 for the highest amplifier gain? (a) ______________
If the signal output from Q_1 is 120 μa, then the signal input to Q_2 will be (b) __________ μa, neglecting losses.

5. A crystal microphone has a high internal impedance. It (a) *(would) (would not)* be suitable to connect its output directly to the grid of a vacuum-tube voltage amplifier. It (b) *(would) (would not)* be suitable to connect its output directly to the base input of a transistor amplifier.

ANSWERS

1. Some of the signal will shunt through R_6 directly to ground, and some will go

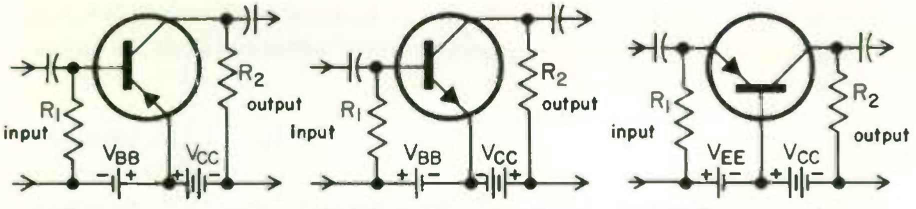

(a) PNP common emitter (b) NPN common emitter (c) PNP common base

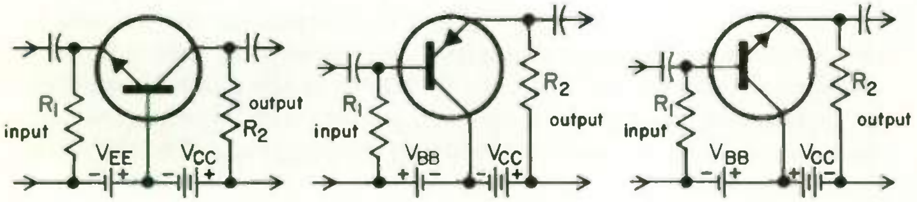

(d) NPN common base (e) PNP common collector (f) NPN common collector

Fig. 14 **Basic transistor configurations.**

through R_3 and R_5 and then through *Vcc* to ground. The greatest loss will be through R_3, because it has the lowest resistance. In addition, some signal will be lost through stray wiring capacitances and the internal capacitances of the transistors.

2. (a) 200; (b) 150; (c) 7500 (d) 1875 . . . $\frac{7500}{4} = 1875$

3. A smaller value of C_3 will have a higher reactance. This will make it harder for the signal from Q_1 to get through it. Hence, more of the signal will take the path through R_3, so that the signal reaching the base of Q_2 will be reduced.

4. (a) 1:7.07 . . . Remember that for impedance matching the turns ratio should equal the square root of the impedance ratio. The impedance ratio is 50,000/1000 = 50. $\sqrt{50} = 7.07$. (b) 848

5. (a) Would . . . Since the grid of a tube has a high input impedance, the impedance of the microphone is matched to the input impedance of the tube for good gain.

(b) Would not . . . Because of its very high internal impedance, very little current output can be obtained from a crystal microphone to feed the base of a transistor amplifier.

CONFIGURATIONS

10 METHODS OF CONNECTING TRANSISTORS . . . There are three basic methods by which transistors can be connected; they are known as the *common-emitter, common-base,* and *common-collector* con-

figurations. Since each of the three can be used with either NPN or PNP transistor types, there are six different arrangements, as shown in Fig. 14.

The most used configuration is the common-emitter of Fig. 14(a) and (b). It has been the connection method assumed in all the discussion so far in this lesson. It derives its name from the fact that one side of both the input and the output circuit is connected to the emitter lead. Similarly, in the common-base connection of (c) and (d) one side of both the input and the output circuit connects to the base, and in (e) and (f) one side of both the input and the output circuit connects to the collector. The common-emitter, common-base, and common-collector circuits are also respectively known as the grounded-emitter, grounded-base, and grounded-collector circuits. The latter names come from the fact that the common lead is typically grounded to the signal in practical circuits, although not necessarily grounded to d-c.

An important consideration in using any of the three configurations is to get the batteries hooked in with the correct polarity. The rule is simple enough: The collector-base junction must always be reverse-biased, and the emitter-base junction forward-biased. V_{CC} is connected correctly in every case if the polarity of the lead going to the collector is opposite the type of collector material. That is, in an NPN transistor, the collector is negative, and it should therefore be fed from the positive terminal of V_{CC}. In a PNP transistor the collector is positive, and it therefore connects to the negative side of V_{CC}. Note that all the circuits in Fig. 14 conform to this rule. In connecting the input circuit bias battery, V_{BB} or V_{EE}, connect P-type material to the positive battery terminal and N-type material to the negative battery terminal for common-base and common-emitter circuitry.

For a common-collector circuit connect the common collector to the terminal of V_{BB} that has the same polarity as the terminal of V_{CC} that is connected to the collector. Since the voltage of V_{CC} is greater than that of V_{BB}, the base-emitter junction is then forward-biased. To see this, refer to Fig. 15(a), where Fig. 14(f) is redrawn with only the circuitry that pertains to the base-emitter bias. The collector connection is not shown because it has nothing to do with the base-emitter bias polarity.

Figure 15(a) shows that the batteries are connected across the base-emitter junction. The two batteries are connected series bucking; that is, so that their voltages oppose each other. Hence, the total battery voltage is the diffierence between the voltages of V_{BB} and V_{CC}. Since

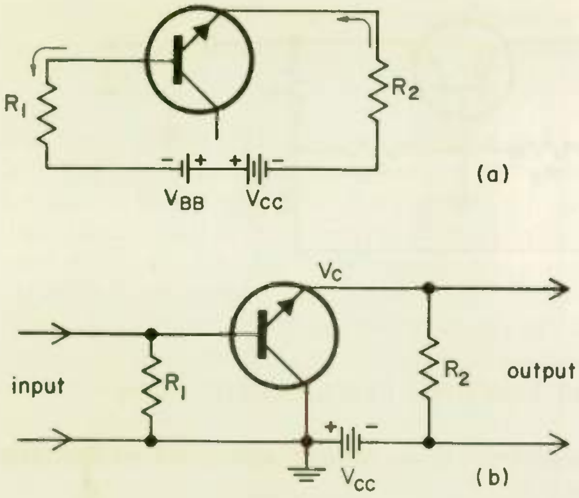

Fig. 15 (a) Common collector base-emitter biasing circuit. (b) Single battery biasing of common-collector circuit.

the higher-voltage battery will overcome the opposing voltage of the lower-voltage battery, the direction of current flow will be that indicated by the higher-voltage battery *Vcc*, as shown by the arrows. Thus the base-emitter junction is forward-biased.

It appears from Fig. 15(a) that the purpose of *V_{BB}* is to cut down the voltage used to form the base-emitter bias. If a larger value for R_1 is used, *V_{BB}* is not needed and a single battery can be used for all biasing needs. The single battery equivalent of Fig. 14(f) is shown in Fig. 15(b).

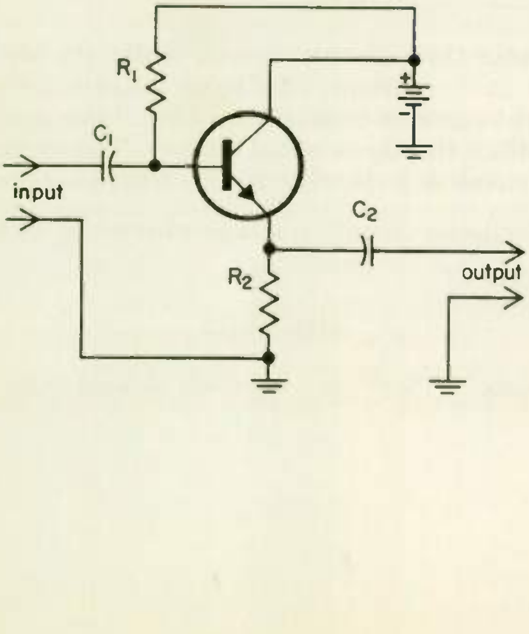

Fig. 16

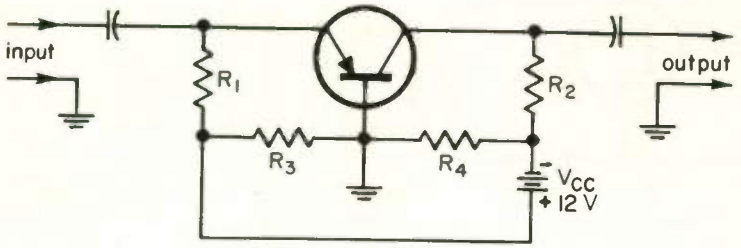

Fig. 17

WHAT HAVE YOU LEARNED?

1. You will often see one of the three configurations drawn similarly to Fig. 16. Which one is it? ______________________

2. Redraw Fig. 14(a) using a single battery for biasing.

3. Carefully compare Fig. 14(c) with (a). Why is it not possible to use the method of Problem 2 to obtain bias from a single battery?

4. Figure 17 is the equivalent circuit of Fig. 14(c) using a single bias battery. The voltage drop across component ___________ replaces the base-emitter biasing battery V_{EE} in Fig. 14(c).

5. You could increase the base-emitter bias current in Fig. 17 by *(increasing) (decreasing)* the value of R_4.

6. If a voltmeter connected across R_2 in Fig. 17 reads 5 volts, and one connected across R_4 reads 10.5 volts, then the voltage between collector and base is (a) ___________ volts, and the base-emitter biasing voltage across R_3 is (b) ___________ volts.

7. In a transistor the collector current is slightly less than the (a) ____________________ current. That being the case, the output signal current from the common-base circuit of Fig. 14(c) is (b) *(much more) (slightly less)* than the input signal current. The current gain of a common-base circuit is (c) *(between 25 and 100) (less than 1)*.

8. "Grounded-collector circuit" is just another name for the ________ ________________________ circuit.

ANSWERS

1. Common collector . . . The circuit is essentially identical to Fig. 15(b).
2. See Fig. 18.

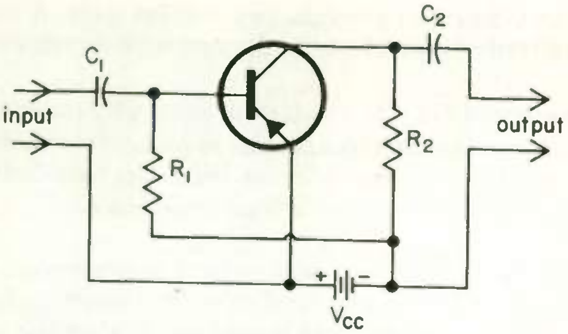

Fig. 18

3. In (a) both base and collector are fed from negative sides of voltage sources. In (c) the collector is fed from the negative side of the voltage source but the emitter is fed from the positive side. If connected similarly to Fig. 18, the emitter bias polarity would be wrong.
4. R_3 . . . R_3 with R_4 form a voltage dividing network across *Vcc*. The portion of the 12 volts that is across R_3 is the biasing voltage for the base-emitter junction.
5. Decreasing . . . This would increase the portion of the 12 volts of *Vcc* that is across R_3.
6. (a) 5.5 volts
   (b) 1.5 volts . . . $12 - 10.5 = 1.5$ V.
7. (a) Emitter . . . Remember that the emitter current is equal to the sum of the collector and base currents. However, since the base current is very low, the collector current is only slightly less than the emitter current.
   (b) Slightly less (c) Slightly less than 1 . . . the common-base configuration does not give any current gain. However, it can give voltage and power gain, as will be seen later.
8. Common-collector.

11 THE COMMON-COLLECTOR CONFIGURATION . . . The common-collector and common-base configurations are used in situations where their special characteristics are advantageous. Since the common-emitter circuit normally gives better gain than the other configurations, it is the one usually used.

The common-emitter circuit, as you have learned, is characterized by a good current gain, a low input impedance of perhaps 1000 ohms, and a high output impedance of perhaps 50,000 ohms. In contrast, a transistor connected in the common-collector configuration also has a good current gain, but a high input impedance of between 20,000 and 500,000 ohms and a low output impedance of a few hundred ohms. It is therefore used where a high input impedance and a low output impedance are desired. It is not generally as suitable as the common-emitter circuit because its typical power gain is only 100, while a power gain of 1000 to 10,000 can be provided by the common-emitter configuration. The reason for the low power gain is that the common-collector circuit cannot provide any voltage gain. A voltage gain of several hundred is possible with the common-emitter configuration.

An examination of Fig. 14(e) or (f) will show why the input impedance of the common-collector arrangement is high. Note that the incoming signal is applied to base and collector. Since the base-collector junction is reverse-biased by V_{BB}, it has a high impedance.

What do we mean by input and output impedances, as applied to amplifying devices? Ordinary conductors and resistors have set values of resistance that stay the same regardless of what the voltage or current may be. This is not true of tubes and transistors. Their resistances vary with the voltages and currents used. What we are interested in is the impedance offered to the *signal* under normal operation conditions.

Thus the input and output impedances are the impedances seen by the signal when suitable d-c supply voltages are used. You cannot find the output impedance by the simple Ohm's law formula, $R = E/I$, because R is not constant, but has a different value for normal operating values of E than it has for lower values of E. Instead, we use the formula

$$Z_{output} = \frac{\text{small change in collector voltage}}{\begin{array}{c}\text{collector current change resulting from}\\ \text{the change in collector voltage}\end{array}}$$

For example, suppose you increase the collector voltage Vc from 9 to 9.5 volts, and as a result the collector current increases from 1000 to 1010 μa. Since changing the collector voltage by 0.5 volt causes the collector current to change by 10 μa, the output impedance is

$$Zo = \frac{0.5}{10 \times 10^{-6}} = 50{,}000 \text{ ohms}$$

In using the above formula for finding Z_{output}, the base current must, of course, be held constant.

If a change in collector voltage has only a small effect on the collector current, as in the example just given, the output impedance is high. This is the case with the grounded-emitter circuit. The collector signal-current value, you will recall, is found by multiplying the base current by the current gain β of the transistor. As long as the collector voltage is within the limits in which the transistor works properly, it has such a small effect on the collector current that we ignore it in figuring the approximate value of the collector current.

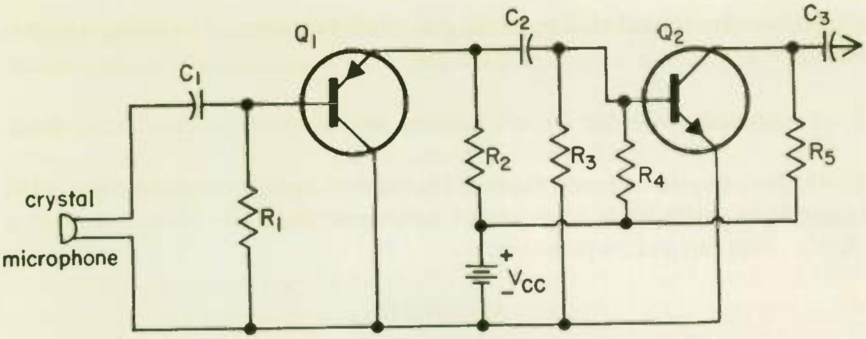

Fig. 19 Using a grounded-collector as an impedance-matching device.

In the common-collector circuit, the output is taken from the emitter, and a small change in emitter voltage will cause a substantial change in emitter current. Hence, the output impedance of this configuration is low; refer to Fig. 15(b). The voltage *Vc* (the voltage between emitter and collector) is impressed across R_1 (since the emitter-base voltage is negligible) and thus determines the base bias current. Any change in *Vc* will change the base current. This will cause a change in emitter current approximately equal to the change in base current multiplied by β, and it will thus be substantial.

Figure 19 shows an example of the use of the common-collector configuration. Problem 5 in Topic 9 brought out the point that a crystal microphone with its high internal impedance cannot be used satisfactorily as the input to a common-emitter amplifier. However, the input impedance to the common-collector stage Q_1 of Fig. 19 is high, and thus it matches the crystal microphone input for good power transfer. Also, the low output impedance of Q_1 matches the low input impedance of the grounded-emitter stage Q_2 for good power transfer. The grounded-collector stage Q_1 thus acts as an impedance-matching device to match the high impedance of the crystal microphone to the low input impedance of Q_2. A transformer could be used for the same purpose, but it would not have the good wide-range frequency response that the grounded-collector stage has.

WHAT HAVE YOU LEARNED?

1. In Fig. 13 a transformer is used to match the high-impedance output of Q_1 to the low-impedance input of Q_2. As a substitute for the transformer, you could use a transistor connected in the (a) ______________ configuration as an impedance-matching device. In a high-fidelity

amplifier why would this matching method be superior to using a transformer? (b) ____

2. A common-collector circuit cannot provide any ____________ gain.

3. If the output current from a transistor varies considerably with changes in voltage on the output terminal, then the transistor has a *(high) (low)* output impedance.

ANSWERS

1. (a) Common-collector . . . The high input impedance of the common-collector will match the high output impedance of Q_1, and the low output impedance of the common-collector will match the low input impedance of Q_2.

(b) A transformer will not respond nearly as well as the common-collector circuit to very low and very high audio frequencies.

2. Voltage 3. Low

12

THE COMMON-BASE CONFIGURATION . . . An examination of Fig. 14(c) and (d) shows that the input signal enters the emitter and the output signal leaves from the collector. Since the collector current is always slightly less than the emitter current, the output signal current is always slightly less than the input signal current. In other words, the grounded-base circuit provides no current amplification. It can, however, give voltage and power amplification.

The input impedance to the grounded-base circuit is very low, about 100 ohms, and the output impedance is very high, up to several megohms. When used as an audio amplifier, the common-base circuit gives a wider range of frequency response than does the common-emitter circuit, and it is therefore sometimes used in high-fidelity circuits.

The most important advantage of the common-base configuration is that the grounded base, being sandwiched between collector and emitter, reduces the internal capacitance of the transistor, much as the internal capacitance of a tube is reduced by the use of a screen grid grounded at the signal frequency. Thus the grounded-base circuit is much used as an r-f amplifier at very high frequencies. The corresponding triode vacuum-tube circuit is the grounded-grid amplifier, also used in the VHF range.

The grounded-base configuration does not usually require temperature stabilization circuitry.

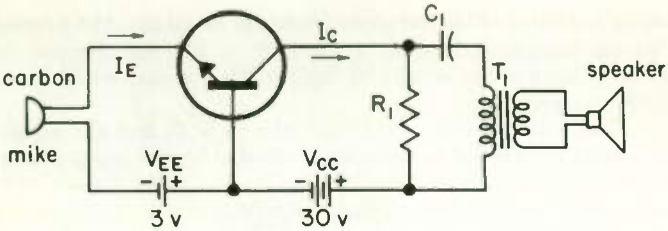

Fig. 20

WHAT HAVE YOU LEARNED?

1. A simple example showing practical use of the common-base circuit is the transistorized megaphone of Fig. 20. The carbon microphone has a resistance of 200 ohms and requires a d-c current through it of approximately 10 ma to work well. The transistor used should have an I_C value of approximately 10 ma. Speaking into the microphone varies the microphone resistance to values above and below 200 ohms, in accordance with the amplitude of the sound waves striking the diaphragm. This causes I_E to vary above and below its average or d-c value, thus producing an a-c input component, which is the signal to be amplified. The emitter-base impedance in Fig. 20 can be assumed to be approximately (a) ______ ohms. That being the case, the emitter bias current is approximately (b) ______ ma, and the collector current is approximately (c) ______ ma.

2. To get the best transfer of power from the microphone to the transistor input, the input impedance of the transistor should ideally be ______ ohms.

3. Why would it not be satisfactory to change the transistor connections in Fig. 20 to a grounded-emitter configuration?

4. Assuming that the primary winding impedance of T_1 is 2,000 ohms, the power gain of the transistor is ________ . (Ignore loss of signal through R_1.)

ANSWERS

1. (a) 100 (b) 10 . . . The resistance in series with V_{EE} is the 200 ohms of the mike plus the 100 ohms emitter base resistance, for a total of 300 ohms. $I = E/R = 3/300 = 0.01$ amp.

(c) 10 . . . In a transistor the collector current is always approximately the same as (actually, slightly less than) the emitter current.

2. 200 . . . To get the most power from a source to a load, the load impedance should be the same as the source impedance. Actually, a 200-ohms source feeding into a 100-ohm load, as in this case, is not enough of a mismatch to cause excessive loss.

3. Assuming a β value of 50 and since Ic should be 10 ma, the proper base bias current would be approximately 10 ma/50 = 0.2 ma. Hence, the current through the mike in series would be limited to 0.2 ma, which is not enough for satisfactory operation.
4. 20 . . . The input power to the transistor is $I_e^2R_i$, and the output power is $I_c^2R_o$. The power gain is the output power divided by the input power, or

$$G_p = \frac{Ic^2R_o}{I_e^2R_i}$$

Since I_c and I_e are approximately equal, they cancel, so that the power gain is $R_o/R_i = 2{,}000/100 = 20$.

CIRCUIT REFINEMENTS

13 PERFORMANCE IMPROVEMENT THROUGH INVERSE FEEDBACK . . . Negative (inverse) feedback is frequently used in transistor amplifiers to reduce distortion and increase the frequency response. It also improves the amplifier stability and reduces variations in overall gain caused by changes in transistor characteristics.

Energy fed from the output of an amplifying device back to the input may be either in phase or out of phase with the input signal. In-phase feedback (called positive feedback) increases the gain of the amplifier; and if it is sufficient, it will cause the amplifier to lapse into oscillations. Out-of-phase feedback (known as negative, or inverse, feedback), since its phase opposes the incoming signal, reduces the gain of the amplifier and prevents oscillations. Because of the loss of gain, an additional stage may be needed when inverse feedback is used, but the substantially improved performance sometimes justifies this disadvantage in using negative feedback.

The circuit of Fig. 21 is identical to that of Fig. 8(a) except that only part of the temperature stabilization resistance R_e in the emitter circuit is bypassed by C_e. The signal current as well as the d-c bias currents must pass through R_{e_1}. Hence a signal voltage develops across R_{e_1}. We have previously seen how the d-c voltage drop across R_{e_1} opposes the base bias voltage source and thus reduces the base bias current. Similarly, the a-c signal voltage developed across R_{e_1} opposes (that is, is out of phase with) the incoming signal voltage and thus reduces the signal current into the base.

Since the same incoming signal voltage now causes less base current, the base input impedance is obviously increased. For series voltage inverse feedback (the type being discussed) to be effective, the input

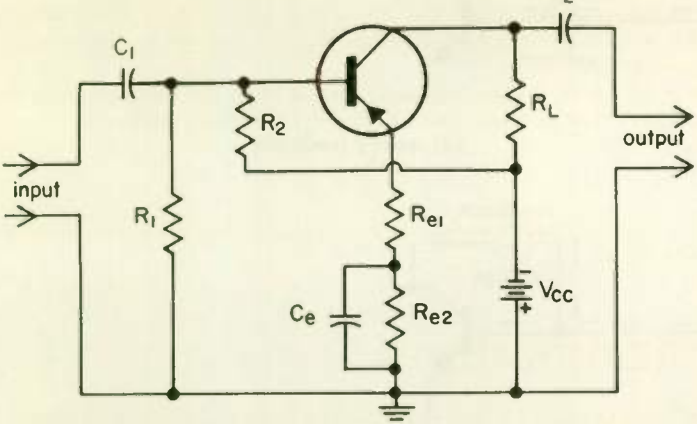

Fig. 21 Series or current inverse feedback.

signal must come from a low-impedance source. The signal current from a high-impedance source would only be slightly reduced by the increased base input impedance caused by the series feedback, and thus the feedback action is slight.

The shunt inverse feedback circuit of Fig. 22 is identical to the circuit of Fig. 8(a) except for the addition of R_3 to feed some of the signal voltage output from the collector back to the base. The feedback will be negative, since the output signal voltage from a common-emitter stage is out of phase with the input-signal voltage, just as the output-signal voltage from a vacuum tube is out of phase with the input voltage.

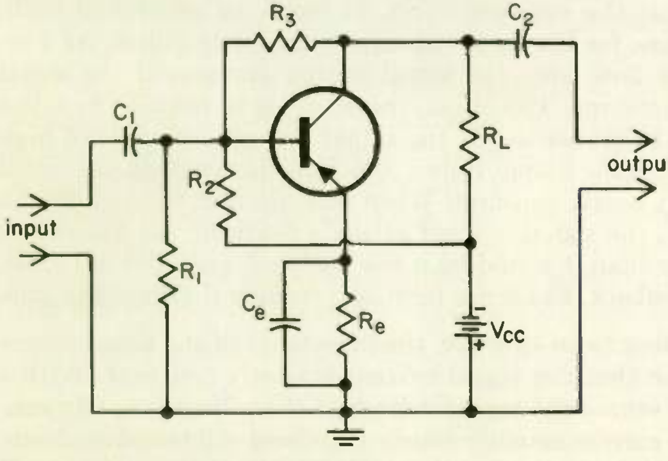

Fig. 22 Shunt or voltage feedback.

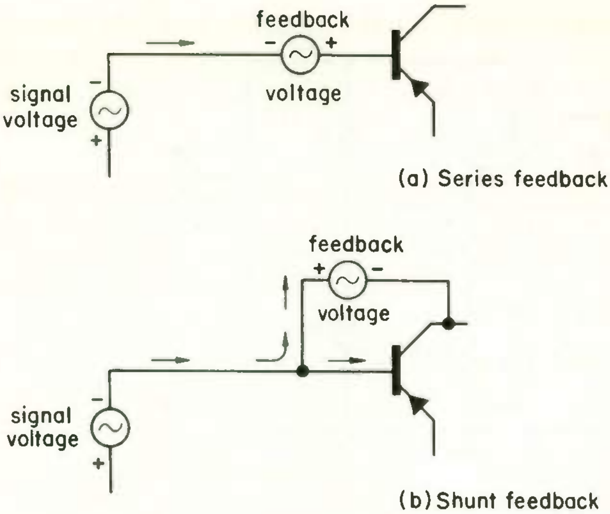

Fig. 23 **Comparing series and shunt feedback.**

14 OPERATING THEORY ... To see the significant difference between the series feedback of Fig. 21 and the shunt feedback of Fig. 22, refer to Fig. 23. Assume that part of the cycle when the incoming signal voltage has the polarity shown. The feedback voltage shown in (a) is that developed across the emitter resistor, and it has the bucking polarity shown. (Since the feedback voltage is in series with base and emitter, it makes no difference whether we show it as base circuit or emitter circuit.) It is in series with the signal voltage and, because of its opposing action, cuts down the signal current into the base to less than would be the case if the resistor were not there. The feedback circuit of (b) has the opposite effect. It forms an additional path, shunting the base, for the incoming signal current to follow. As a result the current flow from the signal source increases if the signal voltage stays constant. The effect, therefore, is to reduce the input impedance to the transistor. If the signal voltage source is of high impedance, such as the output from a common-emitter stage, the signal current will stay nearly constant. When this constant current divides as in Fig. 23(b), the signal current actually reaching the base to be amplified is less than it would be if the feedback path did not exist. Hence shunt feedback, like series feedback, reduces the amplifier gain.

For shunt feedback to be effective, the impedance of the signal source must be high, so that the signal current is nearly constant. With a low-impedance source the signal voltage in (b) will stay nearly constant. Then the current actually entering the base will be reduced only slightly by the shunt feedback voltage. The low-impedance source will nerely furnish additional current for the feedback path, the current o the base staying nearly the same as if the feedback voltage were ot present. Then the inverse feedback will have little effect on the peration of the transistor.

When inverse feedback works between input and output of individual tages, as in Figs. 21 and 22, it is called *local feedback*. Loop feedback s also used; then the signal is fed back to some preceding stage. In Fig. 24 signal from the collector of Q_2 is shown fed back to the emitter ircuit of Q_1 through R_5 and C_3.

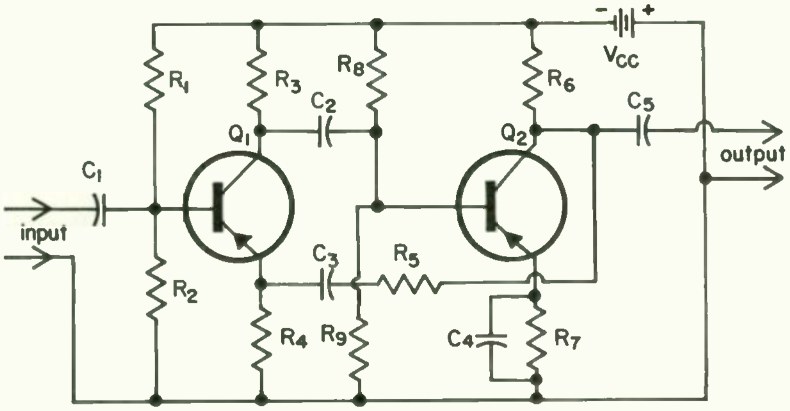

Fig. 24 **A two-stage amplifier with loop feedback.**

WHAT HAVE YOU LEARNED?

1. Oscillators are amplifiers that use *(positive) (negative)* feedback.

2. If you wanted to add negative feedback to the second stage of Fig. 12, you would use (a) *(series) (shunt)* feedback. For the second stage of Fig. 13, you would use (b) *(shunt) (series)* feedback.

3. The purpose of C_3 in Fig. 24 *(is) (is not)* to shift the phase of the signal fed back 180°, so that it provides negative feedback to Q_1.

4. Inverse feedback *(is) (is not)* sometimes used with oscillators to give better frequency stability.

ANSWERS

1. Positive 2. (a) Shunt . . . The signal source to Q_2 is the output of Q_1, which is a grounded-emitter stage with a high impedance. Shunt feed is more effective when the signal source is of high impedance.

(b) Series . . . The transformer coupling reduces the high-impedance output from Q_1 to a low impedance, which is best with series inverse feedback.
3. Is not . . . The most a capacitor could possibly shift the phase in any case whatsoever is 90°. The main purpose of C_3 is to block the d-c voltage on the collector of Q_2 to keep it off the emitter of Q_1. If the reactance of C_3 is small compared to the resistance of R_5, any phase shift caused by C_3 is small.
4. Is not . . . Inverse feedback would prevent the circuit from oscillating.

15 POWER AMPLIFIER STAGES . . . Transistors can be operated class A or class B. Class A is used where the primary objective is to obtain undistorted amplification of the signal and only a small power output is required. The circuits discussed so far in this lesson are operated class A. In class A operation the base bias current is set to a high enough value that base current flows throughout the signal cycle. That is, the peak value of the a-c signal current is less than the d-c bias current, so that the signal is never strong enough to reverse-bias the base-emitter junction and so cut off base current flow.

In class B operation the base bias current is set to either a small value or to zero. The incoming signal reverse-biases the base-emitter junction approximately one-half of each cycle, so that the base current is cut off (and therefore the collector current, except for leakage current) for approximately half of each cycle. As with tubes, class B transistor audio amplifier stages must be operated push-pull in order to prevent intolerable distortion.

Class A amplifiers draw current from the power source whether a signal is being amplified or not. Since a transistor power stage may draw several amperes of collector current, which is typically supplied from a battery, class B operation—in which the collector current is small if there is no signal—is much more conservative of battery power. Class B operation is therefore favored over class A operation in transistor power amplifiers. Another reason for using class B is that, as with tubes, greater power output can be obtained than with class A operation.

Figure 25 shows a power amplifier stage. The value of V_{BB}, of course, determines the class of operation. For class B operation V_{BB} may be zero, in which case there is no base bias. However, the use of a small bias current will help keep distortion low.

The use of the unbypassed resistors R_E in Fig. 25 reduces the current gain and the power output of the amplifier. However, they are needed with class B operation. One reason for their need is to prevent what is called *thermal runaway*. Because of the high power handled, power

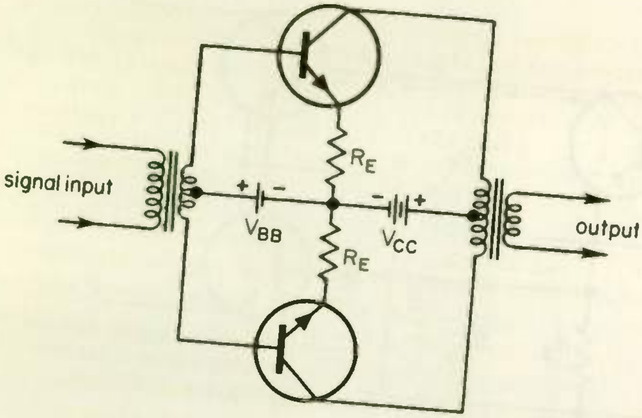

Fig. 25 A push-pull amplifier stage.

transistors generate much heat. Any increase in temperature due to the inability of the transistor to dissipate heat as fast as it is generated will increase the leakage current. Since the leakage current power is dissipated as heat in the transistor, the transistor temperature is further raised, and thus the leakage current is further increased. This action continues until the transistor is damaged or burned out by overheating.

The difference between R_E and the emitter resistor for temperature stabilization studied earlier in the lesson is that R_E is not bypassed, and therefore its action applies to the signal as well as to the d-c circuit. Since the d-c currents are always near zero (assuming class B operation) when there is no signal, thermal runaway is a problem related to signal amplitude. Any increase in leakage current during operation increases the voltage drop across R_E. Since R_E is not bypassed, this voltage drop opposes the base signal as well as the base bias current (if any). As a result the base signal current, and consequently the power input to the transistors, is reduced, thus preventing thermal runaway.

There are other reasons for the use of the emitter resistors R_E. The most important of these is that it substantially reduces distortion in class B operation, particularly when the base bias current is zero. Also, the resistors compensate for differences in transistor characteristics due to manufacturing tolerances. Instead of using two R_E resistors as shown, only one is sometimes used, connected into the common lead to the two emitters. However, some of the advantage of the emitter resistance is lost by this method.

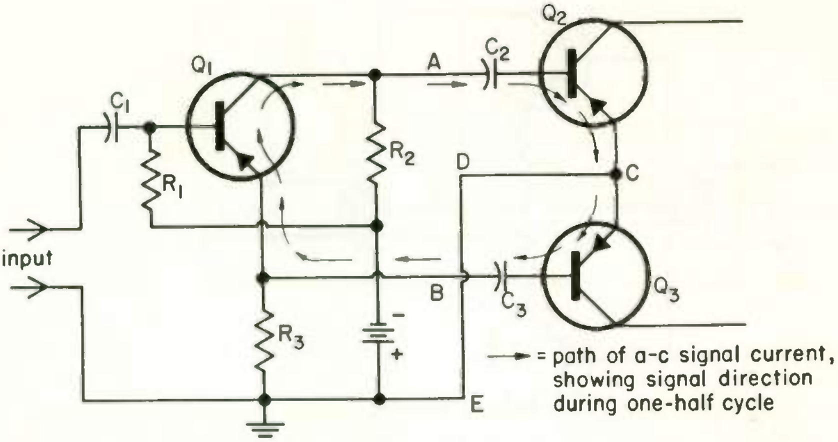

Fig. 26

WHAT HAVE YOU LEARNED?

1. If the audio signal to the base of a transistor never exceeds 10 ma effective value, what is the minimum value of base bias current that can be used for class A operation? ____________

2. The resistors R_E of Fig. 25 (do) (do not) produce inverse feedback.

3. The circuit of Fig. 26 uses phase-inverter stage, Q_1, in place of a transformer to feed a power amplifier stage. The purpose of the phase inverter is (a) *(to feed the signal to Q_2 180° out of phase from the signal to Q_3) (to reverse the phase so that inverse feedback is obtained)*. The principal signal current path between the output of the inverter and the input of the push-pull stage is shown by arrows. The arrows point in the direction of signal current flow during one-half of each cycle. The direction is, of course, opposite during the other half cycle. The signal current at point *A* (b) *(is) (is not)* in phase with the signal current at point *B*. The signal current at the base of Q_2 is out of phase from the base current of Q_3 because (c) ________________________________. The push-pull stage of Fig. 26 is evidently operating (d) *(class A) (class B)*.

4. Study the circuit of Fig. 26 and see if you can determine why resistor R_3 is necessary.

ANSWERS

1. 14.1 ma . . . So that the base will not be reversed-biased at any part of the

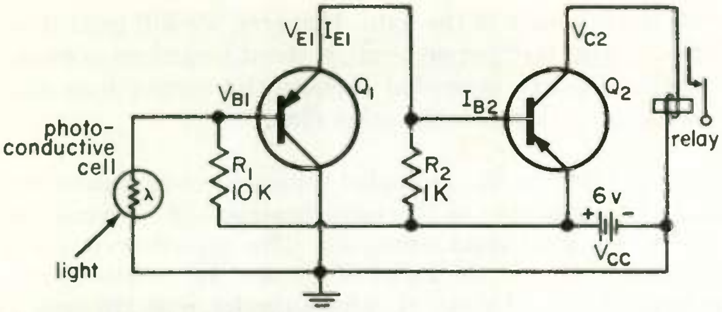

Fig. 27 A simple d-c amplifier circuit.

cycle, the d-c base bias current must be at least equal to the peak value of the signal current. 10 × 1.41 = 14.1 ma, the peak signal current. With a d-c bias current of 14.1 ma, the base current will then vary during the cycle from a minimum of 14.1 − 14.1 = 0 up to a maximum of 14.1 + 14.1 = 28.2 ma.

2. Do . . . R_E is equivalent to R_{e_1} of Fig. 21, which was shown to produce inverse feedback. Because of the inverse feedback, stage gain is reduced. The inverse feedback also reduces distortion, but that is not the primary reason for using R_E.

3. (a) To feed the bases out of phase. (b) Is . . . Points *A* and *B* are in series with respect to the signal path. The current in any part of a series circuit is always in phase with the current in any other part.

(c) When the signal current is flowing into the base of Q_2, it is flowing out of the base of Q_3. With respect to the bases of Q_2 and Q_3, the direction of current flow is therefore always opposite. Two currents always flowing in opposite directions are 180° out of phase.

(d) Class A . . . Otherwise base-emitter of Q_3 would be reverse biased by signal shown, and not conduct. (Base biasing circuit not shown.)

4. If resistor R_3 were not in the circuit to block the signal, most of the signal, rather than following the path shown through Q_3, would flow from *C* to *D* to *E* and then back to the emitter of Q_1.

16 D-C AMPLIFIERS . . . Transistors are widely used as variable resistors or switches. A simple example is shown in Fig. 27. The resistance of the photoconductive cell is very high, but it greatly reduces when light strikes the cell. When no light strikes the cell, the base emitter junctions of Q_1 and Q_2 have zero bias, so there is no base current. The collector current flow is then limited to the leakage current, which is not sufficient in Q_2 to close the relay contacts. When light strikes the cell, the effect caused by the change in cell resistance is amplified by Q_1 and Q_2 to give a Q_2 collector current adequate to close the relay contacts. That is, the circuit acts as a switch; the collector current through Q_2 switches from essentially zero when the photocell is dark to full value when light strikes the cell.

If the light striking the cell varies in intensity, the circuit will then function as a variable resistance, the collector current of Q_2 varying in accordance with the intensity of the light. However, we will treat it as a switch, where the light is either on or off, without variations in intensity. The amplifier circuitry is needed because the output from the photocell is inadequate to operate the relay direct.

Transistor Q_1 is operated in the grounded-collector configuration because the high input impedance of this configuration best matches the high resistance of the photoconductive cell. The capacitor coupling between the output of Q_1 and the input of Q_2 must be omitted, since the circuit is amplifying a d-c signal, which cannot pass through a capacitor. In other words, the circuit of Fig. 27 is that of a d-c amplifier.

To analyze the circuit of Fig. 27, we shall first assume that the light to the photocell is off. The resistance of the cell is then very high, and for the purpose of understanding Fig. 27, the cell can be considered as an open circuit. For base current flow in Q_1, the base-emitter junction must be forward-biased. That is, the potential V_{B_1} on the base must be lower than the potential V_{E_1} on the emitter. Assuming there is no base current, there is no current flow through R_1, and therefore no voltage drop across R_1. Then V_{B_1} is +6 volts. With no base current, I_{E_1} is the leakage current, which causes a negligible voltage drop across R_2. Hence, V_{E_1} is also +6 volts. Since the base is at the same potential as the emitter, the assumption of no base current was justified.

The voltage applied to the base-emitter junction of Q_2 is the voltage drop across R_2. Since this is negligible when the light to the photocell is off, there is no base-emitter bias current in Q_2, and the collector current is limited to the leakage current.

When light to the photocell is on, the cell has a far lower resistance, and it can no longer be considered as an open circuit. The cell resistance is in series with R_1 across the 6-volt supply, and the resulting current flow can be determined by Ohm's law. This current causes a voltage drop across R_1, so that V_{B_1} is now at a potential of less than +6 volts. Now the base is at a lower potential than the emitter, so that base current flows. As a result emitter current flows through R_2.

WHAT HAVE YOU LEARNED?

1. If the current through R_2 in Fig. 27 is 0.2 ma, the voltage drop across R_2 is (a) ________ volt. The base-emitter junction of Q_2, which is directly across this voltage drop, is (b) *(forward-) (reverse-)* biased. If the forward base-emitter resistance is 500 ohms, then the base current I_{B_2} is (c) ________ ma and the emitter current of Q_1 is (d) ________ ma. If the

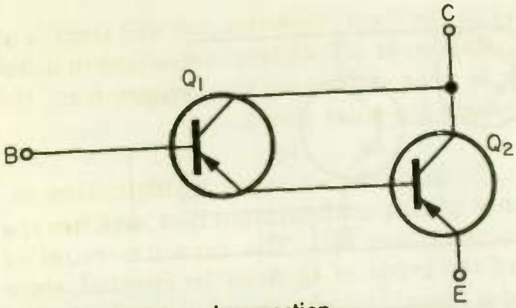

Fig. 28 Compound connection.

current gain of Q_2 is 40, what is the relay-winding current? (e) ________

2. Should the relay winding in Fig. 27 best be one with many turns or one with relatively few turns? ________

ANSWERS

1. (a) 0.2; (b) forward; (c) 0.4; (d) 0.6; (e) 16 ma
2. One with many turns so as to best match the high output impedance of Q_2 for maximum power transfer to relay coil.

17 COMPOUND-CONNECTED TRANSISTORS . . . When two transistors are connected to form a d-c amplifier as in Fig. 28, the unit forms the equivalent of a single transistor with base, emitter, and collector leads as indicated by *B*, *E*, and *C*. The unit can be connected into the circuit like a single transistor in either the common-base, the common-emitter, or the common-collector configuration.

Since the common-emitter configuration is most common, it is the only one we shall discuss. Its current gain is approximately the product of the current gain of the individual transistors. Thus if Q_1 and Q_2 each have a gain of 30, the gain of the compound-connected unit is 30 × 30 = 900. The input impedance is much higher than that of a single common-emitter stage.

An example of the common-emitter circuit is shown in Fig. 29. Light striking the photoconductive cell varies the resistance of the cell and thus varies the base current to Q_1. The variations in base current are amplified by Q_1 to form amplified variations in the collector current, and therefore in the emitter current, of Q_1. These amplified variations in the emitter current of Q_1 are fed to the base of Q_2. In Q_2 the variations are again amplified to form large variations in load current in conformity with the small variations in photocell current. The emitter current of Q_1 forms the base current of Q_2, and Q_2 must therefore be a

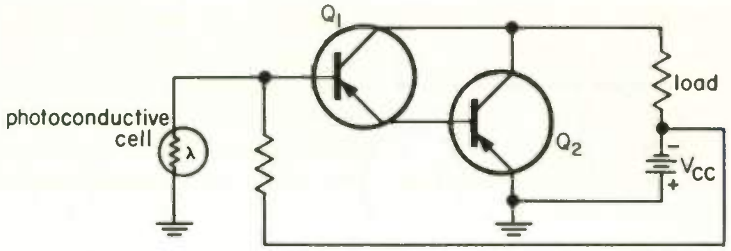

Fig. 29 Compound connection in the common-emitter configuration used as a d-c amplifier to amplify the output from a photoconductive cell.

power transistor intended for relatively heavy current, so that its normal base bias current is equal to the normal emitter current of Q_1.

TRANSISTOR CIRCUIT LIMITATIONS

18 TRANSISTOR NOISE . . . Although they have been much improved in recent years, transistors still tend to develop more internal noise than tubes do. In low-signal circuits, such as a preamplifier or the front end of a receiver, consideration should be given to methods of keeping the noise level down.

The internal noise generated can be substantially reduced by operating the transistor so that the collector voltage and collector current (particularly the voltage) are low. The collector current should best be kept below 1 ma and the collector voltage below 2 volts in low-signal circuits.

Signal frequency affects noise. Frequency-wise the noise level reduces steadily as frequency is increased up to a point above which the noise level starts to increase slowly again. Overall noise level in an audio amplifier can be improved by keeping the low-frequency cutoff as high as permissible; low-noise d-c amplifiers are difficult to design.

Feeding a transistor from a high-impedance source increases the noise level. The ideal impedance for the signal source is between 100 and 3000 ohms for most transistors.

19 DRIFT IN D-C AMPLIFIERS . . . Since d-c amplifiers cannot use coupling capacitors to separate the signal from the d-c operating currents, any variation in collector current of one stage due to temperature

change is passed on to the base of the following stage, where it is amplified to become a big change in the collector current of that stage. This current drift is a serious problem with d-c amplifiers, so that more extensive bias stabilizing circuits and compensation schemes must be used than are necessary with *RC*- or transformer-coupled amplifiers. This is particularly true if more than two stages of d-c amplification are required.

20 HIGH-FREQUENCY PERFORMANCE OF TRANSISTORS . . . The gain from a transistor decreases as the operating frequency increases. If the frequency increases enough, a point is reached where the current gain β of the grounded-emitter configuration has decreased to a value of 1. The point is called the *unity-gain cutoff frequency.* The transistor is now useless in the circuit, since it no longer amplifies.

A more practical upper limit for transistor operation is the frequency at which the gain β of the grounded-emitter configuration falls to 70.7 per cent of its low-frequency value. This point is called the *beta cutoff frequency.* If the grounded-base configuration is used, it may be practical to operate the transistor at a higher frequency. The frequency at which the current gain for the grounded-base configuration falls to 70.7 per cent of its low-frequency value is called the *alpha cutoff frequency.* Values for alpha cutoff vary from a fraction of a megacycle up to several thousand megacycles.

There are two basic reasons for the decrease in gain at high frequencies: *transit time* and *interelectrode capacitance.* Transit time refers to the time required for the charge carriers to travel between emitter and collector through the base region. At low frequencies this time is only a small part of the time of a cycle, and thus it is insignificant. At high frequencies it becomes a substantial part of a cycle.

To see how transit time affects operation, consider the extreme case in which the time required for charge carriers to cross the base region is more than one-half cycle. Then the signal component of the base current is reversed in polarity while charge carriers that started across the base region in response to the opposite polarity are still in transit. The base signal polarity reversal charges up the base region so as to repel these charge carriers back toward the emitter. As a result, there is no signal output from the transistor.

Interelectrode capacitance offers an alternate path through which the signal can bypass and thus not be amplified.

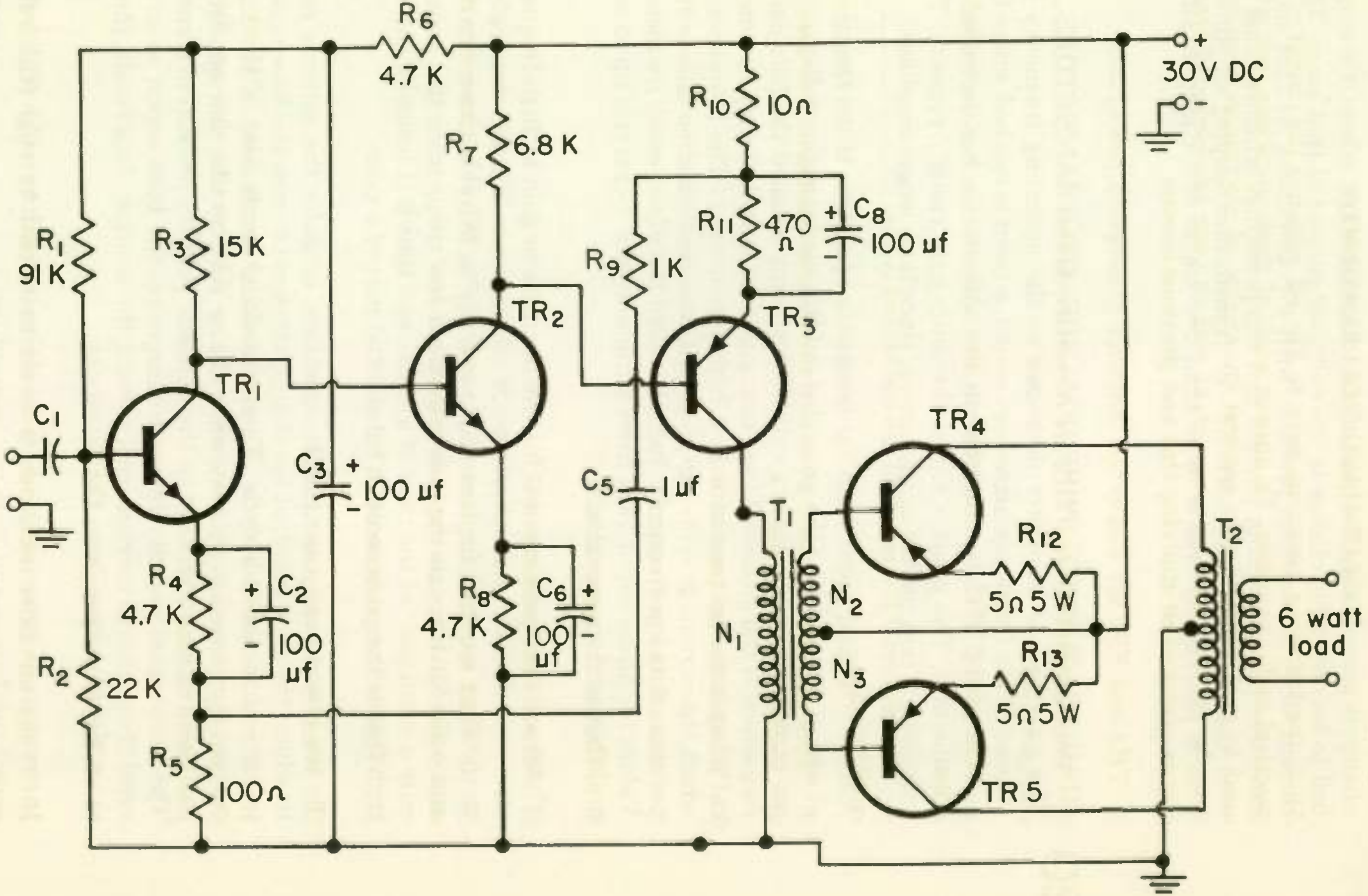
R6
4.7 K
+
30V DC
-
R10
10Ω
R7
6.8 K
R11
470 Ω
+
C8
-
100 uf
R9
1 K
R1
91 K
R3
15 K
TR2
TR3
TR1
C1
TR4
C3
+
-
100 uf
C5
1 uf
T1
R12
5Ω 5 W
T2
R4
4.7 K
+
C2
-
100 uf
R8
4.7 K
C6
+
-
100 uf
N2
N1
6 watt load
N3
R13
5Ω 5 W
R2
22 K
R5
100Ω
TR 5

Fig. 30

WHAT HAVE YOU LEARNED?

All of the following questions refer to Fig. 30, which is the circuit of a practical audio amplifier. To answer some of these questions, you will need to make use of your general knowledge of electronics acquired thus far in your training program, as well as your knowledge of transistors acquired in studying this and previous lessons.

1. TR4 and TR5 are connected *(parallel) (push-pull) (push-push).*

2. Transistors TR1 and TR2 are connected in the ______________ configuration.

3. Transistor TR3 is connected in the ______________ configuration.

4. Transistors TR4 and TR5 are connected in the ______________ configuration.

5. This amplifier (a) *(does) (does not)* use inverse feedback. If it does, is the feedback local or loop? (b) __________

6. What is the purpose of R_9?

7. What is the purpose of C_5?

8. What is the purpose of R_8?

9. What is the purpose of C_6?

10. (a) What are the purposes of R_{12} and R_{13}? (b) Why do these two resistors not have bypass capacitors across them?

11. What is the purpose of R_5?

12. What is the purpose of R_{10}?

13. If you removed resistor R_2, you could properly bias TR1 by (a) *(increasing, decreasing, removing)* R_1. (b) Why would this not be a good way to bias TR1?

14. What is the purpose of C_3?

15. If the amplifier oscillates, it could be caused by *(C_2) (C_5)* being open.

16. Name another capacitor that, if open, might cause the circuit to oscillate. ______

17. Low gain from the amplifier *(could) (could not)* be caused by capacitor C_6 being open.

18. By what type of coupling is the output of TR1 coupled to the input of TR2? ________

19. The push-pull stage uses *(class A) (class B)* operation.

ANSWERS

1. Push-pull 2. Common-emitter
3. Common-emitter . . . Notice that the coupling to the following stage (by means of T_1) is taken from the collector stage and that the input is to the base. This is the operational pattern of a common-emitter stage. The common-collector configuration also has its input to the base, but the coupling to the next stage (that is, the load) is taken from the emitter circuit.
4. Common-emitter
5. (a) Does (b) Loop . . . The feedback is from TR3 back to TR1 by means of R_9 and C_5.
6. It prevents an excessive amount of feedback.
7. To block the 30-volt d-c supply, so that there will not be a d-c power loss through R_9 and R_5 to ground.
8. It provides temperature stabilization for TR2.
9. It bypasses the signal, so that it will not be attenuated by R_8.
10. (a) The most important purposes are to prevent thermal runaway and to reduce distortion.
    (b) So that the signal current to the base will be reduced by an increase in leakage current.
11. It is part of the loop feedback system. The signal developed across R_5 by feedback through R_9 and C_5 is out of phase with the emitter of TR1, thus giving inverse feedback.
12. The emitter signal of TR3 flows through R_{10} and thereby causes a signal voltage across R_{10}, since it is not bypassed. This voltage provides the loop feedback current through R_9 and C_5.
13. (a) Increasing . . . Since none of the current through R_1 is being shunted by R_2, the value of R_1 would have to be increased to limit the bias current to the normal value.
    (b) This would not be a good way to bias TR1 because without the stabilizing effect of R_2 a slight change in temperature would cause the collector current to change drastically.
14. C_3 in conjunction with R_6 forms a decoupling filter to prevent positive feedback to the first stage by way of the common power supply.
15. C_5 . . . This would remove the loop feedback. The resulting increase in amplifier gain might cause oscillations to occur. C_2 is not correct because, if it were open, degenerative feedback, which prevents oscillations, would occur.
16. C_3 . . . See Problem 14.
17. Could . . . This would give additional negative feedback, and thus lower gain.
18. Direct
19. Class B . . . Notice that there is no base bias voltage.

LESSON 2412-4

HOW TO WORK WITH TRANSISTORS

EXAMINATION

Circle the number of the correct answer for each question that follows. When you are finished, transfer the answers to the answer sheet by putting X's in the proper squares. When the graded answer sheet is returned to you, correct in this book any questions you may have missed. By doing so, you will have a record of the correct answers to all questions for review purposes.

1. A transformer used to match the output from one common-emitter stage to the input of another should
   (1) have high input and output impedances.
   (2) have low input and output impedances.
   (3) have a low input impedance and a high output impedance.
   (4) be a voltage step-down transformer.

2. In place of a transformer to match the output from one common-emitter stage to the input of another, you could substitute
   (1) a grounded-collector stage.
   (2) a grounded-emitter stage.
   (3) *RC* coupling.
   (4) a low value of collector for the first stage and a high value for the second.

3. Regardless of whether a transistor is operated common-emitter, common-collector, or common-base, the relationship between the currents in the transistor are as follows:
   (1) Collector current is slightly less than emitter current, and base current is far less.
   (2) Collector current is slightly more than emitter current, and base current is far less.
   (3) Collector current is far more than base current, and emitter current may be either more or less than collector current, but never the same.
   (4) Emitter current is equal to the collector current minus the base current.

4. The amplifier stage of Fig. 31 uses
   (1) temperature stabilization circuitry and shunt inverse feedback.
   (2) temperature stabilization circuitry and series inverse feedback.
   (3) temperature stabilization circuitry without signal feedback.
   (4) temperature stabilization and low-frequency compensation circuitry.

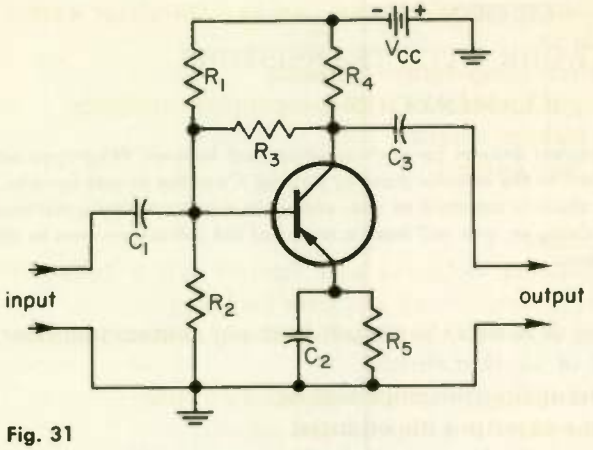

Fig. 31

5. If oscillations occur in Fig. 31, it might be because
   (1) C_2 is open.
   (2) R_5 is shorted.
   (3) R_3 is open.
   (4) R_3 is shorted.
   (5) R_4 is open.
   (6) R_4 is shorted.

6. In Fig. 22 inverse feedback could be eliminated without in any way interfering with d-c base biasing and temperature compensation by
   (1) adding a capacitor in series with R_3.
   (2) removing C_e.
   (3) shunting a capacitor across R_1.
   (4) shunting a capacitor across R_3.
   (5) connecting a capacitor between center point of R_3 and ground.
   (6) connecting a capacitor between collector and ground.

7. Diodes are sometimes used in transistor amplifier circuits to
   (1) protect the transistor against heavy surge currents.
   (2) improve temperature stabilization.
   (3) protect the base-emitter junction from reverse bias.
   (4) reduce distortion.

8. If varying the load impedance makes little change in the value of load current, then the load current source
   (1) is probably a step-up transformer.
   (2) is probably a step-down transformer.
   (3) has a high impedance.
   (4) has a low impedance.
   (5) is probably overloaded.

9. The increase in collector current that occurs as a transistor warms up is primarily due to
(1) β increasing when temperature increases.
(2) lowering of output impedance with temperature increases.
(3) an increase in leakage current.
(4) an increase in base current.

0. The symbol I_{CEO} means
(1) current flow between collector and emitter when collector-base junction is reverse-biased and base lead is open.
(2) collector current flow when reverse-biased and emitter junction is open.
(3) collector-emitter leakage current with emitter open.
(4) collector-emitter current with no input signal.

11. Why are transistors amplifying low signal levels frequently operated with low collector current and low collector voltage?
(1) To reduce noise.
(2) To prevent oscillations.
(3) To reduce distortion.
(4) To improve temperature stabilization.
(5) To prevent overheating.

12. What is meant by the beta cutoff frequency?
(1) The frequency at which a transistor no longer amplifies.
(2) The frequency at which a transistor in the grounded-emitter configuration no longer amplifies.
(3) The frequency at which the gain in a grounded-emitter configuration drops to 70.7 per cent of its low-frequency value.
(4) The frequency at which the gain of a grounded-base stage becomes greater than the gain from a grounded-emitter stage.

13. If you were to add negative feedback to the second stage of Fig. 13, you could best use
(1) series feedback.
(2) shunt feedback.
(3) a combination of series and shunt feedback.

14. To obtain better gain in high-frequency operation, it is common to
(1) use d-c coupling.
(2) use the common-base configuration.
(3) use inverse feedback.
(4) have a substantial impedance mismatch between stages.

Fig. 32

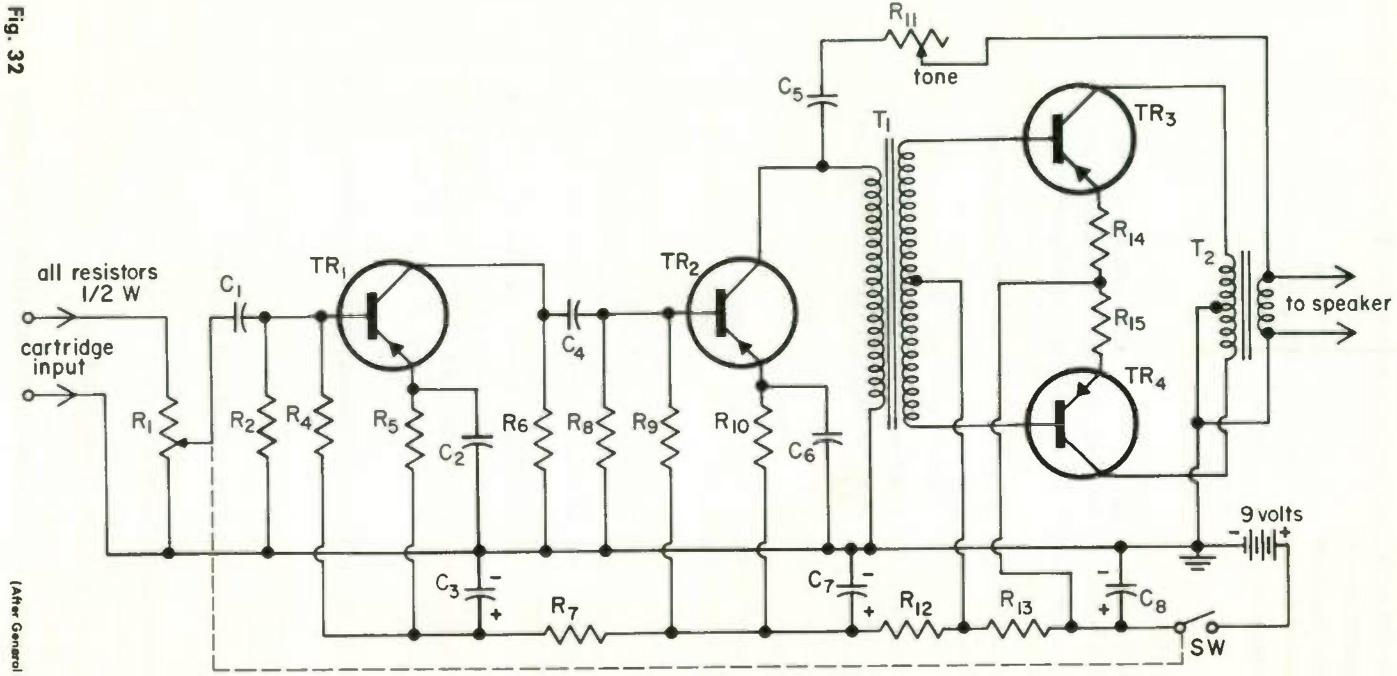

R_1, ...	5000 OHM VOLUME CONTROL 1/2 W AUDIO TAPER
R_2, ...	150,000 OHM
R_4, ...	10,000 OHM
R_6, R_9, . .	4700 OHM
R_7, ...	1000 OHM
R_8, ...	33,000 OHM
R_{11}, ...	25,000 OHM LINEAR
R_{12}, ...	220 OHM
R_5, R_{10}, . .	470 OHM
R_{13}, ...	47 OHM
R_{14}, R_{15}, ...	8.2 OHM
C_1, C_3, C_7, C_8,	50 μfd, 12V
C_2, C_6, ...	50 μfd, 3V
C_4, ...	15 μfd, 12V
C_5, ...	.02 μfd
TR_1, TR_2, ...	G. E. 2N323
TR_3, TR_4, ...	G. E. 2N1415
TR_1, ...	5K/3K CT
T_2, ...	200 C.T./V.C.

(After General Electric's Transistor Manual)

15. Figure 32 is the circuit of a phono amplifier. Transistors TR3 and TR4 are operated
    (1) grounded-emitter.
    (2) grounded-collector.
    (3) grounded-base.

16. In Fig. 32 TR1 and TR2 are operated
    (1) grounded-emitter.
    (2) grounded-collector.
    (3) grounded-base.

17. In Fig. 32 capacitor C_4 is 15 μf, while the value of a corresponding coupling capacitor in a tube circuit would perhaps be 0.02 μf. Why is C_4 so large?
    (1) To avoid excessive signal loss, its reactance must be much lower than the low input impedance of TR2.
    (2) A large value is needed for adequate decoupling, so that positive feedback from TR2 to TR1 will not cause oscillations.
    (3) The high value nearly resonates the input circuit of TR2 to give better impedance match, better gain, and better low-frequency response.
    (4) To avoid phase shift, and thus distortion, of the signal.

18. Assuming that C_4 in Fig. 32 is an electrolytic capacitor, should its positive or its negative lead be connected to the collector of TR1?
    (1) Positive lead.
    (2) Negative lead.
    (3) It would make little or no difference.

19. Should the positive or negative lead of electrolytic capacitor C_2 in Fig. 32 be connected to ground?
    (1) Positive lead.
    (2) Negative lead.
    (3) It would make little or no difference.

20. With reference to the push-pull final stage of Fig. 32
    (1) the base-emitter junctions of TR3 and TR4 are not biased, so that the stage must be operating class B.
    (2) the voltage across R_{13} supplies base-emitter bias, so the stage must be operating class A.
    (3) the stage may be operating either class A or class B, but the unbypassed emitter resistors R_{14} and R_{15} indicate that operation is probably class B.
    (4) Same as selection 3, except that operation is probably class A.

21. What is the purpose of C_3 in Fig. 32?
    (1) To provide a path to ground for the signal component of the emitter current.
    (2) To help absorb voltage surges so they will not damage the transistor.
    (3) It is part of the inverse feedback path, and it is used to block the d-c component.
    (4) In conjunction with R_7 it forms a decoupling filter to prevent positive feedback to TR1 from a later stage.

22. What is the purpose of R_9, Fig. 32?
    (1) It prevents the base from blocking by providing a base-to-emitter discharge path.
    (2) Signal coming through C_4 is developed across it and then applied to the base.
    (3) It enables the circuit to respond to lower frequencies.
    (4) It is part of the temperature stabilization network.

23. Why is it that signal-bypass capacitors are not used across R_{14} and R_{15}, Fig. 32?
    (1) To reduce intermodulation distortion.
    (2) To prevent the generation of harmonics.
    (3) To prevent thermal runaway by applying a temperature correction to the incoming signal through inverse feedback.
    (4) The capacitors are needed only in class A amplifiers.

24. Transformer T_1, Fig. 32, should have
    (1) more turns on secondary than on primary.
    (2) more turns on primary than on secondary.
    (3) primary turns equal to the number of secondary turns between center tap and one side.

25. Reduced gain without distortion in the amplifier in Fig. 32 could be caused by
    (1) open C_2.
    (2) open C_3.
    (3) open R_2.
    (4) shorted R_{14}.

26. Reduced gain accompanied by distortion in the amplifier of Fig. 32 could be caused by
    (1) shorted C_3.
    (2) open C_4.
    (3) open C_6.
    (4) shorted R_5.

27. Two transistors connected to perform as a single transistor would be
    (1) *RC*-coupled.
    (2) compound-connected.
    (3) cascaded.
    (4) transformer-coupled.

28. If a transistor stage has a good power gain with input and output signal currents approximately equal, then
    (1) the transistor is probably faulty, since a transistor should have a good current gain.
    (2) the stage is probably connected in the common-collector configuration.
    (3) the transistor is probably connected in the common-base configuration.
    (4) the transistor is probably operating with excessive base bias current.

29. The base region of a transistor is
    (1) very thin and lightly doped.
    (2) very thin and heavily doped.
    (3) specially treated to be a good conductor of opposite-type charge carriers; usually very thin.
    (4) usually thin and lightly doped with both donor- and acceptor-type impurities.

30. If the collector-base leakage current in a transistor with a current gain of 30 decreases by 6 μa, then the collector current of the transistor will (if no temperature stabilization is used)
    (1) increase by 6 μa.
    (2) decrease by 6 μa.
    (3) increase by 186 μa.
    (4) decrease by 186 μa.

31. Generally speaking, the most effective temperature-stabilizing circuitry is required with
    (1) single-stage amplifiers.
    (2) direct-coupled amplifiers.
    (3) high-frequency amplifiers.
    (4) transformer-coupled amplifiers.

END OF EXAM


CLEVELAND INSTITUTE OF ELECTRONICS

CLEVELAND INSTITUTE OF ELECTRONICS / CLEVELAND, OHIO

electronics

CLEVELAND INSTITUTE OF ELECTRONICS / CLEVELAND, OHIO

Using Semiconductor Diodes

2401-3

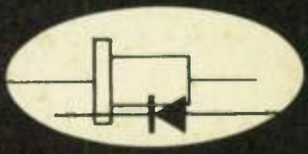

An AUTO-PROGRAMMED® Lesson

ABOUT THE AUTHOR

Fred E. Eberlin has spent the major part of his professional career in teaching, technical training, and technical writing. His classroom experience includes teaching at the industrial, college, and technical institute levels. He has also been responsible for the writing and editing of training material for the home-study student.

His practical experience includes two years as a Research Associate with the Antenna Laboratory of The Ohio State University. He has also worked at the Reliance Electric and Engineering Co. and the Lincoln Electric Co., both in Cleveland, Ohio.

Academically, Mr. Eberlin has earned both the B.S.E.E. and M.Sc. degrees in Electrical Engineering from The Ohio State University. While completing work for his Masters degree, he was employed as an Instructor in the Department of Electrical Engineering. He also taught in the Departments of Mathematics and Physics while working toward his B.S.E.E. degree.

On the technical institute level, Mr. Eberlin taught at the Columbus (Ohio) Institute of Technology. He also taught in the evening technical division of the Max Hayes Trade School, Cleveland, Ohio.

Mr. Eberlin was a Project Director on the Technical staff of the Cleveland Institute of Electronics. His major responsibility was the preparation of instructional material designed especially for the home-study student. While with the Institute, Mr. Eberlin wrote texts in physics, DC circuits, Diodes, and Transistors. All these texts utilize the principles of programmed learning.

Mr. Eberlin is now associated with the North American Rockwell Co.

He is a member of the IEEE.

This is an AUTO·PROGRAMMED* Lesson exclusive with the Cleveland Institute of Electronics. It is your assurance of the finest in technical education and training.

**Registered Trademark*

Accredited by the Accrediting Commission
of the National Home Study Council

The Accrediting Commission has been approved by the U.S. Office of Education as a "nationally recognized accrediting agency."

CLEVELAND INSTITUTE OF ELECTRONICS

Using Semiconductor Diodes

By FRED E. EBERLIN, M. Sc., Member, IEEE
North American Rockwell Co.

2401-3

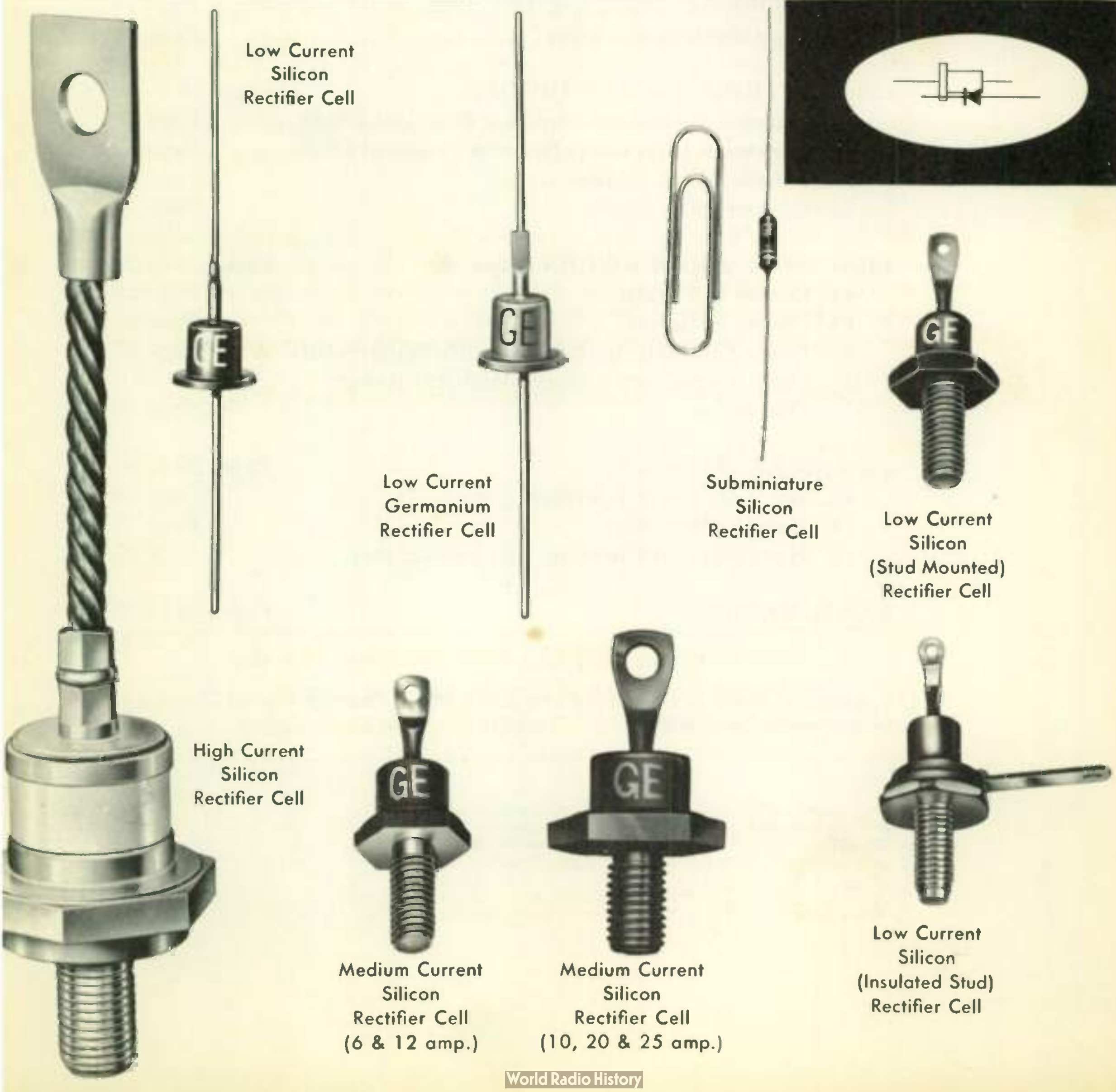

Low Current Silicon Rectifier Cell

Low Current Germanium Rectifier Cell

Subminiature Silicon Rectifier Cell

Low Current Silicon (Stud Mounted) Rectifier Cell

High Current Silicon Rectifier Cell

Medium Current Silicon Rectifier Cell (6 & 12 amp.)

Medium Current Silicon Rectifier Cell (10, 20 & 25 amp.)

Low Current Silicon (Insulated Stud) Rectifier Cell

In this lesson you will learn...

THE BIASING OF DIODES... Pages 2 to 9

A FEW USES FOR DIODES... Pages 9 to 12

IDENTIFICATION OF DIODES... Pages 13 to 15

CHARACTERISITICS OF DIODES... Pages 16 to 23

PRACTICAL DIODE OPERATION... Pages 23 to 29

POWER RECTIFIERS... Pages 29 to 34

Frontispiece: *Examples of semiconductor diodes.* Photo: Courtesy, General Electric Co., Semiconductor Products Dept.

SECOND EDITION/Fourth Revised Printing/December, 1967.

2401-3

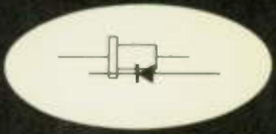

A chat with your instructor

A diode is a device that will pass current readily in one direction, but not in the other. A vacuum tube rectifier is an example. Current can pass through it from cathode to plate, but not from plate to cathode. A diode is a one-way street for current. A diode acts as a conductor in one direction, and as an insulator in the other. Diodes are also called rectifiers, particularly when they are used for changing alternating current to direct current, as in a power supply.

A semiconductor diode is one in which the rectifying action takes place in a solid material, in contrast to vacuum tube diodes where rectification is brought about by a vacuum. Semiconductor diodes get their name from the raw material used in their construction, which is neither a good conductor nor a good insulator. Being half way between conductor and insulator the material is called a semiconductor. Semiconductor diodes are also called solid-state diodes. Silicon, germanium and selenium are the most important semiconductor materials at the present time.

Semiconductor diodes were first used in radio as detectors in the simple "crystal" sets of the early 1920's. Soon replaced by the then more satisfactory vacuum tube detector, solid-state diodes were for many years considered obsolete. Parallel with the development of the transistor (a closely related device), the semiconductor diode was developed into a highly reliable and practical rectifier, capable of mass production at low cost. At the same time the rapid development of new fields of use for electronics vastly increased the number of uses for diodes. Today semiconductor diodes are used in vast numbers for a wide variety of purposes. Compared to vacuum tube diodes, they are much smaller, require less power, need no filament voltage supply, are more rugged, have a longer life, and have a lower voltage loss. Some pieces of electronic equipment, such as computers, use hundreds of these little diodes. Many examples of how diodes are used are given in this lesson. You will find many other uses in later lessons.

To provide semiconductor diodes to meet every need, over 12,000 different types are manufactured by well over 100 companies. The current carrying capacity of various types varies from a few milliamperes up to 1000 amperes or more. The maximum voltages that can be used with the different types varies from a few volts up to 10,000 volts and over.

Today the semiconductor diode is as important as its closely related, but more complex cousin, the transistor. In fact, you will frequently find diodes used in transistor circuits. For example, a flip-flop circuit (square wave oscillator) usually uses only two transistors, but may use a half dozen or more diodes.

As you study the lesson you will come across blanks in which you are to write in the missing word. As soon as you fill in each blank, check with our answer at the bottom of the page. By using these blanks as directed, you will learn the subject better and faster.

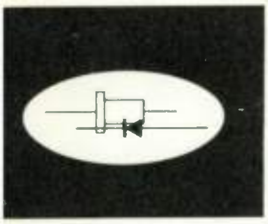

Using Semiconductor Diodes

THE BIASING OF DIODES

1 TWO TYPES OF SEMICONDUCTOR DIODES . . . There are two basic types of semiconductor diodes. One type, usually referred to as the "junction" diode, consists of two wafers of semiconductor materials joined together. Both wafers are of the same semiconductor material, such as silicon or germanium, but differ from each other in that they contain different kinds of impurities. The wafers are thinner than a calling card, with a diameter depending upon their current carrying capacity, perhaps one-eighth inch for a unit able to carry one ampere. The semiconductor elements are sealed up in metal, glass, or plastic to keep out moisture and protect them from damage. Junction diodes are usually made of silicon or germanium.

A small amount of impurities is deliberately introduced into the melted semiconductor material during the manufacturing process. This doping is done to improve the conductivity of the material and also to give it certain electrical qualities needed for making diodes and transistors. Depending upon the kind of impurity used, the doped semiconductor materials are classified as *N-type* materials and *P-type* materials.

One of the wafers in a junction diode is N-type material and the other is P-type. The two wafers are not joined in the sense of being butted together, but rather they are melted together to form a single crystalline structure.

The *metallic* rectifier is the other type. It consists of a semiconductor material butted against a metal plate. The semiconductor material used in this type is usually cuprous oxide or selenium. Of the two, selenium is now the most popular.

Junction diodes can be used for any purpose for which diodes are suitable. Metallic rectifiers are primarily used as power rectifiers for changing alternating to direct current, as in power supplies. Metallic rectifiers are many times the size of junction diodes of the same current and voltage handling capacity. Typical junction diodes are shown on the frontispiece to this lesson. You can visualize their size by comparing with the paper clip also shown. Typical metallic rectifiers are shown in Fig. 13. Generally, you can distinguish between two types of rectifiers by the series of separated plates of which the metallic rectifiers are always constructed.

WHAT HAVE YOU LEARNED?

As soon as you answer each question, check with the answer we give at the end of the exercise.

1. In electronic equipment where space is limited you would use a ____________ type diode as the rectifier in the power supply.

2. As a detector in a radio receiver you would use a ____________ type semiconductor diode.

3. A silicon diode is a (a) ________________ type diode, and is therefore (b) __________ in physical size. Another diode of the same type is

the (c) ____________ diode. A copper-oxide diode is a (d) ____________ type diode, and therefore (e) ____________ in physical size. Most diodes of this type made today are (f) ____________ diodes.

ANSWERS

1. junction
2. junction
3. (a) junction; (b) small; (c) germanium; (d) metallic; (e) large; (f) selenium

2 CURRENT FLOWS WHEN DIODE IS FORWARD BIASED

. . . Connect the *P*ositive terminal of the voltage source to the *P*-type material and the *N*egative terminal to the*N*-type material and the diode will act as a low resistance, conducting current freely, as shown in Fig. 1(a). The diode is then said to be *forward biased.*

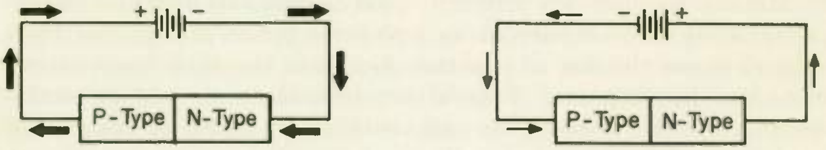

(a) Semiconductor Diode Forward Biased --- Current Flows Freely

(b) Semiconductor Reverse Biased --- Only Slight Current Flows

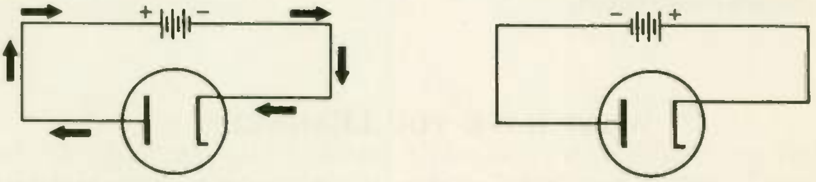

(c) Tube Diode Forward Biased --- Current Flows Freely

(d) Tube Diode Reverse Biased --- No Current Flows

Fig. 1 Forward and reverse biasing of semiconductor and tube diodes.

If the voltage source is connected to the diode just the reverse of above, so that the negative terminal connects to the P-type and the positive terminal to the N-type material, the diode acts as a high resistance and very little current will flow. The diode is then said to be *reverse biased.* The diode of Fig. 1(b) is (1) ____________ biased.

(1) reverse;

If the polarity across a diode is such that it conducts freely, it is (2) ________ biased. If the polarity is such that it conducts very little it is (3) ________ biased. When a diode is forward based, its resistance is (4) ________. When a diode is reverse biased, its resistance is (5) ________.

Figure 1(c) and (d) show a tube diode forward and reverse biased. To forward bias a tube diode, the positive side of the voltage source is connected to the (6) ________ of the tube, and the negative side to the (7) ________. The P-type material in a semiconductor therefore corresponds to the (8) ________ of a diode tube, and the N-type material to the (9) ________.

When a diode tube is forward biased, the direction of electron flow within the tube is from (10) ________ to ________. When a semiconductor diode is forward biased, the direction of electron flow within the diode is from (11) ________-type material to (12) ________-type material.

An important difference between a tube diode and a semiconductor diode is that when a tube diode is reverse biased no current flows, while when a semiconductor diode is reverse biased, a small current flows. The current that flows with reverse bias is variously called *reverse* current, *backward* current or *leakage* current. The current through the diode when it is forward biased is called the *forward* current. The current that flows through a diode from N-type to P-type material is the (13) ________ current.

3 ARROW POINTS IN OPPOSITE DIRECTION TO ELECTRON FLOW

. . . The schematic symbol for a semiconductor diode is shown in Fig. 2(a). The arrow points *opposite* the direction of electron flow, when the diode is forward conducting. The diode in Fig. 2 (b) conducts freely because the direction of electron flow through it is *opposite* the direction the arrow points on the diode.

The arrow was adopted to point in the conventional direction of current flow (which is opposite to the direction of electron flow). In this course we will consider current direction as being the direction of electron flow. Consequently, the forward current direction through a diode symbol is opposite the arrow direction.

(2) forward; (3) reverse; (4) low; (5) high; (6) anode (plate); (7) cathode; (8) anode (plate); (9) cathode; (10) cathode (to) anode; (11) N; (12) P; (13) forward;

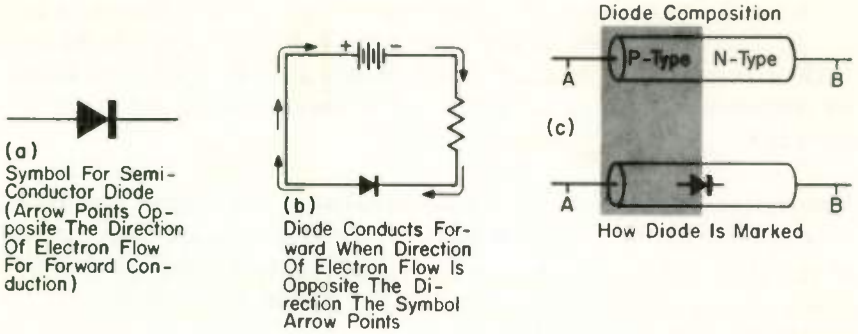

(a)
Symbol For Semiconductor Diode (Arrow Points Opposite The Direction Of Electron Flow For Forward Conduction)

(b)
Diode Conducts Forward When Direction Of Electron Flow Is Opposite The Direction The Symbol Arrow Points

Fig. 2 The diode symbol and its use.

In the symbol for a semiconductor diode, the connection to the arrow would be in the actual diode connected to the (14)______-type material, and the connection to the bar would be to the (15)______-type material in an actual diode.

To identify the forward conduction direction for the user, it is common practice to print the semiconductor diode symbol on the diode, as shown in the bottom half of Fig. 2(c). When this diode is conducting freely, the direction of electron flow is from point (16)______ to point (17)______.

In a vacuum tube diode, the element at which the current enters is called the (18)______________ and the element at which the current leaves the diode is called the anode (or plate). The same terminology is used with semiconductor diodes, except that the term "plate" is never used in place of "anode". The N-type material is the (19a)________ and the P-type material is the anode.

WHAT HAVE YOU LEARNED?

1. Below is a diagram of a simple pocket polarity checker. When the positive test lead is connected to the positive side of a voltage source and the negative lead to the negative side, the bulb lights. If the polarity is reversed, the lamp does not light. Draw the diode schematic symbol on the diode, pointing in the correct direction. Also indicate the cathode and the anode.

(14) P; (15) N; (16) B; (17) A; (18) cathode; (19a) cathode;

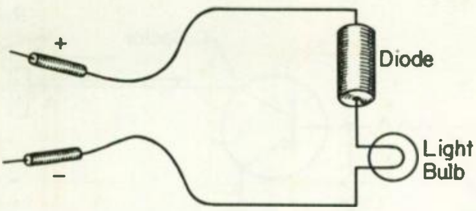

. Because junction diodes are small and now inexpensive, it is often ractical to use them as a simple way to modify circuit wiring, or to ake it possible to use simpler circuitry in new wiring. In the circuit elow, light L_2 is on when the single-pole, three-throw switch is in the pper position; light L_1 is on when the switch is in the lower position; nd neither light is on when the switch is in the center position. You ant to modify the circuit so that L_1 and L_2 are both on when the witch is in the down position, and light L_2 is on only when the switch in the upper position. Without making changes in the present wiring, dd a diode and any additional wiring to get the desired results. Be ure to draw in the diode with the arrow pointing correctly.

hat changes would have to be made in order to accomplish the me result without using a diode? Can the present switch be used? not, what type of switch would be needed?

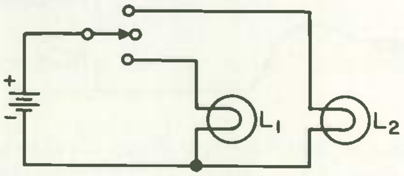

. In the circuit below a transistor is used as a switch to operate a elay. When there is no input signal, collector current flows so that he relay is energized. When a positive input d-c signal comes along, he collector current is cut off, and the relay is de-energized. While ollector current is flowing, point A is (a) *(positive) (negative)* with espect to point B. When the collector current cuts off, the relay coil urrent drops suddenly to zero. This induces a voltage of *opposite* olarity across the coil. Point A is (b) *(positive) (negative)* with respect point B during the moment when the induced coil voltage exists. his induced voltage is likely to be high enough to damage the sensiive transistor. Show how you would connect a diode into the circuit that the back induced voltage of the coil will be shorted out. Be re the diode symbol shows the correct current direction.

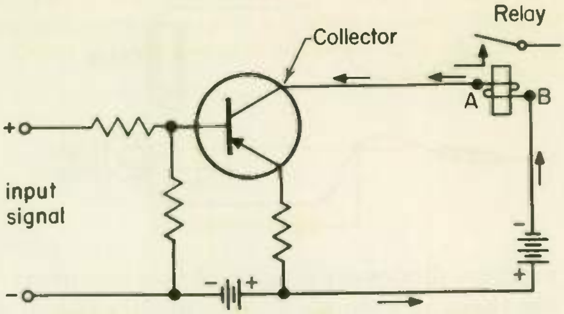

4. On the schematic symbol below, identify the cathode and the anode.

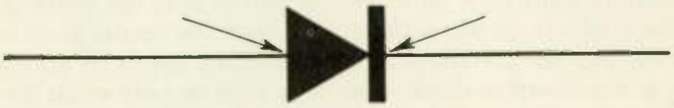

ANSWERS

1.

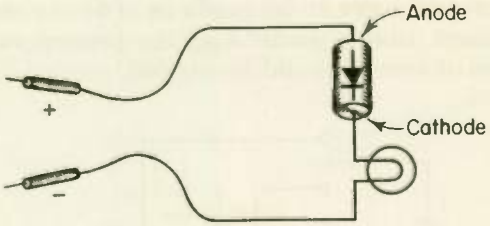

2. To the left below is the circuit using a diode. To the right is the simplest circuit if a diode is not used. In the latter case the present switch must be replaced with a double-pole, three-position switch.

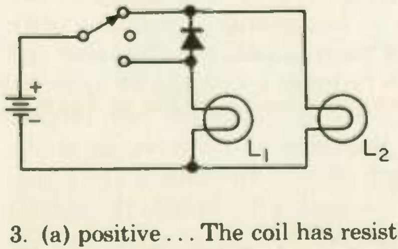

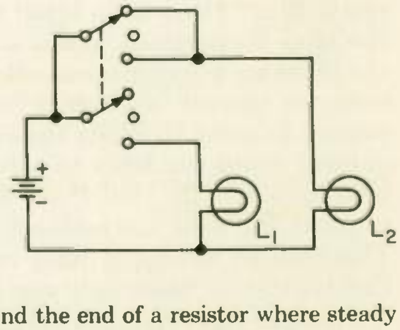

3. (a) positive . . . The coil has resistance, and the end of a resistor where steady direct current enters is always negative with respect to the other end.
(b) negative

During normal conduction, point A is positive to B, and consequently the diode is inactive. During the moment when the relay is de-energized, point B is positive with respect to A, so that the diode acts as a short between A and B, preventing a high voltage build-up.

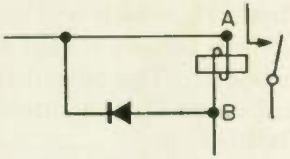

4.

A FEW USES FOR DIODES

So that you can get the "feel" for working with diodes, we present here two examples of modern applications. The first example shows how diodes are used, like highway signs, to direct or "steer" signals to the proper destination. Diode circuits for this purpose are called "steering" circuits.

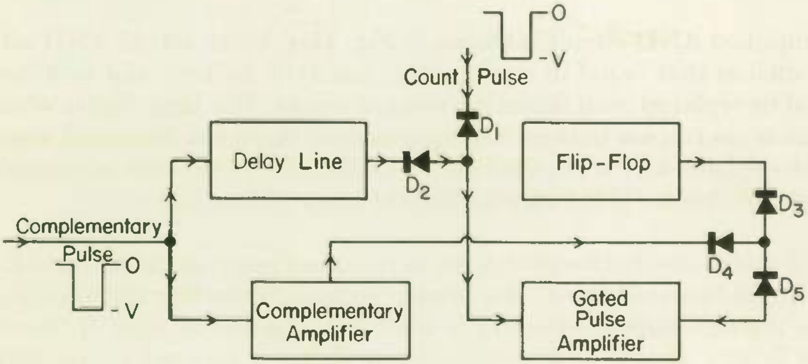

Fig. 3 **Block diagram of a section of a computer, showing the use of diodes as steering circuits.**

4 A STEERING CIRCUIT . . . Figure 3 is the block diagram of part of a pulse counting circuit. You need not understand the purpose of the various blocks. By means of the diodes, certain of the pulses are

prevented from entering certain blocks. The arrows indicate the direction of electron flow when a pulse is present. The count pulse and the delay line output pulse pass through D$_1$ and D$_2$ respectively and thus go to the gated pulse amplifier. The count pulse is kept from entering the delay line by diode D$_2$, which will not conduct from right to left. Similarly, the delay line output is kept from entering the source of the count pulse by diode D$_1$. The output from the complementary amplifier passes through diode D$_4$ and through diode (19b)____ to the block on the diagram labeled (20)________________________. The output from the complementary amplifier is prevented from entering the flip-flop block by diode (21)______.

The output signal from the flip-flop block is fed to the block labeled (22)________________________, and is kept from entering the (23)____________________________ block by diode (24)_____. The diodes in Fig. 3 are obviously steering diodes, directing the various pulses to the desired destination.

5 AN *AND* LOGIC CIRCUIT . . . For our second example, we will show how diodes are used to make AND logic circuits. AND circuits are widely used in computers, business tabulating equipment, telemetry and automatic control circuitry.

A simplified AND circuit is shown in Fig. 4(a). In an actual AND circuit such as that found in a computer, the 24-V battery and switches would be replaced with incoming voltage pulses. The lamp lights when switch S$_1$ *and* S$_2$ are both in the up position. Note the italicized word which explains why it is called an AND circuit. If only one or neither of the switches are in the up position, the lamp will not light.

In Fig. 4(a), since both switches are in the down position, both diode D$_1$ and D$_2$ are forward biased. The current supplied from the 120-V source flows through both diodes and is limited by the resistance R. Since there is only a very small voltage drop across a forward conducting diode, the diodes effectively short out the lamp. For purposes of analysis, the circuit may be redrawn as in Fig. 4(b) where the diodes are replaced by direct shorts. Since both diodes and the lamp are all connected in parallel, the current will take the path of least resistance and flow through both diodes and not through the lamp. The 24-V battery plays no part in the circuit since its positive terminal is disconnected from the circuit when both switches are in the down position. There-

(19b) D$_5$; **(20)** gated pulse amplifier; **(21)** D$_3$; **(22)** gated pulse amplifier; **(23)** complementary amplifier; **(24)** D$_4$;

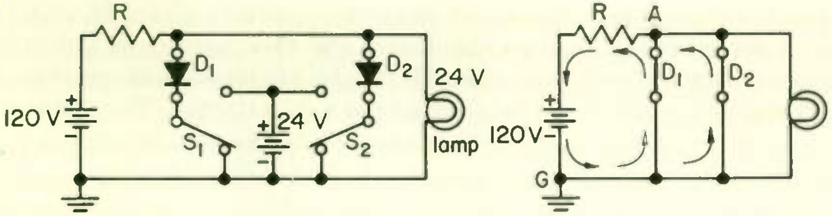

(a) AND circuit – S_1 down, S_2 down

(b) Equivalent AND circuit — S_1 down, S_2 down

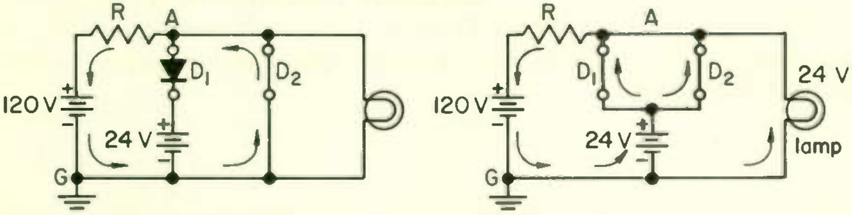

(c) Equivalent AND circuit – S_1 up, S_2 down

(d) Equivalent AND circuit – S_1 up, S_2 up

Fig. 4 **Operation of an AND logic circuit.**

fore, the 24-V battery has been left out of Fig. 4(b) which is the equivalent circuit when both switches are in the down position.

Now if we consider what happens when S_1 is in the up position and S_2 is in the down position, we can draw an equivalent circuit as shown in Fig. 4(c). Diode D_2 is still forward biased and shunts the lamp terminals so that essentially no voltage is applied across the lamp. All of the current provided by the 120-V battery flows through D_2 instead of both diodes as in the case where S_1 and S_2 were in the down position. When S_1 is in the down position and S_2 is in the up position, all current provided by the 120-V battery flows through D_1 instead of both diodes as in the case where S_1 and S_2 were in the down position. When only one of the switches is in the up position, the diode connected to that switch is reverse biased by the 24-V battery since points A and G are than at the same potential.

When both switches S_1 and S_2 are in the up position, diodes D_1 and D_2 are connected to the positive terminal of the 24-V battery as shown in the equivalent circuit of Fig. 4(d). The diodes are forward biased due to the voltage difference and polarity of the two batteries. For purposes of analysis the diodes, are shown as shorted connections in the equivalent circuit of Fig. 4(d).

Point A is now 24-V positive with respect to G so that the lamp has voltage applied to it and will light.

Note that the 24-V battery never delivers any current to the circuit. That is, no current flows out of its negative terminal. You can see from Fig. 4(d) that current flows into its negative terminal supplied by the 120-V battery. The 24-V battery thus looks like a resistor with 24 V across it. Hence, the battery establishes the voltage at point A when both switches are in the up position.

6

PRACTICAL USE OF AN *AND* CIRCUIT . . . As an example of a practical use of an AND circuit, suppose a manufacturer wants to find out how many of its model D machines have been returned for repair. The manufacturer makes up a punched card for each machine sold, listing by means of punched holes all information that may be needed later. For example, the hole marked 34 punched may mean that the sale was model D, and a hole at 16 may mean that the machine has been returned for repair. All the cards are mechanically fed through a tabulating machine. A series of conducting brushes pass over the cards and when one of them comes to a hole in a card it makes electrical contact with a conducting surface beneath. This is equivalent to a switch moving to the down position in Fig. 4. To find out how many model D's have come back for repair all cards must be monitored. Only those cards are counted which have a 34 hole punched AND a 16 hole punched. The operator therefore sets up the machine as an AND circuit similar to Fig. 4(a), in which hole 34 corresponds to S_1 in Fig. 4(a), and hole 16 corresponds to S_2. In place of the lamp bulb there is a counting circuit. On any card in which holes 34 and 16 are both punched, a pulse will be counted. If only one or neither of the holes are punched, there will be no pulse going to the counting circuit.

7 IDENTIFYING CONDUCTION DIRECTION . . . The most common method of indicating conduction direction is by printing the schematic symbol on the diode as already mentioned. Unfortunately, manufacturers have different ideas as to the proper way to indicate conduction direction. One common method is to print a plus (+) sign at the *cathode end* of the diode. This is likely to be confusing at first, because the cathode of a tube or diode is always negative with respect to the plate when conducting. So why mark it positive? The reason is that when a diode is used in a power supply to convert alternating current to direct current, you always connect the cathode of the diode to the positive side of the rectified output. You can see this in Fig. 5. The arrows show the direction that the diode allows current to flow through the load. Current flowing in this direction makes the top of the load positive and the bottom negative. Since the top of the load connects to the cathode of the diode, it follows that the cathode of the diode is connected to the positive side of the load.

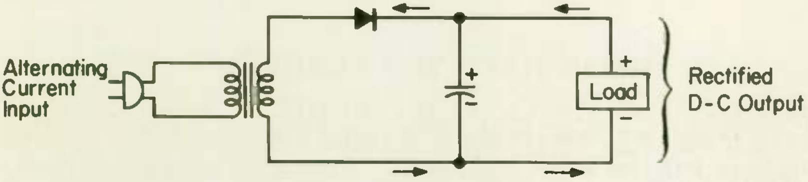

Fig. 5 **When a diode is used in a power supply, its cathode is connected to the positive side of the load.**

Some manufacturers use a dot or a band at the cathode end rather than a plus sign. Other manufacturers print the letter *K* at the cathode end. Glass encased diodes sometimes have a color spot in the glass at the cathode end. When a diode is enlarged at one end (called a "top-hat" diode), as in Fig. 6(b), the enlarged end is usually the cathode when not otherwise marked. Still another method is to use color bands, like on a resistor, at the cathode end, as shown in Fig. 6(a). When color bands are used, a letter to indicate the manufacturer is often printed at the other end. The diode of Fig. 6(a) was manufactured by Hughes Aircraft.

The color bands also indicate the identification number of the diode, as will be explained shortly.

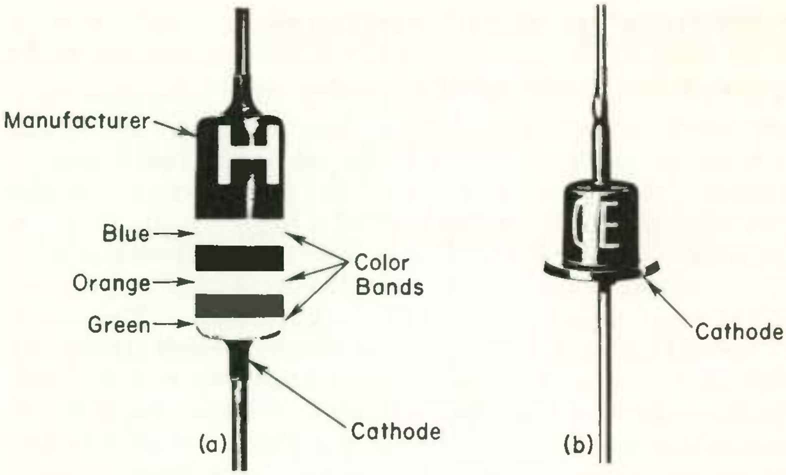

Fig. 6 When color bands are used, they are at the cathode end, as in (a). In the top hat diode, as in (b), the cathode is at the enlarged end. (Courtesy: (a) Hughes Aircraft Co.; (b) General Electric Co.)

WHAT HAVE YOU LEARNED?

1. Write "right" or "left" in the following blanks to indicate whether the right or left end is the cathode for the corresponding diodes pictured below.

A__________ B__________ C__________
D__________ E__________

(a)

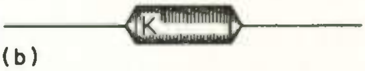

(b)

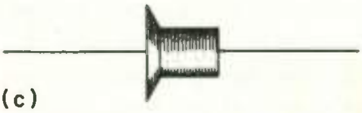

(c)

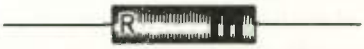

(d)

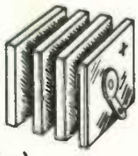

(e)

2. Assume that diode C above is used as a power supply rectifier. Should the right or left hand lead of this diode be connected to the positive side of the rectified output? ________.

ANSWERS

1. A – right; B – left; C – left; D – right; and E – right.
2. Left . . . The cathode always connects to the positive side of the rectified output.

8 IDENTIFICATION OF DIODES . . . Semiconductor diodes are given type numbers to distinguish them from diodes with different characteristics. Most semiconductor diode type numbers begin with *1N*. A typical diode type number would be *1N1701*. The *1N* indicates that the unit is a diode, and so distinguishes it from transistor units, which are prefixed *2N*. The *1701* is merely a serial number assigned to identify this particular type.

Diodes are sometimes color-code identified, such as in Fig. 6(a). Remember that green is 5, orange is 3, and blue is 6 in the color code. Now read from the cathode end. The diode of Fig. 6(a) reads *536*, which shows it is a type *1N536* diode. The *1N* in front of each diode number is understood, and not indicated by the color code. *Always read the color code from the cathode end.*

WHAT HAVE YOU LEARNED?

1. Is the cathode end of the diode below on the right or left? (a)________. To read the color code of a diode we read from the (b)________ end. The diode shown is type number (c)________.

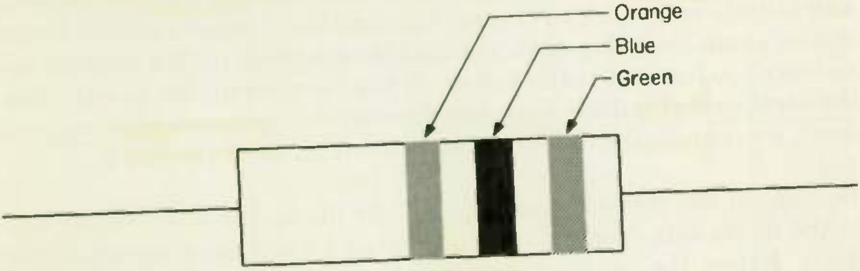

ANSWERS

1. (a) right; (b) cathode; (c) 1N563.

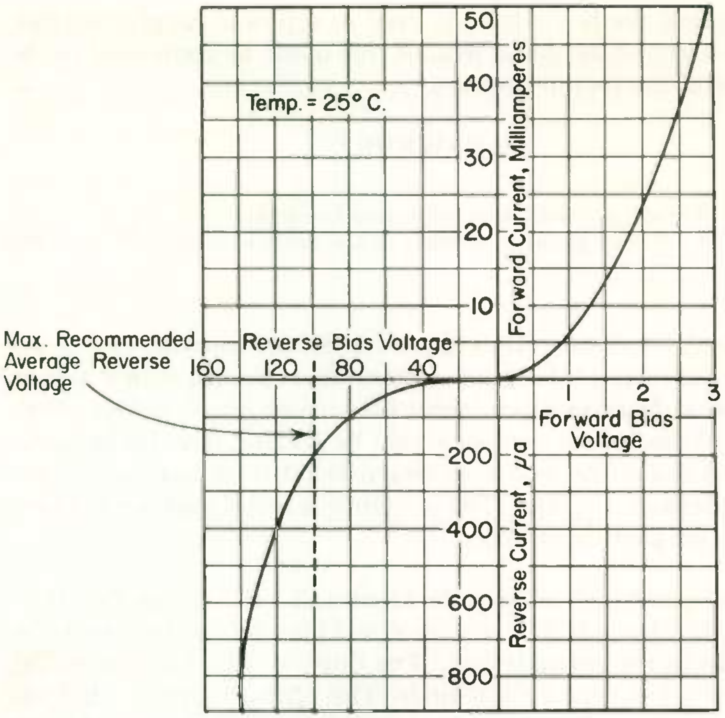

Fig. 7 Volt-ampere characteristic curve for the IN63 diode.

CHARACTERISTICS OF DIODES

9 FORWARD CHARACTERISTICS OF A PRACTICAL DIODE . . . The ideal diode would have zero resistance to forward current and infinite resistance to reverse current flow. Unfortunately, actual diodes available today have noticeable resistance (called forward resistance) to forward current flow. While vacuum diodes nearly meet the ideal case of infinite back resistance (resistance to reverse current flow), semiconductor diodes fall noticeably short of the mark.

Because of the forward resistance of the diode, there is a power loss in the diode with forward current flow and a voltage drop across the diode. Hence, the use of diodes always results in a voltage and power loss. The voltage loss can be determined by a volt-ampere characteristic curve for the type diode being used. Such a curve for the 1N63, which is a germanium diode, is shown in Fig. 7. Reading from the curve we find that the voltage drop for a forward current of 10 ma is (35) ____________ volts, for a current of 25 ma it is (36a) ____________ volts, and for a current of 50 ma, which is the maximum average current that this diode should carry, the voltage is (36b) ____________ volts.

The forward resistance for a current of 10 ma is 1.3/0.010 = (37) ____________ ohms. The forward resistance for a current of 25 ma is (38) ____________ ohms, and for a current of 50 ma, (39) ____________ ohms. These figures show that the forward resistance of a semiconductor diode varies with the current, being less for higher current values. When the current through a copper wire changes, its resistance (40) *(does) (does not)* change. When the current through a diode is lowered, its resistance is (41) *(raised) (lowered)*.

WHAT HAVE YOU LEARNED?

1. The maximum average forward current the 1N63 diode of Fig. 7 can carry without damage is 50 ma. If this diode is connected across a battery as in Fig. 1(a), what is the maximum voltage that the battery can have if the diode is not to be damaged? ____________ volts.

2. The figure below shows a generator hooked up for charging a battery. To charge a battery, current must pass through it in the opposite direction to the current direction during discharge.

Draw an arrow on the diagram showing the direction of electron flow when the battery is charging. Also mark the proper polarities for the generator terminals, so that it is possible for the generator to furnish current in the correct direction for charging. For the battery to charge, the generator voltage must be more than (a) ____________ volts. If the generator voltage is less than this, as is usually the case when the generator is operated by an idling automobile engine, the current direction will be (b) ____________ to when the voltage is above 12 volts, thus (c) ____________ the battery.

Connect a diode in the circuit so as to prevent battery discharge through reverse current flow while the engine is idling.

If the battery has an internal resistance of 0.05 ohms and the voltage across the diode for a current of 20 amperes is 2.1 volts, what must be the generator voltage for the battery to charge at a 20 ampere rate? (d) ____________.

(35) 1.3; (36a) 2.1; (36b) 2.9; (37) 130; (38) 84; (39) 58; (40) does not;
(41) raised;

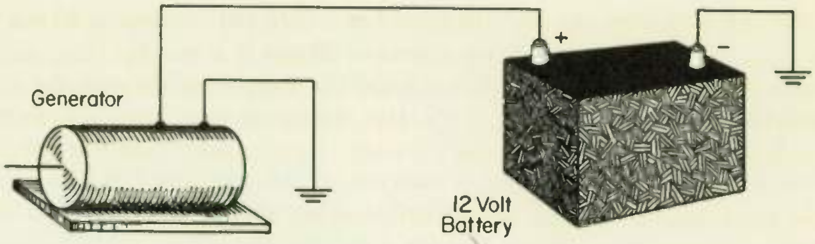

3. Assume the diodes used in Fig. 3 are 1N63's. If the output from the complementary amplifier is 10 volts, and it delivers 10 ma to the gated pulse amplifier, what is the voltage at the input to the gated pulse amplifier? __________.

4. When a 1N63 diode carries a current of 50 ma, the power loss in the diode is __________ watts.

ANSWERS

1. 2.9 (volts).

2. (a) 12 (volts); (b) opposite; (c) discharging; (d) 15.1 volts . . . The voltage drop across the internal resistance of the battery is E = IR = 0.05 × 20 = 1 volt. The voltage required for charging at 20 amperes is 12 + 1 + 2.1 = 15.1 volts.

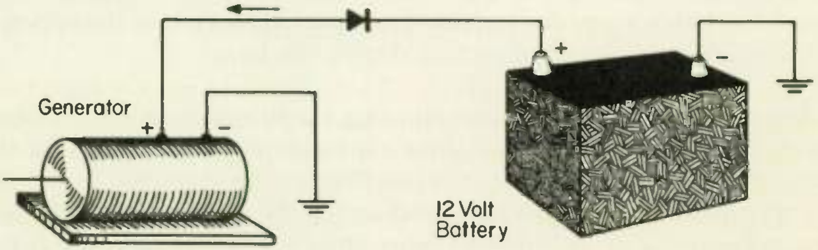

3. 7.4 volts . . . Fig. 7 shows the voltage drop across the 1N63 at 10 ma to be 1.3 volts. Since the current passes through two 1N63's in series, the total voltage lost is 2 × 1.3 = 2.6 volts. The voltage to the gated pulse amplifier is 10 − 2.6 = 7.4 volts.

4. 0.15 (watts) . . . From Fig. 7 the voltage at 50 ma is 2.9 volts. P = EI = 2.9 × 0.050 = 0.145 watts.

10 BACKWARD CHARACTERISTICS OF A PRACTICAL DIODE

. . . Figure 7 shows that for 40 volts reverse bias, the reverse current

20 μamp, for a reverse voltage of 80 volts the reverse current is) ______ μamp, and for a reverse voltage of 100 volts (the maxi- um d-c reverse voltage that should be used with this diode) the verse current is (43) ______ μamp. These currents are sufficiently nall that they can be ignored for many applications, but not for all.

he backward resistance at 40 volts reverse bias is

$$\frac{40}{20 \times 10^{-6}} = 2 \text{ megohms}$$

he backward resistance at 80 volts is (44) ______ megohm, and the ckward resistance at 100 volts is (45) ______ megohm. Thes figures ow that the back resistance (46) ______ as the reverse bias voltage increased. The back resistance is very high compared to the for- ard resistance. We previously found the forward resistance at 50 ma be 58 ohms. The backward resistance at 100 volts is 500,000 ohms. he ratio of back to forward resistance is 500,000/58 or 8,620 to 1. hat is, the back resistance of the 1N63 at maximum reverse voltage (47) ______ *times* the forward resistance at maxi- um forward current.

WHAT HAVE YOU LEARNED?

. Some diode types are specifically designed to have a high back esistance. The purpose of this problem is to show you why a diode f this type must sometimes be used. In the figure below when switch $_2$ is closed, light (a) ______ is on, while light (b) ______ is not n. Lights L_1 and L_2 are both on when switch (c) ______ is closed. 'he plate current of tube V_1 is cut off by -24 volts with respect to round applied to the tube grid when switch (d) ______ is closed.

Vhen switch S_1 is closed, diode (e) ______ keeps the -24 volts om being applied to the grid of V_1, assuming the back resistance of his diode is very high.

f the back resistance of diode D_2 is low, closing switch S_1 will have he unwanted effect of applying a voltage to the grid of V_1. Assume he back resistance of D_2 to be 250,000 ohms. Then you can calculate he grid voltage on V_1 to be (f) ______ volts. This is probably ufficient to cut off the plate current, which you don't want to occur xcept when S_2 is closed. If diode D_2 is replaced with one with a back

2) 100; (43) 200; (44) 0.8; (45) 0.5; (46) decreases; (47) 8620;

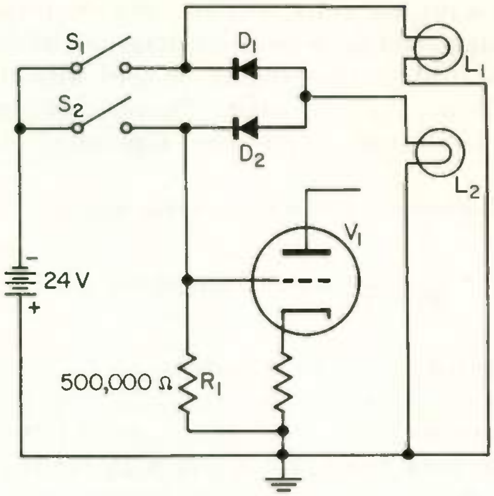

resistance of 5 megohms, the voltage on the grid of V_1 is (g) ________ volts. This would not affect the operation of V_1.

The resistance of lamp L_1 is 100 ohms. If diode D_1 has a back resistance of 250,000 ohms and S_2 is closed, the voltage across L_1 is (h) ________ volts. This shows that a diode with low back resistance is (i) *(satisfactory) (not satisfactory)* for D_1.

If the back resistance is in series with a high-resistance load, a (j) ________ back resistance type diode is needed. If the back resistance is in series with a low-resistance load, a (k) ________ resistance type diode is satisfactory.

ANSWERS

1. (a) L_2; (b) L_1; (c) S_1; (d) S_2; (e) D_2; (f) -16 (volts) . . . The back resistance is in series with R_1, giving the equivalent circuit shown below. The circuit resistance is 250,000 + 500,000 = 750,000 ohms. The current is 24/750,000 = 32 μamp. The grid voltage, which is the voltage across R_1 is 0.000032 × 500,000 = 16 volts.

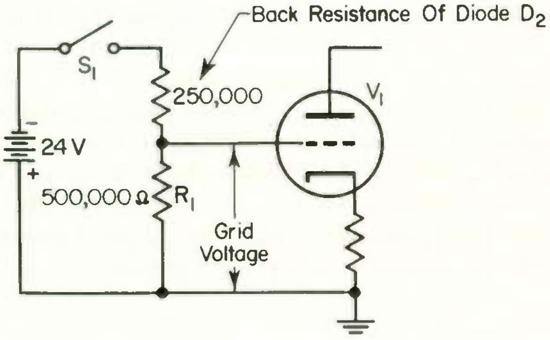

(g) −2.18 (volts); (h) 0.0096 (volts); (i) satisfactory; (j) high; (k) low.

11 FORWARD BIAS LIMITS . . . Because of its forward resistance, heat is produced with forward current flow through a diode. The more the forward current, the greater the heating rate, and consequently the hotter the diode becomes. When the diode becomes sufficiently hot its crystalline structure is permanently changed, impairing or destroying its usefulness as a rectifier. Consequently, diode manufacturers' specification sheets always show a maximum d-c (average) forward current recommended for use with each diode type. For the 1N63 this is 50 ma. This means that this diode can carry continuously a 50 ma current as measured with a d-c ammeter. For not more than a few seconds, most semiconductor diodes can safely handle a much higher current than the average maximum value. For example, the 1N63 can carry a surge or peak current of 500 ma for a maximum of one second. Within this short a time, a large current does not develop enough heat to injure the diode. As a rule of thumb, a semiconductor diode can carry 10 times its rated maximum d-c value for one second.

12 REVERSE BIAS LIMITS . . . In Fig. 7 we see that as the reverse bias voltage increases beyond the maximum recommended average value, the reverse current increases rapidly and the back resistance decreases rapidly. For example at 120 volts the reverse current is (48) __________ μamp. An increase of only 20 volts to 140 volts, doubles the reverse current to (49) __________ μamp. The back resistance at 120 volts is (50) _______________ ohms, and at 140 volts it is (51) _______________ ohms. With a further increase in back voltage, the resistance drops and the current increases even more rapidly. As the back voltage continues to increase, a point is soon reached where the back resistance drops to near zero, and the back current becomes very high.

The greatly increased back current after the reverse bias voltage passes the maximum recommended operating value is called the *avalanche* current. The rapid drop in back resistance is caused by the breakdown of what is known as the "barrier potential". The barrier potential is what normally keeps the reverse current to a very low amount. Consequently, when the barrier potential breaks down the back resistance drops and avalanche current flows. The entire process is referred to as *avalanche breakdown*.

(48) 400; (49) 800; (50) 300,000; (51) 175,000;

The avalanche breakdown does not in itself injure the diode. If the diode is not damaged by overheating, it will perform quite normally again when the excess reverse bias is removed. You will see later how the avalanche breakdown is used to advantage in the important zener diode.

In ordinary semiconductor diodes the recommended maximum reverse operating voltages should not be exceeded. To do so may injure the diode from overheating caused by the avalanche current. Furthermore, the increased back current reduces its efficiency as a diode or rectifying device, since one criterion of a good diode is that the back current be very low.

WHAT HAVE YOU LEARNED?

1. In the figure below K_1, K_2, and K_3 are relays. When switch S_1 only is closed, relays (a)_____ and _____ are energized. When S_2 only is closed, relays (b)_____ and _____ are energized. When S_3 only is closed, relays (c)_____ and _____ are energized.

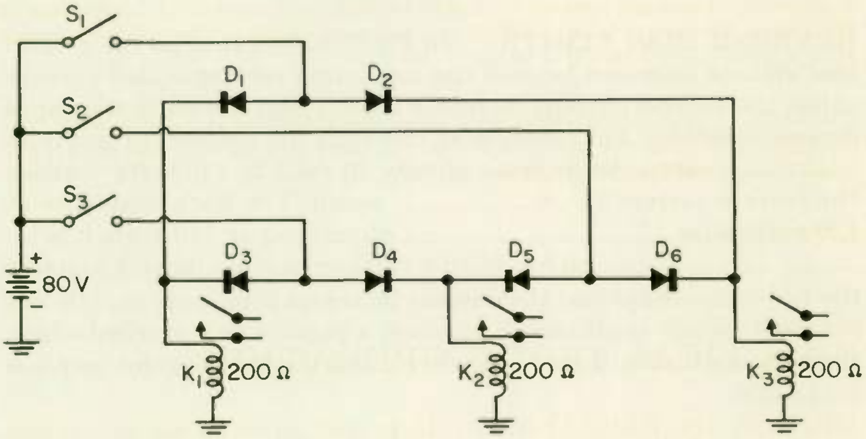

2. In the figure above it *(is) (is not)* important that the diodes have a very high back resistance.

3. Below are the reverse voltage and forward current characteristics of several silicon diodes. Pick out the type you would use for the circuit of Problem 1. Remember that the higher voltage and current rating the more expensive the diodes. The proper diode is __________.

Diode type	Maximum d-c forward current	Maximum d-c inverse operating voltage
1N537	750 ma	100 V
1N600	400 ma	100 V
1N1217	500 ma	50 V
1N1218	500 ma	100 V
1N1219	500 ma	150 V
1N1228	1.6 amp	100 V

4. The 1N537 diode can probably pass a one-second current surge of ________ amperes without damage.

ANSWERS

1. (a) K_1 (and) K_3
   (b) K_2 (and) K_3
   (c) K_1 (and) K_2

2. is not . . . The back resistance should be high compared to the resistance of the relays. The latter is only 200 ohms. Any good diode will have a back resistance a great many times this value.

3. 1N600 . . . The current through a relay and therefore any diode when conducting is 80/200 = 400 ma. The 1N600 will carry this current, and has a maximum d-c inverse operating voltage higher than 80 volts.

4. 7.5 (amperes)

PRACTICAL DIODE OPERATION

13 DIODES IN PARALLEL . . . If proper precautions are taken, diodes can be connected in parallel to increase the current carrying capacity. In Fig. 8(a) the load current is the (52) ________ of diode D_1 current and diode D_2 current. If the load requires 800 ma, and if both diodes conduct equal amounts of current, then the maximum d-c forward current rating of each diode must be (53) ________ ma or more. If the load requirement were 1600 ma, it could be met by using (54) ________ 400 ma diodes in parallel, assuming that all the diodes drew equal currents.

(52) sum; (53) 400; (54) four;

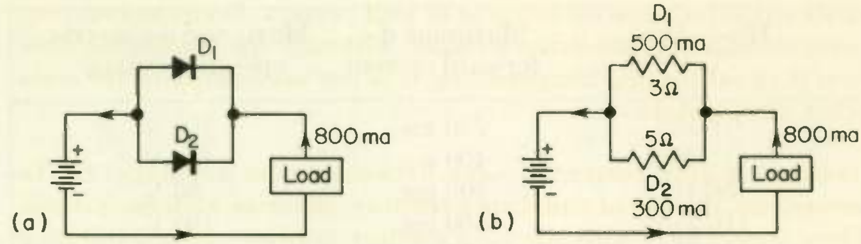

Fig. 8 (a) Diodes in parallel. (b) The equivalent circuit of (a).

Resistors in parallel draw equal currents if their resistances are (55) ________. Diodes connected in parallel draw equal currents if their forward (56) ____________ are equal. The forward resistances of diodes of different type numbers will, of course, vary greatly. Even within the same type number, characteristics (including the forward resistance) tend to vary considerably from diode to diode, because of the impossibility of perfect control during the manufacturing process.

If two diodes with unequal forward resistances are connected in parallel, the diode with the least resistance will draw (57) ________ current than the other diode. If diode D_1 in Fig. 8(a) has a forward resistance of 3 ohms and D_2 5 ohms, the equivalent circuit will be as in Fig. 8(b). The 800 ma to the load will be split with 500 ma going through D_1, and 300 ma through D_2. If both diodes are rated at 400 ma maximum average forward current, then diode (58) ______ will be overloaded and damaged.

Diodes used in parallel should all be of the same type to help equalize the current division between them. In addition the diodes should have a current rating of at least 25% higher than would be needed if it were known that the current distribution was even. Two diodes connected in parallel to supply 400 ma to a load should each have a current rating of (59) __________ ma or more. This extra margin will help take care of unequal current distribution between diodes of the same type number.

The current taken by each diode in parallel should be measured with an ammeter, changing diodes until a matched set is obtained in which all draw equal shares of the load. Even though this is done, the 25% extra margin mentioned above should still be allowed. The forward resistance changes with the current, but the rate of change is not necessarily the same in two diodes, even though of the same type. Consequently, even though the current is equalized between the diodes for one value of load current, the current division is not neces-

(55) equal; (56) resistances; (57) more; (58) D_1; (59) 250;

sarily equal for some other value of load current. Furthermore, temperature affects diode characteristics. Although the current distribution is equal for one temperature, it is not necessarily so for some other temperature.

Reasonably good current division between diodes in parallel can be assured by the use of equalizing resistors in series with each diode. These should be of such size as to produce at least a 1.5 or 2 volt drop for junction diodes and a 2 or 3 volt drop for metallic rectifiers. For example, if a 5 ohm resistor is connected in series with each branch in Fig. 8(b), the total branch resistances will be 8 ohms for the top branch and (60) ______ ohms for the bottom branch. The current through D_1 will now be 444 ma and the current through D_2, 356 ma, a much more satisfactory distribution than without the equalizing resistors. The disadvantage of using equalizer resistors with diodes in parallel is the additional voltage loss of the resistors.

14 DIODES IN SERIES

. . . If proper precautions are taken, diodes can be connected in series for use with a higher back voltage than the individual units can handle. Since the sum of the voltage drops around a circuit must equal the impressed voltage, the sum of voltages E_1, E_2, and E_3 in Fig. 9(a) is equal to (61) ______ volts. If the three diode voltages are equal, the voltage across each diode will be (62) ______ volts. Equal division of the applied voltage across the diodes will occur when the back resistance of the diodes are (63) ______.

As in the case of the forward resistance, the back resistance will vary considerably between diodes, even between those of the same type. When the back resistances of the diodes of Fig. 9 are unequal, the voltage will be greatest across the diode with the (64) ______ resistance.

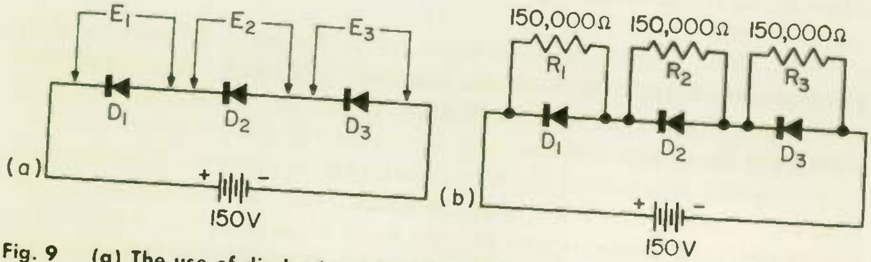

Fig. 9 (a) The use of diodes in series to increase back voltage rating. (b) The use of equalizing resistors to equally distribute the voltage.

(60) 10; (61) 150; (62) 50; (63) equal; (64) greatest;

Diodes operated in series to provide a higher back voltage should all be of the same type number to minimize variations in back resistance. The voltage across each diode should be checked with a vacuum tube voltmeter (or a 20,000 ohms-per-volt meter) to see that the individual back voltages are reasonably equal. The back voltage rating of the diodes should be at least 25% greater than would be necessary if even voltage distribution could be assured. The maximum d-c inverse operating voltage rating of the diodes in Fig. 9(a) should be at least (65)_____ volts.

The best way to assure satisfactory operation of diodes in series is by the use of equalizing resistors as in Fig. 9(b). Values between 100,000 and 200,000 ohms are usually suitable. The lower the value of the equalizing resistors, the better the voltage equalization. The equalizing resistors considerably reduce the back resistance of the circuit, but a lowered back resistance is not always objectionable.

Rather than operating diodes in series or parallel, it is always preferable to use a factory unit with the proper back voltage and forward current rating so that series or parallel operation is not needed. However, the good electronics man must know how to improvise, because the ideal component is not always readily available when needed.

WHAT HAVE YOU LEARNED?

1. In Fig. 8(b) show that if 5-ohm equalizing resistors are used with each diode, the D_1 current is 444 ma and the D_2 current 356 ma.

2. In Fig. 9(a) assume the back resistance of D_1 as 1 megohm, the back resistance of D_2 as 2 megohms, and that of D_3 as 3 megohms. Then E_1 = _____ volts, E_2 = _____ volts, and E_3 = _____ volts.

3. With back resistances the same as in Problem 2, assume that 150,000 ohm equalizing resistors are used as in Fig. 9(b). Now compute the voltages across the diodes, E_1 = _____ volts, E_2 = _____ volts, and E_3 = _____ volts.

ANSWERS

1. The resistance in the D_1 branch (we will call it R_1) is 8Ω. The D_2 branch (R_2) is 10Ω.

(65) 62.5;

$$R_{total} = \frac{R_1R_2}{R_1 + R_2} = \frac{8 \times 10}{8 + 10} = 4.44\Omega$$

The voltage drop across the diodes:
$E = IR = 0.800 \times 4.44 = 3.55$ V
D_1 current $= 3.55/8 = 444$ ma
D_2 current $= 3.55/10 = 355$ ma

2. $E_1 = 25$ V; $E_2 = 50$ V; and $E_3 = 75$ V . . .

$$R_{total} = 1{,}000{,}000 + 2{,}000{,}000 + 3{,}000{,}000 = 6{,}000{,}000\Omega$$

$$I = \frac{150}{6{,}000{,}000} = 0.000{,}025 \text{ amp}$$

$E_1 = 1{,}000{,}000 \times 0.000{,}025 = 25$ V
$E_2 = 2{,}000{,}000 \times 0.000{,}025 = 50$ V
$E_3 = 3{,}000{,}000 \times 0.000{,}025 = 75$ V

3. $E_1 = 47.3$ V; $E_2 = 50.6$ V; and $E_3 = 51.9$ V . . .

Combined resistance, R_1 in parallel with D_1.

$$R_{11} = \frac{R_1 \times D_1}{R_1 + D_1} = \frac{150{,}000 \times 1{,}000{,}000}{150{,}000 + 1{,}000{,}000} = 130{,}400\Omega$$

Similarly,

$$R_{22} = \frac{R_2 \times D_2}{R_2 + D_2} = \frac{150{,}000 \times 2{,}000{,}000}{150{,}000 + 2{,}000{,}000} = 139{,}500\Omega$$

$$R_{33} = \frac{R_3 \times D_3}{R_3 + D_3} = \frac{150{,}000 \times 3{,}000{,}000}{150{,}000 + 3{,}000{,}000} = 142{,}900\Omega$$

$$R_{total} = 130{,}400 + 139{,}500 + 142{,}900 = 412{,}800\Omega$$

$$I = \frac{150}{412{,}800} = 0.000363 \text{ amp}$$

$E_1 = 0.000363 \times 130{,}400 = 47.3$ V
$E_2 = 0.000363 \times 139{,}500 = 50.6$ V
$E_3 = 0.000363 \times 142{,}900 = 51.9$ V

15 DIODE CHARACTERISTICS VARY WITH TEMPERATURE

. . . Temperature affects the characteristics of all semiconductor diodes. As the operating temperature goes up, the forward resistance decreases. In this respect a high operating temperature is an advantage. However, the back resistance also decreases as the temperature goes up, which is a disadvantage.

The most important temperature consideration is the maximum safe operating temperature. This is approximately 100° Centigrade for germanium and selenium, 200° C for silicon diodes. At higher temperatures the crystalline structure of the diode is changed, causing permanent damage. The operating temperature is *ambient temperature* (the temperature of the air in the area where the diode is being used) plus the build up in temperature caused by the current flow through the diode. Obviously, the higher the ambient temperature, the less forward current the diode can carry and still keep the diode temperature below the maximum safe value.

All general diode specifications are given by manufacturers for an ambient temperature of 25° C, which is average room temperature. For operation at higher ambient temperatures, the manufacturers' forward current maximum values must be derated. This derating is frequently necessary, because the air temperature inside a confined cabinet full of heat-producing electronic equipment is often much higher than the room temperature outside.

When the ambient temperature is above 85° C, germanium or selenium diodes are not suitable, and silicon diodes are used. Because they can operate at higher temperatures, silicon diodes can in general carry higher currents than germanium.

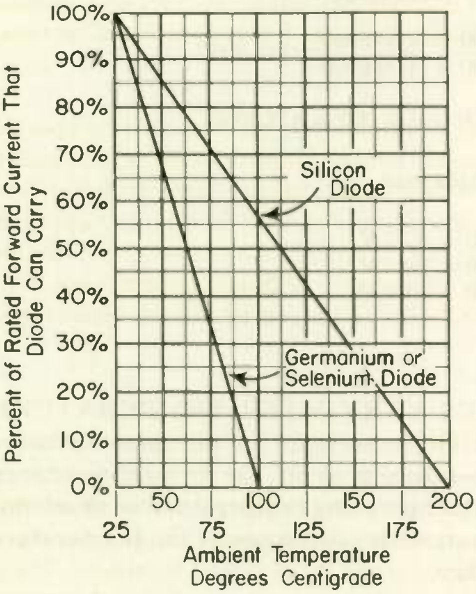

Fig. 10 For temperatures above 25° C diode current capacity must be derated in accordance with this graph.

You can tell from Fig. 10 how much to derate diodes for operation at ambient temperatures above 25° C. For example, this figure shows that at 100° C ambient temperature, a silicon diode can safely carry (66) ——— percent of its maximum rated forward current. A 500 ma silicon diode operating at 100° C can carry a maximum current of (67) ——— ma.

16 **DIODE CAPACITANCE LIMITS HIGH FREQUENCY OPERATION** . . . An ordinary capacitor consists of two charged plates held close together, but insulated from each other. A diode is similar. It consists of two plates (the N-wafer and the P-wafer) close together with a high resistance between in the reverse current direction. Consequently, the diode also acts as a capacitor. Since the N- and P-wafers are very small, the capacity is very small, typically 5 to 10 μμfd.

At low frequencies the capacitance effect of a diode is negligible. The higher the frequency the (68) ——— the current passes through a capacitor. Consequently, when diodes are used in circuits operating at above a few hundred kilocycles, the reverse current increases because the diode capacity has a low reactance at such a high frequency. If the frequency increases high enough, the diode capacity acts almost as a short circuit, so that the diode conducts freely in either direction, making it useless as a rectifier.

The useful high-frequency limit of diodes can be increased by special design that reduces the capacity value. High-frequency computer diodes have a capacity of only 1 or 2 μμfd, making them useful at frequencies as high as several megacycles. For very low-power applications, such as the mixer diode in the r-f circuit of a uhf receiver, diodes can be designed to function up to several thousand megacycles. The manufacturer's data sheets usually list the capacity of each diode type.

POWER RECTIFIERS

Diodes primarily intended to convert alternating current from the power mains into direct current, such as in a power supply for electronic equipment, are generally referred to as power rectifiers. They are available in sizes capable of handling a maximum forward current of from 75 ma or less up to hundreds of amperes. The inverse voltage rating of power rectifier semiconductor diodes varies from a few volts

(66) 57; (67) 285; (68) easier;

up to 100,000 volts or more. Both junction and metallic semiconductor power rectifiers are widely used.

17 JUNCTION POWER RECTIFIERS . . . Some typical junction type power rectifiers are shown on the frontispiece to this lesson. Because of their small size they cannot rapidly radiate heat to the surrounding air. Junction diodes carrying more than one ampere require a heat sink to carry away rapidly the generated heat. A heat sink is a good heat-conducting material in close contact with the diode. Copper and aluminum make excellent heat sinks. Occasionally, water or some other liquid is used as a heat sink.

The aluminum alloy heat sink of Fig. 11 is suitable for a diode carrying 50 amperes or more. This heat sink is about 4 inches square. The fins provide a large surface area in contact with the air for carrying away the heat. In mounting a diode or other semiconductor product to its heat sink, follow these steps:

(1) Make certain that the surface on which the diode is to be mounted is smooth and clean.
(2) Apply a lubricating material between the two surfaces to be joined. The lubricant used should have a high ability to pass heat. Silicon grease or colloidal graphite are recommended by diode manufacturers. The purpose of the lubricant is to improve the transfer of heat from diode to sink.
(3) The nut on the diode stud should always be tightened with a torque wrench to within the tolerance specified by the manufacturer. If the nut is too tight, the excessive pressure can damage the semiconductor material or change its

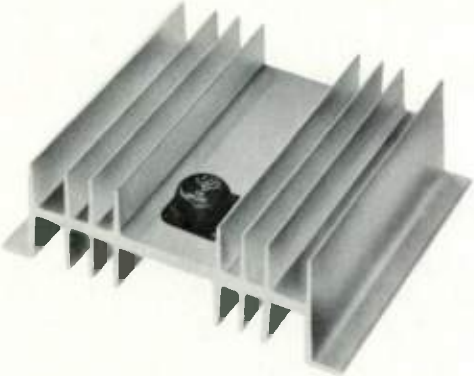

Fig. 11 A typical heat sink with transistor mounted. (Courtesy: The Birtcher Corp.)

Fig. 12 A heat sink designed to slip over a diode or transistor. (Courtesy: The Birtcher Corp.)

electrical characteristics. If the nut is not sufficiently tight, there will not be good heat transfer from the diode to the heat sink. The diode will then be damaged through overheating.

Another heat sink is shown in Fig. 12. This one slips over the diode making contact around the diode casing to carry away the heat.

Except for large current handling units an especially designed heat sink is not needed. For lower current values the aluminum chassis is quite suitable as a heat sink. However, remember to follow the mounting steps listed above. By using mica and teflon washers the diode can be insulated from its heat sink, if that is necessary. Since the diode stud is usually one electrical terminal of the diode (generally the cathode), the stud terminal will be electrically connected to the heat sink if this is not done.

18 METALLIC RECTIFIERS . . . Only selenium power rectifiers will be described here, since other metallic power rectifiers are now of little importance to electronics men. Two typical ones are shown in Fig. 13. Each plate represents an individual diode. Thus a selenium rectifier unit of many plates actually consists of many diodes. Many diodes may be needed because the maximum back voltage that can be applied to a selenium diode is usually 50 volts or less, in contrast

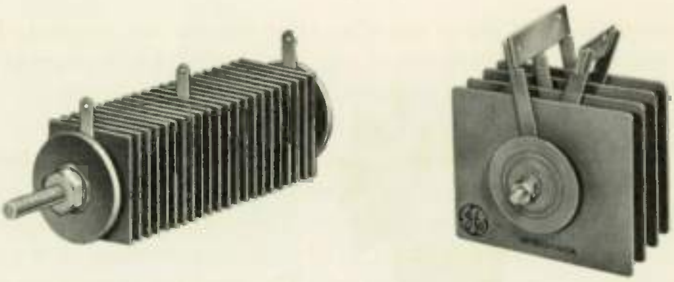

Fig. 13 Some typical metallic rectifiers. (Courtesy: General Electric Co.)

to silicon diodes which are readily available with inverse voltage ratings as high as 1,000 volts. As a result, selenium diodes must usually be connected in series to build up to the required back voltage ratings. Also, it is common to build selenium units to provide full-wave or bridge rectification, thus further increasing the number of diodes in a unit.

The composition of a selenium plate is shown in Fig. 14. It consists of an aluminum backing plate to which a thin layer of selenium is applied. The purpose of the backing plate is to furnish mechanical strength, to help carry away the heat, and to act as the anode electrical connection to the selenium. The active metal plate or counter electrode consists of an alloy of tin, cadmium and bismuth sprayed onto the exposed surface of the selenium. A potential barrier (to be explained later) forms between the active metal plate and the selenium layer during the manufacturing process, and it is because of this barrier that rectification takes place.

The plate that forms a selenium diode must be relatively large because one or two square inches of area is required for each ampere of forward current. In contrast, a junction type can carry at least 300 amperes per square inch of junction area. The plates of selenium units are kept

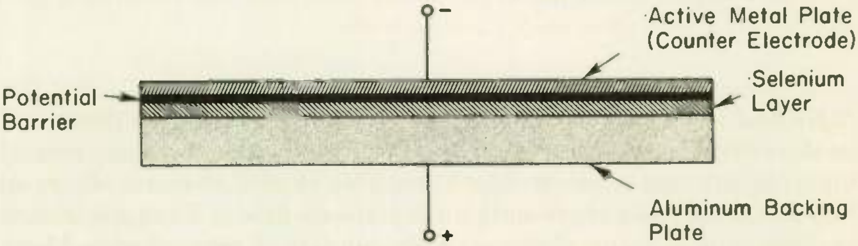

Fig. 14 Construction of a selenium rectifier cell.

well separated, as the figures show, so that the air can circulate freely between them to carry away the heat. The large plates provide sufficient area with the air so that heat sinks are not necessary.

Compared to junction rectifiers, metallic rectifiers have other disadvantages besides their large size. Metallic rectifiers have a lower back resistance than junction rectifiers. They also have a considerably higher resistance in the conducting direction, resulting in a greater power and voltage loss in the rectifier. The forward resistance unfortunately increases with time (called aging) until after perhaps 100,000 hours or 10 years of normal operation the losses are so great that selenium type rectifiers are no longer useful. Aging stops in copper oxide rectifiers after one year, so that these rectifiers have a much longer useful life. Aging of selenium rectifiers is rapidly increased by overloading, or by any use that raises their temperature above 100° C. Junction type rectifiers are not subject to aging, and have an indefinite life.

Selenium rectifiers are also subject to *unforming*. This means that they temporarily lose their rectifying properties when left inactive for some time. An unformed unit will usually return to normal operation after a few cycles of active operation. If you suspect a selenium stack of being badly unformed, you should apply the voltage gradually until normal operating voltage is reached.

19 HANDLING AND CHECKING SEMICONDUCTORS . . . When soldering a diode or transistor into a circuit, hold the pigtail leads between soldering point and diode with a pair of long-nose pliers. The pliers act like a heat sink to conduct the heat away from the semiconductor. Keep the pliers in place long enough to allow the solder to cool. Keep the pigtails as long as convenient to avoid overheating by soldering up too close to the diode. Use only the minimum heat needed to give a good solder connection.

The proper checking of diodes requires the application of a test forward current on the order of the value of current that the diode normally carries, and the application of a back voltage approximately equal to the back voltage values normally used with the diode. Most transistor testers include means for conveniently and reliably checking diodes. A diode test requires checking for too high a forward voltage drop with normal forward current value, and for too low a back resistance at normal back voltages.

A rough diode check, good enough to detect shorted or open units, can be made with an ohmmeter. The back resistance should measure much higher than the forward resistance. Other than making this observation, no interpretation should be made of the measured resistance values, since the resistance values under normal operating conditions will be far different.

LESSON 2401-3

USING SEMICONDUCTOR DIODES

EXAMINATION

Circle the number of the correct answer for each question that follows. When you are finished, transfer the answers to the answer sheet by putting X's in the proper squares. When the graded answer sheet is returned to you, correct in this book any questions you may have missed. By doing so, you will have a record of the correct answers to all questions for review purposes.

1. When the forward current through a certain junction diode is 20 ma, the voltage drop across the diode is 1.5 volts. If the current through the diode is doubled to 40 ma, the voltage drop across the diode will be
   (1) less than 1.5 volts.
   (2) approximately 1.5 volts.
   (3) between 1.5 and 3 volts.
   (4) approximately 3 volts.

2. The reverse current through a certain diode is 20 μa when the reverse bias is 50 volts. If the reverse bias is doubled to 100 volts the reverse current will be
   (1) less than 20 μa.
   (2) 20 μa.
   (3) between 20 and 40 μa.
   (4) 40 μa.
   (5) over 40 μa.

3. A junction diode starts to conduct freely in the reverse direction when the reverse voltage is raised above a certain value. This phenomenon is called
   (1) reverse voltage conduction, and usually damages the diode.
   (2) hole conduction. It is damaging to the diode.
   (3) hole conduction. The breakdown itself does not damage the diode.
   (4) avalanche breakdown. It is damaging to the diode.
   (5) avalanche breakdown. It does not in itself damage the diode.

4. When the temperature of a semiconductor diode increases,
   (1) the forward voltage drop increases and the reverse current decreases.
   (2) the forward voltage drop increases and the reverse current increases.
   (3) the forward voltage drop decreases and the reverse current decreases.
   (4) the forward voltage drop decreases and the reverse current increases.

5. How does total hours of operation affect the forward voltage drop across semiconductor diodes?
   (1) The forward voltage across all semiconductor diodes increases with hours in use.
   (2) The forward voltage across all semiconductor diodes decreases with hours in use.
   (3) Hours in use has little effect on the forward voltage.
   (4) The forward voltage increases with hours in the case of selenium but not for junction diodes.
   (5) The forward voltage increases with hours in the case of junction diodes, but not for selenium.

6. Which of the following resistance values would you select for equalizing resistors to use with four 1N63 diodes connected in series in order to get the best voltage equalization?
   (1) 500,000 ohms (2) 350,000 ohms (3) 200,000 ohms

7. A certain silicon diode has a forward current rating of 400 ma at 25° C. What is the forward current rating at 75° C?
   (1) Not recommended for use at this high a temperature.
   (2) 120 ma
   (3) 280 ma
   (4) 400 ma
   (5) 528 ma
   (6) 680 ma

8. The most complete way to check the condition of a diode is to
   (1) use an ohmmeter and compare forward with reverse resistance. The back resistance should be at least 100 times the forward resistance.
   (2) measure voltage drop with normal forward current, and reverse current with normal back voltage.
   (3) apply rated voltage and measure forward current.
   (4) measure back resistance with 5 volts across diode.

9. A good precaution to follow in soldering a diode into a circuit is to
   (1) use a large enough soldering iron to heat the joint quickly, before the diode itself overheats.
   (2) use 50-50 solder, which has a lower melting point than ordinary radio solder.
   (3) use solder with separate resin flux, rather than resin-cored solder.
   (4) hold diode lead with pliers between soldering point and diode.

10. To properly mount a diode or transistor to a heat sink you should
   (1) use a lubricant such as silicon grease between surfaces being joined and tightened with a torque wrench.
   (2) polish the surfaces to be joined with steel wool and then apply a thin film of oil to prevent oxidation between the joining surfaces.
   (3) check for good contact between joining surfaces, and then tighten lightly.
   (4) tighten joining surfaces tightly so as to insure good contact for best heat transfer.

11. For operation at high frequency you should choose a diode with
   (1) a low capacitance.
   (2) a high back resistance.
   (3) low lead inductance.
   (4) linear response characteristics.

12. What is meant by *unforming,* and how can the condition be corrected?
   (1) A loss of rectifying properties in selenium diodes due to inactivity. Apply voltage slowly to correct.
   (2) Same as (1) above, but can occur in any solid-state diode.
   (3) A separation at the junction between P and N materials, resulting in a high voltage drop and poor rectifying properties. Apply twice maximum rated current for 10 seconds to fuse the two sections together.

13. Why are diodes sometimes connected in series?
   (1) To increase the back resistance.
   (2) To reduce the voltage drop.
   (3) To increase the current carrying capacity.
   (4) To increase the reverse voltage rating.

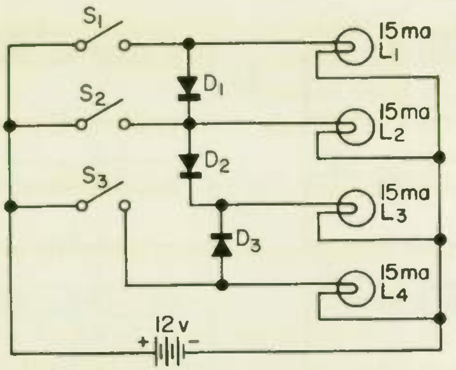

Fig. 15

14. Referring to Fig. 15, when switch S_1 only is closed, what lights are on?
    (1) L_1 only
    (2) L_1 and L_2
    (3) L_1, L_2, and L_3
    (4) All of the lights are on
    (5) L_2 only
    (6) L_2 and L_3
    (7) L_2, L_3, and L_4
    (8) L_3 and L_4

15. Referring to Fig. 15, when switch S_2 only is closed, what lights are on? (Select answer from choices for Question 14) ______

16. When switch S_3 only is closed, what lights are on? (Select answer from choices for Question 14) ______

17. Assuming that each lamp draws 15 ma, then diode D_1 and diode D_2 should have average forward current ratings of not less than (HINT: First determine which switches could possibly cause D_1 and D_2 to conduct. Then find the total current through each for *all* possible conditions.)
    (1) 15 ma for D_1 and 30 ma for D_2.
    (2) 30 ma for D_1 and 15 ma for D_2.
    (3) 15 ma for each.
    (4) 30 ma for each.
    (5) 45 ma for D_1 and 30 ma for D_2.
    (6) 30 ma for D_1 and 45 ma for D_2.

18. Assume in Fig. 15 that all the diodes are 1N63's, whose characteristic curves are shown in the lesson. While all the lamps are intended for 12-volt operation, the voltage across some may be less than 12 volts because of the voltage lost across any diodes in series. The voltage across a lamp may be less when one switch is closed than with another closed. When lamp L_1 is lit, what is the minimum voltage that would be across it? (Assume each lamp draws 15 ma.)
    (1) 1.6 volts
    (2) 2.3 volts
    (3) 3.2 volts
    (4) 8.8 volts
    (5) 9.7 volts
    (6) 10.4 volts
    (7) 12 volts
    (8) None of the above

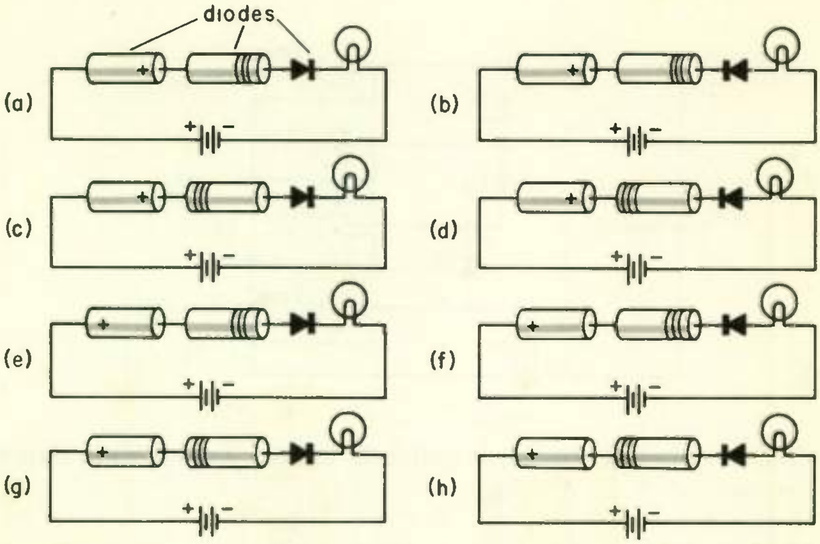

Fig. 16

19. When lamp L_2 is lit, what is the *minimum* voltage that would be across it? (HINT: First determine which switches could possibly cause L_2 to light and what other lamps are lit at the same time. Then find the *total* current through any series diode before finding the voltage drop across the series diode.) (Select answer from choices for Question 18.) ________

20. When lamp L_3 is lit, what is the *minimum* voltage that would be across it? (Select answer from choices for Question 18.) ________

21. When lamp L_4 is lit, what is the *minimum* voltage that would be across it? (Select answer from choices for Question 18.) ________

22. In which circuit of Fig. 16 is the lamp burning?

(1) (a)	(5) (e)
(2) (b)	(6) (f)
(3) (c)	(7) (g)
(4) (d)	(8) (h)

END OF EXAM


CLEVELAND INSTITUTE OF ELECTRONICS

CLEVELAND INSTITUTE OF ELECTRONICS / CLEVELAND, OHIO

DONE #1

electronics

CLEVELAND INSTITUTE OF ELECTRONICS / CLEVELAND, OHIO

Electrons in Action
Part I

2311-4

An AUTO-PROGRAMMED™ Lesson

ABOUT THE AUTHOR

We chose Mr. Doyle to write this lesson because of his ability to bring out important concepts in an easy to understand manner.

Mr. Doyle has had much experience in teaching electronics, and has been writing lesson material for home-study use for the last several years.

Because of his long years of practical experience, Mr. Doyle is able to sort the wheat from the chaff, eliminating material of no practical importance, and concentrating on those concepts needed for your rapid advancement.

Mr. Doyle is the author of the textbook *Pulse Fundamentals,* published by Prentice-Hall. He is a member of the Institute of Electrical and Electronic Engineers and a senior member of the Society of Technical Writers and Publishers.

AUTO-PROGRAMMED Lessons

The Cleveland Institute of Electronics has been a pioneer in the field of programmed learning. This is the technique that increases learning and retention . . . while decreasing effort. Where the subject matter permits, all CIE lessons are programmed. Only Cleveland Institute has AUTO-PROGRAMMED lessons. They represent the finest available educational material. All information is presented in small "bites" and you constantly have an opportunity to check your learning before you proceed to a new idea. You learn more quickly, retain the information longer, and all with less effort on your part. AUTO-PROGRAMMED Lessons are one more reason why Cleveland Institute courses are the most effective electronic programs available today. The proof is in the results . . . as you will see!

Accredited by the Accrediting Commission of the National Home Study Council

The Accrediting Commission has been approved by the U. S. Office of Education as a "nationally recognized accrediting

CLEVELAND INSTITUTE OF ELECTRONICS

Electrons in Action
Part I

By JOHN M. DOYLE
Technical Staff
Cleveland Institute of Electronics

2311-4

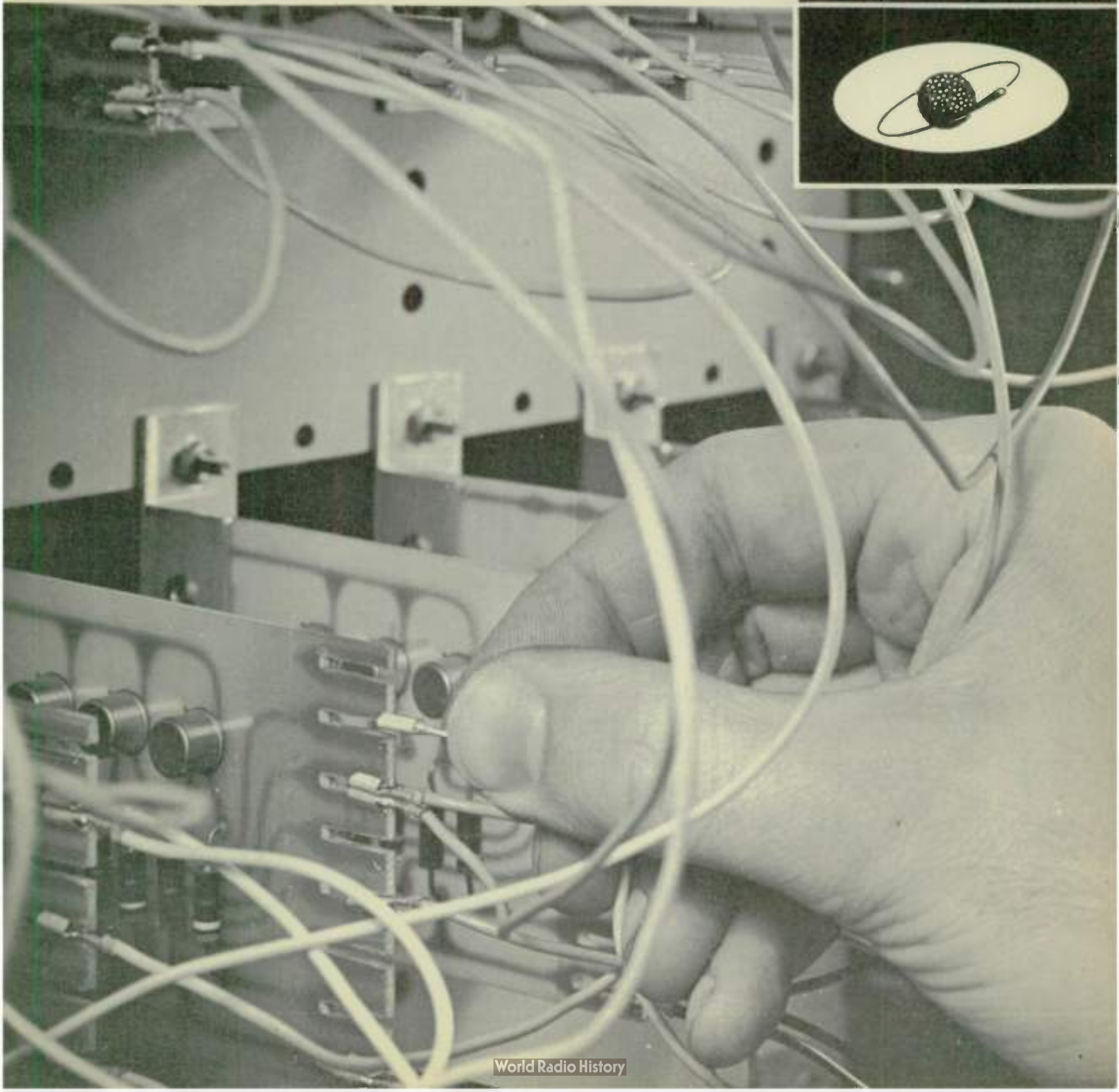

In this lesson you will learn...

Frontispiece: *The action of electrons is necessary for this transistorized digital logic circuit, and all other electronic devices to operate.* Courtesy, Tech. Serv. Inc.

FIFTH EDITION / Second Printing / August, 1967.

How to Start TODAY *toward advancement*

Here's how to complete your first lesson. It will take but a few hours. You will then be on your way to more interesting work, security and better pay. Follow the steps below in order, checking off each one as completed. Start TODAY.

☐ 1. Take two minutes to read *Tips on How to Study* on the next page. All finished? Then check box to left.

☐ 2. Read Chat with Your Instructor on page 1 to get a bird's-eye view of what you will learn in this lesson. Then the lesson will go faster and easier. Check box when finished.

☐ 3. Read Topic 1 on page 2, which tells you about two different kinds of electric charge, and how they react with each other.

☐ 4. Answer the What Have You Learned questions on pages 2 and 3. By doing so you will be sure that you have the laws of charges straight. You will also gain a broader understanding of charges and some practical uses made of them. As soon as you answer a question, check with our answer.

☐ 5. Continue on in the same way to the end of the lesson, first carefully reading each Topic and then answering the What Have You Learned? questions. Don't skip any questions. Reading alone is not enough. It is the questions that put your mind to work, so that you learn more for the time spent, and know how to put what you have learned to work on the job. Remember that if you want a better job than the other fellow, you must know more about electronics than he does. The What Have You Learned? questions will give you that extra help, putting you above the rank and file technicians.

☐ 6. Any questions? Your instructor is standing by to help you. Write your questions on one of the Request for Assistance forms supplied. Page 19 tells you how to get the best results when asking for help.

☐ 7. Read the inside back cover for further information you should know about your training program.

☐ 8. Now answer the examination questions. You will find instructions at the top of the questions. Double check all your answers, referring back to the text when in doubt. As soon as finished – don't wait another day—mail in to us for your instructor to check over. He wants to make sure you understand this first lesson, and give you any suggestions and help that he thinks will be useful for your rapid advancement. He will require you to restudy the lesson if your grade is less than 75 percent.

☐ 9. Now start studying the next lesson; never wait for the return of the examination on the lesson just finished before starting the next one.

How to Study

Some tips for fast progress

1. Don't try to study too long at a time—an hour or two is plenty. Work hard while you work, but take a five minute break every half hour.

2. Keep all your training materials together and handy—ready to go—including pencils, paper, envelopes and stamps—get organized so as to get full benefit from your study time.

3. Plan now the best time and place to study, the days you will study, and how long. A plan that calls for one or two hours of study a day, five or six days a week, will give good results.

4. Don't hurry over the first few lessons because they appear similar to material you have studied before. If you do, you will miss a lot, so that the following lessons will be harder. Hurrying will lose you time in the long run.

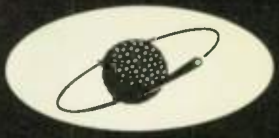

A chat with your instructor

Electricity can either be in motion, (like cars on the highway), or at rest, (like parked cars).

In this lesson you will learn about the uses you can make of electricity at rest. Parked cars are of use to us only in that they are available to put into motion when needed. Similarly electricity can't do much for us as long as it is at rest. But it is of great value in electronics as a standby, ready to go into motion when needed. A device specifically designed to store electricity in a static condition until needed is called a capacitor. All electronic equipment uses many capacitors for this purpose. A capacitor is like a parking lot, filled with cars ready to go into action when wanted.

Almost any device, a glass rod for example, will store a little electricity at rest, like a few cars can find a place to park along the highway. Electricity at rest often accumulates on objects by friction. It is then called static electricity. The electricity in a capacitor is exactly the same kind of electricity, but people don't usually call it static electricity, even though it really is.

After you understand the characteristics of static electricity, you will learn in this lesson how it is put into motion to form current electricity. Unless you know how to put it into motion and steer it to where you want it to go, electricity at rest is as useless to you as a car you don't know how to drive.

Electrons in Action
Part I

ELECTRIC CHARGES

One of the oldest and simplest methods of producing electricity is by friction. You may already have found that a comb, after you rub it through your hair, will attract tiny pieces of paper. This is because the rubbing has charged the comb with electricity. Electricity produced by friction is usually called *static electricity*. A body holding electricity is said to be *charged,* and the electricity on the body is called the *charge*.

1 LIKE CHARGES REPEL; UNLIKE CHARGES ATTRACT... Experience shows that there are two distinct types of electric charge, and they are called *positive* and *negative*. When two bodies charged with the same type of electricity are brought close together, they will repel each other. If one body is positively charged and the other is negatively charged, the two bodies will attract each other. In short, *like charges repel and unlike charges attract.*

WHAT HAVE YOU LEARNED?

1. When a glass rod is rubbed with silk, the rod becomes positively charged. When two glass rods rubbed with silk are brought close together as shown in Fig. 1(a), they (a) *(attract)* [✓ *(repel)*] each other. This is because both rods are (b) [✓ *(positively)*] *(negatively)* charged and therefore have (c) [✓ *(like)*] *(unlike)* charges. Like charges (d) REPEL each other.

2. When an ebonite rod is rubbed with fur, it becomes negatively charged. When two ebonite rods rubbed with fur are brought close together, as shown in Fig. 1(b), they (a) REPEL each other. This is because (b) LIKE charges repel each other.

3. When a charged ebonite rod and a charged glass rod are brought close together, as shown in Fig. 1(c), they (a) ATTRACT each other.

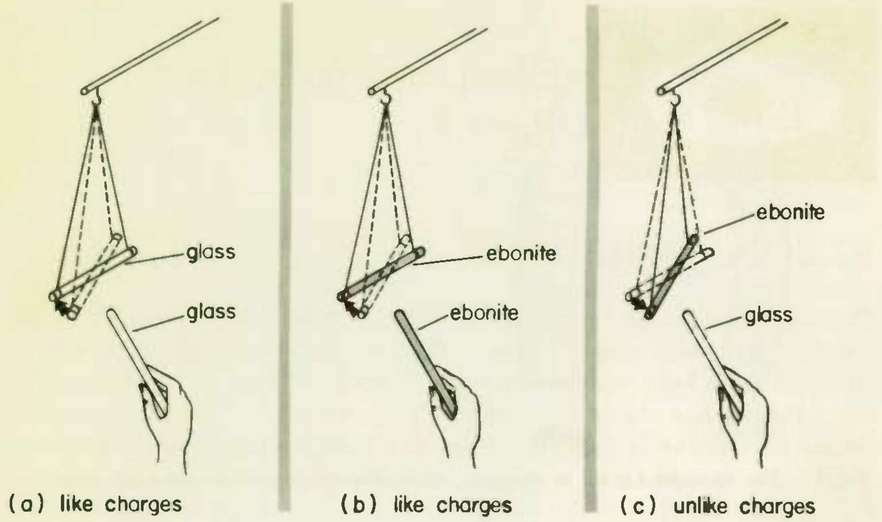

(a) like charges (b) like charges (c) unlike charges

Fig. 1

This is because the rods have (b) *(like)* [✓ *(unlike)*] charges and these charges (c) ATTRACT each other.

4. Take a rubber comb and rub it on a sheet of paper. You will find that the comb now attracts the paper. This shows that the comb and paper have assumed electric charges. We know that these charges are UNLIKE because they attract each other.

5. The hair of some people often stands on end after being combed on a very dry day. Why?

6. A capacitor is a device specifically designed to store relatively large electric charges. When a capacitor is charged, one plate has a negative charge and the other plate has a positive charge. The plates [✓ *(attract)*] *(repel)* each other.

7. One type of air cleaner passes the dust-laden air between two plates, one of which is charged negatively and the other positively. Particles of dust in the air that are positively charged will be pulled over onto the NEGATIVE plate, and oppositely charged particles of dust will be pulled to the other plate.

ANSWERS

1. (a) Repel; (b) positively; (c) like; (d) repel   2. (a) Repel; (b) like

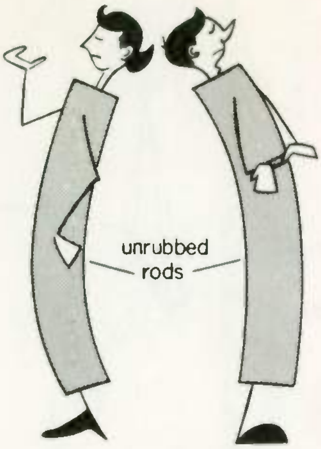

Fig. 2 The unrubbed glass or ebonite rods neither repel nor attract each other.

3. (a) Attract; (b) unlike; (c) attract 4. Unlike
5. The combing puts a like charge on every strand of hair. The strands of hair thus repel each other and separate from each other as far as possible.
6. Attract 7. Negative

2 WHAT ELECTRIC CHARGES ARE . . . Suppose we take two glass or two ebonite rods, such as those used to demonstrate the presence of electric charges in Fig. 1, and we do not rub them with silk or fur, respectively. When these unrubbed rods are placed near each other they neither attract nor repel each other (see Fig. 2). Why is this so, and how did the act of rubbing produce the electric charges? To answer these questions, we must leave the rods momentarily and take a quick look at the structure of matter.

As you probably know, everything in the world is made up of minute particles that are so small they cannot be seen, even when using the most powerful optical microscope. These particles are called molecules. Each molecule is usually made up of several still smaller particles called atoms. From the electronic point of view, it is not the molecules or atoms as a whole that are interesting; rather, it is certain parts and combinations. In particular, our interest is aroused by three particles called *electrons, protons,* and *ions*. Each of these three particles contains an electric charge!

An electron is the smallest common particle of matter and has little mass (weight). A proton has a mass about 1800 times that of the electron. An ion is made up of electrons and protons in unequal numbers, and it therefore has greater mass than either an electron or a proton.

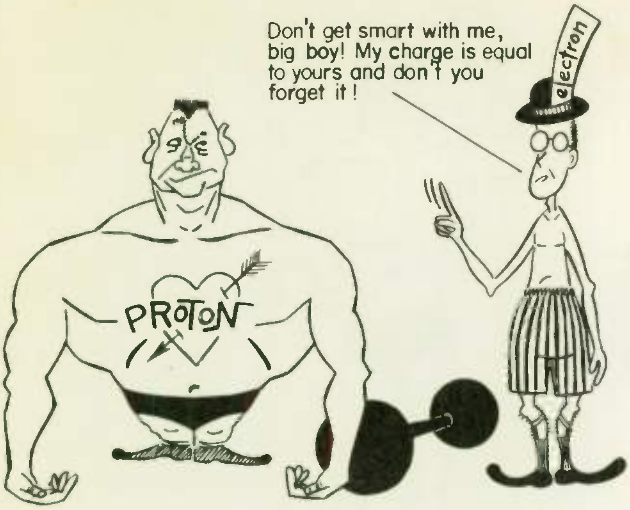

Fig. 3 A proton has much greater mass than an electron, but the charges carried by the two bodies are of equal intensity.

The kind of charge carried by an electron is called a *negative charge;* it is indicated by the minus sign, —. A proton will be attracted to an electron, which shows that the two particles have unlike charges. The charge on the proton is therefore called a *positive charge* to distinguish it from charges of the type found on electrons. An ion may have either a positive or a negative charge.

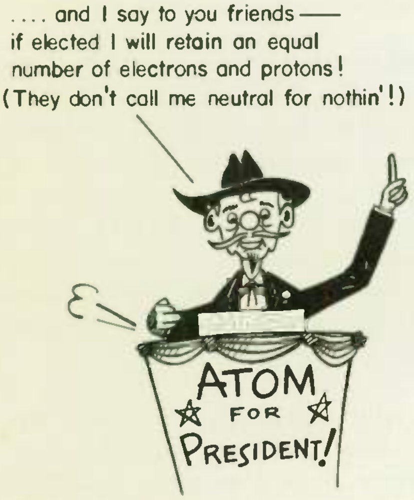

Fig. 4 An atom is normally electrically neutral.

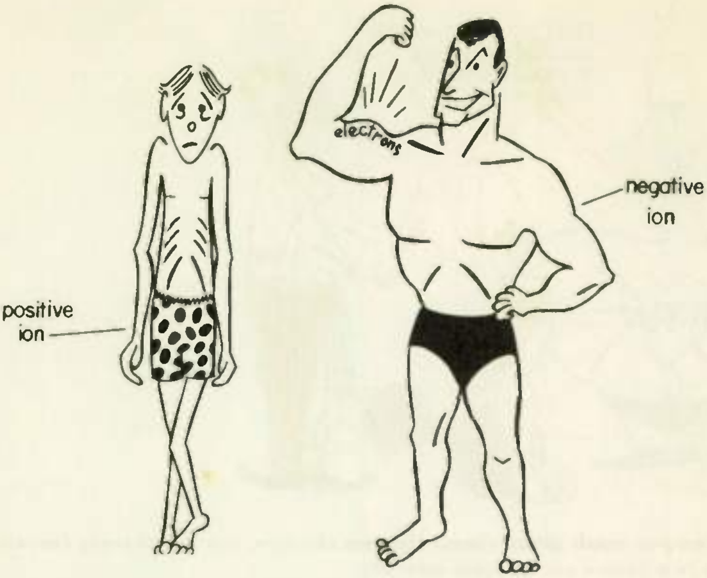

Fig. 5 A negative ion is an atom or a group of atoms having an excess of electrons, while a positive ion has a deficiency of electrons.

The charge carried by a proton is exactly equal in intensity to the charge carried by an electron. That is, two electrons will repel each other with a force equal to the force of repulsion between two protons. Also, the force of attraction between an electron and a proton is exactly equal to the force of repulsion between two electrons or between two protons (see Fig. 3).

Normally, an atom contains an equal number of electrons and protons. The unlike charges of these two bodies, being of equal intensity, act to cancel each other. Thus, a normal atom is electrically neutral; that is, it contains no net charge. This is illustrated in Fig. 4.

Sometimes, however, electrons break away from their "parent" atom and move to a neighboring atom. An atom that has an excess of electrons is called a *negative ion,* while an atom or group of atoms that has a deficiency of electrons is called a *positive ion.* The formation of ions may be thought of as shown in Fig. 5.

It should be noted at this point that when any object contains a surplus of electrons, it is said to be *negatively charged,* and that when any object has a deficiency of electrons, it is said to be *positively charged.*

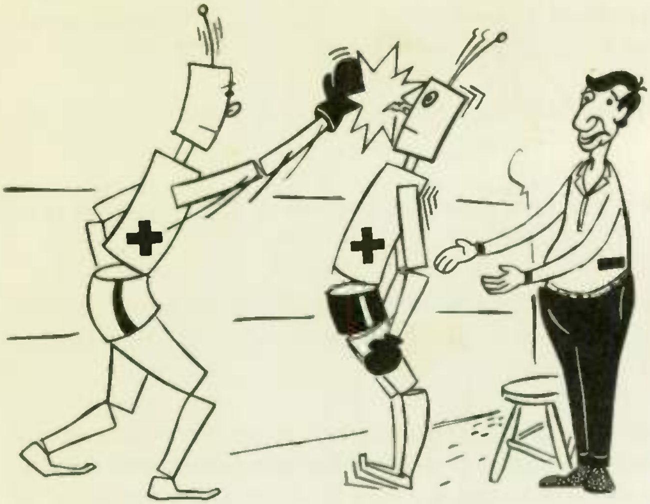

Fig. 6 Like charges repel; unlike charges attract.

An electric charge is an invisible force that is created by either an excess or a deficiency of electrons. When there is a deficiency of electrons, the charge is *positive;* when there is an excess of electrons, the charge is *negative*. Charges behave according to the laws of attraction and repulsion: like charges repel; unlike charges attract.

To help you remember the action taking place between like and unlike charges, we have prepared the animated sketch of Fig. 6.

WHAT HAVE YOU LEARNED?

1. The smallest common particle of matter is the (a) ElecTRON, and it carries a (b) NEgATiVE charge.

2. A particle that always carries a positive charge equal in intensity to the negative charge of an electron is known as a PRoTON.

3. An ion is an atom or group of atoms that has either an excess or a deficiency of electrons. If the atom has an excess of electrons, it is known as a (a) NEgATiVE ion, and if it has a deficiency of electrons it is known as a (b) PoSiTiVE ion.

4. The law of attraction tells us that (a) UNLiKE charges attract. Thus, an electron and a (b) PRoTON will attract each other.

5. The law of repulsion tells us that (a) LiKE charges repel. Thus, two electrons (b) REPEl each other.

6. A substance with a deficiency of electrons will show a POSiTiVE charge.

7. Any substance containing an equal number of electrons and protons is electrically NEuTRAl.

8. Since the plate of an electron tube attracts electrons emitted from the tube's cathode, the plate evidently possesses a POSiTiVE charge with respect to the cathode.

9. Chemical action within a battery places a negative charge on its negative terminal and a positive charge on the other terminal. A copper wire has many electrons that are free to move along the wire. If a length of copper wire is connected between the terminals of a battery, the positively charged terminal will (a) ATTRACT the electrons within the wire, while at the same time the negative charge at the other terminal will (b) REPEl these electrons. As a result the mobile electrons within the wire move along the wire from the (c) NEgATiVE terminal at the battery to the other terminal.

10. In a cathode-ray tube a stream of electrons is shot from an electron gun as shown by the dashed lines in Fig. 7. Plates *A* and *B* are oppositely charged, so that one attracts and the other repels the electron beam, thereby bending it toward plate *A* as shown. Plate *A* is (a) POSiTiVEly charged, and plate *B* is (b) NEgATiVEly charged.

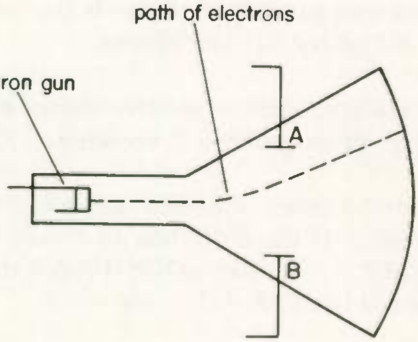

Fig. 7

ANSWERS

1. (a) Electron; (b) negative 2. Proton 3. (a) Negative; (b) positive
4. (a) Unlike; (b) proton 5. (a) Like; (b) repel 6. Positive
7. Neutral 8. Positive 9. (a) Attract; (b) repel; (c) negative
10. (a) Positively; (b) negatively

3 PRACTICAL ASPECTS OF STATIC ELECTRICITY . . . Now that you have seen how static electricity may be produced, let's take a look at some of the ways in which it can be both a help and hindrance to us.

Perhaps the biggest display of static electricity is the common thunderstorm. During a thunderstorm, small water droplets which make up the clouds become electrically charged because of friction caused by their violent agitation. As these droplets form into large clouds, their total collective charge becomes great enough for an arc—the lightning—to occur between oppositely charged clouds or between clouds and the earth.

Static electricity can be quite a problem in industry. A number of explosions have been caused in vapor-laden atmosphere by sparks that resulted from static charges generated by leather or rubber belts rubbing against their drive pulleys. That chain you see dangling from the rear of a gasoline truck is used to discharge any static charge built up in the tank by the friction of gasoline sloshing around in the tank.

Although static electricity causes its share of problems, it also has its practical application. Electrostatic paint spraying, which will place an even coat of paint on an otherwise difficult to paint surface, relies on the principle of attraction between oppositely charged bodies. As shown in Fig. 8, the work to be painted is connected to the positive terminal of a very high voltage d-c power supply and this places a positive charge on the work. The other terminal of the supply is connected to the spray gun, which is grounded for safety. This places a negative charge on the gun and on the particles of spray leaving it. Since the paint spray leaving the nozzle of the spray gun and the object being painted are of opposite charge, the paint spray will be attracted to the object. The result is that nearly all the paint reaches the object and very little paint is wasted. This type of spraying is especially effective on such objects as spoked wheels or wire fencing which would be difficult to paint otherwise.

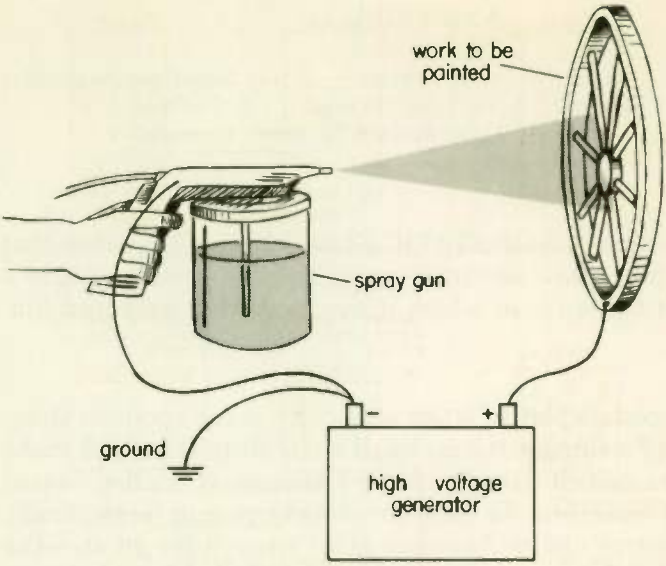

Fig. 8 **Electrostatic paint spraying.**

ELECTRIC CURRENTS

4 CHARGE MOVEMENT THROUGH A CONDUCTOR . . . The movement or flow of electricity (charge) from one point to another is called an electric current. Moving charge from one point to another by means of a conducting wire is similar to moving water from one point to another by means of a pipe. In Fig. 9(a) water is shown moving from tank *A* to tank *B* by means of the connecting pipe. In Fig. 9(c) the electricity moves from one charged body to the other by means of the connecting wire. Neither the water nor the electricity will move, however, unless there is a pushing or pulling action to cause the movement. Gravity provides the force in Fig. 9(a). The attraction between opposite charges and the repulsion between like charges provides the force in Fig. 9(c).

The negative charge on the left-hand body of Fig. 9(c) is due to there being more electrons than protons in that body. Electrons, being extremely light in weight, tend to be mobile. Some of them, called *free electrons,* readily move around in certain materials, particularly metals. When a metal wire is connected between two charged bodies, as shown in Fig. 9(c), free electrons, being negatively charged, are repelled into the connecting wire by the negative charge on the left-

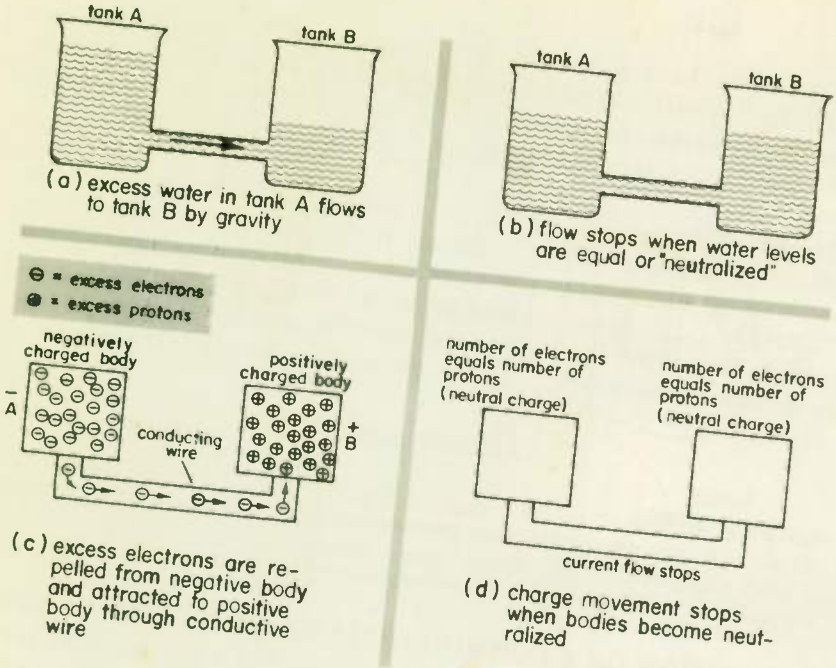

(a) excess water in tank A flows to tank B by gravity

(b) flow stops when water levels are equal or "neutralized"

(c) excess electrons are repelled from negative body and attracted to positive body through conductive wire

(d) charge movement stops when bodies become neutralized

Fig. 9 **Illustrating the movement of charge (current flow).**

hand body. At the same time, these free electrons are attracted by the positive charge on the right-hand body. As a result, free electrons move through the connecting wire from the left body to the right body, and this constitutes a current.

Water flow from tank *A* to tank *B* stops, as shown in Fig. 9(b), when the levels become equal or "neutralized." The movement of charge stops, as shown in Fig. 9(d), when the left body loses its excess electrons and the right body gains enough electrons that it no longer has an excess of protons. When both bodies are neutralized (that is, uncharged), there are no longer any forces of either attraction or repulsion to cause a movement of electrons along the wire.

WHAT HAVE YOU LEARNED?

1. In an electrical conductor, some electrons are held in place while others are (a) FREE to move about. The moving electrons are, therefore, called (b) FREE electrons.

2. A flow of positive ions results in an electric current. [✓ *(true)*] *(false)*

3. In order to have a current flow, there must be two oppositely charged bodies with a conducting path between them. When a wire is connected between the terminals of a battery, a current flows. This shows that the battery terminals are OppositEly charged.

4. The negative terminal of a battery is negatively charged, and the positive terminal is positively charged. If a wire is connected between the two terminals, free electrons are repelled through the wire by the (a) NEGATIVE terminal and attracted by the (b) positIVE terminal. Therefore, the direction of electron movement through the wire is from the (c) NEGATIVE terminal to the other terminal.

ANSWERS

1. (a) Free; (b) free
2. True . . . A current results from the movement of an electric charge. Since ions carry charges, their movement forms a current.
3. Oppositely 4. (a) Negative; (b) positive; (c) negative

5 PRODUCTION OF A CONTINUOUS CURRENT . . . In the circuit of Fig. 9(c) current flow lasts only a fraction of a second or so after the wire is connected between the two charged objects. As soon as the excess electrons are drained from the negatively charged body and gained by the positively charged body, both bodies lose their charge and current flow ceases.

In order to produce a continuous current flow, it is necessary to have some way of maintaining opposite charges on the two bodies after a wire is connected between them. This can be done by an electron pump.

Figure 10(a) is the same as Fig. 9(c) except that an electron pump has been added. As fast as electrons leave charged body *A* through the wire at the bottom, more electrons are pushed back onto the plate by the action of the pump. Similarly, electrons are pumped off body *B* as fast as they can arrive. As a result, body *A* stays negatively charged, body *B* stays positively charged, and there is a continuous current flow through the conducting wire.

A battery is one example of an electron pump. It consists of two plates, one positively and one negatively charged, that are immersed in a chemically active liquid or paste, called the *electrolyte,* as shown in Fig. 10(b). The battery plates, *A* and *B,* correspond to charged bodies *A* and *B* in Fig. 10(a). The action of the electrolyte is to keep

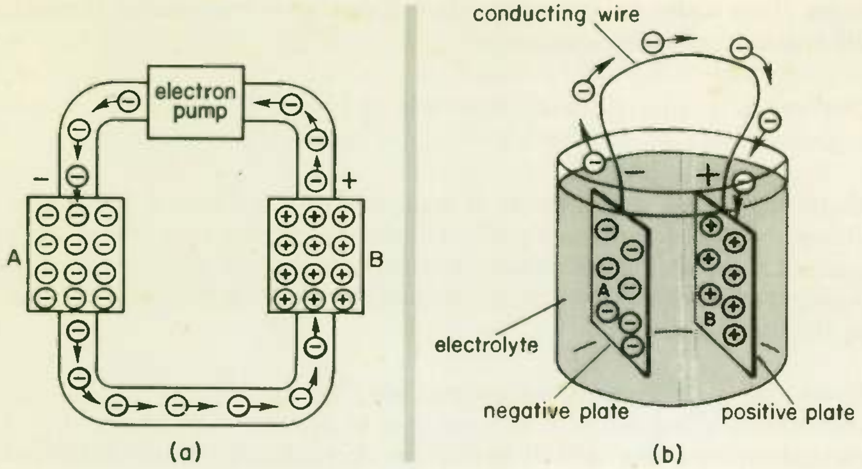

Fig. 10 An electron pump keeps charges on the bodies so that there is a continuous current flow. A battery is an electron pump.

plate *A* continuously negative by forcing onto it additional electrons to replace those flowing off through the conducting wire that forms the battery circuit. Similarly, the electrolyte keeps plate *B* positively charged by removing electrons from it as fast as they arrive through the conducting wire.

WHAT HAVE YOU LEARNED?

1. Figure 10(a) shows that the action of an electron pump is to move free electrons from the (a) Positively____ charged plate over to the other plate. The pump must exert force in order to do this, because the free electrons are (b) Repelled____ by the plate to which they are being pumped and therefore want to move in the opposite direction.

ANSWERS

1. (a) Positively; (b) repelled

6 WHAT AN ELECTRIC CURRENT IS . . . The term "electric current" refers to the process of transferring electric energy from one point to another. Usually this process is carried out by the movement of positively or negatively charged particles, such as electrons and ions. By far the most common process is the movement of free elec-

trons. This is the way in which electric energy is transferred through all ordinary metallic conductors.

Current flow through many liquids is by means of both positive and negative ions moving simultaneously in opposite directions.

Current flow in certain parts of a transistor is by means of positive charges called holes. You will see in a later lesson that alternating current flows through a capacitor, although in some cases there is no movement of charged particles within the space between the plates of the capacitor.

From the preceding discussion you see that an electric current can result from a number of different types of action. Many years ago an electric current was defined as electron flow, but this is too restricted a definition for the modern world of electronics.

7 CURRENT DIRECTION... Current direction does not refer to the direction that electric charges move. Instead, current direction is nothing more than an agreed upon direction for tracing around a circuit, and a reference direction for stating electrical laws.

Consider the circuit of Fig. 11. One way to trace around the circuit is to start at the positive terminal of the battery and trace around until you come back to the negative terminal, as shown by the solid arrows. Engineers that trace in this direction (that is, from positive to negative) are said to use *conventional* current direction.

The alternate way to trace around a circuit is to start at the negative battery terminal and trace around to the positive terminal, as shown by the dotted arrows in Fig. 11. This tracing direction is called the *electron* current direction. It is named from the fact that this is also the direction that the free electrons that carry the charges move in the circuit.

Unfortunately, everybody in electronics can't agree on which direction to use as the current direction. Practically all engineers, engineering colleges, and engineering textbooks use the conventional current direction. But military schools, technical institutes, and technicians generally use the electron current direction, since beginners are less confused if they trace around a circuit in the same way as the electrons go.

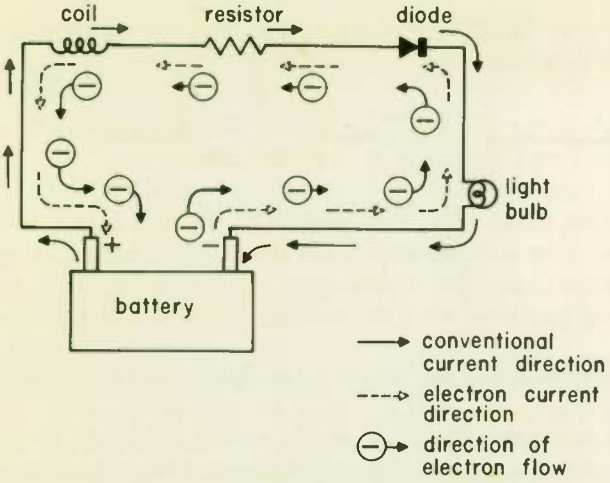

Fig. 11 **Electron flow direction and current direction. The conventional current direction, used by engineers, is opposite to the direction of electron flow.**

We always use the electron current direction in this course, since it is less confusing for students. However, you must know about the conventional direction because you will frequently have to talk to engineers and read literature where the conventional direction is used.

8 HOW TO DETERMINE CURRENT DIRECTION . . . There are a number of convenient ways to determine current direction when it is not known. If the polarity of the battery terminals is marked as in Fig. 12, the current direction through the transistor is at once known by the fact that electron current flow is always from negative to positive. A voltmeter may be used as shown to determine the battery polarity if it is not marked. With the voltmeter connected to get a

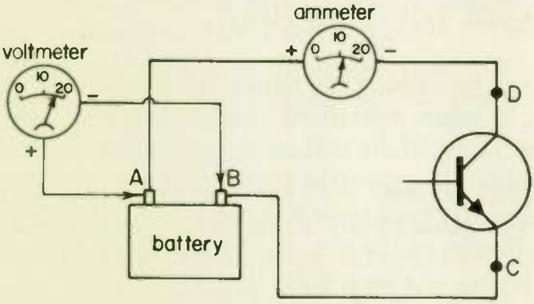

Fig. 12 **Method for finding current direction.**

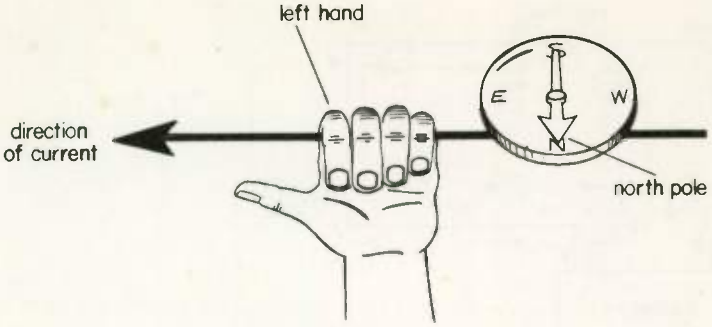

Fig. 13 **One method of determining direction of d-c current through a conductor.**

reading, the battery terminal connected to the meter terminal marked — is the negative terminal, and the other battery terminal, connected to the + terminal of the voltmeter, is the positive one.

The ammeter, Fig. 12, will also indicate current direction. Remembering again that current direction is from negative to positive, the current direction is such that the current enters the ammeter at the terminal marked — and leaves at the terminal marked +. It is assumed that the ammeter is so connected in the circuit that there will be a reading on the scale.

Figure 13 shows how a compass is used to determine current direction. The current causes the compass needle to swing at right angles to the conductor. When the fingers of the left hand are wrapped around the conductor in such a way that they point in the same direction as the north pole of the compass, the left thumb points in the direction of electron current flow. For currents less than 0.1 amp (ampere) or so, the compass will not respond, so this method cannot be used to find the direction of small currents.

WHAT HAVE YOU LEARNED?

1. Figure 14 shows a battery furnishing current to an electrical circuit. Moving free electrons, or other negatively charged particles, that form the current in the electrical circuit will move (a) *(from A toward B)* [✓ *(from B toward A)*] because the positive charge on the positive terminal of the battery will (b) [✓ *(attract)*] *(repel)* the negatively charged particles, and the negative charge on the negative terminal (c) *(attracts)* [✓ *(repels)*] the particles. If there are also positively charged particles making up part of the electric current, these particles will move from (d) [✓ *(A toward B)*] *(B toward A)*. However, no matter which way the

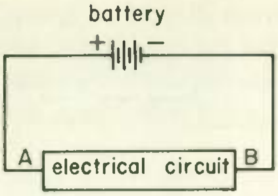

Fig. 14

particles move, the current direction as used in this course is considered to be from (e) *(A toward B)* [✓ *(B toward A)*]

2. Suppose that the electrical circuit of Fig. 14 consists of two metal plates in salt water, as shown in Fig. 15. Since salt water is a good conductor, current flows when connected to the battery as shown. The charged particles that make up the current in the salt water consists of positively and negatively charged ions in equal numbers. The positively charged sodium ions (Na) will move (a) ~~*(toward plate A)*~~ [✓ *(toward plate B)*]. The negatively charged chlorine ions (Cl) will move (b) [✓ *(toward plate A)*] ~~*(toward plate B)*~~. The current direction as used in this course is (c) *(from plate A through the salt water to B)* [✓ *(from plate B through the salt water to A)*]. If you were talking to a college-trained engineer, he would probably tell you that the current direction is (d) [✓ *(from plate A to plate B)*] *(from plate B to plate A)*, and this direction is called the (e) Conventional current direction.

3. Figure 13 shows you how to use your left hand and a compass to

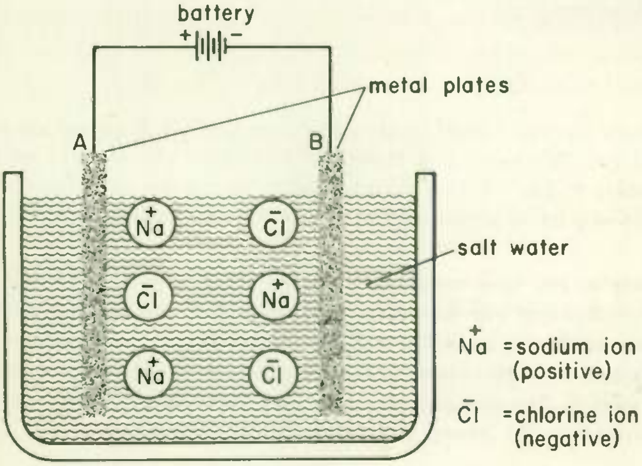

Fig. 15

determine electron current direction. A similar drawing in an engineering textbook intended for college use, would *(not differ from Fig. 13 in any important respect)* [✓ *(show the right hand used rather than the left)*] *(show the compass on the bottom of the wire rather than on top).*

ANSWERS

1. (a) From B toward A; (b) attract; (c) repels
(d) A toward B... The positive charges are repelled from the positive terminal of the battery and attracted toward the negative terminal, and hence move through the electrical circuit from A towards B.
(e) B toward A ... When you use the electron current direction, as is done in this course, you always assume the current direction to be from the negative terminal of the battery (or other voltage source) through the circuit to the positive terminal of the battery. This will be the same as the direction of free electron movement when the current consists of free electrons, which is usually the case. If the current is made up of moving positive charges, the current direction is opposite to the direction of charge movement.

2. (a) Toward plate B... The positive charged ion is attracted by the negatively charged negative terminal of the battery, and repelled by the positively charged positive terminal.
(b) Toward plate A.
(c) From plate B through the salt water to A.
(d) Plate A to plate B . . . Those who use the conventional direction always consider current direction as from the positive terminal of the voltage source through the circuit to the negative terminal.
(e) Conventional

3. Show the right hand used rather than the left. Engineering texts use the conventional direction, and therefore will show the current as opposite to the direction in Fig. 13. It is then necessary to use the right hand so that the thumb points in what is considered to be the direction of current flow.

As soon as you have completed all of the *What Have You Learned?* sections, and you are satisfied that you thoroughly understand the lesson, you should take the examination starting on page 20. *Mail it in for grading as soon as completed.* Never hold examinations until several lessons are completed, and then mail them all at once. You need to find out promptly what you did wrong in each lesson in order to get the most from the lessons that follow.

Need help? Here is how to get it.

To make it easy for you to request help, Request for Assistance forms for this purpose are supplied with your course material. The thing to remember is that the more details you give your instructor the better he can help you. The following is an example of a well-written query.

Dear Instructor:

I can't get the right answer to Problem 6 on page 8 of Lesson H-6. *Notice that student states the exact problem he is referring to and where it is located.* I believe the correct formula is $W = \frac{1}{2}E^2C$, found on page 16 of Lesson H-6. *Notice that student states where he found the formula.* My work using this formula is shown below. What am I doing wrong? I notice that if I square the E, then multiply by the C, finally taking one-half of the product thus obtained, I get the correct answer. But it seems to me that, if the formula was intended to be used in that manner, it would have been written $W = \frac{1}{2}(E^2C)$. *Notice that student comments on a method of working the problem by which the correct answer could have been obtained, and also notice that he clearly states why he does not believe that this method could be correct. Student shows his work in full, but it is not reproduced here.*

With all this information the instructor can see exactly where the difficulty lies. He is thus able to give the information needed to clear up the problem. This will not be possible if you write (as some do), "I can't get the correct answer to problem 6, please explain how to work it."

By the way, please *don't make requests for technical assistance and non-technical assistance on the same sheet.* Technical requests pertain to difficulties encountered in the lesson. Non-technical requests pertain to the shipment of lesson material, payment of accounts, requests for employment service, etc. Your technical requests are answered by your instructor, while non-technical questions are answered by another department. If they are both on the same sheet of paper, service is delayed. A single sheet of paper can go to only one department at a time.

When you submit a non-technical Request For Assistance with your examination, please place the form on top, so that when the envelope is opened, the form is seen at once. If you want technical help, this is not necessary.

ELECTRONS IN ACTION

Part I

EXAMINATION

Each question is followed by a number of selections, usually four. One and only one of these selections is correct unless the question specifically states otherwise. Circle the number in front of the correct selection for each question.

All Cleveland Institute examinations are open book; that is, it is permissible to refer back to the lesson while answering the questions.

After you have answered all of the questions, mark the numbers of the answers on the Examination form provided, in the manner in which you are instructed on the form.

> **If you have skipped any of the *What Have You Learned?* sections in the lesson, you will not be able to answer some of the examination questions. This is because the *What Have You Learned?* sections in this and all Cleveland Institute lessons bring out new principles not discussed elsewhere.**

1. A device specifically designed to store electricity in a static state is
   - (1) any battery.
   - (2) a storage battery.
   - [✓ (3)] a capacitor.
   - (4) an amplifying device, such as tube or transistor.
   - (5) an inductor.

2. An electric charge is
   - [✓ (1)] an excess of one type of charged particles over oppositely charged particles, such as more protons than electrons.
   - (2) a voltage produced by friction.
   - (3) electricity stored in a charged battery.
   - (4) an electric current.

3. Two identical combs are charged by combing your hair. If one is suspended in the center by a fine thread, and the other one brought close, they
   - (1) will be attracted to each other.
   - [✓ (2)] will repel each other.
   - (3) will neither attract nor repel.
   - (4) will either attract or repel, but not enough information is given to determine which.

4. Cleveland Institute uses a letter copying machine in which the blank paper on which the copy is to be made is given positively charged areas that conform with the black areas on the letter being copied. Powdered dry ink, which is also charged, is attracted to the charged areas and permanently bonded there by heat. What type of charge is given to the powdered ink?
   [✓ (1)] Negative
   (2) Positive
   (3) Either positive or negative is satisfactory
   (4) Can't be determined from information given

5. When a conductor is connected between two oppositely charged metal plates suspended in air, a current will flow for a moment and then stop. However, if the plates are made part of a battery, a continuous current will flow through a conductor between the two plates. Which of the following best explains why the current is continuous in one case and momentary in the other?
   (1) The voltage on the plates of a battery is much higher than the voltage on plates suspended in air.
   (2) The voltage of the battery maintains a current; the battery plates do not need to be charged.
   [✓ (3)] The charges on the two plates in air is soon conducted off, but the chemical action in a battery pumps more charge onto the plates as fast as it drains off through the conductor.
   (4) Far more current is stored in a battery than it is possible to store on plates suspended in air.

6. Which of the following best illustrates the difference between an electric charge stored in a capacitor and an electric current?
   [✓ (1)] An electric charge is stored electricity, standing by to go to work, like cars in a car pool. An electric current is electricity in motion, delivering energy from one place to another, like cars out on the road doing a job.
   (2) An electric charge is a type of electricity produced by friction, and current is electricity produced by a battery or generator. An electric charge is a voltage while current is an amperage.
   (3) An electric charge may be either positive or negative, while an electric current is always negative.
   (4) Charges or static electricity and current electricity are two distinct types of electricity. Although they have much in common, they result from different processes, and differ from each other somewhat like a real diamond differs from an artificial diamond.

7. In finding current direction by means of a compass
   [✓ (1)] use the left hand to find electron current direction and the right hand to find conventional current direction.
   (2) always use the right hand.
   (3) use the left hand for a magnetic type compass and the right hand for an electrostatic compass.
   (4) it would make no difference whether the right or left hand was used.

8. In Fig. A the direction of electron flow is as indicated. In which diagram are both the ammeter and the voltmeter connected with correct polarity?
   (1) ______ (2) ______ [✓ (3)] ______ (4) ______

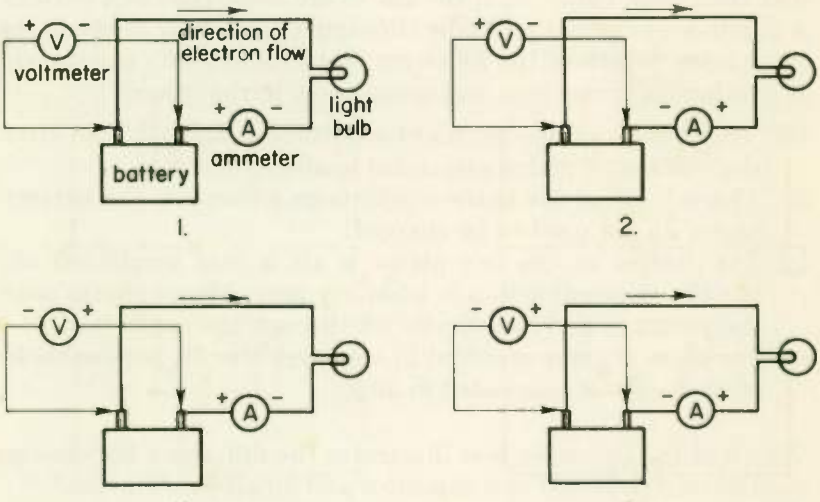

Fig. A

9. The assignment of a current direction is just a convenience for circuit tracing and analysis. The direction assigned is not necessarily the same as the direction of movement of the charged particles making up the current. As used in this course, the current direction through the resistor in Fig. B is
   [✓ (1)] from A to B. (2) from B to A.

10. If you were discussing electronics with an engineering college graduate, you would probably find that he would use the conventional current direction in tracing circuits. Thus he would think of the current direction through the resistor in Fig. B as
    (1) from A to B. [✓ (2)] from B to A.

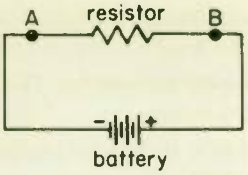

Fig. B

11. Current flow through P-type semiconductor material (used in transistors) is by means of moving positive charges, represented by plus signs in circles in Fig. C. In which diagram of that figure does the solid arrow correctly represent the direction of movement of the positive charges, and the broken arrow represent the current direction through the semiconductor, as the term current direction is used in this course?

(1) ______ (2) ______ (3) ______ [✓ (4)] ______

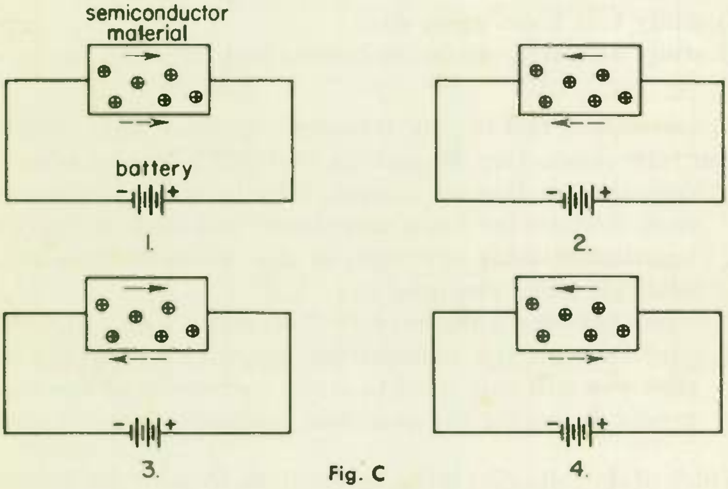

Fig. C

⊕ = moving positive charges
⟶ = direction of movement of charges
⇠ – – = current direction

12. Refer to Fig. 11. The direction of current flow in the circuit, as assumed by C.I.E., is counterclockwise because

(1) electrons flow in a clockwise direction and current flow, as assumed by C.I.E., is opposite to the direction of electron flow.

(2) there is no current flow because the diode is connected into the circuit backwards.

(3) the current flow, as assumed by C.I.E. is actually in a clockwise direction as shown by the black arrows.

[✓ (4)] electrons flow counterclockwise and current direction, as assumed by C.I.E., is the same direction as electron flow.

13. An electric current sometimes consists in the movement of ions. What is an ion?
    (1) An atom of very light weight, so that it can move about like an electron.
    (2) An electron carrying a positive charge, often called a positron.
    (3) An atom that has lost an electron and is therefore negatively charged.
    [✓ (4)] A positively or negatively charged atom.

14. You will advance fastest toward an interesting and secure future if you
    (1) skip the What Have You Learned questions in order to save time.
    (2) wait until your last examination is returned before starting the next lesson.
    (3) study long hours every day.
    [✓ (4)] study regularly, one or two hours a day, five or six days a week.

15. To move along fast in your training, you must make your study hour fully productive. Something that will help a lot is to
    [✓ (1)] keep current lessons, stamps, pencils, scratch paper, envelopes, Request for Assistance sheets, and other training needs together in a big envelope, so that everything is instantly available when you need it.
    (2) study between 5:00 and 6:00 AM, while your mind is fresh.
    (3) read through the examination questions before the lesson; then you will only need to study such parts of the lesson as needed to answer the questions you don't already know.

16. Which of the following is the best written *Request for Assistance?* —the one that will make it possible for your instructor to help you the most.
    (1) Please explain Fig. XXX.
    (2) The battery polarity in Fig. XXX seems reversed. Why?
    [✓ (3)] Why is the battery polarity in Fig. XXX such as to put a positive voltage on the cathode? I thought a tube could not conduct with a positive voltage on the cathode.

17. To get fast answers to any technical questions you have, you should
    (1) write the questions on the back of the exam.
    (2) write your questions on any odd size sheet of paper and pin it to the exam.
    [✓ (3)] always put all technical questions on the regular Request for Assistance forms which we furnish, unless you are out of such forms, in which case regular paper of the same size can be used.

18. Questions that require a knowledge of electronics to answer are handled by your instructor. All other questions (which we call non-technical questions) go to another department. Therefore it is very important for fast service that you
    [✓ (1)] be sure to put non-technical questions on a different sheet of paper from technical questions, and make sure your name, student number and address are on each sheet.
    (2) don't send in technical and non-technical questions on the same day.
    (3) only send in non-technical queries between the 1st and 10th of each month.

19. Refer to Fig. 15. The direction of current flow, as assumed by C.I.E., is in a clockwise direction because
    (1) electrons leave the positive terminal of the battery and flow towards plate *A*.
    (2) the negative chlorine ions travel to plate *B* and the positive sodium ions travel to plate *A*. The sodium ions remove electrons from plate *A* and at the same time the chlorine ions deposit electrons on plate *B*.
    (3) electrons flow in a counterclockwise direction and current direction, as assumed by C.I.E., is opposite to electron flow.
    [✓ (4)] electrons flow from the negative battery terminal to plate *B* where the sodium ions remove the electrons. At the same time, the chlorine ions deposit electrons on plate *A* where the positive potential of the battery attracts the electrons to the positive battery terminal.

So that we can be of the most help to you . . .

Be sure to use one of the *Request for Assistance* forms with which you have been furnished for any questions you have, or for any comments you may wish to make. If you are out of these forms, you may use ordinary paper of *approximately the same size*. Be sure that your name, student number, and address are on every sheet of paper used. Never write questions or comments on the examination paper or on scraps of paper. Doing so, will, at the best, delay our service to you. At the worse, scraps of paper get lost, so that your questions will not be answered.

Questions Sometimes Asked

How can I have my Examinations or Request for Assistance Sheets returned by air mail?

By attaching an air mail stamp to your Examination or Request for Assistance papers with a paper clip. No other instructions are necessary. We pay the postage on papers returned by first class mail, and on air mail for students with APO or FPO addresses.

How are my grades stacking up with those of other students?

To maintain high standards of instruction and a demand for Cleveland Institute graduates, you will find that many examination questions require careful thought and reasoning as well as a thorough understanding of the lesson to answer correctly. For this reason, average grades at Cleveland Institute are not high. If you are averaging 85 percent or better, you are doing fairly well. You are required to restudy all lessons in which you do not earn a grade of 75 per cent.

How fast am I expected to submit examinations?

For satisfactory progress you should submit at least three examinations a month. With regular daily study amounting to 7 or 10 hours a week, you can easily complete three or more lessons a month. If circumstances arise which make it impossible for you to study at the expected rate, you should write to us explaining your problem. In any event, try to study some regularly, even though you can't keep up to the expected rate.

May I use a slide rule in working problems in this course?

Yes, if you want to. However its use in not required.

May I request help or advice on matters pertaining to my practical work, or on other problems not directly connected with my lesson?

Yes. Your instructor wants to help you in any way he can. Be sure to give complete details. Your instructor can help you most when he knows *all* the facts. We must turn down requests for help that would involve an excessive amount of the instructor's time.

Notes

"Being uninformed is not so much a shame
as being unwilling to learn."


CLEVELAND INSTITUTE OF ELECTRONICS

CLEVELAND INSTITUTE OF ELECTRONICS / CLEVELAND, OHIO

electronics

CLEVELAND INSTITUTE OF ELECTRONICS / CLEVELAND, OHIO

Electrons in Action
Part II

2312-5

An AUTO-PROGRAMMED™ Lesson

ABOUT THE AUTHOR

This text on Electrons in Action was written by John M. Doyle. In writing this lesson, Mr. Doyle's constant aim was to ensure that the material presented was accurate, useful, and interesting.

Mr. Doyle has been engaged in writing electronics material for home-study schools for several years. He is a senior member of the Society of Technical Writers and Publishers as well as a member of the IEEE.

He is the author of *Pulse Fundamentals,* a technical institute level textbook. Mr. Doyle is a consultant on technical writing for several organizations.

This is an AUTO-PROGRAMMED* Lesson exclusive with the Cleveland Institute of Electronics. It is your assurance of the finest in technical education and training.

*Trademark

Accredited by the Accrediting Commission
of the National Home Study Council

The Accrediting Commission has been approved by the U.S. Office of Education as a "nationally recognized accrediting agency".

CLEVELAND INSTITUTE OF ELECTRONICS

Electrons in Action
Part II

By JOHN M. DOYLE
Technical Staff
Cleveland Institute of Electronics

2312-5

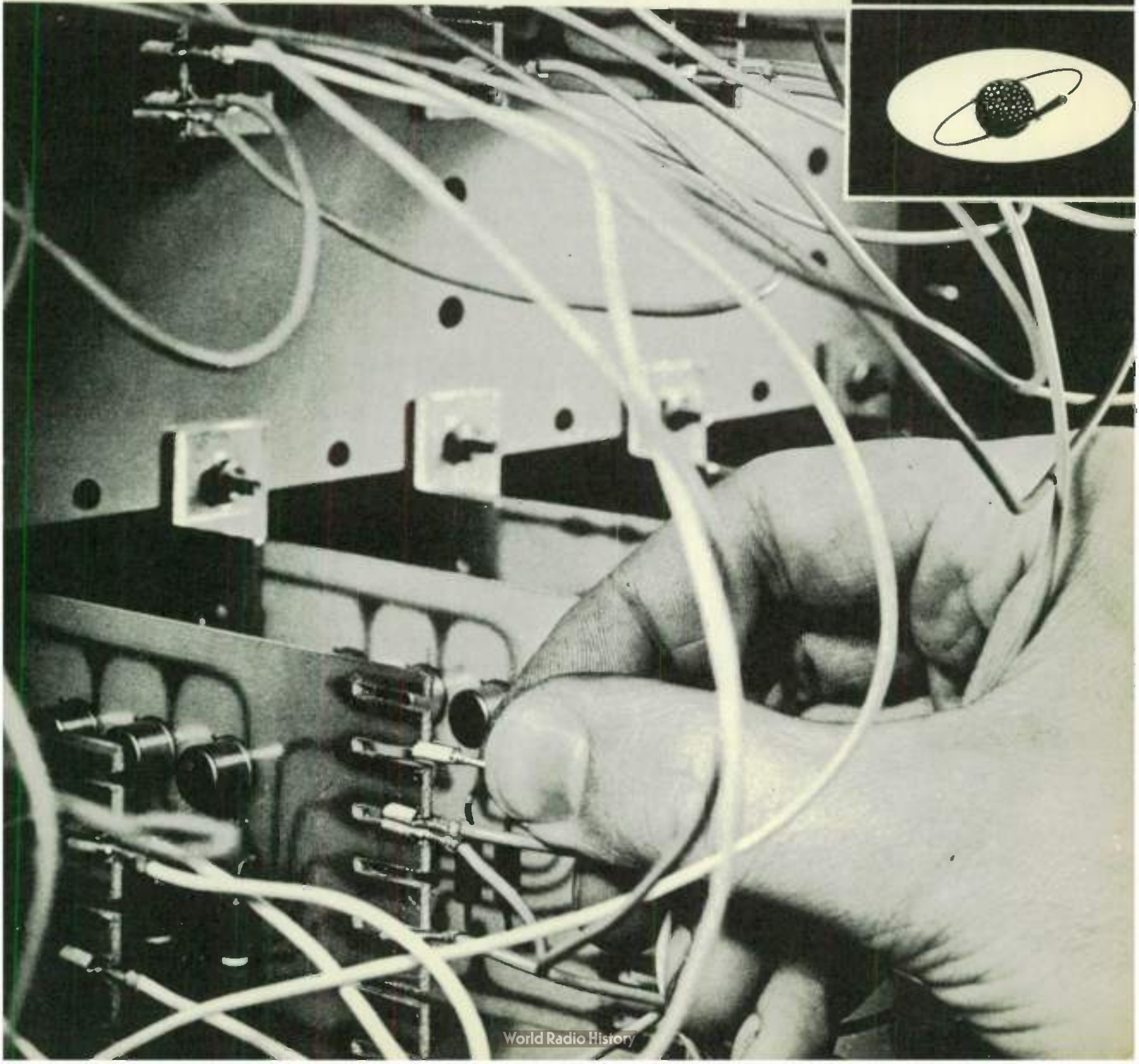

In this lesson you will learn...

Frontispiece: *The action of electrons is necessary for this transistorized digital logic circuit, and all other electronic devices to operate.* Courtesy, Tech Serv. Inc.

SECOND EDITION/Seventh Revised Printing/July, 1967.

A chat with your instructor

You have learned that an electric current is formed by the movement of electric charges. The moving charges are usually free electrons, but not always. The force moving the charges is usually the repulsion between like charges and the attraction between unlike charges. The strength of this force is, of course, one of the factors that determines the speed and number of the moving charges. The names for this force and how it is measured in volts is taken up in this lesson.

The voltage or force is one of three important features of any electric circuit. One of the other two important features is the rate at which electric charges are moving through the circuit. This is the current strength, and is measured in amperes. Electric current, then, is the motion of electricity (that is, electric charges) from one point to another. The current does the same thing in an electric circuit as a fleet of trucks does in hauling coal from mine to market. The rate that the coal moves depends upon both the number of trucks and how fast they travel.

Similarly, the rate at which electricity is moved from point A to point B (the current strength) depends upon both the number of charges (usually free electrons) moving, and how fast they travel. A current strength of two amperes might be made up of many free electrons moving slowly, or a few free electrons moving at a faster pace. Contrary to what many believe, the free electrons never move very fast along a solid conductor, never more than a fraction of an inch a minute.

The important thing to remember is that amperes is not a measure of the amount of electricity, but rather a measure of the rate at which electricity is moving. We measure the amount of electricity, say the charge within a capacitor, by a unit called the coulomb, which will also be discussed in this lesson. Measuring the amount of electricity within a capacitor in coulombs corresponds to measuring the amount of coal on hand in tons.

We have discussed force and current strength as the two important features of every circuit. The third feature is resistance, measured in ohms. Resistance is electrical friction that makes it hard for current to flow. We can adjust the current in a circuit to the value we want by adding a resistor of the right value. You will learn how to tell resistor values by the color bands printed on them.

In this lesson you will also learn the proper way to connect battery cells. Cells can be connected in parallel or in series, or in a combination of the two methods. After you learn how to choose the right method, you will be one jump ahead of many technicians.

The proper way to study this lesson is the same as for the last. Read each topic in order; then read the topic over again if it was not too clear in the first reading. Then answer the What Have You Learned? questions at the end of the topic. After you answer each question, check immediately with our answer. Never skip any of these questions.

After you are satisfied that you understand the lesson, work out the examination for this lesson and mail immediately to the Institute, but not before rechecking all your answers.

If you have any questions use one of the Request for Assistance forms. You will not run out of these forms because I will send you an additional one with my answer to your questions.

Electrons in Action
Part II

CIRCUIT PROPERTIES

Before we can intelligently discuss the action of electrical circuits, we must define certain properties common to all such circuits. We must also give these properties of the circuit specific names and express them in specific units. The properties we shall discuss are potential, quantity of electricity, current, and resistance.

9 POTENTIAL . . . We have seen how a current flows from *A* to *B* in Fig. 9(c) because of the repulsive and attractive action exerted on the free electrons by the negative and positive charges of the two bodies. This force that pushes and pulls on the free electrons and thereby causes a current flow is called the *potential,* the *difference of potential,* the *electromotive force,* or the *voltage.* For practical purposes you can consider these four terms as having the same meaning—they all refer to the force that causes an electric current to flow.

Naturally, the greater this potential or force, the stronger the current. By increasing the charge on the bodies in Fig. 9(c), (that is, the number of excess electrons on *A* and the number of deficient electrons on *B*), the potential is increased, since there will then be more push and pull on the free electrons. The result will be electrons flowing at a faster rate (a stronger current) through the connecting wire.

The symbol used to indicate potential is the letter *E*, which stands for *electromotive force*. The amount of potential is measured in a unit called the *volt*. A potential of 100 volts exerts twice as much force to push current through a circuit as does a potential of 50 volts. Consequently, the current will have twice the strength when twice the voltage is used.

WHAT HAVE YOU LEARNED?

1. The symbol for potential is the letter (a) E, which stands for (b) ELECTROMOTIVE FORCE. Potential is measured in (c) VOLTS. Other things being equal, the (d) HIGHER the circuit potential, the greater the circuit current.

2. Potential is due to the force between electric CHARGES.

ANSWERS

1. (a) *E*; (b) electromotive force; (c) volts; (d) higher 2. Charges

10 QUANTITY OF ELECTRICITY . . . The quantity of electricity at a point, say on body *A* in Fig. 9(c), is the amount of charge at that point. Since the charge on body *A* consists of excess electrons, one way to measure the amount of charge, or the quantity of electricity, is to count the number of excess electrons. Quantity of electricity is measured in a unit called the *coulomb*. If there are 6,240,000,000 billion excess electrons, the charge or quantity of electricity is one coulomb (coo-loam). If there were twice that many electrons, the charge would be two coulombs, etc.

The charge on body *B* in Fig. 9(c) is due to a shortage of electrons. You measure the quantity of electricity in the same way: one coulomb for each 6,240,000,000* billion electrons short. Quantity of electricity is indicated by the symbol *Q*.

WHAT HAVE YOU LEARNED?

1. A capacitor is a device for storing electricity. The amount of electricity stored is measured in (a) COULOMBS. The electricity stored

---

*You may find 6,280,000,000 in some books. Recent measurements show 6,240,000,000 to be more accurate.

in a charged capacitor consists of an (b) [✓ *excess*] *(deficiency)* of electrons on the negative plate and a(n) (c) deficiency of electrons on the positive plate. Because of this there is a (d) potential between the two plates that is measured in (e) volts. The greater the quantity of electricity stored, the (f) greater the potential between the two plates.

2. The glass covering the scale of your vacuum-tube voltmeter gets dirty. You pick up a rag and vigorously rub the glass to make it clean. The meter pointer swings erratically over the scale. Why?

ANSWERS

1. (a) Coulombs; (b) excess; (c) deficiency;
   (d) potential, or electromotive force; (e) volts; (f) greater
2. The rubbing action places a charge (a quantity of electricity) on the glass. The charge exerts a force on the delicate needle and causes it to move erratically.

11 CURRENT STRENGTH . . . A current flow, you remember, is the movement of electricity from one point to another. The rate at which the electricity is being moved is called the *current strength,* and it is measured in *amperes.* If in Fig. 9(c) the negative charge on *A* moves rapidly over to *B,* the current strength through the wire between the two bodies is high. If it takes considerable time for the charge on *A* to move over to *B,* the current strength through the wire is low.

The current strength is one ampere when the charge is moving from *A* to *B* at the rate of one coulomb per second; that is, when electrons are leaving *A* and arriving at *B* at the rate of 6,240,000,000 billion electrons each second.

The current in a circuit is indicated by the letter *I,* which stands for *intensity* of current.

WHAT HAVE YOU LEARNED?

1. Figure 14 shows a wire connecting a resistor *R* between the charged plates of a capacitor. Because of the potential of the opposing charges, a 2-amp current flows through the connecting wire. As a result, the quantity of electricity stored in the capacitor (a) *(increases)* [✓ *(decreases)*]. The amount of electricity stored changes at the rate of (b) 2 coulombs each second. If the original charge on the capacitor was 20

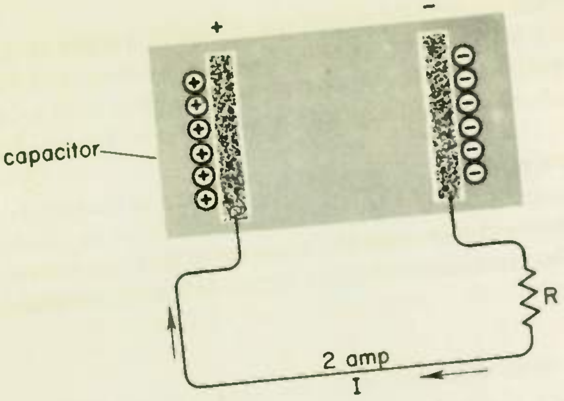

Fig. 14

coulombs, the charge after the current has been flowing for 3 sec (seconds) would be (c) 14______ coulombs, assuming the current stays at a steady 2 amp.

2. Referring again to Fig. 14, if the current strength when the wire is first connected is 2 amp, will it actually be this much 1 sec later? NO______ Why?

3. A current of 6 amp flows through an electric toaster for 30 sec. The quantity of electricity used by the toaster during that time is 180______ coulombs.

ANSWERS

1. (a) Decreases; (b) 2 . . . When electricity moves at the rate of 1 coulomb per sec, the current is 1 amp. Therefore, a 2-amp current moves charge at the rate of 2 coulombs per sec. (c) 14 coulombs . . . From (b) the charge is being reduced at the rate of 2 coulombs per sec, or 6 coulombs in 3 sec. 20 coulombs − 6 coulombs = 14 coulombs
2. No . . . As the amount of charge goes down, the potential between the plates goes down, so that there is no longer so much force pushing electrons through the wire.
3. 180 . . . One ampere flowing for one second is one coulomb. Therefore, 6 amp flowing for 30 sec is 6 × 30 = 180 coulombs.

12 RESISTANCE . . . Even the best conductor offers some opposition to the passage of free electrons and other charged particles through it. This opposition to current flow is called *resistance*. Resistance can be looked at as electrical friction. Resistance opposes the flow of current just as mechanical friction opposes the pulling of a heavy box across a floor. In a good conductor, such as copper, the resistance is low, so

that current flows with little opposition. This is similar to a box being pulled over slick ice. In a poorer conductor, like iron, the current has more trouble getting through, so the resistance is said to be higher. This corresponds to pulling a heavy box over a rough surface.

It is well known that friction causes heat. Electrical friction is no exception. When current flows through a resistance, heat is produced. The higher the resistance the greater the amount of heat produced. Increasing the voltage so that more current flows will also increase the heat produced.

Resistance is a desirable property in such circuit components as toasters and electric stove elements, which are intended to produce heat. In circuit elements such as conductors connecting a lamp to a battery, resistance is an undesirable property. If the heat is developed at a greater rate than the conductors can pass it on to the surrounding air, the temperature of the conductors may rise so much that the conductors become a fire hazard.

The unit used to express resistance is the *ohm,* and resistance is indicated by the letter symbol *R*. Very often, a special symbol, the Greek letter capital omega, is used in place of the word ohm or ohms, and it looks like this: Ω. Now let us give a formal definition of the ohm.

An electric circuit has a resistance of one ohm when an applied emf (electromotive force) of one volt causes a current to flow through the circuit at the rate of one ampere.

Resistance is often intentionally added to an electric circuit to limit current. The extra resistance needed to limit current to a specific value is usually lumped into a single electric component, called a *resistor,* that is designed to dissipate (get rid of) heat rapidly without damage to itself or nearby objects.

WHAT HAVE YOU LEARNED?

1. An abbreviation you will often see and hear is emf. This stands for (a) ELECTROMOTIVE FORCE. Two other names for the same thing are (b) POTENTIAL and VOLTAGE.

2. An emf is a (a) FORCE that tends to make current flow in a circuit. However, this flow of current is limited by opposition encountered in the circuit, called (b) RESISTANCE.

3. Whenever current flows through resistance, HEAT is produced.

4. The unit used to express resistance is the (a) OHM, and resistance is indicated by the letter symbol (b) R. A symbol often used in place of the word "ohm" is (c) Ω.

5. An electric circuit has a resistance of one ohm when one volt causes a (a) CURRENT to flow at the rate of (b) ONE AMPERE.

6. The heat emitted by an electric light bulb is caused by current passing through the filament. Therefore, the filament must possess (a) RESISTANCE. In a similar manner, the heat emitted from any piece of electronic equipment when operating must also be due to the passage of (b) CURRENT through the (c) RESISTANCE of the various circuits.

7. In servicing a mobile transceiver, you find a badly scorched resistor. This indicates that excessive (a) CURRENT has passed through the resistor and produced more (b) HEAT than the resistor is able to dissipate.

ANSWERS

1. (a) Electromotive force; (b) potential and voltage
2. (a) Force; (b) resistance 3. Heat
4. (a) Ohm; (b) *R*; (c) Ω 5. (a) Current; (b) one ampere
6. (a) Resistance; (b) current; (c) resistance 7. (a) Current; (b) heat

13 **RELATIONSHIP BETWEEN VOLTAGE, CURRENT, AND RESISTANCE** . . . Having determined the nature of voltage, current, and resistance, let's see how the three are interrelated.

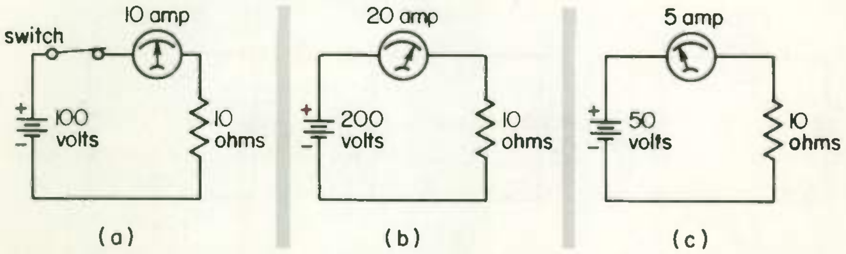

(a) (b) (c)

Fig. 15 **Illustrating the effect of increasing or decreasing applied voltage when the circuit resistance remains unchanged.**

First, suppose we connect a 100-volt battery, resistor, switch, and ammeter as shown in Fig. 15(a). Before the switch is closed, the ammeter reads zero, since there can be no current through the circuit until a voltage—from the battery in this case—is applied.

When the switch is closed, the pointer on the ammeter will move across the scale from left to right, indicating a flow of current through the circuit. For the sake of illustration, let's say the ammeter pointer moves exactly halfway up scale and that the indicated current at this point is 10 amp, as shown in Fig. 15(a).

Now, if we replace this battery with one supplying twice the voltage, as in Fig. 15(b), the ammeter will move all the way across the scale, indicating that the current is now 20 amp. You now see that when we doubled the applied voltage, we doubled the circuit current. This relationship holds true only when the circuit resistance remains unchanged.

If we replace the original battery with one supplying half the voltage, as in Fig. 15(c), the ammeter pointer will move one-quarter the length of the scale, indicating 5 amp.

In summary, as long as the circuit resistance remains unchanged, any change in voltage will produce a similar change in current. If the voltage is doubled, current is doubled; if the voltage is halved, the current is halved, and so on.

Now let's see what happens when we keep the same applied voltage but change the resistance of the circuit (see Fig. 16). In (a) of this figure, with 10 ohms resistance, we get a half-scale reading of 10 amp on the ammeter. In (b) we replace this resistor with a second one having twice the resistance of the first. The ammeter pointer drops

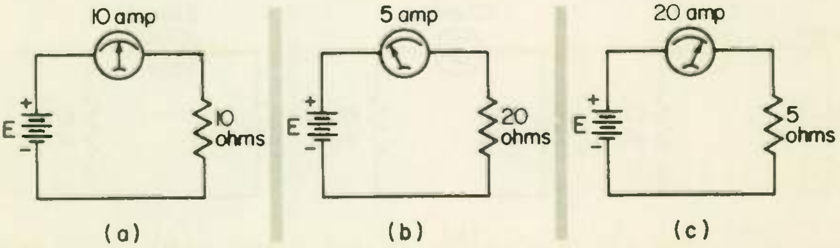

Fig. 16 **Doubling the resistance halves the current, provided the voltage does not change.**

to one-quarter of full scale, or 5 amp. Doubling the circuit resistance has therefore reduced the circuit current by one-half. If we now cut the original circuit resistance by one-half, as in (c), circuit current will double, and so on. Summing up, as long as the applied voltage is unchanged, any change in resistance will produce an opposite change in current. If the resistance is doubled, circuit current will be halved; if the resistance is halved, the circuit current will double; and so on.

WHAT HAVE YOU LEARNED?

1. In the circuit shown in Fig. 17 the ammeter reads 8 amp. A new battery, having 3 times the voltage of the original one is connected into the circuit. The new value of current, as indicated by the ammeter, will be (a) 24 amperes. This shows that when you triple the voltage, you (b) TRIPLE the current, provided the circuit (c) RESISTANCE remains the same.

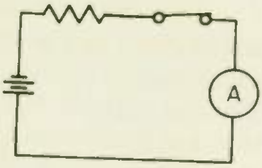

Fig. 17

2. In the same circuit as in Problem 1 but with a certain resistor connected in the circuit, we obtain a current reading of 6 amp. If a resistor having 3 times the value of the first one is substituted into the circuit, current will be (a) 2 amperes. This shows that as we triple the resistance, the current changes to (b) ONE THIRd its original value provided the applied voltage is (c) CONSTANT.

ANSWERS

1. (a) 24; (b) triple; (c) resistance
2. (a) 2 amp; (b) one-third; (c) constant

OHM'S LAW

Current, voltage, and resistance are related in such a way that, if any two are known, the third can be easily calculated. The formulas for doing this, known as *Ohm's law*, are as follows:

To find the voltage . . . Voltage E is equal to current I multiplied by resistance R, or in formula form,

$$E = I \times R$$

To find the current . . . Current is equal to voltage divided by resistance, or in formula form,

$$I = \frac{E}{R}$$

To find the resistance . . . Resistance is equal to voltage divided by current, or in formula form,

$$R = \frac{E}{I}$$

The use of these rules will now be explained.

14 OHM'S LAW FOR VOLTAGE . . . In Fig. 18 the ammeter indicates that the battery is forcing 5 amp of current through the opposition of the 8-ohm resistor. For the current to be 5 amp, the voltage E must be a certain definite value. If the voltage is lower than required, it will not have enough force to push 5 amp through the resistor, so that the current will be less than 5 amp. If the voltage is too high, the current will be more than 5 amp.

To find the value E must have, multiply the current by the resistance:

$$E = I \times R = 5 \text{ amp} \times 8 \text{ ohm} = 40 \text{ volts}$$

Hence, the voltage of the battery E in Fig. 18 is 40 volts. We shall next consider a more practical problem.

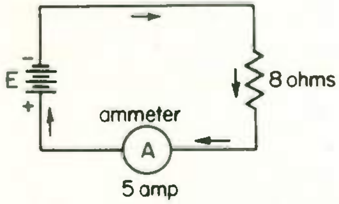

Fig. 18 **The battery forces current through the resistor against the opposition of the resistor.**

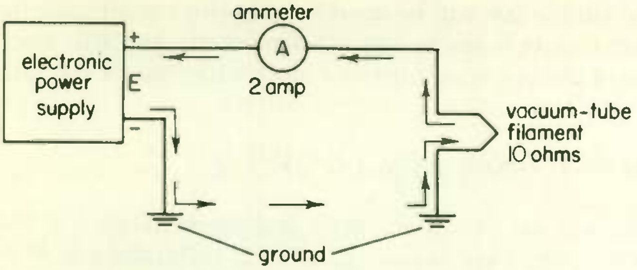

Fig. 19 A d-c circuit using an electronic power supply.

In the problem illustrated in Fig. 19, instead of using a resistor for the circuit load as we did in the preceding example, we shall use the filament of a vacuum tube. All that you have to do to prove to yourself that the filament has resistance is to note its color when voltage is applied. As current passes through it, the filament becomes red, indicating the presence of heat. Heat, you will recall, is due to the presence of resistance.

Also, instead of using a battery as the source of emf, we are going to use the d-c output voltage of an electronic power supply. The negative terminal of the power supply is connected to ground, as is the lower end of the vacuum-tube filament. Ground is usually the metal chassis on which the components making up an electronic circuit are mounted. As far as the current is concerned, the chassis acts in the same way that any other metallic conductor of negligible resistance would act. Thus, as shown, current still flows from negative to positive. We also have an ammeter connected between the upper end of the filament and the positive terminal of the power supply to measure current.

From manufacturer's literature we learn that the filament has a resistance of 10 ohms when heated and that a current of 2 amp should flow through it if it is to heat to the correct temperature. What voltage power supply should we use in order to have the correct current through the filament? As before, we merely multiply the resistance by the current:

$$E = I \times R = 2 \text{ amp} \times 10 \text{ ohm} = 20 \text{ volts}$$

Hence, the electronic power supply chosen should have an output of 20 volts.

The three forms of Ohm's law can be used for any d-c circuit, and for all a-c circuits found in this lesson. In a later lesson you will learn that a modification of the law is required for use with some a-c circuits.

WHAT HAVE YOU LEARNED?

1. If the current in a given circuit is 5 amp and the resistance is 200 ohms, the voltage by Ohm's law is (a) 160 V volts, since (b) $E =$ I x R.

2. This form of Ohm's law holds true in any [✓ (d-c)] (a-c) (d-c or a-c) circuit.

3. In transmitter circuits, suitable d-c operating voltage (called the grid bias voltage) between grid and cathode is often obtained from a resistor, *R* in Fig. 20, connected between grid and cathode. If *R* is 50,000 ohms and a 0.001-amp direct current flows through it as shown, then the d-c bias voltage between grid and cathode, as read by the voltmeter, is (a) 50 volts. The current direction is indicated by the arrow in the drawing. Remembering that current flows from (b) NEGATIVE to POSITIVE, the voltage developed by the tube that causes the current to flow is positive at the (c) ~~(top)~~ [✓ (bottom)] of the resistor and negative at the (d) [✓ (top)] ~~(bottom)~~.

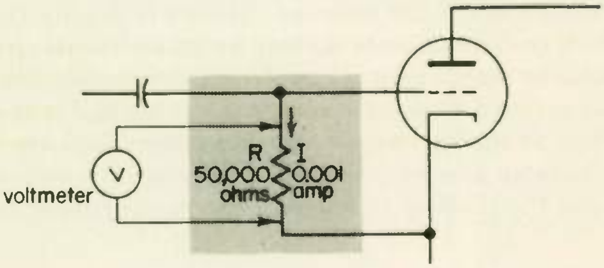

Fig. 20

4. A d-c relay coil requires a current of 2 amp to close the contacts. You measure the resistance of the coil with an ohmmeter and find it to be 12 ohms. What voltage must you use to operate this relay? 24 VOLTS.

ANSWERS

1. (a) 1,000; (b) $I \times R$, or IR 2. D-c
3. (a) 50 . . . $E = 0.001$ amp $\times$ 50,000 ohms $=$ 50 volts
   (b) negative to positive; (c) bottom; (d) top
4. 24 volts

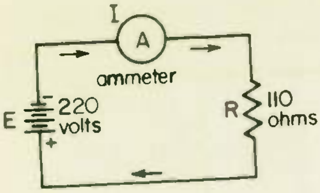

Fig. 21 Divide voltage by resistance to get current.

15 OHM'S LAW FOR CURRENT . . . The amount of current in a circuit depends on two factors: the voltage and the resistance. Increasing the applied voltage makes more free electrons move around the circuit and therefore increases current. Increasing the resistance produces greater opposition to current and therefore decreases current.

Ohm's law tells us that the amount of current, in amperes, is equal to the applied voltage, in volts, divided by the circuit resistance, in ohms. In Fig. 21 the current read by the ammeter is

$$I = \frac{E}{R} = \frac{220 \text{ volts}}{110 \text{ ohms}} = 220 \div 110 = 2 \text{ amp}$$

Hence the ammeter reads 2 amp.

We know that $E = IR$, and to prove our work is accurate, we make the substitution $E = 2 \times 110 = 220$ volts. Regardless of what values may be given for E and R in d-c circuits, the value of I may always be determined by using the form of Ohm's law described above.

WHAT HAVE YOU LEARNED?

1. Using Ohm's law, how much current will an electric toaster draw with a resistance of 25 ohms when connected to a 100-volt line? 4 amperes.

2. Will a 10-amp fuse be suitable for protecting an electrical appliance with a resistance of 10 ohms when used on a 120-volt line? *(yes)* [✓ *no*].

3. In Fig. 22 the same applied voltage appears across each of the four resistors, that is, 100 volts. Using Ohm's law, the current in amperes, through branch A is (a) 10 AMPS, the current through branch B is

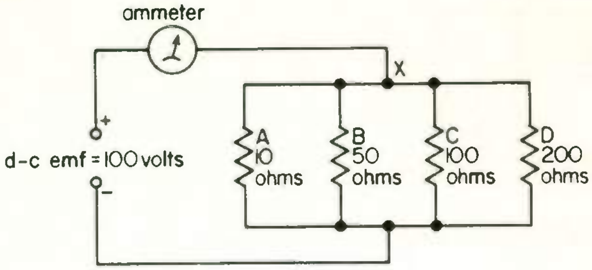

Fig. 22

(b) 2 AMPS, the current through branch C is (c) 1 amp, and the current through branch D is (d) ½ AMP. Now, at point X, these four currents combine and flow back to the source of emf; therefore, the total current as read by the ammeter is (e) 13 ½ AMPS.

4. Suppose that in the circuit shown in Fig. 22 the ammeter reading drops from 13.5 amp to 11.5 amp. Where would you look for trouble, and what would you expect to find? Resistor B open.

ANSWERS

1. 4 amp . . . $I = \frac{E}{R} = \frac{100}{25} = 4$ amp
2. No . . . By Ohm's law the appliance will draw 120 ÷ 10 = 12 amp. Since this is more current than the fuse can carry, the fuse would blow. A 15-amp fuse should be used.
3. (a) 10 amp; (b) 2 amp; (c) 1 amp; (d) 0.5 amp;
   (e) 13.5 amp . . . 10 + 2 + 1 + 0.5 = 13.5 amp
4. Look in branch B carrying 2 amp, since this is the amount by which the ammeter reading drops. You will find an open circuit which means that no current can flow through that branch.

16 OHM'S LAW FOR RESISTANCE . . . As the third and final version of Ohm's law, the three factors, E, I, and R are related by the formula

$$R = \frac{E}{I}$$

This tells us that resistance is the quotient (answer in division) obtained when we divide the given value of E, in volts, by the given value of I, in amperes.

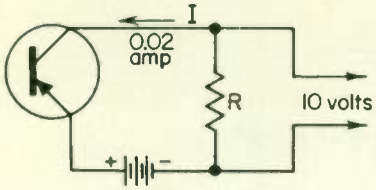

Fig. 23 Basic collector circuit of a transistor.

EXAMPLE . . . In Fig. 23 suitable operation of the transistor requires that the voltage across R be 10 volts. The current through R is 0.02 amp. What value of resistance should you use for R?

SOLUTION . . .

$$R = \frac{E}{I} = \frac{10}{0.02} = 500 \text{ ohms, } \textit{ans.}$$

The three forms of Ohm's law are used so often in electronics that you will very soon memorize them. In the meantime, however, the chart shown in Fig. 24 will serve you as a memory aid. Just place your finger over the desired quantity and the correct arrangement of the other two quantities in the equation is indicated. For example, if you are looking for E, place your finger over E, and you find $I \times R$. If you want I, cover this symbol with your finger and you get $\frac{E}{R}$. Finally, if you want R, cover it with your finger and you get $\frac{E}{I}$.

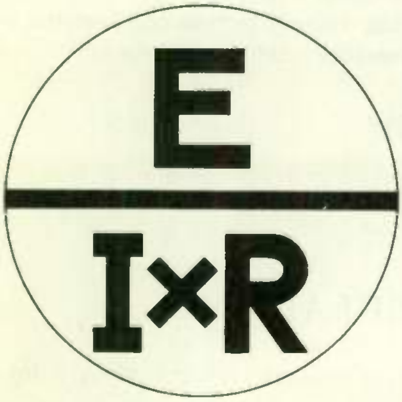

Fig. 24 An aid to remembering Ohm's law.

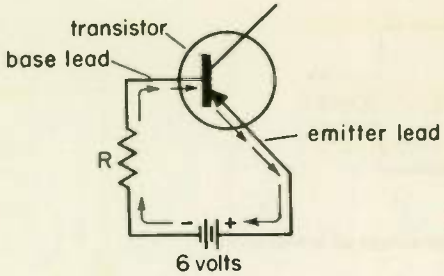

Fig. 25

WHAT HAVE YOU LEARNED?

1. If the voltage applied to a circuit is 300 volts and the current through the circuit is 3 amp, the resistance of the circuit, by Ohm's law, is 100 ohms.

2. You often must use Ohm's law to find the correct value for a resistor to use in a tube or a transistor circuit. For example, a transistor won't work right unless the correct value of d-c current (called the bias current) flows through the transistor between base and emitter, as shown in Fig. 25. Suppose that for proper operation of the transistor in Fig. 25, the bias current should be 0.003 ampere. What resistance value should be used for R in order to hold the current to the right value? You can assume that the resistance inside the transistor is negligible. 2 k Ω

3. In servicing an inoperative transmitter you find a resistor whose value you suspect is not correct. An ammeter connected in series with the resistor indicates a current of 3 amp through the resistor. By using a voltmeter, you determine that the voltage across the resistor is 150 volts. What is the value of the resistor? 50 ohms.

ANSWERS

1. 100 2. 2000 ohms . . . $R = \frac{E}{I} = \frac{6 \text{ volts}}{0.003 \text{ amp}} = 2000$ ohms

3. 50 ohms . . . $R = \frac{E}{I} = \frac{150 \text{ volts}}{3 \text{ amp}} = 50$ ohms

CONDUCTORS AND INSULATORS

17 RESISTOR COLOR CODE . . . Carbon resistors are coded by color bands to indicate resistance values in ohms. The numerical values assigned to the different colors are given in Table 1. Figure 26 shows

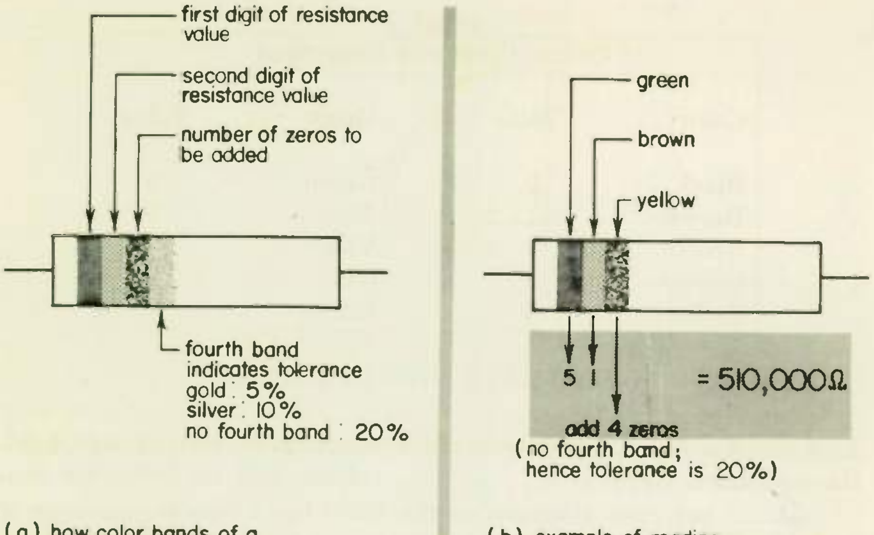

(a) how color bands of a resistor are read

(b) example of reading resistor color bands

Fig. 26 Resistor color bands.

how the bands are read and also gives an example. Note the use of a fourth band to indicate tolerance when the tolerance is other than 20 per cent. To read a resistor, always turn it so that the ends with the color bands are to your left, as in Fig. 26. Then read the bands from left to right.

Sometimes you may encounter a resistor on which the *third* color band is gold or silver. This indicates that its resistance value is under 10 ohms. If the third band is gold, the resistance is between 1 and 10 ohms; and if silver, between 0.1 and 1 ohm. For example, if the four color bands red, blue, gold, and silver are shown, the resistance is 2.6* ohms with a tolerance of 10 per cent. If the three color bands red, blue, and silver are shown, the resistance is 0.26* ohm. Since the fourth band is missing, the tolerance is 20 per cent. The only time a gold or silver band is used for tolerance is when it is in the *fourth band.* A gold or silver *third* band has nothing to do with tolerance. Instead, it indicates where the decimal point is to be placed on the resistance value.

Tolerance refers to the amount that the actual resistance may deviate from the marked value. Thus a resistor marked 200 ohms with a tolerance of 10 per cent may vary as much as 10 per cent of 200 ohms, or 20 ohms, from the marked value. Hence, its actual resistance may be anywhere between 180 and 220 ohms.

*Since the first two color bands are red and blue, the digits are 2 and 6.

TABLE 1

COLOR CODE FOR RESISTORS

Color	Value	Color	Value
Black	0	Green	5
Brown	1	Blue	6
Red	2	Violet	7
Orange	3	Gray	8
Yellow	4	White	9

WHAT HAVE YOU LEARNED?

1. A resistor has the following color bands: gray, red, orange, gold. Its resistance value is (a) 82 K ohms, and its tolerance is (b) ± 5 per cent. (Remember the third band tells the number of zeros! Look at Fig. 26(b) again.)

2. The color bands on a resistor read brown, black, brown, and there is no fourth band. The resistance value of the resistor is (a) 100 ohms and its tolerance is (b) ±20 per cent.

3. A resistor has the color bands gray, red, gold. Its resistance is (a) 8,2 ohms with a tolerance of (b) ±20 per cent.

4. The color bands for an 820,000-ohm ± 10 per cent carbon resistor are (a) GREY, (b) REd, (c) YEllow, and (d SIlVER.

5. The color bands for a 27-ohm ± 5 per cent carbon resistor are (a) REd, (b) ViolET, (c) BlACK, and (d) Gold.

ANSWERS

1. (a) 82,000; (b) ±5 2. (a)100; (b) ±20 3. (a) 8.2 ohms; (b) ±20

4. (a) Gray; (b) red; (c) yellow; (d) silver

5. (a) Red; (b) violet; (c) black; (d) gold

18 FACTORS AFFECTING THE RESISTANCE OF A CONDUCTOR

... Temperature affects the resistance of an electrical conductor. For example, as the temperature of copper increases, the resistance of copper also increases, and the other way around. For this reason, copper is said to have a *positive temperature coefficient.* Most other metals also have a positive temperature coefficient. Carbon is an example of a

---

*The symbol ± means "plus or minus." That is, the actual resistance value is not more than 10% over the rated value, nor is it more than 10% under the stated value.

substance with a negative temperature coefficient; that is, an increase in the temperature of carbon decreases its resistance. Certain alloys, the resistance of which varies only slightly with changing temperature have been developed. Such materials are said to have zero temperature coefficient and are used where a constant resistance is important, such as in oscillator circuits where a high-frequency stability is needed.

Length also affects the resistance of an electrical conductor. If we cut two lengths of wire from the same reel, one of them twice the length of the other, the electrons will have twice as much trouble making the trip through the longer wire. Therefore the resistance of the longer wire to the flow of current is twice as great as that of the shorter wire. This indicates that the resistance of an electrical conductor is proportional to its length; that is, if the length is tripled, resistance is tripled; and if the length is halved, the resistance is also halved; and so on.

Another factor that governs the resistance of a metallic conductor is its cross-sectional area (area seen when looking at the end of the conductor). The larger the wire, the easier it is for the electrons to move along it, and thus the lower the resistance. Doubling the cross-sectional area cuts the resistance in half.* Halving the cross-sectional area doubles the resistance.

As another example, if the cross-sectional area is quadrupled, the resistance is reduced to one-fourth its original value. Conversely, if the cross-sectional area is reduced to one-fourth its original size, resistance is increased four times.

Finally, the type of conductor material also governs the resistance of a conductor. Some materials have more free electrons per unit volume than others. The greater the number of free electrons per unit volume, the better conductor that material becomes. A silver wire has a lower resistance than a copper wire with the same dimensions, and the copper wire has a lower resistance than an aluminum wire with the same dimensions. In summary, the resistance of an electrical conductor is dependent on the type of conductor material.

Silver is the best conductor, but its high cost limits its use to special applications where a low resistance is more important than cost. The conductivity of copper is nearly as good as that of silver. Because it is low in cost, solders well, and can be bent to shape easily, it is by far the most widely used of all conductors. Gold is the next best conductor.

*However, doubling the diameter cuts the resistance to one-fourth its previous value. This is because doubling the diameter will increase the cross-sectional area by four times. The cross-sectional area is the area you see when you look at the end of the wire.

Aluminum is the fourth best conductor, and has the advantage of light weight. Unfortunately, it is difficult to solder, which limits its usefulness as a general conductor. It is used in electronics mostly for shield-against stray fields and for panels and chassis. Its light weight is a great advantage in these uses.

All metals are conductors. However, since the next best conductors after aluminum have resistance at least three times as great as copper, only the metals previously mentioned can be considered as first-class conductors. An important non-metal conductor is carbon, used where a soft material is needed, as in motor brushes. Its resistance is higher than that of most metals.

Silver is widely used for relay contacts because it has high conductivity and good contact properties. It does not pit easily; atmospheric gases have little effect on it; and its cost is lower than tungsten which is also a suitable material. Tungsten does not pit or burn away easily under the effect of the arc created when contacts open or close. It is better than silver for many contact purposes, but high cost limits its use.

Before we leave the subject of conductors and their resistance, it should be pointed out that whenever we are doing soldering in any part of an electrical circuit, rosin should be used as a soldering flux. Rosin has the very important property of being completely noncorrosive. All other fluxes are at least partially corrosive. The use of any flux other than rosin may, in time, produce high-resistance connections due to corrosion.

WHAT HAVE YOU LEARNED?

1. Four factors that affect the resistance of a conductor are (a) LENGTH, (b) TEMPERATURE, (c) CROSS SECTIONAL AREA, and the type of (d) MATERIAL.

2. Most metals have a (a) POSITIVE temperature coefficient, which means that resistance (b) INCREASES as temperature increases.

3. Carbon has a (a) NEGATIVE temperature coefficient, since its resistance (b) dECREASES as temperature increases.

4. Suppose you have a length of wire whose resistance is 1 ohm. If you use another length of the same wire that is twice as long, the re-

sistance is (a) 2 Ω __________, and if you use another length of the same wire that is only half as long, the resistance is (b) .5 Ω __________.

5. Assume you have a conductor that is 12 ft (feet) long, has a resistance of 10 ohms and has a cross-sectional area of 1 sq in. (square inch). If this area is reduced to ½ sq in., the resistance of the conductor is changed to 20 ______ ohms.

6. Copper has more free electrons than aluminum. Therefore, the resistance of copper is LESS ______ than that of aluminum.

7. Soldered connections in an electrical circuit should always be made by using ROSIN ______ as a soldering flux.

ANSWERS

1. (a) Temperature; (b) length; (c) cross-sectional area; (d) material
2. (a) Positive; (b) increases 3. (a) Negative; (b) decreases
4. (a) 2 ohms; (b) 0.5 ohm 5. 20 6. Less, or lower 7. Rosin

19 INSULATORS . . . In some materials, the electrons are held in a fixed pattern and, theoretically, there are no free electrons. A material with no free electrons is classed as a perfect insulator. Since all materials have at least a few free electrons, however, there is actually no such thing as a perfect insulator. Thus, practical insulators are those materials which have a very small number of free electrons per unit volume compared with metallic conductors.

Under the influence of ordinary voltage application, insulators have extremely high resistance to current flow. If, however, the applied voltage exceeds a critical value, called the breakdown voltage, many electrons are torn from their fixed position and become free electrons. As a result, a high-value current passes through the insulator, which is then said to be punctured.

When an alternating voltage is applied to an insulator, each reversal of applied voltage causes particle rearrangement within the insulator and the release of heat. If the applied voltage is of low frequency, such as the 60-cps (cycle per second) commercial-power frequency, this release of heat is ordinarily of little consequence. Some materials that are good insulators at commercial-power frequencies are cotton, hard rubber, paraffin, clay, shellac, fiber, Bakelite, silk, and glass. At radio frequencies these insulators are unsuitable because of energy absorption from the circuit. The energy appears as heat in the insulator. Good insulators for use at radio frequencies are quartz, polymerized styrene, steatite bodies, Pyrex, Mycalex, Isolantite, mica, and polyethylene.

Insulators are subject to many deteriorating influences and must be selected carefully for a given application. For example, an antenna-strain insulator exposed to the elements must not only be a good insulator but must also be able to withstand the pressure of the antenna it supports, be relatively unaffected by the elements, and be available at low cost. Glazed porcelain is ideally suited to this application; in fact, no other insulator has all of the desirable characteristics.

WHAT HAVE YOU LEARNED?

1. A practical insulator has a very (a) LOW number of (b) FREE electrons per unit volume compared with conductors.

2. A (a) HIGH voltage causes an insulator to be punctured and a high (b) CURRENT to pass through the insulator.

3. The application of an ALTERNATING voltage causes heat to be released by an insulator. This release is due to the rearrangement of particles that take place within the insulator.

ANSWERS

1. (a) Small; (b) free 2. (a) High; (b) current
3. Alternating, or radio-frequency

VOLTAGE

20 **METHODS OF DEVELOPING VOLTAGE** . . . Voltage sources may be grouped as follows: batteries, generators, thermocouples, photoelectric cells, piezoelectric crystals, and static methods. We shall discuss each method in turn.

Batteries . . . When two plates of unlike metals are immersed in a conducting solution containing many ions, called an *electrolyte,* one plate becomes negatively charged with respect to the other. The charges set up an emf between plates.

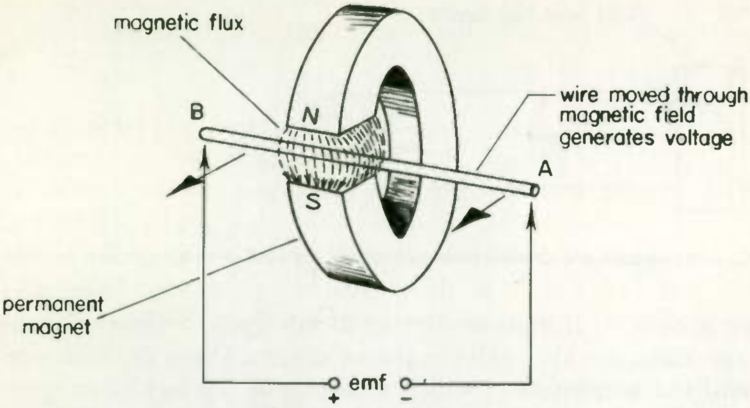

Fig. 27 Basis of inducing voltage in a generator.

If the two such immersed plates are connected externally, the emf causes a current to pass through the connecting circuit.

Generators . . . Figure 27 shows how a voltage is developed by a generator. When a conductor is moved through a magnetic field, a voltage is developed between the ends of the conductor. A generator consists of a revolving armature wound with wire that continuously moves within a magnetic field and thus develops a voltage as long as the armature continues to revolve.

Thermocouples . . . A thermocouple consists of two different metals joined together. When the junction between the metals is heated, a voltage is produced, as shown in Fig. 28. The amount of voltage depends upon the metals used and the difference in temperature between the heated junction and other parts of the thermocouple circuit.

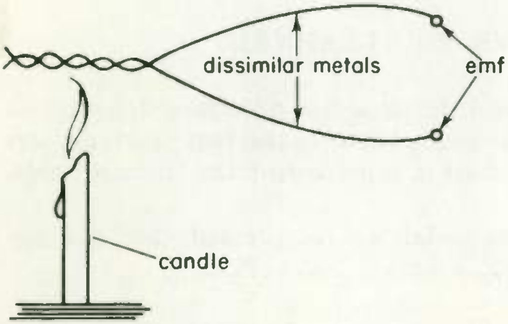

Fig. 28 A thermocouple. When the junction is heated, a voltage is developed.

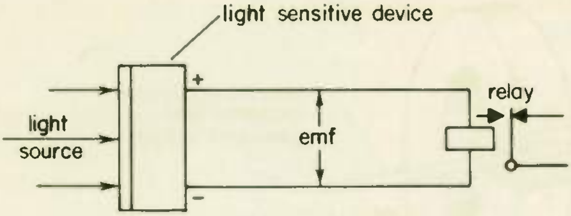

Fig. 29 **Circuit including a device that generates an emf when exposed to light.**

Photoelectric cells . . . If light is allowed to fall upon devices made of certain materials, notably selenium and silicon, these devices generate an emf the amplitude of which increases as the light increases. Figure 29 shows a typical circuit in which such a device is used to operate a sensitive relay.

Piezoelectric crystals . . . When certain crystalline materials are compressed, they produce an emf. Conversely, if they are charged electrically, they deform in width, length, or thickness or bend in their plane of freedom. This is known as the piezoelectric effect. The voltage generated increases or decreases with corresponding changes in pressure. Piezoelectric materials that are commercially available include Rochelle salt, lithium sulfate, quartz, and ceramic compositions such as barium titanate. Quartz crystals are often used in oscillators.

Static methods . . . We have seen how friction can produce a voltage, usually referred to as a static voltage. Very high voltages can be developed. Machines designed to develop static charges can produce extremely high voltages. Friction is not always required to produce static charges.

WHAT HAVE YOU LEARNED?

1. In a thermocouple, the emf developed is determined by the (a) TEMPERATURE DIFFERENCE between the two junctions and types of (b) MATERIAL used in constructing the thermocouple.

2. When certain crystalline materials are compressed, they produce an emf. This is known as the PIEZOELECTRIC effect.

3. In a transmitter master oscillator a piece of quartz is often used as (a) CRYSTALS . When quartz crystals are compressed they generate a

(b) VOLTAGE. This effect is known as the (c) PIEZOELECTRIC effect.

4. Suppose a light source is set on one side of a conveyor belt and that a selenium cell on the other side faces the light. When a package goes by on the conveyor belt, all light is cut off. After the package passes, light falls on the selenium cell and produces an (a) EMF. The emf (voltage) produced by the cell is amplified and used to actuate a counter. If the front of the cell should become covered with dirt, light would be cut off at all times. Thus, the cell could produce no (b) EMF when a package passed, and there would be no signal applied to the (c) COUNTER.

ANSWERS

1. (a) Temperature difference; (b) material
2. Piezoelectric
3. (a) Crystal; (b) voltage; (c) piezoelectric
4. (a) Emf; (b) emf; (c) counter

21 HIGH-VOLTAGE SAFETY PRECAUTIONS . . . As you progress in the field of electronics, you will continuously be exposed to electrical and electronic circuitry carrying, at times, voltages high enough to be lethal. You must always realize that dangerous voltages can potentially exist in even the simplest of electronic circuitry.

Actually, the voltage itself isn't lethal; rather, it is the current that the voltage forces through your body that can be lethal. From your knowledge of Ohm's law, you know that current increases as resistance decreases. Thus, if you are perspiring, a given voltage that normally may be harmless can force enough current through your body to be fatal. Because your skin's resistance is lower than normal, enough current to be fatal may pass through it. The same holds true when you are working in damp or wet areas such as on concrete floors. Also, remember that a given current can be unusually dangerous when it passes through a major portion of your body, as between arms or between arms and legs. For this reason, it's always a good idea to keep one hand in your pocket or behind your back when you are working with "live" circuits.

High-voltage capacitors can be very dangerous because they can retain a charge for some time, even when the equipment in which they are used is disconnected from its source of power. Therefore, always discharge all filter capacitors in a circuit with an insulated shorting bar after disconnecting the power.

22 HOW BATTERIES ARE CONNECTED . . . Battery cells may be connected either in series or in parallel to form a larger battery. Figure 30 shows how to connect cells in series and Fig. 31 how to connect them in parallel. Notice in the series connection that the negative terminal of a cell connects to the positive terminal of the next cell. Thus the negative terminal of cell 1 connects to the positive terminal of cell 2, and the negative terminal of cell 2 connects to the positive terminal of cell 3, etc. In the parallel connection, all the positive terminals are connected together and to the positive side of the load. Similarly, all the negative terminals are connected together and to the negative side of the load.

When cells are connected in series, the battery voltage is equal to the sum of the voltages of the individual cells. Thus in Fig. 30, where four 1.5-volt cells are shown connected in series, the battery voltage is 4 × 1.5 = 6 volts. Batteries are connected in series when a voltage higher than is available from a single cell is needed. Since few cell types have a voltage higher than 2 volts (ordinary dry cells are only 1.5 volts), and since higher voltages are usually needed, cells are connected in series much more often than in parallel.

When cells are connected in parallel, the total battery voltage is the

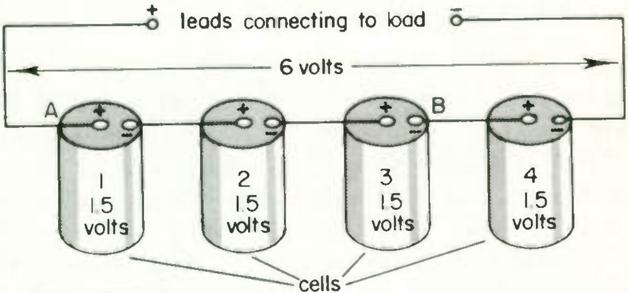

(a) pictorial diagram

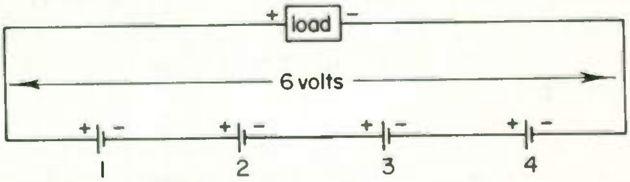

(b) schematic diagram

Fig. 30 Cells connected in series.

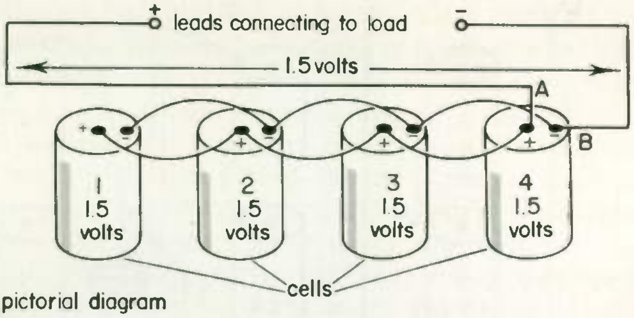

(a) pictorial diagram

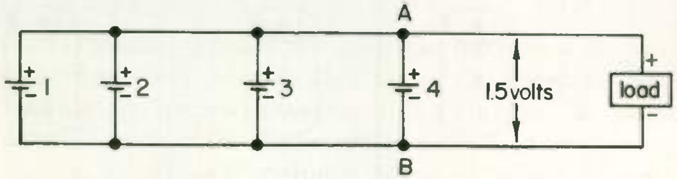

(b) schematic diagram

Fig. 31 Cells connected in parallel.

same as the voltage of a single cell. Thus in Fig. 31, where four 1.5-volt cells are shown connected in parallel, the battery voltage is 1.5 volts. While cells of different voltage values may be connected in series, only identical cells should be connected in parallel. Otherwise, the higher-voltage cells in the parallel group would discharge through the lower-voltage ones. Care should be taken to see that a bad cell is not connected in parallel with good ones, since the good cells may be ruined by discharging through the bad one.

Cells are connected in parallel in order to increase the life of the battery while under load. Thus cells are connected in parallel when they are to be used in a circuit drawing a heavy current. Two cells in parallel will last approximately twice as long under a given load as a single cell before needing to be replaced or recharged. Similarly, three cells in parallel will last approximately 3 times as long, and five cells in parallel, 5 times as long. The life of cells under load is not increased by using a series connection.

If both higher voltage and longer load life are needed, cells can be connected in a series-parallel arrangement. Enough cells are connected in series to give the desired voltage, and then this group of cells is connected in parallel with as many identical groups of series-connected

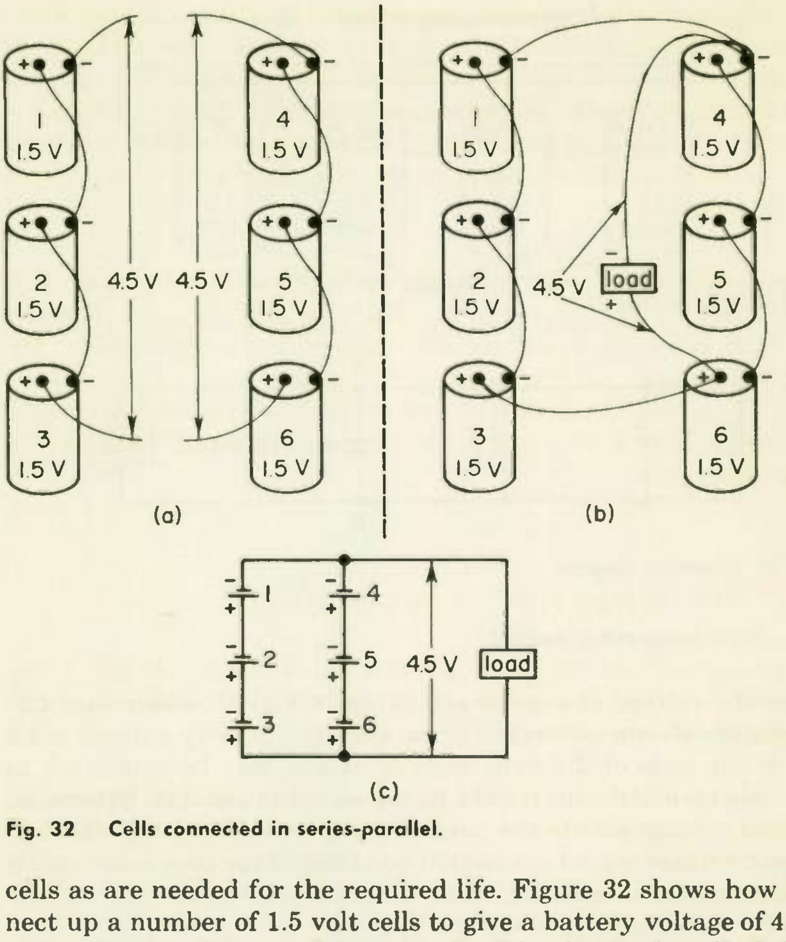

Fig. 32 Cells connected in series-parallel.

cells as are needed for the required life. Figure 32 shows how to connect up a number of 1.5 volt cells to give a battery voltage of 4.5 volts with a battery life equal to twice the life of a single cell. Cells 1, 2, and 3 are first connected in series, as shown in Fig. 32(a). The voltage of the three in series is $3 \times 1.5 = 4.5$ volts. Then cells 4, 5, and 6 are connected in series, which also give 4.5 volts. We thus have two 4.5 volt batteries in (a). Now if two batteries are connected in parallel, the voltage will be same as for one battery, but will have twice the life with a given load that a single battery will have.

Figure 32(b) shows the two batteries of (a) connected in parallel. This is done by connecting together the two negative terminals of the batteries of (a), and similarly the two positive terminals. The schematic diagram of the series-parallel connection of (b) is shown in (c).

Suppose that a single cell of the battery of Fig. 32 can supply a current of 4 amperes for 10 hours before it is discharged, then one of the groups of three cells in series in (a) will also be able to supply 4 amperes for 10 hours. Connecting cells in series won't make them last any longer, but it will give you a higher voltage. However, the battery of Fig. 32(b) will last longer because it is made up of two batteries in parallel. It will supply a current of 4 amperes for 20 hours. Of course, it could furnish a current of only 2 amperes for twice as long, or for 40 hours.

Besides providing a longer load life, there is one other reason why batteries are often connected in parallel or in series-parallel. When a heavy load is put on a cell, the cell voltage drops appreciably. By connecting cells in parallel or in series-parallel, this voltage loss is reduced. Two cells in parallel, or two groups of series-connected cells in parallel, will have only half the voltage loss of a single cell or of a single series group.

WHAT HAVE YOU LEARNED?

1. If you have a 1.5-volt cell, a 1.3-volt cell, and a 2-volt cell, there is only one way they can be connected, and that is in (a) SERIES. The battery voltage is then (b) 4.8 volts.

2. You need a 90-volt battery to power an amplifier. You have a 30-volt battery, a 45-volt battery, and a 60-volt battery. You can get the required 90 volts by Connecting the 30v + 60v in Series.

3. A No. 6 dry cell, which develops 1.5 volts, can supply a current of 2 amp for 15 hr (hours) before needing replacement. How long will three No. 6 dry cells connected in series supply a current of 2 amp? 15 hours.

4. You want to connect up No. 6 dry cells to supply a constant current of 2 amp at 1.5 volts for 45 hr. You would use (a) 3 cells, which you would connect in (b) PARALELL.

5. The electrical system in most modern cars requires 12 volts to operate properly. The voltage per cell of storage batteries of the type used in cars is approximately 2 volts. Are the cells of a car storage battery connected in series or in parallel? (a) SERIES. How many cells has a car storage battery? (b) 6.

6. The cells in the battery circuit of Fig. 33 are connected in (a) SERIES PARALELL. The battery voltage is (b) 5 VOLTS. Each cell in this battery has a life of 25 hr when delivering a 1-amp current continuously. This battery will deliver a 1-amp current continuously for approximately (c) 75 hours.

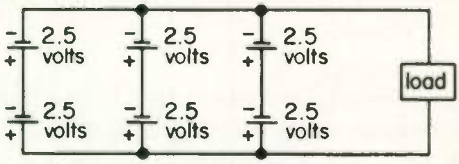

Fig. 33(a)

7. Connect up the cells in Fig. 33(b) in accordance with the schematic diagram of Fig. 33(a).

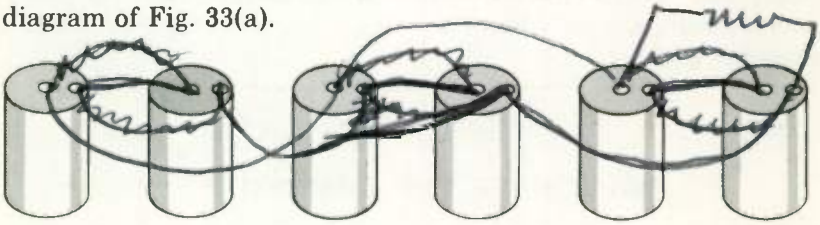

Fig. 33(b)

ANSWERS

1. (a) Series . . . Cells must be of equal voltage before they can be connected in parallel.
   (b) 4.8 . . . 1.5 volts + 1.3 volts + 2 volts = 4.8 volts.
2. Connecting the 30-volt and the 60-volt batteries in series.
3. 15 hr . . . The life of cells is not extended when the cells are connected in series.
4. (a) Three (b) Parallel . . . One cell will last 15 hr: 3 × 15 hr = 45 hr.
5. (a) Series . . . Enough 2-volt cells must be connected in series to obtain a 12-volt output from the battery.
   (b) Six . . . The battery voltage of six 2-volt cells in series is 6 × 2 volts = 12 volts.
6. (a) Series-parallel; (b) 5 volts
   (c) 75 hr . . . Three groups of cells are connected in parallel for a life of 3 × 25 hr = 75 hr.
7.

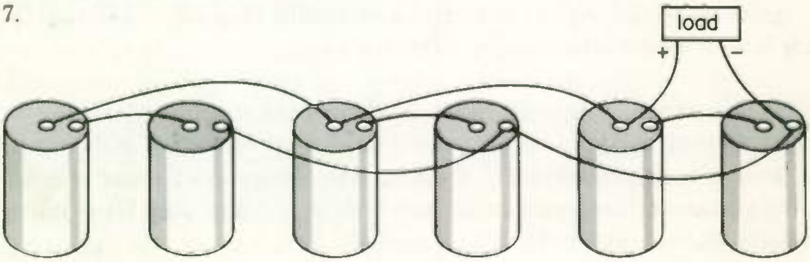

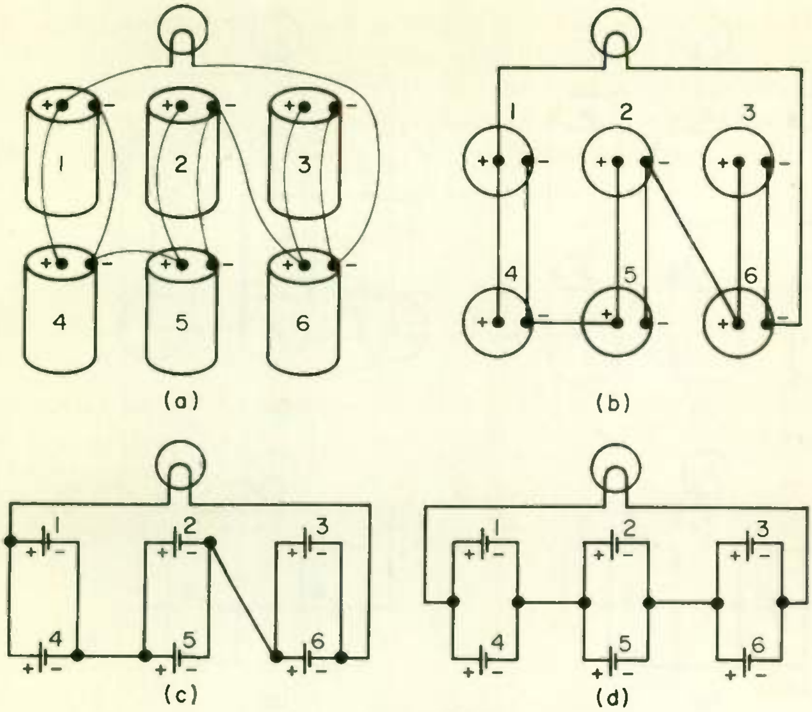

(a) (b) (c) (d)

Fig. 34 **Steps in drawing a schematic diagram from wiring.**

23 TRACING THROUGH WIRING . . . It is often necessary for a technician to draw a schematic diagram by tracing wiring. As an example, let us draw a schematic diagram for Fig. 34(a) to see how the battery is connected.

To get started, we can make the wiring look a lot less formidable by doing nothing more than redrawing the battery as you would see it looking down from above, and at the same time straightening out the wiring. This is done in part (b) of the figure. The next step is to replace the cells in (b) with their proper electronic symbol. Our drawing then looks as in (c). The final step is to rearrange the parts and wiring so as to make the drawing as clear as possible. This has been done in (d), which is the schematic diagram for the battery of (a). It is always a good idea to number the cells as shown, so that corresponding cells in the different diagrams can be easily identified.

Now let's try another circuit, that of Fig. 35(a). As before we first draw the circuit looking down from the top, and with the wiring straightened out, as in (b). We have made one small change in the

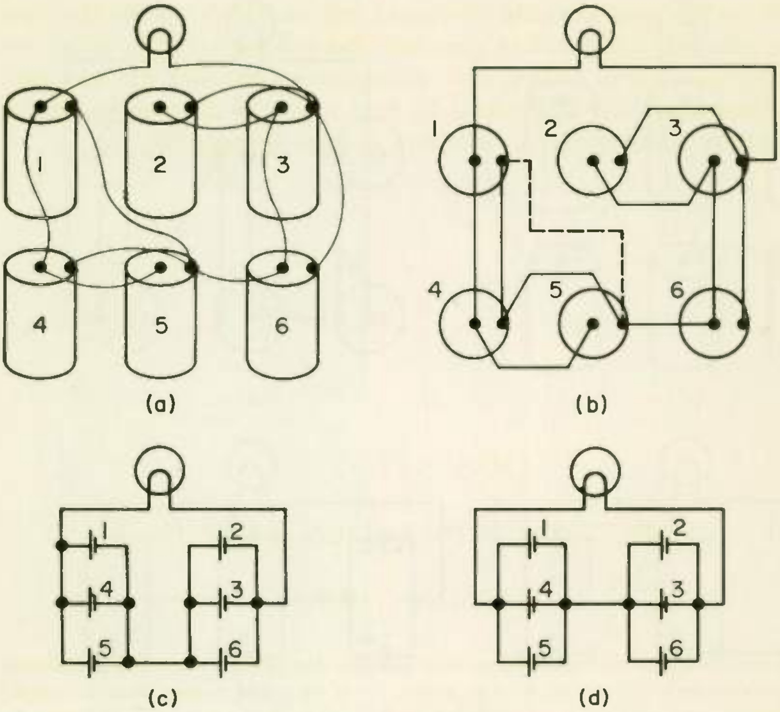

Fig. 35 Another example in drawing a schematic diagram.

wiring connections. In (a) the negative terminal of cell 1 (the outside terminal of a dry cell is always the negative terminal) is connected to the negative terminal of cell 5. If we draw (b) strictly in accordance with (a), we would have connected the negative terminals of cells together as shown by the dashed line in (b). Instead we connected the negative terminal of cell 1 to the negative terminal of cell 4. Electrically there is no difference, since the negative terminal of cell 1 is still electrically connected to the negative terminal of cell 5 by means of the wire between the negative terminal of cell 4 and the negative terminal of cell 5. We made this change because the simpler we can get the wiring to look, the easier it is to analyze it.

Next we study Fig. (b) a little, trying to notice some pattern to the wiring. Notice that the positive terminals of cells 1, 4, and 5 are connected together, and the same with the negative terminal. In other words these three cells are connected together the same way as are the cells in Fig. 31; that is, they are connected in parallel. Next examine cells 2, 3, and 6, noticing that these three cells are also connected in parallel.

We now make a new drawing (shown in (c)), in which we use the electrical symbol for a cell rather than drawing cell tops, and in which we rearrange the cells so that 1, 4, 5, which are in parallel, are in a row, and the same for cells 2, 3, and 6. In Fig. 35(d) the drawing is further rearranged so as to make the diagram as clear as possible.

LESSON 2312-5

ELECTRONICS IN ACTION, PART II

EXAMINATION

Circle the number of the correct answer for each question that follows. When you are finished, transfer the answers to the answer sheet by putting X's in the proper quares. When the graded answer sheet is returned to you, correct in this book any questions you may have missed. By doing so, you will have a record of the correct answers to all questions for review purposes.

1. With respect to electrons, the difference between conductors and nonconductors is:
   (1) A conductor has few free electrons, while a nonconductor has many free electrons.
   (2) A conductor has few free electrons, but a nonconductor has no free electrons.
   (3) A conductor cannot be distinguished from a nonconductor in terms of electrons.
   [✓ (4)] A conductor has many free electrons, while a nonconductor has few free electrons.

2. Copper is by far the most widely used conductor because it
   [✓ (1)] is one of the best conductors, solders well, and is reasonably low in cost.
   (2) is the best conductor of all the metals.
   (3) solders well and is stronger than other metals.
   (4) has a low resistance that is not affected by temperature changes.

3. Four materials that are good insulators at radio frequencies are:
   (1) Pyrex, Mycalex, hard rubber, fiber
   (2) Isolantite, polyethylene, slate, glass
   [✓ (3) quartz, polymerized styrene, steatite bodies, Pyrex]
   (4) quartz, porcelain, cotton, clay

4. Four materials that are not good insulators at radio frequencies but prove satisfactory for use at commercial-power frequencies are:
   (1) cotton, hard rubber, mica, polyethylene
   [✓ (2) cotton, hard rubber, paraffin, clay]
   (3) slate, fiber, Mycalex, Pyrex
   (4) quartz, porcelain, Bakelite, fiber

5. What material is frequently used for relay contacts? Why?
   [✓ (1) Silver. High conductivity, does not pit easily, and is relatively unaffected by atmospheric gases.]
   (2) Copper. High conductivity, does not pit easily, and is relatively unaffected by atmospheric gases.
   (3) Aluminum. Cheap, high compressive strength, and does not pit easily.
   (4) Bronze. It is a good insulator and has high compressive strength.

6. What material is best suited for use as an antenna-strain insulator that is exposed to the elements?
   (1) polymerized styrene
   (2) quartz
   (3) Bakelite
   [✓ (4) glazed porcelain]

7. By what other expression may an "electric current flow" be described?
   (1) proton flow
   (2) flow of potential difference
   [✓ (3) electron flow, or flow of other electric charges]

8. Direction of current flow *cannot* be determined by using a
   [✓ (1) ohmmeter.] (3) voltmeter.
   (2) compass. (4) ammeter.

9. By what other expression may a "difference of potential" be described?
   (1) current (3) coulomb
   [✓ (2) emf] (4) resistance
   (5) conductance

10. Define the term "coulomb."
    (1) The coulomb is a unit used to indicate the strength of an electric current.
    [✓ 2] The coulomb is a unit used to measure amount of electricity.
    (3) The coulomb is a unit used to measure the amount of attraction or repulsion between charges.
    (4) The coulomb is a unit used to measure the breakdown voltage of an insulator.

11. Name four methods by which an electrical potential may be generated.
    (1) hydraulically by a pump, chemically by a battery, mechanically by a generator, and by light using a photoelectric cell.
    (2) generator, thermocouple, resistor, battery
    (3) piezoelectric crystal, thermocouple, battery, transistor
    [✓ 4] generator, thermocouple, battery, piezoelectric crystal

12. What precautions to avoid personal injury should a person observe when making internal adjustments to a television receiver?
    [✓ 1] Discharge the filter capacitors by using an insulated shorting bar.
    (2) Stand on rug or wear nailless shoes while touching high-voltage circuit.
    (3) With the power on, short the filter capacitors to make sure they are discharged.
    (4) Always keep one hand on the chassis when working on "live" circuits.

13. What is the unit of resistance?
    (1) volt
    (2) ampere
    (3) mho
    (4) coulomb
    [✓ 5] ohm

14. State the three ordinary forms of Ohm's law.
    [✓ 1] $E = IR, R = \frac{E}{I}, I = \frac{E}{R}$
    (2) $E = \frac{I}{R}, R = EI, I = \frac{E}{R}$
    (3) $E = IR, R = \frac{I}{E}, I = \frac{R}{E}$
    (4) $E = IR, R = EI, I = \frac{E}{R}$

15. What method of connection should be used to obtain the maximum no-load output voltage from a group of similar cells in a storage battery?
    (1) parallel
    (2) series-parallel
    (3) either series or parallel depending on the number of cells involved
    [✓ (4) series]

16. Does the resistance of a copper wire vary with variations in temperature? If so, in what manner?
    (1) Yes. As temperature increases, resistance decreases.
    [✓ (2) Yes. As temperature increases, resistance increases.]
    (3) Yes. As temperature increases, resistance may either increase or decrease.
    (4) No. Temperature has no effect on resistance.

17. What effect does the cross-sectional area of a conductor have upon the resistance of the conductor per unit length?
    (1) Double the cross section and the resistance is doubled.
    (2) Halve the cross section and the resistance is halved.
    (3) Cross-sectional area has no effect on resistance.
    [✓ (4) Double the cross-sectional area, halve the resistance.]

18. If the diameter of a conductor of given length is doubled, how will the resistance be affected?
    (1) doubled
    [✓ (2) quartered]
    (3) halved
    (4) remain the same

19. What four factors govern the resistance of a conductor?
    [✓ (1) Length, cross-sectional area, temperature, type of material]
    (2) Length, tensile strength, temperature, current
    (3) Current, voltage, conductance, temperature
    (4) Length, temperature, conductance, emf

20. What would be the value of tolerance of a resistor if color-coded from left to right: green, brown, green, gold?
    (1) 10 per cent
    (2) 20 per cent
    [✓ (3) 5 per cent]
    (4) 1 per cent

21. Why is rosin used as soldering flux in radio construction work?
    - (1) Soldering can be done at lower temperature, so that delicate components are not damaged.
    - [✓ (2)] The corrosive action of other fluxes may cause high-resistance connections.
    - (3) Most wiring is with copper, and solder adheres better to copper when rosin flux is used.
    - (4) Fluxes other than rosin are conductors and sometimes cause short circuits.

22. A relay coil has a resistance of 40 ohms. It requires a current of 0.2 ampere. What voltage battery should be used to operate the relay?
    - (1) 0.005 volt
    - (2) 0.8 volt
    - (3) 5 volts
    - [✓ (4)] 8 volts
    - (5) 20 volts
    - (6) 80 volts
    - (7) 200 volts

23. The current through a circuit is inadequate. How could you increase the current?
    - (1) Increase the circuit resistance.
    - [✓ (2)] Use a higher-voltage battery to supply the current.
    - (3) Connect another battery in parallel with the one now being used and ground both sides of the load resistance.
    - (4) Use alternating current rather than direct current.

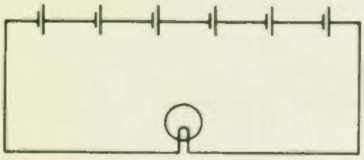

Question 25

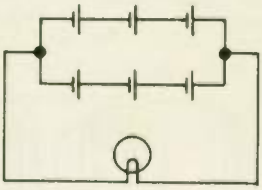

Question 26

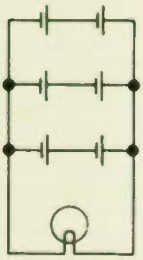

Question 27

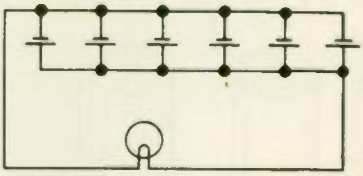

Question 28

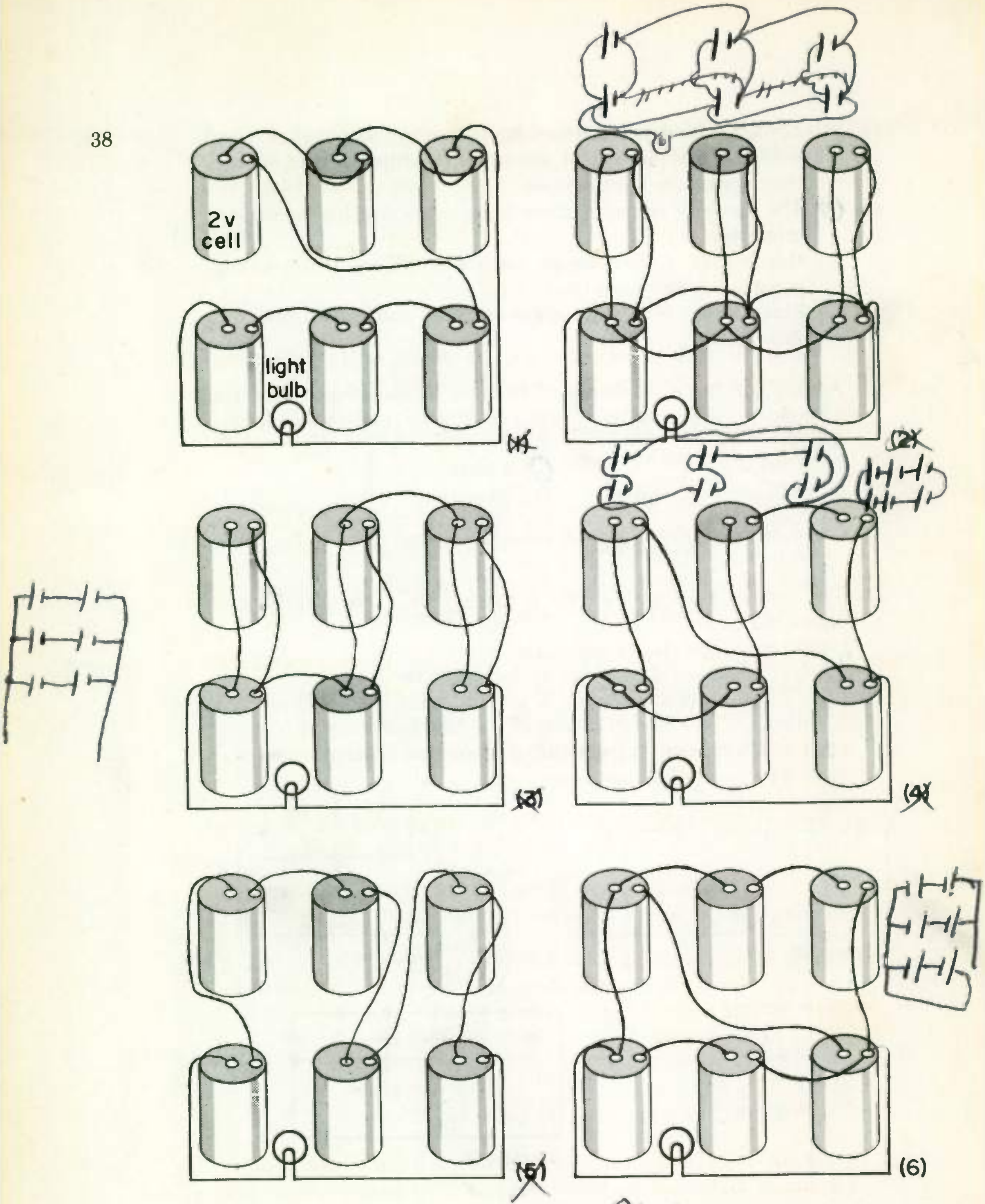

Fig. 36

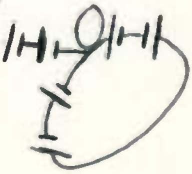

24. If an uncharged capacitor is connected to a power source, so that a steady 2 amperes of current flows into the capacitor for six seconds, the charge in the capacitor at the end of the six second period is

(1) 0.33 coulombs.
(2) 3 volts.
(3) 2 coulombs.
(4) 12 amperes.
(5) 12 volts.
[✓ (6)] 12 coulombs.
(7) None of the above.

25. In which one of the drawings of Fig. 36 are the cells connected in accordance with the schematic diagram marked Ques. 25? 5

26. In which one of the drawings of Fig. 36 are the cells connected in accordance with the schematic diagram marked Ques. 26? 4

27. In which one of the drawings of Fig. 36 are the cells connected in accordance with the schematic diagram marked Ques. 27? 6

28. In which one of the drawings of Fig. 36 are the cells connected in accordance with the schematic diagram marked Ques. 28? 2

29. If a 2-volt light bulb is used in Fig. 36, which drawing shows the cells properly connected for operating the light? Each cell is 2 volts. 2

30. If a 4-volt light bulb is used in Fig. 36, which drawing shows the cells properly connected for operating the light? 6

31. If a 6-volt light bulb is used in Fig. 36, which drawing shows the cells properly connected for operating the light? 4

32. If a 12-volt light bulb is used in Fig. 36, which drawing shows the cells properly connected for operating the light? 5

33. If a single cell in (5) of Fig. 36 will deliver a continuous current of 2 amperes for 12 hours, how long will the battery operate the light? Assume the bulb draws 2 amperes.

(1) 2 hours
(2) 4 hours
(3) 6 hours
[✓ (4)] 12 hours
(5) 24 hours
(6) 48 hours
(7) 72 hours

34. If a single cell in (2) of Fig. 36 will deliver a continuous current of 2 amperes for 12 hours, how long will the battery operate the light? (Choose your answer from selections for Question 33.)
72 hrs (7)

35. To avoid replacing the battery in a portable Geiger counter so often, you install an extra battery, identical to the first. This additional battery should be installed
    [✓ (1)] in parallel with the first, so that the operating voltage will not be changed, but the battery life will be increased.
    (2) in parallel with the first, so that a stronger current can be furnished to the counter.
    (3) in series with the first, the higher voltage enabling the counter to operate longer before battery replacement is necessary.
    (4) in series with the first, so that a strong current can be furnished almost up to the time when the battery is completely discharged.

36. A circuit is drawing 12 amperes of current. If the circuit resistance is reduced to one-third of its original value (the voltage not changing), the circuit current will then be
    (1) 4 amperes.
    (2) 6 amperes.
    (3) 12 amperes.
    [✓ (4)] 36 amperes.
    (5) None of the above values.
    (6) Not enough information given to determine the current.

37. You can produce heat with electricity by
    (1) generating a voltage.
    (2) by passing current through a circuit without resistance.
    [✓ (3)] by passing current through a resistance.
    (4) by passing current through a coil with no resistance.

38. An electric toaster works on the principle that heat is generated when
    (1) current passes through a coil.
    [✓ (2)] current passes through a resistance.
    (3) voltage is used.
    (4) a charge is put on metal plates.

39. You are asked to repair an electric toaster that does not put out sufficient heat. According to the nameplate, the unit should draw 6 amperes when used on the usual 120-volt electrical outlet. You measure the resistance of the toaster with an ohmmeter and find it to be 40 ohms. The toaster resistance should be (assume hot and cold resistances are equal)
    (1) 40 ohms.
    (2) 0.05 ohm.
    (3) 3 ohms.
    [✓ (4)] 20 ohms.
    (5) 5 ohms.
    (6) 0.5 ohm.
    (7) 720 ohms.
    (8) 240 ohms.

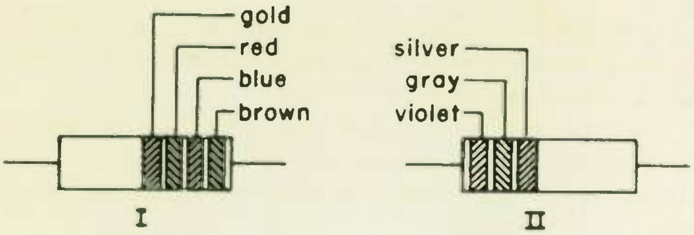

Fig. 37

40. The current actually being drawn by the toaster of Question 39 is
    - (1) 12 amperes.
    - (2) 6 amperes.
    - [✓ (3)] 3 amperes.
    - (4) 1.2 amperes.
    - (5) 0.6 ampere.
    - (6) None of the above.

41. The resistance of resistor I in Fig. 37 is
    - [✓ (1)] 162 ohms.
    - (2) 260 ohms.
    - (3) 261 ohms.
    - (4) 1600 ohms.
    - (5) 2600 ohms.
    - (6) 6100 ohms.
    - (7) None of the above.

42. The resistance of resistor II in Fig. 37 is
    - [✓ (1)] 0.78 ohm.
    - [✓ (2)] 0.87 ohm.
    - (3) 7.8 ohms.
    - (4) 8.7 ohms.
    - (5) 78 ohms.
    - (6) 87 ohms.
    - (7) None of the above.

43. The tolerance of resistor I in Fig. 37 is
    - (1) ± 1 percent.
    - [✓ (2)] ± 5 percent.
    - (3) ± 10 percent.
    - (4) ± 20 percent.
    - (5) Not indicated on resistor.

44. The tolerance of resistor II in Fig. 37 is (Choose your answer from selections for Question 43.)

③ ④

END OF EXAM


CLEVELAND INSTITUTE OF ELECTRONICS

CLEVELAND INSTITUTE OF ELECTRONICS / CLEVELAND, OHIO

electronics

CLEVELAND INSTITUTE OF ELECTRONICS / CLEVELAND, OHIO

Alternating-current Circuits

2304-3

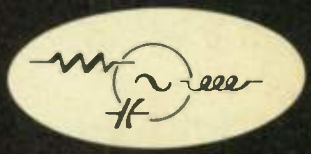

An AUTO-PROGRAMMED™ Lesson

ABOUT THE AUTHOR

This text on Alternating Current Circuits was written by Jacob J. Gustincic. In writing this lesson, the constant aim of the author was to ensure that the material presented was accurate, useful, and interesting.

Jacob Gustincic is a graduate of Case Institute of Technology where he received his Bachelor of Science, Master of Science, and Doctor of Philosophy degrees in Electrical Engineering. He is currently an Assistant Professor at UCLA.

Mr. Gustincic has had extensive experience as a technician primarily in maintenance repair, and operation of police department electronics equipment. He is a radio ham and his call letters are W8RAC.

This is an AUTO-PROGRAMMED* Lesson exclusive with the Cleveland Institute of Electronics. It is your assurance of the finest in technical education and training.

**Trademark*

Accredited by the Accrediting Commission
of the National Home Study Council

The Accrediting Commission has been approved by the U.S. Office of Education as a "nationally recognized accrediting agency".

CLEVELAND INSTITUTE OF ELECTRONICS

Alternating-current Circuits

By JACOB J. GUSTINCIC, Ph.D.
Assistant Professor
University of California at Los Angeles

2304-3

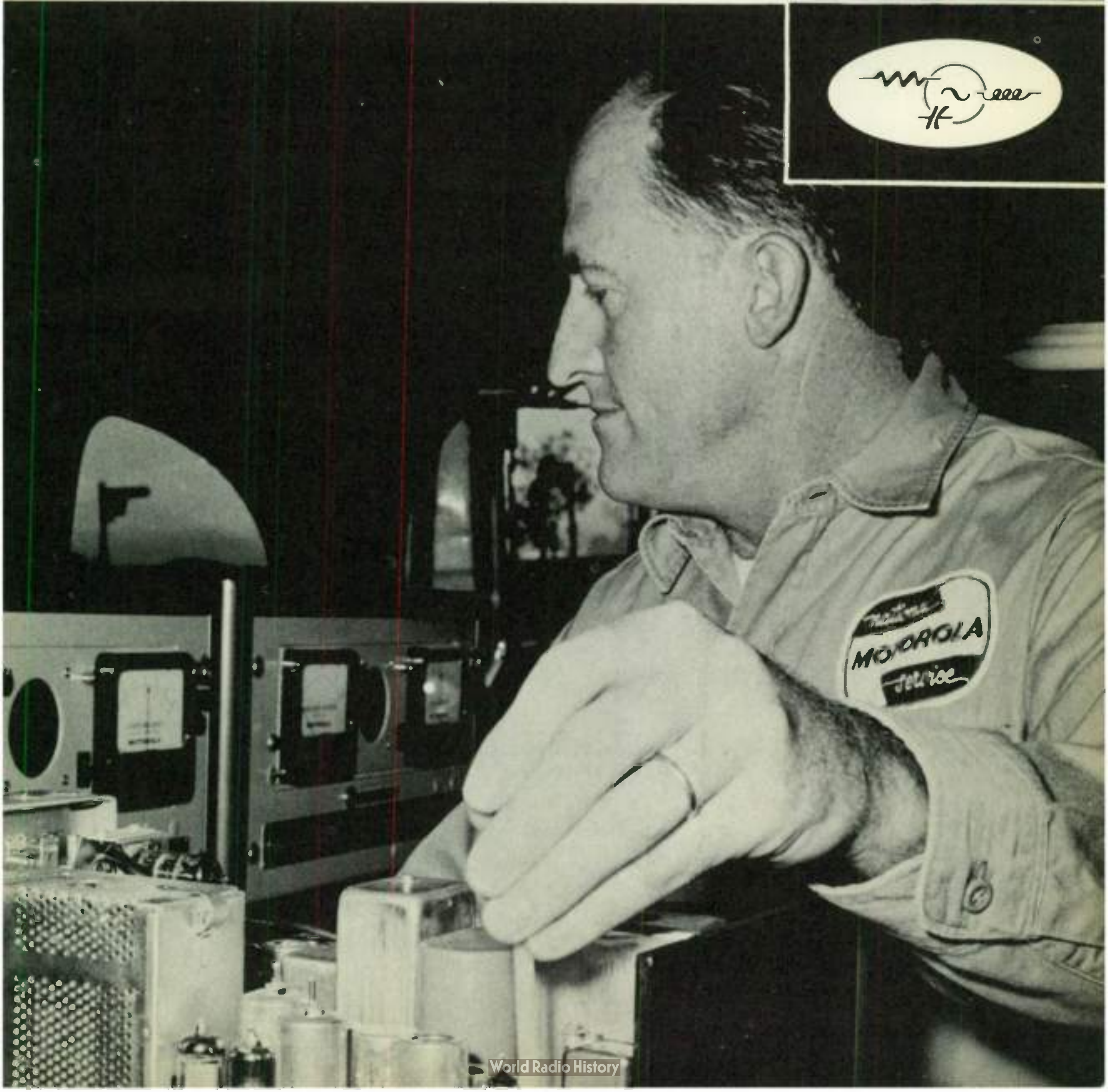

In this lesson you will learn...

Technician checks two-way radio in service van.

Photo: Courtesy, Motorola Communications
and Electronics, Inc.

SECOND EDITION/Fourth Revised Printing/August 1967.

2304-3

A chat with your instructor

Roughly speaking, all voltages and currents which occur in electronic work are divided into two classes, d-c and a-c. The kind of voltage or current you obtain from a battery is d-c; it has one certain value which does not change with time. A 100-volt battery, for instance, is always 100 volts. On the other hand, a-c voltages and currents do not maintain one certain value. These quantities rise and fall with time much like the ripples in a stream.

Undoubtedly, a-c has by far the greatest interest for the practical technician. A-c occurs everywhere. The 110-volt power line in your home is an a-c voltage. The audio voltage on your telephone lines is a-c. In fact, any piece of electronic gear will contain some kind of a-c voltage and current.

Capacitors, inductors, and transformers are devices which find their greatest application in a-c work. These devices occur as commonly in a-c circuits as resistors occur in d-c circuits.

Most people are familiar with d-c and its applications to a certain extent. A limited knowledge of Ohm's law and the behavior of resistances enables you to deal with most problems involving d-c from batteries and high-voltage power supplies. In this lesson you will learn how to extend this knowledge so you will be able to deal with capacitors and inductors in a-c circuits just as easily as you deal with resistors in d-c circuits.

No simple device exists for raising the value of a d-c voltage. If you have a 100-volt battery, you cannot obtain 150 volts from it by a simple means. The value of an a-c voltage, however, can easily be raised or lowered by means of a simple device, called a transformer, which is discussed in this lesson. Incidentally, one way of raising the d-c voltage of a battery is to first change the d-c to a-c, then raise the a-c with a transformer, and finally change the raised a-c back to d-c by means of a rectifier. This is what is commonly done in a transistor power supply.

Once you have been introduced to the use of capacitors and inductors in a-c circuits, you will immediately see how capacitors, inductors, and resistors can be used in circuits which contain both a-c and d-c. Such circuits are very common in all vacuum-tube and transistor amplifiers. Capacitors are used to couple a-c voltages in and out of an amplifier while leaving the d-c voltages necessary for the operation of the device unchanged. Inductors, on the other hand, are used to couple those d-c voltages into the amplifier while leaving the a-c voltages unchanged.

At the end of each topic in this lesson you will find questions put there to fix clearly in your mind the ideas of the topic. By answering each of these questions carefully, you will obtain a thorough working knowledge of the subjects which I have mentioned here.

Alternating-current Circuits

A-C CHARACTERISTICS

1 GRAPHING VOLTAGES . . . To understand the d-c and a-c voltages and currents which are encountered in electronic work, you must first understand how graphs are used to show these quantities. As you know, a d-c voltage is the kind of voltage you obtain from a battery —its value is constant and does not change with time. Figure 1(a) shows a graph of the readings of a voltmeter connected to a 100-volt battery.

Referring to the graph, the numbers on the horizontal axis indicate the amount of time which has elapsed since the voltmeter was connected. The height of the graph above these time points indicates what the voltmeter is measuring at that time. At time 0 the voltmeter is connected, and it reads 100 volts. Since d-c voltage does not vary with time, 10 sec later, at $t = 10$, the voltage is still 100 volts. Similarly, 20 sec later at $t = 20$, the voltage is 100 volts. The graph of a

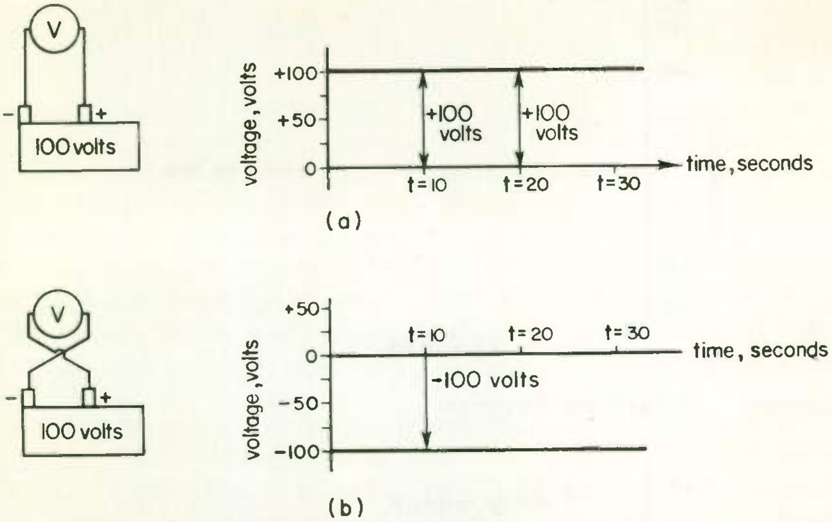

Fig. 1 **Graphs of a d-c voltage of 100 volts.**

d-c voltage is always a straight line, since no matter at which time you look at the voltage, the voltage is the same. If the battery terminals are now reversed, the voltage being measured is negative. To indicate this reversal in polarity, the value of the voltage is drawn beneath the time axis, as shown in Fig. 1(b).

WHAT HAVE YOU LEARNED?

1. The 100-volt battery of Fig. 1(a) is replaced by a 50-volt battery. To indicate this reduction in voltage, you would make the graph of the voltage ______________ as far from the time axis as it is now.

2. Graphs can be used to show current in the same way they show voltage. In a current graph, the horizontal axis would indicate how much (a) __________ had elapsed after an ammeter was connected into a circuit. The height of the graph above these points would give the value of the (b) ______________ at these times.

3. You have made voltage measurements across two resistors, with respect to ground, in a video amplifier. The voltmeter indicates 30 volts across resistor R_1 at all times and -60 volts across R_2 at all times. Draw lines on the graph in Fig. 2 to indicate these measurements.

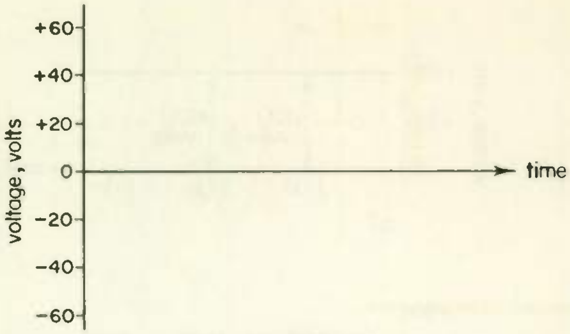

Fig. 2

ANSWERS

1. One-half 2. (a) Time; (b) current
3.

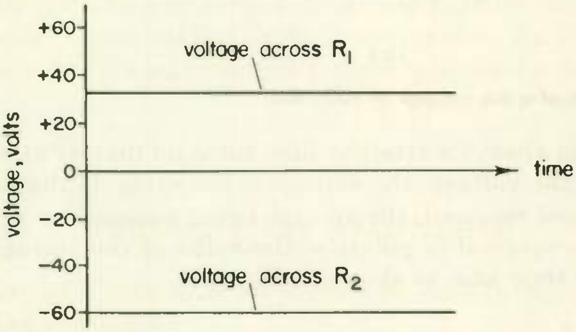

Fig. 3

2 THE SINE WAVE . . . A-c voltages and currents differ from d-c voltages and currents in that a-c quantities vary with time. The graph of an a-c voltage would not be a straight line because the value of the voltage would be constantly changing as you were measuring it.

The most important type of a-c voltage is the sine wave, or sinusoidal (sign-u-SOY-dull) wave. Most of the formulas relating to a-c circuits are true only for sine waves. Some examples of sine-wave voltages are the voltage from the wall outlets in your home, the voltage output of an audio signal generator, and the unmodulated output of a radio transmitter.

Figure 4 shows an example of what a voltmeter would measure if it were connected to a sine-wave source with an extremely low frequency. At $t = 0$ the value of the voltage is zero. At $t = 5$, that is, 5 sec later, the voltage is rising to a value of 100 volts, which it reaches at $t = 10$ sec. From this point the voltage falls to zero at $t = 20$, and then it becomes negative. It repeats its rise and fall negatively, finally

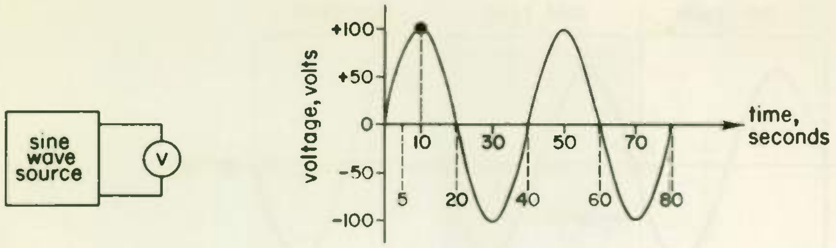

Fig. 4 A sinusoidal voltage wave.

reaching zero again at $t = 40$ sec. This positive and negative rising and falling keeps repeating itself as time goes on.

In general, a-c voltages may have graphs of many different shapes. However, any a-c voltage whose graph has the shape shown in Fig. 4 is classified as a sinusoidal wave. Examples of a-c waves which are not sine waves are shown in Fig. 6

WHAT HAVE YOU LEARNED?

1. A d-c voltage (a) *(does) (does not)* vary with time. The graph of such a voltage is a (b) ____________ ________. An a-c voltage does not yield a straight-line graph because such a voltage (c) ____________ with time. The sine wave of Fig. 4 begins with zero value at $t = 0$. You must wait (d) ________ seconds before the voltage rises to 100 volts. At $t = 30$ the value of the voltage is (e) ________ volts.

2. At $t = 10$ sec the voltage graphed in Fig. 4 reaches a peak value of 100 volts. The time which elapses between the +100-volt peaks of the wave is (a) ________ seconds. Since the sine wave repeats itself, the voltage will also be +100 volts at $t = 50$, $t = 90$, $t =$ (b) ________, $t = 170$ sec, etc.

3. Between $t = 20$ and $t = 40$ the graph of the sine wave lies below the time axis. During this period all the values of the sine wave are ______________.

ANSWERS

1. (a) Does not; (b) straight line; (c) varies; (d) 10; (e) −100
2. (a) 40; (b) 130 3. Negative

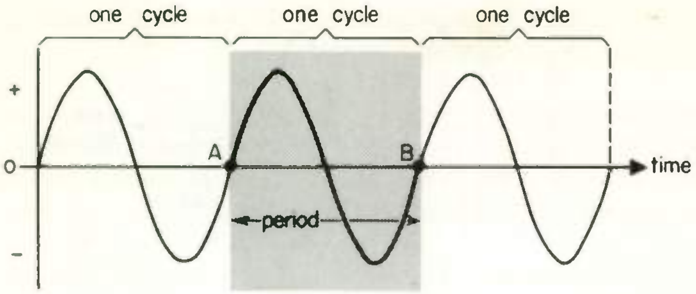

Fig. 5 The sine wave, composed of repeating cycles.

3 CYCLES, PERIOD, AND FREQUENCY . . . Figure 5 shows the graph of a sine wave. This wave is made up of a pattern composed of a positive and negative rise and fall which repeats itself again and again. One of these patterns, the portion of the wave between A and B, for example, is called one *cycle* of the wave. The period of time which it takes for the wave to go through one cycle is called the *period* of the wave. Thus if the wave started its cycle at point A at $t = 0.01$ sec and finished at point B at $t = 0.02$ sec, the cycle would have taken 0.01 sec to complete itself. The 0.01 sec would represent the period of this sine wave. A period, then, is the time it takes to complete one cycle. The period tells you how fast the rising and falling of the wave is taking place.

Another, and equally common, way to describe the speed of fluctuations of the wave is to give the number of cycles which occur in one second. The number of cycles per second tells you how frequently the cycles are occurring and hence is called the *frequency* of the wave. The frequency and period of a wave are related by the simple formulas

$$\text{frequency} = \frac{1}{\text{period}} \qquad \text{or} \qquad \text{period} = \frac{1}{\text{frequency}}$$

If the period of the wave is 0.01 sec, the frequency of the wave is $1 \div 0.01 = 100$ cycles per second (written 100 cps or 100 ~). A cycle per second is also called a *Hertz* (abbreviated *Hz*). Thus, 100 cps = 100 Hz.

WHAT HAVE YOU LEARNED?

1. The repeating pattern which makes up the sine wave is called one
(a) ____________ of the wave. The length of a cycle in time is called the

(b) ____________ of the wave. The frequency of the wave is the number of (c) ____________ which occur in one second.

2. A radio-frequency wave might have a period of 0.333×10^{-6} sec. The frequency of this wave is (a) ____________ cycles per second. An audio-frequency wave has a frequency of 1000 cps and hence a period of (b) ____________ seconds. 1000 Hz means the same as (c) ____________ cps.

3. The period of the wave shown in Fig. 4 is (a) ________ seconds. Its frequency is (b) ________ cycles per second.

ANSWERS

1. (a) Cycle; (b) period; (c) cycles
2. (a) 3.00×10^{6}; (b) 0.001; (c) 1000
3. (a) 40; (b) 0.025 (or $\frac{1}{40}$)

4 **PEAK VALUE . . .** Figure 6 shows examples of a-c waves that are not sine waves. Since these waves are also made up of repeating patterns, the terms "period" and "frequency" and the formulas relating them

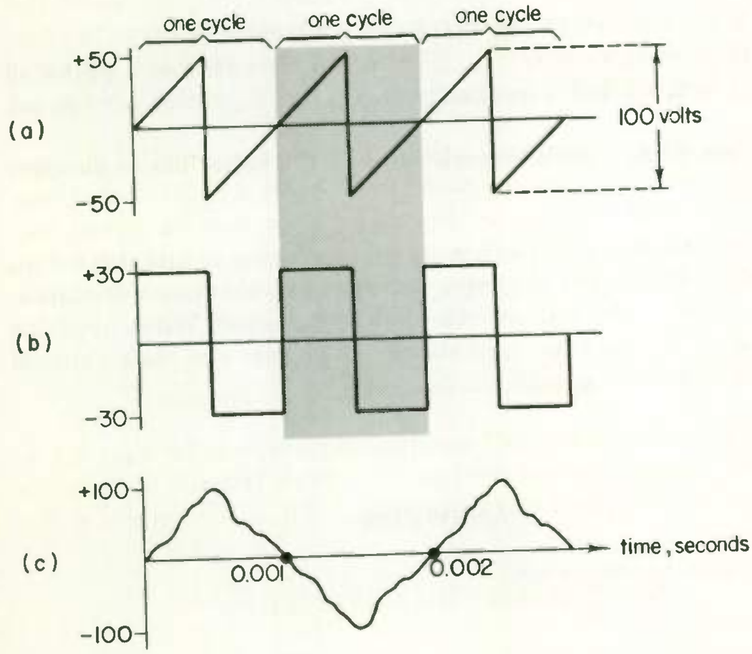

Fig. 6 A-c waves which are not sine waves.

are still applicable. Each repeating pattern represents one cycle of the wave. The length of one cycle is a period, and the number of cycles per second is the frequency.

The maximum value which any a-c wave reaches during one cycle is called the *peak value* of the wave. The sawtooth of Fig 6(a) has a peak value of 50 volts. The square wave of Fig. 6(b) rises to 30 volts and remains there for an entire half-cycle. Since 30 volts is the maximum value it reaches, this wave has a peak value of 30 volts.

The *peak-to-peak value* of a wave is the total value which the wave swings through while going from its highest to its lowest value. Since the waves we are dealing with rise as high positively as they fall negatively, the peak-to-peak value of these waves is twice the peak value. Conversely, the peak value is one-half the peak-to-peak value. The sawtooth wave of Fig. 6(a) swings from −50 volts to +50 volts, so it has a peak-to-peak value of 100 volts as shown.

WHAT HAVE YOU LEARNED?

1. The a-c wave shown in Fig. 6(c) has a peak value of (a) __________. Its peak-to-peak value is (b) ________ volts. This wave has a period of (c) ________ seconds and a frequency of (d) ________ cycles per second.

2. An a-c wave has a peak-to-peak value of 110 volts. The peak value of this wave is ________________.

3. A certain rectifier tube has a peak inverse rating of 100 volts. This rating tells you that if a negative voltage of more than 100 volts is applied to it, the tube will arc over and be damaged. When applying an a-c voltage to this tube, you should make sure the peak value of the voltage does not exceed ________ volts.

ANSWERS

1. (a) 100 volts; (b) 200; (c) 0.002
   (d) 500 . . . $\frac{1}{0.002} = 500$
2. 55 volts
3. 100 . . . This is the maximum negative value the a-c voltage reaches.

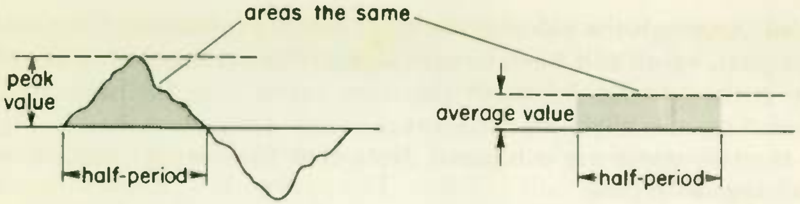

(a) any a-c wave

(b) the average value of the wave of (a)

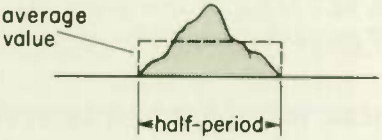

(c) The average value of the wave is the average height of the wave over the same half-period.

Fig. 7 **Average value of an a-c wave.**

5 AVERAGE VALUE . . . Refer to Fig. 7(a), in which a wave that could be any a-c wave is shown. It is frequently desirable to know the average value of an a-c wave for one half-cycle. The average value of a wave has application in measuring instruments, electroplating, and battery charging. One half-cycle of the wave of Fig. 7(a) is shown

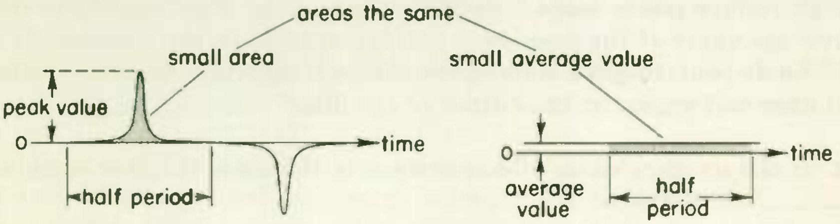

(a) a pulse wave

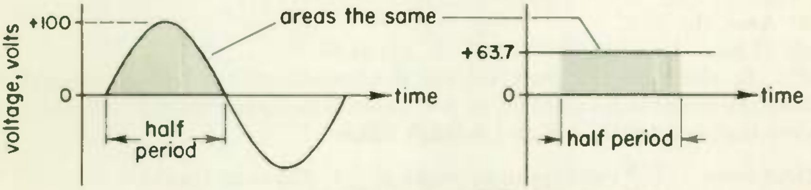

average value = 0.637 X peak value

(b) a sine wave

Fig. 8 **Average value for a pulse wave and a sine wave.**

shaded. Although the value of the wave changes constantly from zero to its peak value and back to zero again, the average value of the wave is the average height of the wave taken over the same half-period. Figure 7(b) shows the average value of the wave, and in Fig. 7(c) the two waves are compared. Note that the average value does not change with time.

Other examples of average value are shown in Fig. 8(a) and (b). In Fig. 8(b) the sine wave has a peak value of 100 volts. The average value of this wave is 63.7 volts. *A sine wave always has an average value* which is 0.637 times the peak value of the wave.*

WHAT HAVE YOU LEARNED?

1. The average value of an a-c wave is that value of d-c which encloses the same (a) ________ over a half-period. The average value of a sine wave is always (b) ________ times the peak value. A sine wave having a peak value of 50 volts has an average value of (c) ________ volts. Its d-c value is (d) ________ volts.

2. The square wave of Fig. 6(b) has a peak value of 30 volts. The average value of the square wave is ______ volts.

3. When a sinusoidal voltage is full-wave rectified and filtered, as in a high-voltage power supply, the d-c output of the filter is equal to the average value of the sine-wave voltage applied to the rectifier. If a 750-volt peak-to-peak sine-wave voltage is rectified, how much d-c voltage will appear at the output of the filter? ________

4. If the average value of a sine wave is 100 amp, its peak value is ________ amperes.

ANSWERS

1. (a) Area; (b) 0.637
   (c) 31.85 . . . $0.637 \times 50 = 31.85$ (d) 31.85
2. 30 . . . In this case the peak voltage is constant over a half-period and is therefore equal to its average, or d-c, value. The square wave is the only a-c wave that has equal peak and average values.
3. 238.9 volts . . . 750 volts (peak to peak) $\times \frac{1}{2} =$ 375 volts (peak)

   375 volts $\times$ 0.637 = 238.9 volts (d-c)

---

*By average value is meant the average over one-half of a cycle. The average over a full cycle is zero. One half of a cycle is often called an *alternation*. One alternation is positive and the other negative. Since the two alternations are equal in size, their sum is zero.

4. 157 . . . $\frac{100}{0.637} = 157$ (Divide average value by 0.637 to get peak value.)

6 EFFECTIVE VALUE . . . When a d-c voltage is connected to a resistance, a certain amount of heat is developed in the resistor because power is delivered to it by the voltage source. Figure 9 shows a battery of 100 volts heating a resistor of 10 ohms. If an a-c source having a peak value of 100 volts is also connected to a resistor of 10 ohms, power will again be delivered to the resistor in the form of heat. The 100-volt d-c battery is always 100 volts, while the a-c source is less than 100 volts most of the cycle and reaches 100 volts only at the peaks of the cycle.

Since the value of the a-c wave is less than its peak value over most of the cycle, the 100-volt-peak a-c wave will produce less heat than the 100-volt battery. You will find the same situation exists when you compare the ability of a-c and d-c to supply power in running a motor, operating a relay, lighting a bulb, etc. The peak value of an a-c wave just does not give a good indication of the heat- or power-producing capabilities of the wave, because it only tells you the maximum value of the voltage.

A much better way to describe the heat- or power-producing ability of any a-c wave is to give the *effective value** of the wave. The effective value of an a-c wave is that value of d-c which is equivalent to

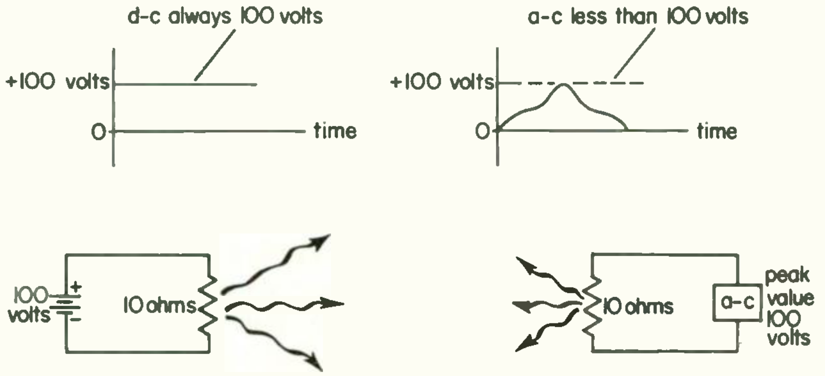

Fig. 9 **An a-c source with a peak value of 100 volts produces less heat than a 100-volt d-c battery.**

---

*Also known as the *rms value.*

the a-c wave for producing heat or running a motor or for any other application in which energy is used. An a-c source having an effective value of 20 volts would supply the same amount of heat to a resistor as a d-c battery of 20 volts.

Hence, if we say that the effective value of an a-c wave is 110 volts, we mean that the wave will produce the same power in a resistor as 110 volts of d-c would produce. You might think of the effective value of an a-c voltage as the working voltage of the wave. An a-c voltage of 110 volts effective value is equivalent to 110 volts d-c in furnishing power to heat a coffee pot or run an elevator.

WHAT HAVE YOU LEARNED?

1. When the 12 volt d-c from your car battery is switched on to the headlights, energy is dissipated in heat and light. If a 12-volt-peak a-c wave was applied to the headlights instead of the battery voltage, the headlights would become (a) *(dimmer) (brighter)*. If the a-c voltage is to make the headlights glow just as brightly as the battery voltage does, then the a-c voltage must have a(n) (b) ________________ value of 12 volts and not a(n) (c) ____________ value of 12 volts.

2. An a-c wave having a peak value of 10 volts will produce (a) *(more) (less)* heat in a given resistor than a 10-volt battery because the a-c wave has a value (b) ____________ than 10 volts over most of the cycle. Can an a-c voltage have an effective value greater than its peak value? (c) *(yes) (no)*

ANSWERS

1. (a) Dimmer; (b) effective; (c) peak
2. (a) Less; (b) less
   (c) No . . . because the a-c voltage never becomes greater than its peak value over any part of the cycle.

7 EFFECTIVE, AVERAGE, AND PEAK VALUES FOR THE SINE WAVE . . . The effective value of a sine wave is always 0.707 times the peak value. To put it another way, the peak value is 1.414 times the effective value. *Sine-wave voltages and currents are always given in terms of their effective values unless otherwise stated.* The 110-volt power lines in your home supply a 60-cycle sine-wave voltage having an effective value of 110 volts. To find the peak value of this voltage,

ou must multiply the effective value by 1.414. This relationship can e given in terms of the ratio of the effective value of a sine wave to ts peak value, which is 0.707:1, or in terms of the ratio of peak value o effective value, which is 1.414:1.

The average value of a sine wave is slightly less than the effective value of the wave. For a sine wave, the average value is always 0.637 times the peak value, so the ratio of average value to peak value is 0.637:1. Average value can be compared to effective value by giving the ratio of the average value to the effective value, which is 0.902:1. In other words, to find the average value from the effective value, you must multiply the effective value by 0.902. Table 1 summarizes the ratios for the sine wave. For other kinds of a-c waves the ratios differ from those given in Table 1.

TABLE 1

RATIOS FOR THE SINE WAVE

Effective value to peak value	0.707:1
Peak value to effective value	1.414:1
Average value to peak value	0.637:1
Average value to effective value	0.902:1

WHAT HAVE YOU LEARNED?

1. The effective value of a sine wave is always (a) ____________ times the peak value or the peak value is (b) ____________ times the effective value. A-c voltages are always expressed in terms of (c) ____________ value unless otherwise stated. If a sine wave has a peak value of 100 volts, the effective value of the wave is (d) ____________. The ratio of effective value to peak value for any sine wave is (e) ____________.

2. The peak value of the 110-volt 60-cycle a-c voltage in your home is (a) ____________ volts. The peak-to-peak value of this voltage is (b) ____________. The average value is (c) ____________. The ratio of average value to peak value for any sine wave is (d) ____________.

3. When a sinusoidal voltage is full-wave rectified and filtered, as in a power supply, the d-c output of the filter is equal to the average value of the sine-wave voltage applied to the rectifier. If a 600-volt sine wave is rectified, how much d-c will appear at the output of the filter? (a) ____________. The ratio of average value to effective value for the sine wave is (b) ____________.

4. When you get an electric shock, your nervous system experiences a jolt proportional to the peak value of the a-c voltage. A 300-volt sine wave will give you a *(bigger) (smaller)* shock than a sine wave whose average value is 310 volts.

ANSWERS

1. (a) 0.707; (b) 1.414; (c) effective; (d) 70.7 volts; (e) 0.707:1
2. (a) 155.5; (b) 311 volts; (c) 99.0 volts; (d) 0.637:1
3. (a) 541.2 . . . Remember that the 600-volt value is the effective value. Hence, $0.902 \times 600 = 541.2$ (b) 0.902:1
4. Smaller . . . The peak value of the 300 volts (eff) wave is 424 volts, while the peak value of the 310 volts (avg) wave is 487 volts.

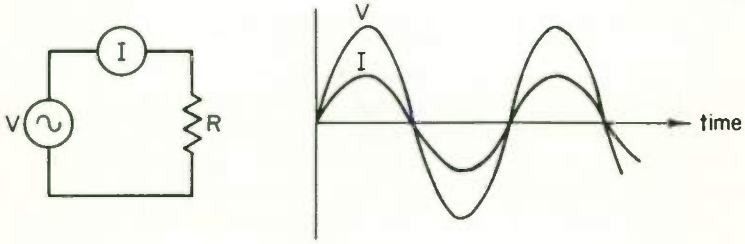

Fig. 10 The voltage across and current through a resistor.

8 PHASE . . . If a sinusoidal voltage is impressed across a resistance, a sinusoidal current will flow through the resistance. In Fig. 10 the voltage across and the current through a resistor are shown plotted on the same graph. The current flowing through a resistor is always in step with the voltage across it: when the voltage is zero, the current is zero; when the voltage reaches a peak, the current also reaches a peak. The voltage across a resistor and the current flowing through it are said to be *in phase* because they rise and fall together in this way.

Figure 11 shows two sine waves plotted on the same graph. Wave A reaches its first positive peak at $t = 5$ sec, while wave B reaches its first positive peak at $t = 10$ sec, 5 sec later. Similarly, the first negative peak of wave A occurs at $t = 15$ sec, while the first negative peak of wave B occurs at $t = 20$ sec, again 5 sec later than the corresponding value of wave A. In fact, the peaks and zeros of wave B occur 5 sec later than the corresponding values of wave A. The two waves A and B are said to be *out of phase* with each other, since the corresponding values of these waves do not occur at the same time.

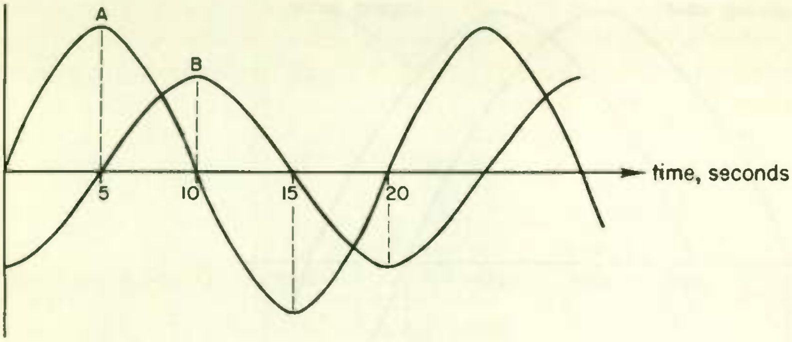

Fig. 11 Two sine waves out of phase.

WHAT HAVE YOU LEARNED?

1. If a sinusoidal voltage is applied to a resistor, a (a) ______________ current will flow. Since the voltage and current reach their peak and zero values at the same time, they are said to be (b) __________ phase. Two sinusoidal voltage waves whose peaks do not occur at the same time do not rise and fall together. These waves are said to be (c) __________ of phase.

ANSWERS

1. (a) Sinusoidal; (b) in; (c) out

9 MEASURING PHASE . . . Referring back to Fig. 11, the peak value of wave *A* occurs 5 sec before the peak value of wave *B*. Wave *A* undergoes the same fluctuation as does wave *B*, except that they occur 5 sec earlier. Because of this fact, wave *A* *leads* wave *B* in time. Note that wave *A* is leading wave *B* even though wave *B* appears to be first on the graph. Alternatively, since fluctuations of wave *B* occur 5 sec later than those of wave *A*, wave *B* is said to *lag* wave *A* in time.

The amount by which one wave leads or lags another wave is called *phase difference* or *phase angle* between the two waves and is measured in degrees. The phase difference between two waves may be measured by first marking off the time axis below a half-cycle of the leading wave from 0° to 180° as in Fig. 12. The point at which the lagging wave begins on this scale of degrees gives the phase difference. In Fig. 12 the phase angle is 45°.

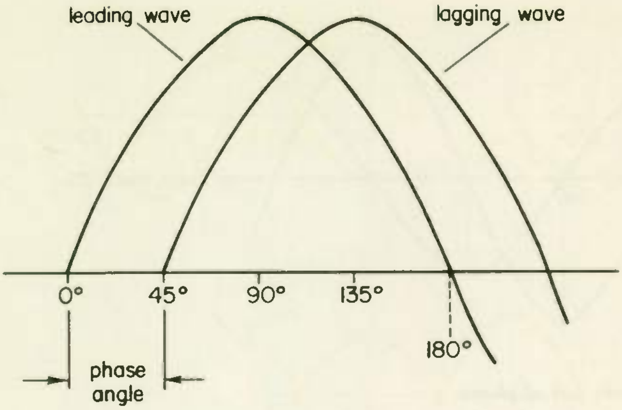

Fig. 12 Measuring phase difference.

Figure 13 shows some examples of sine waves out of phase. The two waves of Fig. 13(a) are in phase and have a phase difference of 0°. When the two waves are 90° out of phase, as in Fig. 13(b), the peak value of one wave occurs at the points where the other wave is zero. When two waves are 180° out of phase, as in Fig. 13(c), the positive peak of one wave occurs at the same point as the negative peak of the other. By learning the three cases of 0°, 90°, and 180° phase difference, you can easily estimate any phase angle in between.

WHAT HAVE YOU LEARNED?

1. In Fig. 13(b) wave *B* (a) *(leads) (lags)* wave *A* because the fluctuations of *B* occur (b) ____________ than those of wave *A*.

2. The phase difference between two waves is measured in (a) ________. The phase difference between the two waves of Fig. 11 is (b) ________ because the peaks of wave *A* occur when wave *B* has (c) ____________ value.

3. The voltage impressed on a resistance is ________ degrees out of phase with the current flowing through the resistance.

4. Two waves are ________ degrees out of phase when one wave is at a positive peak while the other wave is at a negative peak.

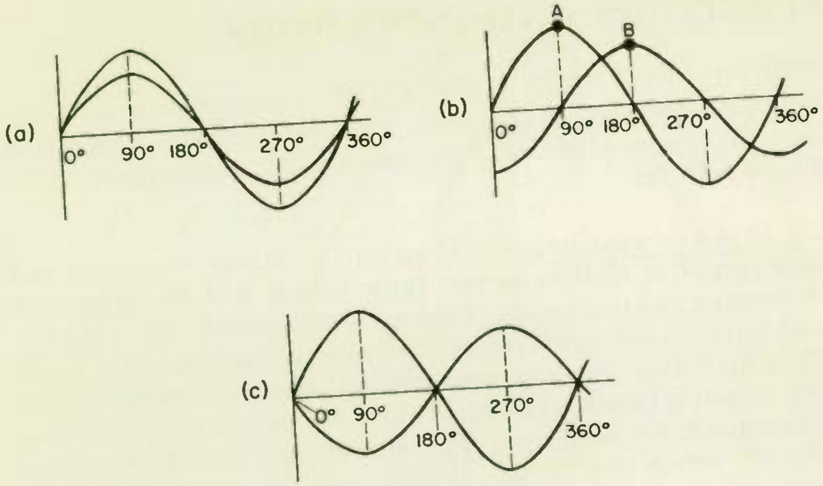

Fig. 13 Sine waves 0°, 90°, and 180° out of phase.

5. Two sine waves are shown in Fig. 14. Wave (a) ______ lags wave (b) ______ by approximately (c) ______ degrees. Another way of stating this same phase relation between the two waves is to say that wave (d) ______ leads wave (e) ______ by approximately (f) ______ degrees.

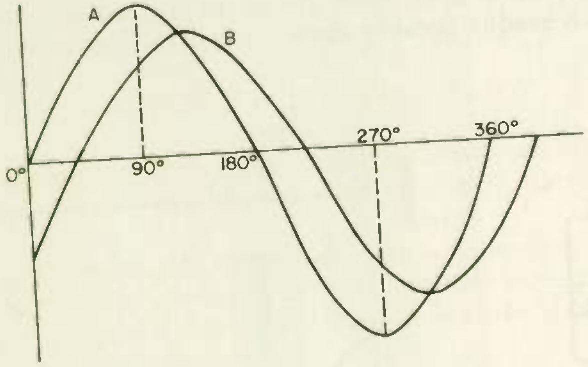

Fig. 14

ANSWERS

1. (a) Lags; (b) later 2. (a) Degrees; (b) 90°; (c) zero 3. Zero

4. 180° 5. (a) *B*; (b) *A*; (c) 45; (d) *A*; (e) *B*; (f) 45

10 CURRENT FLOW IN A CAPACITOR . . . Once a capacitor connected to a battery is charged, it will pass no d-c current. This is true because the separated plates of the capacitor act like an open circuit to the d-c voltage.

Figure 15 shows what happens when an a-c voltage *V* is connected across a capacitor *C*. Now as you know, a capacitor draws current while charging and discharging. During its first quarter-cycle, the impressed voltage rises from zero at point *A* to its peak value at point *B*. While the voltage is rising, the capacitor passes a charging current *I*. This current is largest at point *A* when the voltage rises from zero and the capacitor is uncharged. The current then diminishes to zero at point *B*, where the voltage is large and the capacitor is fully charged.

During the next quarter-cycle, the voltage falls from its maximum at *B* to zero at point *C*. The capacitor now discharges and passes a discharging current in the opposite direction. Since the current has turned around, it is negative and is shown as such on the current graph of Fig. 15.

As the impressed voltage continues to rise and fall, the capacitor charges and discharges again and again, passing an a-c current. Thus, although a capacitor is an open circuit to d-c, an a-c current will flow through it readily because the a-c voltage across it is constantly

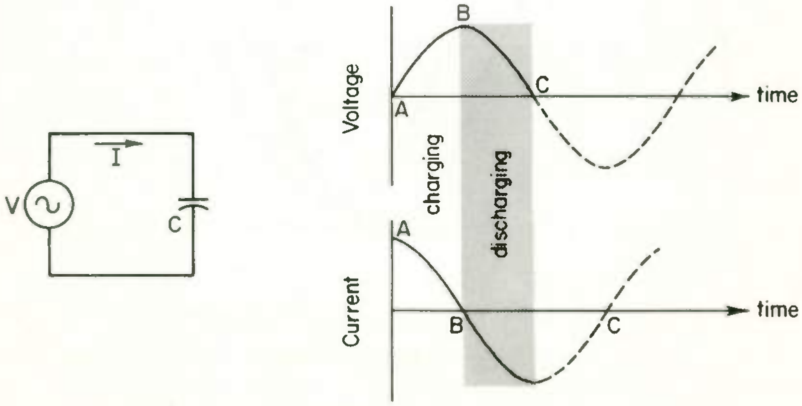

Fig. 15 Voltage and current in a capacitor.

changing. This property of capacitors is very important, since capacitors are often used to block a d-c current while passing an a-c current.

In saying that alternating current flows through a capacitor, we do not mean that there is an electron flow through the dielectric, which is an insulator. Current and electron flow do not mean exactly the same thing. If the observed effect is the same as that produced by an electron flow, it can be called a current, even though there is no electron flow.

WHAT HAVE YOU LEARNED?

1. A capacitor can be thought of as an (a) __________ circuit to d-c. If a d-c voltage is connected to a capacitor, no steady (b) ________ can flow.

2. A capacitor does draw current while (a) ______________ and (b) ______________ .As the voltage applied to a capacitor rises and falls, the capacitor charges and discharges. This action results in an (c) ________ current which flows (d) ____________ the capacitor.

3. An a-c generator and a d-c battery are both connected in series with a capacitor, as in Fig. 16. Only (a) ____________ current will flow because the capacitor blocks the (b) _____________ current.

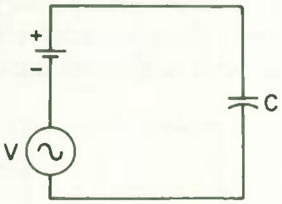

Fig. 16

ANSWERS

1. (a) Open; (b) current; 2. (a) Charging; (b) discharging; (c) a-c; (d) through
3. (a) A-c; (b) d-c

11 REACTANCE . . . Capacitors, like resistors, offer opposition to current flow. However, there are two important differences between capacitors and resistors: (1) Current passing through the opposition of a capacitor does not dissipate power. A capacitor, unlike a resistor, does not become warm when connected into a circuit. (2) The voltage

across a capacitor is not in phase with the current through it. Since the opposition to current flow of a capacitor differs from that of a resistor, it is called *reactance* instead of resistance. However, reactance *does* measure opposition to current flow, so it is measured in ohms just as resistance is.

The symbol for the reactance of a capacitor is *Xc*. You can find the a-c current which flows through a capacitor by dividing the value of the applied voltage by the reactance of the capacitor, in ohms. Or just as well, you can find the voltage across a capacitor by multiplying the current through it by the reactance—just as if you were using resistance to find a d-c voltage or current. For example, if a 100-volt sine-wave source were connected to a capacitor having a reactance of 5 kilohms, the current which would flow is just the voltage divided by the reactance, or 100 ÷ 5000 = 20 ma.

WHAT HAVE YOU LEARNED?

1. Reactance, like resistance, measures (a) ________________ to current flow. Reactance is different from resistance because an a-c current cannot dissipate (b) ________ in a capacitor and because the reactance produces a (c) __________ difference between the voltage across it and the current through it.

2. You connect an audio oscillator supplying a voltage of 10 volts to the circuit of Fig. 17 containing a capacitive reactance of 1000 ohms and an a-c ammeter. What will be the reading on the meter?

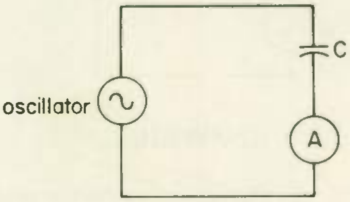

Fig. 17

3. You wish to find the output voltage of an audio generator, so you connect the generator to a capacitive reactance of 2000 ohms and measure a current of 15 ma through it. The voltage of your generator is (a) ____________. Does the current dissipate any heat in the reactance? (b) ________ The peak value of the 15-ma a-c current is (c) ________ milliamperes.

ANSWERS

1. (a) Opposition; (b) heat; (c) phase 2. 10 ma 3. (a) 30 volts; (b) no; (c) 21.2

12 FACTORS DETERMINING REACTANCE . . . Two factors determine the reactance of a capacitor: the size of the capacitance and the frequency of the applied voltage. A large capacitor draws a large charging and discharging current. The larger the capacitance, the more easily the capacitor can pass a-c current, just as the larger a conductor, the easier it will pass current. A large capacitor, then, has less reactance than a smaller one.

At high frequencies the charging and discharging of the capacitor takes place very rapidly and the capacitor passes a large current. The reactance of a capacitor is, then, less at higher frequencies. Thus, to decrease the reactance of a capacitor, you must increase the capacitance or increase the frequency of the applied voltage. The following formula gives the reactance of a capacitor:

$$Xc = \frac{1}{2\pi fC}$$

where f is the frequency of the applied voltage, in cycles per second, and C is the capacitance, in farads.

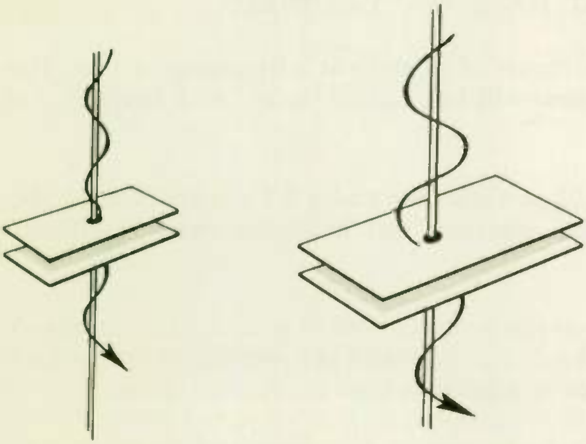

Fig. 18 A large capacitor passes more current than a small one passes.

It is important that you use the correct units when applying this formula. If, for example, f is given in megacycles, you must convert this value to cycles before using the formula. Similarly, C must be expressed in farads and not in microfarads or picofarads (micromicrofarads). To find the capacitance when the reactance is known, you should use the formula

$$C = \frac{1}{2\pi f Xc}$$

where the units must be observed as before.

EXAMPLE . . . What is the reactance of a 15- picofarad (micromicrofarad) capacitor at a frequency of 30 MHz (= 30 megaHertz = 30 megacycles = 30Mc)?

SOLUTION . . . First, convert to the proper units:

$$15 \text{ pf} = 15 \times 10^{-12} \text{ farads}$$

$$30 \text{ MHz} = 3 \times 10^{7} \text{ cps}$$

Second, apply the formula:

$$Xc = \frac{1}{2\pi fC} = \frac{1}{2 \times 3.14 \times 3 \times 10^{7} \times 15 \times 10^{-12}}$$

$$= \frac{1}{283 \times 10^{-5}} = 0.00353 \times 10^{5} = 353 \text{ ohms, } \mathit{ans.}$$

WHAT HAVE YOU LEARNED?

1. A capacitor has a reactance of 10 ohms at a frequency of 1 kc. The reactance of this capacitor will be *(higher) (lower)* at a frequency of 2 kc.

2. You are using a 0.01-μf capacitor and a 0.1-μf capacitor at the same frequency. Which capacitor will have the most reactance? ________________

3. A capacitor of 0.005-μf has a capacitance of (a) __________ farads. A frequency of 1000 kc is (b) ________ cycles per second. The reactance of the 0.005-μf capacitor at 1000 kc is then (c) ________ ohms.

4. You measure a certain capacitive reactance and find it is 100 ohms at a frequency of 1 kc. The value of the capacitor which has this reactance is (a) ____________ farads or (b) __________ microfarads.

5. You wish to couple a 100-cps audio oscillator to an audio amplifier. If a 100-μf capacitor is used, this capacitor will present __________ ohms of reactance at the audio signal.

6. Figure 19 shows the screen circuit of an audio amplifier tube. A bypass capacitor is used to short an unwanted a-c voltage to ground while leaving the d-c voltage unchanged. What must the value of the bypass capacitor be if it is to offer 10 ohms reactance to the unwanted a-c voltage at 100 kc? __________

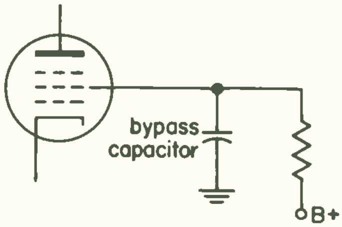

Fig. 19

ANSWERS

1. Lower 2. The 0.01 μf capacitor 3. (a) 5×10^{-9}; (b) 10^{6}; (c) 31.8
4. (a) 1.59×10^{-6}; (b) 1.59 5. 15.9 6. 0.159 μf

13 REACTANCE OF COMBINED CAPACITORS . . . When capacitors are connected in series or parallel, there are two ways to find the net reactance of the combination. One way is to first calculate the total capacitance of the combination and then find the reactance of the total capacitance. Since capacitors in parallel simply add, this method is simplest when dealing with capacitors in parallel.

EXAMPLE . . . Find the total reactance of a 15-pf (micromicrofarad) capacitor connected in parallel with a 10-pf capacitor at a frequency of 30 mc.

SOLUTION . . . First, find the total capacitance:

$$10 + 15 = 25 \text{ pf}$$

Next, convert to the proper units:

$$25 \text{ pf} = 25 \times 10^{-12} \text{ farads}$$

$$30 \text{ mc} = 3 \times 10^{7} \text{ cps}$$

Finally, apply the formula:

$$X_C = \frac{1}{2\pi f C} = \frac{1}{2 \times 3.14 \times 3 \times 10^{7} \times 25 \times 10^{-12}}$$

$$= \frac{1}{471 \times 10^{-5}} = 0.00212 \times 10^{5} = 212 \text{ ohms, } \textit{ans.}$$

The second way to calculate total reactance is to first calculate the reactance of each capacitor separately. Since reactance is measured in ohms and expresses opposition to current, *reactances in series or parallel can be treated like resistors.* Since finding the total capacitance of two capacitors in series is somewhat cumbersome, this second method is sometimes easier when finding the total reactance of series capacitors.

EXAMPLE ... What is the total reactance of a 10-pf capacitors in series with a 15-pf capacitor at 30 mc?

SOLUTION ... First, convert to the proper units:

$$10 \text{ pf} = 10^{-11} \text{ farads}$$
$$15 \text{ pf} = 1.5 \times 10^{-11} \text{ farads}$$
$$30 \text{ mc} = 3 \times 10^{7} \text{ cps}$$

Next, calculate the reactance of each capacitor:

$$\text{(a)}\ Xc = \frac{1}{2\pi fC} = \frac{1}{2 \times 3.14 \times 3 \times 10^{7} \times 10^{-11}}$$
$$= \frac{1}{18.8 \times 10^{4}}$$
$$= 530 \text{ ohms}$$

$$\text{(b)}\ Xc = \frac{1}{2\pi fC} = \frac{1}{2 \times 3.14 \times 3 \times 10^{7} \times 1.5 \times 10^{-11}}$$
$$= 353 \text{ ohms}$$

Finally, combine the reactances as if they were resistances:

$Xc_{total} = 530 + 353 = 883$ ohms, *ans.*

WHAT HAVE YOU LEARNED?

1. The total capacitance of a 0.01-μf capacitor and a 0.05-μf capacitor in parallel is (a) ________ microfarads. The reactance of this capacitance is (b) ________ ohms at 100 kc. The reactance of a 0.01-μf capacitor at 100 kc is (c) ________ ohms. The reactance of a 0.05-μf capacitor at 100 kc is (d) ________. Calculate the total reactance of the two capacitors in parallel by treating their reactances as if they were parallel resistances. The answer is (e) ________.

2. A capacitive reactance of 10 kilohms is connected in parallel with a capacitive reactance of 15 kilohms. A reactance of 25 kilohms is then connected in series with this parallel combination. The total reactance of the three capacitors connected in series-parallel in this manner is then ________ kilohms.

3. The input capacitance to a certain vacuum tube is 10 pf. Additional capacitance introduced by the circuit wiring appears in parallel with the input tube capacitance and amounts to 30-pf as in Fig. 20. At a frequency of 20 mc, the total reactance contributed by the tube and wiring is ____________ .

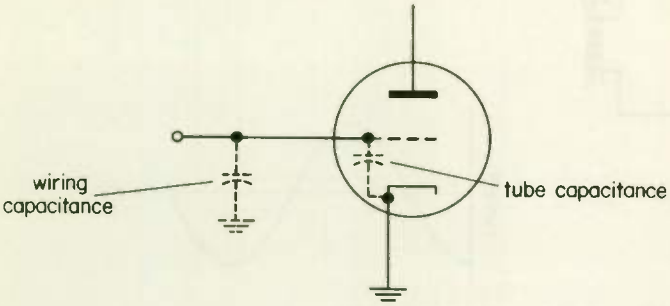

Fig. 20

ANSWERS

1. (a) 0.06; (b) 26.5; (c) 159; (d) 31.8 ohms; (e) 26.5 ohms
2. Treating reactances like resistances, the total reactance of 10 kilohms in parallel with 15 kilohms is

$$\frac{10 \text{ kilohms} \times 15 \text{ kilohms}}{10 \text{ kilohms} + 15 \text{ kilohms}}$$

This 6-kilohm reactance then appears in series with the 25-kilohm reactance. The total reactance is then

$$6 \text{ kilohms} + 25 \text{ kilohms} = 31 \text{ kilohms}$$

3. 199 ohms

14 CURRENT FLOW IN AN INDUCTANCE . . . An inductor is constructed of a number of turns of wire, usually wound in the shape of a coil. D-c current easily flows through an inductor because it is limited only by the resistance of the windings. When an a-c voltage is connected to an inductor, however, the inductor, like the capacitor, passes a-c current but offers some opposition to the current flow.

When passing a-c current, the action within an inductor is very similar to that in a capacitor. The current which flows through a capacitor charges and discharges the capacitor, that is, supplies electronic charge to and removes electronic charge from the capacitor plates. The current which flows through an inductor, on the other hand, supplies and removes a magnetic field which rises and falls around the turns of the coil.

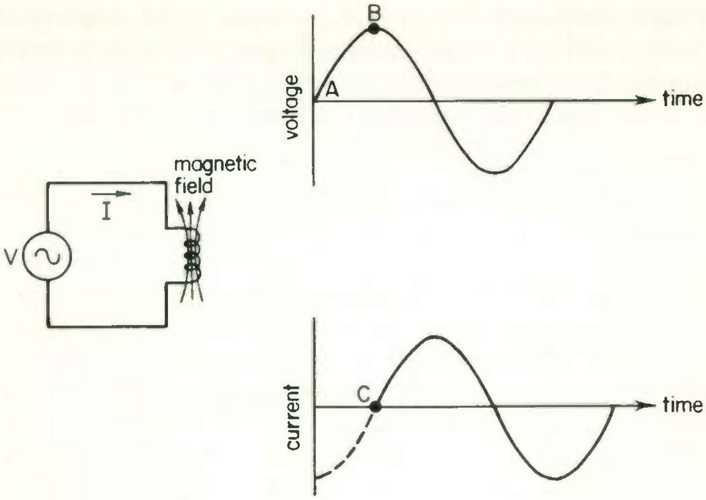

Fig. 21 **Voltage and current in an inductor.**

Figure 21 shows an a-c voltage which is applied to an inductor and the resulting a-c current which flows through it. When the voltage first rises from zero at point *A* to its peak value at point *B*, current also tries to flow in the coil. Because the current must build up a magnetic field around the coil as it rises, it cannot immediately follow the rise in the voltage. Thus the current does not begin to rise until point *C* on the current graph, one quarter-cycle after the voltage began its rise. As time goes on, the voltage and current continue to behave in this manner, the current lagging behind the voltage. The inductor offers opposition to a-c current because, as the current rises and falls, it must continually charge and discharge the magnetic field of the inductor.

WHAT HAVE YOU LEARNED?

1. As far as d-c is concerned, an inductor is just a length of wire. D-c current in an inductor is, then, limited only by the ____________ of the windings.

2. An inductor opposes the flow of a-c current because the current must supply to and remove energy from the inductor in the form of a (a) ____________ ____________ as it tries to rise and fall. For this reason, the voltage and current in an inductor are out of (b) ____________ and the current (c) *(lags) (leads)* the voltage.

3. In a(n) (a) *(capacitor) (inductor)* current is caused by a charging and discharging effect. In a(n) (b) *(capacitor) (inductor)* current is opposed by a charging and discharging effect.

ANSWERS

1. Resistance 2. Magnetic field; (b) phase; (c) lags 3. (a) Capacitor; (b) inductor

15

INDUCTIVE REACTANCE . . . Inductors, like capacitors, possess reactance. The voltage and current in an inductor are out of phase, and no heat or power is dissipated in an ideal inductor while it is in operation. This inductive reactance is measured in ohms, and its value depends upon the value of the inductance and the frequency of the applied voltage. The greater the inductance, the larger the magnetic field which the current is forced to supply and the more the current is opposed.

A coil having a large inductance must, then, also have a large inductive reactance. When the frequency of the applied voltage is very high, the current must build up and discharge the magnetic field of the inductor very rapidly. Greater opposition results, since the current must work much harder to supply the magnetic field at such a rapid rate. At higher frequencies, then, an inductor has a higher reactance.

You will note that inductive reactance behaves exactly opposite to capacitive reactance. Higher capacitance and higher frequency mean lower capacitive reactance, while higher inductance and higher frequency means higher inductive reactance. This contrasting behavior is due to the fact that the charging and discharging of the capacitor *causes* the current to flow, whereas the charging and discharging in an inductor *opposes* the flow of current. The symbol for inductive reactance is X_L. The formula for inductive reactance is

$$X_L = 2\pi f L$$

where L is the inductance, in *henrys,* and f is the frequency, in cycles per second.

To find the inductance when the inductive reactance is known, you should use the formula

$$\mathrm{L} = \frac{X_L}{2\pi f}$$

Once again, care must be taken to observe the proper units when using these formulas. Inductive reactance, like capacitive reactance, can be treated like resistance when calculating voltage and current.

Example... How much inductance do you need to present 13 kilohms reactance to an audio signal of 2 kHz (= 2 kiloHertz = 2 kilocycles = 2 kc)?

Solution... First, convert to proper units:

$$13 \text{ kilohms} = 13 \times 10^3 \text{ ohms}$$

$$2 \text{ kHz} = 2 \times 10^3 \text{ Hz}$$

Second, apply the formula:

$$L = \frac{X_L}{2\pi f} = \frac{13 \times 10^3}{2 \times 3.14 \times 2 \times 10^3} = \frac{13}{12.56} = 1.03 \text{ henrys, } \textit{ans.}$$

WHAT HAVE YOU LEARNED?

1. The voltage across an inductance is (a) ________ of phase with the current through it. An a-c current does not dissipate (b) ________ in an inductance. For these reasons and because inductors offer opposition to current flow, inductors possess (c) ________ just as capacitors do.

2. What is the inductive reactance of a 2.5-mh (millihenry) inductance at a frequency of 1 mc? (a) ________. This reactance is (b) *(higher) (lower)* at 10 mc. An inductance of 5 mh would have a (c) *(higher) (lower)* reactance than a 2.5-mh inductance would have.

3. You desire to obtain an inductor which will pass d-c while "choking" out an a-c voltage at 30 mc. Such an inductor is called a choke, since it is chosen to present a large reactance to the a-c voltage. How much inductance do you need for a choke coil of 100 kilohms reactance? ________.

4. You wish to check the calibration of an a-c milliameter. You connect 100 volts a-c to a standard inductive reactance of 2 kilohms and the meter to be calibrated. The meter should read ________ milliamperes.

ANSWERS

1. (a) Out; (b) power; (c) reactance
2. (a) 15.7 kilohms; (b) higher; (c) higher
3. $L = \dfrac{10^5 \text{ ohms}}{2 \times 3.14 \times 3 \times 10^7 \text{ cps}} = 0.530 \text{ mh}$
4. 50 ma

16 REACTANCE OF COMBINED INDUCTORS . . . Just as for capacitors, you have two ways of calculating the total reactance of inductors in series and parallel. You can first calculate the total inductance of the combination and then find the reactance of the total inductance, or you can, instead, find the reactance of each inductance separately and combine these separate reactances as if they were resistors. For inductors in either series or parallel, the simplest method is to find the total inductance first, since only one multiplication by $2\pi f$ is then required.

EXAMPLE . . . What is the reactance of a 3-henry and a 5-henry inductor connected in series at 1 kc?

SOLUTION . . . First, find the total inductance:

$$3 + 5 = 8 \text{ henrys}$$

Second, convert to the proper units:

$$1 \text{ kc} = 10^3 \text{ cps}$$

Third, apply the proper formula:

$$\begin{aligned} X_{L\ total} = 2\pi fL &= 2 \times 3.14 \times 10^3 \times 8 \\ &= 50.2 \times 10^3 \text{ ohms} \\ &= 50.2 \text{ kilohms, } ans. \end{aligned}$$

WHAT HAVE YOU LEARNED?

1. You come across, in an r-f filter, a 5-mh inductor and a 12-mh inductor in parallel. The total inductance of this combination is (a) ________ millihenrys. The reactance of this total inductance is (b) ________ kilohms at 10 mc.

2. You now wish to check the calculations of Problem 1 by first finding the reactances of each inductance separately and then combining the two reactances to find the total reactance. The reactance of a 5-mh inductor at 10 mc is (a) ________ kilohms. The reactance of a 12-mh inductor at 10 mc is (b) ________ kilohms. By calculating the total reactance of the two inductors in parallel by treating their reactances as if they were parallel resistances, you obtain (c) ________ kilohms.

3. Inductors are often used in the plate circuits of audio amplifiers, as shown in Fig. 22. The reactance of the inductors provides a load across which the a-c voltage amplified by the tube is developed. Ther a-c current flows out of the tube and through the reactance, thereb

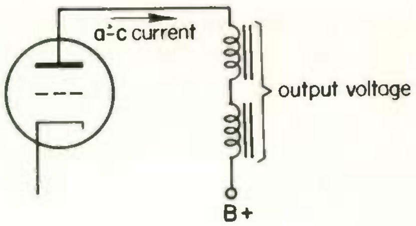

Fig. 22

producing the output voltage of the stage. How much output voltage is developed across a 3-henry and a 5-henry inductor in series if a 3000-cps a-c current of 2 ma flows through them? __________.

ANSWERS

1. (a) 3.53; (b) 222 2. (a) 314; (b) 754; (c) 222 kilohms
3. Total reactance = 151 kilohms 2 ma × 151 kilohms = 302 volts

17 PHASE SHIFT IN CAPACITORS AND INDUCTORS . . . Figure 23(a) shows, on the same graph, the voltage applied to an inductor and the current flowing through it. In the same way, the voltage and current associated with a capacitor are shown on the graph of Fig. 23(b). As previously discussed, a phase shift between current and voltage occurs in both a capacitor and an inductor. From the graphs you can see that this phase shift is 90° in both cases because the peak of the voltage always occurs when the current is zero.

When the voltage rises in the inductor, the current lags behind because it must produce a magnetic field. Thus, for an inductor, the current lags the voltage by 90°. Since a capacitor behaves in an opposite manner from an inductor, the current in a capacitor leads the voltage by 90°. It is easy to remember in which case the current is leading or lagging. Just remember that the current lags in an inductor because it must always be producing a magnetic field and that capacitors behave in an opposite manner from inductors.

When capacitors and inductors are used for coupling purposes, the phase shift between current and voltage does not play an important role. For example, Fig. 24 shows a capacitor used to couple an a-c voltage to the grid of a vacuum tube. The capacitor *C* is so chosen that its reactance is very small, perhaps a few ohms, while the grid resistor R_g is very large, on the order of a megohm. Although the voltage and current in the capacitor are 90° out of phase, the reactance of the capacitor is so small that it is almost a short circuit to the a-c and the phase shift has almost no effect on the circuit. The

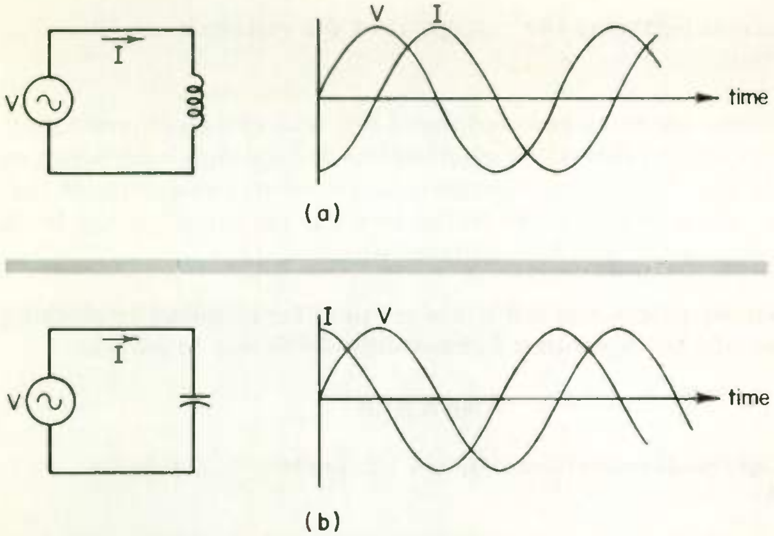

(a)

(b)

Fig. 23 Voltage and current in an inductor and a capacitor.

a-c input voltage then appears unchanged across R_g, as it should. The overall phase shift caused by a coupling capacitor is usually small and unimportant.

WHAT HAVE YOU LEARNED?

1. In an inductor, current (a) ________ the voltage because it must produce a magnetic field as it rises and falls. Capacitors (b) *(do) (do not)* behave like inductors as far as phase is concerned. Thus in a capacitor, the current (c) ________ the voltage. In both cases the phase shift is (d) ______ degrees.

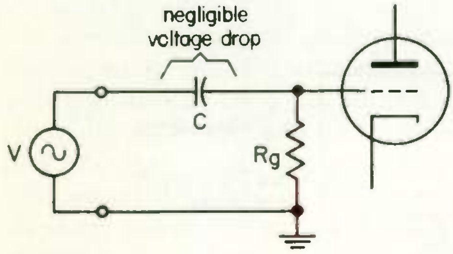

Fig. 24 Phase difference in a capacitor has no effect since its reactance is so small.

2. If current is lagging the voltage, then the voltage is __________ the current.

3. You come across an enclosed metal box with two leads coming out of it. You wish to determine whether the box contains a capacitor or inductor. By means of oscilloscope measurements, you determine that when a voltage is connected to the box, the resulting voltage leads the current by 90°. The box contains a(n) ____________.

4. When capacitors and inductors are used for coupling or blocking purposes, the voltage-current phase shift *(is) (is not)* important.

ANSWERS

1. (a) Lags; (b) do not; (c) leads; (d) 90   2. Leading   3. Inductor
4. Is not

18 IMPEDANCE . . . Resistors, inductive reactances, and capacitive reactances can all be connected together in some combination as shown in Fig. 25. This combination will offer some total opposition to the flow of current, because it is made up of resistances and reactances which individually oppose current. The *impedance* of an a-c circuit is, then, the total opposition to current due to resistors, inductors, and capacitors together.

As with reactance and resistance, impedance is measured in ohms and can be treated like resistance when calculating voltages and currents. For example, if the circuit of Fig. 25 had an impedance of 20 ohms and a voltage of 100 volts was being applied to the circuit, then the current which would flow would be 100 volts ÷ 20 ohms = 5 amp.

In calculating impedance, reactances of different types cannot be combined in the usual manner, owing to the different voltage current

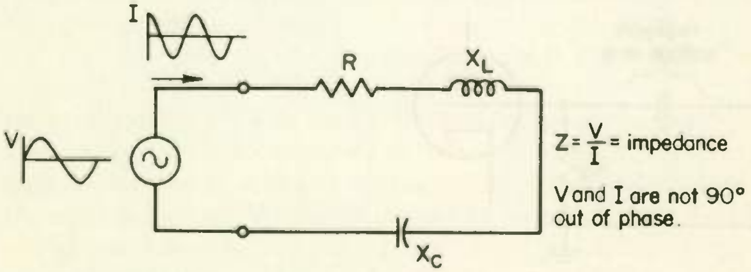

Fig. 25 An *RLC* circuit has impedance instead of resistance or reactance.

phase relationships involved. In Fig. 25, for example, you cannot merely add the resistance, capacitive reactance, and inductive reactance together to obtain the impedance of the circuit. Formulas for calculating the impedance of a-c circuits will be given in later lessons.

WHAT HAVE YOU LEARNED?

1. Two capacitive reactances in series or parallel may be treated like (a) ________________ for the purpose of calculating the total reactance. Two inductive reactances in series or parallel may be treated like (b) ________________ for the purpose of calculating the total reactance. However, an inductive reactance in series or parallel with a capacitive reactance, or a resistance in series or parallel with a capacitive or inductive reactance, (c) *(can) (cannot)* be treated as resistances. In this case the opposition to current is called (d) ________________ instead of resistance or reactance and some phase shift other than 90° exists between current and voltage.

2. Impedance is the total ________________ to current flow due to the combined opposition offered by resistors, capacitors, and inductors connected together.

ANSWERS

1. (a) Resistors; (b) resistors; (c) cannot; (d) impedance 2. Opposition

19 PULSATING CURRENTS . . . A current or voltage that continuously varies in value but does not change direction is called a *pulsating voltage* or *current.* The graph of such a wave is shown in Fig. 26. The wave varies continuously within the range of a maximum of 50 ma and a minimum of 10 ma. It never becomes negative in value. Pulsating waves are very common in electronics. The plate current of a vacuum tube and the collector current of a transistor are pulsating currents when a signal is being amplified.

A pulsating voltage (or current) is equivalent to a d-c voltage (or current) and an a-c voltage (or current) in the same conductor. Figure 27 shows how the wave of Fig. 26 is equal to the sum of two waves. One wave is a steady d-c wave of 30 ma amplitude. The other wave is an a-c wave riding on the d-c wave, and it has a peak-to-peak amplitude of $50 - 10 = 40$ ma. To see clearly the a-c wave, compare the a-c component of Fig. 27 with an ordinary a-c wave, such as the one

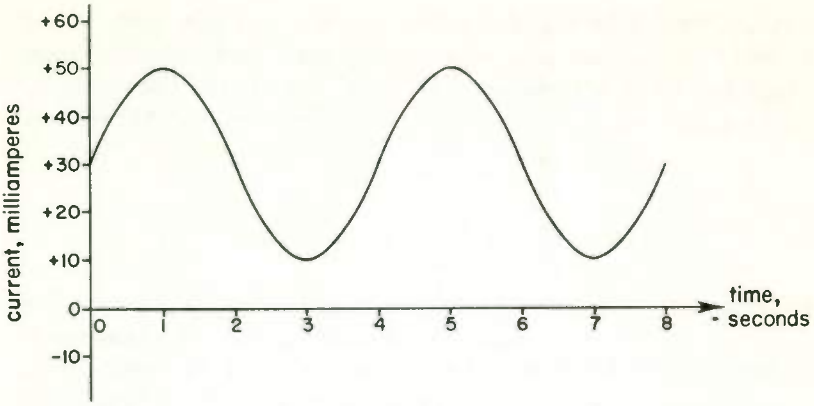

Fig. 26 Graph of a pulsating wave.

shown in Fig. 4. If the d-c component in Fig. 27 is thought of as the zero-amplitude horizontal reference line of Fig. 4, the identical general form of the two waves is apparent.

20 PULSATING WAVE = A-C WAVE + D-C WAVE . . . Since a pulsating wave is equivalent to an a-c wave and a d-c wave combined, we should be able to form a pulsating wave by adding an a-c wave to a d-c wave, much as the number 12 can be formed by adding its equivalent components 7 and 5.

Figure 28 shows how to combine the output from an a-c voltage source with the output from a d-c voltage source to produce a pulsat-

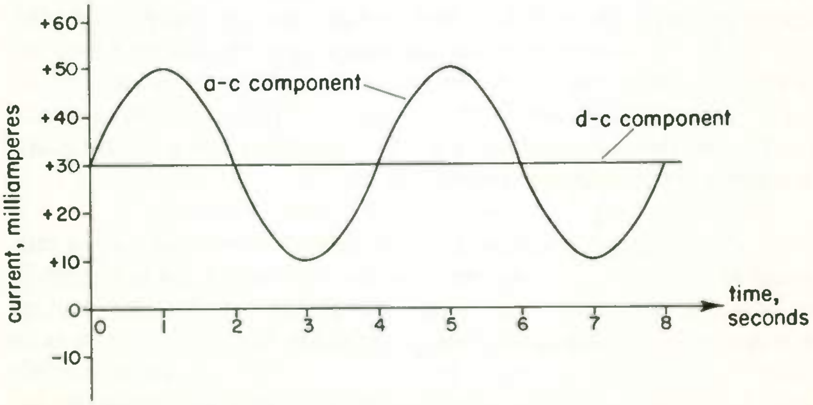

Fig. 27 A pulsating wave is equivalent to a d-c wave and an a-c wave combined.

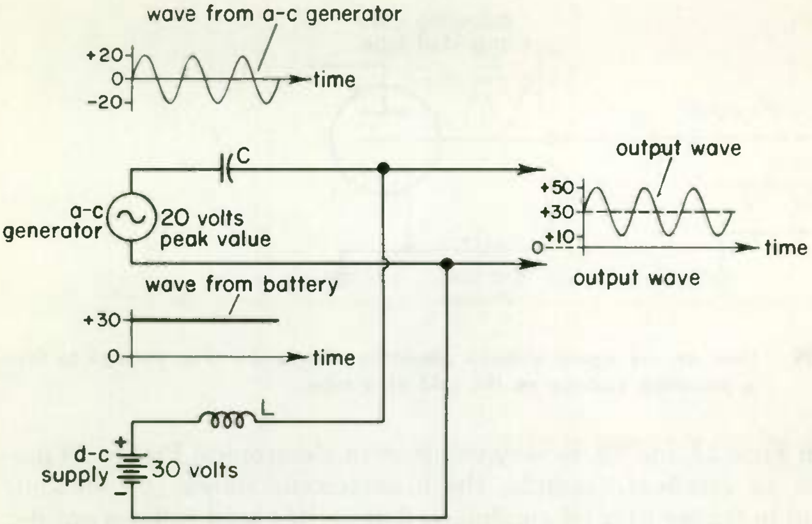

Fig. 28

ing voltage. Notice that the average height of the output wave (the d-c component) is 30 volts, the same as the d-c supply voltage, and that the output voltage varies above and below its average value by the amount of the peak voltage (20 volts) of the a-c generator. That is, the maximum output voltage is 30 + 20 = 50 volts, and the minimum is 30 − 20 = 10 volts.

Since capacitor *C* passes a-c and blocks d-c, its purpose is to keep the 30-volt d-c supply out of the a-c generator while allowing the a-c generator voltage to get to the output. Similarly, inductor *L* keeps the a-c generator voltage out of the d-c supply while allowing the d-c supply voltage to pass to the circuit output. This is because an inductor passes d-c but blocks a-c.

Figure 29 shows the circuitry of Fig. 28 applied to a practical situation. The proper operation of most vacuum tubes requires that a pulsating voltage be applied to the grid of the tube. In the circuit shown in Fig. 29 the a-c signal coming into the grid is combined with a d-c bias voltage to produce a pulsating voltage, as shown, on the grid of the tube. Notice carefully that the circuit is identical to that in Fig. 28, with the a-c signal replacing the a-c generator.

The use of inductors and capacitors to keep a-c and d-c currents and voltages from entering parts of a circuit where they are not wanted,

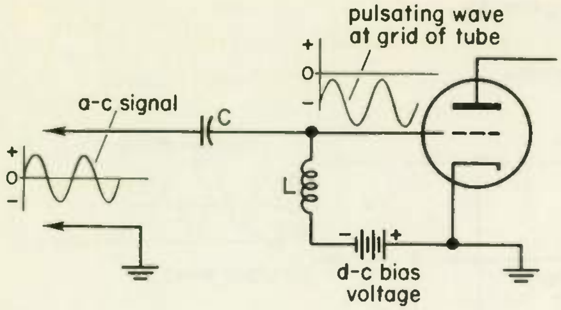

Fig. 29 **How an a-c signal voltage combines with a d-c bias voltage to form a pulsating voltage on the grid of a tube.**

as in Figs. 28 and 29, is very common in electronics. Figure 29 provides an excellent example; the arrangement shown is commonly found in transmitter r-f amplifiers. A capacitor used to keep out d-c, such as *C* in Figs. 28 and 29, is often called a *blocking capacitor,* since it blocks d-c from entering. An inductor used to keep out a-c is often called a *choke,* since it "chokes" off the a-c current or voltage.

WHAT HAVE YOU LEARNED?

1. Capacitors and inductors can be used to add a-c and d-c waves. When an a-c current is added to a d-c current, the result is a (a) __________ current in which the a-c appears to be riding on the (b) ________ level.

2. The values of the d-c and a-c components of a pulsating voltage can easily be obtained from a graph. Figure 30 shows a 30-volt a-c wave added to a 70-volt d-c level. The maximum value that this pulsating voltage takes on is (a) __________ volts. The minimum value that this pulsating voltage reaches is (b) __________. Note that you could have obtained these values by merely adding and subtracting the a-c and the d-c without looking at the graph:

$$\text{maximum value} = 30 + 70 = 100 \text{ volts}$$

$$\text{minimum value} = 70 - 30 = 40 \text{ volts}$$

3. If in Fig. 29 the a-c signal has a peak amplitude of 4 volts and the d-c bias voltage is -7 volts, the most negative value of the pulsating

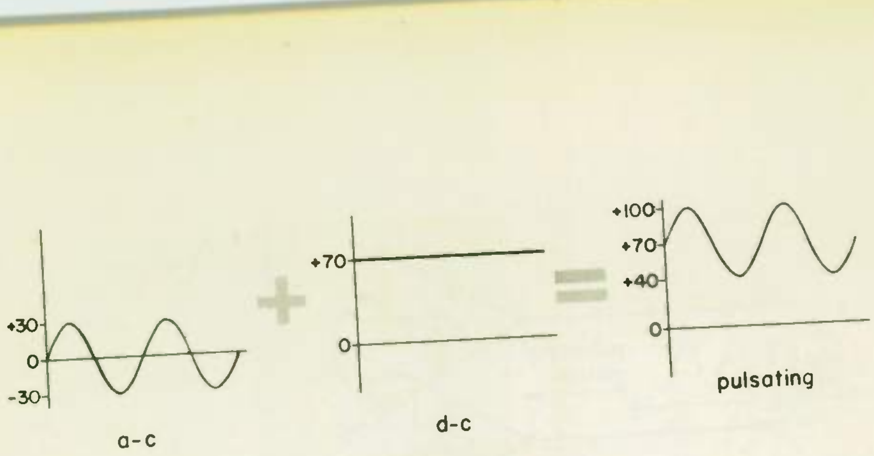

Fig. 30

voltage on the grid is (a) ________ volts and the least negative value is (b) ________ volts.

4. If in Fig. 29 the a-c signal has a peak value of 7 volts and the d-c bias voltage is −7 volts, the most negative value of the pulsating voltage on the grid is (a) ________ volts and the least negative value is (b) ________ volts. If the a-c signal is now increased to 8 volts peak value, the most negative value of the pulsating voltage on the grid is (c) ________ volts and the corresponding minimum value is (d) ________ volts. The voltage on the grid is no longer always of (e) ________ polarity.

5. Under some conditions a vacuum tube will not operate properly if the grid becomes positive at any time. With a bias voltage of 7 volts in Fig. 29, the peak value that the a-c signal could have and the grid never be positive would be (a) ________ volts. The maximum permissible rms (root-mean-square) value of the signal voltage would be (b) ________ volts.

ANSWERS

1. (a) Pulsating; (b) d-c 2. (a) 100 volts; (b) 40 volts
3. (a) −11; (b) −3 4. (a) −14; (b) 0; (c) −15; (d) +1; (e) negative
5. (a) 7 (b) 4.95 . . . Effective (rms) voltage equals 0.707 × peak.

21 SEPARATING A PULSATING WAVE INTO COMPONENTS . . . We have seen how a capacitor and an inductor can be used to combine a d-c wave and an a-c wave to form a pulsating wave. Conversely, a pulsating wave can be separated into its d-c and a-c components by the use of inductors and capacitors to "steer" the two components into separate paths. Figure 31 shows a suitable circuit. Here a voltage that pulsates between 10 and 50 volts and has an average of 30 volts is fed into the circuit. Since this wave has the same values as the output wave of Fig. 28, the amplitudes of the output a-c and d-c

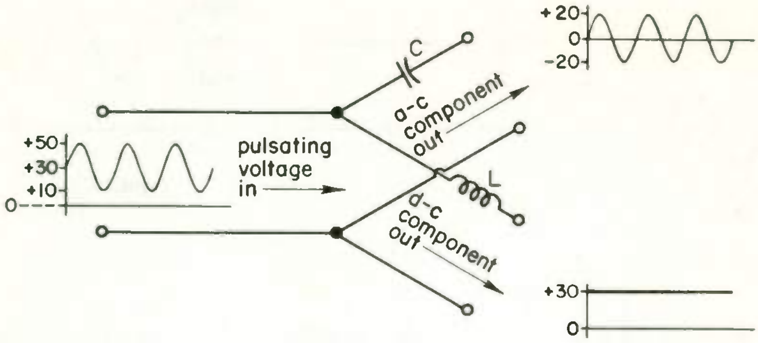

Fig. 31 Separating a pulsating voltage into its a-c and d-c components.

components is the same as the amplitudes of the input a-c and d-c components in Fig. 28.

In Fig. 31 the choke *L* passes the d-c component but blocks out the a-c component. The capacitor *C* passes the a-c component but blocks out the d-c component.

A good example of a circuit in which a-c and d-c currents are combined and carried on the same line as a pulsating current, later to be separated into d-c and a-c components, is the remote control of a radio transmitter. It is often desirable to place a radio transmitter at a location far removed from the audio to be broadcast. Besides the a-c audio signal, a d-c voltage, which is used to turn the transmitter on and off, must be brought to the transmitter over the same line.

Figure 32 shows the circuit which is used. The audio to be broadcast is applied to the line through the coupling capacitor C_1. The reactance of C_1 is chosen very small so that it easily passes the audio current. The inductor L_1 has a large reactance and prevents the a-c from being shorted to ground through the d-c supply. In this way almost all the audio current flows into the line. Similarly, the d-c current easily flows into the line through choke L_1 but is prevented from damaging the audio input source because of the presence of C_1, which blocks its flow.

The resulting voltage on the line is a pulsating voltage. It has a d-c component for keying the transmitter and an a-c component containing the audio to be broadcast. At the output end of the line these two components must be separated and routed to their respective circuits. The a-c current cannot flow through L_2, but it easily flows through C_2

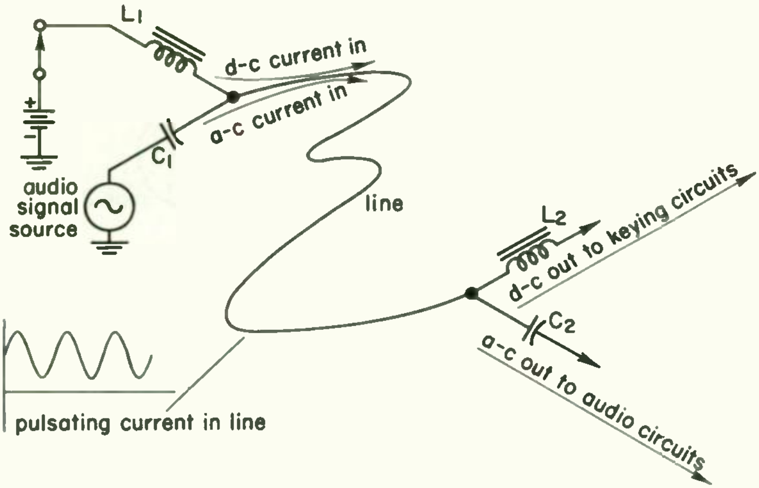

Fig. 32 Remote transmitter control circuit using a-c and d-c in the same line.

to the audio circuits of the transmitter. The d-c current is blocked by C_2 and routed, instead, through L_2 to the proper keying circuits.

Always think of a pulsating current as two currents — one a-c and one d-c—flowing in the same circuit. You can then trace the path of each current separately, without any consideration of the other current. For example, to trace the a-c signal in Fig. 32, we can start at the signal source and trace through C_1. The signal can't go through L_1 because of the blocking action of the choke, so it follows along the line to the branching point at the end, where it goes through the branch with C_2, since the choke in the other branch blocks it. The d-c current can be similarly analyzed.

WHAT HAVE YOU LEARNED?

1. In Fig 33, a pulsating current comes out of the plate of tube 1. This pulsating current is separated into its d-c and a-c components by (a) ________ and ________. The d-c component goes to (b) ____________________ ____________________, and the a-c component goes to (c) ____________________ ________________. The 250-volt d-c is kept off the grid of tube 2 by (d) ________; and (e) ________ keeps the a-c component from flowing through the power supply, so that it will have to go to (f) ____________________

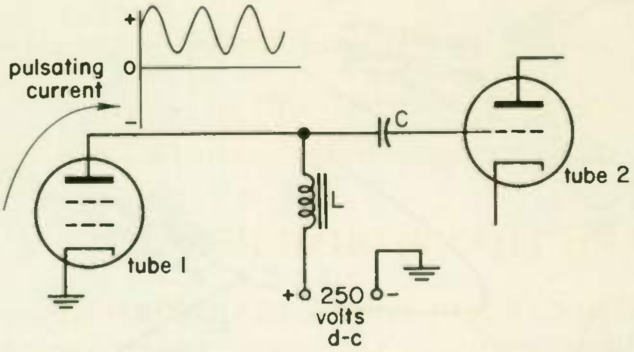

Fig. 33

2. If a blocking capacitor is to pass the a-c component of a pulsating wave with only slight loss, its reactance must be (a) ____________ at the frequency of a-c component. At a low frequency a (b) ____________ capacitor is needed than at a higher frequency. If a choke coil is to block out most of the a-c component of a pulsating wave, its reactance must be (c) ____________ at the frequency of the a-c component. At a low frequency a (d) ____________ choke is needed than at a higher frequency.

3. You wish to use a capacitor to block d-c and easily pass an audio a-c voltage. If this capacitor is to have a small reactance of 1 ohm at 1 kc, its capacitance must be ____________ .

4. You desire to use an inductance to pass d-c and choke out a 1-kc a-c voltage. If this choke is to have a reactance of 10 kilohms, its inductance must be ____________ .

5. At r-f frequencies a choke coil need not have a large inductance; 2.5 mh is a common value for an r-f choke. How much reactance does this choke have at 10 mc? ____________

6. Suppose in Fig. 32 that the insulation of the line was such that it could withstand only 200 volts peak value before it arced over and shorted. Would it be safe to use a keying voltage of 150 volts d-c and a peak audio voltage of 60 volts? ____________

7. While the purpose of L_1 in Fig. 32 is to block a-c, it will not do so completely. If the a-c voltage on the line is 50 volts, how much a-c current will get through L_1 if L_1 has a reactance of 10 kilohms? ________

ANSWERS

1. (a) *L* (and) *C;* (b) the 250-volt d-c power supply; (c) the grid of tube 2; (d) *C;* (e) *L;* (f) the grid of tube 2
2. (a) Low; (b) larger; (c) high; (d) larger
3. 159 μf 4. 1.59 henrys 5. 157 kilohms
6. No . . . The peak voltage on the line would be 150 + 60 = 210 volts.
7. 5 ma

POWER TRANSFORMERS

22 CONSTRUCTION OF POWER TRANSFORMERS . . . Transformers are used to step up or step down a-c voltages. Power transformers and audio transformers are constructed of two coils, or inductors, wound on the same iron core, as shown in Fig. 34. The voltage to be stepped up or down is applied to coil L_p, which is called the primary coil of the transformer.

When an a-c voltage V_p is connected to the primary coil, a current I_p flows through the coil. This current creates a magnetic field which passes around the iron core and through the secondary coil L_s. As the magnetic field due to the primary rises and falls with the continual rising and falling of the a-c current, it cuts across the windings of the secondary coil and induces a voltage V_s across the coil.

If the secondary coil has more turns than the primary, then the voltage will have been stepped up and the output voltage V_s will be greater than the input voltage V_p. On the other hand, if L_s has fewer turns than L_p, then V_s will be less than V_p and the voltage will be stepped down.

The number of turns in the secondary divided by the number of turns in the primary is called the turns ratio *T* of the transformer:

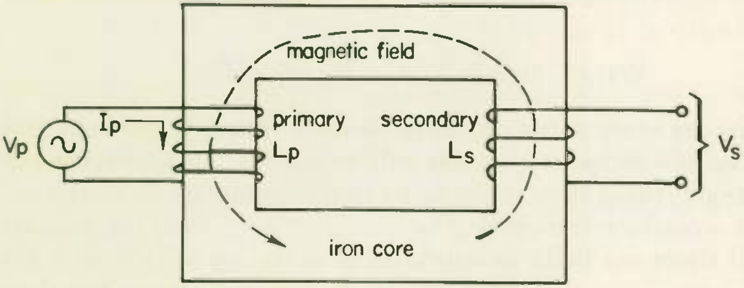

Fig. 34 A power transformer.

$$T = \frac{N_s}{N_p}^{*}$$

If there are 200 turns on the primary and 1000 turns on the secondary, the turns ratio is 1000 ÷ 200 = 5, or 5:1. If there are 1000 turns on the primary and 200 turns on the secondary, the turns ratio is $200 \div 1000 = \frac{1}{5}$, or 1/5, or 1:5, or 0.2.

The turns ratio tells you how much the voltage is stepped up or down. To find the output voltage, multiply the input voltage by the turns ratio:

$$V_s = TV_p$$

For example, if a 100-volt a-c voltage is applied to the primary coil of a transformer having a turns ratio of 5, then the output voltage is 5 times as large as the input voltage of 100 volts, or $V_s = 5 \times 100 =$ 500 volts. If the turns ratio is 1/5, the output voltage is one-fifth as large as the input voltage and

$$V_s = \frac{1}{5} \times 100 = 20 \text{ volts.}$$

EXAMPLE . . . Find the secondary voltage of a transformer with 1200 turns on the primary and 150 turns on the secondary if the primary voltage is 220 volts.

SOLUTION . . . First find the turns ratio:

$$T = \frac{N_s}{N_p} = \frac{150}{1200} = 0.125$$

Now multiply primary voltage by turns ratio to get secondary voltage:

$$V_s = 0.125 \times 220 = 27.5 \text{ volts, } \textit{ans.}$$

WHAT HAVE YOU LEARNED?

1. If there are more turns on the secondary than the primary of a transformer, the secondary voltage will be (a) __________ than the primary voltage. If there are fewer turns in the secondary than the primary, the secondary voltage will be (b) __________ than the primary voltage. If there are twice as many turns in the secondary as in the

---

*Some authors define turn ratio as the number of turns on the primary divided by the number of turns on the secondary, or $T = \frac{Np}{Ns}$. We will not use this definition.

primary, the secondary voltage will be (c) __________ the primary voltage, and if there are half as many turns on the secondary, the secondary voltage will be (d) __________ the primary voltage.

2. A transformer with 200 turns on the primary and 600 turns on the secondary has a turns ratio of (a) __________. A transformer with 600 turns on the primary and 200 turns on the secondary will have a turns ratio of (b) __________. If the primary voltage is 300 volts for both transformers, the first transformer will have a secondary voltage of (c) ________ volts and the second transformer will have a secondary voltage of (d) __________ volts.

3. Find the secondary voltage of a transformer with 800 turns on the primary and 3000 turns on the secondary when the primary voltage is 120 volts. ____________

4. You need a transformer to reduce the 110 volts of the power lines to 50 volts. Since such a transformer is not readily obtainable, you decide to wind it yourself by using the core of an old burned-out transformer. You wind 500 turns for the primary. For the secondary you should wind ________ turns.

ANSWERS

1. (a) More; (b) lower; (c) twice; (d) half
2. (a) 3, or 3:1; (b) $\frac{1}{3}$, 0.333, or 1:3; (c) 900; (d) 100
3. 450 volts . . . The turns ratio is 3000/800 = 3.75. Multiplying the primary voltage by the turns ratio, 3.75 × 120 = 450 volts.
4. 227 . . . To reduce 110 volts to 50 volts, a turns ratio of 50/110 = 0.455 is required. 500 × 0.455 = 227 turns

23 CURRENTS IN A TRANSFORMER . . . In Fig. 35 is shown a power transformer raising the 110-volt line voltage to a level suitable for a high-voltage rectifier. When the transformer is supplying current to a load, as in this case, the current I_s which flows out of the secondary into the load is related to the current I_p which flows in the primary by the formula

$$I_s = \frac{I_p}{T}$$

Thus, to find the current in the secondary, you must *divide* the current in the primary by the turns ratio. If 3 amp flows into a trans-

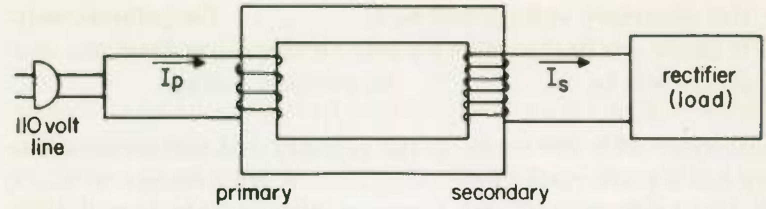

Fig. 35 **Currents in a transformer.**

former having a turns ratio of 5, then the output current will be $I_s = \frac{3}{5} = 0.6$ amp.

Recall that in finding the output voltage you *multiplied* the input voltage by the turns ratio. Therefore, current and voltage behave oppositely in a transformer: *If the voltage is stepped up, the current is stepped down and vice versa.*

Besides telling you how much the voltage is stepped up, the turns ratio tells you how much the current is stepped down. Another way to state this fact is to say the ratio of secondary voltage to primary voltage is equal to the turns ratio and the ratio of primary current to secondary current is equal to the turns ratio:

$$\frac{V_s}{V_p} = T \qquad \frac{I_p}{I_s} = T$$

With these formulas you can calculate the turns ratio when you know the input and output voltages or currents.

WHAT HAVE YOU LEARNED?

1. Currents behave (a) _______________ to voltages in a transformer. If the voltage is stepped up, the current is stepped (b) _____________. To find the secondary current from the primary current, you (c) __________ the primary current by the turns ratio.

2. You find that a certain transformer has a turns ratio of 10. How much current will flow in the secondary coil if the primary has 2 amp flowing through it? (a) ______________ If this transformer has 100 volts across its primary, the secondary voltage is (b) ___________ volts.

3. The power company steps up the voltage of its generators from 15,000 to 90,000 volts for transmission along high-tension wires. The

turns ratio of the transformer needed is (a) ________. This transformer has (b) *(more) (less)* turns on the secondary than on the primary.

4. You desire to step up an audio voltage from 20 volts to 100 volts. You will need a transformer with more turns on the secondary than the primary. The turns ratio of the transformer must be (a) ________. If 4 ma flows in the primary, (b) ________ milliamperes flows in the secondary.

ANSWERS

1. (a) Opposite; (b) down; (c) divide 2. (a) 200 ma; (b) 1000
3. (a) 6; (b) more 4. (a) 5; (b) 0.8

24 PRACTICAL CONSIDERATIONS . . . A transformer is an a-c device and will not work with d-c. The reason is that the magnetic field in the core must rise and fall across the turns of the secondary coil in order to induce a secondary voltage. If a d-c voltage is applied to the primary of a transformer, the d-c source will see only the resistance of the windings and a large d-c current will flow and will probably damage the transformer.

When an a-c voltage is applied to the transformer, however, the reactance of the primary winding is sufficiently large that only a moderate a-c current flows. The reactance of the primary windings, as you know, depends upon the frequency at which the transformer is being used. If a transformer is used at a frequency significantly lower than the frequency for which it was designed, the primary windings will not have enough reactance and an excessive a-c current will flow.

An iron core is used in a transformer to provide a low-reluctance path for the magnetic field encircling the primary and secondary coils. If the magnetic field did not see a complete iron path between the primary and secondary coils, the operation of the transformer would be seriously affected, because it would be much harder to produce a strong magnetic field around the secondary coil.

Figure 36(a) shows the cross section of a core made out of a solid piece of iron. You can see that such a core can be thought of as being made up of a large number of one-turn coils set right next to each other. If this core were used in a transformer, each of these one-turn coils would act as a shorted secondary winding and would have a current induced in it. Such currents, called *eddy currents,* heat up the core and cause a large power loss.

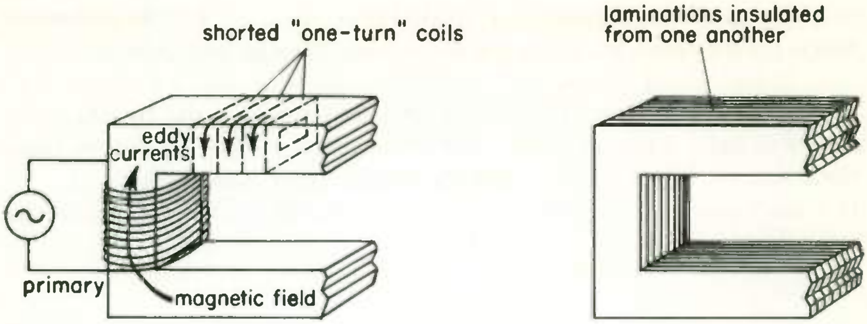

(a) solid iron core with eddy current losses

(b) laminated core to minimize eddy currents

Fig. 36 **Eddy currents in a transformer.**

To minimize the eddy current effect, transformers are not made of a single piece of iron. Instead, they are constructed of a number of thin sheets, or laminations, insulated from one another as shown in Fig. 36(b). These laminations break up the "one-turn coils" and greatly reduce the eddy current losses.

Hysteresis is another cause of power loss in transformers. Every time the magnetic field reverses in the iron core (which it does twice each cycle), the molecules of the iron shift about. The friction associated with the turning of the molecules heats up the core. The resulting power loss is called *hysteresis loss.*

WHAT HAVE YOU LEARNED?

1. A transformer will not work with d-c because the magnetic field in the core must (a) ____________ with time. If d-c is connected to a transformer, excessive (b) ____________ will flow and damage the transformer.

2. A transformer should not be used with a-c below its rated frequency because the windings do not possess enough ______________ to limit the a-c current.

3. An iron core is used in a power transformer to provide a low-(a) ______________ path between primary and secondary coils for the (b) ____________ ____________.

4. If you wound a transformer on a solid-iron core, the transformer would become hot when you used it because of the (a) __________ currents which would flow in the core. To prevent this heating, you would make the core of (b) ____________ and insulate them from one another.

ANSWERS

1. (a) Vary; (b) current 2. Reactance
3. (a) Reluctance; (b) magnetic field 4. (a) Eddy; (b) laminations

25 SKIN EFFECT . . . At radio frequencies there is a tendency for current to travel near the surface of the conductor, the central portion of the conductor being little used. This phenomenon is called skin effect. The result of skin effect is to increase the resistance of the conductor at radio frequencies to a value that is often much higher than the d-c resistance of the conductor. The part of the conductor not used might as well not be there (except that it provides mechanical strength). The conductor is therefore equivalent electrically to a much smaller d-c conductor, where the entire cross-sectional area is used. Hence, the higher resistance at radio frequencies.

Skin effect is caused by the inductance of the conductor. Although we usually associate inductance with coils, a straight wire will have some inductance. This inductance is not evenly spread throughout the area of the wire, but is greatest at the center, and very little at the surface of the conductor. The reactance of the inductance near the center of the conductor is high enough at radio frequencies to cause nearly all the current to move near the surface, where the opposition to current flow is much lower. The inductance in an ordinary conductor is so low that its reactance at low frequencies is negligible. Consequently, the resistance of a conductor at audio frequencies is essentially the same as its d-c resistance.

Where it is desired to keep resistance at radio frequencies (called r-f resistance) as low as practical, large diameter conductors are used. To save metal and reduce weight, copper tubing can be used.

Don't confuse r-f resistance with impedance. Impedance is the total opposition to current flow, consisting of reactance and resistance. R-f resistance is only the resistive part of the opposition.

ALTERNATING-CURRENT CIRCUITS

EXAMINATION

Circle the number of the correct answer for each question that follows. When you are finished, transfer the answers to the answer sheet by putting X's in the proper squares. When the graded answer sheet is returned to you, correct in this book any questions you may have missed. By doing so, you will have a record of the correct answers to all questions for review purposes.

1. In Fig. 37 indicate which graph represents a sine wave of voltage leading a sine wave of current by 90°.
   [✓ (1)] (2) (3) (4)

2. In Fig. 37 indicate which graph represents a sine wave of current leading a sine wave of voltage by 90°.
   (1) (2) [✓ (3)] (4)

3. In Fig. 37 indicate which graph represents a sine wave of voltage displaced from a sine wave of current by 180°.
   (1) [✓ (2)] (3) (4)

4. In Fig. 37 indicate which graph represents a sine wave of voltage in phase with a sine wave of current.
   (1) (2) (3) [✓ (4)]

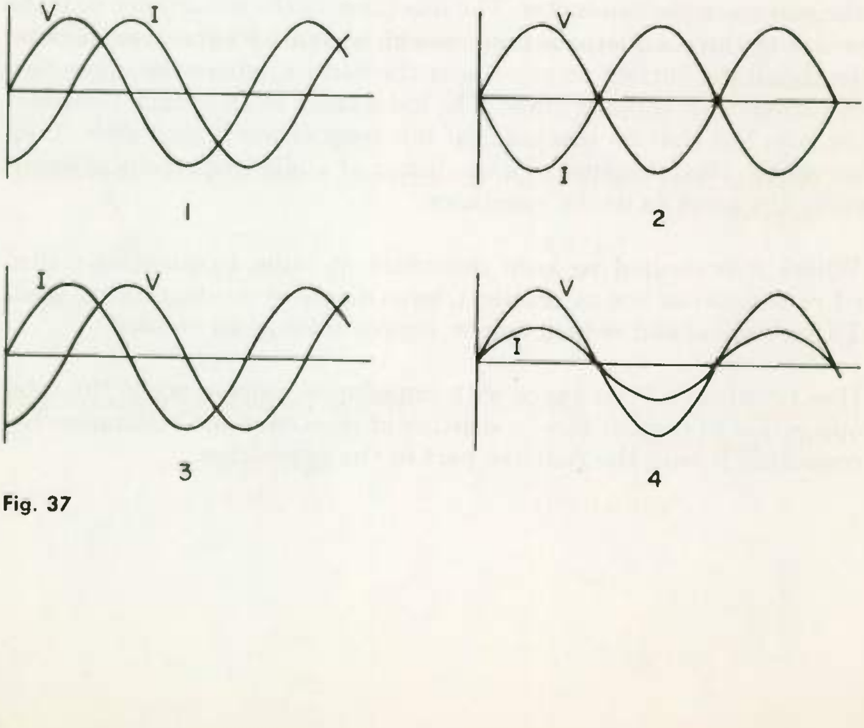

Fig. 37

5. What is the meaning of phase difference?
(1) the difference in amplitude between two waves of the same frequency
(2) the difference in wavelength between two waves of the same frequency
[✓ (3)] the difference in time by which one wave leads or lags another wave
(4) the difference in frequency between two sine waves

6. What units are used to measure phase difference?
(1) ohms [✓ (3)] degrees
(2) amperes (4) feet
(5) gilberts

7. For power calculating purposes the value of an a-c wave to use is the
(1) average value (3) peak value
[✓ (2)] effective value (4) pulsating value

8. What is meant by the statement that one wave leads another wave?
(1) the two waves are in phase
[✓ (2)] the two waves are out of phase, the leading wave occurring before the other wave
(3) the two waves are out of phase, the leading wave occurring after the other wave
(4) the two waves are out of phase, both waves occurring simultaneously.

9. What is the ratio between the effective value of an a-c wave and its peak value?
(1) 1.414:1 (3) 0.892:1
(2) 0.637:1 (4) 0.902:1
[✓ (5)] 0.707:1

10. What is the ratio between the average value of an a-c wave and its peak value?
(1) 1:1 (3) 0.707:1
[✓ (2)] 0.637:1 (4) 0.902:1

11. What is the ratio between the average value of an a-c wave and its effective value?
    (1) 1:1
    (2) 0.707:1
    [✓ (3) 0.902:1]
    (4) 1.414:1

12. What is the ratio between the peak value of an a-c wave and its effective value?
    [✓ (1) 1.414:1]
    (2) 0.637:1
    (3) 1.329:1
    (4) 1:1

13. What unit is used in expressing the a-c impedance of a circuit?
    [✓ (1) ohms]
    (2) henrys
    (3) amperes
    (4) farads
    (5) joules

14. What is the reactance value of a capacitor of 0.005 μf at a frequency of 1000 kc?
    (1) 3.18 ohms
    (2) 13.5 ohms
    (3) 73.1 ohms
    (4) 318 ohms
    [✓ (5) 31.8 ohms]

15. What is the capacitance of a capacitor having a reactance of 100 ohms at 10 mc?
    (1) 0.032 μf
    (2) 111 pf
    [✓ (3) 159 pf]
    (4) 314 μf
    (5) 0.159 μf

16. What is the reactance value of a capacitor of 20 μf at a frequency of 1000 cps?
    (1) 79.6 ohms
    (2) 15.9 ohms
    (3) 33.8 ohms
    [✓ (4) 7.96 ohms]
    (5) 31.8 ohms

17. What is the capacitance of a capacitor having a reactance of 1000 ohms at a frequency of 30 mc?
    (1) 11.6 pf
    (2) 53 pf
    (3) 17.2 pf
    [✓ (4) 5.31 pf]
    (5) 16 μf

18. What is the purpose of an r-f coupling capacitor?
    (1) to pass d-c while blocking a-c
    [✓ (2) to pass a-c while blocking d-c]
    (3) to block d-c and a-c
    (4) to pass a-c and d-c

19. What is the purpose of an r-f choke?
    [✓ (1)] to pass d-c while blocking a-c
    (2) to pass a-c while blocking d-c
    (3) to block d-c and a-c
    (4) to pass a-c and d-c

20. What is the current and voltage relationship when inductive reactance predominates in an a-c circuit?
    [✓ (1)] voltage leads the current by 90°
    (2) voltage lags the current by 90°
    (3) voltage and current are in phase
    (4) current leads the voltage by 180°
    (5) currents lags the voltage by 180°

21. What is the current and voltage relationship when capacitive reactance predominates in an a-c circuit?
    (1) voltage leads the current by 90°
    [✓ (2)] voltage lags the current by 90°
    (3) voltage and current are in phase
    (4) current leads the voltage by 180°
    (5) current lags the voltage by 180°

22. What is the current and voltage relationship when a-c is applied to a resistor?
    (1) voltage leads the current by 90°
    (2) voltage lags the current by 90°
    [✓ (3)] voltage and current are in phase
    (4) current leads the voltage by 180°
    (5) current lags the voltage by 180°

23. Neglecting distributed capacitance, what is the reactance of a 5-mh choke coil at a frequency of 1000 kc?
    (1) 22.8 kilohms
    (2) 396 ohms
    [✓ (3)] 31.4 kilohms
    (4) 7.9 megohms
    (5) 3.14 kilohms

24. What is the inductance of an inductor having a reactance of 200 kilohms at a frequency of 2000 kc?
(1) 1.59 mh
(2) 34.7 mh
(3) 1.59 henrys
(4) 74.8 mh
[✓ (5) 15.9 mh]

25. What is the reactance of a 5-henry choke at a frequency of 3 kc?
(1) 144 ohms
(2) 29.6 megohms
(3) 13.7 kilohms
(4) 47.6 kilohms
[✓ (5) 94.2 kilohms]

26. What is the inductance of an inductor having a reactance of 700 kilohms at a frequency of 400 kc?
(1) 144.9 mh
(2) 7.99 henrys
[✓ (3) 279 mh]
(4) 15.9 mh
(5) 3.67 mh

27. Why are laminated iron cores used in audio and power transformers?
(1) to increase the frequency response
(2) to minimize hysteresis losses
(3) to increase the strength of the transformer
[✓ (4) to minimize eddy current losses]
(5) to minimize stray capacitance

28. How are eddy current losses minimized in audio and power transformers?
[✓ (1) by using laminated-iron cores]
(2) by minimizing stray capacitance
(3) by using hard-steel cores
(4) by increasing the turns ratio
(5) by decreasing the turns ratio

29. What are eddy currents in a transformer?
(1) currents induced in the secondary winding
(2) currents self-induced in the primary winding
[✓ (3)] currents induced in the core
(4) currents due to the leakage flux

30. What would be the effect of connecting 110 volts at 25 cycles to the primary of a transformer rated at 110 volts and 60 cycles?
(1) higher efficiency
[✓ (2)] overheating due to increased primary current
(3) lower efficiency
(4) increased secondary current
(5) increased inductive reactance of primary winding

31. What would be the effect if direct current were applied to the primary of an a-c transformer?
(1) higher efficiency
[✓ (2)] excessive d-c current would flow in the primary and damage the transformer
(3) large d-c voltage in the secondary coil
(4) lower efficiency
(5) transformer would behave normally

32. Why may a transformer not be used with direct current?
(1) transformer cores are not large enough
[✓ (2)] a time-varying magnetic field must be used to induce the secondary voltage
(3) the transformer draws too much current when connected to an a-c source
(4) an a-c current must be used to make the reactance of the primary coil large

33. Why may a transformer not be used at a frequency lower than its rated frequency?
(1) primary windings have too much reactance at a lower frequency
[✓ (2)] primary windings have too little reactance at a lower frequency
(3) primary windings have the same reactance at a lower frequency
(4) primary windings have too little distributed capacitance at a lower frequency

34. If a power transformer, having a voltage step-up ratio of 5:1 is placed under load, what will be the approximate ratio of secondary to primary current?

[✓ (1) 1:5]
(2) 1:10
(3) 10:1
(4) 5:1
(5) 7:1

35. If 100 volts is applied to the primary of a power transformer having three times as many secondary turns as primary, what is the output voltage?

(1) 250 volts
(2) 900 volts
(3) 33.3 volts
[✓ (4) 300 volts]
(5) 90 volts

36. If 10 volts is applied to the primary of a power transformer and the secondary voltage is then found to be 100 volts, what is the ratio of secondary turns to primary?

(1) 1:1
(2) 1:10
[✓ (3) 10:1]
(4) 100:1
(5) 1:100

37. If 3 amp flows in the primary of a power transformer having a voltage step-up ratio of 3:1, what is the current which flows in the secondary?

(1) 9 amp
(2) 6 amp
(3) 0.3 amp
[✓ (4) 1 amp]
(5) 10 amp

38. If 4 amp flows into the primary of a power transformer and 16 amp flows in the secondary, what is the ratio of secondary turns to primary?

[✓ (1) 1:4, or 0.25]
(2) 8:1, or 8
(3) 4:1, or 4
(4) 1:8, or 0.125
(5) 16:4, or 4

39. What is meant by the impedance of an a-c circuit?

(1) the opposition to current flow due to heat losses
(2) the opposition to current flow due to phase shift
[✓ (3) the total opposition to current flow due to resistance and reactance]
(4) the phase shift between current and voltage

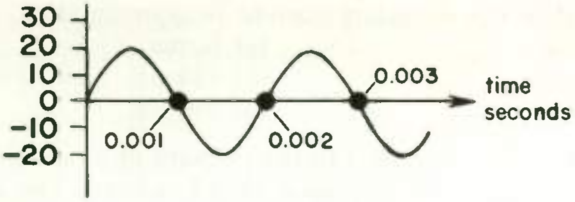

Fig. 38

40. What is the peak-to-peak value of the sinusoidal wave shown in Fig. 38?
   - (1) 14.1 volt
   - (2) 20 volt
   - (3) 28.2 volt
   - [✓ (4)] 40 volt
   - (5) 56.5 volt

41. What is the frequency of the wave in Fig. 38?
   - (1) 200 cps
   - (2) 300 cps
   - (3) 333 cps
   - [✓ (4)] 500 cps
   - (5) 1000 cps
   - (6) 2000 cps
   - (7) None of the above

42. An electric heating pad is normally operated from a 150-volt peak value sine wave power source. If the operating voltage were to be changed to d-c, what d-c voltage should be used if the heating effect is to be the same as when a-c is used?
   - (1) 95.5 volts
   - [✓ (2)] 106 volts
   - (3) 150 volts
   - (4) 212 volts
   - (5) None of the above

43. You are told that a certain a-c power line has a voltage of 230 volts. What is the effective value of the power line voltage?
   - (1) 146 volts
   - (2) 163 volts
   - (3) 207 volts
   - [✓ (4)] 230 volts
   - (5) None of the above.

44. If the frequency of an a-c voltage source is 50 cps, how many alternations occur per second?
   - [✓ (1)] 100
   - (2) 75
   - [✓ (3)] 50
   - (4) 25

45. You find an unmarked transformer in a piece of electronic equipment. You find that when you put 2 volts a-c on the primary, 12 volts appear across the secondary. When the primary current is

30 ma, then the secondary current is approximately

(1) 2.5 ma.
[✓ (2) 5 ma.]
(3) 30 ma.
(4) 60 ma.
(5) 180 ma.
(6) 360 ma.

46. If 110 volts a-c is applied to the primary of a power transformer having a voltage step-up ratio of 3:1, what is the approximate power output from the secondary if the primary current is 400 ma?

(1) 1.2 watts
(2) 7.33 watts
(3) 14.7 watts
[✓ (4) 44 watts]
(5) 132 watts
(6) 330 watts
(7) 396 watts

47. A capacitor used to pass the a-c signal to some other part of the circuit while blocking d-c should have a low reactance to the a-c being passed so that the signal loss caused by the capacitor will be slight. What is the minimum size capacitor you can use if you don't want the reactance to be over 20 ohms and the signal being passed has a frequency of 3 mc?

[✓ (1) 0.00265 μf]
(2) 0.00265pf
(3) 2.65 pf
(4) 265 pf

48. A total capacitance of 0.01 μf is across the output terminals of an audio generator. How much current is the capacitance drawing from the generator when the generator is set at 1 kc with an output of 3 volts?

[✓ (1) 189 μa]
(2) 529 μa
(3) 942 μa
(4) 15.9 ma
(5) 159 ma

49. A choke used to pass d-c while blocking a-c must have a high reactance at the frequency of the a-c if the a-c is to be effectively blocked. What minimum inductance must an r-f choke have in order to present a value of not less than 150 kilohms to an r-f current at 7 mc?

(1) 3.41 μh
(2) 34.1 μh
(3) 341 μh
[✓ (4) 3.41 mh]
(5) 3.41 h

50. If a choke used to block a-c while passing d-c is to do its job perfectly, the a-c current through the choke would be zero. This would require a choke with infinite reactance, which is impossible. What current actually passes through the choke of Question 49 if the a-c voltage to be blocked is 8 volts?

[✓ (1) 53.3 μa]
(2) 236 μa
(3) 2.36 ma
(4) 18.8 ma

End of Exam

Notes

"If you're made of the right material,
a hard fall results only in a high bounce."

COPPER WIRE TABLE

Standard Annealed Copper Wire, Solid

American Wire Gage (B.&S.). English Units

Gage number	Diameter, mils	Cross-section		Ohms per 1,000 ft.		Ohms per mile	Pounds per 1,000 ft.
		Circular mils	Square inches	25°C. (=77°F.)	65°C. (=149°F.)	25°C. (=77°F.)	
0000	460.0	212,000.0	0.166	0.0500	0.0577	0.264	641.0
000	410.0	168,000.0	0.132	0.0630	0.0727	0.333	508.0
00	365.0	133,000.0	0.105	0.0795	0.0917	0.420	403.0
0	325.0	106,000.0	0.0829	0.100	0.116	0.528	319.0
1	289.0	83,700.0	0.0657	0.126	0.146	0.665	253.0
2	258.0	66,400.0	0.0521	0.159	0.184	0.839	201.0
3	229.0	52,600.0	0.0413	0.201	0.232	1.061	159.0
4	204.0	41,700.0	0.0328	0.253	0.292	1.335	126.0
5	182.0	33,100.0	0.0260	0.319	0.369	1.685	100.0
6	162.0	26,300.0	0.0206	0.403	0.465	2.13	79.5
7	144.0	20,800.0	0.0164	0.508	0.586	2.68	63.0
8	128.0	16,500.0	0.0130	0.641	0.739	3.38	50.0
9	114.0	13,100.0	0.0103	0.808	0.932	4.27	39.6
10	102.0	10,400.0	0.00815	1.02	1.18	5.38	31.4
11	91.0	8,230.0	0.00647	1.28	1.48	6.75	24.9
12	81.0	6,530.0	0.00513	1.62	1.87	8.55	19.8
13	72.0	5,180.0	0.00407	2.04	2.36	10.77	15.7
14	64.0	4,110.0	0.00323	2.58	2.97	13.62	12.4
15	57.0	3,260.0	0.00256	3.25	3.75	17.16	9.86
16	51.0	2,580.0	0.00203	4.09	4.73	21.6	7.82
17	45.0	2,050.0	0.00161	5.16	5.96	27.2	6.20
18	40.0	1,620.0	0.00128	6.51	7.51	34.4	4.92
19	36.0	1,290.0	0.00101	8.21	9.48	43.3	3.90
20	32.0	1,020.0	0.000802	10.4	11.9	54.9	3.09
21	28.5	810.0	0.000636	13.1	15.1	69.1	2.45
22	25.3	642.0	0.000505	16.5	19.0	87.1	1.94
23	22.6	509.0	0.000400	20.8	24.0	109.8	1.54
24	20.1	404.0	0.000317	26.2	30.2	138.3	1.22
25	17.9	320.0	0.000252	33.0	38.1	174.1	0.970
26	15.9	254.0	0.000200	41.6	48.0	220.0	0.769
27	14.2	202.0	0.000158	52.5	60.6	277.0	0.610
28	12.6	160.0	0.000126	66.2	76.4	350.0	0.484
29	11.3	127.0	0.0000995	83.4	96.3	440.0	0.384
30	10.0	101.0	0.0000789	105.0	121.0	554.0	0.304
31	8.9	79.7	0.0000626	133.0	153.0	702.0	0.241
32	8.0	63.2	0.0000496	167.0	193.0	882.0	0.191
33	7.1	50.1	0.0000394	211.0	243.0	1,114.0	0.152
34	6.3	39.8	0.0000312	266.0	307.0	1,404.0	0.120
35	5.6	31.5	0.0000248	335.0	387.0	1,769.0	0.0954
36	5.0	25.0	0.0000196	423.0	488.0	2,230.0	0.0757
37	4.5	19.8	0.0000156	533.0	616.0	2,810.0	0.0600
38	4.0	15.7	0.0000123	673.0	776.0	3,550.0	0.0476
39	3.5	12.5	0.0000098	848.0	979.0	4,480.0	0.0377
40	3.1	9.9	0.0000078	1,070.0	1,230.0	5,650.0	0.0299

From *A Course in Electrical Engineering, Vol. I, Direct Currents*, by Chester L. Dawes.
Copyright 1937. McGraw-Hill Book Company, Inc. Used by permission.

CLEVELAND INSTITUTE OF ELECTRONICS / CLEVELAND, OHIO

electronics

CLEVELAND INSTITUTE OF ELECTRONICS / CLEVELAND, OHIO

Operation of Tubes and Transistors

2404-3

An **AUTO-PROGRAMMED**™ Lesson

ABOUT THE AUTHOR

We chose Mr. Gillie to write this lesson because of his outstanding success in teaching and writing about tube and transistor theory. His clearly-worded text books are used in schools throughout the country. Among his best known books are *Transistors, Electrical Principles of Electronics,* and *Principles of Electron Devices.*

Mr. Gillie is a member of the Department of Vocational-Technical Education at Rutgers — The State University of New Jersey.

Mr. Gillie attended Central Connecticut State College and the University of Connecticut where he received his Bachelor of Science and Master of Arts degrees respectively. He has earned his Ed.D. from the State University of New York at Buffalo.

During World War II, Mr. Gillie served in the U.S. Navy where he was engaged in special assignments in anti-submarine warfare involving high-frequency direction finding.

This is an AUTO-PROGRAMMED* Lesson exclusive with the Cleveland Institute of Electronics. It is your assurance of the finest in technical education and training.

*Trademark

Accredited by the Accrediting Commission of the National Home Study Council

The Accrediting Commission has been approved by the U.S. Office of Education as a "nationally recognized accrediting agency".

CLEVELAND INSTITUTE OF ELECTRONICS

Operation of Tubes and Transistors

By ANGELO C. GILLIE, Ed.D.
Rutgers – The State University

2404-3

In this lesson you will learn...

LIBRARY of CONGRESS CATALOG CARD NUMBER: 63-12731

Frontispiece: *One of the steps in making tubes. With the aid of this rotary "sealex" machine, an employee seals a tube mount to its glass envelope.* Photo: Courtesy, Sylvania Electric Products, Inc.

THIRD EDITION Third Revised Printing January 1967.

A chat with your instructor

In this lesson you will learn about the operation of triode, tetrode, and pentode vacuum tubes. Also included in this lesson is a discussion of the basic operation of the gas diode and gas triode.

The first topics make a distinction between the two basic types of electron emitters: the directly heated and the indirectly heated cathodes. The type of heater supply and how it is connected into the circuit have much to do with the type of emitter utilized in the tube. The first topics are devoted to the distinction between the heater supplies and what precautions must be taken when constructing circuits for them.

The relationship between plate current and plate voltage is established for both the triode and pentode with the help of the volt-ampere characteristics. In this way, you will easily see the differences between these two types of vacuum tube. The electrical characteristics of these tubes are then developed, and you are shown how they are useful.

In this lesson you will learn how the grid bias voltage supply E_{cc} is replaced with bias circuits which do not require separate voltage supplies. Since this is what is done so often in actual practice, you will learn how such bias circuits can be calculated.

After learning about the limitations of the triode vacuum tube, you will study the tetrode and then the pentode. Since the pentode requires the use of an additional positive voltage, you are shown how this additional voltage can be obtained without using another supply. A special pentode which is in common use, called the beam power tube, is treated separately.

The gas tube and its advantages over the vacuum tube are pointed out for you in the last topics of this lesson. The special provisions which must be made for using the gas diode in a battery-charging circuit are discussed and illustrated. This lesson closes with a discussion of the electrical characteristics of the thyratron tube, which is a gas triode.

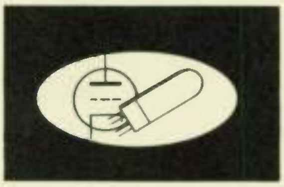

Operation of Vacuum Tubes

DIRECTLY AND INDIRECTLY HEATED CATHODES

As you will recall from preceding lessons, a vacuum tube employs a heated cathode to emit the electrons which constitute the controllable flow of current through the tube. Two basic types of cathode construction are employed: the *directly heated cathode* and the *indirectly heated cathode*. In the case of the directly heated cathode, the electron-emitting surface is heated directly by the passage of current through it, whereas in the indirectly heated cathode, the electron-emitting surface is brought up to proper temperature by the heat radiated from a nearby separate heater element.

1 THE DIRECTLY HEATED CATHODE . . . The directly heated cathode—or filament, as it is often called—is illustrated in Fig. 1. In operation, current passed through this filament causes it to become heated to the temperature at which it will emit free electrons. The filament may be made of pure tungsten, thoriated tungsten, or metals coated with metallic oxides.

Pure-tungsten filaments must be raised to the highest temperature of the three for proper electron emission, and they are therefore the least economical from the standpoint of heating power. (The higher the operating temperature, the greater the heating current required.) However, when operated at proper temperature, pure-tungsten electrodes give high electron emission.

Thoriated-tungsten filament temperature is not as high as the pure-tungsten temperature, but a relatively large amount of heating power is still required.

The oxide-coated filament requires the least amount of heating power, and it is the most popular type, being used extensively in tubes designed for battery-operated equipment.

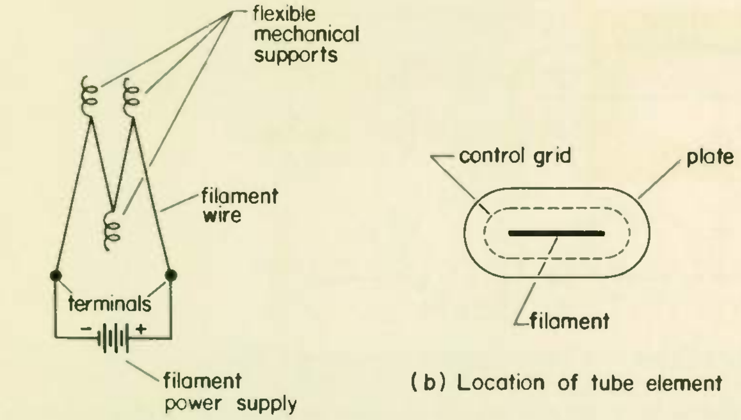

(b) Location of tube element

(a) Filament construction

Fig. 1 **Directly heated cathode.**

WHAT HAVE YOU LEARNED?

1. Why are thoriated-tungsten filaments not used in tubes intended for battery-operated equipment?

2. What is the advantage of using tubes with pure-tungsten filaments in transmitters?

ANSWERS

1. They are operated at higher temperatures than oxide-coated filaments, and thus they require more heater current. Low current consumption is important in battery-operated equipment.
2. They can handle high values of plate current because of the high rate of electron emission from this type of filament.

2 PROPER OPERATION OF DIRECTLY HEATED CATHODES . . . Figure 2 illustrates a simplified vacuum-tube amplifier using a tube with a directly heated cathode. The solid arrows indicate the plate current path through the tube, and the filament-heating current path is represented by the outline arrows.

The emission of electrons from the filament, which constitutes the plate current, will take place throughout the filament surface, but not evenly. The left side of the filament, which is connected to the negative side of the filament supply (and is therefore more negative with respect to the plate) will emit more of the plate current than

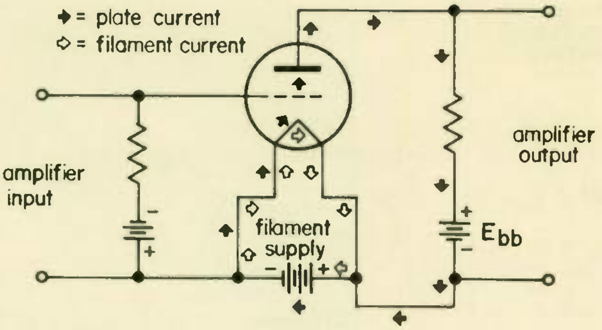

Fig. 2 **Flow of plate and filament current through tube filament.**

will the right side. For that reason the active coating on the filament wears away unevenly, wearing the fastest nearest the negative filament supply terminal. Therefore, in high-power transmitting tubes, it is recommended that the filament terminal connections be periodically reversed when d-c is used for heater power. Tube life will thereby be extended.

The use of a-c rather than d-c for the filament supply is usually desirable because of its convenience and economy. Step-down transformers convert the common 117-volt or 230-volt line voltage to the desired filament voltage.

When an a-c filament supply is used, a certain amount of hum will be developed by the filament. This hum can be reduced to a minimum by connecting all the common or ground points in the circuits asso-

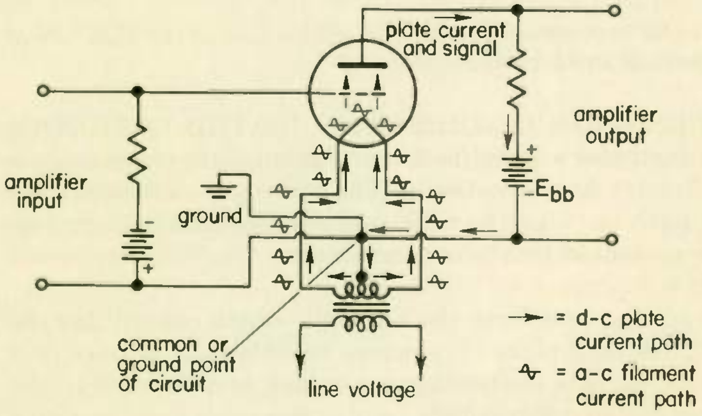

Fig. 3 **Use of filament transformer center tap as common or ground point of circuit.**

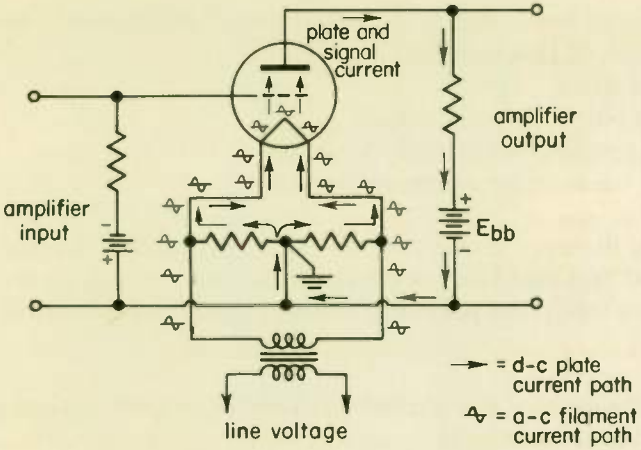

Fig. 4 Use of two resistors across filament transformer to establish common or ground point.

ciated with the tube to the center point of the filament transformer secondary winding as shown in Fig. 3. The "common or ground points" are the circuit return points for the plate voltage supply, grid input signal, etc. In most cases, the common or ground portion of the circuit is connected to the metal chassis upon which the circuit is assembled.

If the filament transformer secondary doesn't have a center tap, two equal-value resistors may be placed across the secondary. All of the circuit ground points are then connected to the junction of these two resistors. As indicated by the arrows in Fig. 4, the two resistors serve essentially the same purpose as a center tap, since they place the circuit ground midway between the two ends of the secondary winding just as the center tap does.

A special note of precaution is necessary here. The pairs of wire carrying the a-c heater current to the tubes should be twisted tightly together and dressed down close to the chassis to minimize their radiation of a-c fields which can induce hum into other parts of the circuit. This is especially important in audio amplifier equipment, which is particularly sensitive to radiated a-c fields.

WHAT HAVE YOU LEARNED?

1. An amplifier similar to that of Fig. 3 is brought to you with the

complaint of excessive hum. Which of the following defects would be the most likely cause of this hum?
(a) Twisted heater wires
(b) Filament leads pulled up from chassis
(c) Open filament transformer primary winding
(d) Open filament transformer secondary winding

2. You replace the filament transformer for an amplifier like the one shown in Fig. 3 and find that the secondary winding of the new transformer has no center tap. What provision would you make to substitute for the center tap?

3. Upon making the provision in Problem 2, to what would you connect all the circuit ground points?

4. State two precautions for the reduction of hum in an audio amplifier.

ANSWERS

1. (b) Filament leads pulled up from chassis.
2. Connect two equal resistors across the secondary winding.
3. To the junction of the two resistors.
4. (a) All circuit grounds should be connected to the center tap of the filament transformer secondary or to the junction of two resistors connected across the secondary. (b) The heater leads should be twisted together.

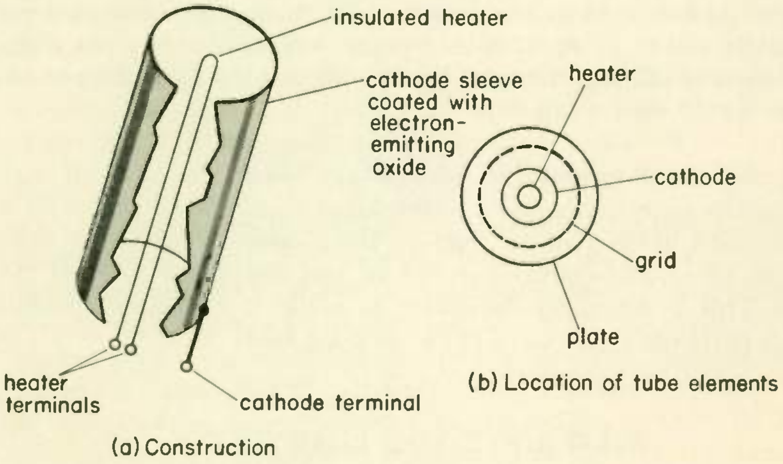

(a) Construction

(b) Location of tube elements

Fig. 5 **Indirectly heated cathode.**

3 THE INDIRECTLY HEATED CATHODE... Tubes with indirectly heated cathodes are nearly always designed for use with a-c heater current supplies. The construction of a typical indirectly heated cathode assembly is shown in Fig. 5.

Notice that the heater element is isolated completely from the cathode sleeve, which is coated with special oxide materials which readily emit electrons when heated. The heater temperature is raised by passing current through the heater; this in turn heats the cathode sleeve and its oxide coating. The heater serves no other purpose than to heat the cathode; it contributes nothing to the emission of electrons.

Since the heater is completely isolated from the active cathode, it may be heated by a source of a-c with little possibility of electrical interference such as hum.

Although oxide-coated indirectly heated cathodes are used extensively in receiving and low-power transmitting tubes, tungsten must be used for the cathodes in high-power tubes. The reason is that other materials do not emit electrons fast enough. It is not practical to obtain the high operating temperatures required for tungsten cathodes by indirect heating; consequently, high-power tubes use directly heated cathodes.

An important consideration in the use of any heated-cathode vacuum tube, especially high-power transmitting tubes, is that the filament or heater voltage must be maintained at the operating level specified by the manufacturer. If the applied voltage is below normal, the electron emission of the cathode will be reduced and the tube will not be capable of providing its rated power output. If the applied voltage is above normal, the life of the filament or heater—and hence the tube—will be shortened.

Oxide-coated indirectly heated cathodes and oxide-coated and thoriated-tungsten filaments gradually lose their electron-emissive qualities during use. Not too much can be done to reactivate the oxide-coated cathodes and filaments, but thoriated-tungsten filaments can often be restored to useful electron emission by applying a voltage approximately 30 per cent higher than their rated value for a period of from 20 to 30 min. This causes the spent coating to be boiled off and a fresh electron-emitting surface to be exposed. This *reactivation process* is occasionally applied to transmitting tubes, the maximum use of which is required for economic reasons.

WHAT HAVE YOU LEARNED?

1. Will a directly or indirectly heated cathode reach operating temperature the quickest?

2. The main purpose of the indirectly heated cathode is to reduce __________ when operated from an a-c supply.

3. Since indirect cathode heating is heating from a distance, a tube using indirect heating requires (a) *(more) (less)* heating power than a comparable directly heated tube. This being the case, tubes used in portable battery-operated equipment have (b) __________ heated cathodes.

ANSWERS

1. Directly heated . . . With indirect heating, the heater must first warm up, and then the radiated heat must heat the cathode.

2. Hum 3. (a) More; (b) directly

INTERRELATIONSHIP OF PLATE VOLTAGE, PLATE CURRENT, AND GRID VOLTAGE IN VACUUM TUBES

In this section we are going to examine the interrelationship of plate voltage, plate current, and grid voltage in the vacuum tube. The use of *characteristic curves* will be explained, as will be the important triode tube characteristics.

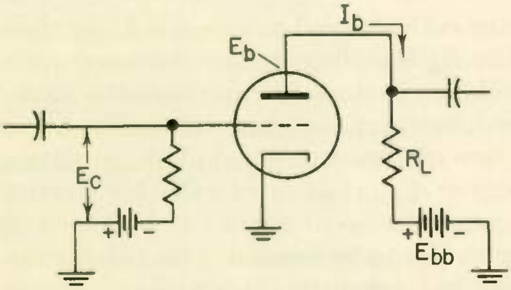

Fig. 6 Symbols used in descriptions of electronic circuits.

Before beginning, however, just a word about the designations used to indicate such quantities as plate current, plate voltage, and grid bias voltage. For convenience, designations such as I_b, E_b, and E_c are used. They should be considered a form of electronic shorthand which is used extensively in the description of circuits.

The symbols we are going to use in the following discussion are shown in Fig. 6, and they are defined as follows:

E_{bb} is the voltage of the d-c power supply used to furnish plate voltage to the tube.

E_b is the plate voltage, the d-c voltage measured between plate and cathode of the tube. Don't confuse plate voltage E_b with plate supply voltage E_{bb}. The former is frequently much less than the latter because of the voltage drop across the load resistance R_L.

E_c is the grid bias voltage, the d-c voltage measured between grid and cathode.

I_b is the plate current, the d-c current drawn by the plate of the tube.

NOTE: The symbol E_g is sometimes used for E_c; the symbol E_p for E_b, and the symbol I_p for I_b.

4 RELATIONSHIP BETWEEN PLATE VOLTAGE E_b AND PLATE CURRENT I_b IN TRIODE VACUUM TUBES... In the preceding lesson, you learned that the plate current I_b is controlled by the grid voltage E_c. As the grid voltage is made more negative, the plate current decreases; as the grid voltage is made less negative, the plate current increases. Also, the magnitude of the plate current depends on the value of plate voltage E_b as well as on the grid bias voltage E_c.

This interrelationship of plate voltage E_b, plate current I_b, and grid voltage E_c for a triode may be illustrated by means of a graph such as the one shown in Fig. 7. This graph of *characteristic curves* is very useful because it gives a complete picture of the interrelationship of the tube plate voltage E_b, plate current I_b, and grid voltage E_c at a glance.

Notice that the horizontal axis of the graph indicates increasing values of plate voltage E_b starting with 0 volts at the left edge. The vertical axis of the graph indicates increasing values of plate current I_b

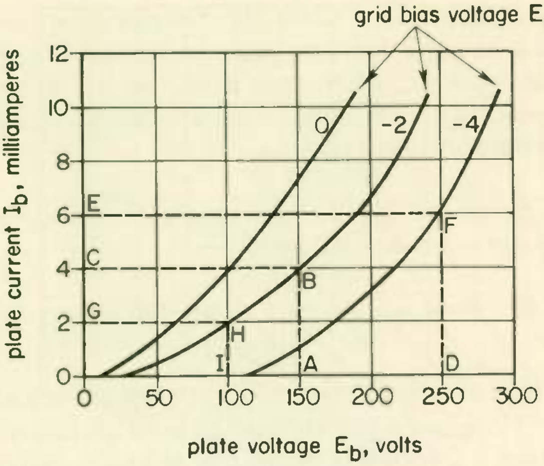

Fig. 7 Typical characteristic curves of a triode.

starting with 0 ma, at the bottom left edge. Control grid bias voltage E_c is plotted for 0, −2, and −4 volts.

Now let's take a look at how we can use this graph to determine various tube operating characteristics. As an example, let's say that a tube with the characteristics shown in Fig. 7 is operating with a plate voltage E_b of 150 volts and a grid voltage E_c of −2 volts. We want to determine the plate current I_b. First, we locate the 150-volt point on the horizontal axis, *A* in Fig. 7. From that point we move upward until we read −2 volts, point *B*. From there we move to the left until we reach the left edge of the graph, point *C*, and there we read the plate current I_b of 4 ma.

Again, let's say that we want to determine the proper grid bias voltage needed to operate the tube with a plate current of 6 ma when the plate voltage is 250 volts. Referring again to Fig. 7, we locate the 250-volt point *D* on the horizontal axis and move up from that point to the 6-ma point *E* on the vertical axis. We find that the two lines intersect at the −4-volt grid bias line *F*. Thus for a plate voltage of 250 volts and a plate current of 6 ma, the grid bias voltage must be −4 volts.

If our tube is drawing 2 ma plate current with a grid voltage of −2 volts, we can find its plate voltage by locating the 2-ma point *G* on the vertical axis, moving to the right until we intersect the −2-volt grid bias line *H*, and then dropping down to the 100-volt point *I* on the horizontal axis.

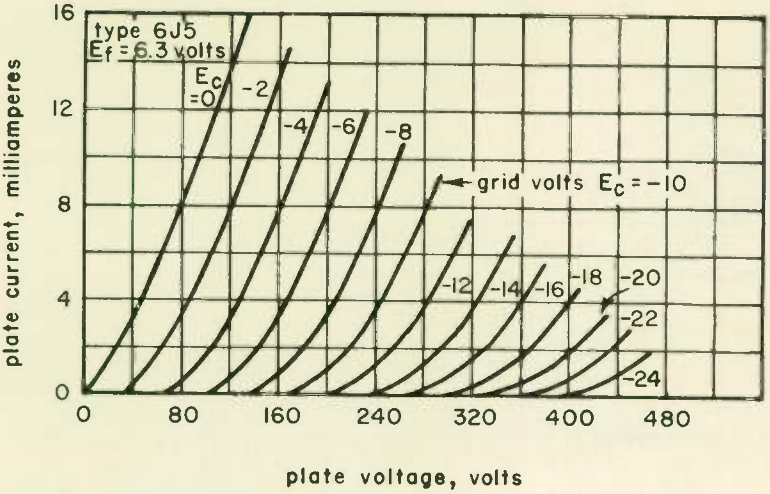

Fig. 8.

WHAT HAVE YOU LEARNED?

1. Illustrated in Fig. 8 are the average plate characteristics of a type 6J5 triode. With a grid bias voltage E_c of −4 volts and a plate voltage E_b of 160 volts, what is the value of plate current?

2. In checking a particular circuit that you are servicing you find that the 6J5 tube is receiving a plate voltage of 240 volts and has a grid voltage of −10 volts. You can find that the value of plate current is ________________ by use of the average plate characteristic curves.

3. Since the plate current through a triode for a given plate voltage can be varied by the control grid voltage, it is apparent that the tube acts as a variable ________________.

ANSWERS

1. 7.5 ma   2. 3.5 ma   3. Resistor

5 THE SPACE CHARGE AND PLATE SATURATION . . . As the electrons boil out of the cathode surface, they tend to congregate immediately around the cathode surface and repel other emitted electrons back into the cathode, since like charges repel each other.

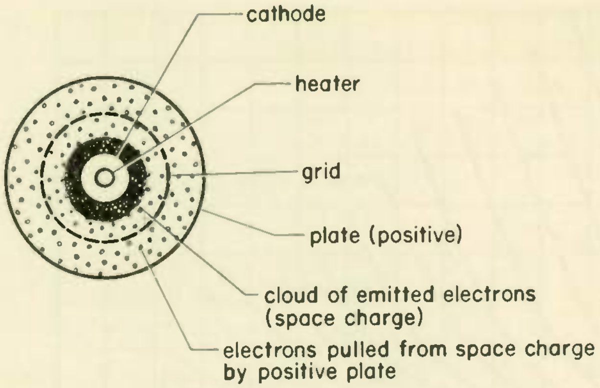

Fig. 9 **Space charge in a vacuum tube.**

The size of this cloud of electrons, called the *space charge,* is limited by the plate in the tube. Electrons are continually attracted to the positively charged plate, thus reducing the space charge (see Fig. 9). As the plate voltage is made increasingly more positive, the rate at which electrons are pulled out of the space charge onto the plate increases.

If the plate voltage is made sufficiently high, electrons are pulled out of the space charge onto the plate at a rate as great as the electron-emission capability of the cathode surface, and a further increase in plate voltage will cause no increase in electron flow from cathode to plate. This condition is known as *plate saturation.** In most applications, it is not desirable to operate a tube to the point of plate saturation.

WHAT HAVE YOU LEARNED?

1. A tube space charge consists of a cloud of (a) ______________ which form around the surface of the (b) ______________. The positive plate attracts electrons from the (c) ____________ ____________. The electrons emitted by the cathode may move on to the (d) ____________ ____________ or be repelled back to the (e) ______________.

2. If the cathode in a certain tube emits electrons at the rate of 80 ma, the maximum possible plate current is (a) ________ milliamperes. When the plate current is this value, (b) __________ ______________

---

*Plate saturation is also obtained when the grid bias is reduced to the point where further reduction will not further increase plate current.

is said to occur. If plate current is only 30 ma, what happens to the additional 50 ma being emitted by the cathode? (c) ______________________________ .

ANSWERS

1. (a) Electrons; (b) cathode; (c) space charge;
   (d) plate; (e) cathode
2. (a) 80 (b) plate saturation (c) Electrons are repelled from the space charge back to the cathode at a 50-ma rate. For every 80 electrons leaving the cathode, 50 electrons return.

6 AMPLIFICATION FACTOR . . . There are three important tube constants which help to identify the electrical properties of a tube. These constants are the amplification factor μ, the plate resistance r_p, and the transconductance g_m.

The amplification factor, or μ, is defined as the ratio of the change in plate voltage E_b to the change in control grid voltage E_c required to keep I_b constant. In equation form,

$$\mu = \frac{\text{change in plate voltage } E_b}{\text{change in grid voltage } E_c} \qquad \text{with plate current } I_b \text{ constant}$$

For example, assume E_b is increased from 50 to 100 volts, which will result in an increase in I_b if E_c is not changed. Assume that E_c must be increased from -2 volts to -4 volts in order to maintain I_b constant. The amplification factor is:

$$\mu = \frac{50}{2} = 25$$

A 2-volt change in E_c has the same effect on the plate current as a 50-volt change in E_b for the tube considered in the example.

The amplification factor actually indicates how large a plate voltage change is required to have the same effect on I_b *as a 1-volt change in* E_c. *In this example, a 1-volt change in* E_c *has as much effect on* I_b *as a 25-volt change in* E_b.

As pointed out in the preceding lesson, a voltage amplifier should have as large a voltage amplification A_v as possible. The amplification factor of the tube is the maximum A_v value that can be achieved by that tube. Therefore, when selecting a tube to be used as a voltage amplifier, the amplification factor is one of the most important considerations. The amplification factor of most tubes is given in any good tube manual. High-μ triodes have amplification factors as high as 100.

WHAT HAVE YOU LEARNED?

1. The amplification factor indicates the amount of change in (a) _________ required to produce the same effect on (b) _________ as a 1-volt change in E_c.

2. Vacuum tubes with high amplification factor values are preferred for service in (a) ______________ amplifiers because they are capable of producing large values of voltage (b) __________________ .

3. In a certain vacuum tube, a 100-volt change in E_b is required to have the same effect on I_b as a 5-volt change in E_c. The amplification factor is ________ .

4. A certain vacuum tube has a μ of 100. What change in E_b is required to have the same effect on I_b as a 0.25-volt change in E_c? ______________

ANSWERS

1. (a) E_b; (b) I_b 2. (a) voltage; (b) amplification
3. 20 4. 25 volts

7 PLATE RESISTANCE r_p AND TRANSCONDUCTANCE g_m . . .

The vacuum tube offers resistance to the flow of d-c current from the cathode to the plate. This d-c resistance is equal to the d-c plate voltage divided by the d-c plate current.

Of greater importance is the a-c resistance of the tube, which is the resistance offered by the tube to the flow of a-c between the cathode and plate. This a-c resistance is equal to the a-c plate voltage divided by the a-c plate current. The a-c resistance of the tube is called the *plate resistance*.

For example, a certain vacuum tube undergoes an I_b change of 0.1 ma when E_b changes by 10 volts. The plate resistance is

$$r_p = \frac{E_b \text{ change}}{I_b \text{ change}} = \frac{10}{0.0001}$$

$$r_p = 100{,}000 \text{ ohms}$$

Therefore, this tube offers 100 kilohms of resistance to the flow of a-c current between its plate and cathode.

The *transconductance* g_m of a tube may be defined as the ratio of a change in I_b to the change in E_c which caused it. In equation form,

$$g_m = \frac{I_b \text{ change}}{E_c \text{ change}}$$

The unit of transconductance is the mho, but the micromho (one-millionth of a mho) is in more popular use.

Actually, once μ and r_p are known, g_m can be calculated by using the formula

$$g_m = \frac{\mu}{r_p}$$

Tubes used as power amplifiers have high values of g_m and relatively low values of r_p and μ.

WHAT HAVE YOU LEARNED?

1. In a certain vacuum tube, E_b changes by 5 volts when I_b changes by 1 ma. The plate resistance is ______ ohms.

2. A certain tube has an r_p value of 50 kilohms. How large a change in I_b can be expected with a 1-volt change in E_b?

3. A certain tube has an r_p value of 10 kilohms. How large a change in E_b can be expected with a 1-ma change in I_b? ______

4. In a certain tube, a 1-volt change in E_c causes a 2-ma change in I_b. The transconductance of this tube is ______ micromhos.

5. A certain tube has a μ of 100 and r_p of 100 kilohms. The transconductance of this tube is ______ micromhos.

1. 5000 2. $I_b = \frac{E_b}{r_p} = \frac{1}{50,000} = 0.02$ ma

3. $E_b = I_b \times r_p = 0.001 \times 10,000 = 10$ volts

4. 2000 5. 1000

MULTIELEMENT VACUUM TUBES

The triode vacuum tube has certain limitations which are analyzed in this section of the lesson. One of the earlier attempts to overcome the shortcomings of the triode resulted in the development of the tetrode. Although the tetrode greatly reduced the problems encountered with the triode, it introduced a new problem of its own. This led to the development of the pentode tube, which has most of the advantages of the triode and tetrode types and greatly overcomes the problems associated with them. The chief electrical properties and uses of the tetrode and the pentode are considered in the following topics.

8 THE PROBLEM OF INTERELECTRODE CAPACITANCE . . .

A capacitor is made of two plates separated by insulating material called the dielectric. In fact, any two conducting surfaces separated by an insulator has capacitance. The plate and grid of a triode tube form the two plates of a capacitor, and the vacuum between the plates is the dielectric. The capacitance between these two tube elements is called the plate-grid capacitance C_{pg}. This capacitance has the same effect on the circuit as if it were replaced by an actual capacitor, with the same capacitance, connected between plate and grid externally to the tube, as shown by C_{pg} in Fig. 10.

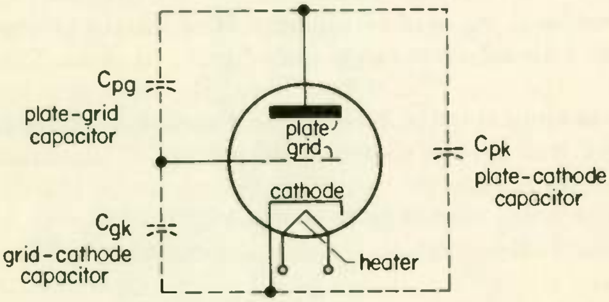

Fig. 10 **Interelectrode capacitances of a triode.**

Similarly, there is capacitance between plate and cathode and between grid and cathode. These capacitances are represented by C_{pk} and C_{gk} in Fig. 10. (The letter *k* is the usual symbol for cathode.)

These interelement capacitances are usually undesirable, and they are often serious sources of trouble. The plate-grid capacitance is the most troublesome, because it acts to form a path for the a-c signal component on the plate to flow back to the grid. You will learn in a later lesson how this causes the circuit to oscillate.

WHAT HAVE YOU LEARNED?

1. The triode vacuum tube has ______ interelectrode capacitances.

2. What is the dielectric of the triode's interelectrode capacitances?

______ ________ ____________

3. The higher the frequency the (a) ____________ the reactance of C_{pg}. Therefore the interelement capacitances of a tube are more troublesome at (b) *(low) (high)* frequencies.

ANSWERS

1. Three 2. The tube vacuum

3. (a) Lower . . . The higher the frequency, the easier current passes through a capacitor. (b) High . . . Below 10,000 cps these capacitances cause little trouble. At radio frequencies, they are so troublesome as to make the use of a triode difficult.

9 THE TETRODE . . . The plate-grid capacitance of a tube can be greatly reduced by the use of a screen (constructed similarly to window screening, but of much finer mesh) between grid and plate. This new tube element is called the *screen grid.* Since the tube now has four elements (plate, control grid, cathode, and screen grid), it is called a *tetrode* tube. The prefix "tetr" means "four". The circuit symbol and a construction view of the tetrode are shown in Fig. 11.

When in a circuit, the screen grid is so connected that, while it has a positive d-c potential, it is at a-c ground by virtue of the capacitor C_{sg} in Fig. 12. The purpose of C_{sg} is to offer a very low impedance path to ground for a-c signals at the screen. In this way, the screen grid is

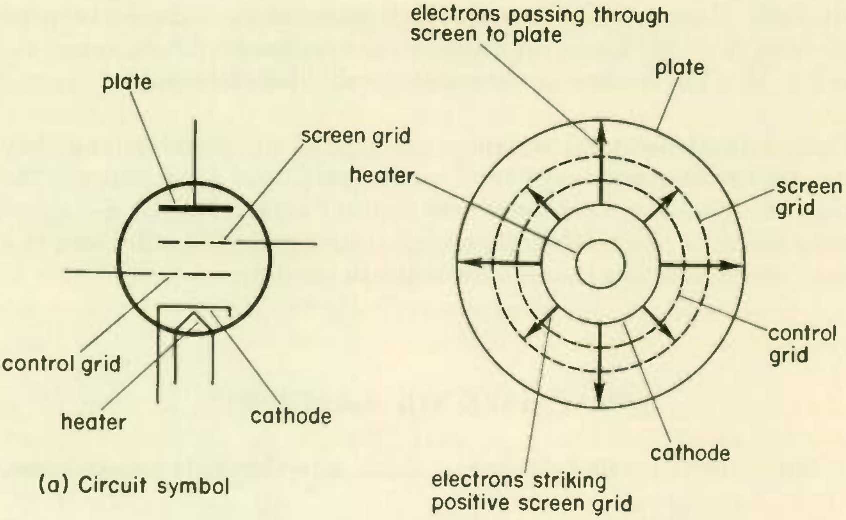

(a) Circuit symbol

(b) Tube construction

Fig. 11 **The tetrode vacuum tube.**

at ground potential as far as the a-c signal is concerned. This effective shielding reduces the capacitance between the plate and control grid to such a low value that the screen grid type of tube can be used with little signal feedback from plate to grid, even in radio-frequency circuits.

Since the screen grid is between the control grid and plate, the electrons passing through the control grid are not attracted by the posi-

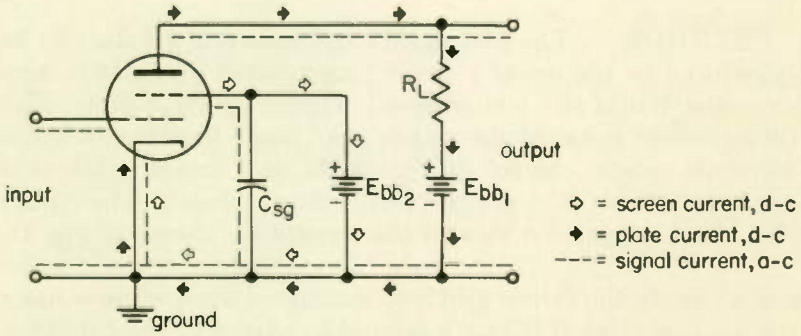

Fig. 12 **Diagram of simplified tetrode amplifier stage showing direction of current flow.**

tive plate until they pass through the screen grid. Therefore, a positive d-c voltage is applied to the screen. In this way, the electrons are attracted from space charge toward the screen grid. But since the screen is composed of a meshwork, the majority of the electrons miss the actual screen grid structure and pass to the plate through the holes in the screen.

Once the electrons arrive in the space between the screen and the plate, they feel the attraction of the positive plate and are drawn to it. A few of the cathode-emitted electrons strike the screen grid structure, and they make up the screen grid d-c current.

In Fig. 12, the screen grid supply is designated E_{bb_2} and the plate supply is designated E_{bb_1}. In most applications, the screen grid voltage is smaller in value than the plate voltage, which is the reason two different power supplies are used.

WHAT HAVE YOU LEARNED?

1. The screen grid is at (a) *(positive) (negative)* d-c potential so that the electrons will be attracted from the (b) ____________ through the (c) ____________ ____________ on toward the screen grid. The screen current consists of those electrons which are (d) ____________ by the screen grid. The remainder of the emitted electrons (e) ____________ ____________ the screen grid and are then under the influence of the (f) ____________ voltage of the (g) ____________ . The screen grid is placed at (h) ____________ a-c potential by picking a value of (i) ____________ which offers a very low impedance to the (j) ____________ ____________ .

2. What would be the effect of a *negative* d-c screen voltage?

3. The screen grid acts as a ____________ between the tube input and output circuits.

ANSWERS

1. (a) Positive; (b) cathode; (c) control grid
   (d) captured; (e) pass through; (f) positive
   (g) plate; (h) zero; (i) C_{sg}; (j) a-c signal
2. Plate current would be slight, since electrons would be repelled back to the cathode by the negative screen. 3. Shield

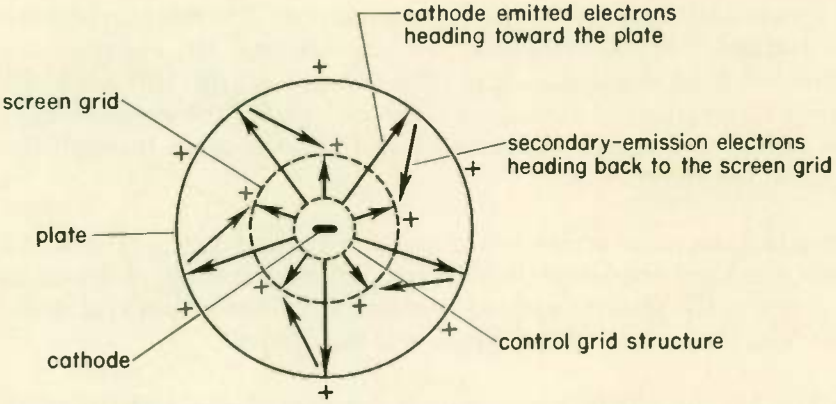

Fig. 13 **Overall action of secondary emission.**

10 SOLVING THE PROBLEM OF SECONDARY EMISSION . . .

Since the screen grid is placed at a positive potential, the cathode-emitted electrons are accelerated after they pass through the control grid. Because of the speed-up in their movement, these electrons strike the plate with such a velocity that many of them actually bounce off the plate back toward the screen grid. This is called *secondary emission.* Since the electrons are negative and the screen grid is positive, many of these secondary-emission electrons will be captured by the screen grid instead of returning to the plate. The overall action of secondary emission is shown in Fig. 13.

The overall result of secondary emission is that the plate current is lowered and the screen grid current is increased. This is undesirable, since the useful output signal is contained in the plate current. One method for reducing this problem is to operate the tetrode at a plate voltage that is considerably higher than the screen grid potential.

A more effective method of reducing secondary emission is to use a third grid, called the *suppressor grid.* Vacuum tubes that have three grids are called *pentodes,* since they have a total of five electrodes. The circuit symbol and construction of the pentode are shown in Fig. 14.

The suppressor grid is placed between the screen grid and plate, as shown in Fig. 14, and it is usually operated at the same potential as the cathode. Therefore, the electrons passing through the screen grid toward the plate are slowed down because the suppressor does not attract them. The electrons strike the plate at a lower velocity and are not as apt to bounce off. Those that do bounce off the plate

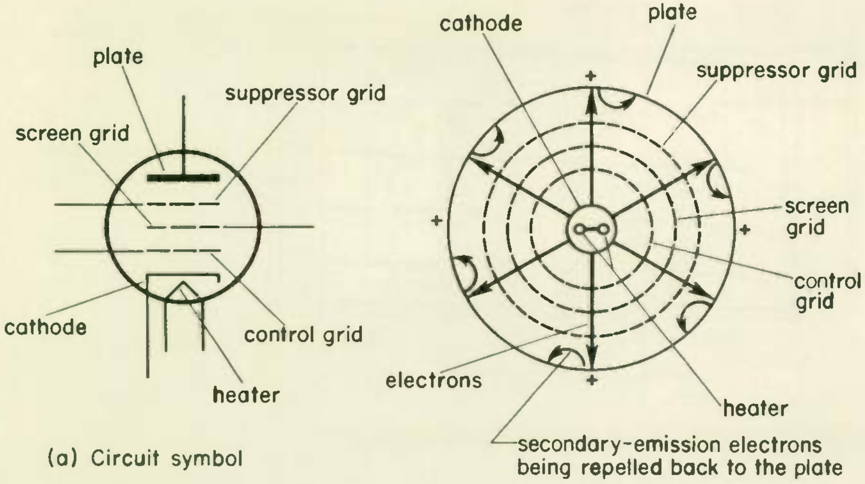

(a) Circuit symbol

(b) Tube construction

Fig. 14 The pentode vacuum tube.

return to it because the suppressor grid at cathode potential isolates them from the attractive force of the positively charged screen grid. Hence the problems of secondary emission are remedied by use of a suppressor grid.

WHAT HAVE YOU LEARNED?

1. The use of a screen grid reduces the problem of interelectrode capacitance between the (a) ________ and (b) ________ ________ but introduces the problem of (c) ________ ________. The (d) ________ type tube retains the advantages of the (e) ________ type tube and overcomes its chief problem by use of a fifth electrode called the (f) ________ ________. This fifth electrode decelerates the electrons as they approach the (g) ________ and repels the (h) ________ ________ electrons back to the plate.

ANSWERS

1. (a) Plate; (b) control grid; (c) secondary emission; (d) pentode (e) tetrode; (f) suppressor grid; (g) plate; (h) secondary emission

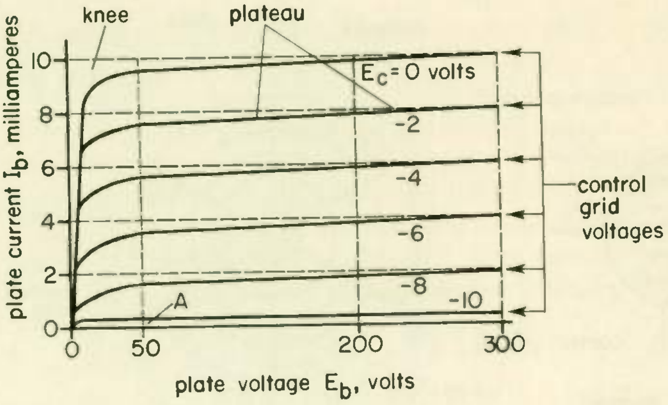

Fig. 15 ***E_b* versus *I_b* characteristics of the pentode.**

11 THE E_b VERSUS I_b CHARACTERISTICS OF THE PENTODE

. . . Incorporating a screen grid and suppressor grid results in the pentode plate voltage E_b versus plate current I_b characteristics being somewhat different than the same characteristics for the triode. The E_b versus I_b characteristics of the pentode are shown in Fig. 15.

The plate voltage E_b has the greatest effect on the plate current I_b for only low values of E_b, that is, between points *O* and *A*, Fig. 15. When the plate voltage is at the point *A* value, it is sufficiently positive to attract the electrons passing through the screen grid. Since the screen grid and suppressor grid are between the plate and the control grid, the plate cannot attract the electrons in the region of the control grid. These electrons are first attracted by the screen grid and are drawn toward the plate only after they pass through the screen grid.

As a result of this relative isolation of the plate from the control grid, changing E_b to greater values than point *A* (50 volts) does not change I_b very much. The E_b value at point *A*, beyond which increases in E_b do not greatly affect I_b, is called the *knee* of the characteristic, and the region that lies to the right of point *A* is called the *plateau*.

Notice that each E_b versus I_b characteristic curve in Fig. 15 is for a constant value of control grid voltage E_c. In this way, the effect of E_c upon I_b is readily seen. For example, when E_c is 0 volts and E_b is 200 volts, I_b is 9.8 ma. When E_c is −4 volts and E_b is still at 200 volts, I_b is 5.8 ma. Hence, increasing the grid bias from 0 volts to −4 volts reduces I_b.

The screen grid voltage is maintained at a constant d-c value in pentode amplifiers. The recommended value of screen grid voltage for most pentodes can be found in any good tube manual.

One of the chief characteristics of the pentode, as can be seen in Fig. 15, is that I_b is relatively independent of E_b over a great portion of its characteristic curve. Notice that if E_b is 300 volts rather than 200, essentially the same values are obtained for I_b in the example given earlier in this topic. In the great majority of applications, the operation of the pentode amplifier is restricted to the plateau region.

WHAT HAVE YOU LEARNED?

Refer to Fig. 15.

1. An increase of plate voltage E_b from (a) ________ volts to (b) ________ volts has a great effect on the value of I_b. The point on the characteristic curve where I_b becomes relatively independent of E_b is called the (c) __________ of characteristic. The portion of the characteristic to the right of point *A* is called the (d) ______________, and this is the area where E_b changes have a (e) *(large) (small)* effect on I_b.

2. Since E_b has little control over I_b in the region to the right of point *A*, the control of I_b in the pentode is achieved by the variations of ______________.

3. With E_b constant at 200 volts, I_b changes from 4 ma when E_c is (a) ________ volts to 6 ma when E_c is (b) ________ volts. Hence a total of (c) __________ volts change in E_c produces a total of (d) __________ milliamperes in I_b. This indicates that a 1-volt change in E_c would change I_b by (e) ________ milliamperes.

ANSWERS

1. (a) 0; (b) 50; (c) knee; (d) plateau; (e) small
2. E_c 3. (a) 5.8; (b) 3.8; (c) 2; (d) 2; (e) 1

12 REMOTE-CUTOFF PENTODES . . . The more negative the control grid bias applied to a tube, the less the plate current. If the bias is made sufficiently negative, a point at which the plate current becomes zero is reached. This is called the *cutoff point* of the tube.

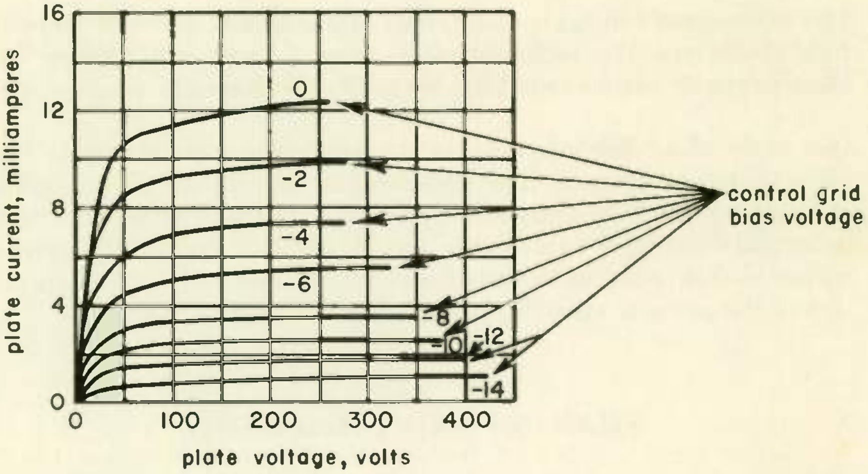

Fig. 16 Characteristic curves of a remote-cutoff pentode.

In Fig. 15 as the control grid bias voltage is made more and more negative, the plate current steadily decreases until, for a bias of −10 volts, the plate current is essentially zero. A pentode tube that behaves like this is said to have a *sharp cutoff*.

With the *remote cutoff* pentode, the more negative the bias is made, the less effect it has in reducing the plate current. Changing the bias from 0 to −2 volts on the remote cutoff pentode of Fig. 16 reduces the plate current 2.3 ma at 250 plate volts. Changing the bias from −8 to −10 volts only reduces the plate current by 1 ma. Contrast this with the sharp cutoff pentode of Fig. 15 where the change in plate current for a given change in bias voltage is approximately the same for any value of bias voltage.

The gain of amplifiers using remote-cutoff pentodes varies with the value of control grid bias used. By making the bias more negative, the gain of the amplifier is decreased. Remote-cutoff pentodes are used whenever a simple automatic method of varying gain is desired. An example is an ordinary radio receiver. The signal reaching the antenna is subject to variations in strength. If the amplifier stages of the receiver had a constant gain, the loudness of the speaker would vary as the signal reaching the antenna varied. By using remote-cutoff tubes, the gain can be made to vary, so that the output from the speaker is nearly constant.

WHAT HAVE YOU LEARNED?

1. Cutoff is the condition such that I_b is (a) ________. When a d-c bias system which causes the control grid bias to change in order to vary

the gain is used, (b) ______ ______ type of pentode should be used. The (c) ______ ______ type of pentode is used in those amplifiers in which the control grid bias voltage is (d) ______.

2. In a certain tube, changing the grid control voltage from −1 volt to −2 volts causes the plate current to change from 8 ma to 6 ma. Varying the grid voltage from −3 volts to −4 volts changes the plate current from 4.5 ma to 3.5 ma. The pentode tube used is the ______ ______ type.

ANSWERS

1. (a) Zero; (b) remote cutoff; (c) sharp cutoff; (d) constant
2. Remote cutoff . . . Varying E_c from −3 volts to −4 volts causes less change in plate current than occurs when E_c is varied from −1 volts to −2 volts. With a sharp-cutoff tube the change in plate current would be the same in both cases, assuming that operation is in the plateau region.

13 THE PENTODE AMPLIFIER . . . Figure 17 illustrates a pentode amplifier. Notice that four voltage supplies are shown. E_{cc} is used for the control grid bias; E_{bb_1} is the plate supply; E_{cc_2} is the screen grid supply voltage; and E_{ff} is the heater supply. You will see later how a single voltage source can be used to supply all these different voltages. As in the tetrode amplifier, C_{sg} is used to bypass the a-c variations in the screen grid directly to ground. Notice that the a-c in the screen circuit returns to ground by way of C_{sg} and the d-c returns to ground through E_{bb_2}.

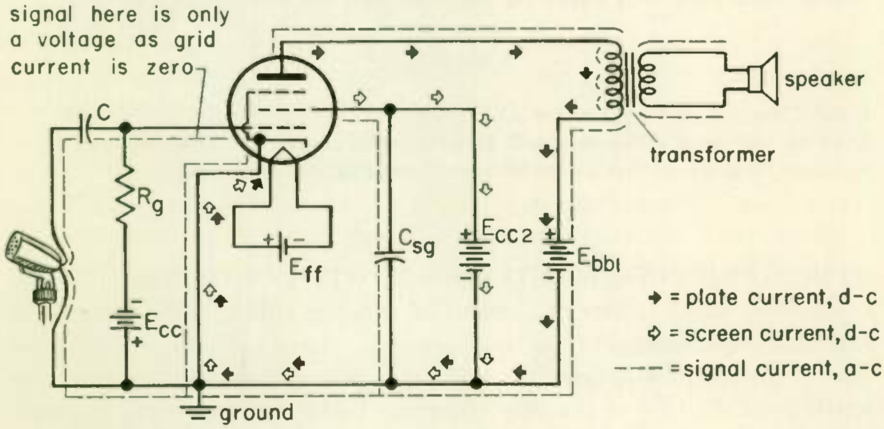

Fig. 17 Simplified pentode amplifier showing current flow.

The signal on the plate is transformer-coupled to the speaker, while the d-c component of I_b is returned to common by way of E_{bb_1}. Notice that both the a-c and d-c components of the screen grid and plate circuits flow in the cathode circuit.

The suppressor grid is usually connected to the cathode. In many pentodes, the connection of the suppressor to the cathode is internal and is made by the tube manufacturer, as shown in Fig. 17. In some pentodes, however, the suppressor lead is not connected internally, and the connection to the cathode must be made externally by the user. A tube manual always indicates whether or not the suppressor grid is internally connected to the cathode.

WHAT HAVE YOU LEARNED?

1. Assume you were going to build the amplifier shown in Fig. 17. You selected a pentode but did not know if the suppressor grid was internally connected. Hence you would consult a (a) ______ ______. While you were checking on the information about this pentode, you should also find the recommended values of screen grid (b) ______ and ______.

2. The purpose of R_g in Fig. 17 is to ____.

3. Since both the d-c and the a-c signal pass through the primary of the transformer, will there be both d-c and a-c in the speaker? ______.

ANSWERS

1. (a) Tube manual; (b) voltage and current
2. Block the input signal so it will go to the grid and not short through E_{cc}.
3. No . . . Transformers transfer only a-c from primary to secondary.

14 REPLACING FIXED GRID BIAS E_{cc} WITH CATHODE BIAS . . .

Up to this point in our discussion of vacuum tubes, the control grid bias has been obtained from a separate d-c supply, E_{cc}. Because of the cost of an additional power supply, this is avoided in actual practice when possible. One of the most common methods for placing the control grid at a negative potential with regard to the cathode is to use a resistor in the cathode lead, resistor R_k in Fig. 18.

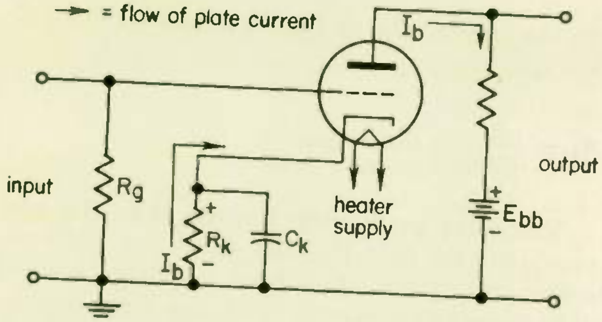

Fig. 18 **Amplifier with cathode bias.**

The grid is connected through R_g to ground, and it is therefore at ground potential. But with respect to the cathode it is at a negative potential. The flow of plate current I_b through cathode resistor R_k causes a voltage drop across R_k. The result is that the cathode of the tube is made positive with respect to ground. Since the grid is at ground potential, it must then be negative with respect to the cathode.

The control grid bias is the reading obtained by a suitable voltmeter connected between grid and cathode. That is, the tube bias is the potential difference between grid and cathode, and not between grid and ground. If for example, the voltage drop across R_k in Fig. 18 is 5 volts, the grid bias on the tube is −5 volts, even though the grid-to-ground voltage is zero.

The actual a-c signal in the plate circuit does not pass through R_k but is instead bypassed through C_k. Bypassing is accomplished by using a value of C_k sufficiently large (typically an electrolytic capacitor between 8 and 50 μf) that its reactance at the signal frequencies involved will be low compared to the resistance of R_k. If the a-c signal also passed through R_k, you would get a pulsating voltage across R_k, and consequently a pulsating voltage value would be applied to the grid as bias. For satisfactory operation in most cases a pure d-c voltage is needed as bias.

The value of the cathode bias resistor R_k is calculated from the following relationship, where I_{b_2} is the screen grid current when a pentode tube is used. For a triode, use zero for I_{b_2}.

$$R_k = \frac{\text{desired grid bias}}{I_b + I_{b_2}}$$

For example, assume for the triode tube of Fig. 18 a grid bias of -2 volts is desired and I_b is 4 ma. Then,

$$R_k = \frac{2}{0.004} = 500 \text{ ohms}$$

15 BLOCKED GRID... You have previously learned that the grid resistor R_g in Fig. 18 provides a d-c path through which the bias voltage can be applied to the grid of the tube. Also, you have learned that R_g should be high in order to effectively block the input a-c signal so that it does not bypass to ground through R_g. From the standpoint of doing the best job of blocking the incoming signal, the greater the resistance of R_g the better. However, if R_g is too high, it will be found that the tube functions erratically and that the plate current may cut off.

A tube that operates erratically because of too high a d-c resistance path between grid and ground is said to have a *blocked grid*. The cause of the erratic operation is the fact that grid current is not really zero, although it is so slight that it is generally assumed to be zero. A few electrons are regularly captured by the grid from the current flow through the grid mesh within the tube. Unless these electrons have an escape path to ground, they will accumulate on the grid and build up a bias of their own, which will interfere with proper tube operation. If the grid resistor is not above an acceptable value, the voltage drop caused by the few electrons of d-c flowing through it will be insignificant, so that the grid is essentially at ground d-c potential.

WHAT HAVE YOU LEARNED

1. Refer to Fig. 18. Resistor R_g provides a path for (a) ________ ________ to ground from the (b) ________ ________. If R_g is too large or is left out completely, the (c) ________ ________ condition will develop, which will cause the tube to operate erratically or (d) ________ conducting.

2. Assume the amplifier of Fig. 18 is to have a grid bias of -10 volts and the plate current is equal to 40 ma. The required R_k value is ______ ohms.

3. Assume the amplifier of Fig. 19 is brought to you for repair. The complaint is that the headphones output is normal when first turned on

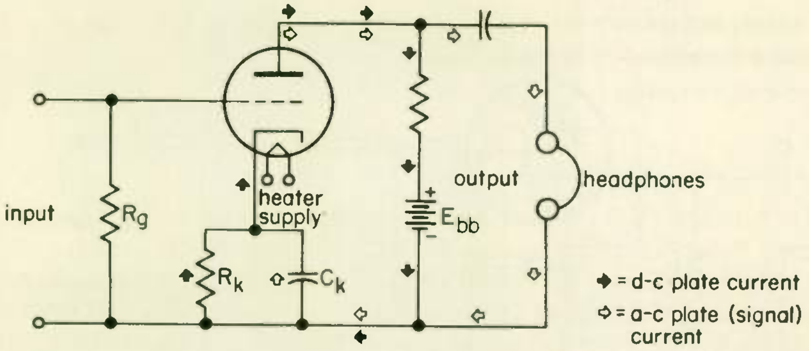

Fig. 19

but becomes zero shortly thereafter. Would you suspect a blocked grid? (a) ______ How would you check out this possibility? (b) ______________ ____.

ANSWERS

1. (a) Electron flow; (b) control grid; (c) blocked grid; (d) stop 2. 250
3. (a) Yes; (b) Turn off the power. Measure the resistance from the control grid to common, which should be equal to the value of R_g. Values greater than the normal R_g value indicate the possibility of an open or broken grid connection. If you do not know the proper value of R_g, any measured value greater than one or two megohms should be suspected.

16 SCREEN DROPPING RESISTOR . . . Although the screen voltage E_{b_2} is usually less than the plate supply voltage E_{bb}, a screen resistor, R_s in Fig. 20, can be used to reduce E_{bb} to the proper value for the screen. In this way both the screen grid and the plate can be operated from a single power supply.

WHAT HAVE YOU LEARNED?

1. In Fig. 20 three different d-c voltage values must be applied to various elements of the tube in order for the tube to operate properly. These are (a) __________ __________, (b) __________ __________, and (c) ________ ________ __________.

2. In Fig. 20 all three voltages needed are obtained from a single power supply. The voltage drop across R_k provides the (a) __________ __________ voltage, and the proper value for the screen grid voltage is

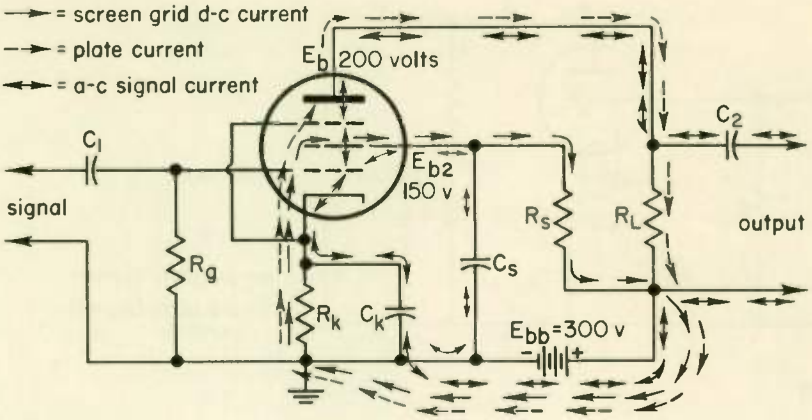

Fig. 20

obtained by means of (b) ______ . The plate voltage is lower than E_{bb} because of the voltage drop across (c) ______ .

3. What is the purpose of capacitor C_k in Fig. 20? ______________________________ .

4. Some of the a-c component of the plate current will be captured by the screen grid. If this were to pass through resistor R_s, there would be an a-c voltage as well as a d-c voltage drop across R_s. The result would be a pulsating voltage applied to the screen grid, which is undesirable. How is the a-c kept out of R_s? ______________ .

5. In Fig. 20 the voltage drop across R_s is (a) ______ volts. If the screen current, which is the current through R_s, is 10 ma, what value of resistance should be used for R_s? (b) ____________ .

ANSWERS

1. (a) Plate voltage; (b) screen voltage; (c) grid bias voltage
2. (a) Grid bias voltage; (b) R_s; (c) R_L
3. To provide a path for the a-c component of the plate current so that only the d-c component will pass through R_k and provide a pure d-c bias voltage.
4. By means of C_s, which bypasses the a-c to ground. To be effective, the reactance of C_s should not be more than one-tenth the resistance of R_s.
5. (a) 150 . . . This resistor must reduce the voltage from 300 volts to 150, a drop of 150 volts. (b) 15,000 ohms . . . By Ohm's law, divide voltage drop by current to get resistance:

$$\frac{150 \text{ volts}}{0.01 \text{ amp}} = 15{,}000 \text{ ohms}$$

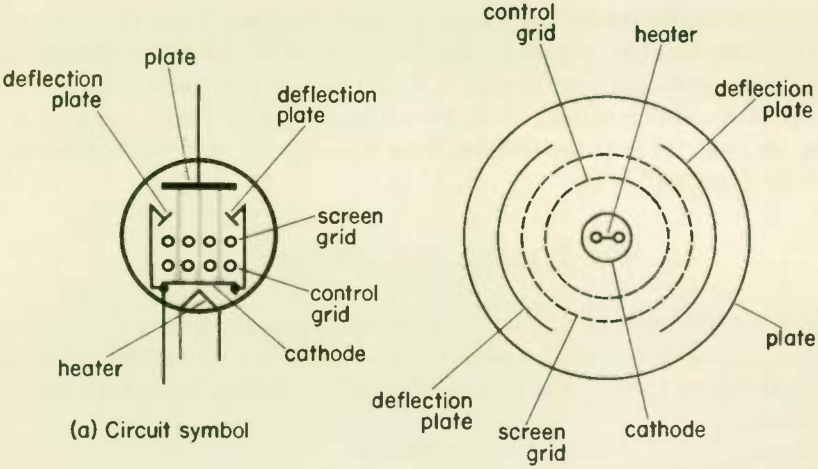

(a) Circuit symbol

(b) Location of tube elements

Fig. 21 **The beam power tube.**

17 THE BEAM POWER TUBE . . . A power amplifier is one that is capable of delivering substantial power to its load. A tube which is specially constructed for use as a power amplifier is the beam power tube illustrated in Fig. 21.

The meshwork of the control grid and screen grid are so aligned that the cathode-emitted electrons can easily move through these two grids. Furthermore, the screen grid meshwork is widely spaced in order to increase the ease with which electrons will move toward the plate.

Deflection plates which are internally connected to the cathode are mounted between the screen grid and plate. As the heavy flow of electrons passes through the screen grid, the electrons are repelled by the deflection plates because the plates are negative owing to their being connected to cathode. This concentrates the moving electrons into "beams," as shown in Fig. 21. Electrons which tend to bounce off the plate run into the oncoming stream of electrons and are thereby repelled back to the plate. Hence, the beam of electrons performs the same function as a suppressor grid. The beam power tube is said to have a *virtual suppressor* because the electron beam accomplishes the same thing that an actual suppressor would accomplish.

18 MAXIMUM PLATE DISSIPATION . . . One of the considerations that must be given to all vacuum tubes, and particularly to those used as power amplifiers, is the maximum plate power dissipation. Plate

dissipation is the power used up in passing electrons from the cathode to the plate. Heat is created as the electrons strike the plate. Maximum plate dissipation at zero signal is equal to the product of E_b and I_b. The maximum plate dissipation for all tubes can be found in any good tube manual. This value must not be exceeded if maximum tube life is to be expected.

WHAT HAVE YOU LEARNED?

1. If the plate current in Fig. 20 is 50 ma, the plate power dissipation is (a) ______ watts. Could a 6K6 tube be used in this circuit? A tube manual shows that it has a maximum plate dissipation of 8.5 watts. (b) ______

2. A pentode has, but a beam power tube does not have, a (a) ______ electrode. However, a beam power tube functions similarly to a pentode because the directed electron beam going to the plate repels secondary electrons back to the plate, and therefore the electron beam takes the place of a (b) ______ grid. The tube is spoken of as having a (c) ______ suppressor.

ANSWERS

1. (a) 10 . . . $P = E_b \times I_b = 200 \times 0.05 = 10$ watts; (b) No
2. (a) Suppressor; (b) suppressor; (c) virtual

19 COMPARISON OF THE TRIODE, TETRODE, AND PENTODE

. . . The triode has found popular use in low-frequency voltage amplifier circuits. The chief drawback of the triode is its plate-to-grid interelectrode capacitance, which ranges from 2 to 3 pf for most triodes. High-μ triodes can have amplification factors as high as 100. The triode is less noisy than the tetrode or pentode.

Tetrodes are not in common use because of the problems associated with secondary emission. In order to reduce the secondary emission in the tetrode, the plate voltage must be kept at values considerably greater than the screen voltage. Because this is not always convenient or practical, the useful operating range of the tetrode is restricted.

Pentodes are most easily adapted to various circuit applications. They can be used for low- or high-frequency work. The plate-to-control-grid interelectrode capacitance of most pentodes ranges from 0.001 to 0.005 pf, which is considerably lower than the typical values found in triodes. Because of the two basic types of control grid construction, a pentode can be selected in accordance with the type of bias employed by the amplifier. For example, the intermediate-frequency amplifier of a radio receiver employs the remote-cutoff type pentode, since the control grid bias is the type which varies directly with the strength of the a-c input signal.

Pentodes have higher values of plate resistance than triodes, since a large change in E_b is accompanied by a relatively small change in I_b. The amplification factor of pentodes is usually higher than it is for triodes, because of the larger r_p values. For example, the remote-cutoff pentode 6SK7 has an r_p of about 100 kilohms, and its approximate transconductance is 2000 μmhos (micromhos). Recall that the amplification factor can be found by the formula:

$$\mu = g_m r_p$$

By substituting values, we have

$$\mu = 0.002 \times 100{,}000$$
$$\mu = 200$$

An amplification factor of over 100 is not unusual for pentodes, although the amplification factor of triodes is rarely that high.

WHAT HAVE YOU LEARNED?

1. What factor limits the use of triodes in high-frequency applications?

____

2. Name one advantage that the triode has over multielement tubes.

____

3. Name one advantage of the tetrode over the triode.

____

4. Name one advantage of the pentode over the tetrode.

____

1. The plate-to-control grid interelectrode capacitance
2. Less noisy than the tetrode and pentode types
3. Reduced plate-to-control grid interelectrode capacitance
4. No secondary emission problem.

20 THE GETTER . . . During manufacture of a vacuum tube, minute traces of gas are released by the tube elements. To remove this contaminating gas from the tube, a "getter" in the form of a small pellet or ribbon is placed in the tube during its manufacture. After final evacuating and sealing, the pellet or ribbon is vaporized, enabling it to "clean up" any remaining traces of gas.

TUNGAR RECTIFIER TUBES AND THYRATRONS

So far in this lesson, we have been talking about vacuum tubes, which must be highly evacuated to allow the free travel of electrons from their cathodes to plates. A drawback of vacuum tubes, particularly those used as rectifiers, is their rather high internal resistance. This internal resistance causes a considerable voltage drop which can reduce both rectifier output voltage and efficiency.

In order to get around this problem, gaseous rectifiers which have a voltage drop of only a few volts have been developed. These tubes rely upon the use of ionized gas for their operation; they are particularly useful at low voltages where their low voltage drop is important.

The thyratron is a gas triode or tetrode which possesses unique properties unlike any vacuum-tube triode. The thyratron is capable of controlling large amounts of power from a very small input signal. It operates very much like a switch: it is either completely on or completely off.

21 THE TUNGAR RECTIGON RECTIFIER BATTERY-CHARGING CIRCUIT . . . The tungar rectigon rectifier is designed to handle high current at low voltages. The gas in the tube is either argon or a mixture of argon and mercury vapor. Tungsten is used for the filament, which is of heavy construction so that it can emit a large quantity of electrons. The plate is composed of graphite.

The tungar rectigon rectifier is commonly used for charging batteries. Figure 22 shows a typical circuit for a battery charger. A single-coil

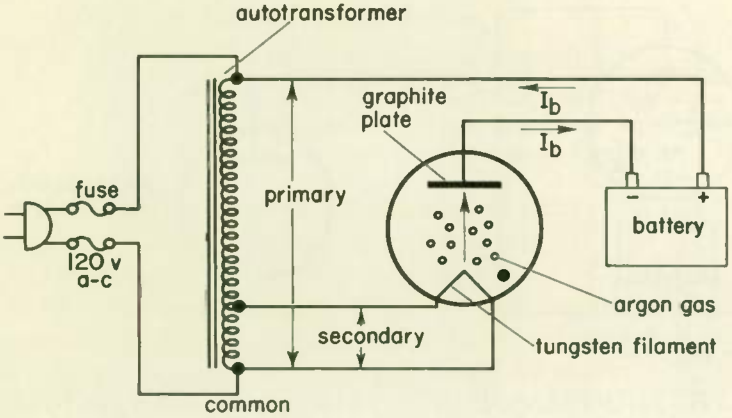

Fig. 22 **The tungar rectigon rectifier in use as a battery charger.**

transformer, called an autotransformer, is utilized. The entire coil serves as the primary, to which the 120 volts a-c (ordinary line potential) is applied. The lower section of the coil is tapped off, as shown in Fig. 22, to the desired filament voltage. During the positive half-cycle of the input line voltage, the tube conducts in the direction indicated by the arrows. Since this tube can pass large values of I_b, it is a very effective battery charger.

WHAT HAVE YOU LEARNED?

Refer to the circuit of Fig. 22.

1. An autotransformer has (a) ________ coil. The (b) ____________ coil serves as the primary, and the secondary is between the (c) ________ and common. The secondary voltage is used for the (d) ____________, and the primary voltage is applied to the (e) ____________ of the tube.

2. Assume you are going to charge a battery with the circuit of Fig. 22. You find that the fuse burns out each time the circuit is closed. What could be wrong with the battery?

____

ANSWERS

1. (a) One; (b) entire; (c) tap; (d) filament; (e) plate
2. Some or all of the plates in the battery have shorted out and the battery cannot be recharged.

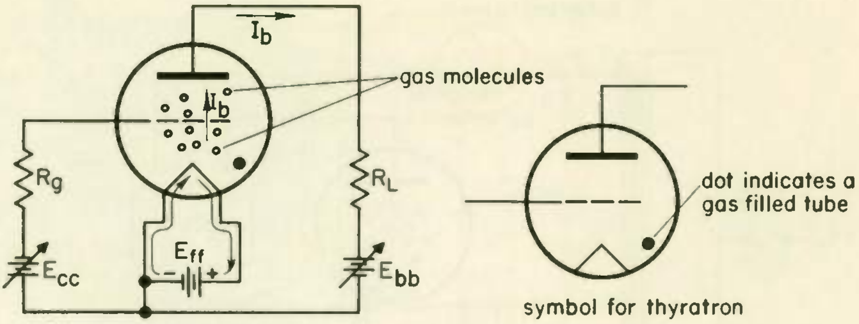

Fig. 23 The thyratron.

22 THE THYRATRON GAS TUBE . . . The thyratron is a gas triode, the circuit and symbol of which are shown in Fig. 23. The thyratron is fired into conduction by making the control grid less negative when the plate has a positive potential. E_{ff} maintains the correct filament current so that the required number of electrons are emitted. By reducing E_{cc}, the grid is made less negative and the filament-emitted electrons travel toward the plate at higher velocities. Since these electrons are moving at higher speeds, they are more likely to knock electrons out of the gas molecules. This constitutes ionization.

Once this ionization begins, the positive ions congregate around the negative control grid. This results in the control grid losing control over the tube current. The magnitude of the current is limited by the size of R_L in the plate circuit once the tube is fired into conduction. In order to stop tube conduction, E_{bb} must be reduced until the plate voltage is almost zero, which is called the extinction potential. It is important to recognize that the control grid is used only in initiating tube conduction and that it has no control over the magnitude of the plate current.

WHAT HAVE YOU LEARNED?

Refer to Fig. 23.

1. Why is E_{cc} made variable?______________________________
______________________________.

2. Why is E_{bb} made variable?______________________________
______________________________.

3. What is the purpose of R_L?______________________________
______________________________.

4. What is the purpose of the control grid?____________________
______________________________.

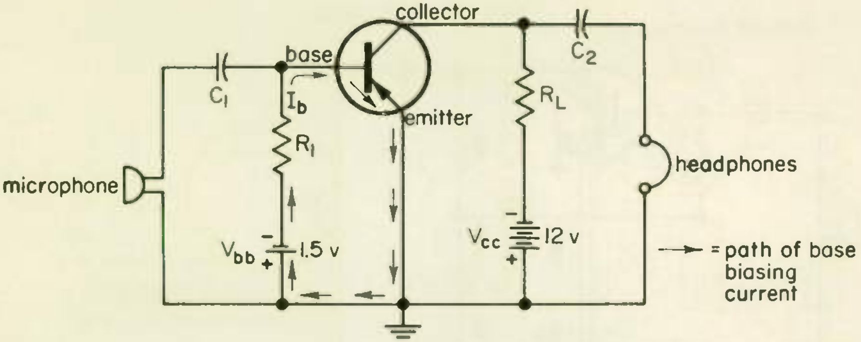

Fig. 24 **Basic transistor amplifier circuit, using PNP transistor.**

ANSWERS

1. So that tube current can be started. By reducing E_{cc} when the circuit is connected, the tube will be fired into conduction.
2. In order to stop tube conduction. When the tube current is to be turned off, E_{bb} is reduced to the point where I_b becomes zero.
3. R_L limits the I_b. If a lower I_b value is desired, a larger R_L is used.
4. To be used only in starting tube conduction.

TRANSISTOR BIASING

23 SINGLE VOLTAGE SOURCE FOR TRANSISTORS . . . Topics 14 and 16 have shown you how a single voltage source can be used to supply grid-bias voltage, screen voltage, and plate voltage to a vacuum tube, so that three separate voltage sources are not needed. We will now show how both collector voltage and base bias voltage for a transistor can be obtained from a single battery (or other voltage source).

Figure 24 shows the basic transistor amplifier circuit, with which you are already familiar. Battery V_{bb} supplies the proper operating bias to the base, which corresponds to the grid of a vacuum tube. There is an important difference in the biasing of transistors as compared to tubes. Tubes are biased by applying a negative biasing *voltage* to the grid; transistors are biased by feeding a biasing *current* to the base. The arrows in Fig. 24 show the path of the base biasing current. You can't bias the grid of a tube with a current, because the grid current will always be zero as long as the grid is negative, which it usually must be for proper operation. It is not practical to bias the base of a transistor in terms of voltage, because the base to emitter voltage is very small, perhaps 0.2 volt – you can consider it as zero for many practical purposes.

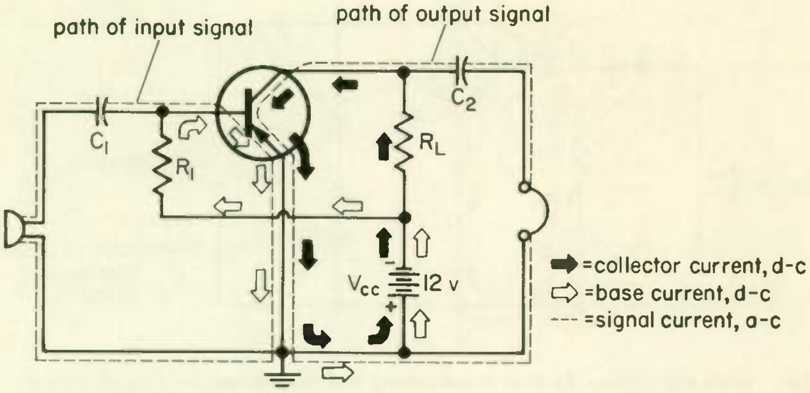

Fig. 25 **Amplifier of Fig. 24 using a single voltage source.**

Getting the proper base bias current in Fig. 24 is simple enough. Resistor R_1 is merely chosen of the correct value so as to allow the desired bias current to flow. If the proper base bias current I_b is 75 μamp, and if we ignore the small base voltage, the proper value of R_1 by Ohm's law will be

$$R_1 = \frac{V_{bb}}{I_b} = \frac{1.5\text{ v}}{75 \times 10^{-6}\text{amp}} = 20{,}000\text{ ohms}$$

Now there is no need to have separate batteries to supply the collector current and the base biasing current. We can get the current for the base just as well from V_{cc} as shown in Fig. 25, so that V_{bb} is not needed. The only difference is that we are now using 12 volts for supplying the base bias current, where 1.5 volts was used before. As a result R_1 will need to be much larger.

24 TRANSISTOR BIAS STABILIZATION . . . The simple base biasing method of Figs. 24 and 25, which consists in the use of a resistor R_1 to fix the d-c base current, is not satisfactory for most applications. This is because the characteristics of a transistor change with temperature changes. The best value of base bias current for when the transistor is cold will not be the best value after the transistor warms up from the heat generated in operation.

What is the correct value for the base bias current? In a tube, the correct grid bias voltage is that which will produce the proper d-c plate current for most satisfactory performance from the circuit. In a transistor, the correct base current is that which will produce the proper d-c collector current for most satisfactory performance from

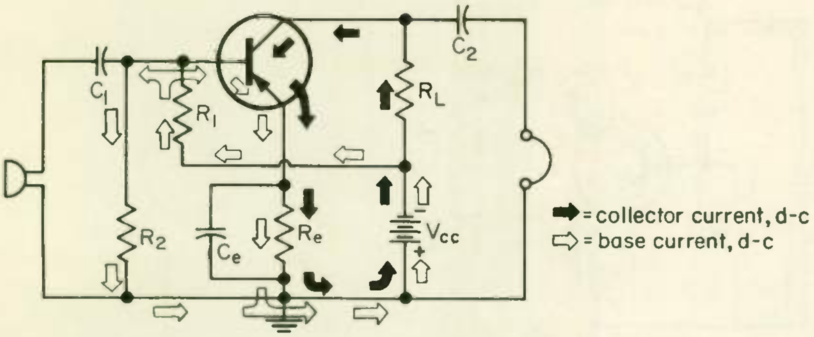

Fig. 26 **Amplifier of Fig. 25 with base biasing changed to provide stabilization.**

the circuit. If the base current is held at a constant value, as it is by R_1 in Figs. 24 and 25, the collector current will increase greatly as the transistor temperature increases. If the collector current is correct with the transistor cold, it will be too high with the transistor warmed up.

Since reducing the base bias current will reduce the collector current, collector current can be kept from greatly increasing as the transistor warms up by the use of a base biasing circuit that will reduce the base current when the collector current increases. Biasing circuits for this purpose are called *stabilization* circuits, and are used in most transistor amplifiers.

Figure 26 shows one widely used stabilization method. The circuit differs from Fig. 25 in that R_2, R_e, and C_e have been added. Also, a different value is used for R_1. Tracing the d-c base current from the negative side of V_{cc}, notice that after it passes through R_1, it divides, part going through R_2 and part through the transistor from base to emitter to form the base biasing current. In Fig. 27(a) the biasing part of the circuit has been redrawn, so that you can see better how the biasing current divides after going through R_1; part going through R_2, and part through R_e. The collector current, many times greater than the base current, also flows through R_e. In accordance with Ohm's Law, the emitter current produces a voltage across R_e that is proportional to the emitter current. Thus as the collector current, and therefore the emitter current, varies because of temperature changes, so does the voltage across R_e vary.

We can represent the voltage across R_e by an equivalent battery V_e, as shown in Fig. 27(b). Notice that the polarity of V_e is such as to try

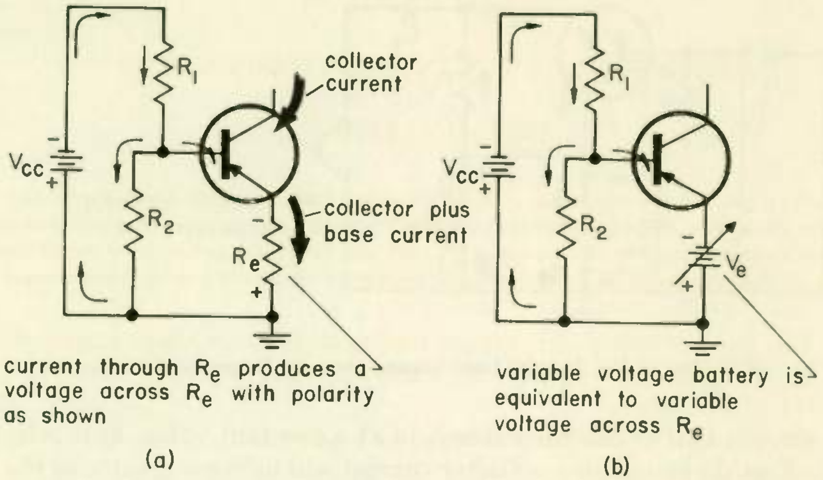

Fig. 27 **Stabilization circuitry from Fig. 26.**

to make the base-emitter current flow in the direction opposite to the base current direction shown in (a). That is, voltage V_e opposes the base current flow, so that the greater the voltage of V_e, the less the base current will be.

When the collector current increases because of transistor temperature increase, the voltage V_e increases. As a result, less of the biasing current through R_1 flows to the transistor base, and more flows through R_2. Since the base current is thus reduced, the collector current is also reduced. If the collector current gets lower than suitable for proper operation, the voltage across V_e also becomes low. This makes more biasing current flow into the base and less through R_2, which brings the collector current back up to proper operating value.

Figure 25 shows that the a-c signal currents also go through the emitter lead. Capacitor C_e in Fig. 26 provides a path for the signal so that it will not go through R_e. We want to bypass the signal around R_e for the same reason that we bypass the cathode bias resistor of a tube – so that the base bias current will not have an a-c component.

A variation of the above stabilization method is to omit R_2 and increase the resistance of R_1. Any increase in voltage drop across R_e means an increase in opposition to base current flow, so that the base current is reduced. Unless R_e is increased in size the stabilization obtained will not be as good as when R_2 is used.

OPERATION OF TUBES AND TRANSISTORS

EXAMINATION

Circle the number of the correct answer for each question that follows. When you are finished, transfer the answers to the answer sheet by putting X's in the proper squares. When the graded answer sheet is returned to you, correct in this book any questions you may have missed. By doing so, you will have a record of the correct answers to all questions for review purposes.

1. The pairs of wires carrying a-c heater currents in audio amplifiers are twisted together for one of the following reasons:
   (1) to save space
   (2) in order to recognize them more readily
   (3) to reduce hum
   (4) to make the circuit neater in appearance

2. Plate saturation is the condition when:
   (1) plate power dissipation is maximum recommended for tube type
   (2) secondary emission from plate equals cathode current reaching plate
   (3) plate current does not further increase when grid is made less negative
   (4) maximum plate voltage is used

3. In the filament-type vacuum tube it is most desirable to use an a-c filament supply because:
   (1) a d-c filament supply introduces hum
   (2) a d-c filament supply results in one side of the filament emitting more electrons than the other, which shortens tube life
   (3) a d-c filament supply has a ripple problem
   (4) a higher plate voltage must be used when a d-c filament supply is used

4. The getter in a vacuum tube is:
   (1) an electrode for refinement of the signal
   (2) an electrode to reduce hum
   (3) a capsule which absorbs any gas present in the tube
   (4) a capsule which maintains the tube at a constant temperature

5. Transmitting tube filaments should not be operated at lower than the recommended voltages because this could:
   (1) damage the grid and shorten tube life
   (2) cause excessive secondary emission

(3) cause an excessive space charge
(4) cause plate saturation to occur at low plate current, limiting output from tube

6. The polarity of the filament potential of high-power vacuum tubes should be periodically reversed, when a d-c filament supply is used, to avoid:
(1) the development of hum
(2) having one side of the filament always emitting the most electrons
(3) wearing down the d-c filament supply

7. The space charge in a vacuum tube consists of:
(1) a cloud of electrons surrounding the plate
(2) a cloud of electrons surrounding the getter
(3) a cloud of electrons surrounding the cathode
(4) a cloud of electrons surrounding the screen grid

8. When selecting a triode vacuum tube to be used as a voltage amplifier, the most important factor to be considered is:
(1) a high amplification factor
(2) a high transconductance
(3) a high plate power dissipation rating
(4) a low plate resistance

9. Refer to the three graphs in Fig. 28. Which graph indicates how the plate current varies with the plate voltage in a pentode if the grid bias remains constant?
(1) a (2) b (3) c

10. Refer to the three graphs in Fig. 28. Which graph indicates how the plate current varies with the plate voltage in a triode if the grid bias remains constant? v
(1) a (2) b (3) c

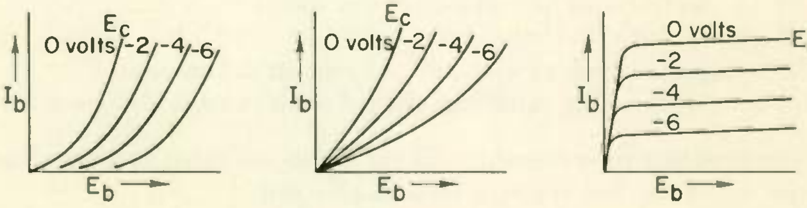

(a) (b) (c)

Fig. 28

11. If the d-c collector current is too high in Fig. 26 at all temperatures, you could lower it by
    (1) reducing the value of R_e.
    (2) reducing the value of R_1.
    (3) reducing the value of R_2.
    (4) increasing the value of R_2.

12. A "blocked grid" is that condition in which the control grid:
    (1) has a short-circuit path to ground and the grid is drawing current
    (2) has a short-circuit path to ground and is not drawing current
    (3) plate current is zero because of the use of too high a bias voltage
    (4) has accumulated a high negative charge because of having no d-c path to ground

13. Refer to circuits a, b, and c in Fig. 29. The grid bias for an indirectly heated cathode vacuum tube is obtained by use of a resistance in the cathode circuit of diagram:
    (1) a (2) b (3) c

14. Refer to the circuits shown in Fig. 29. The grid bias for the tube is obtained by use of a fixed voltage from the power supply in circuit:
    (1) a (2) b (3) c

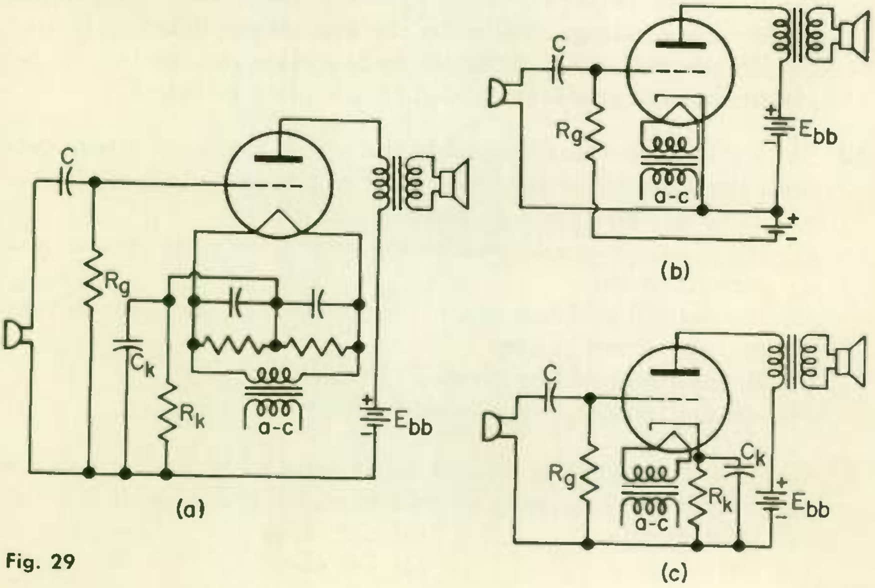

(a)

(b)

(c)

Fig. 29

15. Refer to the circuits shown in Fig. 29. The grid bias for a directly heated filament-type vacuum tube is obtained by use of a cathode resistor in diagram:
(1) a (2) b (3) c

16. The term "maximum plate dissipation" is:
(1) maximum amount of heat that can be safely dissipated by the plate.
(2) maximum amount of voltage that can be safely used on the plate.
(3) maximum amount of current that can be safely handled by the plate.
(4) maximum value of resistance that can be safely placed in series with the plate.

17. The purpose of the bypass capacitor connected across the cathode bias resistor in a vacuum-tube amplifier is:
(1) to develop a variable bias voltage
(2) to provide a high-impedance path for a-c
(3) to provide a low-impedance path for d-c
(4) to bypass the a-c around the bias resistor and thereby maintain a pure d-c bias voltage free of any a-c component

18. The method for the calculation of the cathode bias resistor for a triode amplifier is finding the quotient of:
(1) the plate voltage divided by the plate or cathode current
(2) the plate voltage divided by the desired grid bias
(3) the desired grid bias divided by the plate current
(4) the desired grid bias divided by the plate voltage

19. Since cathode current is equal to the sum of plate and screen current, the method for the calculation of the cathode bias resistor of a pentode amplifier is to find the quotient of:
(1) the plate voltage divided by the sum of the plate current and screen current
(2) the desired grid bias divided by the sum of the plate current and the screen current
(3) the desired grid bias divided by the plate current
(4) the desired grid bias divided by the screen current

20. If a bias of -6 volts is wanted, what value of cathode resistor is needed, if plate current is 40 ma and screen grid current is 5 ma?
(1) 1200 ohms (3) 133 ohms
(2) 150 ohms (4) 743 ohms

21. The tetrode vacuum tube consists of the following electrodes:
(1) cathode, control grid, and plate
(2) cathode and plate
(3) cathode, control grid, screen grid, suppressor grid, and plate
(4) cathode, control grid, screen grid, and plate

22. The chief purpose of the screen grid in a vacuum tube is to:
(1) reduce the plate-to-control grid capacitance
(2) reduce secondary emission
(3) reduce the control grid-to-cathode capacitance
(4) increase the amplification factor of the tube

23. The chief purpose of a suppressor grid in a multielement vacuum tube is to:
(1) increase electron velocity
(2) reduce secondary emission
(3) reduce plate-to-control grid capacitance
(4) reduce plate dissipation

24. The beam power tube differs from the ordinary pentode in that its electrodes are of heavier construction and:
(1) no control grid is required
(2) it is physically bigger in size
(3) it requires larger values of R_L
(4) no suppressor grid is required because of the concentrated beam of electrons flowing to the plate

25. Thyratron tube conduction is initiated by:
(1) making the grid more negative
(2) making the grid less negative
(3) increasing the plate voltage
(4) decreasing the plate voltage

26. Conduction in the thyratron tube is cut off by:
(1) making the grid more negative
(2) making the grid less negative
(3) increasing the plate voltage
(4) decreasing the plate voltage

27. The Tungar rectigon is a battery-charging rectifier tube which is capable of:
    (1) passing high current with low plate voltages
    (2) passing high current only with high plate voltages
    (3) passing only low values of current with high plate voltages
    (4) passing only low values of current with low plate voltages

28. The effect of secondary emission is most pronounced in the:
    (1) diode (3) tetrode
    (2) triode (4) pentode

29. The interelectrode capacitance between the control grid and plate is a major disadvantage of the:
    (1) diode (3) tetrode
    (2) triode (4) pentode

30. Larger values of amplification factor are usually obtained in the:
    (1) diode (3) tetrode
    (2) triode (4) pentode

31. The most desirable tube for high-frequency work is the:
    (1) diode (3) tetrode
    (2) triode (4) pentode

32. The kind of vacuum tube which responds to filament reactivation has filaments made of:
    (1) thoriated tungsten
    (2) oxide-coated metals
    (3) pure tungsten

33. The first step in the filament reactivation procedure is to apply:
    (1) a filament voltage for 30 min.
    (2) a filament voltage 30 per cent above normal for 20 min.
    (3) normal filament voltage for several hours
    (4) a filament voltage 75 per cent above normal for 3 min.

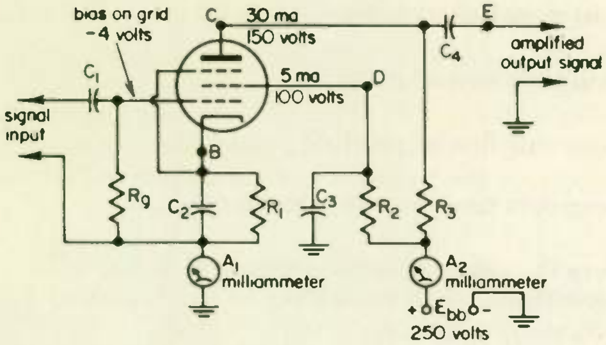

Fig. 30

34. The tube used in the amplifier circuit of Fig. 30 is a
(1) diode. (2) triode. (3) tetrode. (4) pentode.

35. The tube of Fig. 30 uses
(1) a directly heated cathode.
(2) an indirectly heated cathode with heater not shown.

36. The −4 volts bias shown for the control grid of Fig. 30 means that
(1) the grid is 4 volts negative with respect to ground.
(2) the grid is 4 volts negative with respect to cathode.
(3) the amplitude of the incoming signal is −4 volts.

37. When a-c and d-c currents travel on the same conductor, as is frequently the case in amplifier circuitry, the two currents together form
(1) a sine wave.
(2) a mixed current.
(3) a dual-purpose current.
(4) a pulsating current.
(5) a direct-alternating current.

38. What currents flow through resistor R_1 of Fig. 30?
(1) A-c only (2) D-c only (3) Both a-c and d-c

39. What currents flow through capacitor C_2 of Fig. 30? (Choose answer from selections for Question 38. Do the same for Questions 40 through 46.)

40. What currents flow through milliammeter A_1? ______

41. What currents flow through resistor R_2? ______

42. What currents flow at point B? ______

43. What currents flow at point *C*? ______

44. What currents flow at point *D*? ______

45. What currents flow at point *E*? ______

46. What currents flow through capacitor C_3? ______

47. What are the voltages on the screen grid of Fig. 30?
    (1) D-c voltage is 100; a-c is 250
    (2) D-c voltage is 250; a-c is 100
    (3) D-c voltage is 100; a-c voltage is also 100
    (4) D-c voltage is 100; a-c voltage is low, ideally zero volts.

48. How is the −4 volts bias to the grid in Fig. 30 obtained?
    (1) By the grid-leak action of R_g.
    (2) From the plate-cathode voltage drop.
    (3) From a separate battery or power supply, not shown in the figure.
    (4) By the voltage drop caused by cathode current flowing through R_1.

49. What is the resistance of R_3 in Fig. 30? (HINT: R_3 drops the supply voltage down to 150 volts at the plate.)
    (1) 2340 ohms
    (2) 2750 ohms
    (3) 3330 ohms
    (4) 5000 ohms
    (5) 8330 ohms
    (6) 20,000 ohms

50. What does meter A_1 read in Fig. 30?
    (1) 5 ma
    (2) 20 ma
    (3) 30 ma
    (4) 35 ma
    (5) 40 ma

51. With no input signal, the reading of meter A_2 in Fig. 30 fluctuates between zero and 2 ma. Which of the following could be the cause?
    (1) Capacitor C_2 is open.
    (2) Capacitor C_1 is open.
    (3) Resistor R_g is open.
    (4) Resistor R_1 is shorted.

52. What value should R_1 be in Fig. 30?
    (1) 114 ohms
    (2) 134 ohms
    (3) 800 ohms
    (4) 1140 ohms
    (5) 1340 ohms
    (6) 8750 ohms

53. What is the ideal reactance for capacitor C_2 to have in Fig. 30?
    (1) Zero ohms
    (2) Reactance should equal the resistance of R_1
    (3) Reactance should best be between two and three times the resistance of R_1.
    (4) Reactance should be many times greater than the resistance of R_1.
    (5) A reactance between 75 and 125 ohms gives best results in most circuits.

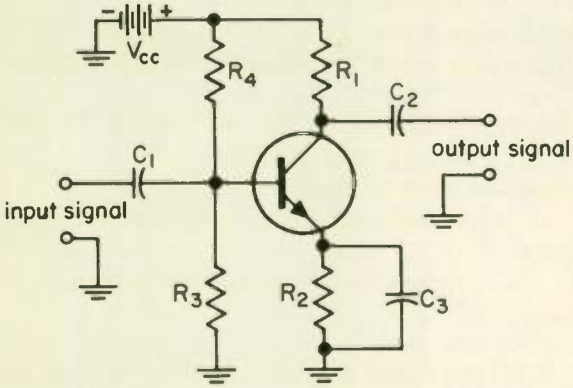

Fig. 31

54. What is the purpose of $R_2 - C_3$ in Fig. 31?
    (1) To provide bias to the base.
    (2) To improve the gain of the stage.
    (3) To equalize the amplifier so that it will have a more uniform gain for different frequencies.
    (4) To provide temperature stabilization.

55. Which three of the following changes will increase the collector current in Fig. 31. Mark *all three on your answer sheet.*
    (1) Increase the resistance of R_1
    (2) Increase the resistance of R_2
    (3) Increase the resistance of R_3
    (4) Increase the resistance of R_4
    (5) Decrease the resistance of R_2
    (6) Decrease the resistance of R_3
    (7) Decrease the resistance of R_4
    (8) None of the above changes will increase the gain

56. What value of grid bias voltage would you use in order to operate a 6J5 tube using 200 volts on the plate, if you want the plate current to be 8 ma?

(1) 0 volt
(2) −2 volts
(3) −3 volts
(4) −4 volts
(5) −6 volts
(6) −8 volts
(7) −10 volts
(8) −12 volts

END OF EXAM

LETTER SYMBOLS FOR AMPLIFYING DEVICES

Symbols used with electron tube circuitry

Subscripts used with reference to tube elements:
f filament *h* heater *k* cathode
c control grid (*g* for a-c component)
s screen grid (not an IEEE standard)
b anode or plate (*p* for a-c component)

Examples: I_b is the symbol for plate current, E_c is the symbol for grid bias voltage, and E_s is the screen grid voltage.

The grids in multigrid tubes can be distinguished by a numerical addition to the subscript, counting out from the cathode. Thus in a pentode tube, the subscript c_1 (or g_1) can be used for control grid, c_2 (or g_2) for screen grid, and c_3 (or g_3) for suppressor grid. If no numerical subscript is used reference to the control grid is assumed. Example: I_{c_2} can be used to designate the screen grid current in a pentode tube.

The pulsating voltage or current on plate and grid when a signal is being amplified consists of a d-c component and an a-c component (the signal). To distinguish between the two, *b* and *c* are used to indicate d-c values, and *p* and *g* to indicate a-c values. Examples: E_b is the d-c (that is average) value of the plate voltage, and E_p is the effective voltage value of the a-c signal component.

To distinguish between peak, average, and effective values, the symbols *m* (for maximum) and *av* (for average) are added to the subscripts. If nothing is added, effective values are implied. Examples: I_p is the effective value of the a-c component of the plate current, I_{pm} is the peak value, and I_{pav} is the average value.

The lower case letters *e* and *i* are used to indicate instantaneous values of voltage and current. Examples: i_p is the amplitude of the a-c component of the plate current at some specified instant during the cycle. e_b is the instantaneous value of the pulsating plate voltage (d-c plus a-c) at some specified instant during the cycle.

Symbols for semiconductor devices

Subscripts used:
E or *e* emitter *B* or *b* base *C* or *c* collector

These subscripts are used in a manner similar to that described for electron tubes, except for differences discussed below. With semiconductors the symbol *V*, rather than *E*, is used for voltage.

Use upper case subscripts to indicate d-c component (average) values, and lower case subscripts to indicate a-c component (signal) values. Examples: I_B is the d-c bias current for the base. I_b is the a-c (signal) component of the base current. V_C is the d-c value of the collector voltage.

The average or d-c value of voltage or current may be different when a signal is applied than with no signal. The symbol *Q* may be added to the suffix to indicate the d-c value with signal applied. Example: I_{EQ} is the average value of the emitter current with a signal being amplified.

As with tubes, the lower case letters *i* and *e* are used to indicate instantaneous values of current and voltage. If the accompanying subscript is lower case, the instantaneous value of the a-c component is indicated, and for an upper case subscript the instantaneous value of the pulsating wave (d-c plus a-c) is indicated. Examples: i_c is the value of the a-c component of the collector current at some specified moment of the signal cycle. i_C is the value of the pulsating collector current (d-c component plus a-c component) at some specified instant of the signal cycle.

Power supply symbols

The source of voltages for operating the various elements of tubes and semiconductors is indicated by doubling the subscript that pertains to the element that draws the most power from the supply voltage. Examples: E_{bb} is the supply voltage for the plate of an electron tube, and E_{cc} is the grid bias voltage source. V_{CC} is the supply voltage to the collector of a transistor, and V_{BB} is the supply voltage for the base.

CLEVELAND INSTITUTE OF ELECTRONICS / CLEVELAND, OHIO

electronics

CLEVELAND INSTITUTE OF ELECTRONICS / CLEVELAND, OHIO

How Tubes and Transistors Amplify

2403-3

An AUTO-PROGRAMMED® Lesson

ABOUT THE AUTHOR

Angelo C. Gillie attended Central Connecticut State College and the University of Connecticut where he received his Bachelor of Science and Master of Arts degrees respectively.

During World War II, Mr. Gillie served in the U. S. Navy where he was engaged in special assignments in anti-submarine warfare involving high frequency direction finding.

Mr. Gillie has written several textbooks including *Transistors, Electrical Principles of Electronics,* and *Principles of Electron Devices.*

Mr. Gillie is a member of the IEEE.

This text, *How Tubes and Transistors Amplify,* was technically edited by the Staff of Cleveland Institute of Electronics. Our purpose in this is to ensure that the text is easily understandable as well as accurate and up-to-date.

This is an AUTO-PROGRAMMED* Lesson exclusive with the Cleveland Institute of Electronics. It is your assurance of the finest in technical education and training.

**Registered Trademark*

Accredited by the Accrediting Commission of the National Home Study Council

The Accrediting Commission has been approved by the U.S. Office of Education as a "nationally recognized accrediting agency."

CLEVELAND INSTITUTE OF ELECTRONICS

How Tubes and Transistors Amplify

By ANGELO C. GILLIE, Ed.D.
Rutgers – The State University

2403-3

In this lesson you will learn...

In this modern plant transistors are manufactured in a dust-free atmosphere. Photo: courtesy, Raytheon Company.

THIRD EDITION/First Printing/August, 1967.

2403-3

A chat with your instructor

Vacuum tubes and transistors have many things in common. This is evident from the fact that transistors are now being used to perform circuit functions that were once performed only by vacuum tubes. In terms of circuit behavior, vacuum tubes and transistors possess striking similarities. Both types of control device require a d-c power supply to activate the device, i.e., to set the vacuum tube or transistor at a zero-signal condition; and both types require a bias voltage for the input terminals. By use of the d-c voltages, the resistance of the device at rest condition is established.

The similarity between the two devices continues even beyond this point. In both the transistor and the vacuum tube, the input signal is made to change the resistance of the device in step with the variations of the input signal. This action makes it possible for these two devices to amplify the input signal.

The transistor requires no heater, and that is a decided advantage from the standpoint of economy. Furthermore, a transistor does not have a "warm-up time." Because of its small size and low power requirement, the transistor is preferred over the vacuum tube in many applications. An indication of the usefulness of the transistor under even adverse conditions is the fact that more than 10,000 transistors are used in certain guided missiles.

The behavior of tubes and transistors is most easily understood by first studying the manner in which diodes function. Therefore, the first portion of this lesson examines both types of diode and several uses of them. Once you understand how the diode works and you are familiar with a few of its practical applications, you will be ready to look into the basic principles of amplification. These principles are carefully examined and practical examples which apply to both transistors and tubes are considered.

The last portion of the lesson deals with the use of the transistor and the vacuum tube as amplifiers. Although the two devices are treated separately, their similarities when used as amplifiers will be brought out.

How Tubes and Transistors Amplify

THE VACUUM-TUBE DIODE

1 THE USE OF THE HEATER FOR CATHODE EMISSION . . . The vacuum-tube diode consists of two basic electrodes: (1) the *cathode,* which emits electrons when heated, and (2) the *plate,* which attracts the electrons after they are emitted by the cathode. The diode's physical construction, basis of operation, and circuit symbol are shown in Fig. 1.

A heater is included in the diode to raise the temperature of the cathode to such point that electrons will leave the cathode surface. In Fig. 1, the heater is shown with its own voltage supply E_{ff}. When the heater supply E_{ff} is connected, current flows through the heater and the temperature of the heater is raised to a desired level.

The cathode is so constructed that it receives the heat given off by the heater, as shown in Fig. 1. The cathode temperature is raised by passing current through the heater, which enables electrons to "boil"

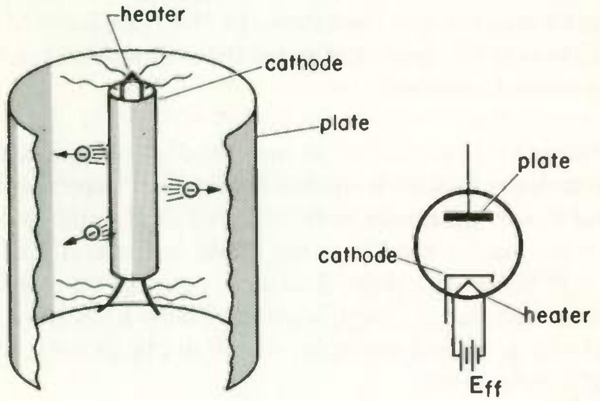

(a) Electrons are "boiled" off the hot cathode and are collected by the plate

(b) Conventional symbol for the vacuum diode

Fig. 1 **The vacuum-tube diode.**

out of the surface of the cathode. These electrons are then in the space surrounding the cathode and are free to flow to the plate, which is also called the *anode.*

The space between the cathode and plate is at reduced pressure or near-vacuum condition because electrons move easier in a vacuum.

WHAT HAVE YOU LEARNED?

1. Almost any metal will emit electrons provided it is heated to a high enough temperature. The (a) ____________ of the vacuum diode emits electrons because it is provided with a (b) ____________ to raise its temperature. The electrons emitted by the cathode are free to travel to the (c) ____________, or anode, of the diode because all or almost all of the (d) __________ between the cathode and anode has been removed.

ANSWERS

1. (a) Cathode; (b) heater; (c) plate; (d) air

2 CURRENT FLOWS ONLY WHEN THE PLATE IS POSITIVE . . .

Since cathode emission is produced by the application of heat to the cathode, it is called *thermionic cathode emission.* Figure 2 shows a diode in operation. Electrons move out of the hot cathode, through the vacuum to the plate, through the external circuit, and then back to the cathode. This flow of electrons constitutes a current which passes through the tube and around the external circuit. The path of this electron flow, or current, is shown by the arrows in Fig. 2.

Recall that electrons have a negative charge and can be attracted by a positive voltage because opposite charges attract. Therefore, the

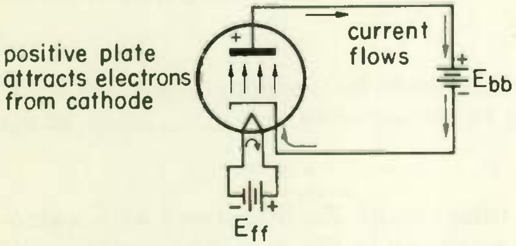

Fig. 2 **Electron flow in the diode.**

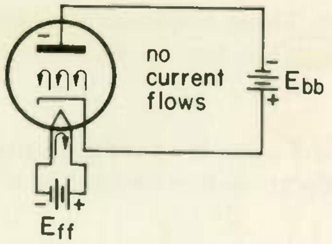

Fig. 3 **Diode circuit for nonconduction.**

plate, which serves as a collector for the cathode-emitted electrons, is connected to a *positive* voltage in Fig. 2. In this way, the cathode-emitted electrons feel an attraction for the plate and are pulled toward it, which results in a flow of current and tube conduction.

Since the plate is not heated, it cannot emit electrons. The only electrons which can flow are those emitted by the heated cathode. When the plate voltage is made *negative,* as shown in Fig. 3, the cathode-emitted electrons are repelled back to the cathode by the plate, since like charges repel, and no current whatsoever flows in the tube. The gap between the plate and cathode is then an open circuit for the negative plate voltage. Thus the diode has the property of passing current when a positive voltage, which attracts electrons, is connected to the plate and passing no current when a negative voltage, which repels electrons, is connected to the plate.

WHAT HAVE YOU LEARNED?

1. When a positive voltage appears on the plate of a vacuum-tube diode, the tube (a) *(does) (does not)* conduct current. This happens because the positive plate (b) ________________ the negative electrons emitted by the hot cathode.

2. If you wish the vacuum-tube diode to conduct current, the negative side of the voltage must be connected to the ____________ of the tube.

3. Figure 4 illustrates a rectifier circuit. E_{bb} is replaced with a sinusoidal source of a-c voltage as shown in Fig. 4(a). The waveform of the voltage across the load resistor R_L is shown in Fig. 4(c).

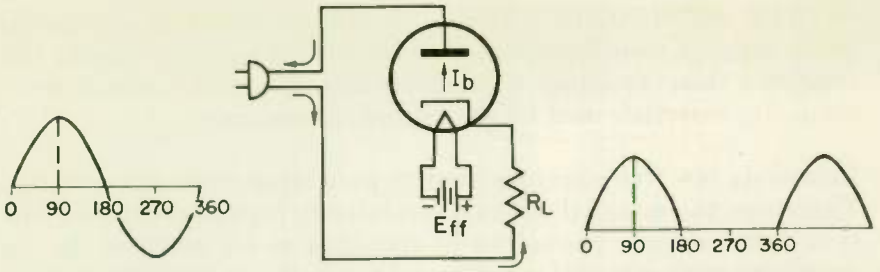

(a) Source voltage (b) Circuit (c) Voltage across R_L

Fig. 4 **A vacuum-tube diode, showing input and output waveforms.**

When the source voltage is between (a) ______ degrees and (b) ______ degrees of its cycle, the diode plate is positive with respect to the cathode and the tube (c) *(does) (does not)* conduct. Since R_L is in (d) *(parallel) (series)* with the diode, the tube current also flows through the load resistor. Hence the potential across R_L during the half cycle when the plate is positive will be (e) *(like the source voltage) (zero).*

When the source voltage is between (f) ______ degrees and (g) ______ degrees, the diode (h) *(does) (does not)* conduct because the plate of the tube is negative. Hence the voltage across R_L is (i) *(like the source voltage) (zero).* The overall action of the diode is to convert the a-c source voltage into a (j) *(a-c) (d-c)* output voltage which appears across R_L.

ANSWERS

1. (a) Does; (b) attracts 2. Cathode
3. (a) 0; (b) 180; (c) does; (d) series; (e) like the source voltage; (f) 180 (g) 360; (h) does not; (i) zero; (j) d-c

THE SOLID-STATE DIODE

There are several basic types of diodes. You have learned about the vacuum-tube diode in the preceding sections. Another type is the solid-state diode, the name frequently used to denote diodes which are made of semiconductor materials. One of the most common solid-state diodes is the PN junction diode. The sections which immediately follow lead up to an understanding of how this important type of diode performs and what some of its most common applications are.

3 N-TYPE SEMICONDUCTOR . . . A semiconductor is a material which displays more resistance than conductors but considerably less resistance than insulators. Germanium and silicon are common semiconductor materials used for diodes and transistors.

Relatively few free electrons exist in pure semiconductor material. Therefore, the material displays a relatively high resistance to current, but not quite enough to be classified as an insulator. In the pure form, such material is not useful for diodes or transistors. However, by blending in with the semiconductor material a small amount of a suitable impurity, the resistance of the semiconductor is lowered to better fit our electronic requirements.

Two basic types of materials, known as N and P types, can be blended with the pure semiconductor. The blending in of an N type, such as antimony, results in the creation of additional free electrons in the semiconductor material, thereby lowering its resistance. The resulting material is described as N type because conduction is by means of free electrons, which carry a negative charge.

Refer to Fig. 5, where a voltage is shown applied to an N-type semiconductor. Free electrons are available for current flow. The direction of the current is determined by the polarity of the external voltage, that is, away from the negative terminal and toward the positive terminal, since the positive terminal attracts electrons.

Note that the current in the N-type semiconductor is entirely due to the flow of the free electrons introduced into the pure semiconductor. The N-type crystal is also called the donor type, since it donates electrons.

WHAT HAVE YOU LEARNED?

1. A material which has its electrons so tightly bound to its atoms that no electrons are free to move about and carry current is called an (a) ________________. A material which has most of its electrons tightly bound but also has a few electrons free to carry current is called a pure (b) ________________. By blending in a different substance which adds free electrons, this material becomes a (c) ________-type semiconductor.

2. Current flow in the N-type crystal is the result of the flow of (a) __________ ______________ which were added to the (b) ______________ semiconductor during the manufacturing process. This current flows

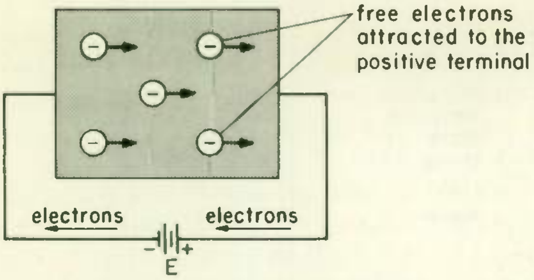

Fig. 5 Electron flow in N-type crystal.

from the (c) ________________ terminal to the (d) ________________ terminal of the external potential.

ANSWERS

1. (a) Insulator; (b) semiconductor; (c) N
2. (a) Free electrons; (b) pure; (c) negative; (d) positive

4 P-TYPE SEMICONDUCTOR . . . Instead of blending into the pure semiconductor a material which will add free electrons to the atoms and thus produce an N type, a different kind of substance can be blended in to produce the opposite effect and semiconductor type. In this case the material that is added will remove many of the tightly bound electrons and leave holes (empty spaces) where the electrons were. As you will see, these holes can be treated as positive charges within the material. This kind of semiconductor is called a P-type semiconductor, because conduction is by means of these positive charges.

Figure 6(a) illustrates how electrons are arranged in a pure semiconductor. Most of the electrons are like balls in a box—tightly packed and unable to move. Only a few electrons are on the top layer and

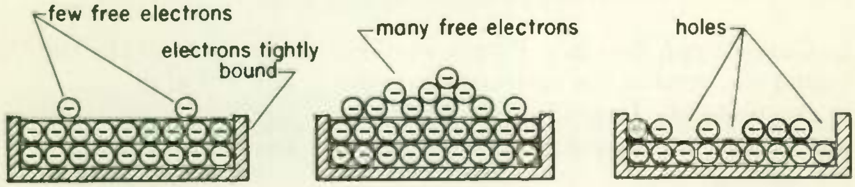

(a) Pure semiconductor (b) N-type semiconductor (c) P-type semiconductor

Fig. 6 Electrons in semiconductor material.

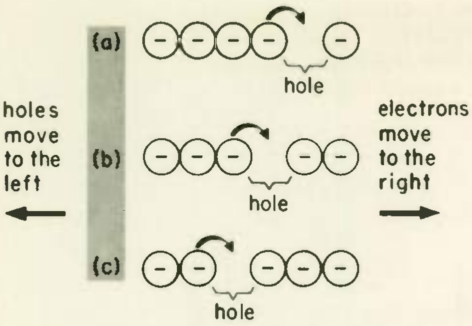

Fig. 7 As an electron moves to the right to fill a hole, the hole moves to the left.

free to move about. Figure 6(b) shows the N-type semiconductor with many more free electrons, and Fig. 6(c) shows the P-type semiconductor with holes where the tightly bound electrons have been removed.

Because a P-type semiconductor has holes, it can conduct current. Figure 7 shows how the electrons and holes can move in a P-type semiconductor. As an electron of the material moves to the right to fill a hole, it creates another hole in the place it left. In fact, you could say that the electron moved to the right and the hole moved to the left. Since the hole always moves in the direction opposite to that of the electron that created it, it acts as if it were a positive charge in the material. The current which flows in a P-type semiconductor does not depend on free electrons as in the case of the N type, but is due entirely to the tightly bound electrons moving in and out of the holes in the material—or just as well, the holes moving through the tightly bound electrons. That is, conduction is by the movement of positively charged holes.

WHAT HAVE YOU LEARNED?

1. Current can flow in a P-type semiconductor because the tightly bound electrons of the material can move in and out of (a) ______________ in the material. Instead of saying that the tightly bound electrons are moving in this case, you can instead say that the (b) ______________ are moving.

2. Since holes must always move in the direction opposite to that of electrons, holes have a (a) ______________ charge. If you connect a bat-

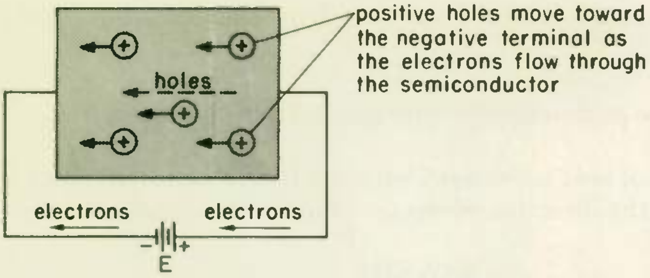

Fig. 8 **Hole current flow in P-type crystal.**

tery to a P-type semiconductor and find holes flowing from right to left, in which direction are the electrons moving through the semiconductor? (b) __________ ______ ___________.

ANSWERS

1. (a) Holes; (b) holes   2. (a) positive; (b) left to right

5 HOLE CURRENT . . . Figure 8 illustrates a P-type crystal with a potential across it. It is important that you recognize two things about *hole current:* 1. Hole current flows only in the semiconductor material. 2. The direction of hole current is toward the negative terminal of the voltage supply (since unlike charges attract).

Notice the electron current denoted by the arrows in the terminals of Fig. 8. The number of electrons involved in this current is equal to the number of holes involved in the hole current. Moving holes in one direction (such as from right to left in Fig. 8) is equivalent to moving electrons in the opposite direction. The P-type crystal is also called the acceptor type crystal, since it readily accepts electrons.

WHAT HAVE YOU LEARNED?

1. Both N-type and P-type semiconductors conduct current. In an N-type material the current is due to the flow of (a) __________ __________ which have a (b) __________ charge. In a P-type material the current can be thought of as being due to (c) __________ which have a (d) __________ charge.

2. Can holes flow out of a P-type semiconductor if you connect a battery to it? __________.

3. Does a P-type semiconductor have any free electrons to speak of? __________.

4. Does an N-type semiconductor have any holes to speak of? ________.

5. The direction of hole movement within a P-type semiconductor is ____________ to the direction of electron flow in the external circuit.

ANSWERS

1. (a) Free electrons; (b) negative; (c) holes; (d) positive
2. No . . . Holes are associated with atoms of the material whose tightly bound electrons have been removed. As the tightly bound electrons of the material move in and out of these holes the holes rearrange themselves in the semiconductor but can never leave it.
3. No . . . No substance has been added to the pure semiconductor to produce free electrons, only holes.
4. No . . . Only free electrons have been added to the N-type semiconductor.
5. Opposite

6 THE SEMICONDUCTOR PN DIODE . . . The semiconductor PN diode consists of a semiconductor material which is made to be a P-type crystal on one side and an N-type crystal on the other side. Figure 9 illustrates the semiconductor diode and its circuit symbol.

The N-type crystal corresponds to the cathode of a diode vacuum tube, since it has free electrons available. The P-type crystal corresponds to the anode, or plate, of a tube, because it readily accepts these electrons. *In the circuit symbol, the arrowhead represents the anode and points in the direction of hole flow, and opposite to the direction of electron flow.*

Since the N-type crystal (cathode) has free electrons, it is relatively easy to create an electron flow from the cathode to the anode. This current is called the forward current, and the diode has a low resist-

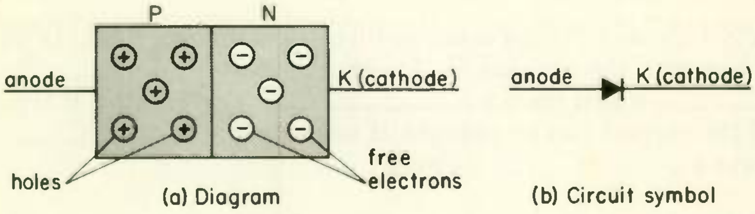

(a) Diagram (b) Circuit symbol

Fig. 9 The semiconductor diode.

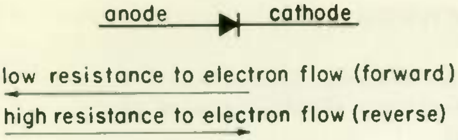

Fig. 10 **Diode resistance to electron flow.**

ance when current is flowing in this direction. On the other hand, it is very difficult to establish electron flow from the P-type crystal (anode) to the cathode because of the scarcity of free electrons in the P-type material. This is called reverse current. Forward and reverse current flow are diagrammed in Fig. 10.

Although the P-type semiconductor contains mostly holes, an extremely small number of free electrons are present in it. Consequently, the reverse current, although very small, is not zero. The diode has a very high resistance in this reverse direction.

WHAT HAVE YOU LEARNED?

1. Figure 11(a) shows a semiconductor diode connected to a battery. The current through the diode is (a) *(high) (very low)*. When the battery is connected like this, the diode resistance is (b) ________. When the battery is connected as in Fig. 11(b), the diode current is (c) *(high) (very low)*. When the battery is connected like this, the diode resistance is (d) ________ ________.

2. The current that flows when the diode is connected as in Fig. 11(a) is called the (a) ________ current, and the current when the diode is connected as in Fig. 11(b) is the (b) ________ current. Vacuum-tube diodes and semiconductor diodes differ in that when you apply a negative voltage to the anode (plate) of a vacuum tube, (c) ________ current flows, while a (d) ________ ________ current flows when a negative voltage is connected to the anode of a semiconductor diode.

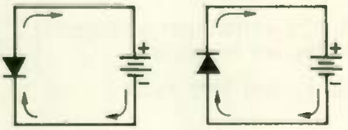

Fig. 11 (a) (b)

ANSWERS

1. (a) High . . . A diode conducts freely when the direction of electron flow is opposite to the direction in which the arrow of the diode symbol points.
   (b) low; (c) very low; (d) very high
2. (a) Forward (b) reverse . . . It is also called the back current.
   (c) zero; (d) very small

7 THE SEMICONDUCTOR DIODE AS A RECTIFIER . . . Figure 12 illustrates a semiconductor rectifier circuit which is being used to convert a-c to pulsating d-c to charge a 20-volt storage battery. The source voltage is stepped down from 115 volts to 20 volts by the transformer. The voltage applied to the diode is shown at the secondary. During the first half-cycle shown in Fig. 12(a), this voltage makes the diode arrow anode (the arrow of the symbol) negative, and a very small value of reverse current is developed. This reverse current is usually so small that it can be neglected when analyzing the action of the circuit. Recall that it is small because the anode is a P-type crystal, which has practically no free electrons. Therefore the output voltage applied to the storage battery, for the first half-cycle, is just about zero.

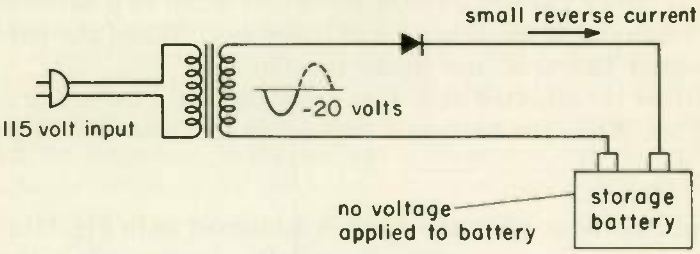

(a) First half-cycle

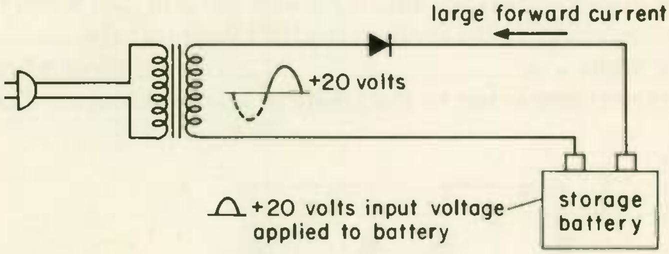

(b) Second half-cycle

Fig. 12 Circuit for using a PN diode to charge a storage battery.

During the second half-cycle of the applied voltage, Fig. 12(b), the anode is made positive, which causes forward current to flow. Since this is the low-resistance direction of the diode, the value of this current will vary exactly as the applied voltage varies. Hence the output voltage applied to the battery is just like the applied voltage.

PN diodes have such a low resistance in the forward direction (a few ohms) and such a high resistance in the reverse direction (a few megohms) that they can almost be considered as switches. When a positive voltage is connected to the arrow, or anode, the resistance is very small and the diode is a closed switch, or almost a short circuit. On the other hand, when a negative voltage is connected to the arrow, the resistance is very large and the diode is an open switch or open circuit to the applied voltage. Thus in Fig. 12(a) the switch is open, and in Fig. 12(b) the switch is closed.

WHAT HAVE YOU LEARNED?

1. Diodes are often used to "steer" currents so that they follow a desired path. Figure 13 shows a circuit in which two diodes are used so that two light bulbs can be lit independently of one another through one pair of wires. When the switch *S* is thrown to the left, current direction is as indicated by the (a) *(light) (heavy)* arrows. Diode (b) ________ conducts freely, and bulb (c) ________ lights. The other bulb does not light because the other diode has a (d) ________ resistance to current flow in this direction. When switch *S* is thrown to the right, the current direction is as indicated by the (e) *(light) (heavy)* arrows. Bulb (f) ________ lights and the other bulb (g) *(does) (does not)* light.

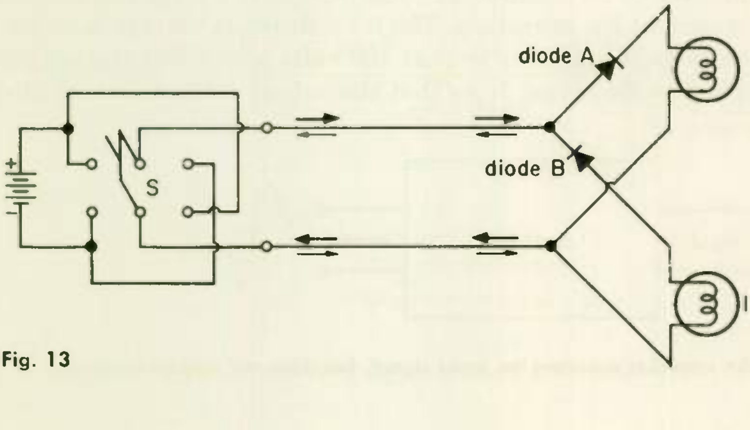

Fig. 13

1. (a) Light; (b) *A;* (c) *A;* (d) high; (e) heavy; (f) *B;* (g) does not

AMPLIFICATION

In the following sections you will learn about those aspects of amplification which are common to all types of amplifiers. The heart of any amplifier is the amplifying device, which can be a transistor or vacuum tube. Both of these components behave in the same basic way, as will be analyzed in the following sections.

8 WHAT AMPLIFICATION IS . . . In electronics, amplification means to produce an enlargement of an a-c current and/or voltage, as shown in Fig. 14. The amplifier of Fig. 14 has two terminals for the input a-c signal and two terminals for the output a-c signal. Because of the action of the amplifying device contained in the block labeled "amplifier," the a-c signal passing out of the circuit is larger than the a-c input signal. This is the basic concept of all amplifiers.

9 VOLTAGE, CURRENT, AND POWER AMPLIFIERS . . . Amplifiers are divided into three types: (1) voltage amplifiers, which are designed to amplify voltage; (2) current amplifiers, which are designed to amplify current; and (3) power amplifiers, which amplify both current and voltage simultaneously. Figure 15 shows the difference between these three types of amplifier. A microphone which produces a sinusoidal voltage of 0.1 volt is connected to the input of each amplifier. In each case the microphone supplies 1 μa (microampere) of current to the input.

Now, the circuit of Fig. 15(a) contains a voltage amplifier whose output is connected to an oscilloscope, which requires a large voltage but very little current for operation. The 0.1-volt input voltage is amplified by the voltage amplifier so that 100 volts appears at the output and is applied to the scope. Note that the output current flowing into

Fig. 14 An amplifier enlarges the input signal, but does not change its shape.

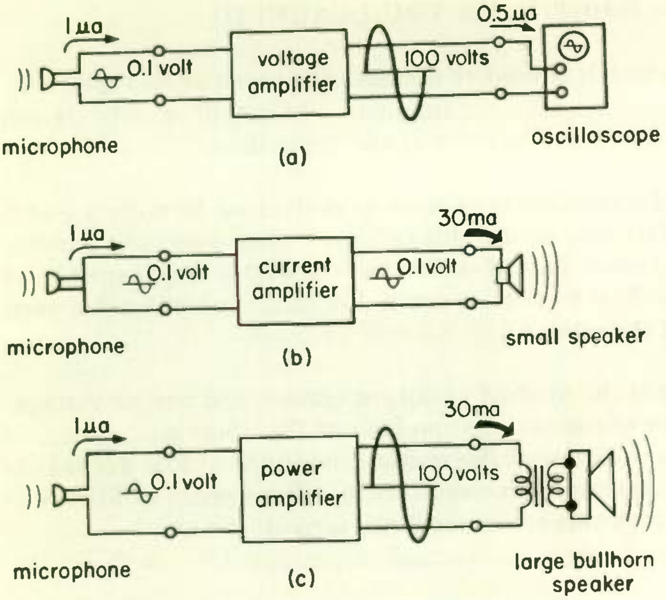

Fig. 15 **Comparing voltage, current, and power amplification.**

the oscilloscope is only 0.5 μa, which is less than the 1-μa input current. You can see that the input current has not been amplified at all; in fact in this particular example, it has been reduced from 1 μa at the input to 0.5 μa at the output. Voltage amplifiers are used when voltage amplification is needed but current amplification is not.

Figure 15(b) shows the opposite situation in which a current amplifier is used to amplify the 1-μa input current to a value of 30 ma (milliamperes) which is supplied to a small speaker. Notice that the 0.1 volt which appears at the input also appears across the output, so that the input voltage is not amplified at all. This type of current amplifier, then, is used when the input current must be amplified but the input voltage need not be.

Finally, Figure 15(c) shows a power amplifier supplying a large bullhorn speaker. Since output power depends on the product of output current and output voltage, a power amplifier must amplify both current and voltage. The 0.1-volt input is raised to 100 volts by the amplifier while, at the same time, the input current is amplified to a value of 30 ma.

WHAT HAVE YOU LEARNED?

1. An amplifier which is used to increase the value of an input voltage is called a (a) ______________ amplifier. The amplifier (b) *(is) (is not)* used to amplify the input current at the same time.

2. A certain radio receiver is capable of delivering 10 volts a-c at 1 ma of current. You wish to use this receiver to trip a relay in a radio-controlled model boat. The relay you have available requires 10 volts at 10 ma to trip. You must then use a __________ amplifier between the receiver and the relay.

3. Output power is the product of output current and output voltage. The output power of the voltage amplifier of Fig. 15(a) is (a) ________ watts. The output power of the current amplifier of Fig. 15(b) is (b) ________ watts. The output power of the power amplifier of Fig. 15(c) is (c) ________ . Which power output is the largest and why? (d) ________
____ .

ANSWERS

1. (a) Voltage; (b) is not
2. Current . . . Voltage amplification is not required because you already have enough voltage for the relay.
3. (a) 0.5×10^{-4} . . . (100 volts) × (0.5 μa) = (10^2 volts) × (0.5×10^{-6} amp) = 0.5×10^{-4} watts
    (b) 3×10^{-3}; (c) 3 watts
    (d) The output of the power amplifier is largest because both current and voltage are amplified in a power amplifier.

10 CALCULATING AMPLIFICATION . . . The amount of amplification produced by a given amplifier is given by the ratio of a-c output to a-c input:

$$\text{amplification} = \frac{\text{a-c output}}{\text{a-c input}}$$

Since there are three kinds of amplifiers, there are three kinds of amplification ratios. For a voltage amplifier you must take the ratio of a-c output voltage to a-c input voltage; for a current amplifier you must take the ratio of a-c output current to a-c input current; and for a power amplifier you must take the ratio of a-c output power to a-c input power.

The symbol A is frequently used to denote amplification, and a subscript v, i, or p is added to distinguish voltage, current, and power amplification, respectively. The three separate formulas for amplification are written below, but you can see they are all the same: a-c output over a-c input.

$$\text{voltage amplification} = A_v = \frac{\text{a-c output voltage}}{\text{a-c input voltage}}$$

$$\text{current amplification} = A_i = \frac{\text{a-c output current}}{\text{a-c input current}}$$

$$\text{power amplification} = A_p = \frac{\text{a-c output power}}{\text{a-c input power}}$$

The word "gain" is sometimes used instead of "amplification," since these ratios tell you how much the input signal is being increased. For example, an amplifier giving a voltage amplification of 10 has 10 times as much output voltage as input voltage, so you have essentially "gained" 10 times the input voltage in the amplification process.

WHAT HAVE YOU LEARNED?

1. If a 1-volt input signal is applied to a voltage amplifier having a gain of $A_v = 5$ and also to an amplifier having a gain $A_v = 10$, the amplifier having the gain of $A_v =$ ______ will have the larger output voltage.

2. The voltage amplification of the circuit shown in Fig. 15(a) is ______________.

3. The current amplification of the circuit shown in Fig. 15(b) is ______________.

4. The power amplification of the circuit shown in Fig. 15(c) is ______________.

ANSWERS

1. 10 . . . This amplifier has twice as much gain.
2. 1000 . . . $A_v = \dfrac{100 \text{ volts}}{0.1 \text{ volts}} = 1000$

3. 30,000 . . . $A_i = \frac{30 \text{ ma}}{1\ \mu\text{a}} = \frac{3 \times 10^{-2} \text{ amp}}{10^{-6} \text{ amp}} = 30{,}000$

4. 30,000,000 . . .

input power $= (0.1 \text{ volt}) \times (1\ \mu\text{a}) = (0.1 \text{ volt}) \times (10^{-6} \text{ amp}) = 10^{-7}$ watts

output power $= (100 \text{ volts}) \times (30 \text{ ma}) = (100 \text{ volts}) \times (3 \times 10^{-2} \text{ amp}) = 3$ watts

$$A_p = \frac{3 \text{ watts}}{10^{-7} \text{ watts}} = 30{,}000{,}000$$

AMPLIFYING DEVICES

11 WHAT AN AMPLIFYING DEVICE IS . . . An amplifying device is an electronic device which acts like a variable resistor.* The chief difference between this kind of variable resistor and the ordinary type with which you are familiar is that its ohmic value can be changed by an a-c signal. Transistors and vacuum tubes are amplifying devices.

Figure 16 illustrates the effect of the a-c input signal on the resistance of the amplifying device. Notice that the center arm is connected to the bottom of the potentiometer, thereby shorting out the resistance between those two points. The resistance of the amplifying device is that seen between the center arm and the top of the potentiometer. When the input signal is zero, R_1 is set at point A and is constant. When the input signal is positive, R_1 is reduced, which is the same as moving the center arm of the potentiometer to point B. A negative input signal increases R_1, similarly to moving the center arm of the potentiometer to point C. The action of the input signal on R_1 is conveniently depicted by a little man (which represents the input signal) changing the center arm of the potentiometer with the changes of input signal.

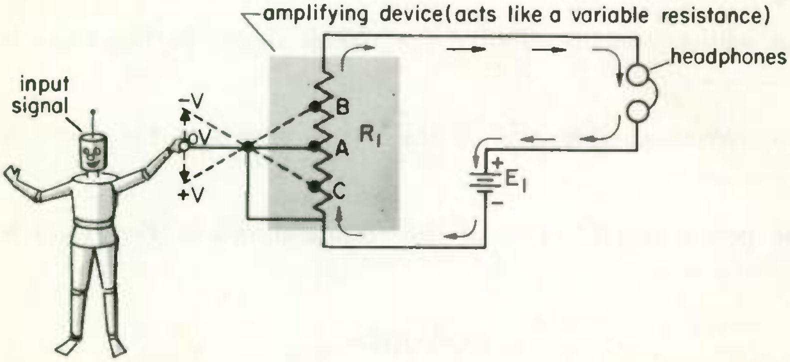

Fig. 16 Input signal varies resistance of amplifying device (tube or transistor), thereby causing current through headphones to vary in accordance with input signal variations.

---

*A variable resistor is one with a sliding electrical contact that can be used to vary the resistance. If the variable resistor has three connections, one at each end and one at the sliding contact, it is called a potentiometer.

E_1 is a d-c supply which the control device requires for operation, and the headphones are connected in series with E_1 and the control device. Since E_1 is a steady d-c voltage and the headphones have a fixed impedance, the variations of current will be determined by the changes in R_1. Hence the a-c input signal changes produce changes in the headphones current, thereby causing the headphones to reproduce the sense of the input signal.

WHAT HAVE YOU LEARNED?

1. A tube or transistor acts like a (a) ____________ ____________, represented in Fig. 17 by (b) ________. When an a-c signal is applied to the input of a tube or transistor, the resistance of the tube or transistor (c) __________.

2. In Fig. 17 the current through the headphones when there is no input signal is 10 ma. When the sinusoidal input signal shown is applied, the headphones current varies a maximum of 4 ma from the no-input-signal value. At point *A* of the input signal, the headphones current in milliamperes is (a) ________ ma; at point *B*, (b) ________; at point *C*, (c) ________; at point *D*, (d) ________; and at point *F*, (e) ________. At point *E* the current is approximately (f) ________ milliamperes.

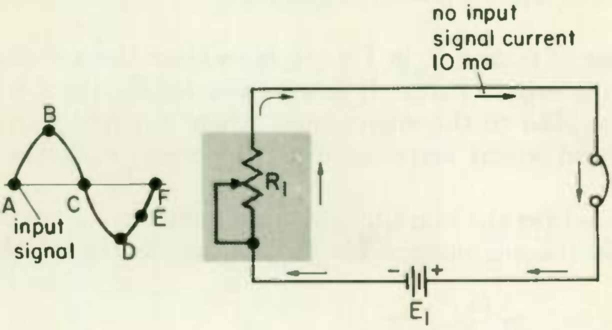

Fig. 17

ANSWERS

1. (a) Variable resistor; (b) R_1; (c) varies
2. (a) 10 ma . . . Input signal is zero at this moment.
 (b) 14 ma . . . Input signal is maximum positive value, reducing R_1 the maximum amount. Since resistance is minimum, current is maximum, or 10 ma + 4 ma = 14 ma.
 (c) 10 ma (d) 6 ma . . . Input signal is maximum negative value, making

R_1 maximum, and current minimum. 10 ma − 4 ma = 6 ma.

(e) 10 ma (f) 8 ma . . . Input signal at moment *E* of the cycle is about halfway between maximum negative value at point *D* and zero value at point *F*. Hence, current is one-half of 4 ma, or 2 ma, below no-signal value. 10 ma − 2 ma = 8 ma.

12 THE BASIC AMPLIFIER INPUT CIRCUIT . . . You have seen in Fig. 16 how the input signal varies the resistance of the amplifying device. The value of the variable resistance R_1 depends upon the input voltage to the amplifying device. For the tube or transistor to amplify best, there is a certain best range of values for R_1 when there is no input signal. By applying a suitable d-c voltage, as well as the signal, to the input, the range of resistance values over which R_1 varies will be that for best operation of the amplifying device.

In Fig. 18, battery E_1 supplies the d-c input voltage to the amplifying device. Its voltage value is important, since the average value of the resistance of the amplifying device, R_1 in Fig. 16, depends upon the voltage of E_1. The a-c signal is supplied by the microphone. Trace the path of both the a-c signal and the d-c voltage, and note that both are applied to the input of the amplifying device.

You have previously learned how an a-c voltage and a d-c voltage mixed together give a pulsating d-c voltage. The composite voltage applied to the input is shown in Fig. 19.

The purpose of C_1 and L_1 in Fig. 18 is to steer the a-c and d-c voltages into the desired paths. If it were not for C_1, the d-c voltage V_1 would be applied to the microphone, where it might cause improper operation and would certainly draw unnecessary current from E_1.

If it were not for the blocking action of inductor L_1, most of the a-c signal from the microphone would take the easier path through the

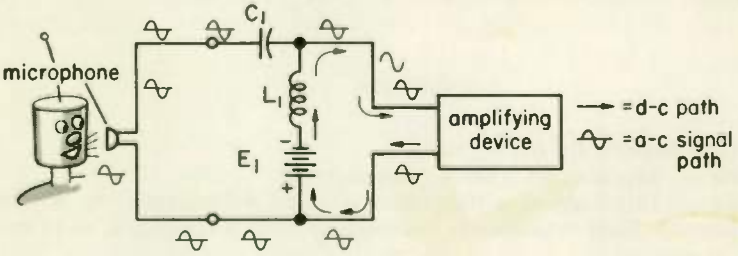

Fig. 18 The basic amplifier input circuit.

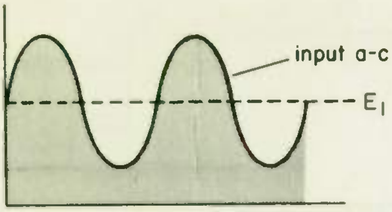

Fig. 19 **Composite input voltage.**

battery, rather than going to the amplifying device. Thus a very weakened a-c signal would be applied to the input of the amplifying device.

Notice in Fig. 19 how the a-c signal varies the composite input voltage. When the a-c is positive, it is series-adding to E_1 resulting in a larger positive voltage. A smaller composite voltage is obtained when the a-c is negative.

WHAT HAVE YOU LEARNED?

1. Refer to Fig. 20. Assume the input circuit of an amplifier has a d-c bias of 5 volts (that is, E_1 in Fig. 18 is 5 volts) and an a-c input signal of 2 volts peak value. The composite input voltage when the a-c is zero is (a)________ volts. At this time R_1 in Fig. 16 is at its (b) *(maximum) (average) (minimum)* ohmic value. When the composite input voltage is 7 volts, the a-c signal is (c)____________ volts peak or (d) __________ volts rms. At this time R_1 is at its (e) *(maximum) (average) (minimum)* ohmic value. The amplifying device resistance is at its largest ohmic value when the composite input potential is (f) ______ volts and the a-c input is (g) ________ volts (max).

2. A device that blocks d-c but passes a-c is a (a) ______________, and a device that blocks a-c but passes d-c is a (b) ______________. The d-c is kept out of the microphone in Fig. 18 by (c) ________, and most of the a-c is kept out of the battery by (d) ________.

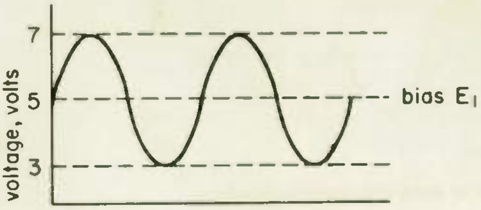

Fig. 20

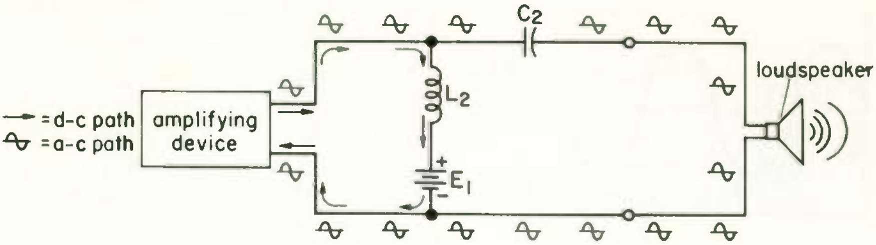

Fig. 21 **Basic amplifier output circuit.**

ANSWERS

1. (a) 5; (b) average; (c) 2;
   (d) 1.414 . . . Multiply peak by 0.707 to get rms or effective value.
   (e) Minimum; (f) 3; (g) −2
2. (a) Capacitor; (b) inductor; (c) C_1; (d) L_1

13 THE BASIC AMPLIFIER OUTPUT CIRCUIT . . . The basic amplifier output circuit also has both d-c and a-c currents, as shown in Fig. 21. E_1 is a d-c potential required for the operation of the amplifying device, as was explained with reference to Fig. 16. The current flowing through the amplifying device will have the waveform shown in Fig. 22.

The variations in the output current follow the changes in R_1, Fig. 16, caused by the a-c input voltage. When R_1 is decreased (by a positive input voltage), the output current increases from 0 to A. Likewise, when the output current decreases from 0 to B, the R_1 increase (by a negative input voltage) causes it. The output current at point 0 is that value which will flow when the input signal is zero. As seen in Fig. 22, the output current variations "ride" on the zero-signal output current.

You have learned how a pulsating current, such as shown in Fig. 22, is equal to a d-c current and an a-c current combined. The a-c cur-

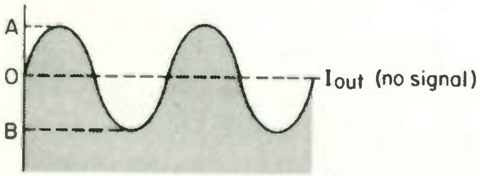

Fig. 22 **Composite output current waveform.**

rent in Fig. 22 represents the signal, which we wish to go to the loudspeaker, Fig. 21. Capacitor C_2 in Fig. 21 blocks the d-c component of the composite output waveform while allowing the a-c signal component to go to the loudspeaker. Inductor L_2 passes the battery current (that is, the d-c component) to the amplifying device, but keeps most of the a-c component from passing through the battery and thereby forces the a-c component through C_2 to operate the loud speaker. Study carefully the a-c and d-c component paths in Fig. 21.

WHAT HAVE YOU LEARNED?

1. Refer to Fig. 23. The zero-signal output current is (a) ______ milliamperes. The signal current is (b) ______ milliamperes (peak) and (c) ______ milliamperes rms. The change in current from 100 ma to 80 ma was caused by R_1 (d) *(increasing) (decreasing)* in value, and the change from 100 ma to 120 ma was caused by R_1 (e) ______ ______. Assuming ideal conditions, the current flowing through C_2 is (f) ______ milliamperes rms and the current through L_2 is (g) ______ milliamperes.

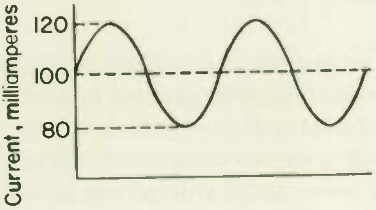

Fig. 23

2. In Fig. 21 a signal is applied to the input of the amplifying device, but the output from the loudspeaker is inaudible. What are two possible causes of the trouble? Assume the amplifying device and speaker are working properly.

ANSWERS

1. (a) 100; (b) 20; (c) 14.14; (d) increasing; (e) decreasing; (f) 14.14; (g) 100
2. Inductor L_2 is shorted so that the a-c component is shorting through E_1, rather than going to the loudspeaker. The other possibility is that C_2 is open.

14 REPLACING THE INDUCTOR IN THE INPUT CIRCUIT . . . In most low-power circuits it is practical to replace the input circuit inductor L_1 of Fig. 18 with a high-resistance resistor, as shown in Fig. 24. The purpose of L_1 in the circuit of Fig. 18, you will remember, is

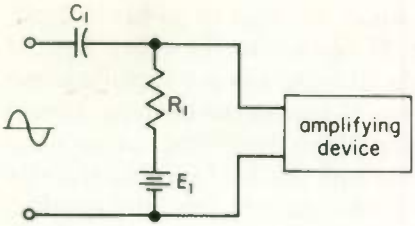

Fig. 24 The input circuit with a resistor.

to present a high impedance to the input in series with E_1, so that the signal will not short through the battery. A high value of resistance will, of course, also keep the a-c signal from shorting through the battery. The resistor, however, also offers a high resistance to the d-c voltage, which the inductor did not.

In Fig. 24 the d-c voltage applied to the input of the amplifying device is the voltage of E_1 minus the voltage drop across R_1. However, when the amplifying device is a vacuum tube, no current from the battery is drawn through R_1, so that the voltage drop across R_1 is zero. Hence, the d-c voltage applied to the input of the vacuum tube is the same as the voltage of E_1.

Inductors dissipate no power when a voltage is applied to them. Even though R_1 is chosen large enough to present a large impedance to the a-c input signal, this signal will dissipate some power in R_1, which would not be the case if a choke were used. With large power-handling tubes, there may be considerable power loss with a resistor, so that it is better to use a choke as in Fig. 18.

When the amplifying device in Fig. 24 is a transistor, d-c current *will* flow through R_1, so that the input d-c voltage to the amplifying device will be much less than E_1. However, only a very low d-c voltage (perhaps 0.2 volt) is needed at the input to a transistor. By using a battery of several volts for E_1, most of the voltage can be lost in R_1 and there will still be enough d-c voltage left for the input needs of the amplifying device.

The advantage in using a resistor in place of an inductor in the input circuit to an amplifying device is that resistors are cheaper, lighter, and take up less space than inductors. A resistor will always be used when the power losses are only minor.

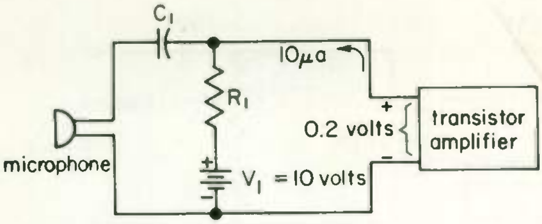

Fig. 25

WHAT HAVE YOU LEARNED?

1. Figure 25 shows how a resistor is used to replace an inductor in the input circuit to a transistor amplifier. The supply V_1 is 10 volts, but only 0.2 volt is needed to bias the input to the amplifier. The resistor R_1 must then drop 10 volts − 0.2 volt = 9.8 volts. If the transistor amplifier draws 10 μa through R_1, then R_1 must have a value of (a) ________________ to produce the 9.8-volt drop. Does this value of R_1 present a high impedance to the a-c input signal from the microphone passing through C_1? (b) __________ .

ANSWERS

1. (a) 980 kilohms; (b) yes

15 REPLACING THE INDUCTOR IN THE OUTPUT CIRCUIT . . .

Resistors can also be used to replace inductors in the output circuits of amplifiers. Figure 26 shows the amplifying device with L_2 of Fig. 21 replaced by a resistor R_L. Just as in the input circuit, R_L must be made large enough that it presents a fairly high impedance to the a-c output of the amplifier, thereby forcing most of the output signal to take the easier path through C_2. Again the resistor has the property that it will also present impedance to the d-c supply voltage E_1. This fact must always be taken into account, since both tubes and transistors must draw d-c current in their output circuits. This current will

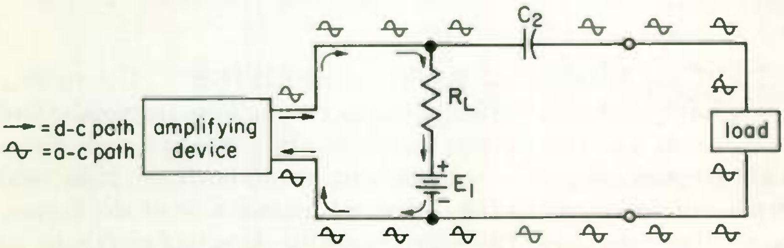

Fig. 26 The output circuit with a resistor.

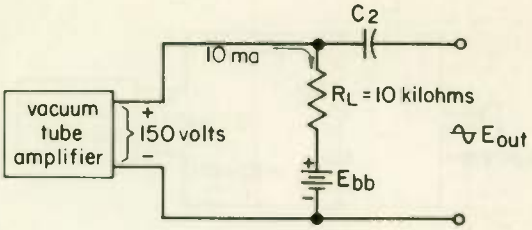

Fig. 27

cause a voltage drop across R_L so that the full E voltage no longer appears across the amplifying device, as it does when an inductance is used instead of R_L. Therefore, E must be chosen large enough to overcome the d-c voltage drop across R_L and still provide sufficient d-c voltage to the amplifying device for proper operation.

WHAT HAVE YOU LEARNED?

1. Figure 27 shows a resistor used to replace a choke in the output circuit of a vacuum-tube amplifier. You find that this amplifier needs 150 volts d-c at its output terminals and will draw 10 ma of d-c current through R_L. Since you want R_L to present a large impedance to the a-c output of the amplifier, you choose it to be 10 kilohms. How big must the supply voltage E_{bb} be for the amplifier to operate properly? (a) ____________ .If an inductor were used in place of R_L, the proper value for E_{bb} would be (b) ________ volts.

ANSWERS

1. (a) 250 volts . . . Since 10 ma flows through the 10,000 ohms of R_L, the resistor will have a 0.01 × 10,000 = 100-volt drop across it. The tube needs 150 volts for operation, so you need 100 + 150 = 250 volts supply to overcome the 100-volt drop in R_L and still have 150 volts on the amplifier.

(b) 150 . . . The d-c voltage lost across an inductor is negligible.

16 THE THREE-TERMINAL BASIC AMPLIFIER . . . Up to this point, you have analyzed the amplifier as having four terminals; two input terminals and two output terminals. In actuality, only three terminals are used, since the bottom terminal of both the input and the output are connected to the common (ground) side of the circuit. Figure 28 illustrates how there are actually three terminals to an amplifier.

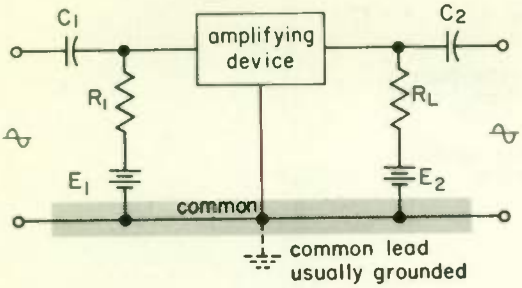

Fig. 28 The three terminal amplifier.

Notice that the terminal connected to common serves as the bottom terminal for both the input and output circuits. The common is the chassis in many cases. This is actually done in practice because both the transistor and the vacuum tube are essentially three-terminal amplifying devices. The action of the bias and input signal upon the amplifying device and its output is identical to what you studied in the preceding sections.

THE TRANSISTOR AMPLIFIER

The advent of the transistor started a new trend in the field of electronics in the area of minimization. The external action of the transistor has many similarities to the action of the vacuum tube. Among the many advantages of the transistor over the vacuum tube are its small size, instantaneous operation, and lack of need for a heater power supply. Computers which once required large rooms for housing can now be enclosed in spaces smaller than a typical desk. Radio receivers are now portable to the extent that pocket-size models are commonplace.

In this section, you will learn how to apply the basic concepts of amplification to those circuits in which the control device is a transistor. You will note that the transistor behaves as a resistor whose ohmic value is varied by the a-c input signal.

17 THE PHYSICAL CONSTRUCTION OF THE TRANSISTOR . . . The transistor is composed of three regions of semiconductor material. The two outside regions consist of the same type of crystal, while the middle region is the opposite type of crystal. This means that there are two transistor types, as shown in Fig. 29. When the two outside regions are N type, the middle region is the P type, and we

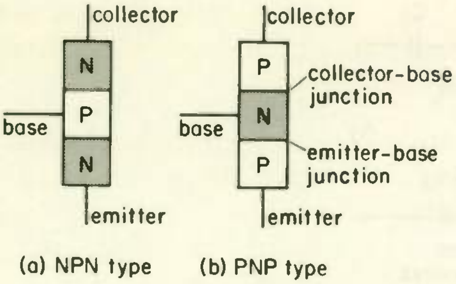

Fig. 29 **The two transistor types.**

have the NPN transistor. When the two outside regions are P type crystal and the middle region is the N type, the transistor is the PNP type. Both transistor types are common.

A lead is attached to each of the regions, as shown in Fig. 29. The *base lead* is connected to the middle region; the *emitter lead* is connected to the bottom region; and the *collector lead* is connected to the top region. The collector and emitter, although the same type of material, differ in that the semiconductor material of the emitter has more impurities than the collector material has. In the most common type of transistor amplifier, the emitter is the common terminal (like the common terminal of the three-terminal amplifying device in the preceding section). This is shown in Fig. 30. You will also notice that the input terminal is the base and the output terminal is the collector.

WHAT HAVE YOU LEARNED?

1. In the NPN transistor, the base is a (a) ________ -type crystal, the collector is a (b) ________ -type crystal, and the emitter is a (c) ________ -type crystal.

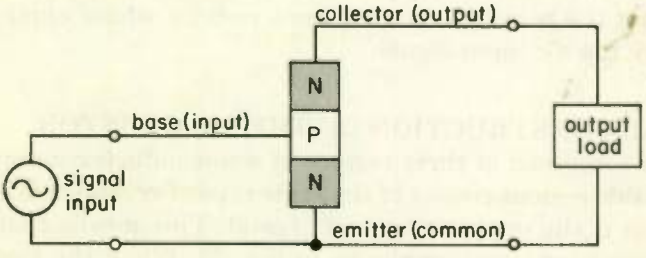

Fig. 30 **Designation of transistor terminals.**

2. The (a) ____________ and ____________ regions are of the same type of crystal—whether N or P—in all transistors, while the (b) ________ region is the opposite type of crystal.

3. The input a-c signal is applied to the (a) ____________ and emitter terminals, and the output a-c signal is taken from the (b) ____________ and emitter terminals.

ANSWERS

1. (a) P; (b) N; (c) N
2. (a) Emitter and collector; (b) base
3. (a) Base; (b) collector

18 BIASING THE TRANSISTOR . . . When the transistor is used as an amplifying device, two d-c potentials, called bias voltages, are required for proper operation. Figure 31 shows these two voltage supplies connected to the two types of transistor. Notice that the circuits are identical to the circuit shown in Fig. 28, except that a transistor is shown as the amplifying device. V_{CC} is the collector voltage bias which causes a d-c collector current I_C to flow. The base voltage supply is V_{BB}. This supply is connected from base to emitter, and it causes a d-c base current I_B to flow in the input circuit. Because the PNP and NPN transistors are of exactly opposite construction, the polarities of V_{BB} and V_{CC} for the PNP amplifier are exactly opposite for the NPN amplifier. In Fig. 31(a), battery V_{BB} supplies a negative voltage to the base of the PNP transistor, while in Fig. 31(b) it supplies a positive voltage to the base of the NPN.

It is very easy to remember the proper polarity for V_{BB}. If the transistor is a PNP type, the base region is an N-type semiconductor, so

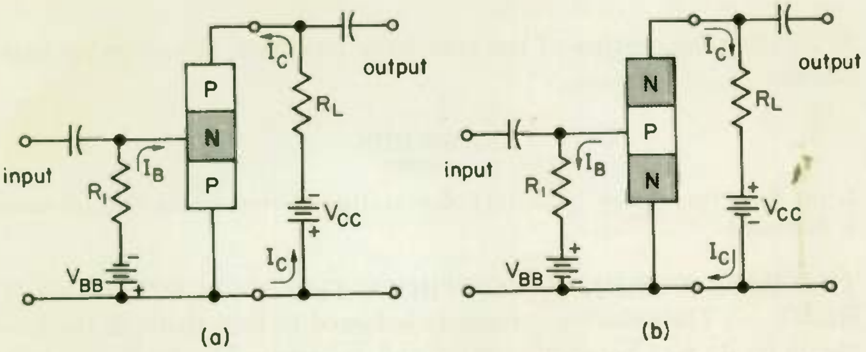

(a) (b)

Fig. 31 Biasing the transistor.

you must connect *N*egative voltage to it. The base region of a NPN transistor is P type, so V_{BB} must supply a *P*ositive voltage to the base. Once you have determined the proper polarity of V_{BB}, just remember that the same polarity must be connected to the collector, and you then know the polarity of V_{CC}. For example, if you connect a positive voltage to the base, you must connect a positive voltage to the collector. The directions of I_B and I_C are reversed for the PNP and NPN transistors, since V_{BB} and V_{CC} are reversed.

Transistors are temperature-sensitive devices. As the temperature around the transistor increases, the bias current I_C increases. For this reason it is important that the transistor is not made too hot during operation, or the collector current may increase to such an extent that the amplifier will not operate properly or damage will occur.

WHAT HAVE YOU LEARNED?

1. V_{BB}, the base supply voltage in Fig. 31, causes a base current I_B to flow in the input circuit. This voltage is connected from emitter to (a) ________ through the resistor R_1. If you are given an NPN transistor, you must apply a (b) *(+) (−)* voltage to the base. (Remember the middle letter of NPN is P.)

2. V_{CC}, the collector voltage supply in Fig. 31, causes the (a) __________ current I_C to flow in the output circuit. This voltage is connected from emitter to (b) ______________ through the resistor R_L. If you are given an NPN transistor, you must apply a (c) *(+) (−)* voltage to the collector because that polarity is (d) *(same as) (different than)* the polarity you are applying to the base.

3. As the temperature of the transistor increases, the collector bias current ______________ .

ANSWERS

1. (a) Base; (b) positive 2. (a) Collector; (b) collector; (c) positive; (d) same
3. Increases

19 THE BASE CURRENT CONTROLS THE COLLECTOR CURRENT . . . The collector current I_C is forced to flow through the base region on its way between emitter and collector. The transistor is so constructed that the base current I_B can control the resistance around

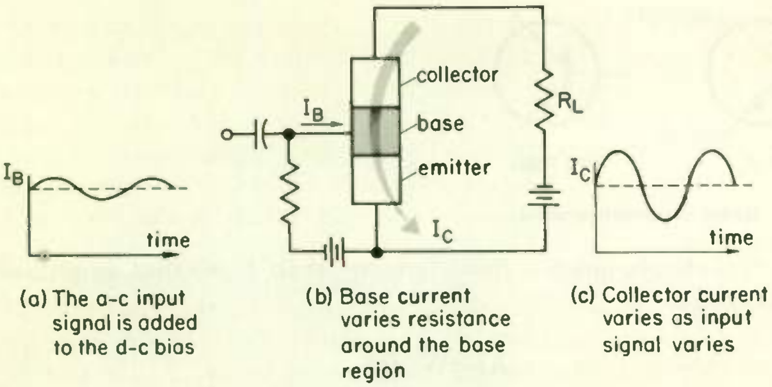

(a) The a-c input signal is added to the d-c bias

(b) Base current varies resistance around the base region

(c) Collector current varies as input signal varies

Fig. 32 **Control of collector current by base current.**

the base region and thus control *Ic*. Regardless of the type of transistor (NPN or PNP), an increase in base current reduces the resistance of the transistor, resulting in a larger value of collector current. A reduction in base current increases the transistor resistance, and a smaller value of collector current will flow.

Figure 32 shows what happens when an a-c input signal is added to the d-c bias current I_B, causing it to vary. Varying the base current at the same rate at which the input a-c signal varies will result in the transistor resistance changing in the same manner. The result of this action is a collector current varying as the a-c input signal varies. Hence, the "little man" in Fig. 16 is replaced by the base current in the transistor amplifier.

The broken line in Fig. 32(a) and (c) represents the value of the current in the absence of the input signal (zero-signal condition).

In most transistors, the base current is very small, less than 10 per cent of the collector current value. For example, a typical low-power transistor has a base current of 100 μa and a collector current of 5 ma.

WHAT HAVE YOU LEARNED?

1. The transistor is an amplifying device because the resistance from emitter to collector can be made to vary by varying the (a) ________ current. If you increase the value of I_B in Fig. 31(a), you decrease the resistance of the transistor so that I_C (b) *(increases) (decreases)*. The

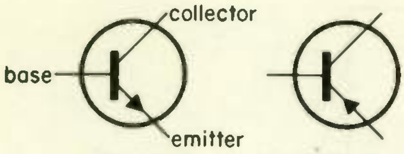

(a) NPN (b) PNP

Fig. 33 Transistor circuit symbol.

current I_B is always much (c) *(less) (greater)* than I_C, so that amplification takes place.

ANSWERS

1. (a) Base; (b) increases; (c) less

20 THE TRANSISTOR CIRCUIT SYMBOL . . . Up to this point, we have drawn the transistor as a rectangle divided into three parts. But there is a circuit symbol for the transistor, as shown in Fig. 33. There is a very simple way in which you can distinguish the NPN and PNP transistors in a circuit diagram. First of all, only the emitter lead is designated with an arrowhead. Secondly, the arrowhead points *out* for the NPN and *in* for the PNP.

When the semiconductor diode symbol was examined in an earlier section, you were told that the arrowhead points in the direction *opposite* to electron flow. This is also true for the transistor symbol.

WHAT HAVE YOU LEARNED?

1. The (a) ________________ terminal has the arrowhead. The arrowhead points (b) ________ the transistor for the PNP type and (c) ________ the transistor for the NPN type.

2. The arrowhead points in a direction which is the (a) ____________ as hole current and the (b) ____________ as electron current direction.

3. How can you distinguish the base lead from the collector lead in the transistor circuit symbol? ________________________________

ANSWERS

1. (a) Emitter; (b) into; (c) out of 2. (a) Same; (b) opposite
3. The base lead butts into the vertical line at a right angle while the collector lead resembles the emitter lead, but has no arrowhead.

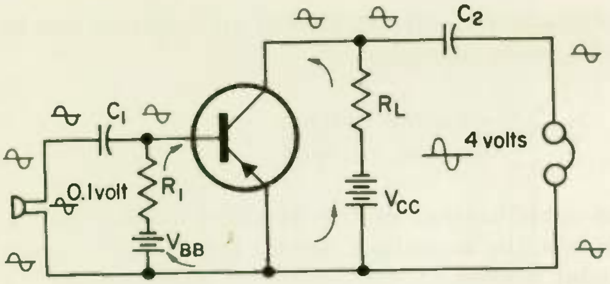

Fig. 34 A complete transistor amplifier.

21 THE COMPLETE TRANSISTOR AMPLIFIER . . . Figure 34 shows a complete transistor amplifier with a microphone input and a headphone load. You should immediately be familiar with this circuit, since it is the amplifier circuit you have just been studying, the amplifying device being a transistor. The a-c from the microphone passes through C_1 and is added to the d-c bias of V_{BB}, thereby varying I_B. This action in turn varies I_C, so that amplified a-c appears on the d-c bias of V_{CC}. This amplified a-c signal then passes through C_2 to the load, which is a pair of headphones.

WHAT HAVE YOU LEARNED?

Refer to Fig. 34. The microphone produces a sinusoidal output of 0.1 volt. The a-c output voltage across the headphones is 4.0 volts. The input voltage causes I_B to vary from 50 μa to 150 μa and I_C to vary from 1 ma to 3 ma.

1. Draw the waveforms for the (a) base current and (b) collector current on Fig. 35, showing both the d-c and a-c signal components. The peak to peak a-c input current is (c) ________ milliamperes; the peak to peak a-c output current is (d) ________ milliamperes.

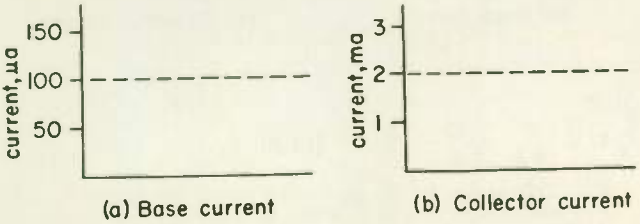

(a) Base current

(b) Collector current

Fig. 35

2. The current amplification or current gain of an amplifier can be calculated from the following relationship:

$$A_i = \frac{\text{a-c output current}}{\text{a-c input current}}$$

What is the current amplification of the amplifier in Fig. 34? (a) ________. In other words, the a-c output current is (b) ________ times larger than the a-c input current.

3. The voltage amplification of an amplifier can be calculated from the following relationship:

$$A_v = \frac{\text{a-c output voltage}}{\text{a-c input voltage}}$$

What is the voltage amplification of the amplifier in Fig. 34? (a) ________. In other words, the a-c output voltage is (b) ________ times greater than the a-c input voltage.

4. Based on the results of questions 2 and 3, does the amplifier qualify as a power amplifier? *(yes) (no)*. Explain.

ANSWERS

1.

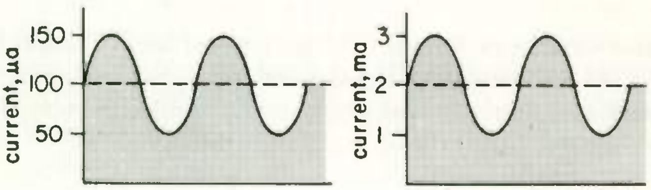

(a) Base current (b) Collector current

Fig. 36

(c) 0.1; (d) 2

2. (a) 20 . . . $A_i = \frac{2}{0.1} = \frac{20}{1} = 20$ (b) 20

3. (a) 40 . . . $A_v = \frac{4}{0.1} = 40$ (b) 40

4. Yes . . . Both the input voltage and current have been amplified.

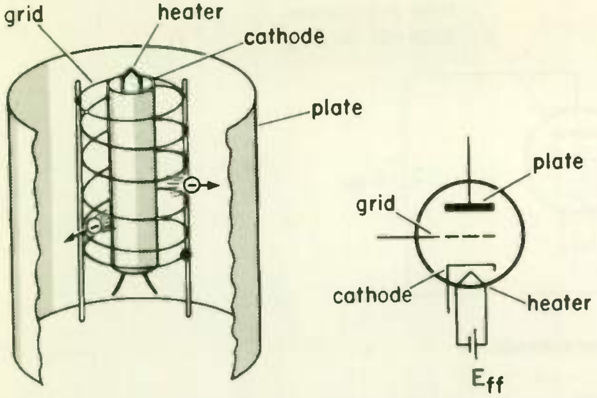

(a) Physical view; electrons must pass through the grid on their way to the plate

(b) Circuit symbol

Fig. 37 **The triode vacuum tube.**

THE VACUUM-TUBE AMPLIFIER

The vacuum-tube amplifier is a natural outgrowth of the vacuum-tube diode. By introducing a third element to the diode, the basic vacuum tube triode was devised. For many applications vacuum tubes are less desirable than transistors because they require heater power and are larger than transistors.

22 THE PHYSICAL CONSTRUCTION OF THE TRIODE . . . The triode vacuum tube has three elements: cathode, control grid, and anode (plate). As in the vacuum tube diode, a heater is required to bring the cathode temperature up to a desired level, thereby causing thermionic emission to occur. The anode is connected to a positive potential and therefore attracts electrons emitted by the cathode. Up to this point, the triode is just like the diode. The chief difference is the introduction of a control grid, which regulates the rate at which electrons flow to the plate. Figure 37 supplies a physical view of the triode and also its circuit symbol.

Notice that the control grid is a grid or mesh of wire through which the cathode-emitted electrons must pass to the plate.

By connecting the control grid to a negative potential (negative bias), the grid can be made to repel some of the electrons emitted by the cathode and in this way control the amount of current flowing from

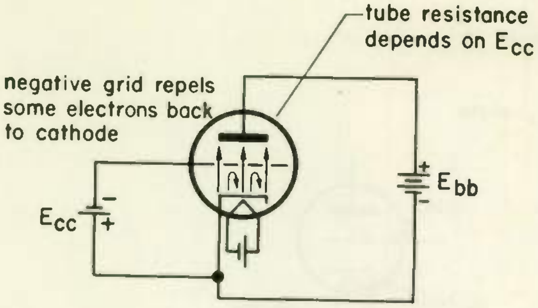

Fig. 38 **Action within a triode.**

cathode to plate. This action is illustrated in Fig. 38. The higher the negative grid bias E_{cc} is made, the harder it is for electrons to flow from cathode to plate and the more resistance the tube presents from cathode to plate. By varying the negative grid potential, you vary the effective resistance of the tube, so that the vacuum-tube triode is a variable-resistance amplifying device of the kind we have been discussing throughout this lesson.

WHAT HAVE YOU LEARNED?

1. A triode is constructed of three elements: a cathode, a plate, and a (a) ____________, through which electrons emitted by the cathode flow on their way to the (b) ____________.

2. To attract the electrons emitted by the cathode, a (a) ____________ voltage is always placed between the plate and cathode of the tube. To repel some of the cathode-emitted electrons and control the current flowing to the plate, a (b) ____________ voltage is applied between grid and cathode. If a large negative voltage were placed on the grid of the tube, you would measure a (c) *(large) (small)* resistance from plate to cathode. If you made the grid voltage less negative, the resistance from plate to cathode would go (d) *(up) (down)*.

ANSWERS

1. (a) Grid; (b) plate   2. (a) Positive; (b) negative; (c) large; (d) down

23 BIAS FOR THE VACUUM TUBE . . . The control grid serves as the input terminal of the triode vacuum tube, while the plate is the output terminal and the cathode is the common terminal. Like the tran-

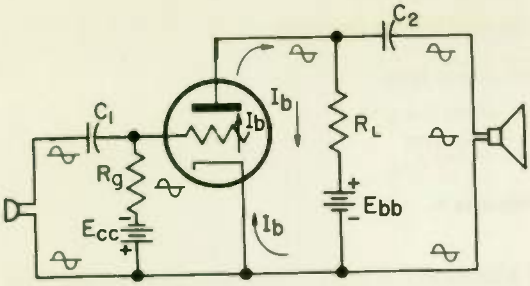

Fig. 39 **Bias for the vacuum tube.**

sistor, the tube requires a bias voltage E_{cc} in Fig. 39, for the input terminal and another bias voltage E_{bb} for the output terminal. The output bias voltage E_{bb} is usually called the plate supply voltage. In addition, the tube also requires a heater voltage supply.

The control grid bias supply E_{cc} places the control grid at a negative potential and establishes the tube's resistance at zero-signal condition. The a-c input signal varies the grid voltage, making it more and less negative, as seen in Fig. 40.

When the a-c input signal swings positive, the grid voltage is made less negative. This makes it easier for electrons to move through the tube (because its resistance is reduced), resulting in an increase in plate current I_b. A negative swing in the a-c input signal makes the grid more negative; therefore, the tube resistance is increased and the plate current is decreased. Figure 41 shows the changes in plate current that coincide with the grid voltage changes of Fig. 40.

The control grid is always kept at a negative voltage so that the electrons will not be attracted to it. Allowing the grid to go positive will result in many of the cathode-emitted electrons being captured by the grid, an undesirable action. Since the grid does not emit electrons, no bias current can flow, because there is an open circuit between the grid and cathode.

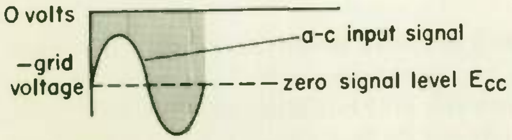

Fig. 40 **How the a-c input signal varies the grid voltage.**

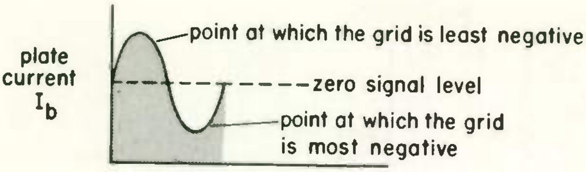

Fig. 41 **How the input signal changes I_b.**

Notice that the purpose of the control grid bias voltage is to set the vacuum-tube resistance at a certain value. The a-c input signal varies the tube's resistance, which results in a changing plate current. The a-c portion of the plate current is then delivered to the load (such as a speaker).

WHAT HAVE YOU LEARNED?

Refer to Fig. 39. Assume the microphone delivers a sinusoidal signal of 0.5 volt (max) and that E_{cc} is -2 volts.

1. When the a-c input signal is zero, the control grid potential is (a) ________ volts. When the a-c input signal is maximum positive, the control grid potential is (b) ________ volts, which (c) ____________ the tube resistance, and the plate current (d) *(increases) (decreases)*. When the a-c input signal is maximum negative, the control grid potential is (e) ________ volts, which (f) ______________ the tube resistance, and the plate current (g) *(increases) (decreases)*.

2. The d-c component of the plate current is blocked from the speaker by (a) ________. The a-c component of I_b is steered to the speaker because of the (b) ________ opposition of C_2 and high opposition of (c) ________. The purpose of E_{bb} is to make the plate (d) ______________, thereby attracting the cathode-emitted (e) ______________ to it. The load of this amplifier is the (f) ____________.

3. Because the grid is kept at a negative potential which repels electrons, current (a) *(does) (does not)* flow from cathode to grid. The a-c input current does not flow into the grid but flows through (b) ________ and ________. Will the bias battery E_{cc} last a long time or will it run down? (c) ____.

1. (a) −2; (b) −1.5; (c) reduces; (d) increases; (e) −2.5; (f) increases (g) decreases
2. (a) C_2; (b) low; (c) R_L; (d) positive; (e) electrons; (f) speaker
3. (a) Does not; (b) R_g and E_{cc}; (c) E_{cc} will last a very long time since no d-c current can flow out of it into either the grid or C_1.

24 COMPARING TUBES AND TRANSISTORS AS AMPLIFYING DEVICES

... You have seen that both tubes and transistors are variable-resistance amplifying devices. There is one important difference in their operation which you should be sure to understand. In a transistor the a-c input signal current actually flows into the base of the transistor, while in a vacuum tube no current can flow into the grid. This difference is shown in Fig. 42. The input signal to the transistor sees not only the resistance R_1 but also the resistance offered by the transistor from base to emitter.

The base-emitter resistance of most transistors is very low, a few hundred ohms. No matter how large you make R_1, this base-emitter resistance will appear in parallel with it and the total a-c input resistance to the transistor will be low. For this reason transistors draw a fairly large input current and make good current amplifiers. This is not the case with the vacuum-tube amplifier. Since the grid cannot draw current, there is an open circuit from grid to cathode and the input to the vacuum tube sees only the resistance R_1, which is usually chosen very large, on the order of 1 megohm. Vacuum tubes, then, have a very high input resistance, draw very little input current, and make good voltage amplifiers.

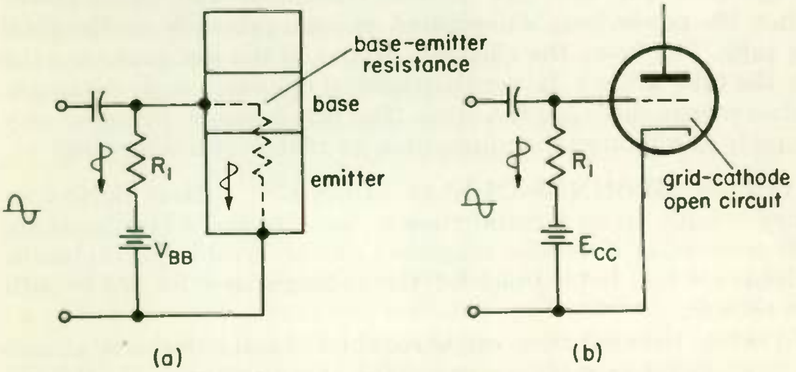

Fig. 42 Transistors have a low input resistance compared to vacuum tubes.

WHAT HAVE YOU LEARNED?

1. In Fig. 42(a), if R_1 is chosen to be 1 megohm and the base-emitter resistance is 500 ohms, the input signal will see these two resistances in parallel. In other words, the input signal will see a total resistance of ________ ohms.

2. In Fig. 42(b) there is effectively an open circuit from grid to cathode. If R_1 is chosen to be 1 megohm, the input signal will see a total resistance of ___________ ohms.

3. If a 0.1-volt signal is now applied to the transistor in Problem 1, how much input current will flow? __________

4. If the same 0.1-volt signal is applied to the tube of Problem 2, how much current will flow? (a) ________ Which draws more current, the tube or the transistor? (b) ____________

ANSWERS

1. 500 2. 1,000,000 3. 0.2 ma

4. (a) 0.1 μa (b) Transistor . . . The transistor draws 2000 times as much current as the tube.

25 **EFFICIENCY IN AMPLIFIERS . . .** The efficiency of an amplifier is often as important as its amplification. You have previously learned that the efficiency of any device is the ratio of useful power output to total power input. The useful power output from a radio is the power delivered to the speaker. If that is 10 watts and the power drawn from the 115 volt wall outlet is 100 watts, the efficiency is 10/100 = 0.1 = 10 percent.

In the power stages of transmitters, efficiency is quite important. One reason is that the difference between the input and ouput power (which is the power lost) is dissipated as heat, primarily on the plate of the tube. The lower the efficiency the more the lost heat, and the hotter the tube will get. Lower than normal efficiency in power amplifiers thus means short life for tubes. The other reason high efficiency is desirable in high-power equipment is to reduce operating cost.

26 **THE USE OF GROUNDS IN ELECTRONICS . . .** Most electronics circuitry is built up on a metal chassis. Some of the wiring leads are usually soldered or otherwise connected directly to this metal chassis. Such leads are said to be *grounded*. Grounding is used for one or both of two reasons:

(1) To reduce the amount of wiring required by using the metal chassis as a conductor to replace some of the wire conductors that would otherwise be required.

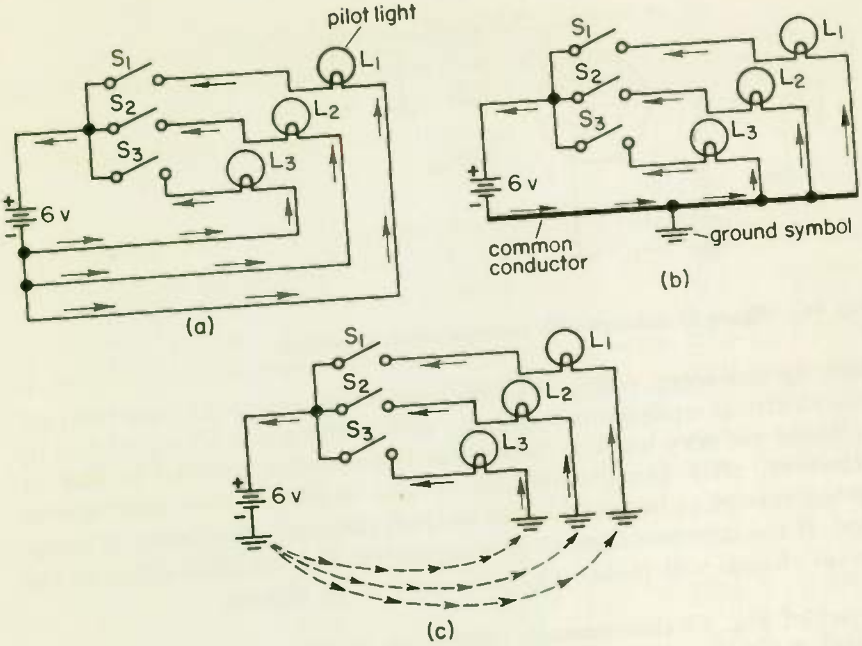

Fig. 43 The use of grounding to reduce the amount of wiring.

(2) The ground may reduce noise or hum and prevent interaction with other nearby circuits, thus improving performance.

The simple circuitry of Fig. 43 illustrates the use of grounds to reduce the amount of wiring required. The three pilot lights L_1, L_2, and L_3 are turned on and off by the three associated switches S_1, S_2, and S_3. In (a) each of the three lamps has its own independent wiring. In (b) we reduce the amount of wiring required by using just a single wire to carry all three currents from the negative side of the battery to the lamps. A conductor used like this to act as a path for a number of different currents is called a *common conductor*. It is sometimes drawn heavier than the other wirings, as we have done, so that it is easily identifiable, and also because a heavier wire is sometimes used as the common.

In (b) we show the common conductor as grounded. In this particular circuit the ground serves no purpose whatsoever. None of the currents associated with the operation of this circuit flow through the ground connection. However, if this were an amplifier circuit, the ground probably would be useful. Circuits are seldom in a world all by themselves. They are likely to be close to other circuits from which they

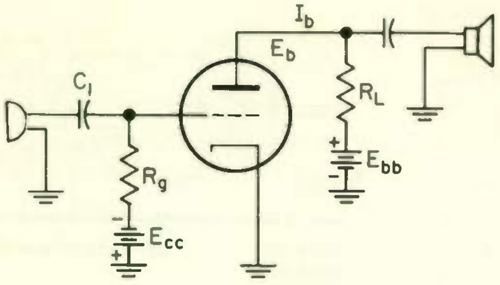

Fig. 44 **Figure 39 redrawn with common points grounded.**

pick up unwanted voltages, or they may pick up static from the various electrical equipment operating within the room. These picked up voltages are very weak to be sure at the moment they are picked up. However, after being amplified by the amplifier they can become strong enough to be heard in the output, reducing the quality of reception. If the common conductor is grounded, the shielding action of the metal chassis will reduce the pickup of stray signals.

In (c) of Fig. 43 the common conductor is done away with, and the metal chassis used instead to carry the current from the negative side of the battery to the lamps. The dashed arrows show the current path through the chassis. This method requires minimum wiring and is therefore widely used. In some cases, such as in a high-fidelity audio amplifier, the use of the chassis to carry signal currents may cause instability. In those cases a common conductor, grounded at a single point as in (b), is used instead.

In this lesson so far we have avoided the use of grounds in order to make the circuitry as clear as possible. In practice, amplifier circuits such as shown in this lesson would usually have at least one ground in order to improve performance as discussed above. A circuit involving several tubes would likely use a number of grounds in order to simplify the wiring. Figure 44 is Fig. 39 on page 37 redrawn to show the same circuit making the maximum use of grounds. The conductive chassis ties all the grounded points together in the same way that the common conductor (the bottom horizontal line) in Fig. 39 does. The circuits of Fig. 39 and Fig. 44 should be considered as identical.

27 DEFINITIONS FOR A FEW COMMONLY USED TERMS . . .

Power Supply . . . A device used for converting the electrical power available into a form directly suitable for operating electronic devices. For example a power supply might convert the 115 volts 60 cps a-c found in most wall outlets into 600 volts d-c for furnishing plate power to vacuum tubes. At the same time it might furnish 6.3 volts a-c for heating vacuum tube filaments.

Supply Voltage (or voltage source) . . . This usually refers to the source of voltage for operating the specific part of the circuit being discussed. For example the plate supply voltage in Fig. 44 is the battery E_{bb}, and the grid supply voltage is E_{cc}.

With vacuum tubes the approved practice today is to use the subscipt $_b$ for letter symbols associated with the plate, and the subscript $_c$ for symbols associated with the grid. For example, the current drawn by the plate would be called I_b, as shown in Fig. 44. We double a subscript to indicate the supply voltage. Thus E_{bb} in Fig. 44 is the supply voltage, while E_b is the actual d-c voltage on the plate. The value E_b will be less than E_{bb} because of the voltage drop across the resistor R_L. Some variation in the use of symbols will be found. Plate current and plate voltage is sometimes called I_p and E_p, and the plate supply voltage terminals are often marked $B+$ and $B-$.

Signal . . . The term signal as used in electronics refers to the a-c wave that represents the information that the equipment is expected to respond to. In an ordinary radio receiver, the signal would be the various voltage waves that appear in the receiver as a result of radio waves striking the antenna. The usual purpose of an amplifier is to increase the strength of the signal. If the amplifier is a tube, the signal is the a-c wave coming in to the grid and which is amplified by the tube.

Stage . . . A unit of an amplifier consisting of one tube or transistor and the associated circuitry used with the tube or transistor to make it operate properly. An amplifier consists of one or more stages connected in tandem.

Load . . . Generally speaking, the load is the impedance to which the power output from a device is delivered. The load in Fig. 15(b) is the speaker, since it is to the speaker that the output from the amplifier is fed. The load on a battery used to power a radio would be the radio.

When discussing how a tube or transistor operates, the term load usually refers to all the impedance in the plate or collector circuit. Thus in Fig. 39 the load would consist of R_L and the loudspeaker impedance. The resistor R_L is the plate load resistor and the loudspeaker is the useful part of the total load.

HOW TUBES AND TRANSISTORS AMPLIFY

EXAMINATION

Circle the number of the correct answer for each question that follows. When you are finished, transfer the answers to the answer sheet by putting X's in the proper squares. When the graded answer sheet is returned to you, correct in this book any questions you may have missed. By doing so, you will have a record of the correct answers to all questions for review purposes.

1. The elements of a triode vacuum tube are:

C (1) collector, base, emitter (2) anode, plate, cathode
(3) anode, cathode, base [✓ (4)] anode, control grid, cathode

2. Electron emission occurs in the cathode of a vacuum tube because:

(1) the plate pulls the electrons out of the cathode.
C [✓ (2)] the heated cathode "boils" electrons out of its surface.
(3) the control grid pulls the electrons out of the cathode.
(4) the heater warms up the anode.

3. The triode vacuum tube is an amplifier because:

C [✓ (1)] the plate voltage variations are larger than the grid voltage variations.
(2) the plate voltage variations are smaller than the grid voltage variations.
(3) the plate current variations are the same as the cathode current variations.

4. The direction of electron flow in the plate circuit of the vacuum tube amplifier is:

(1) from plate through grid to cathode.
? C (2) out of the plate into the negative terminal of E_{bb}.
[✓ (3)] out of the plate into the positive terminal of E_{bb}.
(4) out of the plate into the positive terminal of E_{ff}.

5. The purpose of C_1 in Fig. 44 is

C [✓ (1)] to keep the voltage of E_{cc} off the microphone.
(2) to shift the phase of the signal from the microphone.
(3) to build up the signal from the microphone and thus reduce noise.
(4) to make it possible to ground one side of the microphone.

6. The diagrams below illustrate a vacuum-tube circuit with a resistance load. Only one of these diagrams has the correct direction for electron flow. Select it.

C

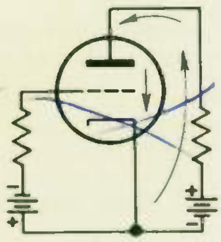

(1)

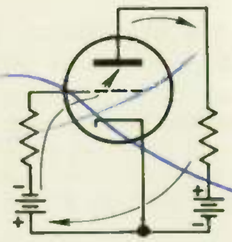

(2)

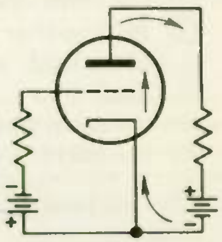

[✓ (3)]

7. The physical structure of the PNP transistor is:
   [✓ (1)] P-type emitter and collector, N-type base.
   (2) P-type emitter, N-type base and collector.
   (3) P-type collector, N-type base and emitter.
   (4) P-type base, N-type emitter and collector.

C

8. The physical structure of the NPN transistor is:
   (1) N-type base, P-type emitter and collector.
   (2) N-type emitter, P-type base and collector.
   [✓ (3)] N-type emitter and collector, P-type base.
   (4) N-type base and collector, P-type emitter.

C

9. In both types of transistor, the relationship between base current and collector current is:
   (1) the base current is controlled by the collector current.
   [✓ (2)] the base current controls the collector current.
   (3) the base and collector currents are independent of each other.
   (4) the base current and collector current are both controlled by the emitter current.

C

10. In both types of transistor, amplification results because the transistor's resistance is varied by:
   (1) the collector current
   (2) the emitter current
   [✓ (3)] the base current

C

11. The purpose of the V_{BB} supply of a transistor amplifier is:
   [✓ (1)] to establish the desired zero signal base and collector currents.
   (2) to establish the minimum value of base and collector currents.
   (3) to establish the maximum value of base and collector currents.

C

12. The load on the transistor of Fig. 34 would be:
    (1) the current drawn by the collector.
    (2) the base current.
    (3) the capacitor C_2.
    [✓ (4)] R_L together with the headphones. These comprise the complete load, with the headphones being the useful part of the load.
    (5) the microphone and the headphones.
    (6) the battery V_{cc}.

C

13. The purpose of the bias voltage E_{cc} on the grid of an amplifier tube is:
    ~~(1)~~ to limit thermionic emission.
    [✓ (2)] to set the zero signal resistance of the tube.
    (3) to set the plate current at its maximum value.
    (4) to set the plate current at its minimum value.

C

14. The term *grounded* in electronics may refer to a connection made to earth, such as by clamping to a water pipe. However, more often the term means:
    (1) a short circuit between two conductors.
    (2) an open circuit.
    [✓ (3)] a connection made to the metal chassis on which the electronic parts are mounted.
    (4) a connection made to the cathode of a tube or the emitter of a transistor.

C

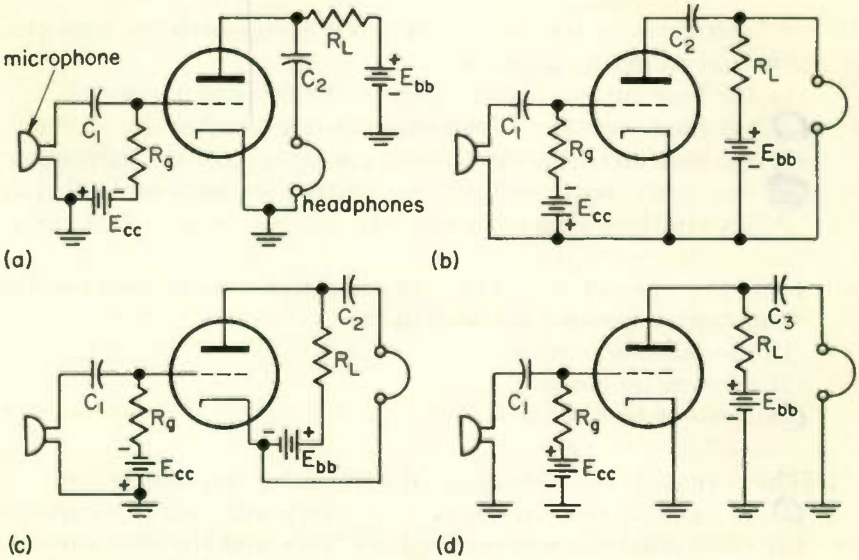

Fig. 45

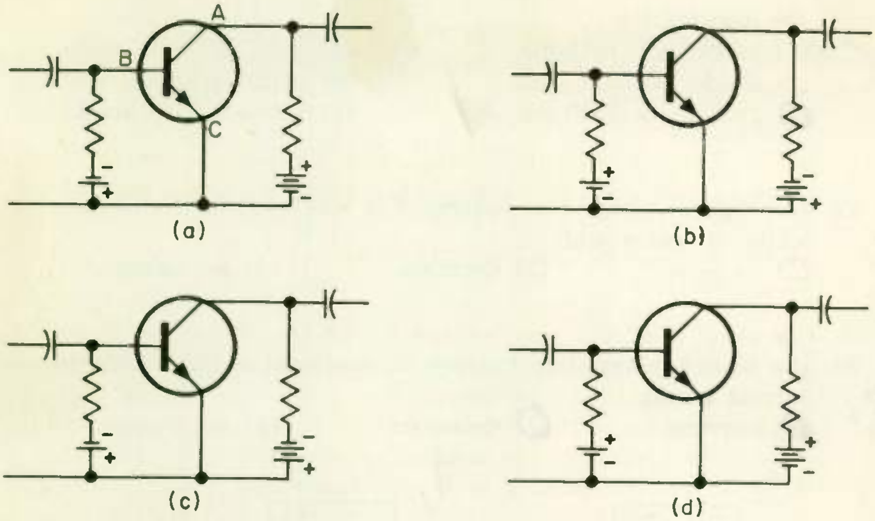

(a) (b) (c) (d)

Fig. 46

C 15. Which diagram of Fig. 45 (if any) shows a simple one-tube amplifier correctly wired?
(1) (a) (2) (b) ● (c) [✓ (4)] (d) (5) None of them

C 16. In Fig. 46(a), lead *A* of the transistor is known as the:
(1) ejector
(2) emitter
(3) remitter
(4) anode
[✓ (5)] collector
(6) base
(7) cathode
(8) getter

C 17. In Fig. 46(a) lead *B* of the transistor is known as the: (Choose answer from selections for Question 16). 6.

C 18. In Fig 46(a) lead *C* is known as the: (Choose answer from selections for Question 16). 2.

C 19. What type of transistor is used in the circuits of Fig. 46?
[✓ (1)] NPN (2) PNP

C 20. In which diagram of Fig. 46 are both bias batteries connected with correct polarity?
● (a) (2) (b) (3) (c) [✓ (4)] (d)

21. By comparing Figs. 34 and 39 we can learn that the elements of a tube corresponding to base, collector, and emitter of a transistor

are respectively:

C

(1) anode, grid, cathode.
(2) anode, cathode, grid.
[✓ (3)] grid, anode, cathode.
(4) grid, cathode, anode.
(5) cathode, anode, grid.
(6) cathode, grid, anode.

22. If a higher-voltage bias battery V_{BB} was used in Fig. 34 the collector current would:

C

[✓ (1)] increase. (2) decrease. (3) not change.

23. If a higher-voltage bias battery E_{cc} was used in Fig. 39, the anode current would:

C

[✓ (1)] increase. [✓ (2)] decrease. (3) not change.

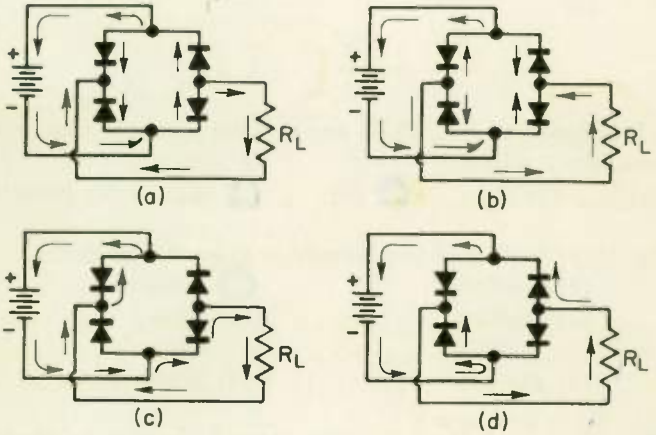

Fig. 47

24. In which diagram of Fig. 47 do the arrows correctly indicate the current path?

C

(1) (a) (2) (b) [✓ (3)] (c) (4) (d)

25. Suppose the polarity of the battery in Fig. 47 is to be reversed to that shown. Trace the current path to determine the current direction through R_L.

C

[✓ (1)] It is the same as before.
(2) The current through R_L is reversed when the battery polarity is reversed.

26. One important reason why nearly all vacuum tube and transistor circuits use capacitors is that:
    (1) capacitors give the phase shift required for proper operation.
    (2) capacitors are cheaper to use than inductors.
    (3) by using suitable size capacitors, circuit currents can be kept at desired amplitudes.
    [✓ (4)] capacitors keep d-c current from flowing in parts of the circuit where a-c is wanted but not d-c.

C

27. Conduction takes place by the movement of positive charges in:
    [✓ (1)] P-type semiconductor material.
    (2) N-type semiconductor material.
    (3) the positive plates of batteries.
    (4) some types of vacuum tubes.
    (5) uranium.

C

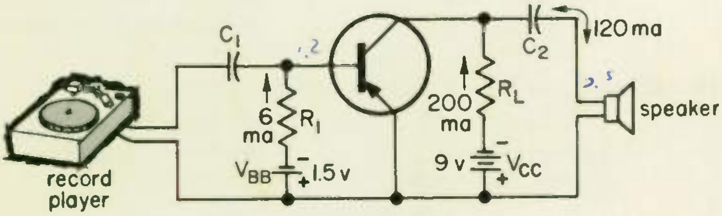

Fig. 48

28. The output signal from the record player in Fig. 48 is 3 ma at 0.2 volt. The signal voltage across the speaker is 2.5 volts. Other data is given in the figure. What is the voltage amplification between record player and speaker?
    (1) 0.08
    (2) 0.5
    (3) 1.8
    [✓ (4)] 12.5
    (5) 45
    (6) None of the above.

C

29. What is the current amplification between record player and speaker in Fig. 48?
    (1) 24
    (2) 33.3
    [✓ (3)] 40
    (4) 360
    (5) 600
    (6) 1200
    (7) None of the above.

C

30. What is the power used by the speaker in Fig. 48?
    (1) 0.03 watt
    (2) 1.8 watts
    [✓ (3)] 300 milliwatts
    (4) 30 watts
    (5) 300 watts
    (6) None of the above.

C

31. What is the power gain between record player and speaker in Fig. 48?

C

(1) 0.3
[✓ (2) 50]
(3) 200
(4) 500
(5) None of the above.

32. The efficiency of an amplifier is the ratio of:

C

[✓ (1) useful signal power output to signal power input.]
(2) useful voltage output to signal voltage input.
(3) useful signal current output to signal current input.
[✓ (4) useful signal power output to total power input.]

33. The total d-c power input (which can be assumed to be the power furnished by the two batteries) for the stage of Fig. 48 is

C

(1) 206 milliwatts
(2) 1.809 watts.
[✓ (3) 2.163 watts.]
(4) 10.5 watts
(5) 1809 watts.
(6) None of the above.

34. The efficiency of the amplifier stage of Fig. 48 is:

C

(1) 0.5 per cent.
(2) 2 per cent.
[✓ (3) 16.6 per cent.]
(4) 20 per cent.
(5) 50 per cent.
(6) 60 per cent.
(7) None of the above.

35. What is the purpose of R_L in Fig. 48?

C

[✓ (1) It controls the value of the collector current.]
[✓ (2) It is a cheap substitute for an inductor, keeping the signal out of the power supply, and forcing it to take the path through C_2.]
(3) Transistors are very sensitive, and may be damaged by sudden current or voltage changes unless protected by R_L.
(4) It reduces distortion in the output.

End of Exam

DIFFERENT MANUFACTURERS HAVE DIFFERENT WAYS OF IDENTIFYING THE LOCATION OF EMITTER, BASE, AND COLLECTOR.

Base, emitter and collector terminals may be identified by numbers, letters, keys, color codes, or by their spacing and position. One popular practice is to use a red dot to identify the collector as shown in the figure. In the round base transistor of (b) if you keep the red dot on your right the other two leads will be as shown. The transistor in (c) has the collector off by itself. The power transistor in (d) has the collector connected internally to the case. If the transistor is held with its prongs facing you so the two leads are below center, the emitter is to your left. In (e) a key is used to identify the leads. When held as shown, the leads are emitter, base, and collector as you move in a clockwise direction from the key.

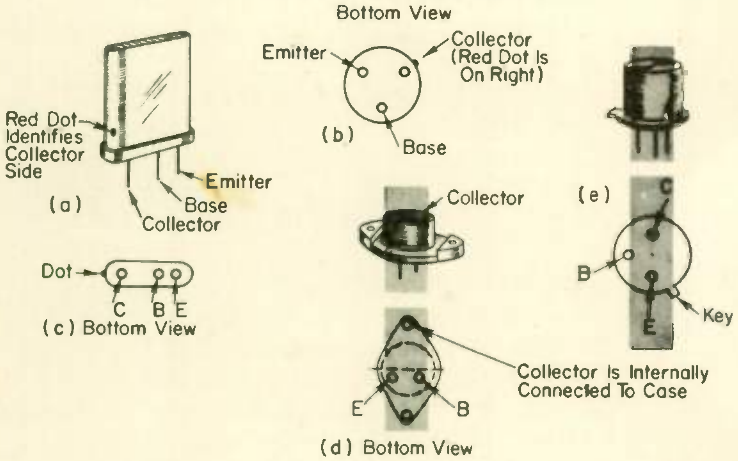

CLEVELAND INSTITUTE OF ELECTRONICS / CLEVELAND, OHIO

electronics

CLEVELAND INSTITUTE OF ELECTRONICS / CLEVELAND, OHIO

Operation of Semiconductor Devices

2402-2

An AUTO-PROGRAMMED™ Lesson

ABOUT THE AUTHOR

Fred E. Eberlin has spent the major part of his professional career in teaching, technical training, and technical writing. His classroom experience includes teaching at the industrial, college, and technical institute levels. He has also been responsible for the writing and editing of training material for the home-study student.

His practical experience includes two years as a Research Associate with the Antenna Laboratory of The Ohio State University. He has also worked at the Reliance Electric and Engineering Co. and the Lincoln Electric Co., both in Cleveland, Ohio.

Academically, Mr. Eberlin has earned both the B.S.E.E. and M.Sc. degrees in Electrical Engineering from The Ohio State University. While completing work for his Masters degree, he was employed as an Instructor in the Department of Electrical Engineering. He also taught in the Departments of Mathematics and Physics while working toward his B.S.E.E. degree.

On the technical institute level, Mr. Eberlin taught at the Columbus (Ohio) Institute of Technology. He also taught in the evening technical division of the Max Hayes Trade School, Cleveland, Ohio.

For two years, Mr. Eberlin was a Project Director on the Technical staff of the Cleveland Institute of Electronics. His major responsibility was the preparation of instructional material designed especially for the home-study student. In his two years with the Institute, Mr. Eberlin wrote texts in physics, DC circuits, Diodes, and Transistors. All these texts utilize the principles of programmed learning.

Mr. Eberlin is now associated with the Aero-Florida division of Honeywell. His responsibilities include technical writing and technical training of in-plant and customer personnel.

He is a member of the IEEE.

This is an AUTO-PROGRAMMED* Lesson exclusive with the Cleveland Institute of Electronics. It is your assurance of the finest in technical education and training.

**Trademark*

Accredited by the Accrediting Commission
of the National Home Study Council

The Accrediting Commission has been approved by the U.S. Office of Education as a "nationally recognized accrediting agency".

CLEVELAND INSTITUTE OF ELECTRONICS

Operation of Semiconductor Devices

By FRED E. EBERLIN, M.Sc., Member, IEEE
Aero-Florida Division, Honeywell, Inc.

2402-2

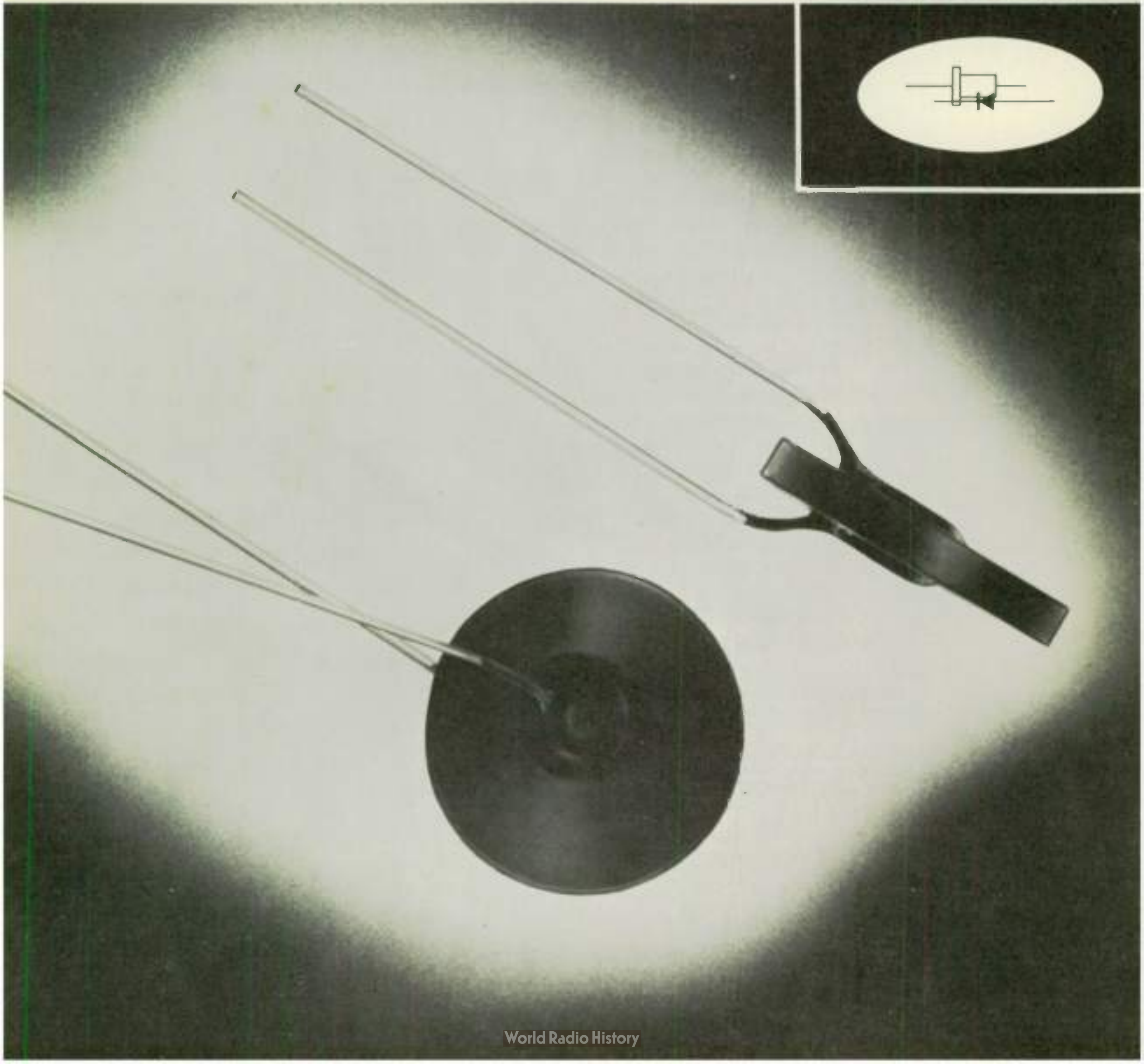

In this lesson you will learn ...

Important Special Semiconductor Devices ...

Frontispiece: *Examples of typical varistors (about twice size).*
Frontispiece: Photo: Courtesy, General Electric Co.

THIRD EDITION First Printing February, 1967.

2402-2

A chat with your instructor

Besides the ordinary semiconductor diode which you have already studied, there are now many important special types of diodes and other semiconductor devices. Of these, you will study in this lesson zener diodes, tunnel diodes, varistors, stabistors, thermistors, and varactor diodes. Special types of diodes are normally used for purposes other than rectification. For example, the tunnel diode is used as an amplifier and the varactor as a variable capacitor.

The first part of the lesson is devoted to a careful study of how the ordinary diode works. Since all semiconductor products work on many of the same basic principles, you will have little trouble understanding and intelligently using transistors and other semiconductors after you have learned the operating principles of the ordinary diode. This is the age of semiconductors. The future will undoubtedly see a vast increase in the number of semiconductor devices on the market, and an equal increase in the use of these devices. If you know general semiconductor theory well, as given in this lesson, you should not have much trouble learning to use new products as they come out in the future.

The Theory of the Semiconductor Diode

This section of your lesson is important because if you understand how the semiconductor diode works, you will be readily able to under-

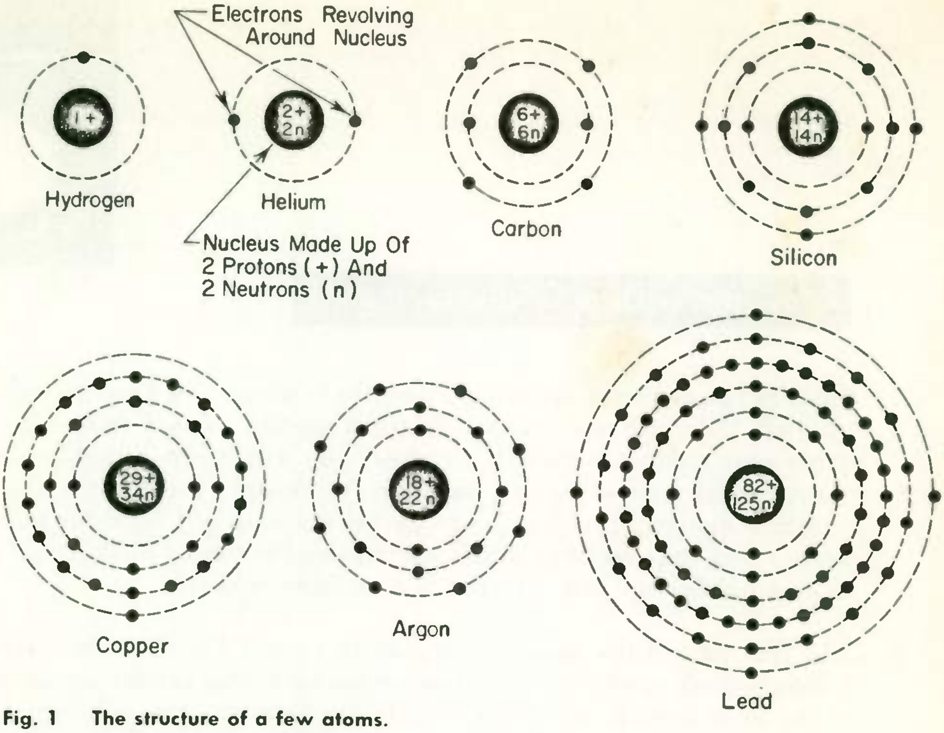

Fig. 1 **The structure of a few atoms.**

stand more complex semiconductor products, such as transistors. Since the rectifying and amplifying action takes place among the atoms of the semiconductor material, we must explore the nature of the atoms a little before you can understand how semiconductor devices work.

THE NATURE OF THE ATOM

1 THE PARTS OF THE ATOM . . . The atoms of several different elements are shown in Fig. 1. Every atom has a relatively heavy core, called the nucleus, made up of protons and neutrons. Electrons revolve around the nucleus, like the planets around the sun.

Figure 1 shows that an atom of helium has (1) ______ protons, (2) ______ neutrons, and (3) ______ electrons. An atom of carbon has (4) ______ protons, (5) ______ neutrons, and (6) ______ electrons. An atom of copper has (7) ______ protons, (8) ______ neutrons, and (9) ______ electrons. An atom of hydrogen (the simplest atom) has (10) ______ protons, (11) ______ neutrons, and (12) ______ electrons.

(1) 2; (2) 2; (3) 2; (4) 6; (5) 6; (6) 6; (7) 29; (8) 34; (9) 29;
(10) 1; (11) 0; (12) 1;

A proton carries a positive charge. A neutron carries no charge at all. An electron carries a (13) __________ charge.

Like charges repel each other; unlike charges attract each other. A positively charged ball will (14) ______________ a negatively charged ball. A negatively charged atom will (15) __________ another negatively charged atom. A positively charged atom will attract another atom if the other atom is (16) ______________ charged. One plate of a capacitor carries a positive charge and the other a negative charge. Therefore the two plates of a capacitor (17) ____________ each other.

The negative charge on an electron is equal in strength to the positive charge on a proton. This means that the force of repulsion between two electrons is equal to the force of attraction between an electron and a proton. Also, the force of attraction between a proton and an electron is equal to the force of repulsion between two protons or between two electrons. The strength of a charge formed by 10 electrons is 10 times the charge of one electron. The strength of a charge formed by 1,000,000 protons is (18) ______________ times the charge of one proton.

Suppose a charge of 1,000,000 electrons attracts a certain positively charged ball with a force of one pound. Then a charge of 1,000,000 protons will repel this ball with a force of (19) _____ pound (if the same distance away). If a charge consists of 1,000,000 protons and 1,000,000 electrons, the protons will tend to (20) __________ the positively charged ball with a force of one pound, and the electrons will tend to (21) __________ the positively charged ball with a force of one pound. Since the pushing force equals the pulling force, the net result is that the ball is neither attracted nor repelled.

2 CHARGED BODIES . . . A body that neither attracts nor repels another body is said to be neutrally charged (or uncharged). A body is neutrally charged when the number of protons in the body is (22) __________ to the number of electrons. A body that has more protons than electrons is (23) ______________ charged, and a body that has more electrons than protons is (24) ______________ charged. The number of protons in the carbon atom of Fig. 1 is (25) _____, and the number of electrons revolving around the nucleus is (26) ______________. Therefore the carbon atom is (27) ______________ charged. If the carbon atom were to lose one or more of its electrons, it would be (28) ______________ charged.

(13) negative; (14) attract; (15) repel; (16) negatively; (17) attract;
(18) 1,000,000; (19) one; (20) repel; (21) attract; (22) equal; (23) positively;
(24) negatively; (25) 6; (26) 6; (27) neutrally; (28) positively;

All the atoms shown in Fig. 1 have the same number of electrons as protons, and are therefore without a charge (neutrally charged). It is the normal condition for all atoms to have the same number of electrons as protons. Therefore all atoms are normally (29) __________ charged.

Under certain circumstances an atom may lose one of its electrons. The atom is then (30) __________ charged, because it has one more proton than it has electrons. Sometimes an atom will pick up an electron. The atom is then (31) __________ charged.

Atoms that are positively or negatively charged through the loss or gain of electrons are called *ions.* A positive ion has (32) __________ electrons than protons, and a negative ion has (33) __________ electrons than protons.

3 SOME PROPERTIES OF AN ATOM . . .

Figure 1 shows that the revolving electrons exist in a number of orbits, called rings or shells. The electrons of the silicon atom are in three shells. The shell closest to the nucleus of a silicon atom holds (34) ______ electrons. The next one further out has (35) __________ electrons, and the outside orbit has (36) __________ electrons.

A more detailed view of the copper atom is given in Fig. 2. The shaded areas are the shells within which the electrons move. The white area between the shells is a "no-man's land" in which neither an electron nor anything else can exist.

There is a maximum number of electrons that can exist in a shell. The number of electrons in the first, or K, shell (the one nearest the nucleus) cannot exceed two. The second, or L, shell can have a maximum of eight electrons, the third (M) shell a maximum of 18, and the fourth (N) shell a maximum of 32. However, the *outer shell can never have more than eight electrons.* Thus the N shell could not have over eight electrons unless the atom has another shell outside of the N shell, like the lead atom in Fig. 1.

We have mentioned that atoms will sometimes gain or lose electrons to become ions. This gain or loss nearly always occurs in the outer shell. The electrons in the inner shells are too tightly bound to the nucleus to be removed, except by forces greater than are normally ever encountered.

(29) neutrally; (30) positively; (31) negatively; (32) less; (33) more;
(34) two; (35) eight; (36) four;

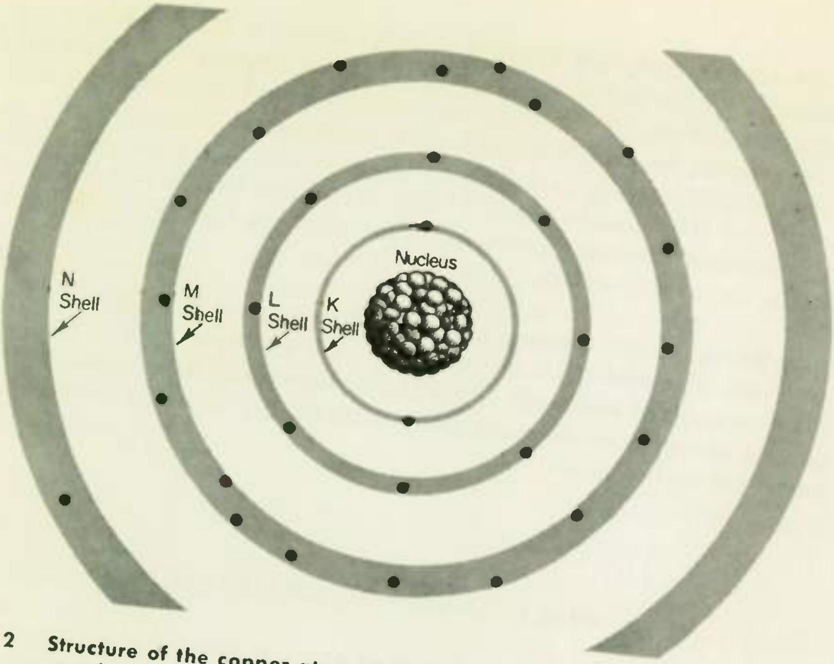

Fig. 2 **Structure of the copper atom. Orbital electrons cannot exist in the white area between the shells.**

4 VALENCE RING . . . The outer shell of the atom is of great importance in electronics, because of its ability in many atoms to release electrons or to take on additional electrons. There would be no electronic industry if it were not for this flexibility in the outer shell. Because of the importance of the outer orbit it has a special name: *the valence ring*. The electrons in the valence ring are called the *valence* electrons. Figure 1 shows that silicon has (37) ________ valence electrons, and copper has (38) ______.

Valence electrons that have become detached from their atoms may wander around through the material as "free electrons" for some time until they become attached to some other atom. Most current flow consists of the migration of these free electrons.

An electron will leave its atom and become a free electron if it picks up enough energy to break the bond that binds it to its nucleus. In this respect it is like a rocket. A rocket shot off with sufficient energy can escape the gravitational force of the earth, and travel on to distant planets. One fueled with less energy will orbit around the earth like the electrons around the nucleus of an atom.

(37) four; (38) one;

In electronics there are three common sources of energy which can break valence electrons away from their atoms. These sources are heat, light, and voltage. The heat of ordinary room temperature is sufficient to cause some free electrons to form in most metals. Light shining on some materials, particularly semiconductor materials, will cause additional free electrons to form. This is evidenced by the resistance of some semiconductors decreasing when exposed to light. All photoelectric devices operate on this principle.

Applying a voltage across a material will increase the number of free electrons. The positive terminal of the voltage attracts the oppositely charged valence electrons while the negative terminal repels them, causing many more to break away from their own atom than would otherwise be the case.

WHAT HAVE YOU LEARNED?

1. The electrons in the outer orbit of an atom are called (a) __________ electrons. The maximum number of valence electrons an atom can have is (b) __________.

2. When a valence electron is detached from an atom as a free electron, the atom becomes a __________ charged __________.

3. Three sources of energy that can break valence electrons away from their atoms are (a) __________, (b) __________, and (c) __________.

4. When a voltage is applied to a conductor, the number of free electrons *(does) (does not)* increase.

ANSWERS

1. (a) valence electrons; (b) eight . . . This is the maximum number of electrons that an atom can have in its outer orbit.

2. positively (charged) ion.

3. (a) heat; (b) light; (c) voltage . . . any order correct.

4. does . . . voltage is one of the three sources of energy that will break valence electrons from their orbit.

5 VALENCE ELECTRONS DETERMINE CONDUCTIVITY . . .

The fewer the electrons in the valence ring the less these electrons are bound to the nucleus. In the copper atoms of Figs. 1 and 2 there is only one electron in the outer orbit (the N shell) and it is far removed from the nucleus. Consequently, it requires only the slightest force to dislodge this electron from its atom. In fact, the heat energy picked up by the electrons in the N shells of the atoms in a piece of copper at room temperature is sufficient to dislodge practically every outer orbit electron from its shell and send them wandering about as "free electrons", not attached to any atom. It is because of this great number of free electrons that copper is an excellent conductor.

The more electrons there are in the outer shell, the (39)____________ these electrons are bound to the nucleus. Iron has two electrons in its outer orbit. Therefore, outer orbit electrons in iron (40) *(can) (cannot)* become free electrons as easily as in copper. Iron then is a (41)________ conductor than copper. Silver is the best conductor known. Therefore silver has (42)______ electron in its outer shell. Aluminum has three electrons in its outer shell and gold has one. Therefore aluminum is a (43)____________ conductor than gold. Metals have relatively few electrons in their outer orbit. Therefore metals are conductors.

The maximum number of electrons in the outer orbit of an atom is (44) ______. When the number of outer shell electrons is near this maximum number, they are held too tightly to the nucleus to break away readily to form free electrons. Therefore materials in which the atoms have close to the maximum number of electrons in the outer orbit are usually poor conductors or insulators. Because it has six electrons in its outer orbit sulfur is an (45)____________.

6 EXCHANGE OF ELECTRONS BETWEEN ATOMS . . .

When the outer shell of an atom holds the maximum number of eight electrons, it cannot take on additional electrons, and it will not readily depart with any of the eight which it has. When the outer shell has a few less than eight, it attracts other electrons, if they are available, into its outer orbit until it has a full complement of eight.

Figure 3(a) shows a sodium and a chlorine atom close together. The sodium atom has (46)______electron in its outer orbit. The chlorine atom lacks (47)______electron of having its full complement of eight electrons in its outer orbit. The lone electron in the outer shell of the sodium, being poorly held to its nucleus, is attracted to the chlorine atom to complete its complement of eight in the outer shell. After

(39) tighter; (40) cannot; (41) poorer; (42) one; (43) poorer; (44) eight; (45) insulator; (46) one; (47) one;

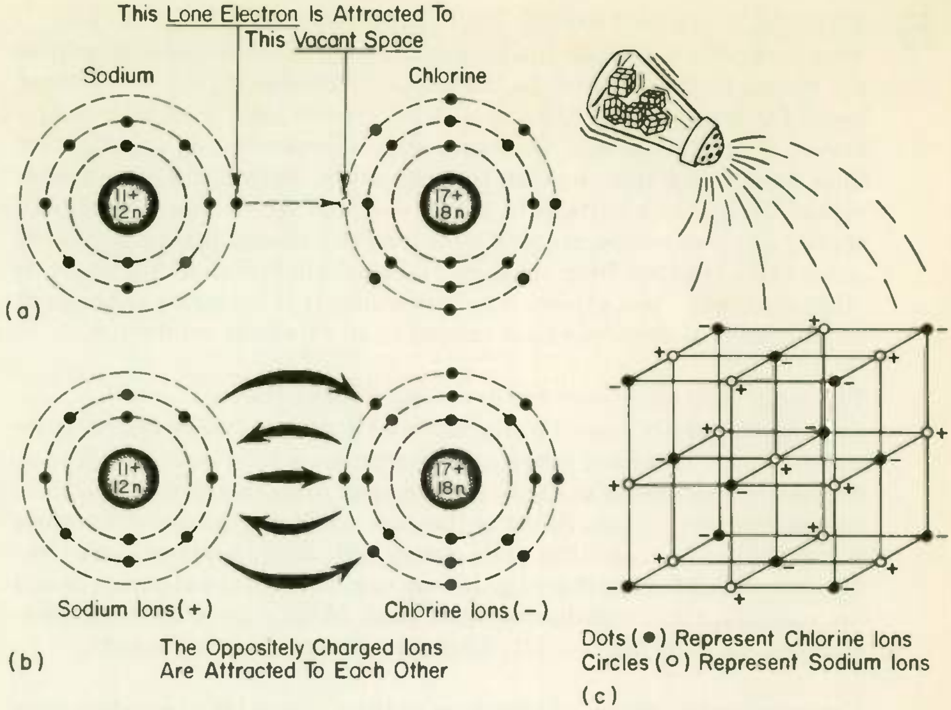

Fig. 3 **(a) When a sodium and chlorine atom are brought together, the sodium loses an electron to the chlorine.**
(b) The oppositely charged ions attract each other, forming sodium chloride (ordinary table salt).
(c) Structure of salt crystal.

this transfer has taken place, the sodium atom is (48) ________ charged, and the chlorine atom is (49) ________ charged. Atoms carrying charges are called (50) ________. The oppositely charged ions are attracted to each other as in Fig. 3(b). The two ions bound together form a particle of sodium chloride, which is ordinary table salt.

If the metal sodium in powdered form is brought into contact with the gas chlorine, the two will react vigorously. This reaction will be accompanied by much heat as the outer orbit electrons of the sodium pass over to fill the vacant spaces in the outer shell of the chlorine atoms. The result of this reaction will be cubical crystals of sodium chloride. Because of the attraction between oppositely charged ions, they rigorously arrange themselves with respect to each other as shown in Fig. 3(c). Notice how each ion is adjacent to an oppositely charged ion on every side.

(48) positively; (49) negatively; (50) ions;

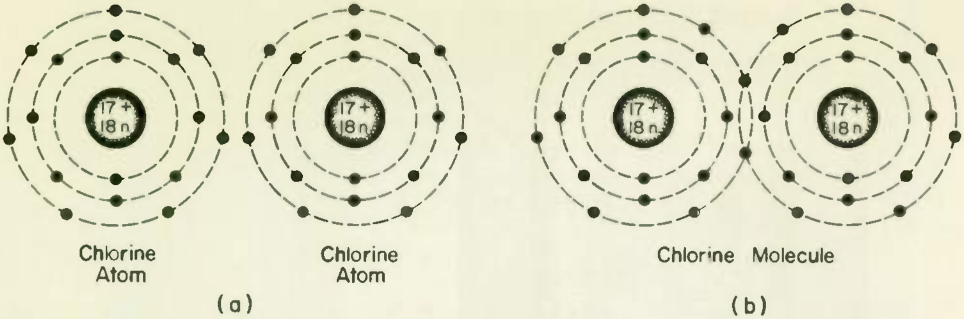

Fig. 4 **(a) Chlorine atoms have seven valence electrons.**
(b) Here electrons are shared so that the outer orbit of both atoms has eight electrons.

Because the atoms of table salt are bound together into a rigid crystalline mass by the electrostatic attraction between oppositely charged ions, sodium chloride is referred to as an *electrovalent* compound. There is another method, called *covalence,* by which atoms are bound together. In a covalent compound the outer shell electrons are shared by two atoms without any of the electrons leaving their own atom.

An example of the binding together of two atoms by covalence is shown in Fig. 4. A chlorine atom has only seven outer orbit electrons. Therefore it tries to collect an additional electron from some nearby atom to complete its complement of eight electrons. It can't pull the extra electron it needs from another chlorine atom nearby because the outer orbit electrons of chlorine are tightly bound to their own atoms. However, the chlorine atoms can combine into a molecule as in Fig. 4(b) in which, through the sharing of electrons, both atoms now have eight outer orbit electrons.

CHARGE CARRIERS

7 MOVEMENT OF POSITIVE CHARGES FORMS CURRENT . . . Most electrical current is made up of the movement of negatively charged particles in the form of free electrons. A current flow might also consist of the movement of negative ions. This is not so common because the heavy weight of an ion as compared to the electron makes the former much less mobile.

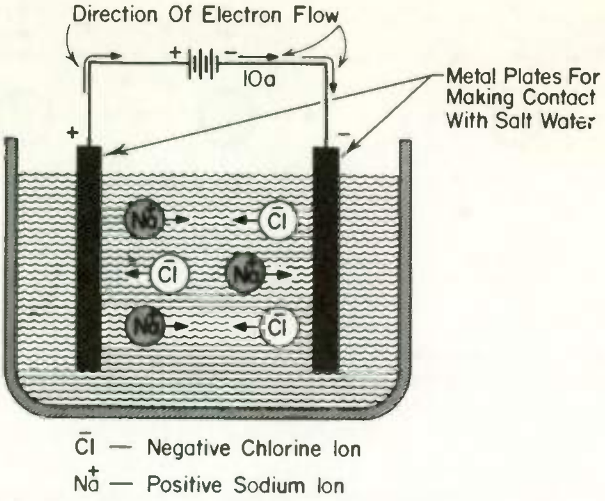

Fig. 5 **Showing current conduction through a salt solution.**

An electrical current may also consist of the movement of positive particles, such as positive ions. The concept of conduction through the movement of positive charges is important in studying semiconductors. An example of conduction by the movement of positive charges is current flow through a solution of salt water. Salt water is a good conductor, but it does not conduct by the movement of free electrons. Instead it conducts by the movement of positive sodium ions and negative chlorine ions, as shown in Fig. 5. Because opposite charges attract, the positive sodium ions move toward the (51) ____________ plate. Also, the positive sodium ions are pushed toward the negative plate by the positive plate because (52) __________ charges repel each other. The negative chlorine ions move towards the (53) ____________ plate. Ignoring small current flow due to ionization of the water itself, the moving sodium ions and the moving chlorine ions each carry one-half of the total current. The battery current in Fig. 5 is 10 amperes. Therefore the sodium ions carry (54) _____ amperes and the chlorine atoms (55) _____ amperes.

Particles that form a current by carrying charges from one point to another are called *charge carriers.* The ions of Fig. 5 are *charge carriers.* In ordinary conduction through a wire, the free electrons are (56) ____________ ____________. In Fig. 5 the positive charges are carried in the (57) ____________ direction to the negative charges. A current of (58) _____ amperes is carried in each direction. The two currents of opposite directions do not cancel each other because one current consists of positive charges and the other of negative charges.

(51) negative; (52) like; (53) positive; (54) 5; (55) 5; (56) charge carriers;
(57) opposite; (58) 5;

If two groups of negative charge carriers, each group carrying five amperes, both move in the same direction, the total current is (59)____ amperes. If one of the groups of negative charge carriers moves in the opposite direction to the other negative charge carrier group, the total current is (60)____ amperes, since the two opposite currents cancel each other.

If two groups of positive charge carriers, each group carrying five amperes, move in the same direction, the total current is (61)____ amperes. If they move in opposite directions, the total current is (62)____ amperes.

If a group of positive charge carriers carrying five amperes moves in the same direction as a group of negative charge carriers also carrying five amperes, the total current is (63)____ amperes, because the two currents cancel each other. If the two oppositely charged groups move in opposite directions the total current is (64)____ amperes.

8 CURRENT DIRECTION . . . Since in Fig. 5 current flow in the salt water consists of equal charges moving in opposite direction, what is the current direction? In this course we define current direction as the direction of movement of the free electrons. When a current consists of charge carriers other than free electrons, the current direction is the direction that free electrons would move in the circuit if they were the charge carriers. For example, if in Fig. 5 conduction through the salt water were by electron flow, the direction of movement would be from negative plate to positive plate. Hence, the current direction through the salt water in Fig. 5 is from (65)______ to (66)______.

Said another way, current direction as used in this course is the direction of movement of negative charge carriers, and is opposite to the direction of positive charge carriers. You should keep in mind that many text books and engineers define current direction as the direction of movement of positive charge carriers and opposite to the direction of negative charge carriers. This is known as the *conventional* current direction. The conventional current direction is opposite in all cases to current direction as defined in this course.

WHAT HAVE YOU LEARNED?

1. Conduction within a vacuum tube is by the movement of (a)

(59) 10; (60) zero; (61) 10; (62) zero; (63) zero; (64) 10; (65) right; (66) left;

____________ charges. The charges are conveyed from (b)____________ to ____________ by means of (c)____________ acting as charge carriers. The current direction through the tube, as current direction is defined in this course, is from (d)____________ to ____________.

2. Conduction within a mercury vapor rectifier tube is accomplished in part with positive charge carriers (positive mercury ions). The direction of movement of the positive ions is from (a)____________ to ____________. The current direction through the tube is from (b) ____________ to ____________.

ANSWERS

1. (a) negative; (b) cathode (to) plate; (c) electrons; (d) cathode (to) plate.

2. (a) plate (to) cathode; (b) cathode (to) plate.

9

SEMICONDUCTOR MATERIALS . . . With respect to conductivity it is convenient to divide materials into three classes: conductors, semiconductors, and insulators. Conductors have a (67)____________ resistance, insulators a very (68)____________ resistance, and semiconductors a resistance value somewhere in between. Silicon, a typical semiconductor, has a resistance a billion times as great as copper, but only one-billionth as great as a good insulator.

A conductor has (69)____________ free electrons. An insulator has extremely few (70)____________ ____________. A semiconductor has only a few free electrons, but more than an insulator. Materials in which the atoms have only one or two valence electrons usually have (71)____________ free electrons. Materials in which the atoms have seven or eight electrons in their outer orbit usually have extremely few (72)____________ ____________. Materials in which the atoms have four valence electrons probably have some free electrons, but not nearly so many as a good conductor has. Silicon and germanium, the two most important semiconductors, have four valence electrons.

A silicon or germanium atom will try to fill up its outer orbit by adding additional electrons until there are (73)______ electrons in its outer orbit. This is done by covalence as shown in Fig. 6. In this figure and hereafter we show only the outer shell of electrons, because the inner shells do not play an active part in semiconductor action, and therefore need not be considered. Each of the four outside atoms shares

(67) low; (68) high; (69) many; (70) free electrons; (71) many; (72) free electrons; (73) 8;

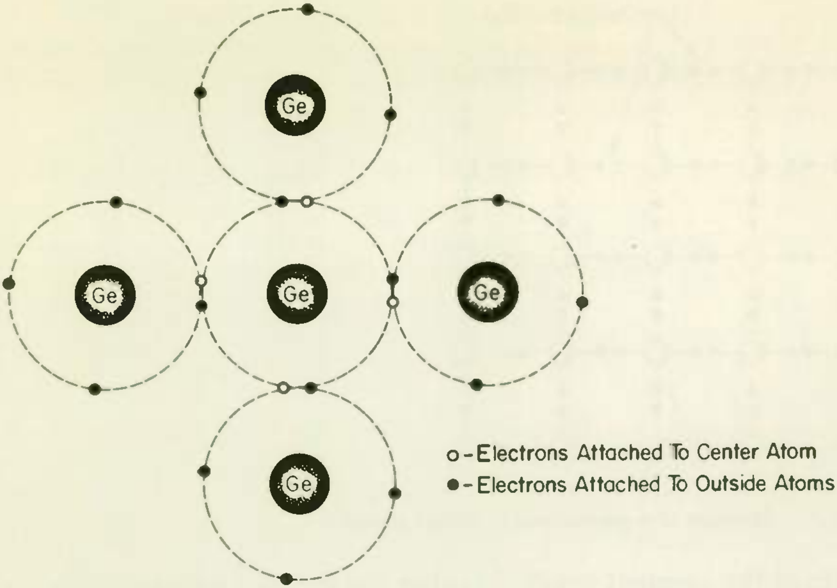

Fig. 6 **Covalence in germanium. Only the valence ring of electrons is shown for each atom.**

its electrons with the center atom, but without any of the electrons becoming detached from their own orbit. Thus the center atom has eight electrons associated with its outer shell. Nearly every atom within a piece of pure germanium or silicon is within the center of four other atoms to which it is bound with covalent bonds as in Fig. 6. This is shown in Fig. 7, where the black dots are the outer orbit electrons, and the line between each electron and a nucleus means that that electron is attached to that nucleus. Two electrons close together (paired electrons) means that they are shaped by the associated nucleuses. A set of paired electrons form a covalent bond. Because of the sharing of electrons, each atom has the use of eight electrons in its valence ring.

So that covalence can take place, each silicon or germanium atom is held in a rigid position with respect to the other atoms, forming a crystal in the shape of a cube.

10 CURRENT FLOW IN PURE SEMICONDUCTORS . . . At very low temperatures, say below −80° F, all the outer orbit electrons in germanium and silicon are held tightly to their own atoms with the

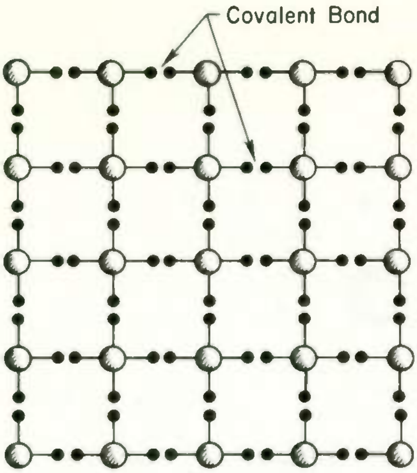

Fig. 7 **Structure of a germanium or silicon crystal.**

help of the covalent bonds. In other words there are practically no free electrons at very low temperatures, so that silicon and germanium are insulators. At higher temperatures a few electrons break away to become free electrons. The number of free electrons increases as the temperature increases, and consequently the resistance of the semiconductor material is (74) ______________ when the temperature is increased. Because the resistance varies with temperature, semiconductors are said to be *temperature sensitive.* The amount of current that will flow through a semiconductor when a given voltage is applied (75) ____________________ when the temperature increases. The reverse current through a semiconductor diode for a given back voltage (76) ____________________ when the temperature increases. As the temperature increases the forward voltage drop across a diode carrying 100 ma will (77) ____________________. This is because the forward resistance of the diode has (78) ____________________.

11 CURRENT MOVEMENT IN SEMICONDUCTORS

HOLES ARE POSITIVE CHARGE CARRIERS . . . In Fig. 8 ignore for the moment the voltage shown across the crystal. Electron A has broken away from its atom and become a free electron wandering through the crystal structure. The vacant spot in the covalent

(74) reduced; (75) increases; (76) increases; (77) decrease; (78) decreased;

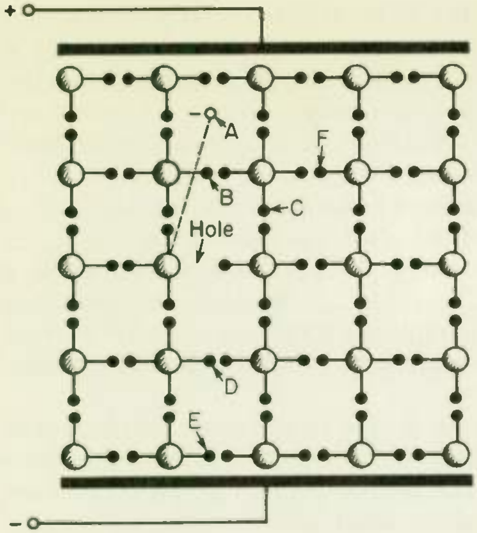

Fig. 8 **Semiconductor crystal with an electron broken loose from its bond.**

structure formed by the departure of this electron is called a *hole*. The atom with the hole is *positively* charged because it has lost an electron. For convenience, we think of this charge on the atom as being concentrated at the hole. Therefore we say that *a hole has a positive charge.*

A hole exerts a strong attraction on the valence electrons of adjacent electrons in an effort to fill up the valence ring of its atom. This attraction is strong enough to break adjacent covalent bonds. For example in Fig. 8, electron C might be broken from its bond and pulled over to fill the present vacancy. Then the hole has moved from its original position to point C. When the hole is at C it may break away electron F, thus moving the hole to position (79) ______.

Holes thus wander around through the material the same as free electrons do. Because both free electrons and holes are mobile and carry charges, they are both charge carriers. As far as semiconductor electronics is concerned, the only significant difference between an electron and a hole is that an electron is a (80) ______________ charge carrier and a hole is a (81) ______________ charge carrier. It is helpful if you think of a hole as being exactly like a free electron except that it carries a positive charge.

(79) F; (80) negative; (81) positive;

12

CURRENT FLOW THROUGH SEMICONDUCTORS . . . We have mentioned that free electrons and holes wander around randomly in a semiconductor material. When a voltage is applied across the material, as in Fig. 8, where the material is clamped between two charged metal plates, the electrons and holes start drifting in a general direction. The negatively charged electrons drift towards the (82)____________plate and the positively charged holes move towards the (83)____________plate. The holes and the electrons move in (84)____________directions. Because they carry charges, their movement in a specific direction forms a (85)____________. Because they are oppositely charged carriers moving in opposite direction, the total current is the (86)____________of the hole current and the free electron current.

Refer to Fig. 8. The way the hole moves to the negative plate is as follows. Electron (87)______ breaks from its bond and moves into where the present hole now is. Then the hole is at point D. Next, electron (88)______moves up leaving the hole at point (89)______. Next an electron from the negative plate moves over to fill up the hole at point E. The hole then no longer exists. At the same time as this is going on, the free electron A drifts on until it reaches the positive plate, which absorbs it out of the semiconductor. Both the free electron and the hole have now disappeared. The material would now be an insulator except for the fact that other free electrons and holes are continually formed in the material by energy the bound electrons pick up from the heat in the material.

13

IMPROVING THE CONDUCTIVITY OF SEMICONDUCTORS . . . The conductivity of pure germanium or silicon is very poor because only a relatively few holes and free electrons form at ordinary room temperature. Also, unfortunately, a drifting electron frequently comes close to a hole, and when this happens it is pulled into the hole. This makes two charge carriers less, the free electron and the hole both disappearing.

The conductivity of the semiconductor materials must be improved for use in diodes and transistors. This is done by adding a very small amount of an impurity of the right type to the semiconductor material. This greatly increases the conductivity by increasing the number of charge carriers. The process of adding impurities to a semiconductor is more popularly referred to as *doping*. For a given applied voltage, doped silicon will pass (90)____________current than pure silicon.

(82) positive; (83) negative; (84) opposite; (85) current; (86) sum; (87) D; (88) E; (89) E; (90) more;

The impurity added is one of two basic types: (1) donor type impurities and (2) acceptor type impurities. Donor impurities add or donate extra electrons to the material. We will consider this type first.

14 HOW DONORS INCREASE CURRENT FLOW . . . Atoms of arsenic and antimony have five electrons in their outer shell. Figure 9 shows how atoms of arsenic impurity affect the electrical properties of a semiconductor. The two arsenic atoms replace germanium atoms in the crystal structure. Four of the outer shell electrons of each arsenic atom form covalent bonds with adjoining germanium atoms. The fifth outer shell electron from each impurity atom is left over, not tied to anything. It is therefore only very loosely held to its atom. It takes only the slightest energy from heat, light, or an applied voltage to break it loose, making it a free electron.

The effect of arsenic impurity is then to add extra free electrons to the material. Since antimony also has five valence ring electrons, it will do the same thing. Arsenic and antimony are therefore (91) ______________ type impurities.

When a voltage, as shown in Fig. 9, is applied across a semiconductor with donor type impurities, the free electrons provided by the donors (electrons A and B) drift to the (92) ______________ plate. With elec-

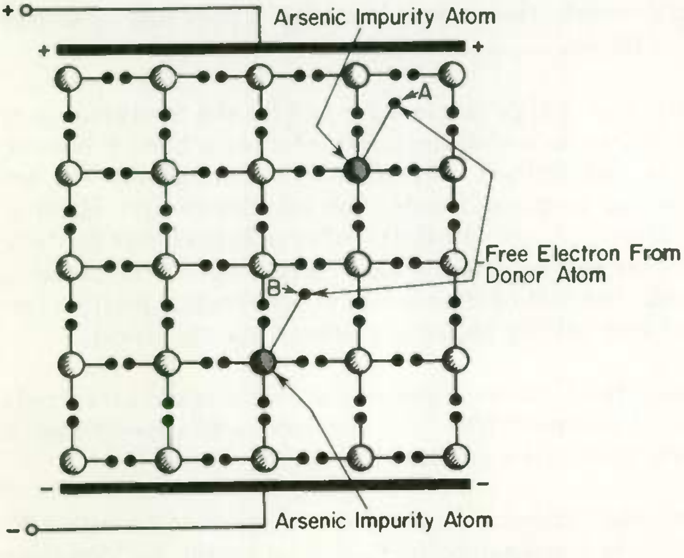

Fig. 9 Semiconductor crystal with donor impurities.

(91) donor; (92) positive;

trons A and B gone, the two arsenic impurity atoms are now (93) ______________ charged because they are each short one electron in their outer orbit. All the other atoms are neutrally charged. Therefore, with electrons A and B drawn out of the material onto the plate, the material taken as a whole is positively charged. The positive charge of the material will draw electrons from the negative plate into the material in sufficient number to maintain a neutral charge on the material. In other words, when in Fig. 9 the two free electrons are drawn to the positive plate, two electrons at the same time enter the material from the negative plate. Hence, there is at all times two free electrons in the material to balance the positive charges on the two arsenic impurity atoms. Since the free electrons within the material continually drift to the positive plate to be replaced by electrons coming up from the negative plate, this is a continuous current flow as long as a voltage is applied to the plates.

15

DONORS FORM N-TYPE MATERIAL... Current flow through a semiconductor material to which donor impurities have been added is from two sources. One source is from the breaking up of some of the covalent bonds to form free electrons and holes as charge carriers. The other source is free electrons provided by donor impurity atoms as charge carriers. In doped material as used in semiconductor products, charge carriers from the latter source are by far the greater in number. Therefore conduction in doped material is primarily by charge carriers provided by (94) ______________ atoms.

Consider further the charge carriers formed by the breaking up of covalent bonds. For each free electron formed when a bond is broken, a (95) __________ is also formed. Therefore when charge carriers are formed by breaking covalent bonds, the number of free electron charge carriers is (96) __________ to the number of hole charge carriers. That being the case and considering only current due to the breaking of covalent bonds, one half of the current is delivered by positive carriers (holes) and one half by negative carriers (free electrons).

The current provided by donor impurity atoms is made up entirely of (97) ______________ carriers. The total semiconductor current then is carried primarily by negative carriers.

Doped semiconductor materials using donor impurities are called N-type semiconductors because conduction is primarily by *N*egative charge carriers. In N-type materials the negative charge carriers are

(93) positively; (94) donor (or impurity); (95) hole; (96) equal; (97) negative;

called *majority carriers* because they carry most of the current. In N-type material, the free electrons are the (98) ______________ carriers. The holes are *minority* carriers in N-type materials, because they carry only a small part of the current. 19

WHAT HAVE YOU LEARNED?

1. Arsenic and antimony have (a) ______________ valence electrons. Germanium has (b) __________ valence electrons. If some of the atoms in a germanium crystal are replaced with arsenic atoms, free electrons, which are (c) ______________ charge carriers, are formed in the crystal, one for each (d) ______________ atom. These charge carriers can (e) ______________ electricity through the crystal. In semiconductor materials with donor impurities used in diodes and transistors, (f) *(most) (some) (little)* of the conduction is by means of the charge carriers formed by the impurity atoms. For each negative charge carrier formed by a donor atom, there (g) *(is) (is not)* a corresponding positive charge carrier in the material.

2. Besides the charge carriers formed by impurity atoms, a few charge carriers will be formed by the breaking of the covalent bonds of the germanium atoms in the crystal. The number of negative charge carriers is (a) *(more than) (equal to) (less than)* the number of positive charge carriers formed in this manner. The positive charge carriers in semiconductor materials are the (b) __________. The negative charge carriers are the (c) __________ electrons. The positive and negative charge carriers move in (d) ______________ directions when conducting current through the crystal. The total current through the crystal is the (e) __________ of the current carried by the negative charge carriers and by the positive charge carriers.

3. Semiconductor materials with donor type impurities are called (a) _____-type materials because most of the conduction takes place with (b) ______________ charge carriers. The negative charge carriers in this type material are called the (c) ______________ carriers. Since the (d) ______________ charge carriers carry very little of the current in this type material, they are known as the (e) ______________ carriers.

ANSWERS

1. (a) five; (b) four; (c) negative; (d) arsenic (or impurity); (e) conduct; (f) most; (g) is not.

(98) majority;

2. (a) equal to; (b) holes; (c) free; (d) opposite; (e) sum.

3. (a) N-(type); (b) negative; (c) majority; (d) positive; (e) minority.

16 ACCEPTORS FORM P-TYPE MATERIAL... Atoms of gallium and indium have three electrons in their valence ring. The result of adding an indium atom to a semiconductor crystal is shown in Fig. 10. The three indium valence electrons form covalent bonds to three adjoining semiconductor atoms. This leaves electron A without an electron with which to bond. As a result, electron A can readily become a free electron. When a voltage is applied across the crystal as shown, electron A is pulled away from atom (1) and drifts out of the crystal onto the positive plate. This leaves a hole at A with a (99)________________charge. This hole drifts through the crystal to the negative plate, to which it is attracted. Since the hole is a charge carrier, this constitutes a current flow.

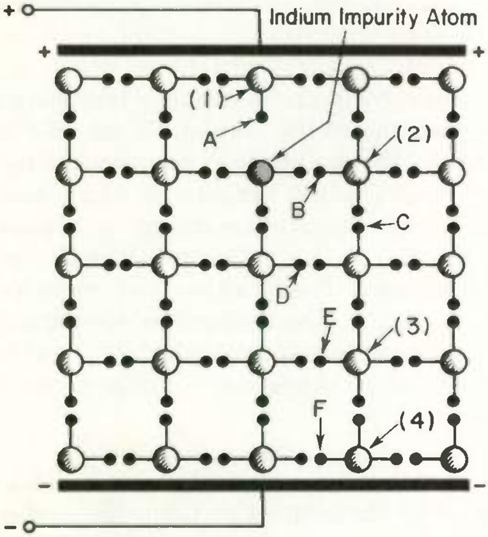

Fig. 10 **Semiconductor crystal with acceptor impurities.**

To more specifically study the positive charge movement, the hole at A attracts some nearby electrons, such as B, which moves over to A. This moves the hole down to B. The hole in a similar manner migrates to C, to D, to E, and finally to F. At F an electron is attracted from the negatively charged plate to fill the positively charged hole. Current continues to flow because as soon as electron B moved over to

(99) positive;

fill the hole at A, this electron was attracted on over to the positively charged plate. This is because an electron at A (100) *(makes) (does not make)* a covalence bond with another electron, and is therefore essentially a (101)__________electron.

Indium and gallium are called *acceptor* impurities because their atoms have but three valence electrons and consequently tend to accept an additional electron from nearby convalence bonds, creating holes. The holes act as (102)__________charge carriers, (103)__________the resistance of the semiconductor crystal.

Conduction through semiconductor material doped with acceptor impurities is primarily by means of (104)__________charge carriers. For that reason semiconductor material with acceptor impurities is referred to as P-type material.

Conduction through P-type material occurs because of the breaking up of covalence bonds not connected with the added impurities, as explained previously for N-type materials. There is therefore some conduction in P-type material carried on by negative charge carriers, but most of the current is carried by positive carriers, which are (105)__________.

Because the holes carry most of the current in P-type material, they are the majority carriers. The free electrons are the (106)__________carriers, since they carry only a small part of the current. In N-type

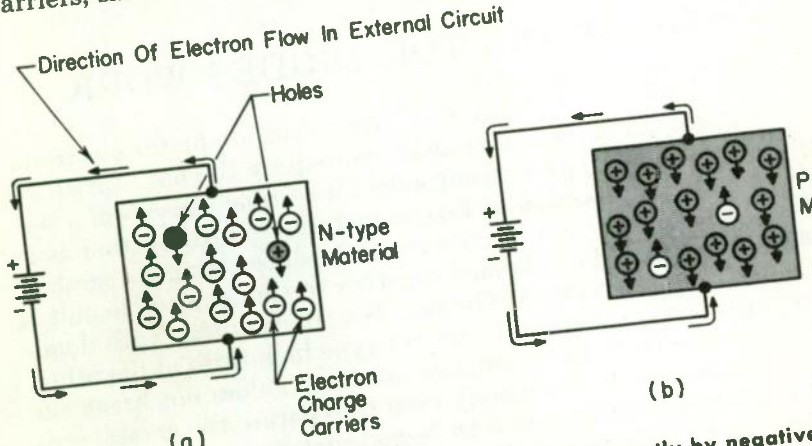

Fig. 11 **(a) Conduction through N-type materials is mostly by negative charge carriers (electrons).**
(b) Conduction through P-type material is mostly by positive carriers (holes).

(100) does not make; (101) free; (102) positive; (103) decreasing; (104) positive (105) holes; (106) minority;

material the majority carriers are the (107) ____________
and the minority carriers the (108) ____________.

A picture of conduction in N- and P- type materials is given in Fig. 11. Although the majority charge carriers in (a) move in a direction opposite to that in (b) of Fig. 11, the direction of electron flow in the external circuit is the (109)________in both figures.

WHAT HAVE YOU LEARNED?

1. When a voltage is applied across a crystal of P-material, the principal direction of charge movement within the crystal is from the (a) ____________ side of the applied voltage to the (b) ____________.

2. In a semiconductor in which the holes are the majority carriers, ____________type impurities are used.

ANSWERS

1. (a) positive; (b) negative.

2. acceptor.

HOW SEMICONDUCTOR DIODES WORK

17 THE REGIONS OF A DIODE . . . Most semiconductor electronic devices, including diodes and transistors, require the use of both N-type and P-type materials. A semiconductor rectifier consists of a section of N-type and a section of P-type material joined together as in Fig. 12. They are not however two separate slabs clamped together. Instead they are fused or blended together so that the whole unit is a single crystalline structure. The unit is a single crystal with donor type impurities in one half and acceptor type impurities in the other. The division line (called the junction) in Fig. 12 does not break the crystalline structure, but is merely used to separate the crystal area with P-material from the area with N-material. Because the crystalline structure is not broken, holes and free electrons wandering in the material can move across the junction as readily as they can move anywhere else in the material.

(107) free electrons; (108) holes; (109) same;

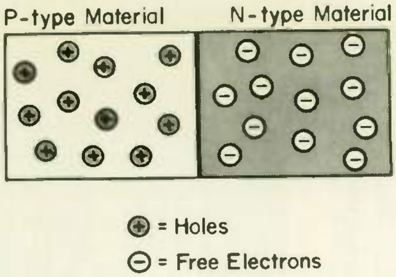

Fig. 12 The majority charge carriers in the P-material of a diode are holes, and in the N-material free electrons.

As Fig. 12 shows, there are holes on one side and free electrons on the other side of the crystal. However, these opposite charges are not attracted to each other because each region of the crystal is neutrally charged. Remember that when an electron breaks away from its atom to become a free electron it leaves an atom behind that is short one electron and hence is a (110) ________________ charged ion. The free electrons in the N-type material are balanced by an equal number of positive ions. The positive ions (111) *(are) (are not)* free to move about. Similarly, the holes in the P-type material are balanced by an equal number of (112) ____________ ions.

WHAT HAVE YOU LEARNED?

1. If the free electrons in the N-material of Fig .12 were to move over and fill in the holes in the P-material, then the N-material would be (a) ________________ charged and the P-material (b) ________________ charged.

2. If the holes in the P-material were to move over and combine with the free electrons of the N-material, the N-material would become (a) ________________ charged and the P-material (b) ________________ charged.

3. The action described in Problem 1 would never occur in total because as soon as a few of the free electrons in the N-material had moved over to the P-material, the positive charge forming on the N-material would (a) ____________ the remaining free electrons so that they would not move over to the P-material. Furthermore, the negative charge of the P-material would (b) ____________ the free electrons causing them to stay in their own area.

(110) positively; (111) are not; (112) negative;

ANSWERS

1. (a) positively; (b) negatively.

2. (a) positively; (b) negatively.

3. (a) attract; (b) repel.

18 ACTION AT THE JUNCTION . . . Since the holes and free electrons are continually wandering about at random (it is assumed that no voltage is applied to the crystal), some free electrons will wander a short distance into the P-region and some holes will wander into the N-region. Figure 13 shows what happens when they do. In the N-region of the figure there are three impurity atoms, identified as (113) _____ _____ and _____ .These (being donor impurities) normally have (114) __________ electrons in their valence rings. However, the fifth ones, not having any covalent bonds, break away as free electrons A, B, and C, leaving the impurity atoms as (115) ____________________ charged ions.

In the P-region of Fig. 13 there are three acceptor impurity atoms, J, K, and L. Acceptor atoms normally have (116) __________ electrons in their valence ring. To complete their covalent bonds with adjacent atoms, the ones in the figure have four valence electrons, and are hence (117) ____________________ charged. They obtained the extra electrons by forming holes G, H, and I. These holes are (118) ________ ___________ charged.

Electron C from the N-region has wandered into the P-region to the position shown. Here it comes close to hole H, and is pulled into that hole, eliminating both the hole and the free electron. A hole will bag an electron passing nearby like an open manhole in the street will bag an unsuspecting pedestrian.

Hole I from the P-region has wandered into the N-region to the position shown. Here it comes close to free electron B. The latter is pulled into the hole, eliminating both hole I and free electron B.

After the two sets of electrons and holes have been eliminated as described above, there will be three negative charges in the P-region, formed by ions J, K, and L. There will be one positive charge in the P-region formed by hole G. The section of the P-region shown in Fig. 13, taken in its entirety, will then be (119) __________________ charged.

(113) D, E, and F; (114) 5; (115) positively; (116) 3; (117) negatively; (118) positively; (119) negatively;

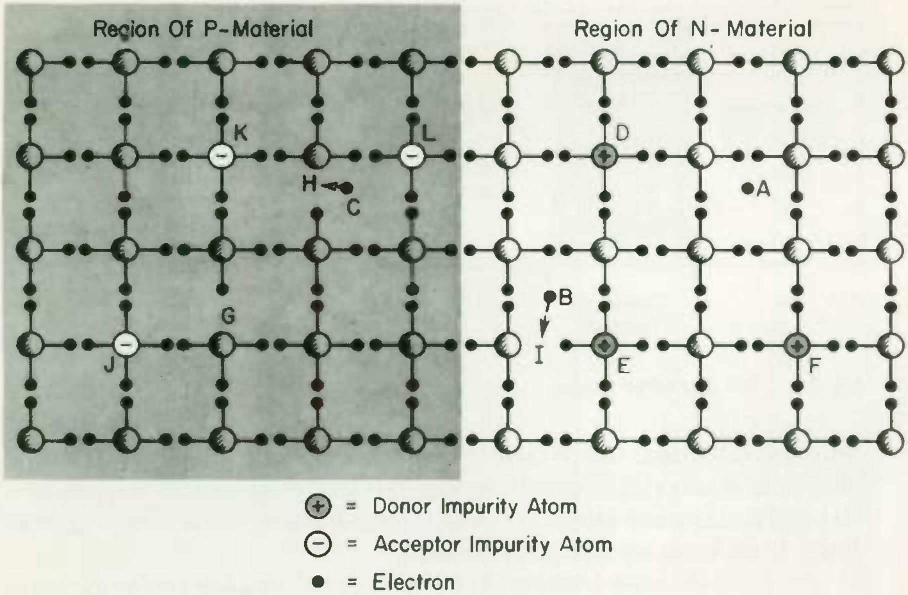

Fig. 13 **Movement of charge carriers near junction.**

Consider now the N-region. There will be three positive charges in this region, represented by ions D, E, and F. There will be one negative charge, represented by electron (120)_____. The section of the N-region shown in Fig. 13, taken as a whole, will then be (121)________ charged.

After the above action has taken place, hole G in wandering around the crystal structure is not likely to wander into the N-region because the positive charge of the hole is (122)____________ by the positive charge that the N-region has taken on. Similarly free electron A is not likely to wander into the P-region because the negative charge of the electron is repelled by the (123)____________ charge of the P-region.

19 THE DEPLETION REGION . . . In summary there are two important things that occur in the region where P-type and N-type materials come together in a crystal:

1. The N-material near the junction becomes (124)________________ charged and the P-material (125)____________ charged. The voltage between the two charged areas is about 0.1 volt. This

(120) A; (121) positively; (122) repelled; (123) negative; (124) positively; (125) negatively;

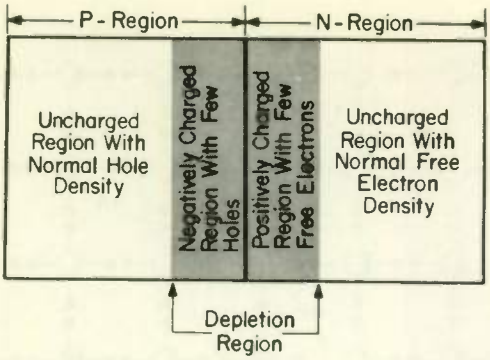

Fig. 14 **The depletion region.**

voltage is called the *barrier potential.* When that difference in charge is reached, the repelling force of like charges will be sufficient to keep further free electrons from entering the P-material and further holes from entering the N-Material.

2. Because holes and free electrons combine in the junction region, the number of holes and free electrons are much less near the border line than in the rest of the crystal. For this reason the region near the junction between N- and P-materials is called the *depletion region.*

The depletion region is shown in Fig. 14. Of course there is no sharp division between the depletion region and the rest of the crystal. As you move out from the junction between the P- and N-regions the charge density becomes less and less, and the number of charge carriers more and more. And of course, the voltage resulting from the charges becomes less as the charge diminishes.

If you placed one probe of a voltmeter at one end of the crystal and were able to pass the other probe along toward the other end within the crystal as shown in Fig. 15(a), you would get the voltage variation shown in Fig. 15(b) as the probe moved the length of the crystal. Figure 15 shows that the voltmeter will read (126)______ volts when the moving probe is at the junction between the P- and N-region. When the probe is at a point a little to the right of the junction, the voltmeter will read a maximum of (127)__________volts. When the probe is a little to the left of the junction, the voltmeter will read a maximum of (128)__________volts. At points outside of the depletion region, the voltmeter reading is nearly (129)______ volts.

A voltage difference between two dissimilar materials brought to-

(126) zero; (127) +0.05; (128) −0.05; (129) zero;

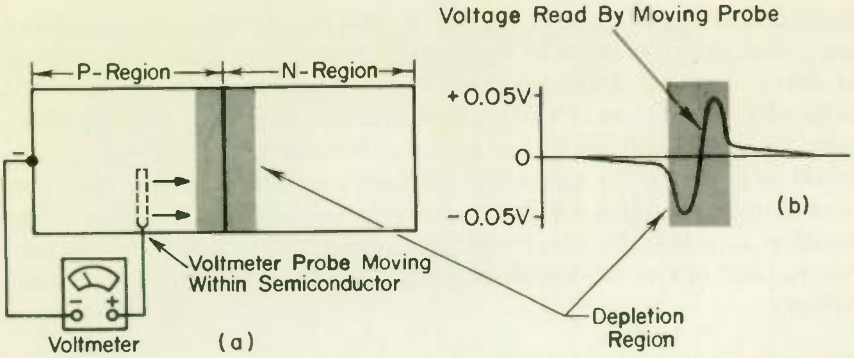

Fig. 15 A voltage is developed within the depletion region, called the barrier potential.

gether is not peculiar to the semiconductor only. Thermocouples work because of a difference in potential between two dissimilar metals. Dry cell batteries operate because there is a difference in potential between their plates when connected by a suitable electrolyte.

20 DIODE CONDUCTION IN THE FORWARD DIRECTION . . . A diode is forward biased when the (130) ____________ terminal of a battery is connected to the P-region of the diode, and the other battery terminal to the N-region. A forward biased diode (131) *(will) (will not)* conduct. You can see why by referring to Fig. 16. The positive potential applied to the P-region repels the holes toward the junction where they meet up with free electrons being repelled by the negative

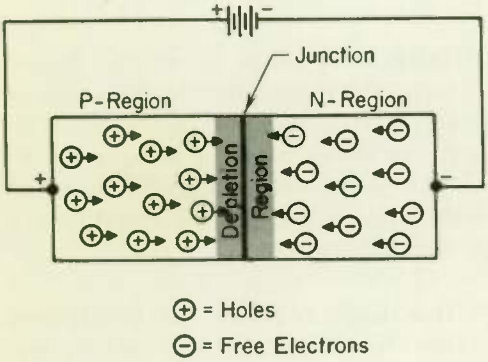

Fig. 16 Diode conduction with forward bias.

(130) positive; (131) will;

potential applied to the N-region. At the junction the free electrons are pulled into the holes to form neutral atoms, so there is no pile up of charge carriers at the junction. Neither is there a reduction of the total charge carriers in the diode. New free electrons from the battery are continually injected into the N-region at the negative terminal to make up for those lost through recombinations at the junction. Also, new holes are continually formed in the P-region at the positive terminal by electrons breaking their covalent bonds and moving out of the semiconductor material into the wire going to the battery.

There is an obstacle that keeps the diode from being an ideal low-resistance conductor in the forward direction. That obstacle is the internal voltage across the diode junction, discussed in the last topic. This voltage acts like a tiny battery, opposing current flow through the diode. Its effect is to increase the forward resistance of the diode.

Silicon diodes will not conduct for applied voltages less than approximately 0.4 volt. This is because the heat energy provided at room temperature is not sufficient to break covalent bonds and create holes and electrons. The addition of a small voltage of about 0.4 volt must be applied to give sufficient energy to the atomic structure to enable the breaking of covalent bonds. For this reason silicon diodes are not suitable for use in circuits where the signal voltage is low.

In germanium the covalent bonds break from the energy of ordinary room temperature, so that there is no minimum signal voltage that cannot be rectified. This makes germanium suitable for use at low signal levels such as in the r-f mixer circuit of a microwave receiver.

21

THE REVERSE BIASED DIODE . . . A diode is reverse biased when the (132a) ________________ terminal of a battery is connected to the P-region of the diode, and the other battery terminal to the N-region, as shown in Fig. 17. The figure shows that the holes in the P-region and the free electrons in the N-region move away from the junction under the attraction of the opposite charges provided by the battery. The result is to greatly widen the depletion region.

A continuous current through the diode requires the continuous movement of charge carriers across the diode from one battery terminal to the other. Since both the holes and free electron charge

(132a) negative;

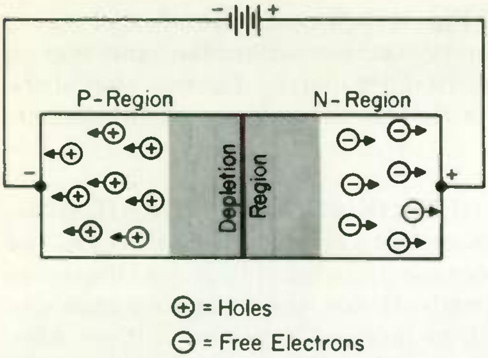

Fig. 17 **Why with reverse bias there is no conduction by majority carriers.**

carriers in Fig. 17 tend to move away from the depletion region, the charges shown in Fig. 17 do not move through the depletion region. Hence there is no current flow.

22 REVERSE CURRENT FLOW BY MINORITY CARRIERS... The charge carriers shown in Fig. 17 are the majority carriers. Doped semiconductor materials also have a few minority charge carriers, which are not shown in Fig. 17. The minority charge carriers in the P-region are (132b) ________ ________, and in the N-region (133) ________.

Because of the minority charge carriers, a semiconductor diode will conduct a small current when reverse biased. Refer to Fig. 18 and compare with Fig. 16. You will see that from the point of view of the

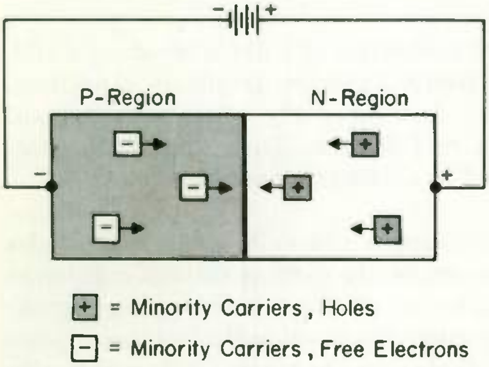

Fig. 18 **A reverse biased diode has a leakage current consisting of the minority carriers.**

(132b) free electrons; (133) holes;

minority carriers, the diode of Fig. 18 is forward biased, and consequently conduction by the minority carriers occurs the same way as by the majority carriers in Fig. 16. Fortunately, the fact that there are few minority carriers limits reverse current to a small amount.

23 REVERSE BREAKDOWN VOLTAGE AND AVALANCHE CURRENT... Increasing the reverse voltage across a diode increases the number of minority carriers, because the extra voltage provides extra energy for breaking covalent bonds. Hence, the reverse resistance of a diode (134) ______________ with an increase in reverse voltage. Also, the higher voltages increase the speed at which the charge carriers move. When the voltage becomes high enough, the charge carriers move fast enough to knock apart other covalent bonds, making additional charge carriers. The newly formed charge carriers help break more bonds, so that the effect is cumulative. The result is a very rapid increase in reverse current after a certain reverse voltage, called the breakdown voltage is reached. This is called the *avalanche current.* Good use is made of the avalanche current in the zener diode, to be studied in the next topic.

Provided overheating does not occur, a diode is not harmed by a high reverse voltage resulting in breakdown.

Important Special Semiconductor Devices

ZENER DIODES

Good use can be made of other properties of a diode besides its ability to rectify. Today diodes are used as switches, amplifiers, capacitors, voltage regulators, transducers, and for many other purposes not even remotely associated with rectification. The important special uses for diodes will be discussed in this section of your lesson.

24 THE ZENER DIODE... Zener diodes, also called avalanche diodes or silicon regulators, are most commonly used as voltage regulators and voltage limiters. They make use of the reverse voltage breakdown and avalanche current principles discussed in the last topic. Zener diodes differ from ordinary diodes in that they are specifically designed for sudden breakdown when the designed reverse voltage is reached.

(134) decreases;

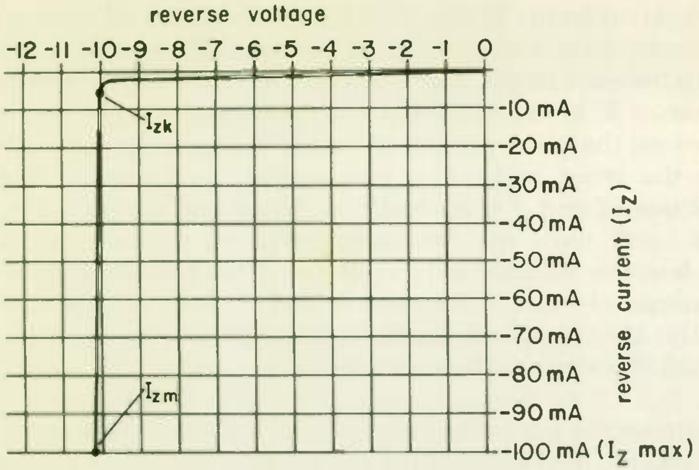

(a) Reverse voltage vs. reverse current curve

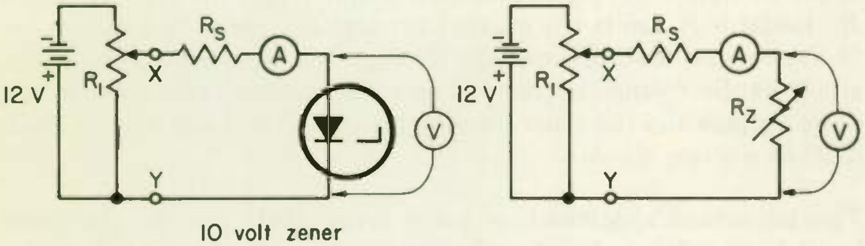

(b) Basic circuit for measuring zener breakdown

(c) Equivalent circuit

Fig. 19 Measuring zener diode breakdown characteristics.

A curve showing reverse current vs. reverse bias voltage for a typical zener diode is graphed in Fig. 19(a). Forward biasing need not be considered because zener diodes are normally not used with forward biasing. The curve shows that the reverse current is close to zero until the reserve bias voltage reaches 10 volts. When this voltage is reached, the zener breaks down and becomes a conductor for any voltage above breakdown. Figure 19(b) shows the circuit used to measure the zener characteristics plotted on the graph. Starting with zero resistance between points X and Y, there is zero volts applied to the zener. Now as R_1 is varied so that the resistance between points X and Y increases, the voltage across the zener increases, but the current through the zener, as read on ammeter A is very small. The resistance between X and Y is gradually increased and the zener current remains small until the breakdown voltage of the zener is reached, which in this instance is 10 volts. Once this point is reached, a further increase of voltage between X and Y does not increase (except slightly) the voltage across the zener, but merely causes the current through the zener to increase rapidly.

Figure 19(c) shows the equivalent circuit of the zener in this example. Variable resistor R_z represents the resistance of the zener. Before the zener breakdown voltage is reached, R_z is a very high resistance compared to the series resistance of R_s, so essentially all of the voltage between X and Y appears across R_z. Now when breakdown occurs at 10 volts, the resistance of R_z decreases so as to keep the voltage across it constant at 10 volts. As the voltage between X and Y continues to increase, the resistance of R_z continues to decrease. The voltage across R_z then remains constant, so the amount of voltage above 10 volts that appears between X and Y must be dropped across R_s. Resistor R_s limits the current through the zener to a safe value. If R_s were not used, the current through the zener would rise excessively as the voltage between X and Y rose above the zener breakdown voltage and the zener would be ruined. *Never use a zener diode without a series resistor.*

The important specifications for a zener diode are E_z, the zener breakdown voltage; I_{zk}, the minimum zener current for good regulation; and I_{zm}, the maximum safe current that the zener can handle.

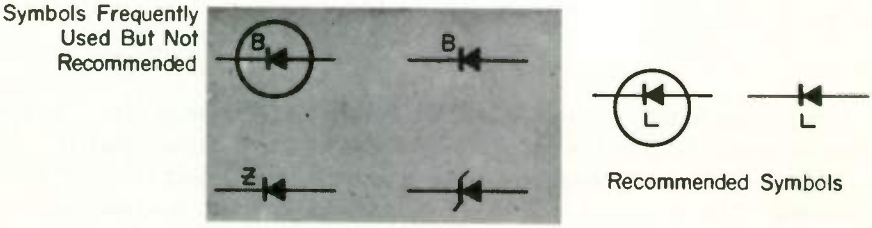

Fig. 20 Symbols used to represent a zener diode.

Specifications do not always list I_{zm}, but it can be computed from the wattage rating of the zener diode, using the formula $I_{zm} = P/E$. The maximum safe current for a 50 watt zener diode with a breakdown voltage of 10 volts is $\frac{50\ \text{W}}{10\ \text{V}} = 5$ amperes.

Figure 20 shows schematic symbols used to represent zener diodes.

WHAT HAVE YOU LEARNED?

1. Refer to Fig. 19(b). When the voltage between points X and Y is 6 volts, the voltage cross the zener diode as read on the voltmeter is (a) *(zero) (less than 6 volts) (6 volts) (10 volts).* When the voltage between X and Y is 11 volts, the voltage across the zener diode is (b) *(zero) (10 volts) (11 volts).*

2. If the current through the zener in Fig. 19(a) is 1 ma, the voltage across the diode is (a) *(less than 10 volts) (10 volts) (greater than 10 volts).* When the current through the zener is increased to 90 ma, the voltage across the diode increases to (b) ________ volts. So the voltage across the zener increases only slightly with an increase in zener current, thus it may be considered essentially constant for many applications.

3. Using Kirchhoff's law in Fig. 19(b), what will be the voltage across R_s when the voltage between points X and Y is 12 volts? (a) ________ volts. What will the current through the zener diode be at this time, assuming that R_s is 80 ohms? (b) ________ ma.

ANSWERS

1. (a) 6 volts; (b) 10 volts.

2. (a) Less than 10 volts; (b) 10.2 volts . . . See the graph of Fig. 19(a).

3. (a) 2 . . . Starting at point Y and walking up through R_1, we have a voltage rise of 12 volts. Then walking through R_s we have an unknown voltage drop, plus a drop of 10 volts across the zener diode and we are back to point Y. The drop across R_s must be the difference between the 12 volt rise and the 10 volt drop, or 2 volts.

(b) 25 ma . . . By Ohm's law, the current through R_s must be $I = E/R = 2/80 = 25$ ma.

25

MINIMUM VALUE OF I_z . . . An important characteristic of the zener diode is the minimum value of zener current I_{zk}. This is the value of zener current at the knee of the curve [point labeled I_{zk} in Fig. 19(a)]. This curve shows that there is a minimum current that must flow through the zener for the voltage across the zener to be a nearly constant value E_z [10 volts in Fig. 19 (a)]. If the current through the diode is allowed to drop below I_{zk}, the voltage across the zener will be less than E_z. The value of I_{zk} is usually a small fraction of the maximum safe zener current I_{zm} and can be found on the curves available from the manufacturer for any specific diode. The value of I_{zk} is generally on the order of a few milliamperes for zeners with an I_{zm} value of about 1 ampere.

26

THE ZENER DIODE AS A VOLTAGE REGULATOR . . . You have seen how the zener diode keeps the voltage across itself constant with variations in current flow through it. This property is very useful as a voltage regulator. In the circuit of Fig. 21, a 6 volt zener diode is used to obtain a constant 6 volts across the load R_L for variations of input voltage between 8 and 10 volts. The voltage corresponds to the voltage between X and Y in Fig. 19(b). In addition to maintaining a constant output voltage for variations in input voltage, the zener also maintains the voltage constant for changes in load current, that is, for changes in load resistance R_L. For varying values of R_L, the zener diode resistance automatically adjusts itself to keep the voltage across it constant. Remember, it can do this only as long as the current through it remains above the value of I_{zk}.

We can better understand by an example how the voltage remains constant across a zener diode while the load current varies. Refer to Fig. 21. Let's say, for example, that the input voltage E_1 is constant at 8 volts. Let's also assume that $I_{zk} = 5$ ma for the zener we are using, and that resistor R_s was so chosen that the current through the diode is 35 ma with no load resistor connected. As long as E_1 remains 8 volts, and E_2 is 6 volts, the current through R_s will remain 35 ma. If we now connect a resistor R_L in parallel with the zener, part of

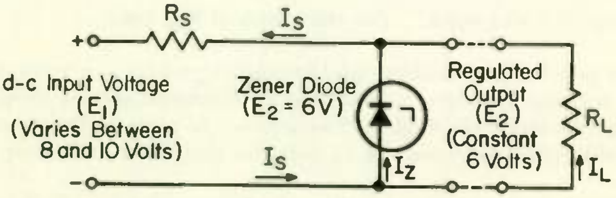

Fig. 21 **Using a zener diode as a voltage regulator.**

the 35 ma will flow through the zener and part through R_L. The voltage across R_L will remain 6 volts as long as the portion of current flowing through the diode remains above I_{zk}, which is 5 ma. Or, in other words, we could draw up to 30 ma through R_L, and the voltage across it would remain 6 volts. By drawing no more than 30 ma through R_L, we are insuring that the current through the zener never drops below I_{zk}.

So we see that the zener diode can be used as a voltage regulator because it keeps the voltage across itself constant with changes in input voltage as well as for changes in load current.

WHAT HAVE YOU LEARNED?

1. Refer to Fig. 21. Assume that R_s is 50 ohms, and I_{zk} is 3 ma. When E_1 is 9 volts and no load resistor is connected, the current through the zener diode is ________ ma.

2. Refer to Question 1. If a 200 ohm resistor R_L is placed in parallel with the zener, how much current will flow through R_L? (a) ________ ma. How much current will then be flowing through the zener diode? (b) ________ ma.

3. Refer to Question 1 and 2. Suppose that the 200 ohm resistor is still connected across the zener. If the input voltage E_1 decreases to 8 volts, how much current will flow through series resistor R_s? (a) ________ ma. What will be the voltage across the zener? (b) ________ volts.

4. Refer to Questions 1, 2, and 3. With E_1 at 8 volts, if resistor R_L is decreased to 140 ohms, the voltage E_2 will *(remain at 6 volts) (drop below 6 volts)*.

ANSWERS

1. 60 ma . . . Since the zener current is higher than I_{zk}, we know that the voltage across the zener is 6 volts. The voltage across the series resistor R_s must then be $9 - 6 = 3$ volts. The current through R_s is found by Ohm's law to be $I = E/R = 3/50 = 60$ ma. Since all of the current through R_s must flow through the zener, the current through the zener is also 60 ma.

2. (a) 30 ma . . . The voltage across the diode is 6 volts, so the voltage across R_L must also be 6 volts. The current through R_L will be $I = E/R = 6/200 = 30$ ma.

(b) 30 ma . . . The current through the zener is the difference between the current through R_s and the current through R_L, or $60 - 30 = 30$ ma.

3. (a) 40 ma . . . The voltage across R_s will now be $8 - 6 = 2$ volts. The current through R_s is then $I = E/R = 2/50 = 40$ ma.

(b) 6 volts . . . The load resistor R_L draws 30 ma with 6 volts across it, so that means that there must be 10 ma flowing through the zener. Since this is above the value of I_{zk}, the voltage across the zener is 6 volts.

4. Drop below 6 volts . . . To get six volts across R_L, the current through R_L would have to be $I = E/R = 6/140 = 42.8$ ma. But we already found that the current through R_s was only 40 ma with $E_2 = 6$ volts. So the current through the zener would drop below I_{zk} and the voltage across it would drop below 6 volts.

27 DESIGNING A ZENER REGULATOR . . . Now that we know how the zener operates as a voltage regulator, all we need to know is how to calculate the value of the series resistor R_s and we can design a regulated supply.

Let's assume that we need an output voltage E_2 of 10 volts in this design. Also assume that the maximum value of current that the load will draw is 45 ma, and the minimum value is 20 ma. The value of series resistor R_s must be low enough that there is sufficient current through it when the unregulated input voltage E_1 is at its lowest value to supply the maximum load current plus the required zener current. Let's say that E_1 can vary between 12 and 15 volts. So when E_1 is 12 volts and E_2 is 10 volts, the current through R_s must be the 45 ma load current plus the required minimum current for the zener. The actual value of I_{zk} will depend on the specific zener diode used, but we can't choose a diode until we know how much power the zener will have to dissipate. So we assume a value of I_{zk} of 5 ma, since this is typical of 1 watt and 10 watt zeners, although it may be less for smaller wattage zeners.

Assuming I_{zk} is 5 ma, and knowing that the maximum load current is 45 ma, the current through the series resistor R_s will be $45 + 5 = 50$ ma to insure good regulation. The minimum input voltage E_1 is 12 volts, so the minimum voltage across R_s will be $12 - 10 = 2$ volts. Then, using Ohm's law, we find the value of R_s to be $R = E/I = 2/0.050 = 40$ ohms. Resistor R_s cannot be larger than 40 ohms because if it were, the current through the zener would drop below I_{zk} when the load current was maximum.

We now determine the necessary wattage rating of the zener. To do this, we must find the maximum current through the zener. Maximum zener current occurs when the input voltage E_1 is at its highest value and the load current is at its lowest value. The problem is solved in the What Have You Learned? section that follows.

1. In the design just described, we are using a 10 volt zener, the input voltage E_1 varies between 12 and 15 volts, the maximum value of load current I_L is 45 ma, and R_s is 40 ohms. Now when E_1 increases to 15 volts the voltage across R_s will be (a) ________ volts. The current through R_s at that time must be (b) ________ ma. If the load current is at its maximum value of 45 ma, how much current will be flowing through the zener? (c) ________ ma.

2. With E_1 at 15 volts, how much current will flow through the zener when the load current drops to its minimum value of 20 ma? (a) ________ ma. How much power will be dissipated in the zener at this time? (b) ________ watts. You find by searching through your catalogues that a certain manufacturer supplies zeners in wattage ratings of ½ watt, 1 watt, 10 watts, and 50 watts. What wattage rating zener would you use for this supply? (c) ________ watts.

ANSWERS

1. (a) 5 volts . . . The voltage across the zener E_2 will still be 10 volts, so the voltage across R_s will be $E_1 - E_2 = 15 - 10 = 5$ volts.

(b) 125 ma . . . The voltage across R_s is 5 volts, and the resistance of R_s is 40 ohms, so the current through R_s is $I = E/R = 5/40 = 125$ ma.

(c) 80 ma . . . The zener current is the difference between the current through R_s and the current through the load resistor R_L, or $I_z = 125 - 45 = 80$ ma.

2. (a)105 ma . . . The current through R_s will still be 125 ma, so the current through the zener will be the difference between the current through R_s and the current through R_L, or $125 - 20 = 105$ ma.

(b) 1.05 watts . . . $P = E \times I = 10 \times 0.105 = 1.05$ watts.

(c) 10 watts . . . Since the maximum power that the zener will have to dissipate is 1.05 watts, a 1 watt zener would be too small to use. Since the next higher wattage rating available is 10 watts, you would have to use the 10 watt zener. Now that you have chosen a zener, you should look at the curves for that zener to make sure that I_{zk} is less than the 5 ma we used in the design. If it should be slightly higher, you will have to calculate R_s again using the new value of I_{zk}. On the other hand, if the value of I_{zk} is less than the 5 ma assumed, you may want to calculate R_s again so that a slightly higher value of resistor can be used and thereby reduce the wasted power in the zener. This would be especially useful in battery-powered equipment where conservation of power is important.

28 EFFECT OF TEMPERATURE . . . Zener diodes are obtainable for almost any breakdown voltage from a very few volts up to several hundred volts. Thus it is possible to design a simple regulated power supply for any desired output voltage within this range. Zener diodes, like resistors, vary somewhat from their stated values. They are available with breakdown voltage tolerances of 5, 10 and 20 percent. For example, the actual breakdown voltage of a 20 volt unit with 10 percent tolerance might be anywhere between 18 volts and 22 volts.

Like for all semiconductor materials, the characteristics of zener diodes are considerably affected by temperature changes. For breakdown voltages above six volts, the breakdown voltage increases with temperature increase (positive temperature coefficient). For zeners with breakdown voltages below 5 volts, the breakdown voltage decreases with temperature increase (negative temperature coefficient).

For breakdown voltages between five and six volts, the temperature coefficient may be positive, negative, or zero, depending upon the reverse current strength. However, it is small in any case. Since the temperature coefficient of zeners with breakdown voltages above 10 volts is high, regulation that is much less temperature sensitive can be obtained by connecting a suitable number of 5-volt zeners in series. For example, 6 five-volt zeners in series would have a breakdown voltage of (141) _____ volts with almost zero temperature coefficient, while the voltage breakdown point of a 30-volt zener unit will increase about 3 volts with a 20°F change in temperature.

Advantages of the use of zener diodes over other voltage regulating devices include small size and light weight. It has a longer life expectancy because of mechanical ruggedness and does not suffer from deterioration under storage. There is little aging during its operating life.

29 OTHER USES FOR ZENER DIODES . . . A zener diode is an excellent source of grid-bias voltage because it has a constant voltage drop independent of current. Figure 22(a) shows conventional cathode bias using a cathode resistor R and by-pass capacitor C. Figure 22(b) shows how a zener diode can be used in place of R and C to produce the desired voltage. The zener diode is biased to breakdown by the plate supply voltage. The plate current through the zener diode should be somewhere between I_{zk} and I_{zm}. A by-pass capacitor is not necessary in (b) because the zener itself offers a low impedance to the signal. The advantage of using the zener is that the bias voltage re-

(141) 30;

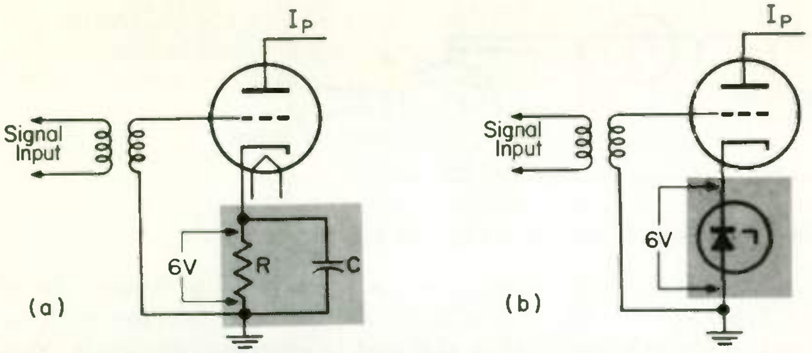

Fig. 22 A zener diode is used in (b) as a replacement for the conventional cathode bias circuit of (a).

mains a constant 6 volts for any value of plate current, I_p. In Fig. 22(a) the bias voltage will not stay at 6 volts if I_p changes.

The use of a zener diode as a voltage regulator is extended in Fig. 23 to form a voltage divider where every output voltage is regulated. The voltage between E_4 and ground is (142)_____ volts. The voltage between E_3 and ground is (143)_____ volts. The voltage between E_2 and ground is (144)_____ volts, and the voltage between E_1 and ground is (145)_____ volts.

Figure 24 shows the use of a zener diode as a meter scale expander. It is desired to read accurately a voltage which varies between 10 and 12 volts. On a 0–15 volt scale, the part of the scale between 10 and 12 volts is only 13 percent of the entire scale. In Fig. 24 the 10 to 12 volt part of the scale is expanded to occupy the entire length of the

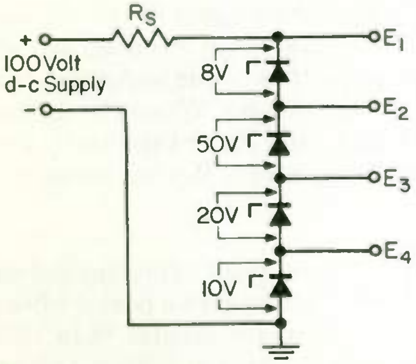

Fig. 23 A voltage divider constructed from zener diodes.

(142) 10; (143) 30; (144) 80; (145) 88;

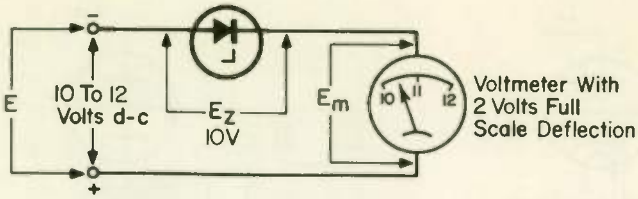

Fig. 24 **Using a zener diode for meter scale expansion.**

scale, so that a much more accurate reading is possible. A zener diode with a breakdown voltage of 10 volts is connected in series with an ordinary d-c voltmeter with a full-scale deflection of 2 volts. You have learned that a zener diode must always be operated with a (146) ________________ in series to limit the current. This is provided in the circuit of Fig. 24 by the resistance of the (147) ________________.

In Fig. 24, $E = E_z +$ (148) ______. If the voltage being measured is 10.5 volts, then the voltage across the meter is (149) _____ volts. If E is 12 volts, then E_m is (150) _____ volts. Thus you can see that if E varies between 10 and 12 volts, the voltage across the meter varies from 0 to 2 volts. By recalibrating the scale, the voltmeter can be made to read E directly. An example of the use of a scale expanding circuit would be for measuring the condition of charge of a storage battery. The battery voltage will not vary enough between charge and discharge to be read readily on an ordinary voltmeter, but the condition can be easily determined by the expanded scale circuit of Fig. 24.

Zener diodes may be used to limit the peak voltage value in a-c circuits by connecting them back-to-back, as in Fig. 25(a). No matter what the polarity of the voltage across the two diodes in series, one of them will be forward biased with a voltage drop of approximately 0.5 volt, and the other reverse biased with a voltage drop equal to the voltage rating of the zeners, which is 10 volts in Fig. 25(a). Hence the two diodes will conduct when the voltage across the two in series exceeds 10.5 volts, and will not conduct for lower voltages. When the diodes conduct the action is the same as in Fig. 21, the current drawn by the diodes and the load causing a voltage drop across R_s that keeps the output voltage from exceeding 10.5 volts.

Figure 25(a) shows an a-c signal with 15 volts peak value applied to the circuit. During the time of the positive and negative peaks, where the instantaneous value of the incoming signal is greater than 10.5 volts, the diodes conduct, so that the output peaks are clipped off at 10.5 volts as shown.

(146) resistance; (147) voltmeter; (148) E_m; (149) 0.5; (150) 2;

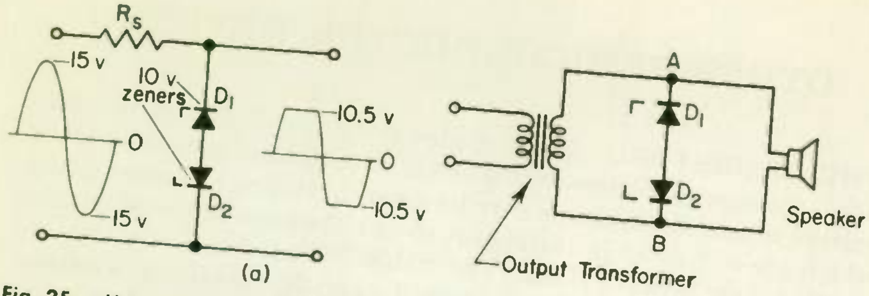

Fig. 25 **Using zener diodes as a voltage limiter.**

Figure 25(b) shows a hi-fi loudspeaker protected from overload by the use of two zeners connected back-to-back. For this usage it is not necessary to insert a resistor R_s. The impedance of the output transformer and the signal source feeding it is sufficient to drop the voltage and limit the zener diode current to a safe value. With power transformers a limiting resistor R_s must be used.

WHAT HAVE YOU LEARNED?

1. The voltmeter circuit below reads full scale deflection when the input voltage E is 50 volts. Connect a zener diode with a breakdown voltage of 40 volts into the circuit to protect the meter against overload. Be sure the diode polarity is correct.

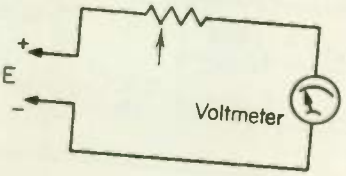

ANSWERS

1 To adjust for proper operation, apply 50 volts to the input so that the meter reads full scale. Then adjust the potentiometer until the meter indication just starts to drop, which shows that the zener is just starting to conduct. The voltage drop across R_1 is then 10 volts, and R_1 is the series resistance required to prevent damage to the zener.

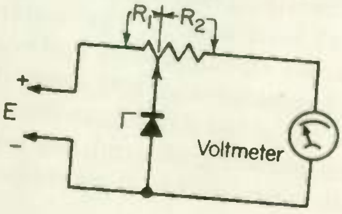

30 THE STABISTOR . . . Zener diodes are not available with breakdown voltages much less than 3 volts. In applications where a lower voltage is needed, stabistors may be used. In contrast to zener diodes which are connected in the circuit so as to be reverse biased, stabistor diodes are forward biased. The stabistor diode has a very high resistance in the forward direction until a certain "breakover" voltage is reached. The stabistor resistance then drops to a very low value and conduction occurs freely. The action of the stabistor diode is thus very similar to that of the zener, the essential difference being that the stabistor is used in the forward direction. Since breakover occurs at a very low voltage, the stabistor is frequently shunted across meter movements for overload protection.

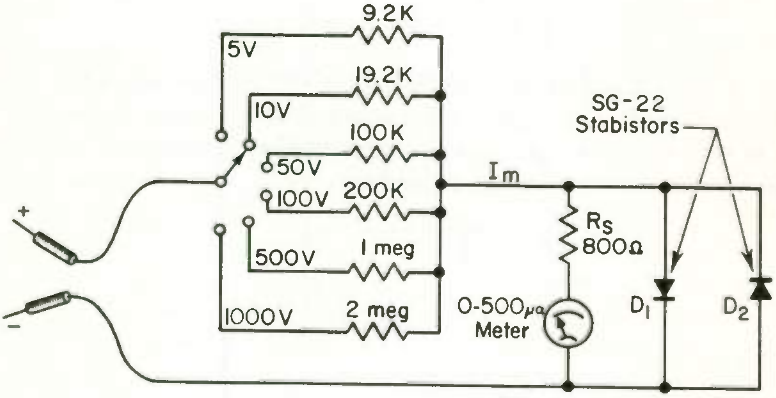

Fig. 26 **A multirange voltmeter using stabistors to protect against meter overload.**

A practical multi-range voltmeter using stabistors for meter protection is shown in Fig. 26. Resistor R_s is chosen of suitable value that the voltage drop across the stabistor diodes with full scale current (500 μa) is just below the breakover voltage of the stabistors. The breakover voltage of the SG-22 stabistors used is a little over 0.5 volt. Assuming the internal resistance of the meter movement as 200 ohms, the voltage across the diodes at full-scale deflection is (158) ______ volt. When I_m is greater than 500 μamp, diode (159) ______ conducts. The purpose of the other diode is to protect the meter against reverse current of over 500 μamp through the meter, which would occur if the test leads were reversed to the voltage being read.

(158) 0.5; (159) D_1;

31 THE TUNNEL DIODE . . . The tunnel diode is a two element semiconductor made of silicon, germanium, or gallium arsenide. It differs from other diodes in that it can be used to amplify or to oscillate, and this is its important attraction. As an amplifier or oscillator it has a number of important advantages over the transistor. The tunnel diode can be used at much higher frequencies than the transistor. Its characteristics do not change with temperature as do the characteristics of a transistor. It uses extremely little power—much less than the little power used by a transistor. It is lighter and smaller than a transistor and has a lower noise level. Unlike transistors, it is affected little by radiation, making it important for military application in this age of the atomic bomb.

These important characteristics have opened up a host of new applications which were not previously practical. This does not mean, however, that the tunnel diode will be the ultimate in amplifying devices. Since it has but two terminals, satisfactory circuit design is tricky and applications restricted.

The tunnel diode derives its name from the fact that the charge carriers "tunnel" through the barrier potential. The energy needed to tunnel through is much less than that required to climb over the barrier potential at the junction as does the ordinary diode. It is as if while driving your automobile you came upon a tunnel through the mountain and as a consequence were able to get to the other side faster and with less effort than if you had to climb the mountain.

In the tunnel diode the barrier is made especially thin by extremely heavy doping. Charge carriers approaching the narrow barrier suddenly disappear and then another charge carrier reappears on the other side of the barrier. This action takes place at the speed of light. The capacitive effect which hinders operation of ordinary diodes at high frequencies is not present in the tunnel diode. Consequently, tunnel diodes can be operated at frequencies up to thousands of megacycles.

The feature of the tunnel diode that makes it possible to use it as an amplifier or oscillator is its negative resistance. In other diodes, an increase in bias voltage brings about an increase in diode current. In the tunnel diode an increase in bias voltage over a certain range brings about a decrease in diode current. Conversely, a decrease in bias voltage increases the diode current. Any device exhibiting these phenomena is said to have negative resistance. Any device with negative resistance can be used to amplify or to oscillate. However, the use of the tunnel diode as an amplifier or oscillator is not within the range of this lesson, and so will not be discussed at this time.

32 VARACTOR DIODE . . . We have already mentioned how the capacitance across the barrier of a junction diode limits high-frequency operation. This capacitance is put to use in a class of diodes known as varactor diodes. In these diodes the capacitance is not a constant value but varies with the voltage. Thus the varactor is a variable capacitor in which the amount of capacity is varied by varying the bias voltage.

The varactor finds uses in automatic frequency control systems, frequency modulation, sweep generators, remote tuning control, and frequency multiplying circuits. It is also used in a class of amplifying and frequency converting devices known as *parametric amplifiers.* Parametric amplifiers are microwave amplifiers having as their basic element a reactance that can be varied periodically by an a-c voltage. We do not consider the varactor important enough at this time to most readers to require a discussion more than this brief mention.

33 PHOTODIODES . . . We have stated before that light (like heat) can supply enough energy to a semiconductor to break covalent bonds. There are three electrical effects that light shining on a light sensitive device can have.

a. *Photovoltaic effect*—When light falls on a rectifying contact or junction, an emf is generated across the terminals of the device. Commercial photovoltaic cells are also called photocells.

b. *Photoconductive effect*—In this case light shining on a semiconductor device reduces its resistance. The energy of the light breaks covalent bonds making additional charge carriers available. The outward effect is a reduction in resistance. So, by varying the light the resistance is varied, thereby varying the output current.

c. *Photoemissive effect*—When light falls on a photoemissive material electrons are emitted from the surface of the illuminated material. Emission from a cathode of a vacuum tube is the most common commercial use of this effect. Semiconductor devices employing the photoemissive effect are not yet commercially available.

Junction diodes exhibit both photovoltaic and photoconductive properties. Selenium also exhibits both properties. The selenium cells resemble the selenium metallic cells. The apparent difference between

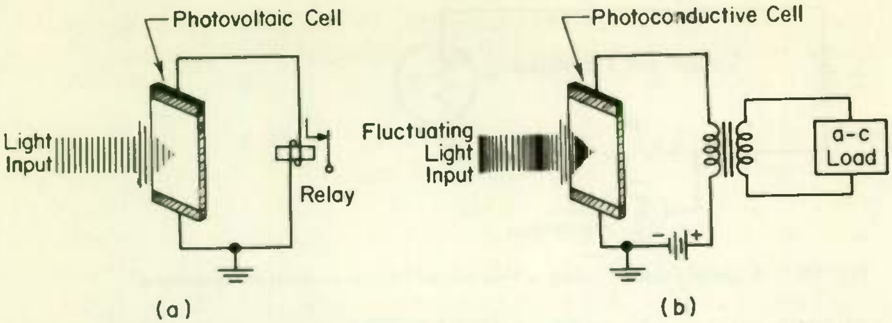

Fig. 27 **Simple circuits using a photovoltaic cell in (a) and a photoconductive cell in (b).**

cells used for their photoconductive or photovoltaic characteristics is that photoconductive cells are used with a bias battery while photocells are not. Photocells do not need batteries since the cells themselves act like batteries when exposed to light.

Photocells find application in photometric equipment and light measuring devices such as photographic light meters, and colorimeters (a device used for determining color or measuring the intensity of color). Industrial applications are in photoelectric relays, counters, and control devices. Photocells using the sun as a light source are called solar cells. Solar cells, using silicon as the semiconductor, are used almost exclusively as voltage supplies for satellites.

In Fig. 27(a) a photovoltaic cell is used with a sensitive relay, because the current generated by the light input is sufficient to operate the relay. Figure 27(b) shows the photoconductive cell used with an a-c signal (formed by the fluctuating light input). A bias voltage is required with the (160) ____________ cell, but not with the (161) ____________ cell.

34 THERMISTORS . . . Thermistors are *therm*ally sensitive res*istors*. They are devices in which the resistance varies widely with changes in temperature. They can be made from a variety of P-type semiconductors. One common type is made from manganese, nickel and cobalt oxides mixed in accurate proportions. Some thermistors are so temperature sensitive that their resistance will double with a temperature change of as little as 25 degrees Fahrenheit. In a typical type the resistance will change by 5 percent for each degree Centigrade change in temperature.

(160) photoconductive; (161) photovoltaic;

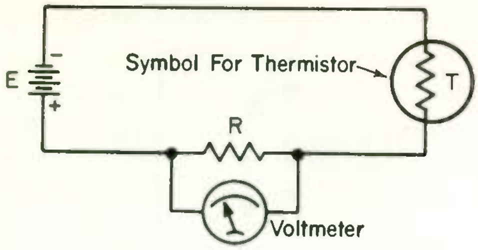

Fig. 28 **A simple circuit using a thermistor for measuring temperature.**

Most thermistors have a negative temperature coefficient. This means that as the temperature rises the resistance goes down. However, thermistors with a positive temperature coefficient, sometimes called *sensitors*, are also available. With sensitors the resistance (162) ______________ when the temperature increases.

One use for thermistors is, of course, in circuits for recognizing or measuring temperature changes. Figure 28 shows a simple remote reading thermometer using a thermistor. The thermistor is located at the point where it is desired to read the temperature, and the voltmeter (which is used to read the temperature) at any convenient location. Any change in temperature varies the resistance of the thermistor, and consequently the current through R and also the voltage across R. The voltmeter can be calibrated to read the temperature directly. If the circuit is to be accurate, the voltage E must be held constant. For that purpose you can use a (163) __________ diode.

The current flowing through the thermistor makes the change of resistance with ambient temperature change more pronounced. When the ambient temperature increases the resistance of most thermistors (164) ______________. As a result the current through the thermistor will in most circuits increase. This raises the temperature of the thermistor still further which further reduces the resistance of the thermistor. This causes the current to raise still further. The process does not continue indefinitely, however, but stops when the thermistor temperature raises high enough above the ambient temperature that the heat radiated from the thermistor equals the heat generated within.

A liquid will conduct away heat faster than air. As a result a thermistor immersed in a liquid will operate at a (165) ____________ temperature than the same thermistor operated in air at the same temperature as the liquid and at the same applied voltage. The thermistor while in a liquid will have a (166) ____________ resistance than when

(162) increases; (163) zener; (164) decreases; (165) lower; (166) higher;

it is in air. This principle is used in the circuit of Fig. 29 to automatically control the level of the liquid in the tank. When the liquid level goes down so that the thermistor is exposed to air, its resistance (167) ____________. This (168) ____________ the current through the relay coil, causing the relay to operate. The contacts of the closed relay turn on a motor which pumps additional fluid into the tank.

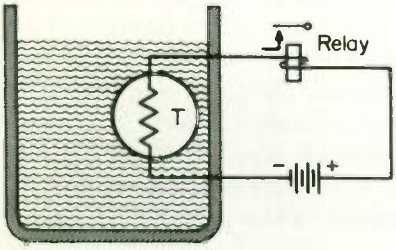

Fig. 29 Thermistor circuit for maintaining liquid level.

When the current increases through a thermistor, the thermistor does not reach its minimum resistance until some short time later it has had time to reach its maximum temperature. This time delay characteristic of a thermistor can be used in many ways. In the time delay relay of Fig. 30, the relay does not operate when the switch S is closed because the high resistance of the thermistor limits the current through the relay to too low a value for the relay to operate. After the thermistor heats, its resistance is reduced, allowing more current to flow, which operates the relay. The time delay for when the relay operates can be varied by variable resistor R.

One of the most important uses of thermistors is to compensate for changes in resistance in electrical circuits due to temperature changes. For example, the internal resistance of transistors change with temperature. A thermistor in series with the transistor lead of a critical circuit can be used to compensate for internal resistance changes, so that circuit operation does not change with temperature changes.

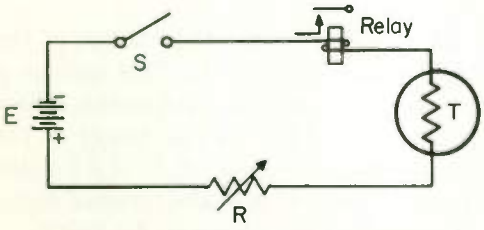

Fig. 30 The use of a thermistor to delay the closing of a relay.

(167) lowers; (168) increases;

35 VARISTORS . . . Varistors are *var*iable res*istors*. They differ from thermistors in that their resistance varies with the applied voltage rather than with temperature changes. When the voltage across a varistor is increased its resistance is lowered.

Varistors were first used as lightning arrestors. When the high voltage of a lightning discharge hit the varistor, its resistance dropped to a low value so that it passed the high current of the lightning bolt. Varistors have since found many applications in the general field of surge suppression, and voltage stabilization. They are manufactured by pressing some suitable semiconductor material with a ceramic binder under a high pressure and temperature. With respect to polarity it does not matter which way a varistor is connected into a circuit. Its characteristics are independent of the polarity of the applied voltage.

LESSON 2402-2

OPERATION OF SEMICONDUCTOR DEVICES

EXAMINATION

Circle the number of the correct answer for each question that follows. When you are finished, transfer the answers to the answer sheet by putting X's in the proper squares. When the graded answer sheet is returned to you, correct in this book any questions you may have missed. By doing so, you will have a record of the correct answers to all questions for review purposes.

1. Resistors are always used in series with
   (1) silicon diodes.
   (2) germanium diodes.
   (3) metallic diodes, especially copper-oxide.
   (4) zener diodes.
   (5) tunnel diodes.

2. The semiconductor device that takes the place of the zener diode for applications below three (3) volts is the
   (1) stabistor.
   (2) tunnel diode.
   (3) varactor diode.
   (4) non-polarized silicon diode.

3. One of the circuits in Fig. 31 is used to limit the swings of the secondary voltage to maximum values of 6.3 volts. This voltage is used as the filament supply for a precision test equipment, where an increase in filament voltage would affect the accuracy of the instrument. Assume all the zener diodes to have an E_z of 6.3 volts, with negligible voltage drop when conducting in the forward direction. Which circuit will restrict the voltage swing to 6.3 volts?
   (1) (a) (2) (b) (3) (c) (4) (d) (5) (e)

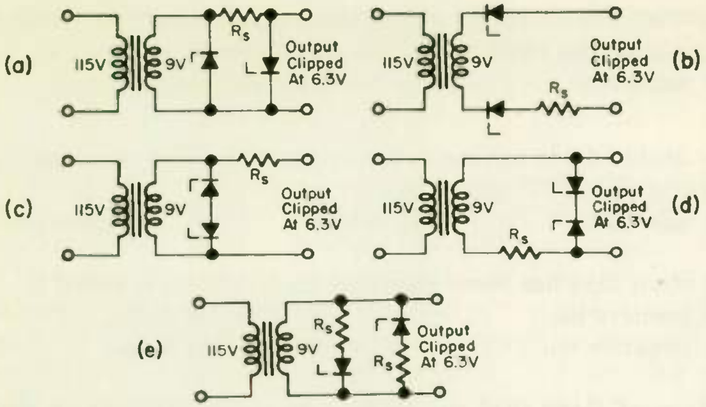

Fig. 31

4. Semiconductor materials are bound into crystalline form by
   (1) ionization.
   (2) covalence.
   (3) electrovalence.
   (4) donors and acceptors.

5. Reverse current flow through the N-type material of a diode is by means of
   (1) free electrons.
   (2) holes.
   (3) both free electrons and holes.
   (4) ions.
   (5) majority carriers.

6. A voltage is applied across a diode. As a result, the majority charge carriers in the P-region move toward the N-region. The diode is
   (1) forward biased.
   (2) reverse biased.
   (3) not biased at all.
   (4) normally forward biased, but sometimes reversed biased.

7. The lowest voltage that can be rectified with a silicon diode is
   (1) 0 volts.
   (2) 0.1 volt.
   (3) 0.2 volt.
   (4) 0.4 volt.
   (5) 0.7 volt.
   (6) 1.1 volts.

8. In which of the following is conduction greatly aided by positive charge carriers?
   (1) Battery plates.
   (2) Mercury-vapor rectifier tube.
   (3) N-type semiconductor materials.
   (4) A material with many free electrons.
   (5) Any material with few free electrons.

9. A suitable diode for rectifying weak signals might be made of
(1) a gold and silver alloy. (3) silicon.
(2) selenium. (4) germanium.

10. A suitable diode for use as a rectifier where the surrounding temperature is 125°C might be
(1) selenium. (2) silicon. (3) germanium.

11. An atom that has fewer electrons than protons is called a
(1) positive ion. (3) depleted atom.
(2) negative ion. (4) covalent atom.

12. A type of diode that can be used as an amplifier or an oscillator would be a
(1) zener diode. (4) germanium diode.
(2) tunnel diode. (5) photodiode.
(3) metallic diode. (6) No diode can be used as an amplifier.

13. To obtain a 20-volt regulated output that is subject to minimum variation from temperature changes, you could best use
(1) a zener with a 20-volt breakdown.
(2) four 5-volt zeners connected in series.
(3) temperature stabilized zeners.
(4) a thermistor in series with a 20-volt zener to compensate for temperature effects on the zener.

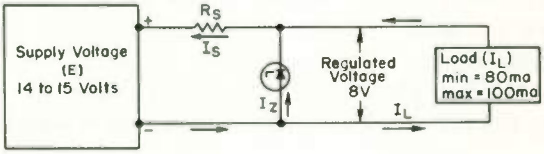

Fig. 32

The next 8 questions refer to Fig. 32.

14. In Fig. 32 the load requires a regulated 8 volts and draws a current that varies between 80 and 100 ma. The d-c output voltage from the unregulated power supply (*E*) varies between 14 and 15 volts. When the power supply voltage is 14 volts, the voltage drop across R_s is
(1) 6 volts. (4) 14 volts.
(2) 7 volts. (5) 15 volts.
(3) 8 volts. (6) not determinable from the information given.

15. If you were building this regulator, what value would you use for R_s? Assume $I_{zk} = 5$ ma.
    (1) 57.1 ohms
    (2) 60.0 ohms
    (3) 66.7 ohms
    (4) 70.6 ohms
    (5) 75.0 ohms
    (6) 82.5 ohms

16. When the power supply voltage is 15 volts, the voltage drop across R_s is _______________. (Choose your answer from the selections for Question 14.)

17. When the power supply voltage is 15 volts, the current through R_s will be
    (1) 22 ma.
    (2) 42 ma.
    (3) 85 ma.
    (4) 105 ma.
    (5) 122 ma.
    (6) 200 ma.

18. When the power supply voltage is 15 volts and the load current I_L is at its minimum value, the current through the zener will be _______________. (Choose your answer from the selections for Question 17.)

19. When the power supply voltage is 15 volts and the load current I_L is at its maximum value, the current through the zener will be _______________. (Choose your answer from the selections for Question 17.)

20. Now that you know the highest value of current that will flow through the zener and the voltage across the zener, you know that the most power that the zener will ever have to dissipate is
    (1) 0.18 watt.
    (2) 0.34 watt.
    (3) 0.85 watt.
    (4) 1.4 watts.
    (5) 3.4 watts.
    (6) 8.5 watts.
    (7) 17.6 watts.

21. In searching through your catalogues you find that a certain manufacturer supplies zeners in wattage ratings of 0.25 watt, 1 watt, 10 watts, and 50 watts. The smallest wattage zener you could safely use would be
    (1) 0.25 watt.
    (2) 1 watt.
    (3) 10 watts.
    (4) 50 watts.

22. A diode that exhibits a capacitance that varies with the voltage is a
    (1) photoemissive diode.
    (2) high-frequency germanium diode.
    (3) tunnel diode.
    (4) varactor diode.
    (5) varistor.

23. If light shining on a semiconductor causes its resistance to be reduced, the material is
    (1) photovoltaic.
    (2) photoemissive.
    (3) photoconductive.
    (4) thermaconductive.

24. You would use a bias supply with a
    (1) photovoltaic cell.
    (2) photoconductive cell.

25. Figure 33 shows a simple temperature monitoring circuit. As the temperature of the liquid in the tank changes, so will the resistance of the thermistor. This will change the current through it, and also the current through the 10 ohm resistor R_x. The voltmeter, which is calibrated directly in degrees centigrade will measure this change. If the circuit is to be accurate, we must have a constant voltage across points *A* and *B*. Therefore, we use a zener diode. At 0°C the voltage drop across R_x is 0.125 volt. What is the resistance of the thermistor?
    (1) 9.87 ohms
    (2) 79 ohms
    (3) 342 ohms
    (4) 790 ohms
    (5) 800 ohms
    (6) None of the above

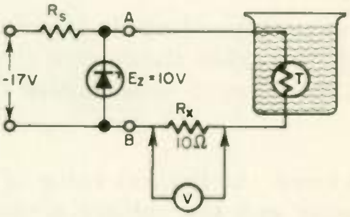

Fig. 33

26. At 150°C, the voltage drop across R_x is 5.5 volts. Does this thermistor have a positive or negative temperature coefficient?
    (1) Positive
    (2) Negative
    (3) Could be either positive or negative, but is probably negative.

27. Assuming that the maximum temperature variation is between 0° and 150°C, what should the value of R_s be if the input voltage varies between 14 and 17 volts? Assume $I_{zk} = 10$ ma.
    (1) 7.14 ohms
    (2) 17.7 ohms
    (3) 71.4 ohms
    (4) 125 ohms
    (5) 177 ohms
    (6) 714 ohms

28. The maximum power will be dissipated in the zener when
    (1) the input voltage is 14 volts, and the temperature is 0°C.
    (2) the input voltage is 17 volts and the temperature is 150°C.
    (3) the input voltage is 14 volts and the temperature is 150°C.
    (4) the input voltage is 17 volts and the temperature is 0°C.

End of Exam

Notes

"If you're made of the right material,
a hard fall results only in a high bounce."

How to Earn Tuition Credits, Cash Awards, and Technical Books

Your status as a CIE student qualifies you for an almost unlimited opportunity to earn these awards. Some students earn enough to pay their entire tuition or build a fine reference library... and there is almost no work involved!

That sounds too good to be true? Sure it does, but it can't be said any other way because those are the facts. Take a look at the simple procedure involved and see if you don't agree it is the easiest way to earn money that you know about.

1. Make up a list of friends or fellow workers that you think could benefit from a CIE Course.
2. Explain to them how CIE lessons are easy to understand; the small study units; the clear print; and the use of many illustrations. With new programmed methods of instruction, studying is made easy... it's actually fun! You can study anywhere... any time. There are no classes to attend... no other books or equipment to buy.
3. Have them send a post card to the CIE Registrar and ask for full information - MAKE SURE YOUR NAME and STUDENT NUMBER ARE ON THE CARD. (This insures your proper credit).
4. We will see to it that he gets the complete CIE story (of course your encouraging comments will help). When the enrollment is received you will receive your award.

To make your job a bit easier, we will send you a supply of printed post cards that don't even require postage stamps. Send a card or letter to

Registrar
Cleveland Institute of Electronics
1776 East 17th Street
Cleveland, Ohio 44114

and you will promptly receive a supply of Student Referral Cards.

Don't forget, a separate award for each and every new student that enrolls as the result of your identifiable referral. Make sure your prospects mention your name and number.

CLEVELAND INSTITUTE OF ELECTRONICS / CLEVELAND, OHIO

electronics

CLEVELAND INSTITUTE OF ELECTRONICS / CLEVELAND, OHIO

Easy Ways of Figuring Electronic Problems

2103-2

An AUTO-PROGRAMMED™ Lesson

ABOUT THE AUTHOR

Through over 15 years experience in helping students learn through home study, Mr. Geiger has obtained an intimate understanding of the problems facing home-study students. He has used this knowledge to make many improvements in our teaching methods. Mr. Geiger believes that students learn fastest when they actively participate in the lesson, rather than just reading it.

Mr. Geiger edits much of our new lesson material, polishing up the manuscripts we receive from subject-matter experts so that they are easily readable, contain only training useful to the student in practical work, and are written so as to teach, rather than merely presenting information.

Mr. Geiger's book, *Successful Preparation for FCC License Examinations* (published by Prentice-Hall), was chosen by the American Institute of Graphic Arts as one of the outstanding text books of the year.

This is an AUTO-PROGRAMMED* Lesson exclusive with the Cleveland Institute of Electronics. It is your assurance of the finest in technical education and training.

*Trademark

Accredited by the Accrediting Commission of the National Home Study Council

The Accrediting Commission has been approved by the U.S. Office of Education as a "nationally recognized accrediting agency".

CLEVELAND INSTITUTE OF ELECTRONICS

Easy Ways of Figuring Electronic Problems

By DARRELL L. GEIGER
Senior Project Director
Cleveland Institute of Electronics

2103-2

In this lesson you will learn...

Frontispiece: *Engineering technician checks the temperature of a sample in a solar furnace by means of a pyrometer. Searchlight furnishes the heat on cloudy days.* Courtesy, General Electric Company.

LIBRARY OF CONGRESS CATALOG CARD NUMBER: 63-12728.

THIRD EDITION/Second Revised Printing/August 1967.

2103-2

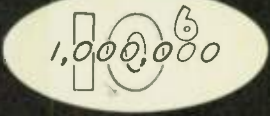

A chat with your instructor

This lesson deals with simpler methods of working problems that involve either very large or very small numbers. You will find the methods particularly useful in electronics, because you will work with values as small as 0.000,000,000,001 and as large as 1,000,000,000. Such values are easier to write, to comprehend, and to work with when written as powers of 10, often referred to as scientific notation. The subject of this lesson is how to make your work easier and your accuracy greater by using powers of 10.

You will find this lesson easy if you study it in order, topic by topic, as it is presented and work all the practice problems as you come to them. Any attempt to hurry and skip will make the lesson difficult and will increase the time required to complete it satisfactorily.

Carefully checking and rechecking your work is a must for success with mathematics. The majority of wrong answers in examination problems are due to carelessness, and they can be avoided. Don't be satisfied with just knowing the correct method of working a problem; insist upon obtaining the correct answer. The correct answer is the only answer of any practical value.

Easy Ways of Figuring Electronic Problems

SCIENTIFIC NOTATION

An engineer would write a big number like 264,000,000,000,000 as 264×10^{12}, where the exponent 12 indicates the number of zeros that belong after 264. Similarly, the very small number 0.000,000,000,000,000,211 can more conveniently be written 0.211×10^{-15}, where the exponent -15 indicates the number of zeros that belong between the decimal point and 211. This short method of writing very large and very small numbers is called *scientific notation*. It is very useful in figuring electronic problems.

1 EXPRESSING LARGE NUMBERS IN SCIENTIFIC NOTATION . . . Besides being a convenient shorthand, scientific notation has a mathematical meaning that simplifies many calculations. You will remember that 10^2 means 10×10 and that 10^3 means $10 \times 10 \times 10$, etc. By using powers of 10, we can construct the following table:

$$\begin{array}{llllll}
3450 & \times 10^1 = 3450 & \times 10 & & & = 34{,}500 \\
345 & \times 10^2 = 345 & \times 10 \times 10 & = 345 & \times 100 & = 34{,}500 \\
34.5 & \times 10^3 = 34.5 & \times 10 \times 10 \times 10 & = 34.5 & \times 1000 & = 34{,}500 \\
3.45 & \times 10^4 = 3.45 & \times 10{,}000 & & & = 34{,}500 \\
0.345 & \times 10^5 = 0.345 & \times 100{,}000 & & & = 34{,}500
\end{array}$$

This table shows that 34,500 can be written in scientific notation in several ways. *For each way, the exponent is equal to the number of places the decimal point was moved.* Thus the decimal point in 34,500 is moved 4 places to the left to become 3.45; so 34,500 becomes 3.45×10^4. (Remember that when the decimal point is not shown, it is understood to be at the end of the number.)

RULE . . . In writing in scientific notation, the exponent is equal to the number of places the decimal point is moved.

WHAT HAVE YOU LEARNED?

1. Fill in the blanks with the proper powers of 10.

(a) 481,000 = 481 × ________
(b) 29,000 = 29 × ________
(c) 71,000,000 = 71 × ________
(d) 4,300,000,000 = 43 × ________
(e) 610,000 = 6.1 × ________
(f) 248,000 = 24.8 × ________
(g) 167.3 = 1.673 × ________
(h) 10,000,000 = 1 × ________ = ________
(i) 100,000 = ________
(j) 100,000,000,000 = ________
(k) 100 = ________
(l) 10 = ________

2. Change the following numbers in scientific notation to ordinary form. (HINT: Move the decimal point to the right the number of places indicated by the exponent.)

(a) 23×10^2 = ________
(b) 288×10^5 = ________
(c) 28.8×10^5 = ________
(d) 1.456×10^7 = ________
(e) 1.456×10^2 = ________
(f) 100×10^4 = ________
(g) 10^3 = ________
(h) 10^8 = ________
(i) 10^2 = ________
(j) 10^1 = ________

ANSWERS

1. (a) 10^3 . . . Decimal point moved three places: $481_{\uparrow}\underbrace{000}$
(b) 10^3; (c) 10^6; (d) 10^8; (e) 10^5; (f) 10^4
(g) 10^2 . . . Decimal point moved two places: $1_{\uparrow}\underbrace{67.}3$
(h) 10^7; 10^7 . . . $1 \times 10^7 = 10^7$ (i) 10^5 . . . $1 \times 10^5 = 10^5$
(j) 10^{11}; (k) 10^2; (l) 10^1
2. (a) 2300 . . . Move decimal point two places to right: $23.\underbrace{00}_{\uparrow}$
(b) 28,800,000; (c) 2,880,000; (d) 14,560,000; (e) 145.6; (f) 1,000,000
(g) 1000 . . . $10^3 = 1 \times 10^3 = 1000$
(h) 100,000,000 . . . $10^8 = 1 \times 10^8 = 100,000,000$ (i) 100 (j) 10

2

ADD EXPONENTS WHEN MULTIPLYING . . . The product of 10,000 multiplied by 1000 is 10,000,000. Since 10,000,000 may be written as 10^7, 10,000 may be written as 10^4, and 1000 may be written as 10^3, we have

$$1000 \times 10{,}000 = 10{,}000{,}000$$

or

$$10^3 \times 10^4 = 10^7$$

Notice that, in $10^3 \times 10^4 = 10^7$, the exponent in the product equals the sum of the exponents in the powers of 10 being multiplied $(3 + 4 = 7)$.

RULE . . . To multiply powers of 10, add the exponents.

EXAMPLE . . . Multiply 21.3×10^2 by 4×10^3.

SOLUTION . . . $21.3 \times 10^2 \times 4 \times 10^3 = 85.2 \times 10^5$, *ans.*

EXPLANATION . . . The powers of 10 are multiplied by adding their exponents $(10^2 \times 10^3 = 10^5)$. The numbers 21.3 and 4 are multiplied by ordinary arithmetic $(4 \times 21.3 = 85.2)$.

WHAT HAVE YOU LEARNED?

1. Convert 21.3×10^2 and 4×10^3 of the preceding example to ordinary numbers and then multiply them. Show that the answer obtained is equal to 85.2×10^5 when written in scientific notation.

2. $10^3 \times 10^3 =$ ________ (Check answer by converting to ordinary notation and multiplying.)

3. 2×10^3 multiplied by $4 \times 10^3 =$ ________ (Check answer by converting to ordinary notation and multiplying.)

4. 7×10^3 multiplied by $10^3 =$ ________

5. $(6.2 \times 10^3) \times (2.1 \times 10^2) =$ ________ (This means 6.2×10^3 multiplied by 2.1×10^2.)

6. $(25 \times 10^7) \times (12 \times 10^9) =$ ________

7. $10^8 \times 10^{10} =$ ________

8. $10^2 \times 10^3 \times 10^4 =$ ________

9. $(2 \times 10^2) \times (4 \times 10^3) \times (5 \times 10^4) =$ ________

10. $10^7 \times 10^{12} \times 10^3 =$ ________

11. $10^1 \times 10^3 =$ ________

12. $10 \times 10^3 =$ ________

13. $(0.8 \times 10^2) \times (5 \times 10^8) \times (0.5 \times 10^7) =$ ________

14. To change millihenrys to microhenrys, multiply by 10^3. 3.8×10^2 millihenrys is equal to how many microhenrys?

15. (a) Write one billion (1,000,000,000) as a power of 10. (b) There are 6.24×10^9 billion electrons in a coulomb. Write the number of electrons in a coulomb in scientific notation without using the word "billion."

16. To change kilowatts to watts, multiply by 10^3. If a broadcasting station uses 75 kilowatts of power, what power in watts does it use?

ANSWERS

1. $21.3 \times 10^2 = 2130$; $4 \times 10^3 = 4000$; $2130 \times 4000 = 8{,}520{,}000 = 85.2 \times 10^5$.
2. 10^6 . . . To multiply powers of 10, add their exponents. $3 + 3 = 6$. To check, $10^3 = 1000$; $1000 \times 1000 = 1{,}000{,}000 = 10^6$.
3. 8×10^6 . . . Add the exponents and multiply the ordinary numbers as in regular arithmetic. $10^3 \times 10^3 = 10^6$, and $2 \times 4 = 8$. As a check, $2000 \times 4000 = 8{,}000{,}000 = 8 \times 10^6$.
4. 7×10^6 . . . To check, $7000 \times 1000 = 7{,}000{,}000 = 7 \times 10^6$.
5. 13.02×10^5 6. 300×10^{16} 7. 10^{18}
8. 10^9 . . . Add the three exponents: $2 + 3 + 4 = 9$, the exponent of the product.
9. 40×10^9 . . . Add the exponents and multiply the ordinary numbers. $2 \times 4 \times 5 = 40$, and $2 + 3 + 4 = 9$.
10. 10^{22} 11. 10^4 12. 10^4 . . . Remember that 10 becomes 10^1 when written in powers of 10 (see Problem 1(l) of the preceding *What Have You Learned?* section). $10^1 \times 10^3 = 10^4$.
13. 2×10^{17} . . . $0.8 \times 5 \times 0.5 = 2$; $2 + 8 + 7 = 17$.
14. 3.8×10^5 . . . $3.8 \times 10^2 \times 10^3 = 3.8 \times 10^5$
15. (a) 10^9 (b) 6.24×10^{18} . . . $6.24 \times 10^9 \times 10^9 = 6.24 \times 10^{18}$
16. 75×10^3 watts, or 75,000 watts

3 SUBTRACT EXPONENTS WHEN DIVIDING . . . We have learned that powers of 10 are multiplied by adding their exponents. Since division is the opposite of multiplication, we divide powers of 10 by subtracting the exponent of the divisor (the denominator) from the exponent of the dividend (the numerator). For example, consider dividing 10,000,000, which is equal to 10^7, by 1000, which is equal to 10^3:

$$\frac{10{,}000{,}000}{1000} = 10{,}000$$

or

$$\frac{10^7}{10^3} = 10^4$$

Notice that, when working the problem with powers of 10, the exponent of the answer is obtained by subtracting the exponent of the denominator from the exponent of the numerator: $7 - 3 = 4$. If ordinary numbers as well as powers of 10 are involved in the division, they should be handled as in ordinary division.

Example . . . $\dfrac{32 \times 10^{12}}{4 \times 10^{9}} = ?$

Solution . . . $\dfrac{32 \times 10^{12}}{4 \times 10^{9}} = 8 \times 10^{3} = 8000$

Explanation . . . $12 - 9 = 3$, the exponent. The ordinary numbers, 32 and 4, are divided as in ordinary arithmetic: $\dfrac{32}{4} = 8$.

Example . . . $\dfrac{24 \times 10^{7} \times 18 \times 10^{9}}{9 \times 10^{4} \times 6 \times 10^{2}} = ?$

Solution . . . $\dfrac{\overset{4}{\cancel{24}} \times 10^{7} \times \overset{2}{\cancel{18}} \times 10^{9}}{\cancel{9} \times 10^{4} \times \cancel{6} \times 10^{2}} = 8 \times 10^{10}$

Explanation . . . Since the ordinary numbers are handled by regular arithmetic, cancellation may be used, as shown. To find the exponent for the power of 10, add the exponents in the numerator and subtract the exponents in the denominator. $7 + 9 = 16$; $16 - 4 = 12$; $12 - 2 = 10$.

WHAT HAVE YOU LEARNED?

1. $\dfrac{10^{5}}{10^{3}} =$ ________
2. $\dfrac{21 \times 10^{11}}{3 \times 10^{5}} =$ ________
3. $\dfrac{21 \times 10^{14}}{6 \times 10^{10}} =$ ________
4. $\dfrac{3 \times 10^{8}}{6 \times 10^{2}} =$ ________
5. $\dfrac{3.5 \times 10^{9}}{18 \times 10^{4}} =$ ________
6. $\dfrac{31.6 \times 10^{5}}{10^{3}} =$ ________
7. $\dfrac{10^{7}}{4 \times 10^{5}} =$ ________
8. $\dfrac{10^{7}}{10} =$ ________
9. $\dfrac{7.41 \times 10^{11}}{10^{10}} =$ ________
10. $\dfrac{10^{7} \times 10^{4}}{10^{5}} =$ ________

11. $\dfrac{10^{12} \times 10^{9}}{10^{3} \times 10^{4}} =$ ________

12. $\dfrac{20 \times 10^{8} \times 10^{5}}{10^{5} \times 10^{3}} =$ ________

13. $\dfrac{6 \times 10^{6} \times 3 \times 10^{7}}{2 \times 10^{4}} =$ ________

14. $\dfrac{48 \times 10^{15} \times 16 \times 10^{8}}{16 \times 10^{7} \times 8 \times 10^{6}} =$ ________

15. $\dfrac{5 \times 10^{7} \times 4 \times 10^{3}}{7 \times 10^{2} \times 9 \times 10^{4}} =$ ________

16. To change hertz to megahertz, divide by 10^6. If a station is operating on a frequency of 2.472×10^8 hertz, what is the station frequency in megahertz?

17. To change meters to kilometers, divide by 10^3. Radio waves in space travel at 3×10^8 meters per second. What is their velocity in kilometers per second?

18. The moon is 0.384×10^6 kilometers away. A radio wave in the form of a radar beam is transmitted toward the moon. Upon striking the moon it is reflected and returns to earth. How much time elapses between the transmission and the reception of the signal?

ANSWERS

1. 10^2, or 100 2. 7×10^6 or 7,000,000

3. 3.5×10^4, or 35,000 . . . $\frac{21}{6} = 3.5$ 4. 0.5×10^6, or 500,000, . . . $\frac{3}{6} = 0.5$

5. 0.194×10^5, or 19,400 6. 31.6×10^2, or 3160

7. 0.25×10^2, or 25 . . . The problem is equivalent to $\frac{1 \times 10^7}{4 \times 10^5}$; $\frac{1}{4} = 0.25$. If there is an ordinary number in the denominator but none in the numerator, divide the denominator number into 1 (take its reciprocal).

8. 10^6, or 1,000,000 . . . Remember that 10 in scientific notation is equal to 10^1. Hence, $\frac{10^7}{10} = \frac{10^7}{10^1} = 10^6$.

9. 7.41×10^1, or 74.1 10. 10^6, or 1,000,000

11. 10^{14} . . . $12 + 9 = 21$; $21 - 3 = 18$; $18 - 4 = 14$.

12. 20×10^5, or 2,000,000 13. 9×10^9 14. 6×10^{10}

15. 0.317×10^4, or 3170 . . . $\frac{5 \times 4}{7 \times 9} = \frac{20}{63} = 0.317$

16. 247.2 megahertz . . . $\frac{2.472 \times 10^8}{10^6} = 2.472 \times 10^2 = 247.2$

17. 3×10^5, or 300,000, kilometers per second

18. 2.56 seconds . . . From Problem 17, waves travel at 3×10^5 kilometers per second. The distance to the moon and back again is $2 \times 0.384 \times 10^6$ kilometers. $\frac{2 \times 0.384 \times 10^6}{3 \times 10^5} = 0.256 \times 10^1 = 2.56$ seconds

4 SUBTRACTING POSITIVE AND NEGATIVE NUMBERS . . .

In the next topic you will discover that exponents can be either positive or negative. Thus in working with powers of 10, you will have to add and subtract signed numbers (numbers that may be either positive or negative). In a preceding lesson you learned the rules for adding signed numbers. If you are at all hazy about how to add signed numbers, you should review those rules right now, before going any further.

Subtraction with signed numbers is about as simple as addition, and it uses the same rules. To subtract one number from another, merely change the sign of the number being subtracted and then proceed as in addition.

EXAMPLE . . . Subtract -7 from -5.

SOLUTION . . . Since -7 is the number to be subtracted, its sign must be changed. The problem then becomes one of adding $+7$ and -5, which gives $+2$, the answer.

WHAT HAVE YOU LEARNED?

1. In the following problems subtract the lower number from the upper one. Remember that a number without a sign in front of it is a positive number. Thus both $+6$ and 6 mean positive 6.

(a) $\begin{array}{r} 14 \\ \underline{3} \end{array}$

(b) $\begin{array}{r} 14 \\ \underline{-\ 3} \end{array}$

(c) $\begin{array}{r} 3 \\ \underline{14} \end{array}$

(d) $\begin{array}{r} -14 \\ \underline{3} \end{array}$

(e) $\begin{array}{r} -14 \\ \underline{-\ 3} \end{array}$

(f) $\begin{array}{r} -\ 3 \\ \underline{-14} \end{array}$

(g) $\begin{array}{r} -\ 3 \\ \underline{14} \end{array}$

(h) $\begin{array}{r} 3 \\ \underline{-14} \end{array}$

(i) $\begin{array}{r} 5 \\ \underline{0} \end{array}$

(j) $\begin{array}{r} 0 \\ \underline{5} \end{array}$

(k) $\begin{array}{r} 0 \\ \underline{-5} \end{array}$

(l) $\begin{array}{r} 1 \\ \underline{-1} \end{array}$

(m) $\begin{array}{r} +23 \\ \underline{-18} \end{array}$

(n) $\begin{array}{r} -45 \\ \underline{-12} \end{array}$

(o) $\begin{array}{r} -12 \\ \underline{+\ 6} \end{array}$

ANSWERS

1. (a) 11; (b) 17; (c) −11; (d) −17; (e) −11
(f) 11; (g) −17; (h) 17; (i) 5; (j) −5
(k) 5; (l) 2; (m) 41; (n) −33; (o) −18

5 MEANING OF A NEGATIVE EXPONENT

. . . By remembering that to divide powers of 10 we subtract the exponent of the denominator from the exponent of the numerator, we find the value of $\frac{10^2}{10^3}$ by subtracting 3 from 2, which gives -1 for the exponent. Thus, $\frac{10^2}{10^3} = 10^{-1}$. To see what is meant by 10^{-1}, we note that $\frac{10^2}{10^3} = \frac{100}{1000} = 0.1$. Hence, $10^{-1} = 0.1$. The following calculations show us what is meant by other powers of 10 with negative exponents

$$\frac{100}{1000} = 0.1, \quad \text{or } \frac{10^2}{10^3} = 10^{-1}; \text{ hence, } 10^{-1} = 0.1$$

$$\frac{100}{10{,}000} = 0.01, \quad \text{or } \frac{10^2}{10^4} = 10^{-2}; \text{ hence, } 10^{-2} = 0.01$$

$$\frac{100}{100{,}000} = 0.001, \quad \text{or } \frac{10^2}{10^5} = 10^{-3}; \text{ hence, } 10^{-3} = 0.001$$

$$\frac{100}{1{,}000{,}000} = 0.0001, \text{ or } \frac{10^2}{10^6} = 10^{-4}; \text{ hence, } 10^{-4} = 0.0001$$

Numbers less than 1 are written as powers of 10 by using negative exponents, whereas positive exponents are used for numbers greater than 1. For numbers less than 1, the negative exponent of the 10 is equal to the number of digits to the right of the decimal point. Thus to write 0.000,001 as a power of 10, note that there are 6 digits to the right of the decimal point. Hence, 0.000,001 is equal to 10^{-6}.

6 EXPRESSING SMALL NUMBERS IN SCIENTIFIC NOTATION

. . . In Topic 1 we discussed how to write large numbers in scientific notation. Writing small numbers is just as easy: move the decimal point the other way, and indicate this by using a minus sign in front of the exponent. Thus if you move the decimal point five places to the right, as in writing 0.00021 as 21×10^{-5}, the exponent is $^{-5}$.

You can, of course, write a number in many different ways by using powers of 10. For example,

$$0.000581 = 581 \times 10^{-6}$$

or $$0.000581 = 58.1 \times 10^{-5}$$

or $$0.000581 = 5.81 \times 10^{-4}$$

or $$0.000581 = 0.581 \times 10^{-3}$$

Notice that in each case the exponent is equal to the number of places that the decimal point has been moved. When no decimal point is shown in a number, it is at the end of the number; thus in 581 it is after the 1. Here are a couple of examples to show you how we count the number of places the decimal point is moved:

$$0.\overline{0_1 0_2 0_3 5_4 8_5 1}._6 = 581 \times 10^{-6}$$

$$0.\overline{0_1 0_2 0_3 5}._4 81 = 5.81 \times 10^{-4}$$

WHAT HAVE YOU LEARNED?

1. Fill in the blanks with the proper powers of 10.

(a) $0.000045 = 45 \times$ ________
(b) $0.000045 = 4.5 \times$ ________
(c) $0.00212 = 21.2 \times$ ________
(d) $0.00000000004 = 4 \times$ ________
(e) $0.0000000518 = 5.18 \times$ ________
(f) $0.000000236 = 23.6 \times$ ________
(g) $0.00000000000472 = 472 \times$ ________
(h) $0.00000000076 = 0.76 \times$ ________
(i) $0.0000000000000031 = 0.031 \times$ ________
(j) $0.00456 = 4.56 \times$ ________
(k) $0.00039 = 390 \times$ ________
(l) $0.00000000000746 = 7.46 \times$ ________
(m) $0.0002 = 2 \times$ ________
(n) $0.0001 = 1 \times$ ________ = ________
(o) $0.00001 =$ ________
(p) $0.00000001 =$ ________

2. Change the following numbers in scientific notation to ordinary form. (HINT: Move the decimal point to the left the number of places indicated by the exponent.)

(a) $9.38 \times 10^{-4} =$ ________

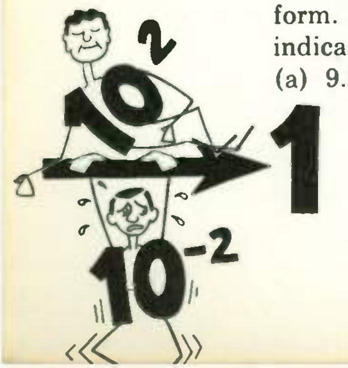

(b) $64.7 \times 10^{-4} =$ ________
(c) $0.921 \times 10^{-6} =$ ________
(d) $83.5 \times 10^{-5} =$ ________
(e) $68.2 \times 10^{-9} =$ ________
(f) $294 \times 10^{-8} =$ ________
(g) $5.32 \times 10^{-11} =$ ________
(h) $10^{-3} = 1 \times 10^{-3} =$ ________
(i) $10^{-5} =$ ________
(j) $10^{-7} =$ ________

3. In changing an ordinary number to scientific notation, the exponent of the power of 10 is (a) *(negative) (positive)* if the decimal point is moved to the right and (b) ________ if the decimal point is moved to the left.

4. In changing a number written in scientific notation to ordinary notation, move the decimal point to the (a) ________ if the exponent is negative and to the (b) ________ if the exponent is positive.

ANSWERS

1. (a) 10^{-6} . . . Decimal point moved six places: $0\underbrace{000045}$

(b) 10^{-5}; (c) 10^{-4}; (d) 10^{-11}; (e) 10^{-8}; (f) 10^{-8} (g) 10^{-14}
(h) 10^{-9}; (i) 10^{-13}; (j) 10^{-3}; (k) 10^{-6}; (l) 10^{-12}; (m) 10^{-4}
(n) 10^{-4}; 10^{-4} . . . $1 \times 10^{-4} = 10^{-4}$ (o) 10^{-5} (p) 10^{-8}
2. (a) 0.000938; (b) 0.00647; (c) 0.000000921; (d) 0.000835
(e) 0.0000000682; (f) 0.00000294; (g) 0.0000000000532; (h) 0.001
(i) 0.00001 . . . $10^{-5} = 1 \times 10^{-5} = 0.00001$ (j) 0.0000001
3. (a) Negative; (b) positive 4. (a) Left; (b) right

7 RULES FOR CONVERTING BETWEEN ORDINARY AND SCIENTIFIC NOTATION . . . By this time you no doubt understand clearly enough that the exponent of the power of 10 equals the number of places the decimal point has been moved, or is to be moved. The point we want you to get straight now is which direction of decimal point movement is associated with a positive exponent and which with a negative exponent. These two rules cover the matter:

RULE 1 . . . In changing from ordinary notation to scientific notation, the exponent is positive if the decimal point has been moved to the left and negative if the decimal point has been moved to the right.

RULE 2 . . . In changing from scientific notation to ordinary notation, move the decimal point to the right if the exponent is positive and move the decimal point to the left if the exponent is negative.

WHAT HAVE YOU LEARNED?

1. (a) Changed to ordinary notation, 6.43×10^{-7} = ________.
(b) Changed to scientific notation, 0.000000643 = 6.43 × ________.

2. In the following problems, change to the notation opposite to that given.

(a) 520.97 = 5.2097 × ________
(b) 6.5201×10^{4} = ________
(c) 3,000,000 = 3 × ________
(d) 48,652,000,000,000 = 4.8652 × ________
(e) 6.5×10^{-3} = ________
(f) 625.1×10^{-4} = ________
(g) 500,000,000,000 = 5 × ________
(h) 0.0000432 = 43.2 × ________
(i) 0.67 = 67 × ________
(j) 10^{-6} = ________
(k) 10^{5} = ________
(l) 560,000 = 0.56 × ________
(m) 10^{-2} = ________

ANSWERS

1. (a) 0.000000643; (b) 10^{-7}
2. (a) 10^{2}; (b) 65,201; (c) 10^{6}; (d) 10^{13}
(e) 0.0065; (f) 0.06251; (g) 10^{11}; (h) 10^{-6}; (i) 10^{-2}
(j) 0.000001 . . . Write as 1×10^{-6}, and then move decimal point.
(k) 100,000; (l) 10^{6}; (m) 0.01

8 MULTIPLICATION BY USING POWERS OF 10

. . . Multiplication of powers of 10 when some of the exponents are negative is no different from multiplication when all the exponents are positive, on which you have already had practice. Specifically, multiply powers of 10 by adding the exponents. However, you must observe the usual rules for adding positive and negative numbers.

EXAMPLE . . . Multiply 3.2×10^{4} by 4.8×10^{-5}.

SOLUTION . . .

$$(3.2 \times 10^{4}) \times (4.8 \times 10^{-5}) = 3.2 \times 4.8 \times 10^{4} \times 10^{-5}$$
$$= 3.2 \times 4.8 \times 10^{-1}$$
$$= 15.36 \times 10^{-1} = 1.536, \textit{ans.}$$

EXPLANATION . . . The powers of 10 are multiplied by adding their exponents $[4 + (-5) = -1]$. The numbers 3.2 and 4.8 are multiplied by ordinary arithmetic.

Example . . . Multiply 9.1×10^{11} by 4.7×10^{-9}.

Solution . . . $(9.1 \times 10^{11}) \times (4.7 \times 10^{-9}) = 9.1 \times 4.7 \times 10^{11} \times 10^{-9}$
$= 42.77 \times 10^{2} = 4277$, *ans.*

WHAT HAVE YOU LEARNED?

1. $(1.9 \times 10^{2}) \times (4.2 \times 10^{-4}) =$ __________

2. $(6.6 \times 10^{-17}) \times (2.1 \times 10^{-6}) =$ __________

3. $(4.6 \times 10^{6}) \times (40.3 \times 10^{-8}) =$ __________

4. $(2.2 \times 10^{4}) \times (9.8 \times 10^{6}) =$ __________

5. $(2.58 \times 10^{-2}) \times 10^{6} =$ __________

6. $(4 \times 10^{-4}) \times (0.025 \times 10^{5}) =$ __________

7. $(2.4 \times 10^{-6}) \times (4.8 \times 10^{7}) =$ __________

8. $9.2 \times 10^{7} \times 6.8 \times 10^{3} =$ __________

Solve Problems 9 to 12 by converting to scientific notation before multiplying.

9. $0.00000000052 \times 19{,}000{,}000 =$ __________

10. $3{,}500{,}000{,}000{,}000 \times 200{,}000{,}000{,}000 =$ __________

11. $0.000000000000000000009 \times 0.00000000000000003 =$ __________

12. $9.6 \times 10^{3} \times 0.0000000000047 =$ __________

13. The time constant (in seconds) of a circuit is the product of the resistance in ohms and the capacitance in farads. If the resistance is 2×10^{7} ohms and the capacitance is 0.4×10^{-6} farads, what is the time constant?

14. To change henrys to microhenrys, multiply by 10^{6}. If a coil has an inductance of 0.00062 henry, what is its inductance in microhenrys? (Hint: First change 0.00062 to scientific notation.)

ANSWERS

1. $7.98 \times 10^{-2} = 0.0798$ 2. 13.86×10^{-23}

3. $185.38 \times 10^{-2} = 1.8538$ 4. 21.56×10^{10}
5. 2.58×10^{4} 6. $0.1 \times 10^{1} = 1$
7. $11.52 \times 10^{1} = 115.2$ 8. 62.56×10^{10}
9. $5.2 \times 10^{-10} \times 1.9 \times 10^{7} = 9.88 \times 10^{-3}$
10. 7×10^{23} 11. 27×10^{-38} 12. 45.12×10^{-9}
13. 8 seconds . . . $(2 \times 10^{7}) \times (0.4 \times 10^{-6}) = 0.8 \times 10^{1} = 8$
14. 620 microhenrys . . . $0.00062 = 62 \times 10^{-5}$; $62 \times 10^{-5} \times 10^{6} = 62 \times 10^{1} = 620$

9 DIVIDING AND MULTIPLYING BY USING POWERS OF 10 . . . As you already know, division with powers of 10 is accomplished by subtracting the exponent of the denominator from the exponent of the numerator. However, if one or more of the exponents is negative, be sure to observe the rules for subtracting with signed numbers. For example, $\frac{10^{5}}{10^{-3}} = 10^{8}$ because -3 subtracted from $+5$ gives $+8$—the sign of the -3 is first changed (which makes it a $+3$), and then $+5$ and $+3$ are added.

EXAMPLE . . . $\dfrac{27 \times 10^{-4} \times 10^{7} \times 10^{-5}}{6 \times 10^{2} \times 10^{-6}} = ?$

SOLUTION . . . $\dfrac{27 \times 10^{-4} \times 10^{7} \times 10^{-5}}{6 \times 10^{2} \times 10^{-6}} = \dfrac{27 \times 10^{-2}}{6 \times 10^{-4}}$

$= 4.5 \times 10^{2} = 450$, *ans.*

EXPLANATION . . . First add the exponents in the numerator: $-4 + 7 - 5 = -2$. Hence, the combined power of 10 in the numerator is 10^{-2}. Next add the exponents in the denominator: $+2 - 6 = -4$, so that the combined power of 10 in the denominator is 10^{-4}. We now divide 10^{-2} by 10^{-4}, which we do by subtracting -4 from -2. Changing the sign of -4, we have $-2 + 4 = 2$, the exponent of the power of 10 in the answer. $\frac{27}{6} = 4.5$, the ordinary-number part of the answer.

WHAT HAVE YOU LEARNED?

1. (a) $\dfrac{10^{6}}{10^{10}} =$ ________ (c) $\dfrac{8 \times 10^{-6}}{10^{-10}} =$ ________

(b) $\dfrac{10^{6}}{10^{-10}} =$ ________ (d) $\dfrac{3.4 \times 10^{-6}}{10^{10}} =$ ________

2. $\dfrac{6.9 \times 10^{-3} \times 10^{4}}{3 \times 10^{2} \times 10^{6}} =$ ________

3. $\dfrac{72.6 \times 10^{6} \times 5 \times 10^{-9}}{4 \times 10^{-4}} =$ ________

4. $\dfrac{10^{6} \times 10^{-3} \times 10^{2}}{10^{12} \times 10^{-10} \times 10} =$ ________

5. $\dfrac{10^{2} \times 10^{3}}{1000 \times 10^{-2}} =$ ________

6. To work the following problems, first convert the values to scientific notation.

(a) $\dfrac{1{,}000{,}000}{10{,}000} =$ ________

(b) $\dfrac{100}{0.00001} =$ ________

(c) $\dfrac{0.00000186}{0.00006} =$ ________

(d) $\dfrac{25{,}000{,}000 \times 0.00005}{100{,}000} =$ ________

(e) $\dfrac{0.0012 \times 32{,}000}{0.048} =$ ________

7. The wavelength in meters of a radio signal is found by dividing the velocity of the signal through space (which is 300,000,000 meters per second) by the frequency in hertz. If the frequency of a certain signal is 2.5 megahertz, what is the signal wavelength? To change megahertz to hertz, multiply by 10^{6}.

ANSWERS

1. (a) 10^{-4}, or 0.0001; (b) 10^{16}
(c) 8×10^{4}, or 80,000; (d) 3.4×10^{-16}

2. 2.3×10^{-7} . . . $\dfrac{6.9 \times 10^{1}}{3 \times 10^{8}} = 2.3 \times 10^{-7}$

3. 907.5 . . . $\dfrac{363 \times 10^{-3}}{4 \times 10^{-4}} = 90.75 \times 10^{1} = 907.5$

4. 100 . . . $\dfrac{10^{5}}{10^{3}} = 10^{2} = 100$ (Don't forget that $10 = 10^{1}$, so that the denominator reads $10^{12} \times 10^{-10} \times 10^{1}$.)

5. 10,000 . . . $\dfrac{10^{2} \times 10^{3}}{10^{3} \times 10^{-2}} = \dfrac{10^{5}}{10^{1}} = 10^{4} = 10{,}000$

6. (a) 100 . . . $\dfrac{10^{6}}{10^{4}} = 10^{2} = 100$

(b) 10^7 . . . $\frac{10^2}{10^{-5}} = 10^7$

(c) 0.031 . . . $\frac{186 \times 10^{-8}}{6 \times 10^{-5}} = \frac{186}{6} \times 10^{-3} = 31 \times 10^{-3} = 0.031$

(d) 0.0125 . . . $\frac{25 \times 10^6 \times 5 \times 10^{-5}}{10^5} = \frac{125 \times 10^1}{10^5}$

$= 125 \times 10^{-4} = 0.0125$

(e) 800 . . . $\frac{\cancel{12} \times 10^{-4} \times \overset{8}{\cancel{32}} \times 10^3}{\underset{4}{\cancel{48}} \times 10^{-3}} = \frac{8 \times 10^{-1}}{10^{-3}}$

$= 8 \times 10^2 = 800$

7. 120 meters . . . 2.5 megahertz $= 2.5 \times 10^6$ hertz

$$\frac{3 \times 10^8}{2.5 \times 10^6} = 1.2 \times 10^2 = 120$$

10 MEANING OF 10^0

. . . In working electronics problems by using powers of 10, you will often come up with the value 10^0. What is this equal to? To find out, let's divide 1000 by 1000 by using scientific notation:

$$\frac{1000}{1000} = \frac{10^3}{10^3} = 10^0 = 1$$

Remembering that we divide by subtracting exponents, 10^3 divided by 10^3 must equal 10^0, since $3 - 3 = 0$. Hence, 10^0 must be equal to 1, since 1000 divided by 1000 is equal to 1. It is important that you remember that $10^0 = 1$.

EXAMPLE . . . Multiply 5×10^4 by 3×10^{-4}.

SOLUTION . . . $5 \times 10^4 \times 3 \times 10^{-4} = 15 \times 10^0$

$= 15 \times 1 = 15$, *ans.*

WHAT HAVE YOU LEARNED?

1. $4 \times 10^5 \times 6 \times 10^{-3} \times 10^{-2} =$ ______

2. $4.1 \times 10^{-2} \times 2 \times 10^{-3} \times 10^5 \times 1.1 \times 10^2 =$ ______

Work Problems 3 and 4 by first changing to scientific notation.

3. $23{,}000{,}000 \times 0.000031 =$ ______

4. $213{,}000 \times 0.00003 \times 0.000001 =$ ______

5. $\dfrac{32 \times 10^3 \times 10^6}{8 \times 10^9} =$ ________

6. $\dfrac{7 \times 10^6 \times 2.1 \times 10^{-12}}{14 \times 10^{-6}} =$ ________

7. The time constant (in seconds) of a circuit is the product of the resistance in ohms and the capacitance in farads. If the resistance is 2.5×10^6 ohms and the capacitance is 4×10^{-6} farads, what is the time constant?

ANSWERS

1. 24 . . . $(4 \times 6) \times (10^5 \times 10^{-3} \times 10^{-2}) = 24 \times 10^0 = 24$
2. 902 . . . $(4.1 \times 2 \times 1.1) \times (10^{-2} \times 10^{-3} \times 10^5 \times 10^2) = 9.02 \times 10^2 = 902$
3. 713 . . . $23 \times 10^6 \times 31 \times 10^{-6} = 713 \times 10^0 = 713$ 4. 6.39×10^{-6}
5. 4 . . . $\dfrac{32 \times 10^3 \times 10^6}{8 \times 10^9} = \dfrac{32 \times 10^9}{8 \times 10^9} = 4 \times 10^0 = 4 \times 1 = 4$
6. 1.05 . . . $\dfrac{7 \times 10^6 \times 2.1 \times 10^{-12}}{14 \times 10^{-6}} = \dfrac{14.7 \times 10^{-6}}{14 \times 10^{-6}}$
$= 1.05 \times 10^0 = 1.05 \times 1 = 1.05$
7. 10 seconds . . . $2.5 \times 10^6 \times 4 \times 10^{-6} = 10 \times 10^0 = 10$

11 SIMPLIFICATION OF POWERS OF 10 IN FRACTIONS . . . The following rule is very handy in solving problems involving powers of 10.

Rule . . . Any power of 10 in a fraction may be moved at will from the numerator to the denominator (or from the denominator to the numerator) by changing the sign of the exponent.

Example . . . Rewrite $\dfrac{(16 \times 10^4) \times (3 \times 10^{-6})}{(2 \times 10^{-7}) \times 10^3}$ so that all the exponents are positive.

Solution . . . $\dfrac{16 \times 10^4 \times 3 \times 10^{-6}}{2 \times 10^{-7} \times 10^3} = \dfrac{16 \times 3 \times 10^4 \times 10^7}{2 \times 10^6 \times 10^3}$

Explanation . . . By moving 10^{-6} from the numerator to the denominator it becomes 10^6, and by moving 10^{-7} from the denominator to the numerator it becomes 10^7. You should evaluate this expression in both the original form and the form with the negative exponents removed in order to see that both forms are equal to 2400.

In the above example, notice particularly that *only the powers of 10* are moved, and *not* any ordinary numbers associated with the powers of

10. For example, one of the values in the original expression is 3×10^{-6}. When the 10^{-6} is moved to the denominator to become 10^6, the 3 is left in the numerator.

Example . . . Find the value of $\frac{5.2}{4 \times 10^{+4}}$.

Solution . . . $\frac{5.2}{4 \times 10^{+4}} = \frac{5.2 \times 10^{-4}}{4} = 1.3 \times 10^{-4} = 0.00013$, *ans.*

Explanation . . . It is puzzling to try to work this problem by the methods in preceding topics. You have been taught to subtract the denominator exponent from the numerator exponent, but there is no numerator exponent! However, if 10^4 is moved to the numerator, where it becomes 10^{-4}, there is no longer any need to subtract. Completing the problem is then simple.

WHAT HAVE YOU LEARNED?

1. Rewrite the following problems so that all the exponents are positive, and then solve.

(a) $\frac{6 \times 10^{-8}}{2 \times 10^{-7}}$ (c) $\frac{210}{7 \times 10^{-3}}$

(b) $\frac{10^{-2} \times 10^3}{10^{-4} \times 10^5}$ (d) $\frac{1.4 \times 10^8 \times 3 \times 10^{-12}}{4 \times 10^{-5} \times 10^4}$

2. Rewrite the following problems so that all exponents are in the numerator, and then solve:

(a) $\frac{1.4 \times 10^8 \times 3 \times 10^{-12}}{4 \times 10^{-5} \times 10^4}$ (c) $\frac{8.43}{10^{-7}}$

(b) $\frac{10^{-2} \times 10^3}{10^{-4} \times 10^5}$ (d) $\frac{765}{10 \times 10^{-9}}$

3. Find the value of

(a) $\frac{56}{7 \times 10^6}$ (c) $\frac{0.00413}{10^{-4}}$

(b) $\frac{7.2}{9 \times 10^{-5}}$ (d) $\frac{2600}{10^4}$

ANSWERS

1. (a) $\frac{6 \times 10^7}{2 \times 10^8} = 3 \times 10^{-1} = 0.3$

(b) $\dfrac{10^4 \times 10^3}{10^2 \times 10^5} = \dfrac{10^7}{10^7} = 10^0 = 1$

(c) $\dfrac{210 \times 10^3}{7} = 30 \times 10^3 = 30{,}000$

(d) $\dfrac{1.4 \times 10^8 \times 3 \times 10^5}{4 \times 10^4 \times 10^{12}} = 1.05 \times 10^{-3}$

2\. (a) $\dfrac{1.4 \times 3 \times 10^8 \times 10^{-12} \times 10^5 \times 10^{-4}}{4} = 1.05 \times 10^{-3}$

(b) $10^{-2} \times 10^3 \times 10^4 \times 10^{-5} = 10^0 = 1$

(c) 8.43×10^7

(d) $765 \times 10^{-1} \times 10^9 = 765 \times 10^8$ . . . Remember that 10 is equal to 10^1 and therefore becomes 10^{-1} when transferred to the numerator.

3\. (a) 8×10^{-6}; (b) 0.8×10^5, or 80,000

(c) 41.3 . . . $0.00413 \times 10^4 = 41.3$

(d) 0.26 . . . $2600 \times 10^{-4} = 0.26$

12 CHANGING DECIMAL POINT POSITION IN SCIENTIFIC NOTATION

. . . It is often desirable to change the decimal point position in numbers written in scientific notation. For example, given the value 4.86×10^{-7}, you may want to move the decimal point so that it is after the 6. To do this, ignore the 10^{-7} for a moment and write 4.86 in scientific notation with the decimal point where you want it: $4.86 = 486 \times 10^{-2}$. Now add on the 10^{-7}, and you obtain $486 \times 10^{-2} \times 10^{-7}$. When you combine the powers of 10, you have as a final result, $4.86 \times 10^{-7} = 486 \times 10^{-9}$.

Example . . . $\dfrac{8.41 \times 10^{-6}}{346 \times 10^{-5}} = ?$

Solution . . . $\dfrac{8.41 \times 10^{-6}}{346 \times 10^{-5}} = \dfrac{841 \times 10^{-2} \times 10^{-6}}{346 \times 10^{-5}}$

$$= \frac{841 \times 10^{-8}}{346 \times 10^{-5}} = 2.43 \times 10^{-3} = 0.00243$$

Explanation . . . The reason for changing 8.41×10^{-6} to 841×10^{-8} is that in dividing 841 by 346 it is very easy to see where the decimal point goes. On the other hand, considerable care is required to get the decimal point right in dividing 8.41 by 346.

This problem, like most problems involving powers of 10, can be worked in different ways. In this and in other problems to follow we show one good way. If you work a problem somewhat differently than we do, your way is not necessarily a poorer one.

Example . . . $\dfrac{10^8}{40} = ?$

Solution . . . $\frac{10^8}{40} = \frac{1 \times 10^8}{40} = \frac{100 \times 10^{-2} \times 10^8}{40}$

$$= \frac{100 \times 10^6}{40} = 2.5 \times 10^6, \textit{ans.}$$

Explanation . . . To work out this problem, we must first have a number to divide the 40 into. To get that number, we rewrite 10^8 as 1×10^8. Since dividing 1 by 40 takes care in order to get the decimal point in the right place, we prefer to rewrite 1 as 100×10^{-2}.

Example . . . Find the reciprocal of 2.75×10^{-6}.

Solution . . . $\frac{1}{2.75 \times 10^{-6}} = \frac{1 \times 10^6}{2.75} = \frac{10 \times 10^{-1} \times 10^6}{2.75}$

$$= \frac{10 \times 10^5}{2.75} = 3.64 \times 10^5, \textit{ans.}$$

Explanation . . . The reciprocal of a number is 1 divided by that number. After moving 10^{-6} to the numerator, where it becomes 10^6, you could, if you preferred, find the value of $\frac{1}{2.75}$, which is 0.364. Then the answer becomes 0.364×10^6. Move the decimal point one place to the right to show that this answer is equal to the answer above of 3.64×10^5.

WHAT HAVE YOU LEARNED?

1. Fill in the blanks with the proper powers of 10.

(a) $391 \times 10^{-6} = 3.91 \times$ ______

(b) $391 \times 10^{+6} = 3.91 \times$ ______

(c) $0.0045 \times 10^9 = 4.5 \times$ ______

(d) $78.6 \times 10^{-3} = 786 \times$ ______

(e) $0.00004 \times 10^5 = 4 \times$ ______

(f) $0.0545 \times 10^{-4} = 5.45 \times$ ______

(g) $0.007 \times 10^{-4} = 70 \times$ ______

(h) $75 \times 10^{-12} = 0.75 \times$ ______

2. $\frac{6.75 \times 10^8}{225 \times 10^5} =$ ______

3. $\frac{0.0036 \times 10^{-6}}{9 \times 10^{-10}} =$ ______

4. $\frac{0.0437 \times 10^{-8}}{0.00021 \times 10^{-5}} =$ ______

5. $\frac{10^5}{250} =$ ________

6. $\frac{10^7}{200{,}000} =$ ________

7. $\frac{0.0001 \times 10^{-8}}{0.000001 \times 10^{-10}} =$ ________

8. Find the reciprocals of the following values:

(a) 2.5×10^{-3}	(d) 0.000005	(f) 10^7
(b) 8×10^5	(e) 250,000	(g) 13.4×10^{12}
(c) 10^{-12}		

9. Given the formula $X_C = \frac{1}{2\pi f C}$. Find the value of X_C if $\pi = 3.14$, $f = 10^6$, and $C = 35 \times 10^{-12}$.

ANSWERS

Let us repeat once more that problems involving scientific notation can generally be worked in many ways. In our solutions we show a good way. If your way of working a problem is different than ours, it is not necessarily a poorer way.

1. (a) 10^{-4} . . . $3.91 \times 10^2 \times 10^{-6} = 10^{-4}$
(b) 10^8 . . . $3.91 \times 10^2 \times 10^6 = 10^8$
(c) 10^6; (d) 10^{-4}; (e) 10^0; (f) 10^{-6}; (g) 10^{-8}; (h) 10^{-10}

2. 30 . . . $\frac{6.75 \times 10^8 \times 10^{-5}}{225} = \frac{675 \times 10^{-2} \times 10^8 \times 10^{-5}}{225} = 3 \times 10^1 = 30$

3. 4 . . . $\frac{0.0036 \times 10^{-6} \times 10^{10}}{9} = \frac{36 \times 10^{-4} \times 10^{-6} \times 10^{10}}{9} = 4 \times 10^0 = 4$

4. 0.208 . . . $\frac{437 \times 10^{-4} \times 10^{-8}}{21 \times 10^{-5} \times 10^{-5}} = 20.8 \times 10^{-2} = 0.208$

5. 400 . . . $\frac{10^5}{250} = \frac{1 \times 10^5}{250} = \frac{1000 \times 10^{-3} \times 10^5}{250} = 4 \times 10^2 = 400$

6. 50 . . . $\frac{10^7}{2 \times 10^5} = \frac{10^2}{2} = \frac{100}{2} = 50$

7. 10,000 . . . $\frac{10^{-4} \times 10^{-8}}{10^{-6} \times 10^{-10}} = \frac{10^{-12}}{10^{-16}} = 10^4 = 10{,}000$

8. (a) 400 . . . $\frac{1}{2.5 \times 10^{-3}} = \frac{10^3}{2.5} = \frac{1000}{2.5} = 400$
(b) 1.25×10^{-6} . . . $\frac{1}{8 \times 10^5} = \frac{10 \times 10^{-1} \times 10^{-5}}{8} = 1.25 \times 10^{-6}$

(c) 10^{12} (d) 2×10^{5} . . . $\frac{1}{5 \times 10^{-6}} = \frac{10 \times 10^{-1} \times 10^{6}}{5} = 2 \times 10^{5}$

(e) 4×10^{-6} . . . $\frac{1}{25 \times 10^{4}} = \frac{100 \times 10^{-2} \times 10^{-4}}{25} = 4 \times 10^{-6}$ (f) 10^{-7}

(g) 7.46×10^{-14} . . . $\frac{1}{13.4 \times 10^{12}} = \frac{100 \times 10^{-2} \times 10^{-12}}{13.4} = 7.46 \times 10^{-14}$

9. 4550 . . . $X_C = \frac{1}{2 \times 3.14 \times 10^{6} \times 35 \times 10^{-12}}$

$$= \frac{1}{6.28 \times 35 \times 10^{-6}} = \frac{10^{6}}{220}$$

$$= \frac{10^{3} \times 10^{3}}{220} = \frac{1000 \times 10^{3}}{220}$$

$$= 4.55 \times 10^{3} = 4550$$

UNITS OF MEASURE

13 PREFIXES USED IN ELECTRONICS . . . Some of the basic units used in making measurements in electronics are the volt (V), ampere (A), ohm (Ω), watt (W), henry (H), farad (F), and hertz (Hz) or cycles per second (cps or c/s). The terms "hertz" and "cycles per second" mean the same thing, and they can be used interchangeably. Quantities measured by the units used in electronics embrace an extremely wide range of values. For example, at the input of a TV receiver, we deal in millionths of a volt, whereas the picture tube may require 10,000 volts for operation.

To express these wide ranges of values in a manner easy to comprehend, larger and smaller units than the basic units mentioned above are also used. You can visualize 25 microvolts much easier than you can visualize 0.000025 volts, its equal value, so prefixes such as micro are used to form larger and smaller units from basic units. The prefixes and their meanings are given in Table 1. For example, kilo means 1000, so one kilovolt is equal to 1000 volts. Similarly, since milli means one-thousandth (0.001), one millivolt is equal to one-thousandth of a volt.

The prefix micromicro (abbreviated $\mu\mu$) is often used in place of pico, particularly in older literature. For example, 3 micromicrofarads (3 $\mu\mu$f) and 3 picofarads (3 pF) mean the same thing. Each is 3×10^{-12} farad. The use of micromicro in place of pico is not recommended. Nor is the use of compound prefixes, such as kilomega in place of giga, recommended.

You should memorize the meanings of the prefixes shown in Table 1,

Table 1
Prefixes and Their Meanings

Prefix	Symbol	Meaning	
		Scientific notation	Ordinary form
tera	T	10^{12}	1,000,000,000,000
giga	G	10^{9}	1,000,000,000
mega	M or m†	10^{6}	1,000,000
kilo	k	10^{3}	1,000
hecto	h	10^{2}	100
deka	dk or da*	10	10
deci	d	10^{-1}	0.1
centi	c	10^{-2}	0.01
milli	m†	10^{-3}	0.001
micro	μ	10^{-6}	0.000,001
nano	n	10^{-9}	0.000,000,001
pico	p	10^{-12}	0.000,000,000,001

**da* recommended, to conform with international usage.

†*mc* means *megacycles*. *m* means *milli* with other units. However, *mf*, *Mf*, or *mfd* is sometimes used in place of *μf* to mean *microfarad*.

because you will be working with them regularly in your studies and in your practical work.

14 INTERCONVERSION OF UNITS OF MEASURE . . . In practical problems in electronics, it is continually necessary to change from one unit to another. This is easy to do by using scientific notation and the conversion factors in Table 2.

Table 2

Prefix	Conversion factor
Milli and kilo	10^{3}
Micro and mega	10^{6}
Nano and giga	10^{9}
Pico (or micromicro) and tera	10^{12}

Rule . . . To convert from a basic unit to another unit, or vice versa, multiply by the appropriate conversion factor. If you are converting to a larger unit, the exponent of the conversion factor is negative. If you are converting to a smaller unit, the exponent is positive.

Example . . . Change 125 microhenrys to henrys.

Solution . . . 125 microhenrys = 125×10^{-6} henry, or 0.000125 henry, *ans.*

Explanation . . . From Table 2 we see that the proper conversion factor for micro units is 10^6. In converting from microhenrys, we are converting to a larger unit. Hence, the exponent of the conversion factor is negative.

WHAT HAVE YOU LEARNED?

1. In the following problems, pick out the larger one of the paired units:

(a) megacycle—gigacycle
(b) kilovolt—millivolt
(c) picofarad—microfarad
(d) millihenry—microhenry
(e) kilohertz—megahertz
(f) centimeter—millimeter
(g) microsecond—nanosecond

2. Write out the units for which the following are the symbols:

(a) MW
(b) mW
(c) μH
(d) ns [s is the symbol for second (time)]
(e) mA
(f) kHz
(g) MΩ
(h) kΩ
(i) mV

3. In changing farads to microfarads, you are converting to a (a) *(larger) (smaller)* unit and therefore the exponent of the conversion factor should be (b) *(positive) (negative)*. 0.00042 farad is equal to (c) __________ microfarads.

4. Change 27.1 microhenrys to henrys.

5. Change 0.00271 henry to microhenrys.

6. Change 950 hertz to kilohertz.

7. Change 0.00015 microfarad to farads.

8. Change 2.7×10^{-12} farad to picofarads.

9. Change 4.6 megohms to ohms.

10. Change 33.5 kilovolts to volts.

11. Change 2265 milliwatts to watts.

12. Change 4.58×10^{-5} volt to microvolts.

ANSWERS

1. (a) Gigacycle . . . In Table 1 the prefix higher in the table is always that of the larger unit.
(b) Kilovolt; (c) microfarad; (d) millihenry
(e) Megahertz; (f) centimeter; (g) microsecond
2. (a) Megawatt
(b) Milliwatt . . . mw is also used for milliwatt.
(c) Microhenry . . . μh is also used as the symbol.
(d) Nanosecond (e) Milliampere . . . ma is also used for milliampere.
(f) Kilohertz . . . kc is used for kilocycles per second, which means the same as kilohertz.
(g) Megohm (h) kilohm
(i) Millivolt . . . mv is also used for millivolt.
3. (a) Smaller; (b) positive
(c) 420 μF . . . $0.00042 \times 10^6 = 4.2 \times 10^{-4} \times 10^6 = 4.2 \times 10^2 = 420$
4. 27.1×10^{-6} H 5. 2710 μH . . . $0.00271 \times 10^6 = 2710$
6. 0.95 kHz 7. 1.5×10^{-10} F . . . $1.5 \times 10^{-4} \times 10^{-6} = 1.5 \times 10^{-10}$
8. 2.7 pF . . . $2.7 \times 10^{-12} \times 10^{+12} = 2.7$
9. 4.6×10^6 Ω, or 4,600,000 Ω
10. 33,500 V 11. 2.265 W
12. 45.8 μV . . . $4.58 \times 10^{-5} \times 10^6 = 45.8$ μV

15 CONVERSIONS BETWEEN NONBASIC UNITS . . . Most conversions required in practice are between basic units and other units; however, it is sometimes necessary to convert between two units neither of which is a basic unit. When this is so, the problem can be easily handled by first converting the given unit to a basic unit and then converting the basic unit to the desired unit.

Example . . . Convert 17.5 millihenrys to microhenrys.

Solution . . . 17.5 millihenrys = 17.5×10^{-3} henry
17.5×10^{-3} henry = $17.5 \times 10^{-3} \times 10^6$ microhenrys
17.5×10^3 microhenrys = 17,500 microhenrys, *ans.*

Explanation . . . To convert from millihenrys to henrys, multiply by 10^{-3}. The exponent is negative because the conversion is from a smaller unit to a larger unit. Then, to convert from henrys to microhenrys, use the conversion factor 10^6. The exponent is positive because henrys are larger than microhenrys.

WHAT HAVE YOU LEARNED?

1. Change 0.035 millihenry to microhenrys.

2. Change 3.15 microvolts to millivolts.

3. Change 100 picofarads to microfarads.

4. Change 2.45 megacycles (megahertz) to kilocycles (kilohertz).

5. Change 5 kilovolts to millivolts.

6. Change 19 microfarads to picofarads.

7. Change 13 millihenrys to microhenrys.

ANSWERS

1. 35 μH . . . First change millihenrys to henrys: 0.035 mH $= 0.035 \times 10^{-3}$ H. Then change henrys to microhenrys: 0.035×10^{-3} H $= 0.035 \times 10^{-3} \times 10^{6}\ \mu$H $= 0.035 \times 10^{3}\ \mu$H $= 35\ \mu$H.
2. 3.15×10^{-3} mV, or 0.00315 mV . . . First change microvolts to volts: 3.15 μV $= 3.15 \times 10^{-6}$ V. Then change volts to millivolts: 3.15×10^{-6} V $= 3.15 \times 10^{-6} \times 10^{3}$ mV $= 3.15 \times 10^{-3}$ mV.
3. 0.0001 μF . . . First change picofarads to farads: 100 pF $= 100 \times 10^{-12}$ F. Then change farads to microfarads: $100 \times 10^{-12} \times 10^{6} = 100 \times 10^{-6} = 0.0001$ μF.
4. 2450 kc(kHz) . . . $2.45 \times 10^{6} \times 10^{-3} = 2450$ kc(kHz)
5. 5×10^{6} mV . . . $5 \times 10^{3} \times 10^{3} = 5 \times 10^{6}$
6. 19×10^{6} pF 7. 13,000 μH

16 THE METRIC SYSTEM . . . The metric system of weights and measures is used throughout most of the world except the English-speaking countries. The units in the metric system are related by powers of 10, and this makes the system far more convenient than the English system, in which the relationships between the units follow no recognizable pattern. For example, in the English system there are 1760 yards in a mile; in the metric system there are 1000 meters in a kilometer. Obviously it is much easier to convert meters to kilometers than it is to convert yards to miles.

Although the metric system is not in popular use in the United States, it is much used in science and engineering. For your work in electronics, you will need to understand the metric system and be able to make conversions between metric and English systems. The basic unit of length in the metric system is the meter. In terms of the English system, the meter is equal to 39.37 inches, or approximately 3.28 feet. Notice that the meter is a little longer than the yard—approximately 10 per cent longer.

The prefixes of Table 1 apply to metric units of measure, too. Thus, a kilometer (km) equals 1000 (or 10^{3}) meters (m), and a centimeter (cm) equals 0.01 (or 10^{-2}) meter. The commonly used metric measures of length are the kilometer (km), the meter (m), the centimeter (cm), and the millimeter (mm). For extremely short measurements (such as the wavelength of infrared light) the unit micron (μ, greek mu) is used. Micron means "micro-meter." One micron therefore equals 10^{-6} meter.

The unit of mass or weight in the metric system is the gram (g). It is the weight of one cubic centimeter of water at its maximum density. There are approximately 28.6 grams in an ounce. The kilogram is a larger unit in common use. It is approximately equal to 2.2 pounds.

The unit of liquid capacity in the metric system is the *liter*. It is the volume of one kilogram of water at maximum density. The liter is equal to 1.057 U.S. quarts, and thus a liter is slightly greater in volume than a U.S. quart.

To convert from one metric unit to another, simply use the conversion factors in Table 2 and proceed in the same way as for converting electronic units.

WHAT HAVE YOU LEARNED?

1. 0.042 meter is equal to ______ centimeters.

2. 4265 meters is equal to ______ kilometers.

3. 25 centimeters is equal to ______ millimeters.

4. 21.8 millimeters is equal to ______ centimeters.

5. One liter is equal to (a) ______ cubic centimeters (cc), which is approximately equal to (b) ______ U.S. quart.

6. The doctor instructs the nurse to see that the patient gets a minimum of 750 cc of liquid per day. How many cups of coffee must the patient drink per day? Figure two cups as equal to one U.S. pint.

7. Radio waves travel through space at 3×10^8 meters per second. What is their velocity in kilometers per second?

8. One inch is equal to 2.54 cm. How many millimeters are there in an inch?

9. A type 6903 phototube has the most sensitive response to light with a wavelength of 45×10^{-8} meters (violet light). What is the wavelength of this light in microns?

ANSWERS

1. 4.2 cm . . . From Table 1, centi has 10^2 as its conversion factor. Since we are converting to a smaller unit, the exponent should be positive. $0.042 \times 10^2 = 4.2$ cm.
2. 4.265 km . . . $4265 \times 10^{-3} = 4.265$ km
3. 250 mm . . . First change centimeters to meters: 25 cm $= 25 \times 10^{-2}$ m. Then change meters to millimeters: 25×10^{-2} m $= 25 \times 10^{-2} \times 10^3 = 25 \times 10^1 = 250$ mm. However, since the need to convert between millimeters and centimeters is very common, it is better to remember that there are 10 millimeters in 1 centimeter. Hence, 25 cm is equal to $25 \times 10 = 250$ mm.
4. 2.18 5. (a) 1000 cc; (b) 1 U.S. quart
6. Three cups . . . Since 1000 cc is approximately a quart, the patient requires $1\frac{1}{2}$ pints of liquid, which would be three cups.
7. 3×10^5 km . . . $3 \times 10^8 \times 10^{-3} = 3 \times 10^5$
8. 25.4 mm . . . Remember that 10 mm = 1 cm. It is useful to remember that 1 inch is equal to approximately 25 mm.
9. 0.45 micron . . . $45 \times 10^{-8} \times 10^6 = 45 \times 10^{-2} = 0.45\ \mu$.

17 CONVERSION BETWEEN ENGLISH AND METRIC UNITS

. . . In your work in electronics you will sometimes need to convert between the English and metric systems. By memorizing the following two equivalents, you will be able to quickly make most conversions required in electronics work:

1 inch = 2.54 centimeters

1 meter = 3.28 feet

Example . . . The length of an antenna is 212 m. What is the length of the antenna in feet?

Solution . . . $3.28 \times 212 = 695$ ft, *ans.*

Explanation . . . Since there are 3.28 ft in 1 m, the number of feet in 212 m is 3.28×212.

WHAT HAVE YOU LEARNED?

1. If an antenna is 170 m long, what is its length in feet?

2. If an antenna is 200 ft long, what is its length in meters?

3. The thickness of a certain quartz crystal is 0.5 mm. What is its thickness in inches?

4. The frequency, in kilocycles, of a certain type of crystal is given by the formula

$$f_{\text{kc}} = \frac{1960}{\text{thickness, in millimeters}}$$

If the thickness is 0.1 in., what is the frequency?

ANSWERS

1. 558 ft 2. $\frac{200}{3.28} = 61.0$ m

3. 0.0197 in. . . . 0.5 mm $=$ 0.05 cm; $\frac{0.05}{2.54} = 0.0197$ in.

4. 772 kc . . . 0.1 in. $= 0.1 \times 2.54 = 0.254$ cm $= 2.54$ mm

$$f_{\text{kc}} = \frac{1960}{2.54} = 772 \text{ kc}$$

18 **SUBSTITUTING NUMERICAL VALUES AND SOLVING FORMULAS** . . . When you work with formulas in electronics, you must be careful to convert units given in a problem to units required by the formula. For example, most electronic formulas use frequency in hertz, or cycles per second. The frequency for a typical problem is often given in terms of kilohertz or megahertz (kilocycles or megacycles per second). It is very important that you remember to convert the kilohertz or megahertz to hertz.

Example . . . Given the formula $X_L = 2\pi fL$, where X_L is in ohms, $\pi = 3.14$, f is in hertz, and L is in henrys. Find X_L when f is 2 MHz and L is 4 μH.

Solution . . . $X_L = 2 \times 3.14 \times 2 \times 10^6 \times 4 \times 10^{-6}$
$= 50.2 \times 10^0 = 50.2\ \Omega$, *ans.*

Explanation . . . Substitute the given values into the formula. Change 2 MHz to 2×10^6 Hz, and change 4 μH to 4×10^{-6} H. Then multiply to solve for X_L.

WHAT HAVE YOU LEARNED?

1. The formula for capacitive reactance is $X_C = \frac{1}{2\pi fC}$, where X_C is in ohms, $\pi = 3.14$, f is frequency in hertz, and C is capacitance in farads. Find X_C for the following values of f and C:

(a) $f = 3$ kHz, $C = 15\ \mu$F
(b) $f = 3.4$ kHz, $C = 93$ pF
(c) $f = 1$ MHz, $C = 34$ pF
(d) $f = 3.2$ kHz, $C = 1\ \mu$F
(e) $f = 98$ MHz, $C = 0.002$ pF
(f) $f = 350$ kHz, $C = 0.05\ \mu$F
(g) $f = 900$ kHz, $C = 0.001\ \mu$F

2. The formula for inductive reactance is $X_L = 2\pi fL$, where X_L is in ohms, $\pi = 3.14$, f is frequency in hertz, and L is inductance in henrys. Find X_L for the following values of f and L:

(a) $f = 32$ MHz, $L = 19$ mH
(b) $f = 5.2$ kHz, $L = 745\ \mu$H
(c) $f = 89.2$ MHz, $L = 3\ \mu$H
(d) $f = 35.7$ MHz, $L = 36\ \mu$H
(e) $f = 195$ kHz, $L = 62.7$ mH
(f) $f = 985$ kHz, $L = 42.8\ \mu$H
(g) $f = 6894$ kHz, $L = 38.7$ mH

3. Ohm's law for current is $I = \dfrac{E}{R}$, where I is current in amperes, E is voltage in volts, and R is resistance in ohms. (a) Find the current, in milliamperes, if E equals 20 kV and R equals 2 MΩ. (b) Find I, in microamperes, if E is 100 V and R is 5 MΩ.

ANSWERS

1. (a) 3.54 Ω . . . First, C must be changed to farads and f to hertz. 15 μF $= 15 \times 10^{-6}$ F; 3 kHz $= 3 \times 10^3$ Hz.

$$X_C = \frac{1}{6.28 \times 15 \times 10^{-6} \times 3 \times 10^3}$$
$$= \frac{1}{283 \times 10^{-3}} = \frac{10^3}{283} = \frac{1000}{283} = 3.54\ \Omega$$

(b) 5.04×10^5 Ω; (c) $4.68 \times 10^3 = 4680$ Ω; (d) 49.8 Ω
(e) 8.12×10^5 Ω; (f) 9.09 Ω; (g) 177 Ω
2. (a) 3.82×10^6 Ω; (b) 24.3 Ω; (c) $1.68 \times 10^3 = 1680$ Ω
(d) 8070 Ω; (e) 7.68×10^4 Ω; (f) 264 Ω; (g) 1.67×10^6 Ω
3. (a) $I = 10 \times 10^{-3}$ A $= 10$ mA; (b) 20 μA

19

FINDING POWERS AND ROOTS OF POWERS OF 10 . . . To find a certain power of a power of 10, multiply the exponent of the power of 10 by the power desired. To find a certain root of a power of 10, divide the exponent of the power of 10 by the root desired.

EXAMPLE . . . Find the square of 3×10^4.

SOLUTION . . . $(3 \times 10^4)^2 = 3^2 \times (10^4)^2 = 9 \times 10^8$, *ans.*

EXPLANATION . . . To square a power of 10, multiply the exponent of the power of 10 by 2. $2 \times 4 = 8$; hence, 10^8 is the square of 10^4.

EXAMPLE . . . Find the square root of 16×10^{12}.

SOLUTION . . . $\sqrt{16 \times 10^{12}} = \sqrt{16} \times \sqrt{10^{12}} = 4 \times 10^6$, *ans.*

EXPLANATION . . . Extract the square root of the whole number and the power separately. The root of the power of 10 is found by dividing the exponent by 2.

EXAMPLE . . . Find the square root of 8.1×10^7.

SOLUTION . . . $\sqrt{8.1 \times 10^{7}} = \sqrt{8.1 \times 10^{1} \times 10^{6}} = \sqrt{81 \times 10^{6}}$
$\sqrt{81 \times 10^{6}} = \sqrt{81} \times \sqrt{10^{6}} = 9 \times 10^{3} = 9000$, *ans.*

EXPLANATION . . . The exponent 7 in the original form of the problem is not evenly divisible by 2. However, since $10^{1} \times 10^{6}$ equals 10^{7}, we can rewrite the problem as $\sqrt{8.1 \times 10^{1} \times 10^{6}}$. Combining the first two numbers gives $\sqrt{81 \times 10^{6}}$. Since the exponent is now even, the root can be extracted as in the preceding example.

EXAMPLE . . . Find the square root of 8.1×10^{-7}.

SOLUTION . . . $\sqrt{8.1 \times 10^{-7}} = \sqrt{8.1 \times 10^{1} \times 10^{-8}}$
$= \sqrt{81 \times 10^{-8}}$
$= \sqrt{81} \times \sqrt{10^{-8}}$
$= 9 \times 10^{-4} = 0.0009$, *ans.*

EXPLANATION . . . Since, as in the preceding example, the exponent -7 is not evenly divided by 2, the first step is to rewrite 10^{-7} as $10^{1} \times 10^{-8}$. The procedure from this point is the same as for the preceding example.

WHAT HAVE YOU LEARNED?

1. Square the following values:

(a) 4×10^{7}
(b) 2×10^{-5}
(c) 9×10^{1}
(d) 4×10^{-4}
(e) 10^{6}
(f) 1×10^{-2}
(g) 1.5×10^{3}

2. Extract the following square roots:

(a) $\sqrt{10^{14}}$
(b) $\sqrt{10^{-10}}$
(c) $\sqrt{10^{5}}$
(d) $\sqrt{625 \times 10^{16}}$
(e) $\sqrt{12.1 \times 10^{9}}$
(f) $\sqrt{2.5 \times 10^{-3}}$
(g) $\sqrt{9 \times 16 \times 10^{4}}$

3. Solve the following problems:

(a) $(2\pi \times 155 \times 10^{3} \times 12 \times 10^{-4})^{2}$
(b) $\sqrt{21.5 \times 10^{-6} \times 2.24 \times 10^{-12}}$
(c) $\sqrt{0.00003 \times 10^{-6} \times 0.000114}$
(d) $\dfrac{1}{\sqrt{0.004 \times 10^{-6} \times 26 \times 10^{-12}}}$
(e) $\dfrac{1}{2\pi\sqrt{0.081 \times 10^{-3} \times 0.0007 \times 10^{-6}}}$

4. The formula for resonant frequency is $f = \dfrac{1}{2\pi\sqrt{LC}}$ where L is the

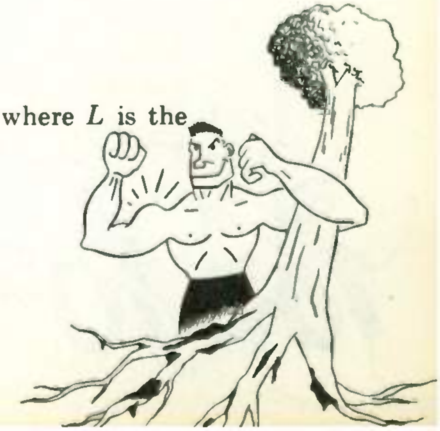

inductance in henrys, C is the capacitance in farads, and f is the frequency in hertz. Find the frequency in *kilohertz* for the following values of L and C.

(a) $L = 24\ \mu\text{H}$; $C = 250\ \text{pF}$
(b) $L = 47\ \mu\text{H}$; $C = 0.004\ \mu\text{F}$
(c) $L = 3.7\ \text{mH}$; $C = 22\ \text{pF}$
(d) $L = 0.008\ \text{mH}$; $C = 0.036\ \mu\text{F}$
(e) $L = 9\ \mu\text{H}$; $C = 438\ \text{pF}$

5. The formula for finding the capacitance needed to resonate at a certain frequency is $C = \dfrac{1}{(2\pi f)^2 L}$, where f is the frequency in hertz, L is the inductance in henrys, and C is the capacitance in farads. Find C in *microfarads* for the values of f and L given.

(a) $f = 100\ \text{kHz}$; $L = 600\ \mu\text{H}$
(b) $f = 750\ \text{kHz}$; $L = 30\ \text{mH}$
(c) $f = 2.5\ \text{MHz}$; $L = 0.5\ \mu\text{H}$

ANSWERS

1. (a) 16×10^{14}; (b) 4×10^{-10}; (c) 81×10^{2}; (d) 16×10^{-8}
(e) 10^{12}; (f) 1×10^{-4}; (g) 2.25×10^{6}

2. (a) 10^{7}; (b) 10^{-5}; (c) $\sqrt{10} \times \sqrt{10^4} = 3.16 \times 10^{2}$; (d) 25×10^{8}
(e) $\sqrt{121} \times \sqrt{10^8} = 11 \times 10^{4}$; (f) 5×10^{-2}; (g) 12×10^{2}

3. (a) 137×10^{4} . . . $(6.28 \times 155 \times 12 \times 10^{-1})^2 =$

$$(6.28 \times 1.55 \times 10^2 \times 1.2 \times 10^1 \times 10^{-1})^2 = (11.7 \times 10^2)^2 = 137 \times 10^4$$

(b) 6.94×10^{-9} . . . $\sqrt{48.2 \times 10^{-18}} = 6.94 \times 10^{-9}$

(c) 5.85×10^{-8} . . .

$$\sqrt{3 \times 10^{-5} \times 10^{-6} \times 1.14 \times 10^{-4}} = \sqrt{3.42 \times 10^{-15}}$$
$$\sqrt{34.2 \times 10^{-1} \times 10^{-15}} = 5.85 \times 10^{-8}$$

(d) 3.11×10^{9} . . .

$$\frac{1}{\sqrt{10.4 \times 10^{-20}}} = \frac{1}{3.22 \times 10^{-10}} = \frac{10^{10}}{3.22} = \frac{10 \times 10^9}{3.22} = 3.11 \times 10^9$$

(e) 6.69×10^{5}

4. (a) 2050 kHz . . . First change microhenrys to henrys and picofarads to farads. $24\ \mu\text{H} = 24 \times 10^{-6}\ \text{H}$; $250\ \text{pF} = 250 \times 10^{-12}\ \text{F}$.

$$f = \frac{1}{6.28\sqrt{24 \times 10^{-6} \times 250 \times 10^{-12}}}$$
$$= \frac{1}{6.28\sqrt{6000 \times 10^{-18}}}$$
$$= \frac{1}{6.28 \times 77.5 \times 10^{-9}}$$

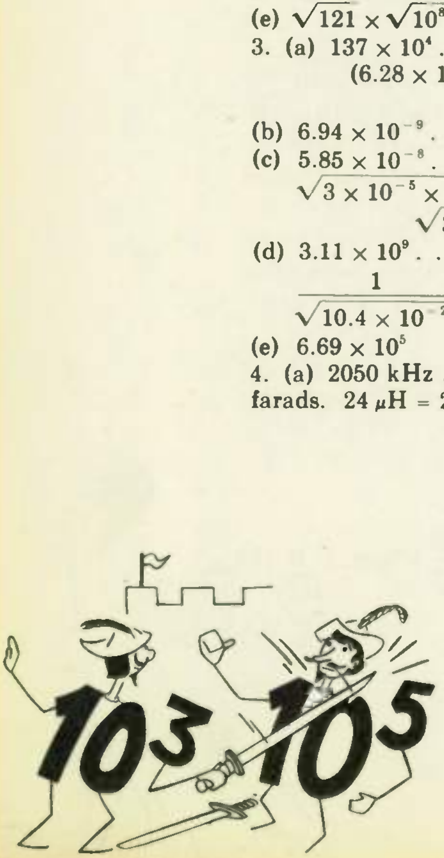

$$= \frac{10^9}{487} = \frac{1000 \times 10^6}{487} = 2.05 \times 10^6 \text{ Hz}$$

Now change hertz to kilohertz, 2.05×10^6 Hz $= 2.05 \times 10^6 \times 10^{-3}$ kHz $= 2.05 \times 10^3$ kHz.

(b) 367 kHz; (c) 559 kHz; (d) 297 kHz; (e) 2536 kHz

5. (a) 0.0042 μF . . . First change kilohertz to hertz and microhenrys to henrys. 100 kHz $= 100 \times 10^3 = 10^5$ Hz; 600 μH $= 600 \times 10^{-6}$ H $= 6 \times 10^2 \times 10^{-6} = 6 \times 10^{-4}$ H.

$$C = \frac{1}{(6.28 \times 10^5)^2 \times 6 \times 10^{-4}}$$

$$= \frac{1}{(6.28)^2 \times (10^5)^2 \times 6 \times 10^{-4}}$$

$$= \frac{1}{39.4 \times 10^{10} \times 6 \times 10^{-4}}$$

$$= \frac{1}{236 \times 10^6} = \frac{1000 \times 10^{-3} \times 10^{-6}}{236} = 4.24 \times 10^{-9} \text{ F}$$

Then change farads to microfarads:

$$4.24 \times 10^{-9} \text{ F} = 4.24 \times 10^{-9} \times 10^6 \,\mu\text{F} = 4.24 \times 10^{-3} = 0.0042 \,\mu\text{F}$$

(b) 0.0000015 μF; (c) 0.00812 μF

TEMPERATURE MEASUREMENTS

20 FAHRENHEIT AND CELSIUS SCALES . . . On the scale of the thermometer ordinarily used in the United States and other English-speaking countries, the freezing point of water is marked 32° and the boiling point of water is marked 212°. The portion of the scale between the freezing and boiling points is divided into equal spaces. This is called the Fahrenheit scale.

More convenient for most scientific purposes is the Celsius thermometer, on which the freezing point of water is marked 0° and the boiling point of water is marked 100°. The Celsius thermometer is widely used by scientists throughout the world, and you as an electronic technician may have frequent contact with it. The Celsius scale was formerly called the Centigrade scale, and this term is still often used.

You will frequently find it desirable to convert from the Celsius scale to the Fahrenheit scale, or vice versa. You can do so easily by using the following formulas:

$$C = \frac{5}{9}(F - 32) \qquad F = \frac{9}{5}C + 32$$

where C is degrees Celsius and F is degrees Fahrenheit.

When any formula has addition or subtraction within parentheses, work the part inside the parentheses first. Then work the rest of the problem.

Example . . . Change 68°F to degrees Celsius.

Solution . . . $C = \frac{5}{9}(68 - 32) = \frac{5}{9} \times 36 = \frac{5 \times \overset{4}{\cancel{36}}}{\cancel{9}}$

$= 20°\text{C}$, *ans.*

Example . . . Change 20°C to degrees Fahrenheit.

Solution . . . $F = \frac{9}{5} \times 20 + 32 = 36 + 32$

$= 68°\text{F}$, *ans.*

21 THE KELVIN SCALE . . . Another thermometer scale used occasionally is the Kelvin, or absolute, temperature scale. On this scale the lowest temperature that it is theoretically possible to obtain is taken as 0°. This temperature is reached at −273°C, and it is known as *absolute zero*.

To change any temperature from the Celsius scale to the Kelvin scale, add 273°. To change any temperature from the Kelvin scale to the Celsius scale, subtract 273°. For example, 50°C equals 50 + 273 = 323°K and 323°K equals 323 − 273 = 50°C.

WHAT HAVE YOU LEARNED?

1. Change 100°F to degrees Celsius.

2. Change 20°C to degrees Fahrenheit.

3. Change −10°C to degrees Fahrenheit.

4. Change 85°F to degrees Celsius.

5. Change −20°F to degrees Celsius.

6. On the nameplate of a motor or generator you will often find the inscription, "Temperature rise: 40°C." This means that, under continuous normal operation, the motor temperature will not rise more than 40°C above the temperature of the air surrounding the motor, called the *ambient temperature*. If a motor is operated in a room in

which the temperature is 72°F, what should be the maximum temperature of the motor, in degrees Fahrenheit, after the motor has been in operation for some time?

7. The crystal oven in a certain transmitter is operated at 60°C. What is the oven temperature in degrees Fahrenheit?

8. The oscillating frequency of a certain crystal changes 22 cycles for each degree Celsius change in temperature. If the minimum temperature that might be encountered is 40°F and the maximum is 120°F, how great a variation in oscillating frequency occurs?

9. Noise developed in an amplifier because of thermal agitation is proportional to the temperature in degrees Kelvin. If the temperature inside an amplifier is 130°F, what is the temperature in degrees Kelvin?

ANSWERS

1. 37.8°C 2. 68°F

3. 14°F . . . $F = \frac{9}{5}(-10) + 32 = 14°F$ 4. 29.4°C 5. −28.9°C

6. 144°F . . . 72°F = 22.2°C; 22.2°C + 40°C = 62.2°C; 62.2°C = 144°F. The formulas given in this lesson for converting between Celsius and Fahrenheit hold good only for *actual* temperatures. The 40°C given in this problem is not an existing temperature but the *difference* between the operating temperature of the machine and the room temperature. Since it is not an existing temperature, it cannot be converted to Fahrenheit by the lesson formulas. The problem must be worked by first converting 72°F (which is an actual temperature) to Celsius, as shown in the answer.

7. 140°F 8. 979 cycles . . . 40°F = 4.4°C; 120°F = 48.9°C; temperature change is 48.9 − 4.4 = 44.5°C; 44.5 × 22 = 979 cycles.

9. 327.4°K . . . 130°F = 54.4°C; 54.4 + 273 = 327.4°K

LESSON 2103-2

EASY WAYS OF FIGURING ELECTRONICS PROBLEMS

EXAMINATION

Circle the number of the correct answer for each question that follows. When you are finished, transfer the answers to the answer sheet by putting X's in the proper squares. When the graded answer sheet is returned to you, correct in this book any questions you may have missed. By doing so, you will have a record of the correct answers to all questions for review purposes.

$\frac{1}{10001} = 1/1.0000.$

1. To which of the following is 0.00000024 equal?
(1) 2.4×10^{6}
(2) 2.4×10^{7}
(3) 2.4×10^{8}
(4) 2.4×10^{-6}
[✓ (5) 2.4×10^{-7}]
(6) 2.4×10^{-8}
(7) None of the above

2. To which of the following is 10^{1} equal?
(1) 0
(2) 1
[✓ (3) 10]
(4) 11
(5) 100

3. To which of the following is 10^{0} equal?
(1) 0
(2) 0.1
[✓ (3) 1]
(4) 10

4. To which of the following is 10^{-1} equal?
(1) 0
(2) −1
[✓ (3) 0.1]
(4) −10
(5) 1
(6) 10

5. To which of the following is 10^{-2} equal?
[✓ (1) 0.01]
(2) 0.1
(3) 0.2
(4) 0.02
(5) 0
(6) −2
(7) None of the above

6. Which of the following is the square root of 10^{16}?
(1) 10^{-4}
(2) 10^{4}
[✓ (3) 10^{8}]
(4) None of the above

7. Which of the following is the reciprocal of 10^{-4}?
(1) $1/10^{4}$
(2) 0.0001
(3) 0.001
(4) 0.004
(5) 1000
(6) 4000
[✓ (7) 10,000]
(8) 10^{-2}

8. The easiest way to find the product of 0.000001003 × 13400000 is to first change the values to scientific notation. Which of the following does the problem then become? (*Make sure all parts of your selection are right.*)
(1) $1.003 \times 10^{-5} \times 1.34 \times 10^{7} = 134.402$
(2) $1.003 \times 10^{5} \times 1.34 \times 10^{-7} = 0.0134402$
(3) $1.003 \times 10^{-5} \times 1.34 \times 10^{5} = 13.4402$
(4) $1.003 \times 10^{-6} \times 1.34 \times 10^{5} = 0.134402$
[✓ (5) $1.003 \times 10^{6} \times 1.34 \times 10^{-7} = 1.34402$]
(6) $1.003 \times 10^{6} \times 1.34 \times 10^{-5} = 13.4402$
(7) $1.003 \times 10^{-9} \times 1.34 \times 10^{5} = 0.000134402$
[✓ (8) None of the above.]

?

9. Which of the following does $600{,}547 \times 10^{-3}$ equal?
(1) 60.0547
[✓ (2) 600.547]
(3) 6005.47
(4) 0.600547
(5) 600,547,000
(6) 0.000600547
(7) None of the above

$10^6 \times 12 \times 10^{-5}$

$\frac{120}{6 \times 10^{-5}}$

20×10^{5}

2,000,000

10. Evaluate the following, being sure to use scientific notation, but change your answer to ordinary notation.

$$\frac{10{,}000{,}000 \times 0.00012}{0.00006} = ?$$

[✓ (1)] 2,000,000 (2) 7,200,000 (3) 72,000,000 (4) 200,000,000
(5) None of the above

11. $\frac{10^4 \times 10^{-6} \times 10^3}{10^{-11} \times 10^{14}} = ?$

(1) 0.0001 [✓ (3)] 0.01 (5) 1 (7) 100
(2) 0.001 (4) 0.1 (6) 10 (8) 1000

12. Find the value of $\sqrt{3.6 \times 10^5}$.

(1) 60 (3) 600 (5) 3600
(2) 189.7 [✓ (4)] 1897 (6) 6000
[✓ (7)] None of the above

13. Find the value of $\sqrt{3.6 \times 10^7}$. (Select answer from choices for Question 12.) (6)

14. Find the value of $\sqrt{3.6 \times 10^{-7}}$.

(1) 0.001897 (3) 0.1897 (5) 0.06
(2) 0.01897 [✓ (4)] 0.006 (6) 0.6
(7) None of the above

15. $\frac{700 \times 1197 \times 10^{-7}}{7 \times 171 \times 10^{12} \times 10^{-15}} = ?$

(1) 0.007 (3) 0.7 (5) 70
[✓ (2)] 0.07 (4) 7 (6) 700
(7) None of the above

16. One foot is equal to how many meters?

(1) 0.298 [✓ (3)] 0.394 (5) 3.28
(2) 0.305 (4) 3.05 (6) 3.94
(7) None of the above

17. Change 0.073 millihenrys to henrys.

[✓ (1)] 0.000073 H (3) 0.0073 H (5) 0.73 H (7) 73 H
(2) 0.00073 H (4) 0.073 H (6) 7.3 H (8) 730 H

18. Change 100 kilovolts to millivolts.

(1) 0.1 mV (3) 100 mV (5) 100,000 mV [✓ (7)] 100,000,000 mV
(2) 10 mV (4) 1000 mV (6) 1,000,000 mV (8) None of the above

100 000 000

19. Change 450 millimeters to centimeters.

(1) 0.0045 cm
(2) 0.45 cm
(3) 4.5 cm
[✓ (4) 45 cm]
(5) 450 cm
(6) 4500 cm
(7) 45,000 cm
(8) 45,000,000 cm

20. Given the formula $\lambda = \frac{3 \times 10^8}{f}$, where f is the frequency in hertz and λ is the wavelength in meters, find the wavelength in *feet* if the frequency is 1850 kHz.

(1) 59.4 ft
(2) 162 ft
[✓ (3) 531 ft]
(4) 1620 ft
(5) 162,000 ft
(6) 531,000 ft

21. The formula for resonant frequency is $f = \frac{1}{2\pi\sqrt{LC}}$, where L is the inductance in henrys, C is the capacitance in farads, and f is the frequency in hertz. In a certain circuit the inductance is 0.024 mH and the capacitance is 3.2 μF. What is the resonant frequency in kilohertz? Be sure to use powers of 10 in working the problem.

[✓ (1) 18.2 kHz]
(2) 57.5 kHz
(3) 182 kHz
(4) 575 kHz
(5) 18,200 kHz
(6) 57,500 kHz
(7) None of the above

22. What is the lowest temperature theoretically obtainable?

(1) 32°C
(2) 0°C
(3) −212°C
[✓ (4) −273°C]

23. If the temperature as read by the Celsius thermometer is 0°, what will a Fahrenheit thermometer at the same location read?

(1) 0°
[✓ (2) 32°]
(3) −32°
(4) 17.8°
(5) None of the above

24. Change 77°C to degrees Fahrenheit.

(1) 25°F
(2) 45°F
[✓ (3) 170.6°F]
(4) 196.2°F
(5) None of the above

25. How many picofarads are there in 4 $\mu\mu$f?

(1) 0.25
[✓ (2) 4]
(3) 4000
(4) 4,000,000
(5) 4×10^{12}
(6) None of the above

END OF EXAM

TIPS FOR SUCCESS

Learn the meaning

A parrot can be taught to remember and repeat words, but only a limited number. You will learn as slowly as the parrot if you concentrate on memorizing as the parrot does, rather than on understanding. You must always *search for the meaning*. Then your learning and remembering will get into high gear.

In studying electronics, ask yourself such questions as Why does this happen? How does it work? Where does the current go? What is that capacitor for, and what would happen if it were removed?

When the subject material has *meaning for you*, it is easy to remember.

CLEVELAND INSTITUTE OF ELECTRONICS / CLEVELAND, OHIO

electronics

CLEVELAND INSTITUTE OF ELECTRONICS / CLEVELAND, OHIO

Resonant Circuits

2316-1

An AUTO-PROGRAMMED Lesson

ABOUT THE AUTHOR

Through nearly 20 years experience in helping students learn through home study, Mr. Geiger has obtained an intimate understanding of the problems facing home-study students. He has used this knowledge to make many improvements in our teaching methods. Mr. Geiger believes that students learn fastest when they actively participate in the lesson, rather than just reading it.

Mr. Geiger edits much of our new lesson material, polishing up the manuscripts we receive from subject-matter experts so that they are easily readable, contain only training useful to the student in practical work, and are written so as to teach, rather than merely presenting information.

Mr. Geiger's book, *Successful Preparation for FCC License Examinations* (published by Prentice-Hall), was chosen by the American Institute of Graphic Arts as one of the outstanding textbooks of the year.

This is an AUTO-PROGRAMMED Lesson exclusive with the Cleveland Institute of Electronics. It is your assurance of the finest in technical education and training.

**Registered Trademark*

Accredited by the Accrediting Commission
of the National Home Study Council

The Accrediting Commission has been approved by the U.S. Office of Education as a "nationally recognized accrediting agency".

CLEVELAND INSTITUTE OF ELECTRONICS

Resonant Circuits

By DARRELL L. GEIGER
Senior Project Director
Cleveland Institute of Electronics

2316-1

In this lesson you will learn...

Semi-automatic processing of nuclear fuel elements.
Photo: Courtesy, Sylvania-Corning Nuclear Corporation

FIRST EDITION/Second Printing/January, 1968.

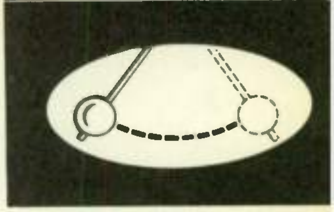

A chat with your instructor

When an inductor and a capacitor are used together, there will always be a certain frequency, called the resonant frequency, at which the inductive reactance and the capacitive reactance are equal.

Resonant circuits exhibit very important properties. A resonant circuit can be used to select one frequency or band of frequencies and, at the same time, reject others. Or it can be used to reject one frequency or band of frequencies and accept all others. A series resonant circuit has minimum impedance at resonance, and the impedance rises rapidly for frequencies removed from resonance. A parallel resonant circuit is exactly opposite: its impedance is maximum at resonance and decreases rapidly for frequencies removed from resonance.

These characteristics are extremely useful. They form the basis for selecting a desired frequency (tuning). Many resonant circuits are used in broadcast, communication, teletype, and television receivers. Resonant circuits are also used extensively in transmitters. In this lesson you will study the characteristics of resonance, as well as the characteristics of circuits containing resistance and inductance or resistance and capacitance. You will learn what the "flywheel effect" of a resonant circuit is and how it is useful for multiplying frequency. All of these ideas are essential to understanding how electronic circuits work, so study this lesson carefully.

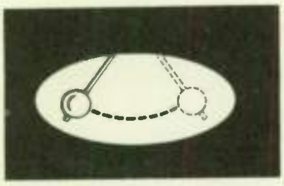

Resonant Circuits

SERIES RESONANT CIRCUITS

An inductor and a capacitor may, of course, be connected either in series or in parallel to the voltage source. No matter which way an *LC* circuit is connected, it has the interesting property that at or near some definite frequency—called the resonant frequency—its electrical properties are much different than at higher or lower frequencies. We will consider series resonant circuits first.

1 SERIES RESONANCE AND WHY IT OCCURS . . . If you vary the frequency of the 100-V generator E in Fig. 1 and watch the ammeter A, you will find that at a certain frequency the ammeter reads much higher than for either higher or lower frequencies. The frequency at which the current is greatest is called the *resonant* frequency of the series LC circuit, and if this is the generator frequency, the circuit is said to be at *resonance*.

Every circuit consisting of an inductor and a capacitor has a resonant frequency. Resistance is associated with any practical circuit; it is made up of the resistance of the coil winding, the connecting leads, and the capacitor plates. This unavoidable resistance is represented by R in Fig. 1. Thus every practical LC circuit must in fact be an LCR circuit, and the value of R, even though quite low, has an important effect on the characteristics of a resonant circuit. R can never be ignored in a circuit operating at resonance.

The reading of ammeter A in Fig. 1 is, of course, equal to E/Z, where Z is the circuit impedance at the generator frequency. To review your a-c circuit theory, to find Z you must first find X, the total reactance, which is equal to the difference between X_L and X_C. The reactance of L increases with the frequency and is given by the curve X_L in Fig. 2 for frequencies between 500 and 1600 kHz. The reactance of C decreases as the frequency increases and is given by curve X_C in Fig. 2. Before going further you should use the formulas $X_L = 2\pi fL$ and $X_C = \dfrac{1}{2\pi fC}$ to calculate X_L and

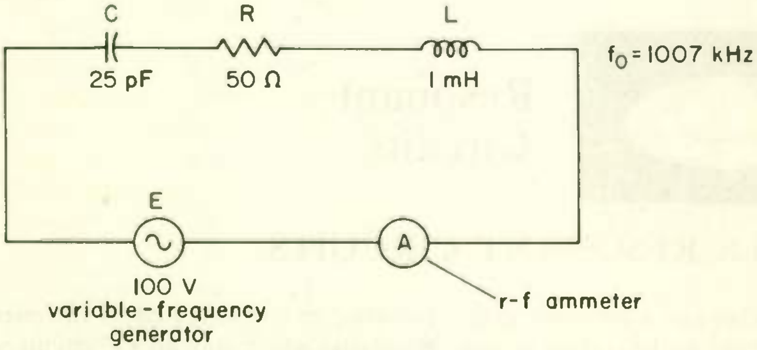

Fig. 1 A series *LC* circuit across a constant voltage.

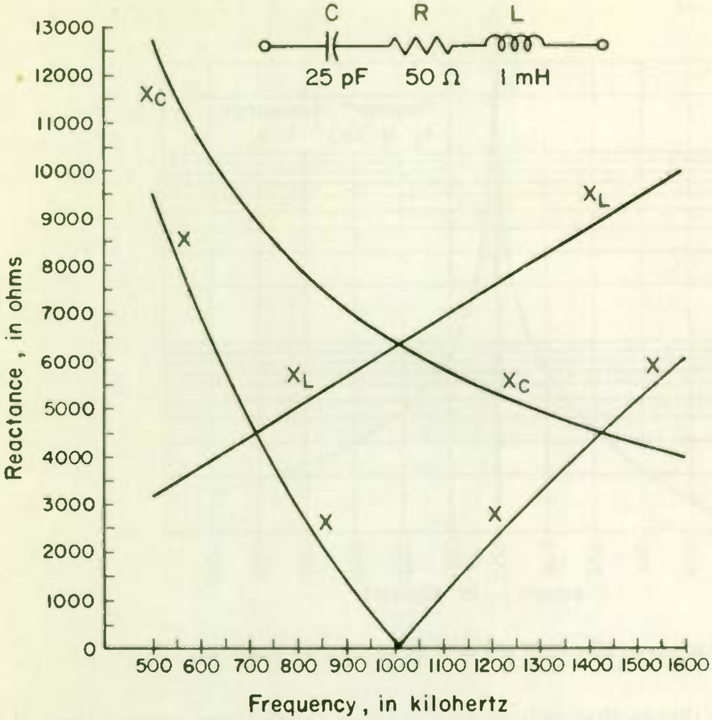

Fig. 2 Reactance of the *LC* circuit of Fig. 1 with variation of frequency.

X_C at two or three frequencies to see that the calculated results agree with the curves of Fig. 2.

The total circuit reactance is given by curve X in Fig. 2. This curve has been drawn by taking the difference between X_C and X_L at each frequency. For example, at 800 kHz X_L is 5030 Ω and X_C is 7960 Ω. Therefore X at this frequency is 7960 − 5030 = 2930 Ω, as shown by the curve X on the graph.

As shown in Fig. 2, at a frequency of 1007 kHz, X_L and X_C are equal in value and therefore X is zero. Therefore, 1007 kHz is the resonant frequency. At this frequency the only opposition to current flow in the circuit of Fig. 1 is the 50 Ω of R. Ammeter A therefore reads its highest, which is $I = \frac{100\ V}{50\ \Omega} = 2$ A, or 2000 mA. This current value at resonance is shown in Fig. 3.

The current at any frequency is given by $I = \frac{E}{Z}$. You will remember

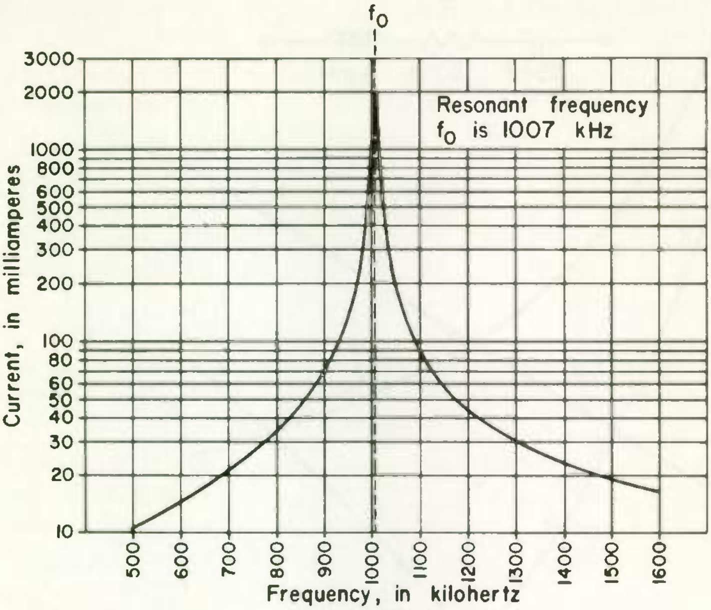

Fig. 3 Current in series *LC* circuit of Fig. 1 at various frequencies.

from your a-c theory that as long as X is 10 or more times greater than R, Z is equal to X for all practical purposes. So in Fig. 1, Z can be considered as equal to X for all values of X greater than 500 Ω. Therefore, in Fig. 2, Z can be considered as equal to X for all frequencies below 968 kHz and for all frequencies above 1048 kHz. Then in Fig. 3, you can check the current values as given by the curve for frequencies below 968 kHz and above 1048 kHz by using the approximate formula $I = \frac{E}{X}$, and you should do this for two or three different frequencies. For values between 968 and 1048 kHz, both R and X need to be considered for finding Z and thus the current. However, since the current at resonance is known, you have enough points without checking to draw the approximate current response curve shown in Fig. 3.

At this time let's consider how R affects the rise in current at resonance (called the sharpness of resonance). If R in Fig. 1 were only 25 Ω, the current at resonance would be 4000 mA. In Fig. 3, the current would shoot up to a peak at resonance that would be twice as high as the one shown. But the current for frequencies below 968 and above 1048 kHz would not change, since X has not changed. This gives the resonant curve steeper sides; that is, the resonant curve is sharper. Since a lower value of R means a higher Q, the higher the Q the sharper the resonant response.

1. Refer to Fig. 2. The value of X_L read from the graph at 600 kHz is (a) ________ ohms. At 850 kHz the value of X_L is (b) ________ ohms, and at 1450 kHz the value of X_L is (c) ________ ohms. The curve of X_L (d) *(is) (is not)* linear.

2. Refer to Fig. 2. The value of X_C read from the graph at 600 kHz is (a) ________ ohms. At 850 kHz the value of X_C is (b) ________ ohms, and at 1450 kHz the value of X_C is (c) ________ ohms.

3. Refer to Fig. 2. What are the values of X read from the graph at (a) 600 kHz, (b) 850 kHz, and (c) 1450 kHz?

4. By using the formula $X_L = 2\pi fL$, calculate the values of X_L at (a) 600 kHz, (b) 850 kHz, and (c) 1450 kHz. Compare your answers with the answers of Problem 1.

5. By using the formula $X_C = \dfrac{1}{2\pi fC}$, calculate the values of X_C at (a) 600 kHz, (b) 850 kHz, and (c) 1450 kHz. Compare your answers with the answers of Problem 2.

6. Calculate the values of X at (a) 600 kHz, (b) 850 kHz, and (c) 1450 kHz by using the results of Problems 4 and 5. Compare your answers with the answers of Problem 3.

7. The value of X_L, at the resonant frequency, is (a) *(equal to) (less than) (greater than)* the value of X_C. We know this because the value of X, at the resonant frequency, is (b) ________ .

8. At the resonant frequency shown in Fig. 3 the voltage E_C across C is (a) ________ volts and the voltage E_L across L is (b) ________ volts. This shows that in a series circuit at the resonant frequency, E_L and E_C are (c) *(equal to) (much greater than) (less than)* the applied voltage.

9. If R in Fig. 3 is doubled, the resonant frequency will (a) *(double) (remain the same) (halve)*. The impedance at resonance will (b) *(double) (remain the same) (halve)*, and the current through the circuit will (c) ________________ .

10. The resonant frequency is dependent upon two values: (a) ________________ and (b) ________________ .

11. Refer to Fig. 1. Find the value of E_C, E_L, and E_R at (a) 600 kHz, (b) 850 kHz, and (c) 1450 kHz.

12. Comparing the results of Problems 8 and 11, we can say that at frequencies above and below resonance, the values of E_C and E_L are (a) *(equal to) (less than) (greater than)* their values at resonance. The further from resonance the (b) *(lower) (greater)* the circuit impedance and the (c) *(lower) (greater)* the circuit current.

13. In a series resonant circuit, the current supplied by the source and the applied voltage *(are) (are not)* in phase.

14. At frequencies above resonance, the current supplied by the source *(leads) (lags)* the applied voltage.

15. At frequencies *(above) (below)* resonance the current leads the applied voltage.

16. The current in any LC circuit (a) *(lags) (leads)* the voltage E_L by (b) *(45) (90) (135)* degrees, but the circuit current (c) *(lags) (leads)* the voltage E_C by (d) ________ degrees.

ANSWERS

1. (a) 3800; (b) 5300; (c) 9100; (d) is
2. (a) 10,600 (b) 7500 (c) 4400 . . . Because of the difficulty in reading graphs your answer may not agree exactly with ours.
3. (a) 6800 Ω . . . $X = X_C - X_L = 10{,}600\ \Omega - 3800\ \Omega$ (b) 2200 Ω (c) 4700 Ω . . . Here X_L is greater than X_C; therefore, $X = X_L - X_C = 9100 - 4400$.
4. (a) 3.77 kΩ . . . $X_L = 2 \times 3.14 \times 600 \times 10^3 \times 1 \times 10^{-3}$ (b) 5.34 kΩ (c) 9.11 kΩ . . . Note that when your calculated answers are rounded off to two significant figures, they equal the corresponding values in Problem 1.
5. (a) 10.6 kΩ . . . $X_C = \dfrac{1}{6.28 \times 600 \times 10^3 \times 25 \times 10^{-12}}$

$$= \frac{1}{6.28 \times 6 \times 10^5 \times 2.5 \times 10^{-11}}$$

$$= \frac{10^6}{94.2} = \frac{1000 \times 10^3}{94.2} = 10.6\ \text{k}\Omega$$

(b) 7.49 kΩ; (c) 4.39 kΩ

6. (a) 6.83 kΩ . . . $X = X_C - X_L = 10.6\ \text{k}\Omega - 3.77\ \text{k}\Omega$ (b) 2.15 kΩ (c) 4.72 kΩ
7. (a) Equal to (b) Zero . . . See Fig. 2. $X = 0$ when $X_L = X_C$, and this occurs at the resonant frequency.
8. (a) 12.65 kV . . . $X_C = \dfrac{1}{6.28 \times 1007 \times 10^3 \times 25 \times 10^{-12}} = 6.325\ \text{k}\Omega$. You

must find the circuit current before you can find the voltage across C. We know from Problem 7 that at the resonant frequency reactance is zero. Therefore, the only opposition to current flow is the resistance of 50 Ω. Hence

$$I = \frac{E}{R} = \frac{100}{50} = 2\text{ A} \qquad E_C = IX_C = 2\text{ A} \times 6.325\text{ k}\Omega = 12.65\text{ kV}$$

(b) 12.65 kV . . . $X_L = 6.28 \times 1007 \times 10^3 \times 1 \times 10^{-3} = 6.324$ kΩ. $E_L = 2\text{ A} \times 6.324\text{ k}\Omega = 12.65$ kV.
(c) Much greater than.
9. (a) Remain the same (b) Double . . . At resonance the value of the impedance is the value of the resistance. (c) Halve
10. (a) Capacitance (b) Inductance . . . Either order is correct.
11. (a) $E_C = 155$ V, $E_L = 55.2$ V, $E_R = 0.732$ V . . . We must first find the circuit current. Answer 6(a) gives us the value $X = 6.83$ kΩ. $I = E/X = 100/6.83$ kΩ $= 14.64$ mA. Answer 5(a) gives us the value $X_C = 10.6$ kΩ. $E_C = IX_C = 14.64\text{ mA} \times 10.6\text{ k}\Omega = 155$ V. Answer 4(a) gives us the value of $X_L = 3.77$ kΩ. $E_L = IX_L = 14.64\text{ mA} \times 3.77\text{ k}\Omega = 55.2$ V. $E_R = IR = 14.64\text{ mA} \times 50 = 0.732$ V.
(b) $E_C = 348$ V; $E_L = 248$ V; $E_R = 2.33$ V
(c) $E_C = 93$ V; $E_L = 193$ V; $E_R = 1.06$ V
12. (a) Less than (b) Greater (c) Lower . . . Problem 11 shows that both E_C and E_L decrease the further you move from resonance. The impedance becomes the value of X once X is 10 times greater than R, and the further from resonance the larger X becomes.
13. Are . . . At resonance E_C and E_L effectively cancel each other, leaving R as the effective impedance. Current and voltage across a resistance are always in phase.
14. Lags . . . Above resonance the value of X_L predominates, thus the circuit becomes inductive and the current will lag the applied voltage.
15. Below . . . Below resonance the value of X_C predominates and the circuit becomes capacitive. As in any capacitive circuit, the current will lead the voltage.
16. (a) Lags (b) 90 (c) Leads (d) 90 . . . The current through any perfect inductor or capacitor will be 90° out of phase with the voltage across the inductor or capacitor.

2 FORMULA FOR FINDING THE RESONANT FREQUENCY . . . When the inductance and capacitance in a circuit are known, the resonant frequency (commonly designated f_0) can be found by the formula

$$f_0 = \frac{1}{2\pi\sqrt{LC}} \tag{1}$$

The derivation of this formula is not essential to your understanding of resonance. However, it is given here to satisfy your curiosity as to where the formula came from.

At resonance, inductive reactance equals capacitive reactance:

$$X_L = 2\pi fL = X_C = \frac{1}{2\pi fC}$$

Considering the second and fourth terms in the above equation, we have

$$2\pi f L = \frac{1}{2\pi f C}$$

By multiplying both sides by $2\pi f C$, we get

$$4\pi^2 f^2 LC = 1$$

Dividing both sides by $4\pi^2 LC$ yields

$$f^2 = \frac{1}{4\pi^2 LC}$$

And taking the square root of both sides gives us

$$f = \frac{1}{2\pi\sqrt{LC}}$$

Don't worry if you don't understand this derivation. The important thing you should know and memorize is formula (1) for finding the resonant frequency when L and C are known.

Example... Find f_0 for a series RLC circuit with $C = 100$ pF, $L = 4\ \mu$H, and $R = 25\ \Omega$.

Solution... For our purposes, the resistance may be neglected in solving for f_0:

$$f_0 = \frac{1}{2 \times \pi \times \sqrt{L \times C}}$$

$$= \frac{1}{2 \times 3.14 \times \sqrt{(100 \times 10^{-12})(4 \times 10^{-6})}}$$

$$= \frac{1}{6.28 \times \sqrt{(1 \times 10^{-10})(4 \times 10^{-6})}}$$

$$= \frac{1}{6.28 \times \sqrt{4 \times 10^{-16}}} = \frac{1}{6.28 \times 2 \times 10^{-8}}$$

$$= \frac{100 \times 10^6}{12.56} = 7.96 \text{ MHz, } \mathit{ans.}$$

WHAT HAVE YOU LEARNED?

1. The formula for the frequency at which resonance occurs is ________ .

2. The input circuit for a receiver is a series circuit with 10 μF capacitance and 20 μH inductance. The resonant frequency is (a) ______________ ________. If the series resistance equals 30 Ω, the circuit impedance at resonance equals (b) ________ ohms, and it is (c) *(inductive) (capacitive) (resistive)* in nature.

3. In a series resonant circuit, resonance occurs when ______________.

4. Find L when f_0 is 2.5 MHz and C is 10.2 μF.

5. Find C when f_0 is 1.3 MHz and L is 1.5 μH.

6. If $L = 100\ \mu\text{H}$, $R = 12\ \Omega$, and $X_L = X_C = 628\ \Omega$, what is the value of f_0?

7. If you use a 6-pF capacitor and a 50-mH coil in series across an a-c supply, the frequency at which the maximum circuit current would flow will be ________ megahertz.

ANSWERS

1. $f_0 = \dfrac{1}{2\pi\sqrt{LC}}$

2. (a) 11.3 kHz (b) 30 Ω (c) Resistive . . . Reactances cancel, leaving only resistance. 3. $X_L = X_C$

4. 398 pH . . . $L = \dfrac{1}{4\pi^2 f_0^2 C} = \dfrac{1}{4 \times 9.86 \times 6.25 \times 10^{12} \times 10.2 \times 10^{-6}}$

$$= \frac{1}{2510 \times 10^6} = \frac{1 \times 10^{-6}}{2510} = 398 \text{ pH}$$

5. 0.01 μF . . . $C = \dfrac{1}{4\pi^2 f_0^2 L} = \dfrac{1}{4 \times 9.86 \times 1.69 \times 10^{12} \times 1.5 \times 10^{-6}}$

6. 1 MHz . . . First we draw a circuit such as Fig. 4. Since $X_L = X_C$, we know the circuit is at resonance. Therefore the value of X_L is found by using the formula $X_L = 2\pi fL$ where $f = f_0$.

$$f_0 = f = \frac{X_L}{2\pi L} = \frac{628}{2 \times 3.14 \times 100 \times 10^{-6}} = 1 \text{ MHz}$$

7. 0.291 MHz . . . The maximum circuit current will flow when the circuit is operated at its resonant frequency.

$$f_0 = \frac{1}{2\pi \times \sqrt{LC}} = \frac{1}{6.28\sqrt{(50 \times 10^{-3})(6 \times 10^{-12})}}$$

$$= \frac{1}{6.28 \times 10^{-7}\sqrt{30}} = \frac{1}{6.28 \times 5.48 \times 10^{-7}} = 0.291 \times 10^6 = 0.291 \text{ MHz}$$

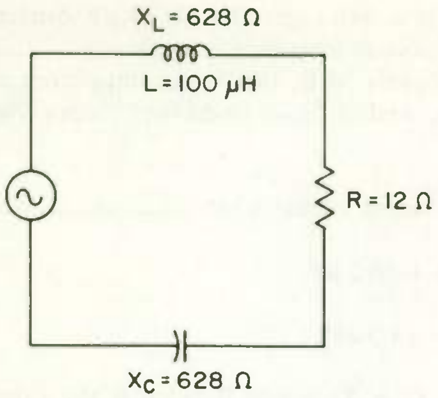

Fig. 4

3 HOW CHANGES IN *L* AND *C* AFFECT RESONANT FREQUENCY

QUENCY . . . The resonant frequency formula, $f_0 = \frac{1}{2\pi\sqrt{LC}}$, is one of the most important formulas in electronics. That being the case, it's worth our while to study its significance carefully. Notice first of all that, since 2π is always equal to 6.28, the only values in the formula that can change are L and C. Hence, the resonant frequency is determined entirely by the values of L and C.

Examining the formula further, we see that in calculating the resonant frequency we always multiply L by C as part of the operation. Hence, as long as the product of L multiplied by C (called the LC product) does not change, the resonant frequency will not change. For example, if L is made larger while at the same time C is made smaller so that $L \times C$ does not change, the resonant frequency won't change. *The resonant frequency of a circuit is determined by the LC product.*

The greater the LC product, the lower the resonant frequency. That is because LC is in the denominator of the formula fraction. The bigger you make the denominator of a fraction, the smaller the value of that fraction. For example, $\frac{1}{4}$ is smaller than $\frac{1}{2}$.

You might suppose that if you increased the LC product to four times its original value, the resonant frequency would be reduced to one-fourth of its previous value, but that is not true. The resonant frequency would be reduced to only one-half its original value. That is because of the square-root sign over the LC product in the formula ($\sqrt{LC}$). Because of this sign, the frequency of a resonant circuit varies inversely as the square root of the LC product.

WHAT HAVE YOU LEARNED?

1. Find the resonant frequency of an LCR circuit whose values are $L = 20\ \mu\text{H}$, $C = 8\ \mu\text{F}$, and $R = 5\ \Omega$.

2. What is f_0 when $C = 4\ \mu\text{F}$, $L = 40\ \mu\text{H}$, and $R = 10\ \Omega$?

3. The value of the LC product in Problem 1 is (a) __________, and the value of the LC product in Problem 2 is (b) __________. Thus, the LC product (c) *(did) (did not)* change.

4. The LC product of Problem 3 did not change because the value of C was (a) *(doubled) (halved)* and the value of L was (b) __________.

5. If L is decreased and C remains constant, the resonant frequency will *(increase) (decrease)*.

6. If L is increased 16 times and C is decreased to one-fourth its original value, the resonant frequency will (a) *(increase) (decrease)* by a factor of (b) *(2) (1/2) (1/4) (4)*.

7. If you want to triple the resonant frequency, you must change the LC product to *(9) (1/3) (3) (1/9)* times its previous value.

8. The larger the LC product the (a) *(higher) (lower)* f_0 will be, because the LC product is in the (b) __________ of the resonant frequency formula fraction.

9. The smaller the values of L and C the (a) *(higher) (lower)* the value of f_0. Thus at the lower r-f frequencies the values of L and C will be (b) *(greater than) (less than)* their values at the higher r-f frequencies.

10. The formula $f_0 = \dfrac{1}{2\pi\sqrt{LC}}$ shows that the value of f_0 varies (a) __________ as the (b) __________ of the LC product.

ANSWERS

1. f_0 = 12.6 kHz . . . $$f_0 = \frac{1}{2\pi\sqrt{LC}} = \frac{1}{2 \times 3.14 \times \sqrt{20 \times 10^{-6} \times 8 \times 10^{-6}}}$$
$$= \frac{1}{6.28 \times \sqrt{160 \times 10^{-12}}} = \frac{1}{6.28 \times 12.6 \times 10^{-6}}$$
$$= \frac{10^6}{79.1} = \frac{1000 \times 10^3}{79.1} = 12.6\ \text{kHz}$$

2. $f_0 = 12.6\,\text{kHz}$ 3. (a) 160×10^{-12}; (b) 160×10^{-12}; (c) did not

4. (a) Halved (b) Doubled . . . The value of C in Problem 2 is one-half the value of C in Problem 1, or $\frac{1}{2}C$. The value of L in Problem 2 is 2 times the value of L in Problem 1, or $2L$. The LC product is $\frac{1}{2}C \times 2L = \frac{C}{2} \times \frac{2L}{1} = LC$, which is the value in Problem 1.

5. Increase . . . If L decreases, the LC product decreases and the value of the denominator of the formula $f_0 = \frac{1}{2\pi\sqrt{LC}}$ decreases. Hence f_0 increases.

6. (a) Decrease (b) $\frac{1}{2}$ . . . The original value of f_0 is $f_0 = \frac{1}{2\pi \times \sqrt{LC}}$. Substituting the new values for L and C,

$$f_0 = \frac{1}{2\pi \times \sqrt{16L \times \frac{C}{4}}} = \frac{1}{2\pi \times \sqrt{4LC}} = \frac{1}{2\pi \times 2 \times \sqrt{LC}}$$

Comparing $\frac{1}{2\pi \times \sqrt{LC}}$ with $\frac{1}{2\pi \times 2 \times \sqrt{LC}}$, we can see that the new f_0 will be one-half the value of the original f_0.

7. $\frac{1}{9}$ . . . Since you want to triple the value of f_0, you must decrease the denominator of the resonant frequency fraction to one-third of its original value. The value of 2π is constant, and thus the value of $\sqrt{LC}$ must decrease to one-third of its original value. Because the square root of the LC product must decrease to one-third of its original value, the value of LC must be decreased to $\left(\frac{1}{3}\right)^2$, or $\frac{1}{9}$, times the original LC value. PROOF: $f_0 = \frac{1}{2\pi \times \sqrt{LC}}$, we decrease the LC product to $\frac{1}{9}$, so that $f_0 = \frac{1}{2\pi \times \sqrt{\frac{LC}{9}}} = \frac{1}{2\pi \times \frac{1}{3} \times \sqrt{LC}} = \frac{3}{2\pi \times \sqrt{LC}} = 3 \times \left(\frac{1}{2\pi\sqrt{LC}}\right)$. The new value of f_0 is 3 times greater than originally.

8. (a) Lower; (b) denominator 9. (a) Higher; (b) greater than

10. (a) Inversely; (b) square root

4

THE Q OF AN LC CIRCUIT . . . You have previously learned that the Q of a coil is equal to X_L/R, where R is the r-f resistance of the coil. The Q of an LC circuit at resonance is also defined as X_L/R, but in this case R includes all the resistance in the LC circuit, and not just the r-f resistance of the coil. Although the various leads and the capacitor plates themselves have resistance, nearly all of the resistance of an unloaded LC circuit is in the wire used to wind the coil. Hence, the Q of an unloaded LC circuit is just a little less than the Q of the coil alone.

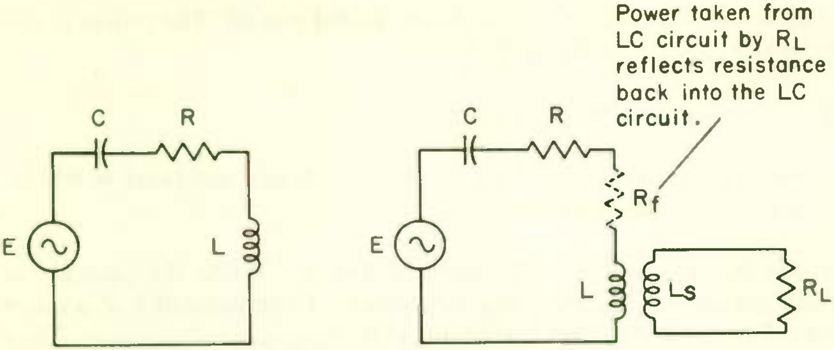

Power taken from LC circuit by R_L reflects resistance back into the LC circuit.

(a) Unloaded LC circuit

(b) Loaded LC circuit

Fig. 5 Difference between loaded and unloaded *LC* circuits.

Figure 5 shows the difference between a loaded and an unloaded *LC* circuit. Since capacitance and inductance do not use power, the only power used in the unloaded circuit of (a) is that dissipated as heat in R, which is determined by the formula $P = I^2R$. In Fig. 5(b) L is furnishing energy by transformer action to the coupled secondary coil L_s, the secondary power going to the load R_L. The power taken from the primary by the secondary load reflects an apparent resistance R_f back into the primary circuit. R_f is of such ohmic value that the power consumed by it, as given by $P = I^2R_f$, is equal to the power taken by R_L. However, the power taken by R_f is not dissipated in heat in the *LC* circuit as is the power taken by R; instead, it is dissipated by R_L.

The total resistance in the loaded *LC* circuit of Fig. 5(b) is $R + R_f$, and this total resistance is what determines the Q of the *LC* circuit. Since R_f is often many times the value of R, the Q of a loaded *LC* circuit tuned to resonance may be only a fraction of the Q of the same *LC* tuned circuit when unloaded.

WHAT HAVE YOU LEARNED?

1. At the resonant frequency X_L equals X_C; therefore if $Q = \dfrac{X_L}{R}$, we can also say that $Q =$ ________.

2. The power delivered by the supply source to the circuit of Fig. 1 when the circuit is at resonance is ________ watts.

3. The power of Problem 2 (a) *(is) (is not)* useful power. The power is dissipated as (b) ________ by the resistance.

4. Calculate the Q of the circuit in Fig. 1.

5. Assume the circuit of Fig. 1 is loaded by a reflected resistance of 950 Ω. The Q of the loaded circuit is ______ .

6. Compare the answers of Problems 4 and 5. When the circuit was loaded, the circuit Q (a) *(increased) (decreased)*. If the value of R in a series resonant circuit is doubled, the circuit Q is (b) ______________ . Thus the circuit Q varies (c) *(directly) (inversely)* as the circuit resistance.

7. Calculate the values of (a) E_L and E_C for Problem 5. Compare your answers with those of Problem 8, page 5. The values of E_L and E_C (b) *(increase) (decrease)* as the circuit is loaded. The greater the loading effect on the circuit, the (c) *(greater) (lower)* the value of circuit current. The lower the value of circuit current, the (d) ____________ the value of E_L and E_C.

8. Refer to Problem 7. The (a) *(greater) (lower)* the circuit Q the higher the voltages across the reactive components of a (b) ________ resonant circuit.

ANSWERS

1. $\frac{X_C}{R}$ . . . At resonance $Q = \frac{X_L}{R} = \frac{X_C}{R}$.

2. 200 . . . Circuit current at resonance is $\frac{100}{50} = 2$ A; $P = I^2R = (2\text{A})^2 \times 50\ \Omega = 200$ W.

3. (a) Is not (b) Heat . . . The heat dissipated by the resistor performs no useful function; therefore, it is wasted power.

4. 126.5 . . . $Q = \frac{X_L}{R}$. The answer to problem 8, page 6, gives us a value of $X_L = 6.324$ kΩ. $Q = \frac{6324}{50} = 126.5$.

5. 6.32 . . . $Q = \frac{X_L}{R} = \frac{6324}{950 + 50} = \frac{6324}{1000} = 6.32$.

6. (a) Decreased; (b) halved; (c) inversely.

7. (a) $E_L = 632$ V; $E_C = 632$ V . . . $E_L = IX_L$. The circuit current is $\frac{100\text{ V}}{1000} = 0.1$ A. $E_L = 0.1\text{ A} \times 6324 = 632$ V.
(b) Decrease; (c) lower; (d) lower.

8. (a) Greater (b) Series . . . The comparison made in Problem 7 shows that the higher the circuit Q, the higher the voltage across the reactive components. The reason for this is that high Q means low resistance and maximum circuit current at the resonant frequency.

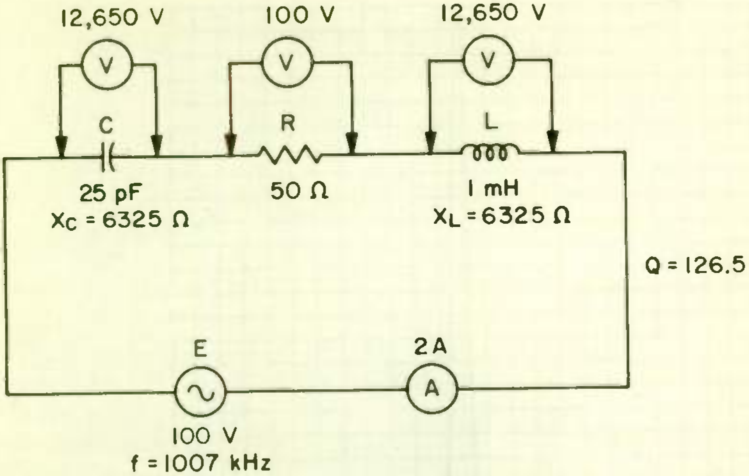

Fig. 6 Voltages and currents in the circuit of Fig. 1 at resonance.

5 CHARACTERISTICS OF A SERIES RESONANT CIRCUIT . . . The circuit of Fig. 1 is redrawn in Fig. 6 to show voltages and current when the circuit is at resonance. You have already computed these voltages as one of the problems on page 5. Note that the series circuit at resonance acts like a voltage step-up transformer, in this example raising the 100 V supply up to the dangerously high voltages of 12,650 V across *C* and *L*! In the majority of practical circuits using series resonance the supply voltage is only a fraction of a volt or so. The voltages across *C* and *L* are then quite modest values.

The voltage step-up at series resonance is equal to the *Q* of the circuit. That is, multiply the applied voltage *E* by the *Q* to get the voltage across *L* or *C* at resonance. You previously found the *Q* of the circuit of Fig. 6 to be 126.5. $E_C = E_L = Q \times E = 126.5 \times 100 = 12{,}650$ V. If you were to couple a load to *L* in Fig. 6 and thus drop the *Q* down, the voltages across *L* and *C* would be less.

The voltages across *L* and *C* are their highest at resonance and go down rapidly as the operating frequency departs from resonance (assuming that the applied voltage doesn't change). Remember that the voltage across X_C is equal to $I \times X_C$. Figure 3 shows how *I* is much less for frequencies off resonance than at the resonant frequency. Consequently the voltage across *C* is also much less, perhaps lower than the applied voltage *E*. The same comment, of course, applies to the voltage across *L*. Figure 7 shows how the voltage across *C* and *L* varies with frequency for the circuit of Fig. 1.

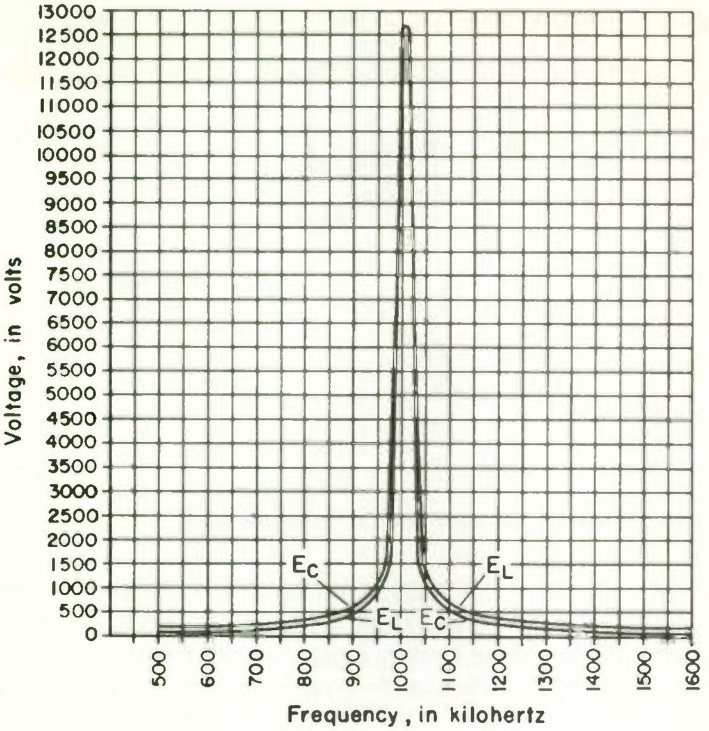

Fig. 7 Variation of voltage across *L* and C with frequency for the circuit of Fig. 1.

WHAT HAVE YOU LEARNED?

1. Refer to Fig. 7. The voltage across *C* (within the frequency range of the graph) is at its lowest value at (a)________ kilohertz. The minimum value of E_C is (b)________ volts. The voltage across *L* is at its lowest value at (c)________ kilohertz, and the minimum value of E_L is (d)________ volts.

2. Refer to Problem 1. The voltage across *C* at 1600 kHz is (a) *(higher) (lower)* than at 500 kHz. The voltage across *L* is (b) *(higher) (lower)* at 1600 kHz than at 500 kHz.

3. The voltage across *R* has its greatest value at the (a)________________ frequency, and E_R is (b)________ volts.

4. For frequencies other than resonance and not very near resonance, the voltage across *R* is *(greater than 100 V) (less than 100 V) (negligibly small).*

5. Calculate the values of E_L and E_C at (a) 1005 kHz and (b) 1010 kHz.

6. Calculate the values of E_L and E_C at (a) 500 kHz, (b) 950 kHz, (c) 1050 kHz, and (d) 1600 kHz.

7. Refer to Problems 5 and 6. For frequencies other than at or very near resonance, the difference between E_C and E_L *(does) (does not)* equal the applied voltage.

8. The phase angle between circuit current and applied voltage is the angle formed by the resultant voltage phasor and the *(resistance) (reactance)* voltage phasor.

9. The phase angle between the applied voltage and the circuit current at resonance is *(0) (45) (90)* degrees.

10. The phase angle between the applied voltage and the circuit current, at frequencies below resonance and the point where X is 10 times greater than R, is approximately (a) *(0) (45) (90)* degrees. The current (b) *(leads) (lags)* the applied voltage.

11. The phase angle between applied voltage and circuit current, at frequencies above resonance and the point where X is 10 times greater than R, is approximately (a) ______ degrees. The current (b) *(leads) (lags)* the applied voltage.

12. The current in a series circuit above resonance is (a) *(inductive) (capacitive) (resistive)*. Below resonance the current is (b) *(capacitive) (inductive) (resistive)*, and at the resonant frequency the current is (c) ______________ .

ANSWERS

1. (a) 1600 (b) 66 (c) 500 (d) 33 . . . Voltage values we give have been calculated. You can not read these values to this accuracy from Fig. 7.
2. (a) Lower (b) Higher . . . Note that, at the minimum frequency shown, the value of E_C is larger than at the maximum frequency, but E_L varies in just the opposite way. Thus E_C predominates below resonance and E_L predominates above resonance.
3. (a) Resonant (b) 100 V . . . Refer to Problem 2, page 13. The current at resonance is 2 A; $E_R = 2\text{ A} \times 50\ \Omega = 100\text{ V}$.
4. Negligibly small . . . Refer to Problem 11, page 6. The value of E_R is negligible. At 850 kHz E_R is approximately 2 per cent of the applied voltage.
5. (a) $E_L = 11.17$ kV; $E_C = 11.22$ KV . . . $X_L = 2\pi f L = 6.28 \times 1005 \times 10^3 \times 1 \times 10^{-3} = 6311\ \Omega$.

$$X_C = \frac{1}{2\pi f C} = \frac{1}{6.28 \times 1005 \times 10^3 \times 25 \times 10^{-12}} = \frac{10^6}{157.8} = 6337\ \Omega$$

$X = X_C - X_L = 6337 - 6311 = 26\ \Omega$. Since X is not 10 times greater than R, we must consider R in finding the circuit current. The impedance of the series circuit is $Z = \sqrt{R^2 + X^2} = \sqrt{50^2 + 26^2} = \sqrt{2500 + 676} = \sqrt{3176} = 56.4\ \Omega$.

$$I = \frac{E}{Z} = \frac{100\text{ V}}{56.4\ \Omega} = 1.77\text{ A}$$

$E_L = IX_L = 1.77\text{ A} \times 6311\ \Omega = 11.17\text{ kV}$ $\quad E_C = IX_C = 1.77\text{ A} \times 6337\ \Omega = 11.22\text{ kV}$
(b) $E_L = 10.1\text{ kV}$; $E_C = 10.04\text{ kV}$
6. (a) $E_L = 32.7\text{ V}$; $E_C = 132.7\text{ V}$ . . .

$$X_L = 6.28 \times 500 \times 10^3 \times 1 \times 10^{-3} = 3140\ \Omega$$

$$X_C = \frac{1}{6.28 \times 500 \times 10^3 \times 25 \times 10^{-12}} = \frac{10^6}{78.5} = 12{,}740\ \Omega$$

$$X = X_C - X_L = 12{,}740\ \Omega - 3140\ \Omega = 9600\ \Omega$$

Because X is more than 10 times greater than R, we ignore R when calculating the circuit current. Thus for all practical purposes, $X = Z$, the circuit impedance.

$$I = \frac{E}{Z} = \frac{100}{9600} = 0.01042\text{ A}$$

$E_L = IX_L = 0.01042\text{ A} \times 3140\ \Omega = 32.7\text{ V}$
$E_C = IX_C = 0.01042\text{A} \times 12{,}740\ \Omega = 132.7\text{ V}$
(b) $E_L = 814\text{ V}$; $E_C = 914\text{ V}$ $\quad$ (c) $E_L = 1238\text{ V}$; $E_C = 1138\text{ V}$
(d) $E_L = 165.6\text{ V}$; $E_C = 65.6\text{ V}$

7. Does . . . The difference between E_L and E_C in Problem 6 is 100 V in each case. Thus at frequencies not close to the resonant frequency the difference between E_L and E_C is the applied voltage. On the other hand, Problem 5 shows that near resonance the above statement is not true.

8. Resistance . . . You learned this in Lesson 2315.

9. 0 . . . At the resonant frequency X_L and X_C cancel each other. Thus the circuit impedance at resonance is the value of R. There is no phase shift.

10. (a) 90 $\quad$ (b) Leads . . . When X is at least 10 times greater than R, the value of the resistance can be ignored in figuring circuit current. Thus the phase angle between applied voltage and circuit current is determined by the type of reactance that predominates in the circuit. Below the resonant frequency the capacitive reactance predominates, thus the circuit current will lead the applied voltage by approximately 90°.

11. (a) 90 $\quad$ (b) Lags . . . Above the resonant frequency the inductive reactance predominates; hence the current will lag the applied voltage.

12. (a) Inductive; (b) capacitive; (c) resistive

6

SOME EXAMPLES OF SERIES RESONANT CIRCUITS IN USE . . . As our first example we will show how the LC circuit in Fig. 8(a) selects the signal that is desired from the many signals at different frequencies picked up by the antenna and boosts the voltage of that signal up to a much higher value at the grid of tube V.

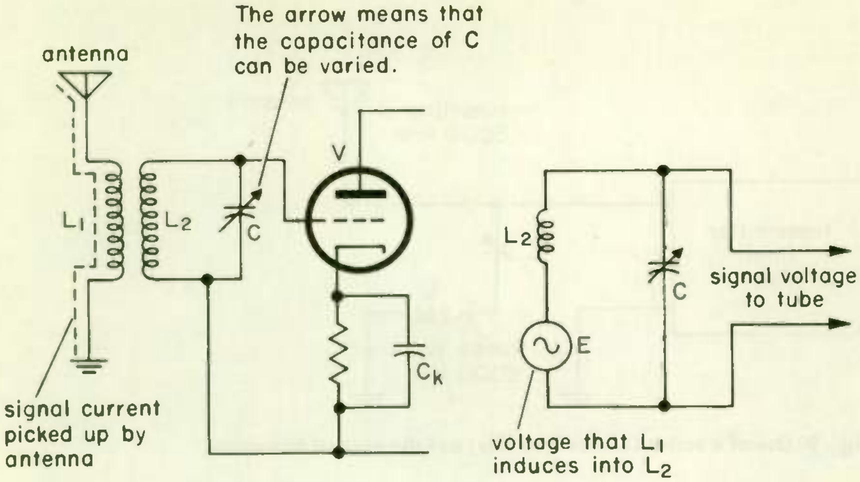

(a) Circuit (b) Equivalent circuit

Fig. 8 A practical tuned circuit and its equivalent circuit.

Suppose that we want to receive a 2-MHz signal being picked up by the antenna. Capacitor C is varied until its value is such that, with L_2, the circuit is resonant at 2 MHz. We generally describe this process as tuning L_2C to 2 MHz. The signal picked up by the antenna causes a tiny current to flow in L_1, which induces a tiny voltage into L_2. This induced signal voltage in L_2 is represented by E in the equivalent circuit of (b). Notice that L_2 and C are in series with the induced signal E, so that we have a series LC tuned circuit.

Since L_2C is resonant at the frequency of E, the signal voltage across C is equal to E multiplied by Q. If Q is 100, which is typical, the signal voltage across C applied to the grid of the tube is 100 times greater than E. Hence, although E may be very weak, the grid gets a much stronger signal to be further amplified by the tube.

Now the antenna, of course, also picks up many other signals at other frequencies, which likewise induce voltages into L_2. But since their frequencies are not the resonant frequency to which L_2C is tuned, their amplitude is not boosted up by the tuned circuit. The signals of these unwanted frequencies are so weak on the grid of V that they are generally not noticed in the output of the equipment.

Since a series LC circuit has a very low impedance at resonance and a high impedance at frequencies not close to resonance, it can be used to get rid

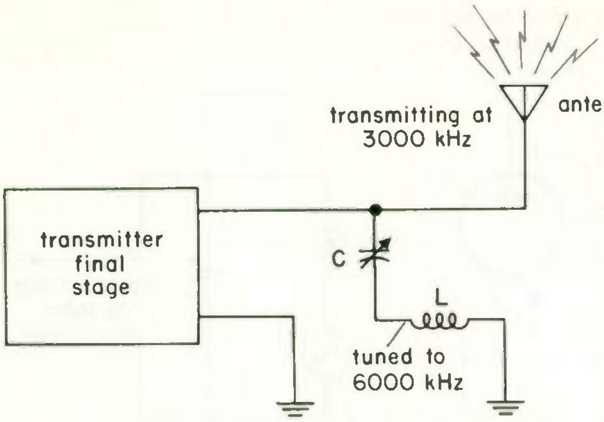

Fig. 9 Use of a series *LC* circuit to filter out the second harmonic.

of an unwanted frequency. Figure 9 shows an example of a series *LC* circuit so used. Transmitters often have sufficient distortion that the harmonics generated would cause interference if allowed to reach the antenna.

The transmitter in Fig. 9 is transmitting at 3000 kHz. But because of distortion, the final stage will also produce some output at the second harmonic, which is 6000 kHz. Capacitor *C* is tuned to resonate the *LC* circuit at 6000 kHz. Because of the very low impedance of *LC* at this frequency, the second-harmonic output from the final stage shorts to ground through *LC* and so does not reach the antenna. Since the impedance of *LC* is high at 3000 kHz, the *LC* circuit has negligible effect on the desired frequency of transmission.

WHAT HAVE YOU LEARNED?

1. Refer to Fig. 8. If you want to receive a signal at a higher frequency than the frequency to which L_2C is tuned, you adjust C to a *(higher) (lower)* value of capacitance.

2. Refer to Fig. 8. Instead of using a variable capacitor you could use a variable (a) _____________ because it does not matter which component is varied to change the (b) _____________ frequency of L_2C.

3. Refer to Fig. 9. The transmitter is transmitting at 1250 kHz and you want to short to ground any second harmonics. You have a variable

500-pF to 0.0045 μF capacitor, but you need an inductor. You would buy an inductor of ______ millihenrys. (HINT: Use the average value of C).

4. Refer to Fig. 8. The signal voltage applied to the tube (a) *(is) (is not)* equal to the induced voltage. The voltage applied to the tube is (b) ______ times the induced voltage. At frequencies above and below the point where X is 10 times greater than R, the voltage applied to the tube (c) *(is) (is not)* equal to the induced voltage.

5. Refer to Fig. 9. A series LC circuit can be used to short to ground an undesired frequency because, when tuned to the undesired frequency, the series LC circuit has very (a) *(low) (high)* impedance to that frequency and a (b) *(low) (high)* impedance to frequencies above and below that frequency.

ANSWERS

1. Lower . . . The formula $f_0 = \dfrac{1}{2\pi\sqrt{LC}}$ shows that to increase f_0 the LC product must be decreased. Therefore, the capacitance of C must be decreased.

2. (a) Inductor (b) Resonant . . . Most automobile radios use a variable inductor rather than a variable capacitor.

3. 0.00162 . . . $f_0 = \dfrac{1}{2\pi\sqrt{LC}}$. To solve for L we use the formula $L = \dfrac{1}{4\pi^2 f_0^2 C}$.

The value of C should be the average value of the variable capacitor, 2500 pF. Thus C can be varied 2000 pF above and below 2500 pF to obtain the widest possible range of resonant frequencies.

$$L = \frac{1}{4 \times 3.14^2 \times (2.5 \times 10^6)^2 \times 2500 \times 10^{-12}}$$

$$= \frac{1}{4 \times 9.86 \times 6.25 \times 10^{12} \times 2.5 \times 10^{-9}} = \frac{1 \times 10^{-3}}{616.3} = 0.00162 \text{ mH}$$

4. (a) Is not; (b) Q; (c) is 5. (a) Low; (b) high

PARALLEL RESONANT CIRCUITS

Whether the inductor and the capacitor are connected in series or parallel, the resonant frequency of an LC circuit is found by the same formula $f_0 = \dfrac{1}{2\pi\sqrt{LC}}$. Other than this, the properties of parallel LC circuits are strikingly opposite those of series LC circuits.

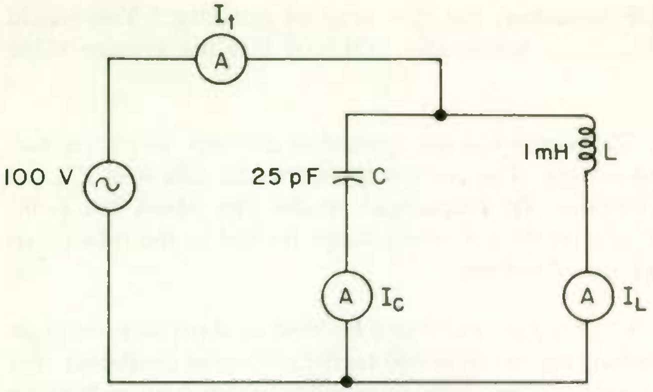

Fig. 10 An ideal parallel *LC* circuit with r-f ammeters to measure branch and total currents.

7 CURRENTS IN AN IDEAL PARALLEL RESONANT CIRCUIT...

Figure 10 uses the same values of L and C and the same voltage as in the series circuit of Fig. 1, but now L and C are connected in parallel. No circuit resistance R is shown, because we will at this time consider an ideal circuit in which there is no resistance. Later we will consider the practical circuit, which must always have resistance.

Curve I_L in Fig. 11 shows the current through L at different frequencies, and I_C shows the current through C. You learned in the preceding lesson how to calculate these currents, and you should at this time make several calculations to see that your results agree with the curves of Fig. 11.

Since the current through L is 180° out of phase with the current through C, the total or line current I_t, also shown in Fig. 11, is the arithmetic difference between I_L and I_C. In any parallel LC circuit, the current through C increases with increased frequency, whereas the current through L goes down. That being the case, there must always be a frequency at which $I_L = I_C$, and that frequency is called the resonant frequency. In Fig. 11 the resonant frequency occurs at 1007 kHz, where the I_L and I_C curves cross.

At the resonant frequency in Fig. 11 I_C and I_L are each 15.8 mA and the current I_t supplied by the 100-V source is 15.8 mA − 15.8 mA = 0 mA. Thus an ideal (no resistance) parallel LC circuit would draw no current at all from the supply voltage at the resonant frequency, although current would flow in L and C! While the line current to a practical parallel LC circuit won't be zero at resonance, it will be very small, as you will see later.

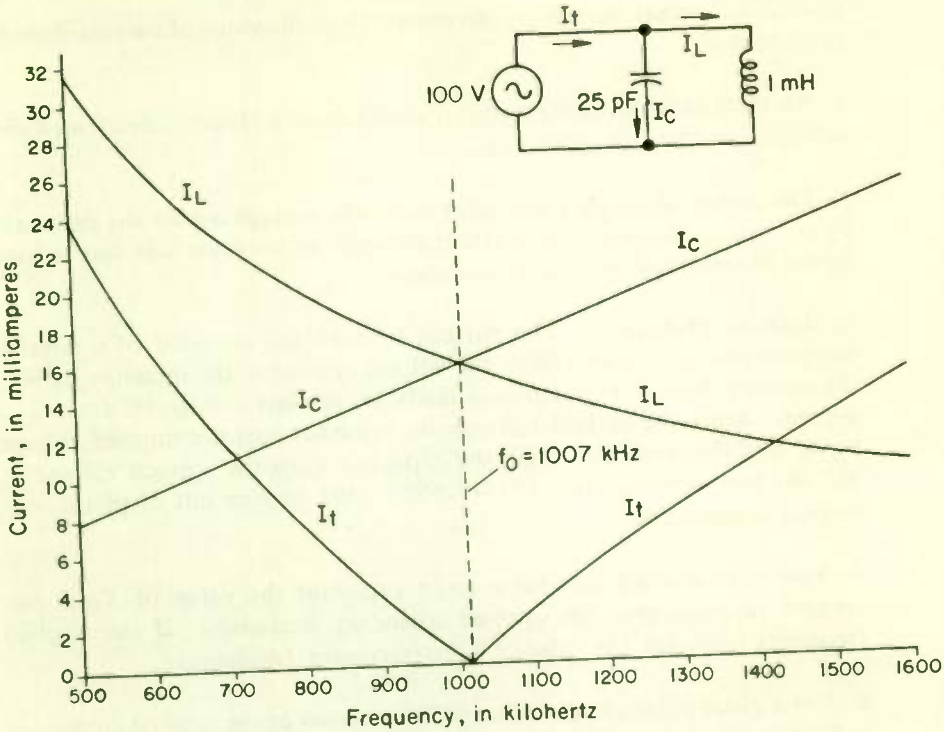

Fig. 11 Variation of current with frequency in a lossless LC circuit.

Since the frequency at which $I_C = I_L$ (the parallel resonant frequency) occurs at the frequency at which $X_L = X_C$, the frequency at which parallel resonance occurs is the same as the frequency at which series resonance would occur with the same L and C values. Hence, the formula for finding parallel resonance is the same as the formula for finding series resonance.

WHAT HAVE YOU LEARNED?

1. Refer to Figs. 3 and 11. At resonance, the current flowing through a LC series circuit is (a) *(maximum) (minimun)*. The line current flowing to a parallel LC circuit at resonance is (b) *(maximum) (minimum)*.

2. At frequencies on either side of resonance, the current flowing through a series LC circuit *(increases) (decreases)* from the value of current flowing at resonance.

3. At frequencies on either side of resonance the line current flowing to a

parallel LC circuit *(increases) (decreases)* from the value of current flowing at resonance.

4. An ideal parallel resonant circuit would draw a *(heavy) (zero) (medium)* current from the voltage source.

5. The current through a capacitor leads the voltage across the capacitor by (a) ______ degrees. The current through an inductor lags the voltage across the inductor by (b) ______ degrees.

6. Refer to Problem 5. The current through the inductor of a parallel resonant circuit (a) *(leads) (lags)* the voltage applied to the inductor by 90°; the current through the capacitor leads the applied voltage by (b) ______ degrees. Since the current through the inductor lags the applied voltage by 90° and the current through the capacitor leads the applied voltage by 90°, the two currents are (c) *(0) (45) (90) (180)* degrees out of phase with respect to each other.

7. You have learned that for a given capacitor the value of X_C (a) *(increases) (decreases)* as the applied frequency decreases. If the applied frequency increases, the value of X_C (b) *(increases) (decreases)*.

8. For a given inductor, the value of X_L increases as the applied frequency (a) *(increases) (decreases)* and X_L will decrease as the frequency (b) ____________ .

9. Assuming a constant a-c voltage is applied, the current through a capacitor (a) *(increases) (decreases)* as X_C increases. The current through an inductor decreases as X_L (b) ____________ .

10. Refer to Problem 9. At frequencies well above resonance the current through the inductor of a parallel LC circuit will be much *(greater) (less)* than the current through the capacitor.

11. The line current to an ideal parallel LC circuit is the difference between I_C and I_L; therefore, at frequencies well above resonance, the line current (a) *(leads) (lags)* the applied voltage by (b) ______ degrees.

12. At frequencies well below the resonant frequency of an ideal parallel LC circuit, the line current (a) *(leads) (lags)* the applied voltage by (b) ______ degrees.

13. At frequencies above resonance, a series circuit is (a) *(inductive) (capacitive)* and a parallel circuit is (b) *(inductive) (capacitive)*.

ANSWERS

1. (a) Maximum; (b) minimum 2. Decreases 3. Increases
4. Zero . . . An ideal parallel *LC* circuit would have no r-f resistance. Figure 11 shows the line current to an ideal parallel resonant circuit is zero.
5. (a) 90 (b) 90 . . . Do not confuse I_L and I_C with I_t.
6. (a) Lags (b) 90 (c) 180 . . . You will learn more about this in Topic 8.
7. (a) Increases (b) Decreases . . . Remember, the capacitive reactance is inversely proportional to the applied frequency.
8. (a) Increases (b) Decreases . . . Inductive reactance is directly proportional to the applied frequency.
9. (a) Decreases . . . $I = \frac{E}{X_C}$. When X_C increases, with E constant, I must decrease. (b) Increases
10. Less . . . At frequencies above resonance the value of X_L will increase, hence I_L will decrease.
11. (a) Leads (b) 90 . . . Figure 11 shows that at frequencies well above resonance the value of I_t is determined by the value of I_C. The line current leads the applied voltage by 90°.
12. (a) Lags (b) 90 . . . The line current I_t will be equal to $I_L - I_C$ and will be in phase with the current through the inductor.
13. (a) Inductive (b) Capacitive . . . Refer to Problem 11.

8 CURRENTS IN A PRACTICAL PARALLEL *LC* CIRCUIT . . . Figure 12(a) differs from Fig. 10 in that the circuit resistance *R* of Fig. 1 is now included. Since *R* is made up mostly of the coil resistance, it is shown in series with *L* in Fig. 12(a). Since *R* is in the inductive branch of the circuit, it obviously has no effect on curve I_C in Fig. 11, and its effect on

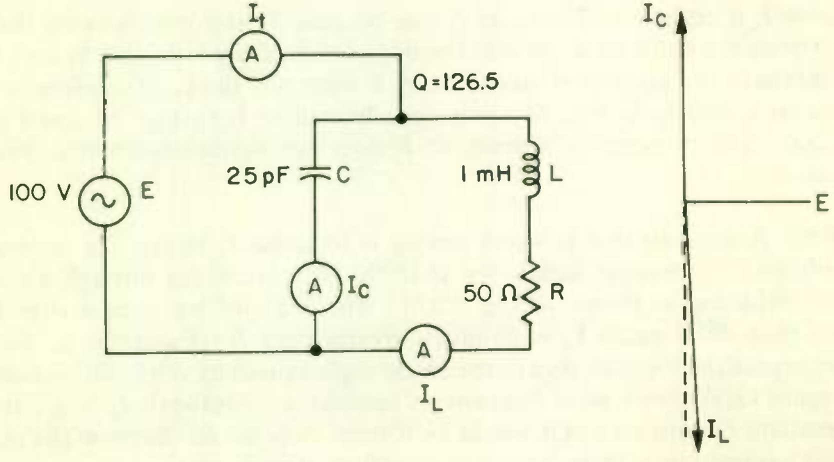

(a) (b)

Fig. 12 A practical parallel *LC* circuit with phasor diagram.

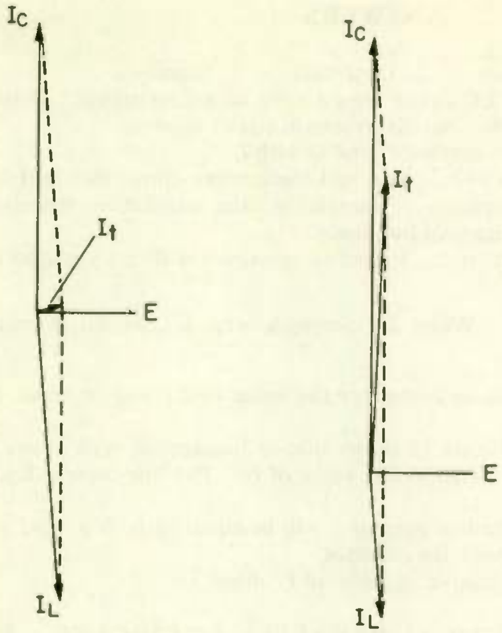

(a) At resonance (b) Not at resonance

Fig. 13 Finding total current in a parallel LC circuit.

curve I_L is negligible. The latter is true because X_L is normally more than 10 times the value of R, so that the impedance of the inductive branch is essentially the same as it would be if R were not there. Therefore, the curves I_L and I_C in Fig. 11 apply equally well to both Fig. 10 and Fig. 12(a). The presence or absence of R does not noticeably change these curves.

What R does do that is worth noting is to cause I_L to lag the applied voltage E by an angle slightly less than the 90° current lag through a perfect inductor, as shown in Fig. 12(b). The angle of lag is only slightly less than 90° because X_L is so much greater than R. Except at or near resonance the slight change of the phase angle caused by R has little effect. Figure 13(a) shows what happens at resonance. Although $I_L = I_C$, the resultant I_t is not zero as it would be if there were no R. Because the circuit has resistance, there is some current flow at resonance.

For frequencies not near resonance, R has little effect on the value of I_t. Figure 13(b) shows why. The resultant I_t is approximately equal to I_C −

I_L, as it would be if there were no R. Thus the curve I_t in Fig. 11 correctly represents the total circuit current for Fig. 12(a) except at or near resonance.

The total current I_t is so small at resonance compared with I_L and I_C that it is not practical to measure its value from a phasor diagram. However, from power considerations we can calculate I_t in Fig. 12(a). Since inductance and capacitance do not consume power, all the power $E \times I_t$ taken from the 100-V supply is used by R. The formula $P = I_L{}^2R = 0.0158^2 \times 50 = 0.0125$ W. This is the power that the 100-V source must supply. That is, $E \times I_t = 0.0125$ W, so that $I_t = 0.0125/100 = 0.000125$ A $= 125$ μA, the line current at resonance. This current is so small that we can't show it in Fig. 11. Nevertheless, the total current is not zero in a practical LC circuit, and although very small, its value is important.

You can't use the method of the preceding paragraph to find I_t except at the resonant frequency. That is because $E \times I_t$ gives P only when I_t and E are in phase, and that is only at or very near resonance. Figure 13(a) shows that at resonance I_t and E are not exactly in phase, but the phase angle is so small that it can be neglected in calculating P.

It is interesting to note that I_t at resonance is equal to I_L divided by Q. $I_t = \dfrac{0.0158}{126.5} = 125 \times 10^{-6}$ A $= 125$ μA. In a series resonant circuit the voltage across L (or C) is equal to the source voltage multiplied by Q. In a parallel resonant circuit the current through L (or C) is equal to the source current multiplied by Q.

WHAT HAVE YOU LEARNED?

1. An ideal parallel LC circuit draws no line current at the resonant frequency, but a practical circuit has some r-f (a) ________________ and therefore a practical circuit draws line (b) ______________ .

2. Refer to Figs. 12(b) and 13(a). An increase in r-f resistance means the parallel resonant LC circuit will draw *(more) (less)* line current.

3. Refer to Fig. 13(a). At resonance, the line current and applied voltage are nearly (a) *(in) (out of)* phase. The angle between them is of such value that for practical considerations we usually (b) *(can) (cannot)* ignore it.

4. Refer to Fig. 13(a) and (b). The phase angle between I_t and E for a

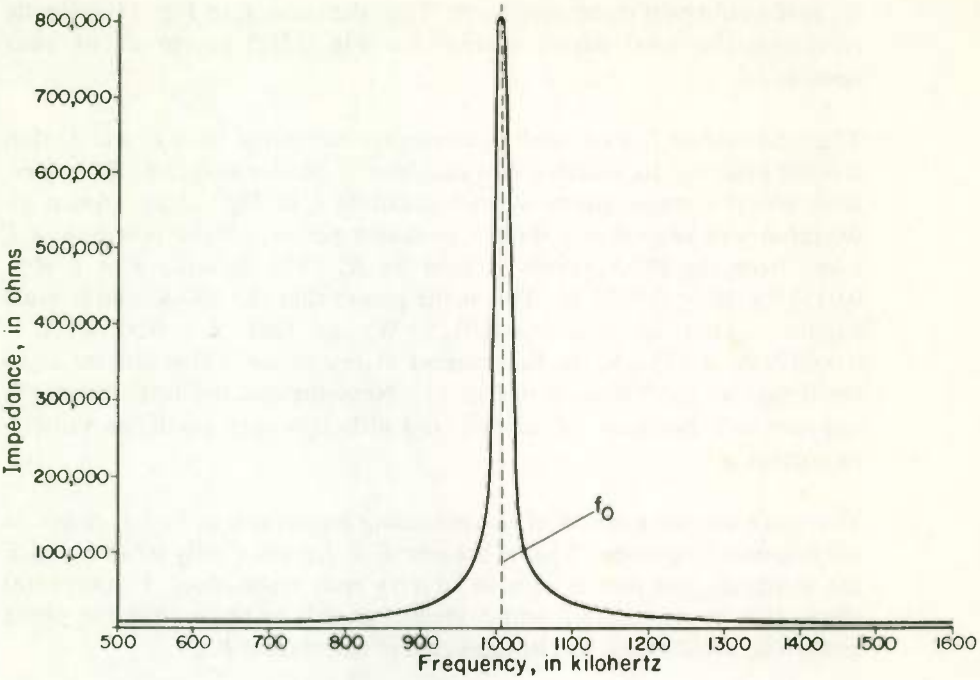

Fig. 14 Impedance of a parallel resonant circuit.

practical *LC* parallel circuit varies from nearly (a)_______ degrees at resonance to approximately (b)_______ degrees at frequencies well removed from resonance.

5. Since the line current flow to a parallel resonant circuit is (a) *(maximum) (minimum)* at resonance, it follows that at the resonant frequency the impedance of a parallel resonant circuit is (b) *(maximum) (minimum)*.

ANSWERS

1. (a) Resistance; (b) current 2. More . . . Figure 12(b) shows that an increase in *R* will decrease the angle between I_C and I_L. Figure 13(a) shows that if the angle between I_C and I_L is decreased, the length of phasor I_t will increase.
3. (a) In; (b) can 4. (a) Zero; (b) 90
5. (a) Minimum (b) Maximum . . . Ohm's law for a-c circuits is $Z = E/I$. When I is minimum, with E constant, Z must be at its maximum value.

9 IMPEDANCE OF A PARALLEL *LC* CIRCUIT . . . We have found that I_t in Fig. 12 is 125 μA at resonance. From this we find the circuit impedance at resonance to be

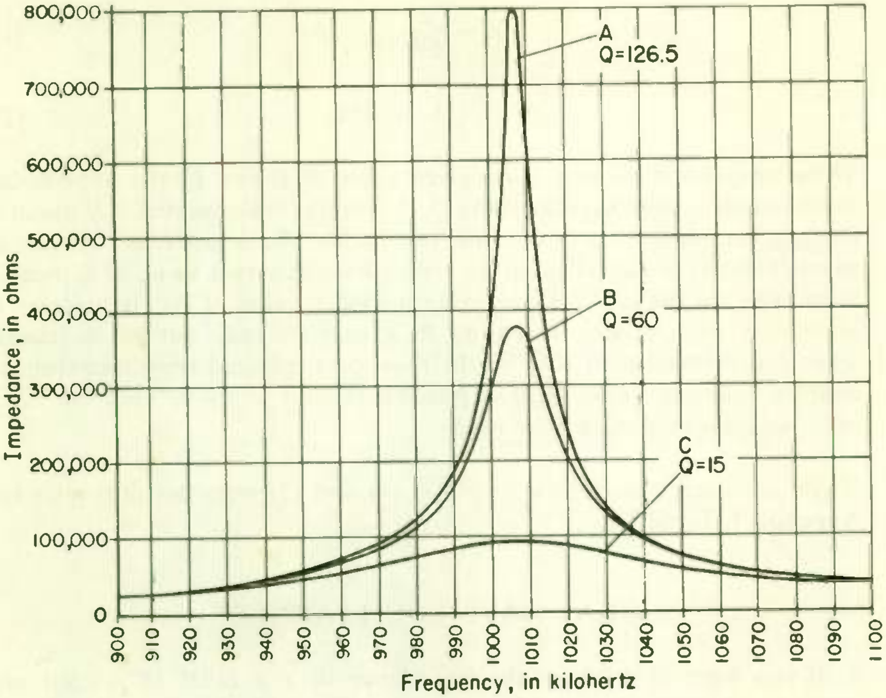

Fig. 15 How Q affects impedance of parallel LC circuit.

$$Z = \frac{E}{I_t} = \frac{100}{125 \times 10^{-6}} = 800{,}000\ \Omega$$

The impedance at other frequencies can be found by the same formula, taking the values for I_t from Fig. 11. Plotting points for the impedance at various frequencies enables us to draw the curve of Fig. 14 showing the impedance at various frequencies. To get a better look at the impedance at frequencies near resonance, curve *A* in Fig. 15 has been drawn to show the impedance for frequencies between 900 and 1100 kHz.

Curves *B* and *C* in Fig. 15 show the impedance for *Q* values of 60 and 15 The three curves in the figure show the striking effect the circuit *Q* has on the impedance curve. All three curves are for the values of *L* and *C* in Fig. 12, *R* being increased for curves *B* and *C* as required for *Q* values of 60 and 15.

The most important impedance value associated with parallel resonance is the impedance at resonance. This can be found by either of the following formulas:

$$Z = \frac{L}{CR} \tag{1}$$

$$Z = QX_L = QX_C \tag{2}$$

These formulas show that, for a given value of L and C, the impedance at resonance is proportional to the Q. Formula (1) shows that if R doesn't change, the higher the L/C ratio, the higher the impedance. From a practical point of view, this can be misleading. A larger value of L means more wire on the coil and therefore a higher value of R. If you can't increase L without also increasing R, Z may or may not be increased when L is increased. If R is for the most part reflected resistance from a coupled load (see Topic 4), it is possible to vary Z by varying the L/C ratio, and this method is often used.

If you are interested in how formulas (1) and (2) were derived, refer to Appendix I, Topic 23.

WHAT HAVE YOU LEARNED?

1. If you want to calculate the impedance of a parallel LC circuit on both sides of resonance, you *(can) (cannot)* use the formula $Z = \frac{L}{CR}$.

2. The impedance is minimum at the resonant frequency in a (a) *(series) (parallel)* LC circuit, and the impedance is maximum at the resonant frequency in a (b) *(series) (parallel)* LC circuit.

3. Refer to Fig. 14. As the frequency departs from resonance the impedance of the parallel LC circuit rapidly ______________.

4. Find the impedance of a parallel resonant circuit when $C = 50$ pF, $L = 250\ \mu$H, and $R = 8\ \Omega$.

5. Find the impedance of a parallel resonant circuit when $L = 500\ \mu$H, $f_0 = 750$ kHz, and $R = 75\ \Omega$.

ANSWERS

1. Cannot . . . The formulas $Z = \frac{L}{CR}$ and $Z = QX_L$ can be used only to calculate the impedance at the resonant frequency.
2. (a) Series; (b) parallel   3. Decreases
4. 625 k Ω . . .

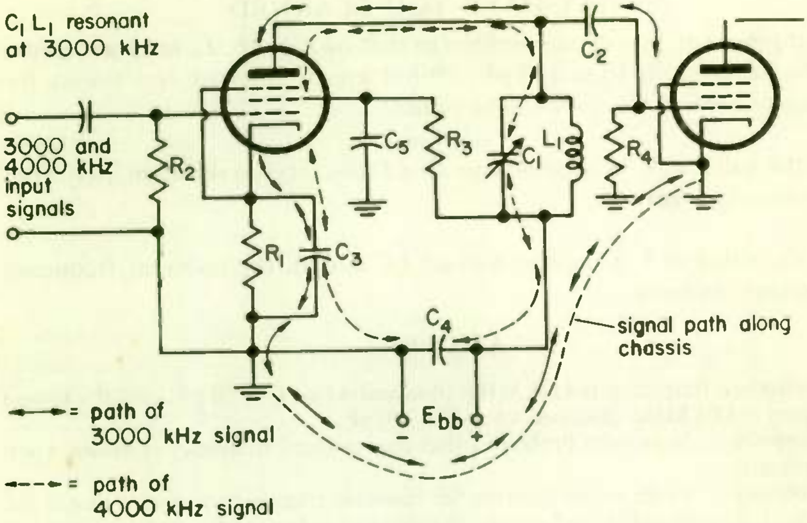

Fig. 16 The use of an *LC* circuit for tuning a stage.

$$Z = \frac{L}{CR} = \frac{250 \times 10^{-6}}{50 \times 10^{-12} \times 8} = \frac{250}{400} \times 10^{6} = 0.625 \times 10^{6} = 625\ \text{k}\Omega.$$

5. 73.9 kΩ . . . We must use a formula that will fit the given conditions. We could use the formula used in Problem 4, but we would have to find the value of C by using $C = \dfrac{1}{4\pi^2 f_0^2 L}$. However, there is an easier solution.

$$Z = QX_L \qquad Q = X_L/R = \frac{2 \times 3.14 \times 750 \times 10^3 \times 500 \times 10^{-6}}{75}$$

$$= \frac{2355}{75} = 31.4;\ \ 31.4 \times 2355 = 73.9\ \text{k}\Omega.$$

10 EXAMPLE OF A PARALLEL *LC* CIRCUIT IN USE . . . A common use of parallel *LC* circuits is for tuning—that is, for adjusting an amplifier so that the desired frequency is amplified and undesired frequencies are not. Tuned circuit C_1L_1 is used for this purpose in Fig. 16.

For simplicity we assume that only two frequencies, 3000 and 4000 kHz, are applied to the input of the amplifier stage. It is desired to suppress the 4000-kHz signal and pass only the 3000-kHz signal to the next stage. For this purpose C_1L_1 is tuned by varying the value of C_1 until it is resonant at 3000 kHz. It then offers a high impedance to the 3000-kHz signal, forcing this signal to go to the grid of the following stage. The parallel resonant circuit offers a low impedance to the 4000-kHz signal, so that this signal takes the path shown through C_1L_1 and therefore does not go to the grid of the next stage.

WHAT HAVE YOU LEARNED?

1. Suppose that, in a circuit similar to that of Fig. 16, L_1 is 20 μH and C can be varied from 10 to 140 pF. What are the highest and lowest frequencies to which the stage can be tuned?

2. If the value of C is increased in an LC circuit, the resonant frequency *(increases) (decreases).*

3. If the value of L is increased in an LC circuit, the resonant frequency *(increases) (decreases).*

ANSWERS

1. The highest frequency is 11.3 MHz, obtained when C is 10 pF, and the lowest frequency is 3.01 MHz, obtained when C is 140 pF.
2. Decreases . . . Note from Problem 1 that the resonant frequency is lowest when C is greatest.
3. Decreases . . . Examine the formula for resonant frequency and note that if the value for L is increased in the formula, the value of f_0 decreases.

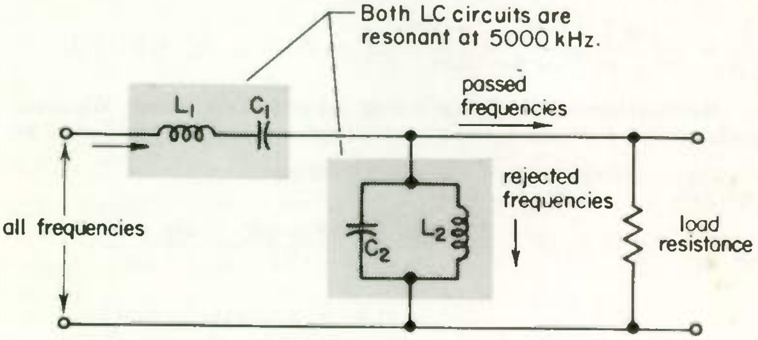

Fig. 17 Bandpass filter to pass 5000 kHz and reject higher and lower frequencies.

11 USE OF RESONANT CIRCUITS AS FILTERS . . . Figure 17 shows the use of a series resonant circuit L_1C_1 in conjunction with a parallel resonant circuit C_2L_2 to form a *bandpass filter.* A bandpass filter is one that will pass one frequency or a band of frequencies and block all others. The circuit of Fig. 17 passes 5000 kHz and close-by frequencies and blocks all others.

The series resonant circuit L_1C_1 is made resonant at 5000 kHz, and it therefore has a low impedance to a 5000-kHz signal and a high impedance to all other frequencies. Thus L_1C_1 alone forms a bandpass filter, and it would be quite satisfactory for many purposes. However, the impedance of L_1C_1 to frequencies other than the desired one is not sufficient to completely block the unwanted signals.

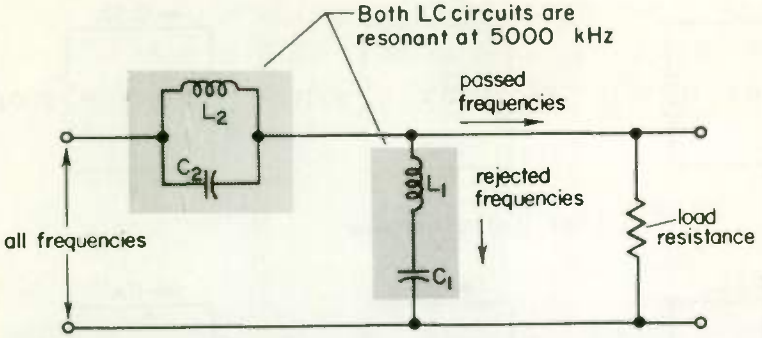

Fig. 18 Band-rejection filter to blockout 5000 kHz and pass all other frequencies.

The weakened but still present unwanted signals passing through L_1C_1 are further attenuated by the parallel resonant circuit C_2L_2. Because its impedance is high at the resonant frequency, the desired pass frequency, 5000 kHz, is not attenuated. C_2L_2 acts as a low impedance to other frequencies, so that they are shunted through this path and do not reach the load.

In Fig. 18 is shown a typical band-rejection filter. Such a filter passes all frequencies except a specific band, which it rejects. Its principle of operation is the same as that of a bandpass filter, but its function is to block an undesired frequency or frequencies. Observe that this filter also contains both series and parallel resonant circuits, but the order is reversed. The parallel resonant circuit offers a high impedance to undesired frequencies, while the series resonant circuit offers what amounts to a short circuit to ground.

RESONANT CIRCUITS USED WITH CURRENT SOURCES

In all the discussion so far in this lesson we have assumed a constant a-c voltage being applied to the *LC* circuit. Resonant circuits are more often than not used with signal sources that are more constant-current than they are constant-voltage.

12 *LC* RESPONSE TO CONSTANT CURRENT . . . Figure 19 will show you the difference between a constant-voltage and a constant-current source. With the constant-voltage source of (a), no matter what the value of the load resistance *R* is, the voltage stays at 100 V, but varying *R* causes

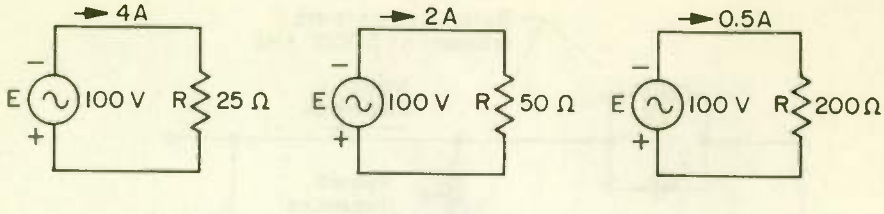

(a) Voltage source

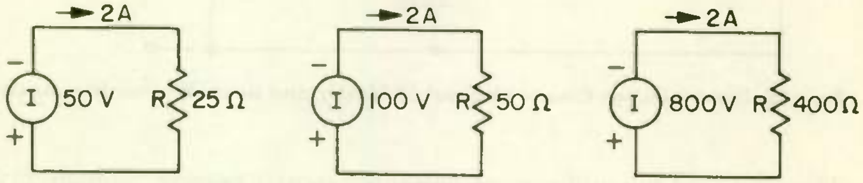

(b) Current source

Fig. 19 Constant-voltage and constant-current sources.

the current to vary. With the constant-current source of (b), no matter what the value of the load resistance *R* is, the current stays constant at 2A, but varying *R* causes the voltage to vary.

An ordinary battery and the power mains in your home are examples of constant-voltage sources. The signal output from a transistor as it is most commonly operated is a good example of a constant-current source. Over a wide range of load values, the signal current output from a transistor will stay approximately constant, while the signal voltage across the load will vary with the load resistance.

Of course, most sources of power are neither perfect constant-voltage nor perfect constant-current sources. For example, the voltage of a battery doesn't stay absolutely constant, but drops some when the battery is required to deliver more current. Similarly, the signal current output from a transistor will vary a little as the load is varied.

Figure 20 shows the difference in frequency response for series and parallel *LC* circuits used with constant-voltage and constant-current sources. You have already studied the series *LC* circuit of (a) across a constant-voltage source. The *LC* circuit impedance is low at resonance, so that the current reaches its maximum value at resonance as shown. In (b) a constant current flows through the series *LC* circuit. The voltage across the entire circuit is, of course, $E = IZ$. With I constant, the voltage will be proportional to Z. Since the impedance Z is a minimum at resonance, the voltage reaches a minimum at resonance.

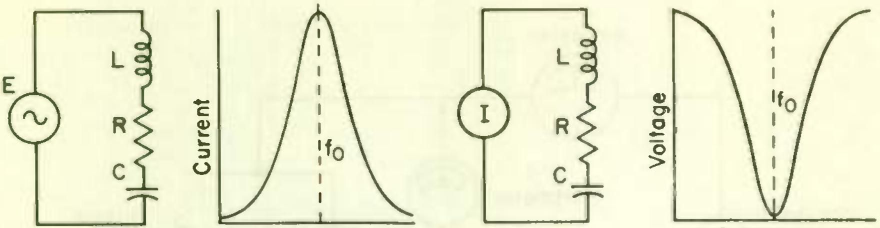

(a) Series circuit – constant voltage (b) Series circuit – constant current

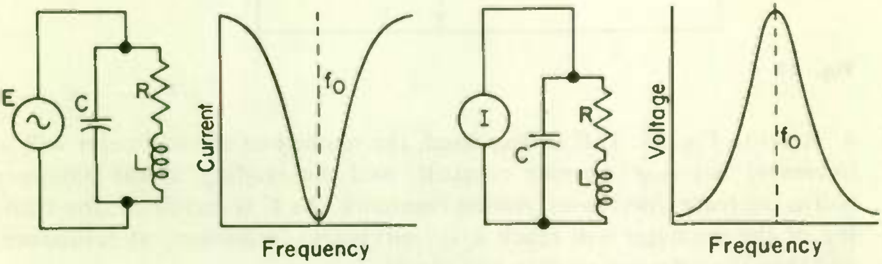

(c) Parallel circuit – constant voltage (d) Parallel circuit – constant current

Fig. 20 Constant-voltage and constant-current *LC* circuit frequency response.

The parallel *LC* circuit of Fig. 20(c) is another one with which you are already familiar. The impedance reaches a maximum at resonance, and therefore the current, equal to E/Z, is minimum at the resonant frequency. If a constant current rather than a constant voltage is applied, the voltage, equal to IZ, is proportional to the impedance. Therefore, in (d) the voltage is maximum at resonance.

WHAT HAVE YOU LEARNED?

1. Refer to Fig. 21. If *C* is changed, so the circuit is no longer at resonance, the reading of the voltmeter (a) *(will) (will not)* change and the reading of the ammeter (b) *(will) (will not)* change.

2. Refer to Fig. 21. The reading of the voltmeter when *C* is increased will be (a) *(more) (less)* than the voltage at resonance. If *C* had been decreased, the voltmeter reading would have (b) ____________________ .

3. Refer to Fig. 22. If *C* is increased, the reading of the voltmeter (a) *(will) (will not)* change and the reading of the ammeter (b) ____________________ change.

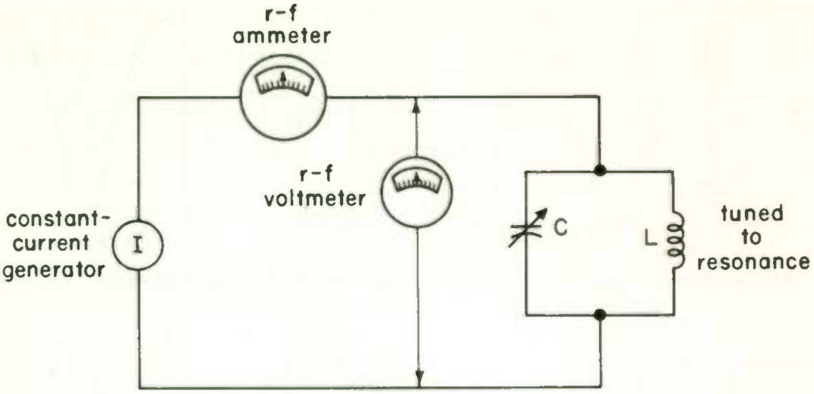

Fig. 21

4. Refer to Fig. 22. If C is decreased, the reading of the voltmeter will (a) *(increase) (decrease) (remain constant)* and the reading of the ammeter will (b) *(increase) (decrease) (remain constant).* As C is increased, the reading of the ammeter will reach a (c) *(maximum) (minimum)* at resonance, and then the ammeter reading will rapidly (d) ______________.

5. If the frequency of a constant a-c current applied to a series LCR circuit is decreased from above resonance to below resonance, the voltage across the circuit will first (a) *(increase) (decrease)* to a (b) *(maximum) (minimum)* at resonance and then rapidly (c) ______________.

6. Assume a constant a-c voltage across an LCR series circuit. As the frequency of the applied voltage is varied from below resonance to above resonance, the current through the LCR circuit will first (a) *(increase)*

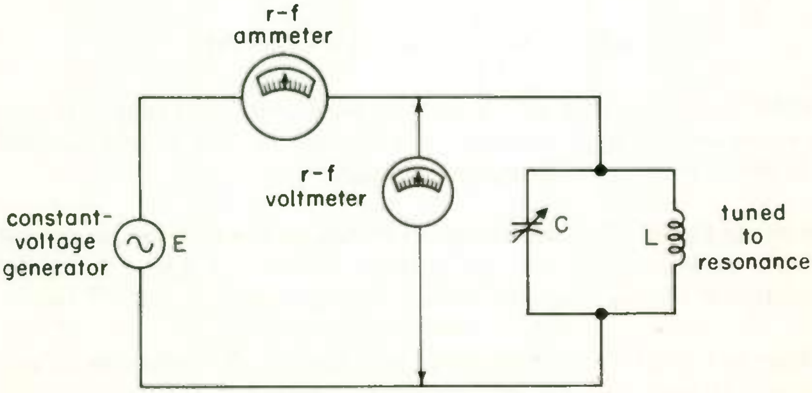

Fig. 22

(decrease) until at resonance the current will be a (b) *(maximum) (minimum)*. As the frequency continues to increase, the current through the circuit will rapidly (c) _______________ .

ANSWERS

1. (a) Will; (b) will not
2. (a) Less; (b) decreased 3. (a) Will not; (b) will
4. (a) Remain constant; (b) increase; (c) minimum; (d) increase
5. (a) Decrease (b) Minimum (c) Increase . . . See Fig. 20(b).
6. (a) Increase (b) Maximum (c) Decrease . . . See Fig. 20(a).

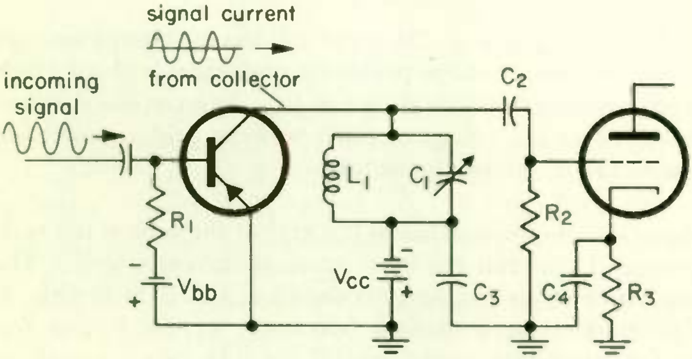

(a) Circuit

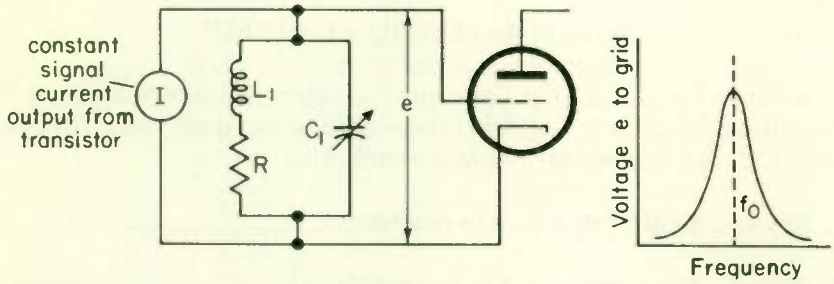

(b) Equivalent circuit

Fig. 23 Using a parallel tuned circuit with a constant current source.

13 EXAMPLE OF USE OF A CONSTANT-CURRENT SOURCE... The hybrid circuit—that is, a circuit that uses both tubes and transistors—of Fig. 23(a) is tuned by the parallel circuit L_1C_1 to amplify the desired frequency. Since a tube is a voltage-amplifying device, the object of the tuned LC circuit is to get as high a signal voltage as possible on the grid of

the tube at the desired frequency and as small a signal voltage as possible at undesired frequencies.

The equivalent circuit is shown in Fig. 23(b). Since a transistor has a constant signal current output, the transistor is replaced in (b) by a constant-current generator. When we refer to a transistor as having a constant-current output, we don't mean that the amplitude of the signal current output won't vary in accordance with the amplitude of the incoming signal applied to the base. It will. What we do mean is that varying the impedance of the load that the output signal is feeding into (the parallel L_1C_1 circuit) will not appreciably affect the signal current amplitude.

Capacitors C_2, C_3, and C_4 in Fig. 23(a) can be assumed large enough in capacitance that the signal voltage passes through them without much loss. Hence these capacitors are not shown in (b). The voltage e across L_1C_1 may be assumed as the voltage applied between grid and cathode of the tube, to be further amplified by the tube.

Figure 23(b) shows that the voltage fed to the grid of the tube is the voltage across a parallel LC circuit fed by a constant-current source. The voltage response with varying frequency is shown at the right in (b). If L_1C_1 is tuned to resonate at the desired frequency, signals at that frequency present a good voltage to the grid of the tube, while signals at other frequencies feed only weak voltages to the tube grid.

WHAT HAVE YOU LEARNED?

1. Refer to Fig. 23(b). L_1C_1 presents a (a) *(high) (low)* impedance to the desired frequency and a (b) *(high) (low)* impedance to undesired frequencies. L_1C_1 is a (c) *(bandpass) (band-rejection)* filter.

2. Review. Resistor R_3 is used to provide ____________________.

3. Review. The purpose of R_2 is to provide a d-c (a) __________ to ground so the tube does not block. R_2 also provides a d-c path to the grid for the (b) __________ voltage.

ANSWERS

1. (a) High (b) Low (c) Bandpass . . . L_1C_1 passes the desired signal and rejects the undesired frequencies. The voltage applied to the tube will be high at the desired frequency and low at the undesired frequencies.
2. Cathode bias 3. (a) Path; (b) bias

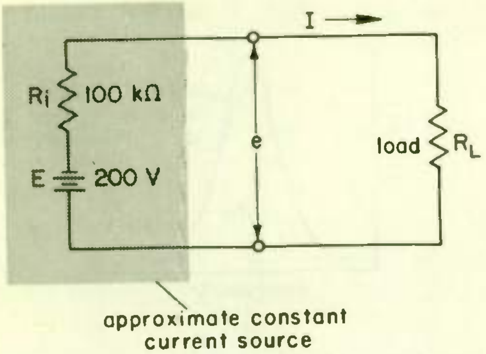

Fig. 24 An approximate constant-current source with load.

14 APPROXIMATE CURRENT SOURCES . . . A high resistance in series with a constant voltage forms an approximate constant-current source. If E in Fig. 24 is constant and the load R_L is a varying value but always much less in resistance than R_i, the current I is approximately constant. Problems 1 and 2 at the end of this topic show you that this is true. As long as R_i is much larger than R_L, the resistance of R_L is such a small part of the total resistance that it doesn't affect the current much.

If R_L is so large—say, 20,000 Ω or over in Fig. 24—that it is a substantial part of the total resistance, then I will vary considerably with changes in R_L. ER_i is then a quite imperfect current source. As R_L increases, I goes down. Therefore, the voltage e rises less as R_L increases than it would if the current stayed constant. How this affects the tuning of a parallel resonant circuit is shown in Fig. 25. As the dashed curve in (b) shows, the circuit will not tune as sharply if the current source does not hold its current output constant.

Looking once more at Fig. 24, if R_i were changed to a low value, so that the R_L were high compared to R_i, then the voltage across the load R_L would stay fairly constant. Hence, the difference between a voltage and current source is a matter of whether R_i is high or low compared to the load resistance. High-impedance sources are generally current sources, and low-impedance sources are generally voltage sources.

WHAT HAVE YOU LEARNED?

1. Refer to Fig. 24. When R_L is 10 kΩ, I is (a) ________ milliamperes. If R_L is 5 kΩ, the circuit current will be (b) ________ milliamperes.

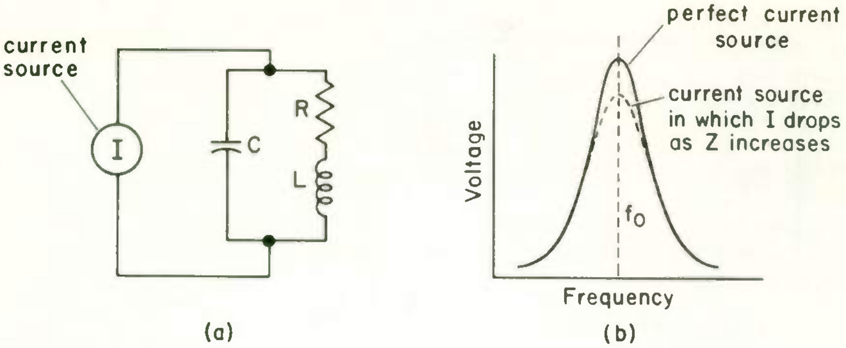

(a) (b)

Fig. 25 **A parallel resonant circuit across a current source will not tune sharply if the current goes down when load impedance increases.**

2. Refer to Problem 1. When R_L was halved, the circuit current increased a *(large) (small)* amount.

3. Refer to Fig. 24. Assume R_i is 10 Ω and R_L is 10 kΩ. Find (a) I and (b) the voltage across the resistor, E_{R_L}. If R_L is increased to 15 kΩ, find (c) I and (d) E_{R_L}.

4. Refer to Problem 3. Increasing R_L by one-half changed the value of E_{R_L} a *(large) (small)* amount.

5. If R_i in Fig. 24 is the internal impedance of the power supply, the power supply is a constant (a) *(voltage) (current)* source if R_L is large compared to R_i. The power supply is a (b) ______________ source if R_i is large compared to R_L.

6. Refer to Fig. 25. If the impedance of the LCR circuit is equal to one-half the internal impedance of the current source, the LCR circuit (a) *(will) (will not)* tune sharply. This means that the voltage, at resonance, across the circuit will be less than if the LCR circuit impedance were much (b) ______________. The current source (c) *(is) (is not)* a good constant-current device.

ANSWERS

1. (a) 1.82 . . . $I = \frac{E}{R} = \frac{200}{100 \times 10^3 + 10 \times 10^3} = \frac{200}{110 \times 10^3} = 1.82 \times 10^{-3}$
(b) 1.90
2. Small . . . The increase was 0.08 mA or 0.00008 A. The per cent of current increase was only 4.4% for a decrease in load resistance of 50 per cent.
3. (a) 19.98 mA (b) 199.8 V . . . $E_{R_L} = IR_L = 19.98 \times 10^{-3} \times 10 \times 10^3$
(c) 13.32 mA; (d) 199.87 V . . . To obtain 199.87, calculate current to six significant figures.

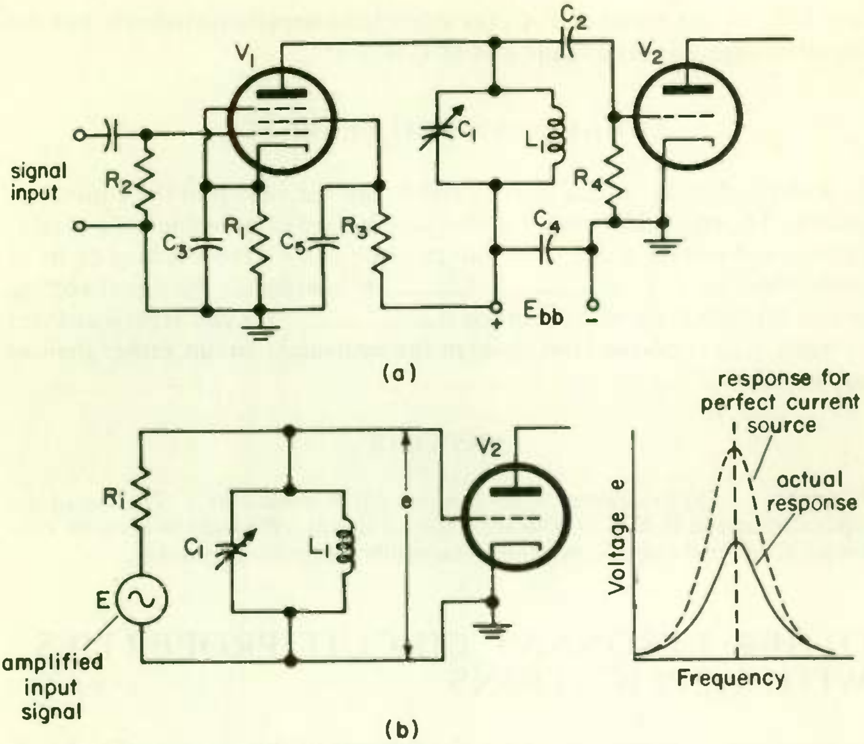

Fig. 26 Circuit of Fig. 16 redrawn with its equivalent circuit.

4. Small . . . A 50 per cent increase in load resistance changed the voltage across the load 0.07 V, a change of 0.04 per cent.
5. (a) Voltage; (b) constant current
6. (a) Will not . . . See Fig. 25. (b) Lower (c) Is not

15 EXAMPLE OF PARALLEL *LC* IN A VACUUM-TUBE CIRCUIT . . .

The operation of the circuit in Fig. 26(a) has been previously explained by saying that C_1L_1 offers a high impedance to the signal output from V_1, forcing the signal to take the path through C_2 to the grid of V_2. We will now take a more advanced look at the operation of this circuit.

In the equivalent circuit of Fig. 26(b), E is a constant voltage equal to signal input to the grid of V_1 multiplied by the tube μ. R_i is the internal resistance of the tube (the plate resistance). Since R_i is a rather high value, E and R_i form an approximate constant-signal-current source. The voltage fed to the grid of V_2 varies with frequency as shown to the right of (b). Off resonance where the impedance is low, e, which is equal to $I \times Z$, is also low. A low value of L_1C_1 (or other load impedance) shorts out the signal voltage, so that e to the grid of V_2 is small.

WHAT HAVE YOU LEARNED?

1. Refer to Fig. 26. Capacitors C_2 and C_3 are not shown in the equivalent circuit. The equivalent circuit shown here is used to show the (a) *(a-c) (d-c)* current and voltage paths. The values of C_2 and C_3 are assumed to be of such value that their (b) ________________ is low; hence the signal voltage passes through them without much (c) __________ . We can represent them as being (d) *(a conductor) (an open)* in the equivalent circuit rather than as capacitors.

ANSWERS

1. (a) A-c (b) Reactance (c) Loss (d) A conductor . . . The use of the equivalent circuit in Fig. 26 is to show the a-c circuit. We want to consider only the a-c action in the circuit; therefore we simplify it as much as possible.

OTHER RESONANT CIRCUIT PROPERTIES WITH APPLICATIONS

Bandwidth and flywheel effect are the subjects of this section. The bandwidth of a circuit determines its suitability for accepting desired frequencies and rejecting undesired frequencies. Just as a flywheel continues to spin after its source of power is removed, so an LC circuit continues to oscillate at its resonant frequency after its power source is removed. There are many useful applications of this property of resonant circuits.

16 BANDWIDTH OF TUNED CIRCUITS . . . Since LC circuits are used for circuit tuning, the sharpness of their frequency response curve at resonance is of considerable interest. The range of frequencies over which the frequency response curve is at least 70.7 per cent of its voltage or impedance value at resonance is called the *bandwidth* of the circuit. In Fig. 27 the curve is at 70.7 per cent or more of its maximum value for the frequencies between 3040 and 3060 kHz. Therefore, the bandwidth is 3060 − 3040 = 20 kHz.

In practical terms, the bandwidth is an indication of the range of frequencies to which the circuit responds. Suppose, for example, that the circuit of Fig. 27 is used as a tuned circuit in a radio receiver. Although a signal at exact resonance, 3050 kHz, is received best, all frequencies between 3040 and 3060 kHz will be received fairly well. Frequencies further away

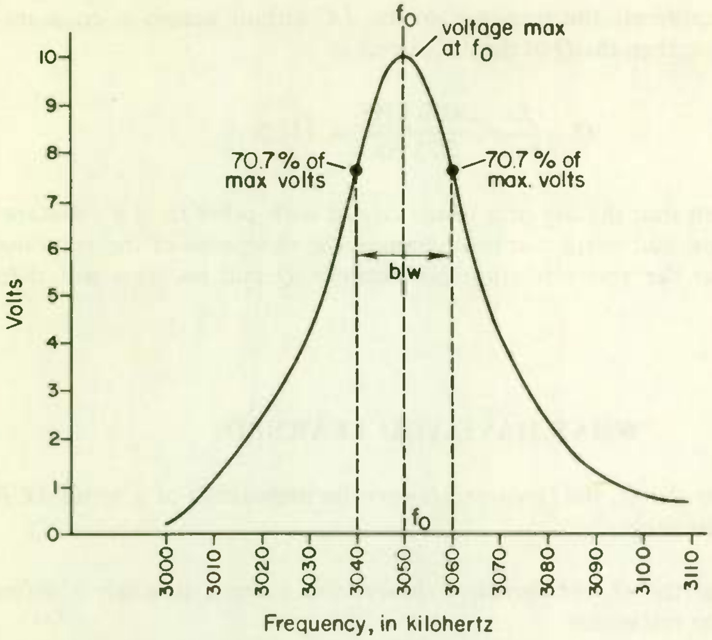

Fig. 27 Frequency-response curve for a tuned circuit.

from resonance will tend to be rejected. While the response for the curve of Fig. 27 is in volts, the bandwidth would be found the same way for a graph giving response in current, such as for a series *LC* circuit across a constant-voltage source.

Sometimes you will see resonant frequency curves that show the response in terms of power rather than current or voltage. For such a response curve the bandwidth is the range of frequencies between the two half-power points, that is, the frequencies between two points (one above and one below resonance) where the power is 50 per cent of its value at resonance. The reason we use 50 per cent rather than 70.7 per cent for power is that power varies as the square of the current or voltage; $0.707^2 = 0.50$. Hence, 50 per cent with power corresponds to 70.7 per cent with current or voltage.

You have already learned that a high-*Q* *LC* circuit gives sharp tuning. Hence, the higher the *Q*, the narrower the bandwidth. An *LC* circuit used across a true constant-voltage or true constant-current source has a bandwidth and *Q* related by the formula

$$bw = \frac{f_0}{Q} \qquad \text{or} \qquad Q = \frac{f_0}{bw}$$

If Fig. 27 represents the response of an *LC* circuit across a constant-current source, then the Q of the *LC* circuit is

$$Q = \frac{f_0}{bw} = \frac{3050\ \text{kHz}}{20\ \text{kHz}} = 152.5$$

You have seen that the use of a tuned circuit with other than a constant-voltage or constant-current source changes the sharpness of the response curve, so that the above relationship between Q and bw does not then apply.

WHAT HAVE YOU LEARNED?

1. The higher the Q, the *(greater) (lower)* the impedance of a series *LCR* circuit at resonance.

2. The higher the Q, the *(greater) (lower)* the current through a series *LCR* circuit at resonance.

3. The higher the Q of a series *LCR* circuit, the *(broader) (sharper)* the current response curve.

4. The sharper the response curve, the *(wider) (narrower)* the bandwidth.

5. If you were building a receiver and wanted to make it very selective, you would use a (a) *(high Q) (low Q) LC* circuit so the received bandwidth would be (b) ______________ .

ANSWERS

1. Lower 2. Greater 3. Sharper 4. Narrower
5. (a) High Q (b) Narrow . . . The selectivity of the receiver would be poor if the bandwidth were such that more than one signal was passed and amplified at the same time. This can occur in crowded signal areas. The Q of the tuning circuit should be high enough that the bandwidth of the tuning circuit will pass only the desired signal.

17 CIRCULATING CURRENTS IN TANK CIRCUITS . . . The heavy currents I_C and I_L in a parallel *LC* circuit at resonance can be considered as a single current flowing back and forth within L and C in series. If the circuit of Fig. 28(a) is at resonance, I_L and I_C have the same instantaneous value for every moment of each cycle. But I_L and I_C as seen by the voltage source are 180° out of phase with each other. You have learned that two

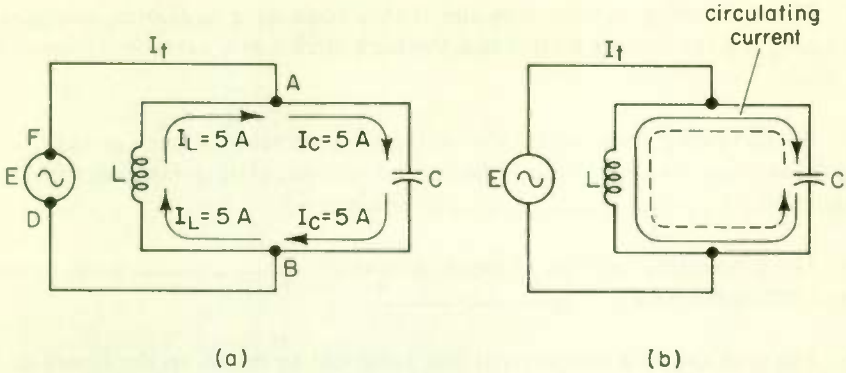

Fig. 28 At resonance a circulating current swishes back and forth within the LC tank circuit.

currents 180° out of phase from each other flow in opposite directions with respect to the applied voltage during every moment of the cycle.

Suppose that at a certain instant I_L is 5 A and is flowing up through *L* toward terminal *F* of the voltage source *E* as shown in Fig. 28(a). Now at this same moment I_C must also be 5 A and must be flowing away from terminal *F* of *E*; that is, I_C must be flowing down through capacitor *C* as shown. Now Fig. 28(a) shows 5 A flowing to point *A* and 5 A flowing away from point *A*. That being the case, we can consider the current I_L as going right on past point *A* to form current I_C. That is, the 5 A in Fig. 28(a) can be considered as a single current that leaves the bottom plate of *C*, flows past *B* and through *L*, then past *A* and back to the top plate of *C*. At the next half-cycle, of course, direction of this current is opposite, and the instantaneous value of this current varies throughout the cycle.

The current that swishes back and forth each cycle between *L* and *C*, as just described, and as shown in Fig. 28(b), is called the *circulating current*. *L* and *C* form what is known as the *tank circuit*, since it holds the heavy circulating current and the energy associated with the current. Since the circulating current changes direction twice each cycle, the tank circuit is said to *oscillate*. The current I_t supplied by *E* is just sufficient to make up the losses in the unavoidable resistance of the tank circuit and thus keep the oscillations going.

WHAT HAVE YOU LEARNED?

1. The circulating current in a tank circuit at resonance compared to the line current *(is) (is not)* heavy.

2. The circulating current sees the tank circuit as a (a) *(series) (parallel)* circuit, and the voltage source sees the tank circuit as a (b) *(series) (parallel)* circuit.

3. At the resonant frequency, the voltage source sees the tank circuit as a (a) *(maximum) (minimum)* impedance and the circulating current sees the tank circuit as a (b) ______________ impedance.

4. The circulating current changes direction (a) ____________ each cycle, and the tank is said to (b) ______________ .

5. The tank draws a line current just sufficient to make up the losses due to the ______________________ of the tank.

6. The strongest oscillations occur at the ______________ frequency.

ANSWERS

1. Is . . . See Fig. 13(a) and Topic 8.
2. (a) Series . . . The current circulating back and forth in the tank sees the inductor and capacitor in series.
(b) Parallel . . . See Fig. 28. The voltage source is across the tank and sees the inductor and capacitor in parallel.
3. (a) Maximum; (b) minimum 4. (a) Twice; (b) oscillate
5. R-f resistance 6. Resonant

18

FLYWHEEL EFFECT . . . Because of the energy stored in the fields of the inductor and the capacitor of an *LC* circuit, current will continue to circulate back and forth between *L* and *C* after the source of power is removed. This oscillatory action is called flywheel action or flywheel effect.

Figure 29 shows a direct voltage source, a switch, and a parallel *LC* circuit. When the switch is closed, the capacitor charges to the source voltage and remains charged to that value as long as the switch is closed. The inductor, after its initial opposition to the start of current, allows a steady value of current to flow through it. When the switch is opened, the capacitor starts discharging through the inductor, causing a flux field to build up around it. After the capacitor is completely discharged, the flux lines around the inductor begin to collapse, and tend to maintain the current in the same direction until the lines have completely collapsed.

This action on the part of the inductor causes the capacitor to charge again with a polarity opposite to that of the original charge. When the field around the inductor has completely collapsed, the capacitor dis-

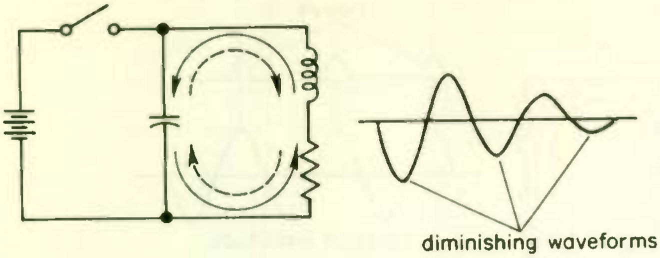

Fig. 29 A d-c circuit that demonstrates flywheel action.

charges in a new direction and produces current through the inductor in the new direction, again building up a field. When the capacitor has discharged, the inductor and its field recharge the capacitor to its original polarity. In a perfect circuit this back-and-forth action would continue indefinitely. However, there is some resistance present in the inductor, and with each cycle of this flywheel action, some energy is dissipated by the resistance. The higher the Q of the circuit, the longer the flywheel action continues. The diminishing waveform of Fig. 29 is representative of flywheel action.

The circuit of Fig. 29 is a parallel arrangement, but when the switch is open and the source voltage is removed, L and C are in series. This is more easily understood if the capacitor, after the switch is opened, is considered to be a voltage source.

The frequency of the *oscillation* in Fig. 29 is the resonant or natural frequency of the LC combination. This is reasonable, since the capacitor completely discharges and the inductor experiences a complete collapse of its flux lines. For this to occur, X_L and X_C must be equal. This is the basic criterion for resonance.

Let us now consider Fig. 30, which contains the same LC parallel combination but in which the source voltage and the switch have been replaced by a pulse generator. The output of the generator is a series of positive pulses at the resonant frequency of the parallel circuit. In Fig. 29 each succeeding half-cycle of flywheel current is less than the preceding one. With a series of positive pulses occurring as shown in Fig. 30, the energy dissipated by the circuit resistance in each complete cycle of flywheel action is replaced by the positive pulses from the generator. The waveform in Fig. 30 is constant in amplitude. We could have shown this restoration of lost energy in Fig. 29 if we had closed the switch once in every cycle of flywheel action. However, closing the switch at precisely the correct time would be difficult.

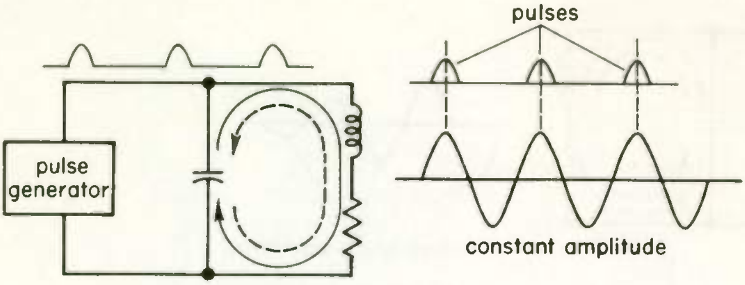

Fig. 30 Flywheel action utilizing pulse generator.

Let us now consider a circuit such as the one shown in Fig. 31. Observe that the frequency of the pulse generator is now one-half the resonant frequency of the parallel circuit. In this case, after every second cycle of flywheel or oscillator action, energy is restored to the circuit. Observe that here we have used a source of one frequency and with it have sustained oscillations of a higher frequency. In some instances, with high circuit Q, it is possible to sustain oscillations when the frequency of the resonant circuit is 10 or more times greater than the frequency of the device that restores the lost energy.

For maximum amplitude of the oscillations in the LC circuit, the frequency of the pulse generator must either exactly equal the resonant frequency of the LC circuit or be some exact submultiple (such as one-half or one-third) of the resonant frequency. If the pulse frequency is different from the resonant frequency or different from a submultiple of it, the LC circuit will be forced to oscillate at a frequency other than its resonant frequency. The amplitude of the oscillations will then be much less than at resonance, and the further from resonance the oscillations are the weaker they will be.

WHAT HAVE YOU LEARNED?

1. The frequency at which (a) ____________ action occurs is the natural or resonant frequency of the circuit. The formula for computing this frequency is the one derived from the fact that (b) ______ equals (c) ______ .

2. If a pulse generator restores energy to a resonant circuit every fourth cycle, the circuit has a frequency (a) ______ times (b) *(greater) (less)* than that of the pulse generator.

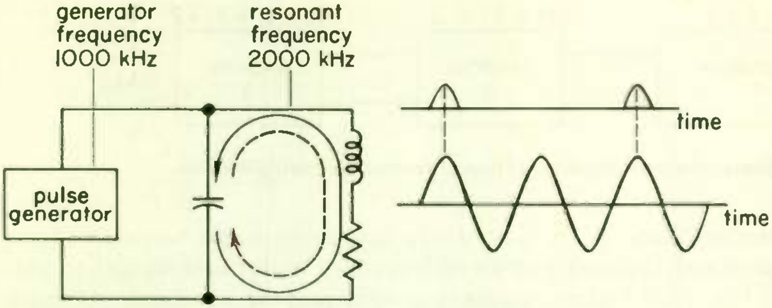

Fig. 31 Example of flywheel action and frequency doubling.

ANSWERS

1. (a) Flywheel; (b) X_L; (c) X_C 2. (a) 4; (b) greater

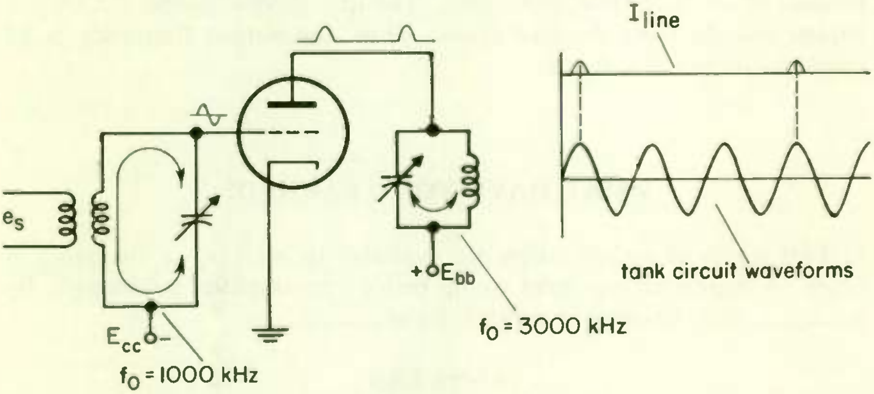

Fig. 32 Frequency multiplication utilizing a biased vacuum-tube amplifier.

19 FREQUENCY MULTIPLICATION USING VACUUM TUBES...

A practical circuit using the principles of the preceding topic to increase frequency is shown in Fig. 32.

In the grid circuit of the vacuum tube there is a circuit whose resonant frequency is 1000 kHz. The bias on the tube is such that conduction occurs only when the voltage across the tuned grid is positive enough to overcome the bias voltage. The tank circuit in the plate lead of the tube has a resonant frequency of 3000 kHz. Every time the tube conducts, a pulse of current flows in the plate circuit. This pulse of current, called line current, I_{line}, restores energy dissipated within the plate tank circuit. Thus, we have multiplied the frequency by a factor of 3 by utilizing the vacuum tube. This method is often used to obtain the operating frequency in

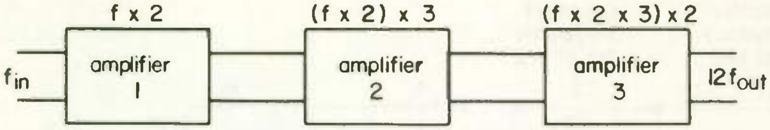

Fig. 33 Block-diagram representation of frequency multiplication.

transmitter applications. A lower-frequency, more stable resonant circuit may be used and, through a series of frequency multipliers similar to that shown in Fig. 32, a higher-frequency output may be obtained. Observe in Fig. 32 that the vacuum tube conducts for a relatively small part of the time.

In summary, we may say that flywheel action, or oscillation, is useful in frequency multiplication. Figure 33 shows, in block diagram form, a series of frequency multipliers. Observe that the final frequency is the product of all of the multiplications. The first stage doubles, the second triples, and the third doubles again. Thus, the output frequency is 12 times greater than the input.

WHAT HAVE YOU LEARNED?

1. Two stages of amplification are available to multiply a frequency 8 times. A logical arrangement would be for one amplifier to multiply by (a)_______ and the other to multiply by (b)_______.

ANSWERS

1. (a) 2; (b) 4

COMPARING SERIES AND PARALLEL RESONANCE

20 IMPEDANCE COMPARISON . . . Resonant circuits are so important in electronics that we will now summarize their characteristics to help you understand them better. Series and parallel resonant circuits have opposite characteristics. The parallel circuit at resonance has a very high impedance, and as the frequency departs from resonance the impedance rapidly decreases to a low value. The series circuit at resonance has a very low impedance, and as the frequency departs from resonance the impedance rapidly increases to a high value.

Just how high the impedance will be at parallel resonance, or how low at series resonance, depends upon the ohmic resistance in the resonant circuit. If the resistance is zero, the series circuit at resonance will have zero impedance, and the parallel circuit will have infinite impedance at resonance. However, it is impossible to have zero resistance, since there is always the resistance of the wire used to wind the inductor. It is usually desirable to keep this resistance as low as possible. The lower this resistance is, the lower the impedance in a series resonant circuit and the higher the impedance in a parallel resonant circuit. Since a low coil resistance means a high coil Q, we can also say that the higher the Q, the lower the impedance at series resonance and the higher at parallel resonance.

Resonant circuits are so useful in electronics because they have a high impedance at some frequencies and a low impedance at others. They thus differ from resistors, which have a high impedance at all frequencies. Resonant circuits are used in place of resistors when it is desired to have a much higher or a much lower impedance at one frequency than at other frequencies. For example, in Fig. 26(a) a resistor could be used in place of C_1L_1 if it were desired to amplify all frequencies. The circuit is then identical with amplifier circuits discussed in preceding lessons.

21 REACTANCE AND RESISTANCE . . . In discussing resonant circuits it is important to keep clearly in mind the difference between impedance, reactance, and resistance. The impedance is the *total opposition* to current flow, and it is made up of resistance and reactance. In a circuit that has no reactance, like a d-c circuit, the impedance is equal to the resistance. In a circuit that has no resistance, like a capacitor across an a-c voltage, the impedance is equal to the reactance. Reactance is the opposition to current flow that tends to shift the current to 90° out of phase with the voltage. Resistance is the opposition to current flow that tends to keep the current in phase with the voltage. If a circuit has both reactance and resistance, the former will tend to shift the current 90° and the latter will tend to keep the voltage and current in phase. The result will be a compromise in which the current is less than 90° out of phase with the voltage. The higher the resistance and the lower the reactance, the lower the phase shift.

When a series or parallel circuit is at resonance, the line current is in phase with the line voltage. That being so, the *reactance* of a series or parallel circuit at resonance is *zero*. For if the circuit had any reactance, the current would lead or lag the voltage. This leads to the important conclusion that while the *impedance* of a parallel resonant circuit is very high, its reactance is zero. In other words, a parallel circuit at resonance acts like

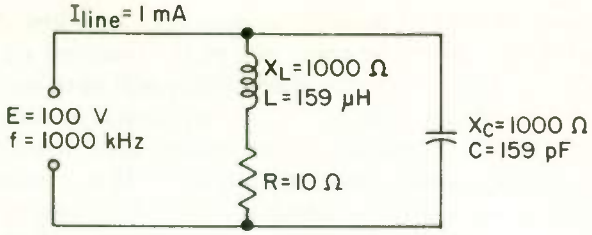

Fig. 34 ***L*** **and** ***R*** **in parallel with C.**

a very high value of resistance to the voltage across it, although the resistance of the coil taken alone is very low.

22 POWER IN *LCR* CIRCUITS... In calculating power in *LCR* circuits, whether at resonance or otherwise, keep in mind that only resistances use power. If the voltage across a capacitor or an inductor is 20 V and current through the unit is 3 A, the power used is 0 W, assuming perfect inductors and capacitors. Since all coils have some resistance, any practical inductor will use some power. However, a practical inductor is represented in schematic diagrams by a perfect inductor with a resistor connected in series to represent the resistance of the inductor. In Fig. 34, for example, the 10 Ω of *R* is the resistance of the coil. All the power used is dissipated in *R*. Since *R* is in fact part of the coil, the power would actually be dissipated within the coil. To find the power drawn by the parallel resonant circuit of Fig. 34, you can use the formula $P = E \times I \times pf$. Since this circuit is at resonance, the power factor is 1, so that $P = 100 \times 0.001 \times 1 = 0.1$ W. Since the only resistance in the circuit is *R*, the entire 0.1 W is dissipated in *R*.

WHAT HAVE YOU LEARNED?

1. Use the formula $P = I^2R$ to show that the power dissipated in *R* of Fig. 34 is 0.1 W.

2. Use two different formulas to find the power dissipated in *R* in Fig. 35.

ANSWERS

1. The current through *R* must first be found. $I_R = \frac{E}{X_L} = \frac{100}{1000} = 0.1$ A. *R* is so small compared to X_L that it is ignored in computing I_R. $P = I^2R = 0.1^2 \times 10 = 0.1$ W.

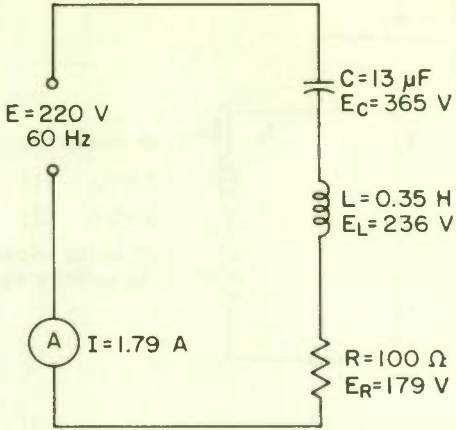

Fig. 35

2. 320 W . . . $P = I^2R = 1.79^2 \times 100 = 320$ W

$$P = \frac{E^2}{R} = \frac{179^2}{100} = 320 \text{ W}$$

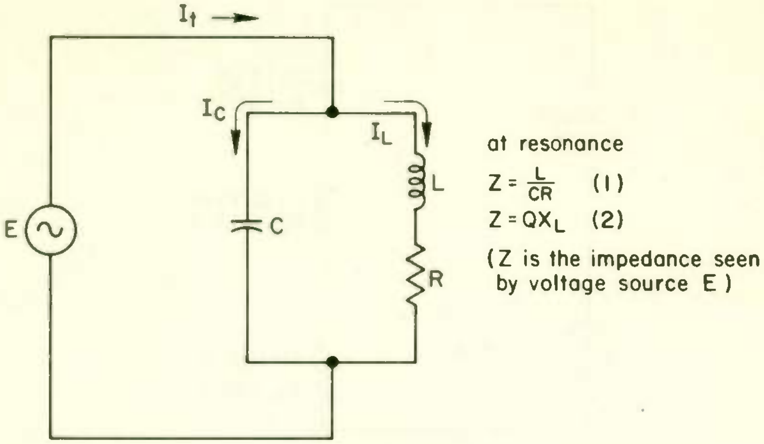

Fig. 36 Formulas for finding impedance at resonance in a parallel *LC* circuit.

APPENDIX I

23 DERIVATION OF FORMULAS FOR IMPEDANCE AT PARALLEL RESONANCE*

. . . To derive formulas (1) and (2) we make use of the fact that the power delivered by the voltage source E must equal the power used by R, since neither L nor C can consume power. At resonance we can assume that I_t is in phase with E, so that the power delivered by E is given by $P = E \times I_t$. The power in R is given by $P = I_L^2 R$.

$$E \times I_t = I_L^2 R$$

Since $I_L = \frac{E}{X_L}$,

$$E \times I_t = \frac{E^2}{X_L^2} R$$

Dividing both sides by E,

$$I_t = \frac{ER}{X_L^2}$$

Solving for E,

$$E = \frac{X_L^2 I_t}{R}$$

---

* You are not required to study this appendix.

$$Z = \frac{E}{I_t} = \frac{X_L{}^2}{R} = \frac{X_L}{R} X_L$$

Since $\frac{X_L}{R} = Q$,

$$Z = QX_L \qquad \text{Formula (2)}$$

From the above and since $X_L = X_C$,

$$Z = \frac{X_L{}^2}{R} = \frac{X_L}{R} \times X_C$$

Substituting $X_L = 2\pi fL$ and $X_C = \frac{1}{2\pi fC}$,

$$Z = \frac{2\pi fL}{R} \times \frac{1}{2\pi fC} = \frac{L}{CR} \qquad \text{Formula (1)}$$

LESSON 2316-1

RESONANT CIRCUITS

EXAMINATION

Circle the number of the correct answer for each question that follows. When you are finished, transfer the answers to the answer sheet by putting X's in the proper squares. When the graded answer sheet is returned to you, correct in this book any questions you may have missed. By doing so, you will have a record of the correct answers to all questions for review purposes.

1. The resonant frequency of a circuit will remain constant if we
   (1) keep the ratio of L to C constant.
   (2) increase C.
   (3) decrease either L or C.
   (4) keep the product of L and C constant.

2. The impedance across the terminals of a parallel resonant circuit is
   (1) very low. (3) always zero.
   (2) very high. (4) always infinite.

3. The impedance of resonant circuits at frequencies off resonance is
   (1) low for parallel circuits and high for series circuits.
   (2) high for parallel circuits and low for series circuits.
   (3) low for both series and parallel circuits.
   (4) high for both series and parallel circuits.

4. The formula for determining the resonant frequency of a circuit when the inductance and the capacitance are known is
   (1) $f_0 = \frac{1}{2\pi LC}$ (3) $f_0 = 2\pi X_C$
   (2) $f_0 = 2\pi X_L$ (4) $f_0 = \frac{1}{2\pi\sqrt{LC}}$

5. If a small amount of resistance is added in the capacitive branch of a parallel resonant circuit, the impedance of the circuit will
   (1) decrease.
   (2) increase.
   (3) remain the same.
   (4) increase in the inductive branch while decreasing in the capacitive branch.

6. The voltage drop across a parallel tuned circuit fed by a current source will be at a maximum when
   (1) the circuit is tuned to resonance.
   (2) the circuit is tuned above resonance.
   (3) the circuit is tuned below resonance.
   (4) the resistance equals the inductive reactance.

7. The reactance across the terminals of a parallel resonant circuit is
   (1) 0 Ω. (3) indeterminate.
   (2) infinity. (4) dependent upon the circuit Q.

8. The total reactance in a series circuit at resonance is
   (1) 0 Ω. (3) dependent upon the circuit Q.
   (2) infinity. (4) equal to the resistance.

9. In RLC circuits, resonance occurs when
   (1) X_L is larger than X_C.
   (2) X_L is smaller than X_C.
   (3) X_L equals X_C.
   (4) the current leads the voltage by 90°.

10. In a series RLC circuit, across a voltage source, at the resonant frequency the

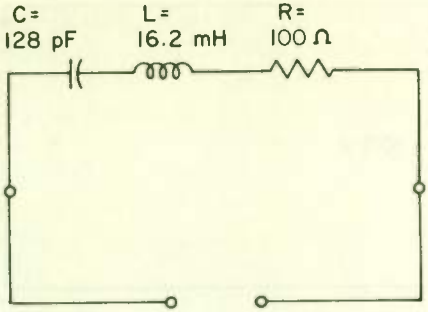

Fig. 37

(1) current is minimum.
(2) voltage across C is minimum.
(3) voltage across L is minimum.
(4) current is maximum.

11. A series LC circuit is resonant at 1000 kHz. If C is replaced by a capacitor 4 times as large, but L is not changed, what will be the resonant frequency?
(1) 250 kHz (3) 1000 kHz (5) 4000 kHz
(2) 500 kHz (4) 2000 kHz
(6) Cannot be determined without more information
(7) None of the above

12. To increase the resonant frequency of a circuit, you would
(1) make L larger and C smaller.
(2) make C larger and L smaller.
(3) make C or L or both larger.
(4) make C or L or both smaller.

13. What is the resonant frequency of the circuit of Fig. 37?
(1) 7690 Hz (2) 110.6 kHz (3) 3.58 MHz (4) 76.7 MHz
(5) None of the above

14. What is the impedance at resonance of the circuit of Fig. 37?
(1) Much less than 100 Ω
(2) 100 Ω
(3) Much over 100 Ω

15. Refer to Fig. 8. Assume the circuit is tuned to resonance and the induced voltage from the antenna is 0.1 mV. If the r-f resistance of the tuned circuit is 15 Ω and $X_C = X_L = 900\ \Omega$, what is the voltage applied to the grid of the tube?

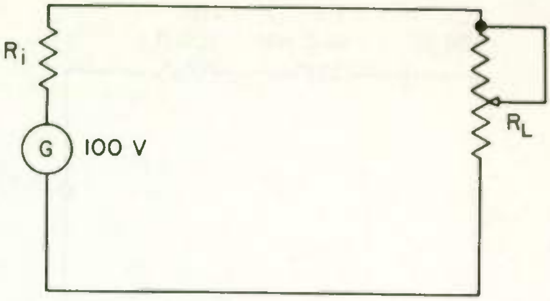

Fig. 38

(1) 60 mV
(2) 6 mV
(3) 6 V
(4) 90 mV
(5) 0.9 V
(6) 9 mV

16. If a frequency of 100 kHz is passed through two doublers, a tripler, and then another doubler, the output frequency will be
(1) 600 kHz (2) 900 kHz (3) 1200 kHz (4) 2400 kHz

17. Refer to Fig. 38. The generator *G* supplies a constant 100 V. If the internal impedance R_i is 100,000 Ω and the load R_L varies between 1500 and 2500 Ω, the generator is a
(1) constant-voltage source.
(2) constant-current source.
(3) neither of the above because both the voltage and the current vary greatly.

18. Refer to Fig. 38. If R_i is 15 Ω and R_L varies between 85 and 90 kΩ, the generator is a
(1) constant-current source.
(2) constant-voltage source.
(3) neither of the above because both the voltage and current vary greatly.

19. If a load is reflected back into a parallel resonant tank, the *Q* of the tank will
(1) decrease. (2) increase. (3) remain the same.

20. If a constant 150 V at 30 kHz is applied to a series resonant circuit whose r-f resistance is 6 Ω and $X_L = X_C = 3000$ Ω, what is the power dissipated by the circuit?
(1) 3750 W
(2) 0.015 W
(3) 7.5 W
(4) 75 W
(5) 0.15 W
(6) 375 W

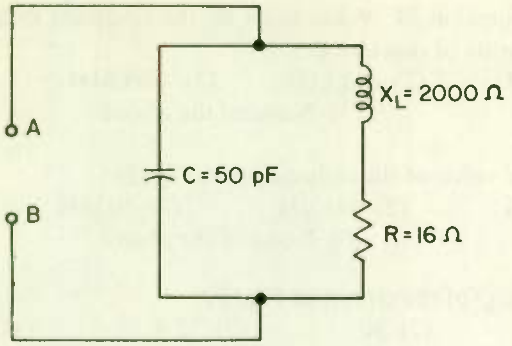

Fig. 39

21. If you wanted to receive a band of frequencies, with the exception of 590 kHz, you could
    (1) use a parallel tank tuned to 590 kHz in series with the receiver input terminals and a series *LC* circuit tuned to 590 kHz across the input terminals.
    (2) Same as (1) except tune the parallel tank well below 590 kHz.
    (3) Same as (1) except reverse the positions of the two tuned circuits.
    (4) Same as (1) except tune the series circuit to above 590 kHz.

22. When a pentode tube is used as a voltage amplifier, the impedance of the load should be as high as practical in order to obtain good gain from the stage. Which of the following circuits would you use to get the best gain?
    (1) Parallel resonant circuit with high *Q*
    (2) Parallel resonant circuit with low *Q*
    (3) Series resonant circuit with high *Q*
    (4) Series resonant circuit with low *Q*

23. Refer to Question 22. If you were able to reduce the ohmic resistance of the inductance (perhaps by rewinding with larger wire), how would the load impedance be affected?
    (1) It would increase.
    (2) It would decrease.
    (3) There would be no change.

24. The circuit of Fig. 39 is at resonance. Therefore, the reactance of the capacitor is
    (1) 0 Ω. (3) 50 Ω. (5) 2000 Ω.
    (2) 16 Ω. (4) 500 Ω.
    (6) Can't be determined without more information.
    (7) None of the above.

25. Refer to Question 24. What must be the resonant frequency for *C* to have this value of reactance?
   (1) 160 kHz (2) 442 kHz (3) 1.59 MHz (4) 2.61 MHz
   (5) None of the above

26. What is the value of the inductance in Fig. 39?
   (1) 200 μH (2) 641 μH (3) 50 mH (4) 140 mH
   (5) None of the above

27. What is the *Q* of the circuit of Fig. 39?
   (1) 12.3 (2) 50 (3) 72.4 (4) 125

28. Refer to Fig. 39. What is the total impedance as measured at input terminals *AB*?
   (1) 8 Ω (2) 16 Ω (3) 250,000 Ω (4) 2,400,000 Ω
   (5) None of the above

29. If in Fig. 39 the line current is a constant 2 mA, what must be the voltage applied across terminals *AB*?
   (1) 2 mV (2) 20 V (3) 500 V (4) 4800 V
   (5) None of the above

30. What is the circulating current of the resonant tank of Fig. 39?
   (1) 2 mA (3) 0.025 A (5) 0.020 A
   (2) 3.125 A (4) 31.25 A (6) 250 mA

31. What is the bandwidth of the circuit of Fig. 39, assuming the line current stays a constant 2 mA?
   (1) 6.3 kHz (2) 12.7 kHz (3) 50.8 kHz (4) 76.3 kHz
   (5) None of the above

32. What is the bandwidth of the response curve of Fig. 40? HINT: Note that response is given in milliwatts.
   (1) 35 kHz (3) 90 kHz (5) 240 kHz
   (2) 60 kHz (4) 120 kHz

33. Assume you have a constant 500-μA line current to a parallel tank at resonance whose component values are $C = 25$ pF and $L = 100$ μH. If the r-f resistance of the tank is 40 Ω, what is the power dissipated in the tank?
   (1) 25 mW (2) 25 W (3) 1 W (4) 10 W
   (5) Information insufficient to find the power
   (6) None of the above

END OF EXAM

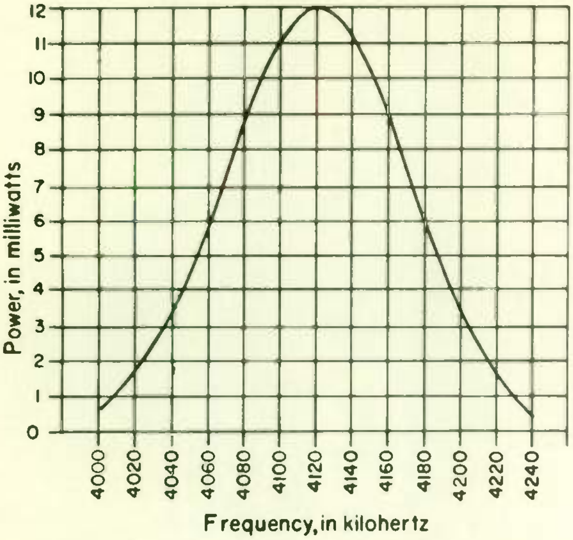
Power, in milliwatts
0
1
2
3
4
5
6
7
8
9
10
11
12
4000
4020
4040
4060
4080
4100
4120
4140
4160
4180
4200
4220
4240
Frequency, in kilohertz

Fig. 40


CLEVELAND INSTITUTE OF ELECTRONICS

CLEVELAND INSTITUTE OF ELECTRONICS / CLEVELAND, OHIO

electronics

CLEVELAND INSTITUTE OF ELECTRONICS / CLEVELAND, OHIO

Using Curves and Phasors

2104-1

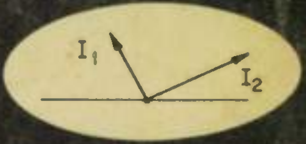

An AUTO-PROGRAMMED Lesson

ABOUT THE AUTHOR

Through nearly 20 years experience in helping students learn through home study, Mr. Geiger has obtained an intimate understanding of the problems facing home-study students. He has used this knowledge to make many improvements in our teaching methods. Mr. Geiger believes that students learn fastest when they actively participate in the lesson, rather than just reading it.

Mr. Geiger edits much of our new lesson material, polishing up the manuscripts we receive from subject-matter experts so that they are easily readable, contain only training useful to the student in practical work, and are written so as to teach, rather than merely presenting information.

Mr. Geiger's book, *Successful Preparation for FCC License Examinations* (published by Prentice-Hall), was chosen by the American Institute of Graphic Arts as one of the outstanding textbooks of the year.

This is an AUTO-PROGRAMMED Lesson exclusive with the Cleveland Institute of Electronics. It is your assurance of the finest in technical education and training.

Accredited by the Accrediting Commission of the National Home Study Council

The Accrediting Commission has been approved by the U.S. Office of Education as a "nationally recognized accrediting agency".

CLEVELAND INSTITUTE OF ELECTRONICS

Using Curves and Phasors

By DARRELL L. GEIGER
Senior Project Director
Cleveland Institute of Electronics

2104-1

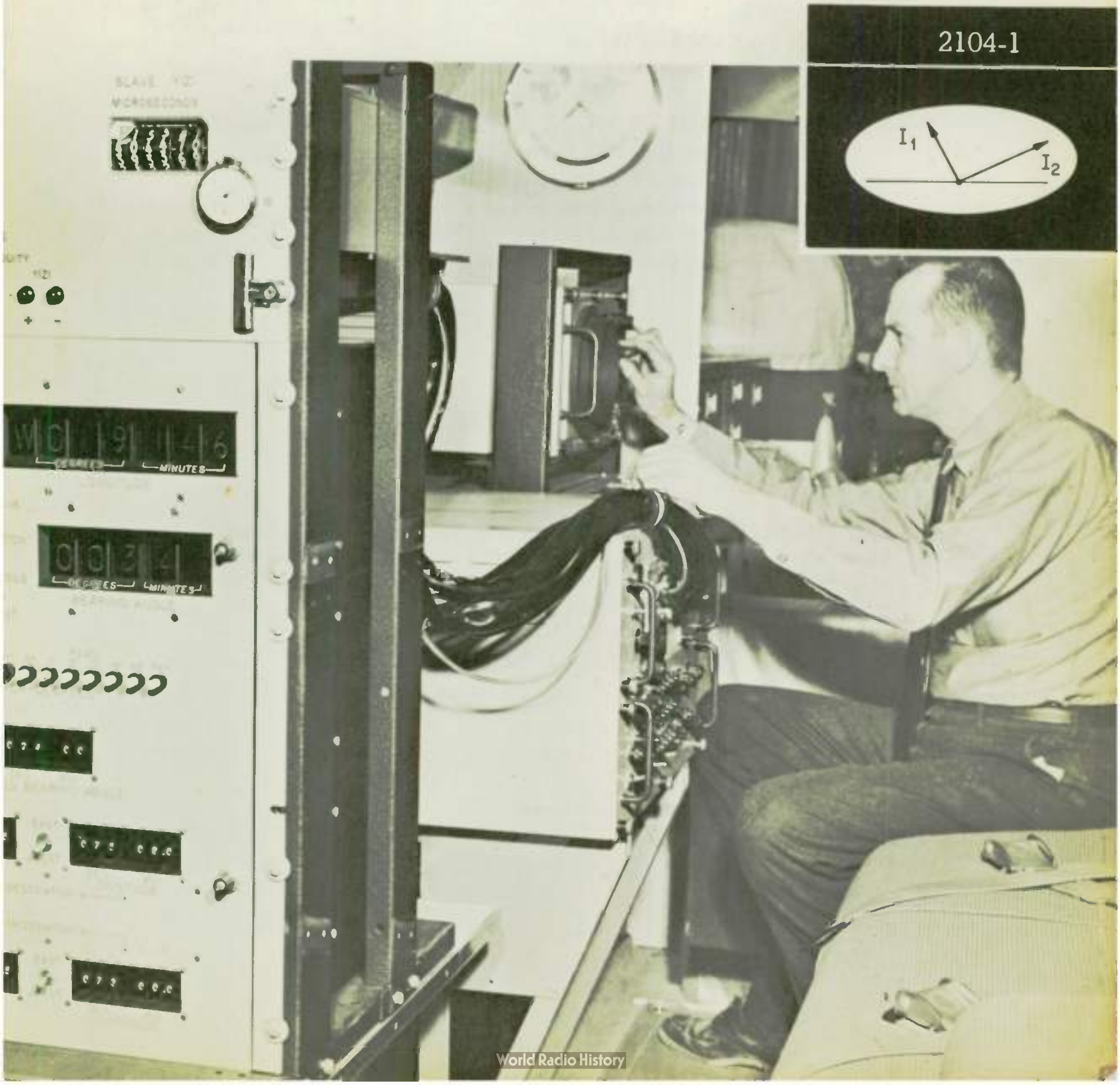

In this lesson you will learn...

FRONTISPIECE: This Hyperbolic Coordinate Converter, developed by Lear Siegler's Instrument Division, converts Loran signals from aircraft into latitude and longitude readings, and gives distance to go and directional information automatically.

FIRST EDITION/Second Printing/November, 1967.

2104-1

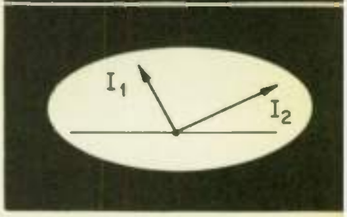

A chat with your instructor

Three subjects are covered in this lesson: how to read curves and graphs used in electronics, how alternating currents and voltages are represented by phasors, and how to change a given formula into a different form more useful for your purpose. In lessons to come you will find that these three handy electronics tools will make your study a lot easier and enable you to learn more in the time you spend.

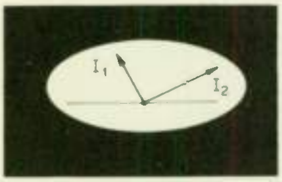

Using Curves and Phasors

READING AND USING GRAPHS

Graphs and charts—engineers and technicians generally call them curves—are widely used in electronics for pictorially showing the performance to be expected from circuits and components.

1 HOW TO READ AND PLOT A CURVE . . . Dick made the graph of Fig. 1 so that he can quickly tell what the power input to his antenna is for any reading of the antenna r-f ammeter. For example, if the antenna ammeter reads 1.7 A, Dick moves a pencil point vertically up from 1.7 on the base line of the graph until he comes to the curve. Then he moves his pencil point horizontally to the left edge of the graph, where he reads approximately 125. The dashed lines show the path of Dick's pencil. Thus the graph shows that, when the antenna current is 1.7 A, the power to the antenna is approximately 125 W.

To make the graph, Dick used the formula $P = I^2R$ to calculate the power for several different current values, using 43 Ω (the antenna resistance) for R. Thus, for 0.5 A, $P = I^2R = 0.5^2 \times 43 = 10.75$ W. Dick put his calculations in the form of a table like this:

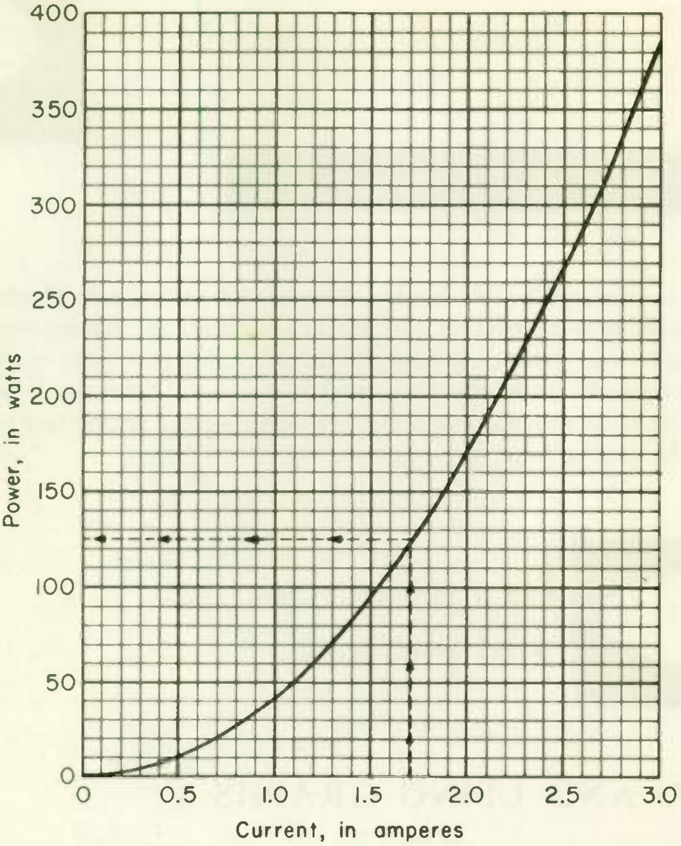

Fig. 1 Curve showing variation of power with current in an antenna with 43 Ω resistance.

Current, A	Power, W
0	0
0.5	10.75
1.0	43
1.5	96.75
2.0	172
2.5	268.8
3.0	387

Dick next plotted the information in his table as points on a graph, as shown in Fig. 2, one point for each current-power pair. For example, his table shows that for a current of 2.0 A the power is 172 W, so Dick plotted a point where a vertical line up from 2 A meets a horizontal line from

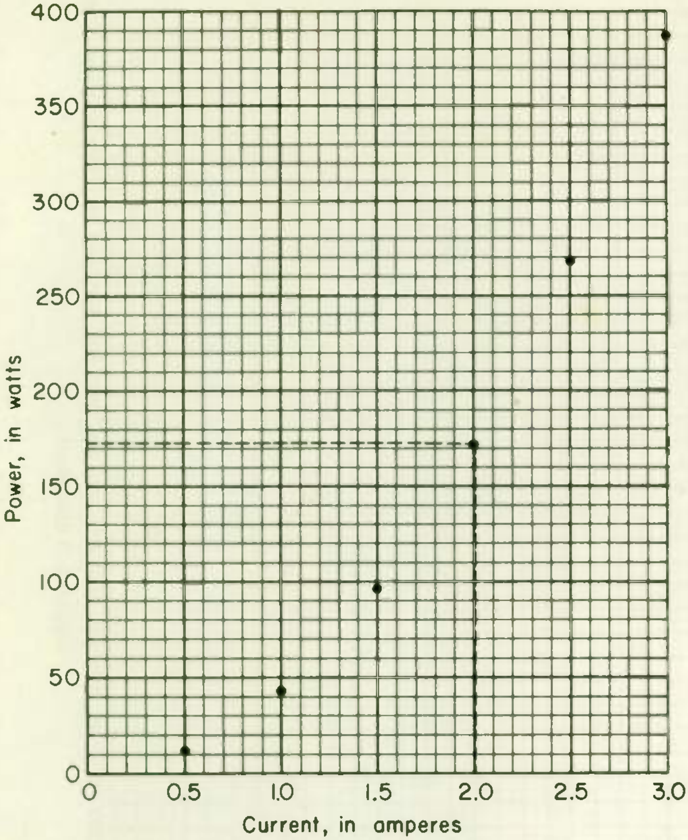

Fig. 2 **Plotting points for making the graph of Fig. 1.**

172 W. The dashed lines in Fig. 2 show how the proper position for this point was located. After Dick plotted all the points for his table, he drew a smooth curve through them. He then had his graph completed, as in Fig. 1.

WHAT HAVE YOU LEARNED?

1. Use the graph of Fig. 1 to complete the following table:

Current, A	Power, W
0.8	(a) ______
1.3	(b) ______
2.3	(c) ______
(d) ______	25
(e) ______	90
(f) ______	300

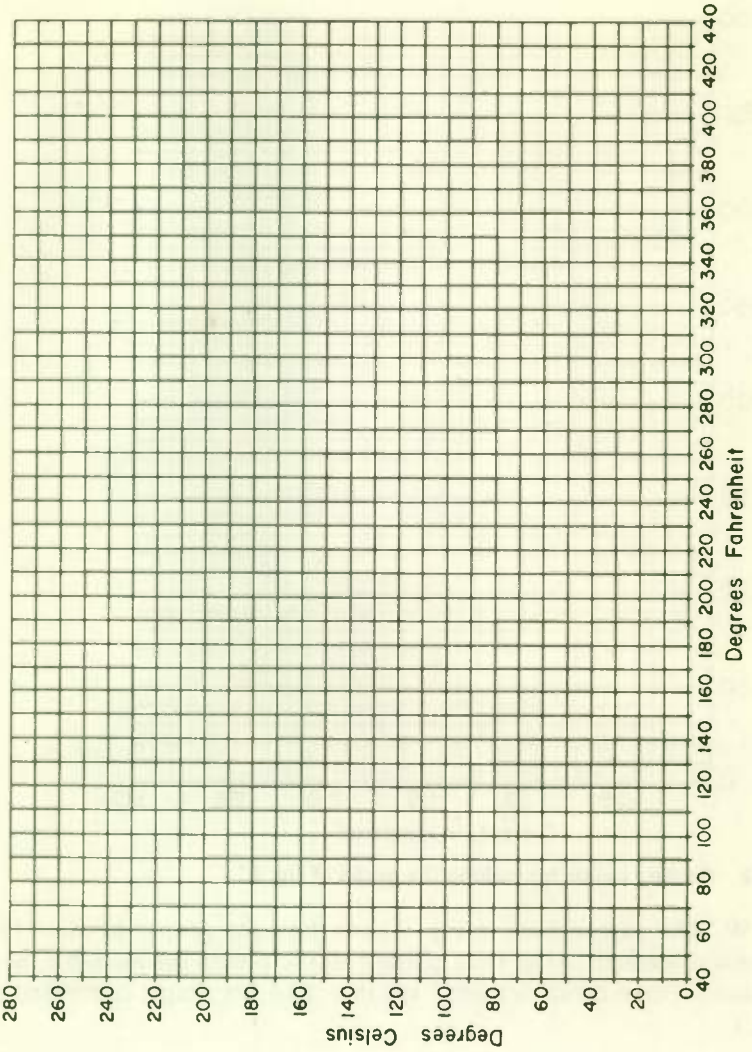

Fig. 3

2. Use the formula $^\circ C = \frac{5}{9}(^\circ F - 32)$ to complete the following table and plot the graph on Fig. 3.

Fahrenheit, °F	Celsius (Centigrade), °C	Fahrenheit, °F	Celsius (Centigrade), °C
41	(a) ________	230	(f) ________
50	(b) ________	275	(g) ________
68	(c) ________	320	(h) ________
86	(d) ________	410	(i) ________
140	(e) ________		

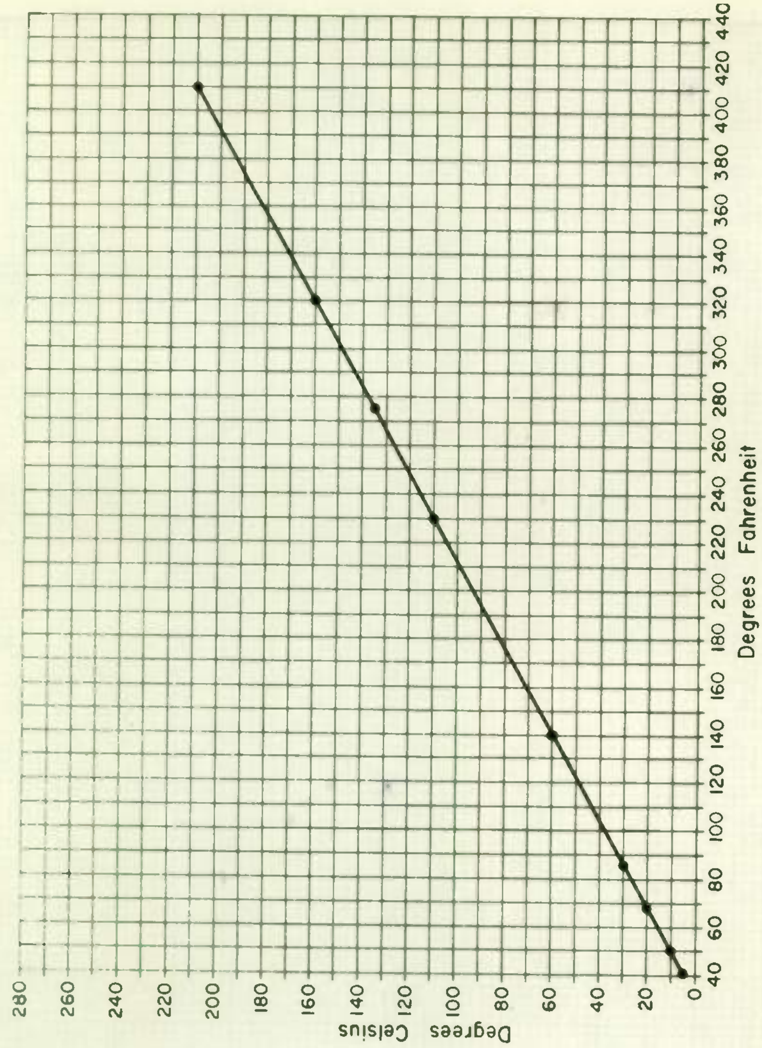

Fig. 4

3. Use the graph of Fig. 4 to complete the following table:

°F	°C
(a) ______	40
240	(b) ______
(c) ______	130
360	(d) ______

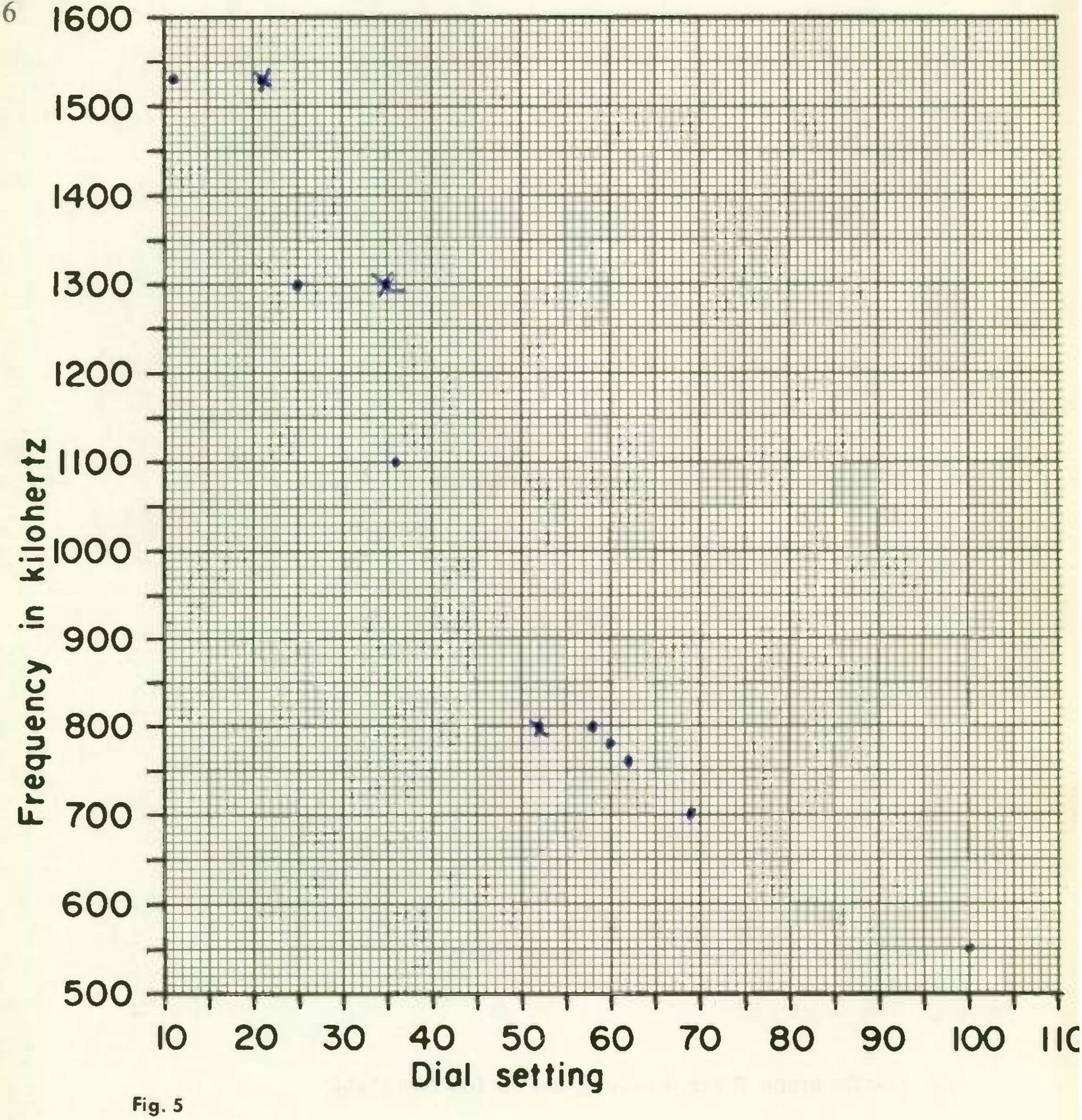

Fig. 5

4. A radio engineer, while making a field-strength survey of radio signals in a city, discovered that he had forgotten the manual of instructions for his field-strength meter. He noticed that the dial on the set was calibrated in units from 0 to 110. By listening to a number of stations and noting the

dial settings, he plotted the dial settings against the frequencies of these stations and drew a curve. Then he was able to select any frequency and any dial setting he needed. If the stations and dial settings were as follows, plot, as he did, the curve on the graph paper in Fig. 5.

100	WKRC	550 kHz	60	WBBM	780 kHz	11	WCKY	1530 kHz
36	WKYC	1100 kHz	62	WJR	760 kHz	25	WOOD	1300 kHz
69	WLW	700 kHz	58	CKLW	800 kHz			

5. The next day the radio engineer of Problem 4 obtained readings at dial settings of (a) 90, (b) 30, (c) 20, (d) 73, (e) 92, (f) 18, (g) 49. What frequencies correspond to these dial settings? Use Fig. 6.

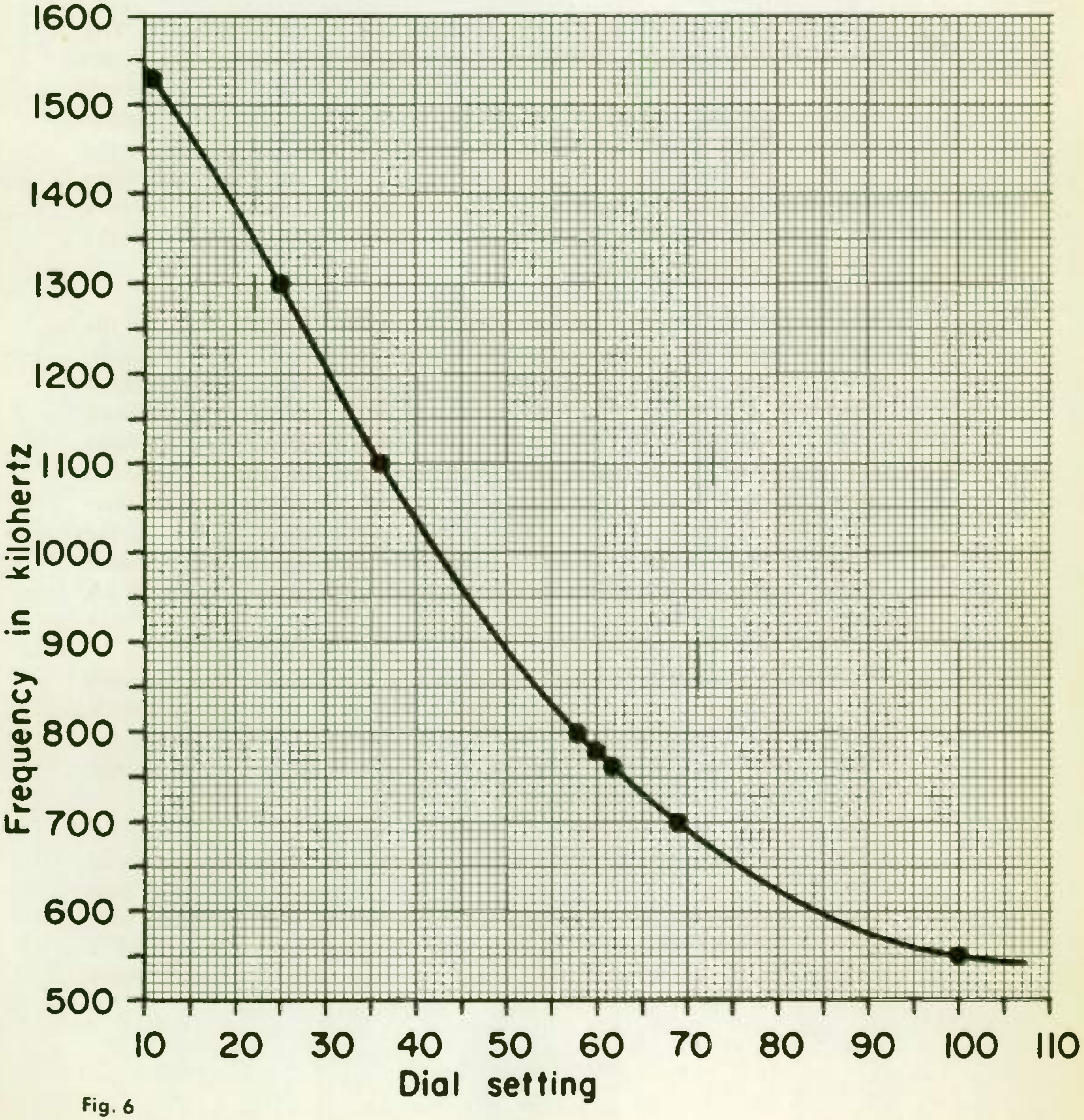

Fig. 6

ANSWERS

1. (a) 27.5 W; (b) 72.7 W; (c) 227 W; (d) 0.76 A; (e) 1.45 A; (f) 2.64 A. The values you read may be slightly different from our answers because of the difficulty of reading a graph accurately, but for practical purposes they should be close enough.
2. (a) 5; (b) 10; (c) 20; (d) 30; (e) 60; (f) 110; (g) 135; (h) 160; (i) 210; see Fig. 4.
3. (a) 104°F; (b) 116°C; (c) 266°F; (d) 182°C
4. See Fig. 6.
5. (a) 575 kHz; (b) 1205 kHz; (c) 1385 kHz; (d) 670 kHz; (e) 570 kHz; (f) 1420 kHz; (g) 905 kHz

2 PLOTTING A CURVE FROM LABORATORY VALUES . . . The information needed for plotting most graphs used in electronics is obtained from laboratory measurements. Suppose we want to plot a graph showing how the amount of leakage (reverse) current through a certain diode is affected by the amplitude of the reverse bias voltage across the diode. We can get the information we need to plot the graph by means of the circuit in Fig. 7. By reading the ammeter at every 50 V as we vary the reverse voltage from 50 to 550 V, we obtain the table shown to the right of the circuit drawing.

Now to plot the points. On examining the table we note that for the higher voltages the leakage current increases very rapidly. For example, the table shows that increasing the reverse voltage from 450 to 500 V doubles the leakage current. If we want to show clearly on our graph both the relatively small leakage currents at low reverse voltages and the huge leakage currents at the higher reverse voltages, we need to use a special graph scale that is compressed at the upper end. Such a scale is the vertical scale of Fig. 8, and it is called a *logarithmic scale*. Note that the bottom one inch of the scale covers a current range of only 9 μA (from 1 to 10μA), whereas the top one inch of the scale covers a range of 9000 μA (from 1000 to 10,000 μA).

The horizontal scale for voltage values in Fig. 8 is a *linear scale* because the values change at an even rate (each half inch represents a 100-V change). Scales used for graphs in electronics, with a few exceptions, are either logarithmic or linear. The graph of Fig. 8 is called a semilogarithmic graph because it has one logarithmic scale and one linear scale.

Figure 8 shows the plotted points for the table of Fig. 7. In this particular case we find that we can't draw a smooth flowing curve that will pass through every point. So we draw a curve, as shown, that comes as near as we can to the points and still be a smooth curve. When you draw a curve, never snake it around into a wiggly line to go exactly through every

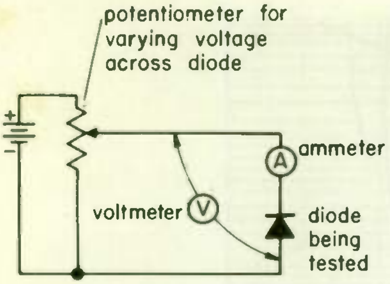

(a)

Volts	Current, μA
50	1.0
100	3.0
150	3.5
200	7.2
250	17
300	35
350	63
400	80
450	300
500	600
550	10,000

(b)

Fig. 7 (a) Circuit for measuring diode leakage current and (b) values obtained.

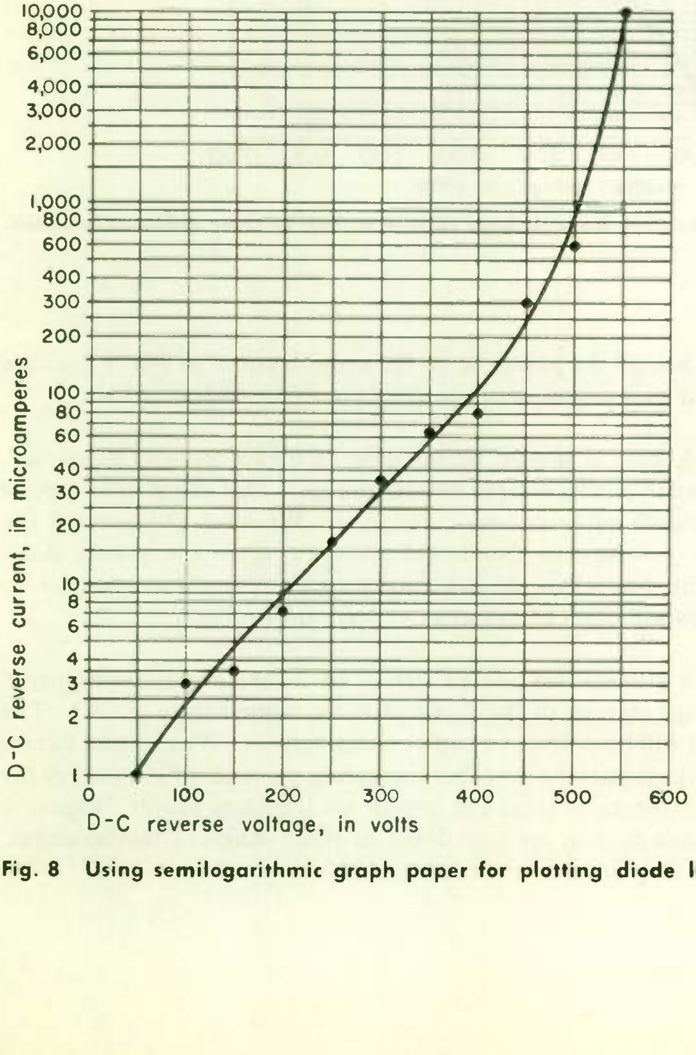

Fig. 8 Using semilogarithmic graph paper for plotting diode leakage current.

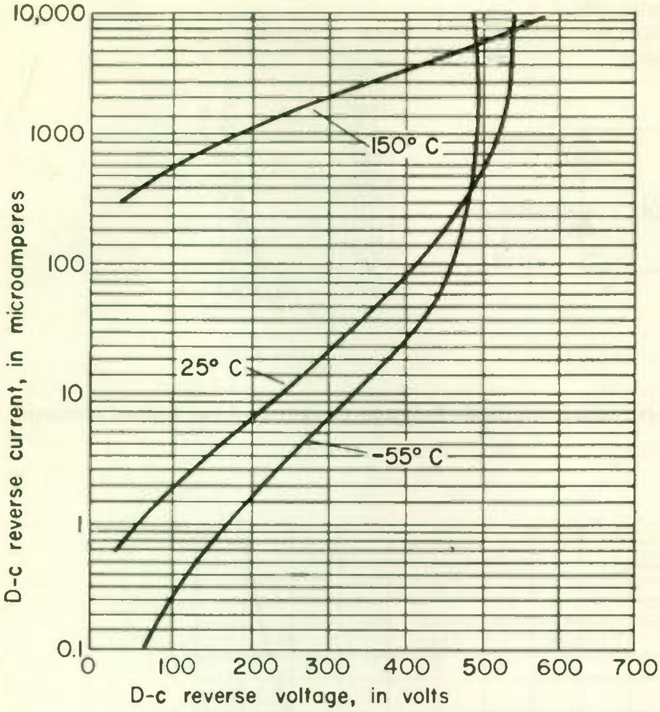

Fig. 9 **Curves showing diode leakage reverse current at three different temperatures.**

plotted point. Not all the points lie on the smooth curve in Fig. 8 because of meter inaccuracies and errors in reading the meter scales.

With reasonable care it should be possible to make measurements sufficiently accurate in such a simple circuit as Fig. 7 that the plotted points will lie on a smooth curve or very close to it. We have exaggerated the errors to show you how to handle the situation when the points don't smooth up right, but when the laboratory measurements are harder to make, the errors will often be about as we have shown them.

It is practical to plot several related curves on a single graph. Figure 8 shows the leakage current of the diode at room temperature (25°C). The leakage current will be different at other temperatures. We can plot curves showing the leakage current for other temperatures, and all the curves for the different temperatures used can appear on the same graph. Figure 9 shows the leakage current for our diode at three different temperatures, 25, 55, and 150°C, plotted on the same graph.

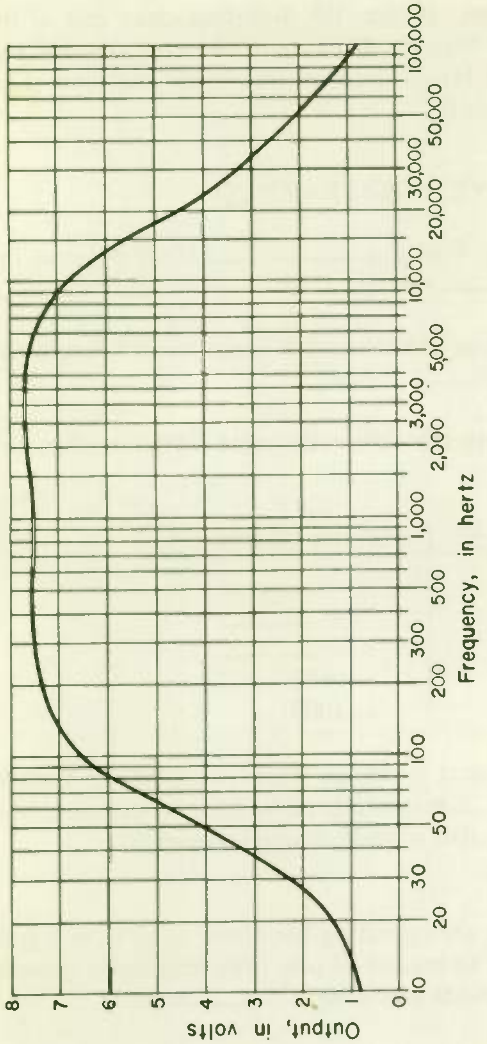

Fig. 10 Frequency response in a typical *RC*-coupled amplifier.

Figure 10, which shows the frequency response of an amplifier, is another example of a curve plotted on semilogarithmic graph paper. At low audio frequencies a change in frequency of only a few hertz will cause a noticeable change in the amplifier output voltage. The logarithmic scale used expands the low-frequency part of the graph so that the change in output voltage with a small change in frequency can be read clearly. Thus the graph shows that increasing the frequency from 30 to 50 Hz (a change of 20 Hz) increases the output voltage from 2.3 to 4 V. At high audio frequencies a frequency change of 20 Hz is not enough to have any noticeable effect on the output voltage. Hence, the high-frequency end of the scale can be compressed, as in Fig. 10. Because of the compression you can't read a change of only 20 Hz at the high-frequency end, and there would be no advantage if you could.

WHAT HAVE YOU LEARNED?

1. The horizontal scale of Fig. 8 is a (a) ________ scale because the values change at an (b) ________ rate.

2. The vertical scale of Fig. 8 (a) (*is*) (*is not*) a linear scale because the values change at an (b) ________ rate.

3. Refer to Fig. 8 and complete the following table. (Remember, the vertical scale is not linear.)

Reverse voltage, V	Reverse current, μA
70	(a) ______
120	(b) ______
325	(c) ______
(d) ______	500
(e) ______	4000

4. Refer to Problem #3. Note that a change from 70 to 120 V, a 50-V increase, causes only a (a) ______ microampere increase in current, but an increase from 480 to 530 V, also a 50-V change, causes a (b) ______ microampere increase in current.

5. Refer to Fig. 9. Assume you are operating the diode at 55°C and you do not want the reverse current to exceed 10 μA. The maximum reverse voltage you would apply to the diode would be (a) ______ volts.

6. Refer to Fig. 9. The portion of the 55°C curve corresponding to voltages in excess of 400 V d-c means the reverse current (a) (*increases rapidly*) (*stays nearly the same*) for a small increase in reverse voltage. You certainly wouldn't want to operate the diode with a reverse voltage over (b) ______ volts, and a considerably lower reverse voltage would be the maximum allowed in a practical circuit.

7. Refer to Fig. 10. The frequency scale is (a) (*linear*) (*nonlinear*) because the values of frequency increase at an (b) (*even*) (*uneven*) rate.

8. Refer to Fig. 10. The output voltage is (a) ______ volts at 50 Hz,

(b)_______ volts at 100 Hz, (c)_______ volts at 10 kHz, and (d)_______ volts at 15 kHz.

9. Refer to Problem 8. When the frequency changes from 50 to 100 Hz, the output voltage changes (a)_______ volts, but a change in frequency from 10 to 15 kHz changes the output voltage only (b)_______ volts.

10. The change of 50 Hz at the low-frequency end produces a (a) (*larger*) (*smaller*) change in output voltage than a change of 5000 Hz at the high-frequency end. The reason for this is that a change of 50 Hz is a relatively high percentage of the audio frequency at the (b) (*low*) (*high*) frequency end.

ANSWERS

1. (a) Linear; (b) even 2. (a) Is Not; (b) increasing
3. (a) 1.5 μA; (b) 3 μA; (c) 40 μA; (d) 480 V; (e) 530 V
4. (a) 1.5; (b) 3500 5. (a) 330
6. (a) Increases rapidly (b) 420 . . . Note that above 420 V the reverse current increases very rapidly.
7. (a) Nonlinear; (b) uneven 8. (a) 4; (b) 6.6; (c) 6.8; (d) 5.6
9. (a) 2.6; (b) 1.2 10. (a) Larger (b) Low . . . See Fig. 11.

Part of the signal voltage applied to the input terminals is lost across *C* owing to the reactance of *C*. The signal voltage amplified by the tube is the voltage that appears across *R*. The a-c impedance of E_{cc} is virtually zero, so the bottom of *R* is effectively connected to the cathode of *V*. The value of the voltage across *R* is the value of the voltage applied to the input terminals minus the voltage drop across *C* due to reactance X_C.

At the low frequencies, the value of X_C can be noticeably changed by a frequency change of 50 Hz, but not at the high-frequency end. Using the formula $X_C = \frac{1}{2\pi fC}$, a change of 50 Hz, from 50 to 100 Hz, causes X_C to be halved. (If *f*

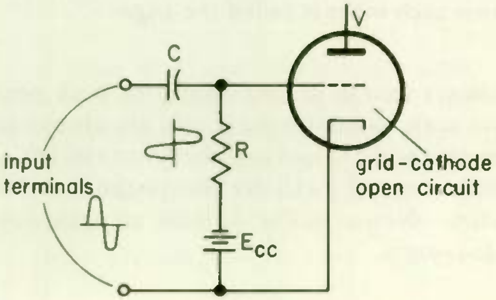

Fig. 11

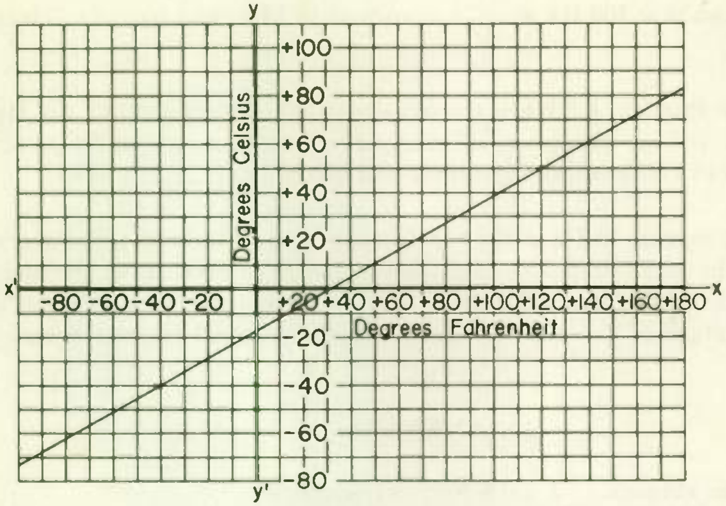

Fig. 12 Graph for converting between degrees Celsius and degrees Fahrenheit for both positive and negative temperatures.

doubles, X_C halves.) Thus the loss across C is halved and the voltage across R is increased by a value equal to $X_C/2$. Inspection of the formula $X_C = \frac{1}{2\pi fC}$ shows that a 50-Hz change from 10 to 10.05 kHz will not appreciably change the value of X_C, and thus the voltage across R will not be appreciably changed.

3 GRAPHS WITH NEGATIVE VALUES . . . Both positive and negative values are often involved in plotting or reading a graph. The trouble with the graph you plotted on Fig. 3 for converting between degrees Fahrenheit and degrees Celsius is that it will handle only positive temperature values. The graph of Fig. 12 handles both positive and negative temperature values. The horizontal and vertical reference coordinates $x'-x$ and $y'-y$ are usually called the x axis and the y axis, respectively. The point where the two axes cross each other is called the *origin*.

The origin is always zero in graphs displaying both positive and negative values. Positive scale values on the x axis are always to the right of the origin, and negative scale values are always to the left, as Fig. 12 shows. Positive scale values on the y axis are always above the origin and negative scale values below. Notice in Fig. 12 how all scale values increase with distance from the origin.

Sometimes a scale division has a different value on the negative side of the

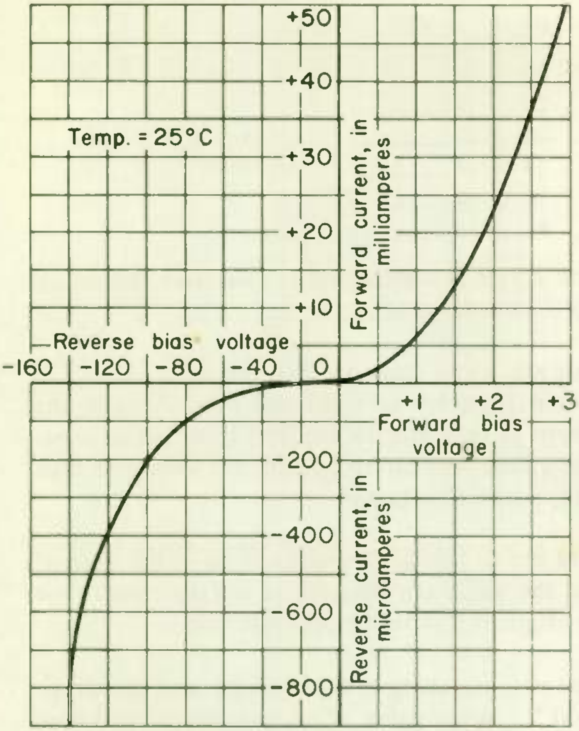

Fig. 13 Volt-ampere characteristic curve for the IN63 diode.

origin than it has on the positive side. For example, in Fig. 13, one block on the *y* axis scale above the origin represents 5 mA and one block on the *y* axis below the origin represents 100 μA. Similarly, one block on the *x* axis to the right of the origin represents 0.5 V and one block to the left of the origin represents 20 V. Note in Fig. 13 how a plus voltage means a voltage that forward-biases the diode and a negative voltage means one that reverse-biases the diode. Similarly, forward current through the diode is considered positive and leakage-current flow in the opposite direction is considered negative.

WHAT HAVE YOU LEARNED?

1. The scales of the graph in Fig. 12 (a) (*are*) (*are not*) linear because the values increase at an (b) __________ rate.

2. Use the graph of Fig. 12 to complete the following table:

°F	°C
−40	(a) ________
−22	(b) ________
−4	(c) ________
23	(d) ________
32	(e) ________
41	(f) ________

3. A value to the left of the y axis is considered (a) (*positive*) (*negative*), and a value below the x axis is considered (b) ____________.

4. The point where the x axis and y axis cross is called the (a) __________. As you move along the x axis from left to right and pass through the origin, the values change from (b) (*negative to positive*) (*positive to negative*). As you move along the y axis from top to bottom, the values change from (c) (*negative to positive*) (*positive to negative*).

5. The scales used in Fig. 13 are (a) (*linear*) (*nonlinear*) on either side of the (b) ____________, but the value per division is (c) (*the same*) (*not the same*) on one side of the origin as it is on the opposite side.

6. Refer to Fig. 13. Assume you are using a 1N63 diode and decide to apply a reverse voltage of 100 V. What value of reverse current will flow through the diode?

7. Refer to Fig. 13. Complete the following table. Remember, a negative value of current or voltage means reverse current or reverse voltage.

Voltage, V	Current, mA or μA
2	(a) ________ mA
1.25	(b) ________ mA
0.25	(c) ________ mA
−60.0	(d) ________ μA
(e) ________	−300 μA
(f) ________	−550 μA

ANSWERS

1. (a) Are; (b) even 2. (a) −40; (b) −30; (c) −20; (d) −5; (e) 0; (f) 5
3. (a) Negative (b) Negative . . . A value on the x axis to the left of the origin is always considered negative, and a value on the y axis below the origin is also considered negative.
4. (a) Origin; (b) negative to positive; (c) positive to negative
5. (a) Linear; (b) origin; (c) not the same 6. 200 μA
7. (a) 24 mA; (b) 10 mA; (c) 1 mA; (d) −50 μA; (e) −112 V; (f) −130 V

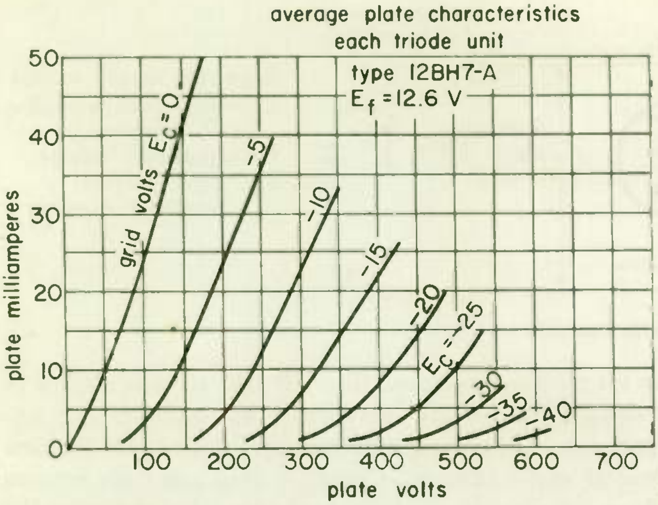

Fig. 14 An example of a family of tube curves.

4 TUBE CHARACTERISTIC CURVES . . . The three important d-c values associated with the operation of a tube are the plate voltage, the plate current, and the grid bias voltage. If any two of these three values are known, the third can be read from a graph displaying the characteristic curves for the particular tube type. An example of such curves is shown in Fig. 14. The family of curves shown are known as E_b-I_b curves because the horizontal and vertical scales give plate volts E_b and plate current I_b. It is necessary to have a different curve on the graph for each grid bias voltage value. Thus curves are shown in Fig. 14 for grid bias voltages E_c of 0 V, – 5 V, – 10 V, and on up to – 40 V.

EXAMPLE 1 . . . If the grid bias on a 12BH7-A type tube is –10 V, what is the plate current for a plate voltage of 300 V?

SOLUTION . . . Push your pencil vertically up from 300 on the horizontal plate volts scale, Fig. 14, until you reach the –10 curve. Then move the pencil point horizontally to the left until you intercept the vertical scale at 23 mA, which is what the plate current will be. If resistor *R* in Fig. 15 is adjusted until the voltmeter reads 300 V, then the ammeter will read 23 mA, since the tube is biased so that the grid is 10 V negative with respect to the cathode.

EXAMPLE 2 . . . If the grid bias is –7.5 V, what is the plate current for a plate voltage of 200 V?

SOLUTION . . . There is a curve in Fig. 14 for –5 grid volts and one for –10 V, but there is none for –7.5 V. However, 7.5 is halfway between 5 and 10. Hence, with a pencil draw a curve halfway between the –5 and the –10 curves. From this new curve read 12 mA as the approximate plate current for 200 V on the plate.

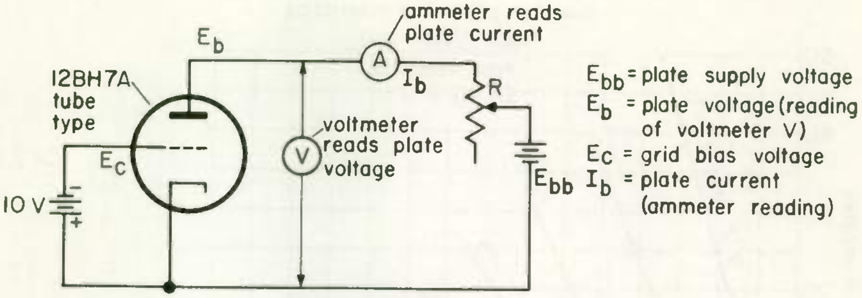

Fig. 15 Illustration for Example 1.

A laboratory setup for plotting the curve for −10 grid volts is shown in Fig. 15. As a start toward plotting the curve, read the voltmeter and ammeter and plot that point. Then change the value of *R* and plot the new readings of the ammeter and voltmeter. Continue until you have enough points plotted to draw the curve for −10 V grid bias. By changing the grid bias voltage, curves can be drawn similarly for other values of grid bias until a complete family of curves, as in Fig. 14, is obtained.

WHAT HAVE YOU LEARNED?

1. Refer to Fig. 14. Using a bias of −5 V, the value of I_b when E_b is 200 V is (a) ________ milliamperes. If E_b is changed to 140 V, the value of I_b is (b) ________ milliamperes.

2. Refer to Fig. 14. Assume you knew the tube was passing 15 mA and the grid bias was −15 V. The value of E_b would be ________ V.

3. Refer to Fig. 14. If the grid voltage E_c is −25 V and I_b is 5 mA, E_b is ________ V.

4. Refer to Fig. 14. If E_b is 300 V and I_b is 23 mA, the value of E_c is ________ V.

5. Refer to Fig. 14. When E_b is 225 V and I_b is 17.5 mA, the value of E_c is ________ V.

6. Refer to Fig. 14. Complete the following table.

E_b, V	I_b, mA	E_C, V
400	(a) ________	−20
125	(b) ________	−5
275	(c) ________	−12
(d) ________	30	−7.5
(e) ________	17	−17.5
175	17.5	(f) ________
225	18	(g) ________
325	20	(h) ________

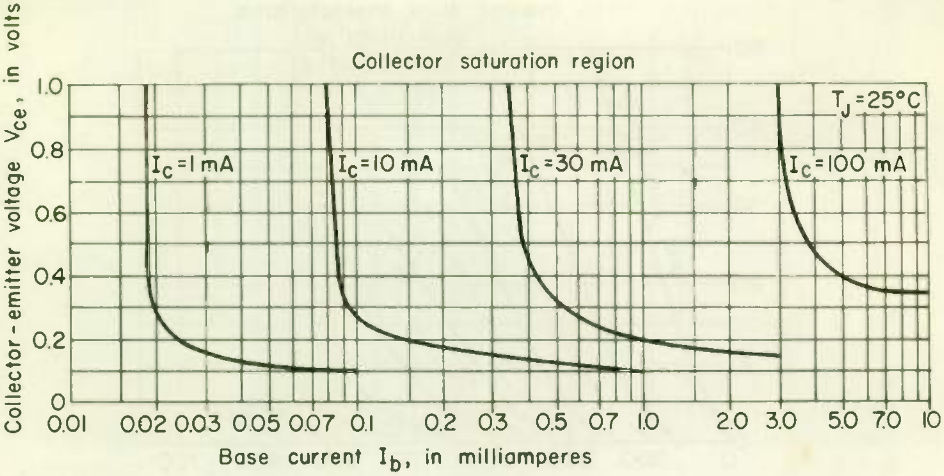

Fig. 16

Refer to Fig. 16. This graph shows the family of collector current curves for a transistor. It is not necessary for you to understand transistor action at this time. You will study transistors in great detail later in your lessons. What is important now is that you learn to read graphs correctly.

7. If the value of V_{ce} is 0.6 V and the value of I_c is 1 mA, the value of I_b is ______ milliamperes.

8. When V_{ce} is 0.5 V and I_c is 10 mA, the value of I_b is ______ milliamperes.

9. When I_b is 3.0 mA and I_c is 30 mA, the value of V_{ce} is ______ volts.

10. If I_b is 0.35 mA and V_{ce} is 0.15 V, the value of I_c is ______ milliamperes.

11. If I_b is 7.5 mA and V_{ce} is 0.35 V, the value of I_c is ______ milliamperes.

ANSWERS

1. (a) 24 . . . See Fig. 17. Place a pencil on the x axis at the 200-V line and then follow the line upward until the pencil reaches the −5-V curve. Draw a line straight to the left to the y axis, and note that the line intersects the y axis between 20 and 25 mA. By interpolation, read 24 mA. (b) 10.
2. 355 . . . Here we reverse the procedure used in Problem 1. Place a pencil on

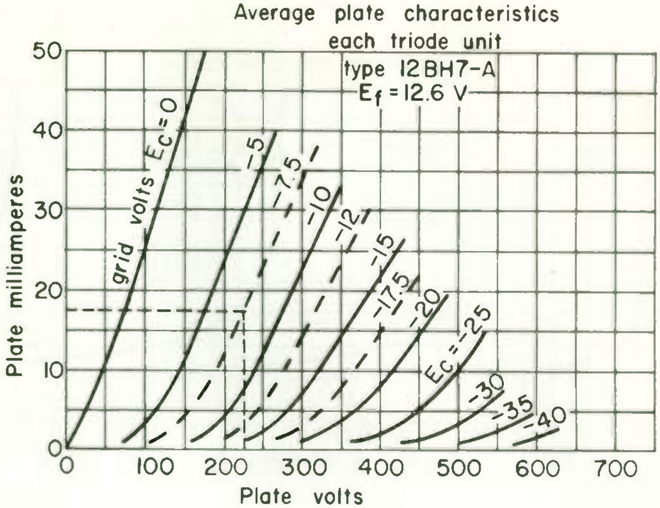

Fig. 17

the y axis at 15 mA. Follow the line to the right till you intersect the −15-V grid voltage curve, and then draw a line straight down till it intersects the x axis and read 355 V.

3. 450   4. −10 . . . Here we must draw two lines, one from each axis. Place your pencil on the x axis at 300 V and draw a line parallel to the y axis. Then place your pencil on the y axis at 23 mA and draw a line parallel to the x axis. The point where your two lines intersect is the value of the grid voltage.

5. −7.5 . . . Refer to Fig. 17. Follow the dashed lines that represent the values of plate voltage and current. Notice that they intersect halfway between the grid voltage curves of −5 and −10 V. A curve drawn halfway between the two curves would have a value halfway between the values of the two curves, or −7.5 V.

6. (a) 8 mA; (b) 7 mA; (c) 10 mA; (d) 280 V
(e) 415 V; (f) −5 V; (g) −7.5 V; (h) −12 V

7. 0.018   8. 0.086   9. 0.15

10. 10 . . . Refer to Fig. 18.   11. 100

5 LINEAR CIRCUITS . . . A straight-line curve on a graph, such as the curve in Fig. 4, is called a *linear curve*. Ideally, the curve showing the response of an amplifier would be a linear curve. Any departure from linearity may indicate distortion.

Consider the amplifier of Fig. 19. The record turntable furnishes a small signal to the amplifier. It is the job of the amplifier to build this signal up until it is strong enough to operate the speaker. The amplitude of the signal output from the turntable will vary in accordance with the amplitude of the sounds that the signal currents represent. If distortion is to be avoided, the amplifier must amplify both the weak and strong output

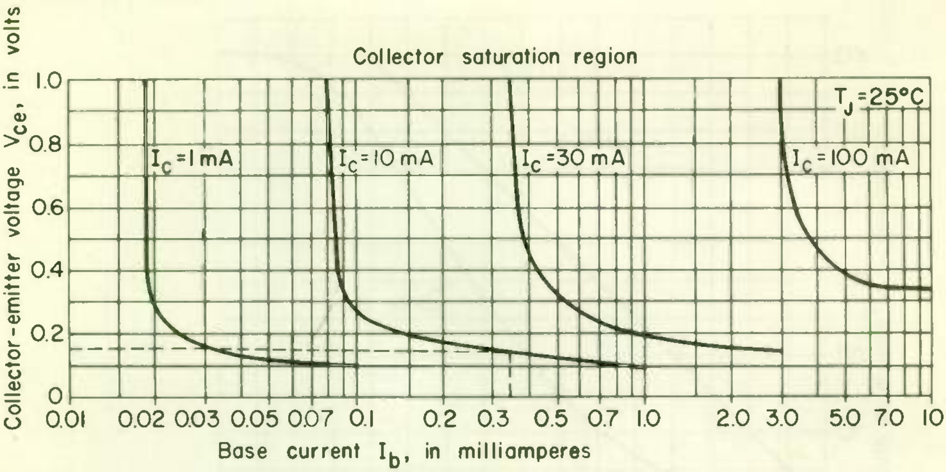

Fig. 18

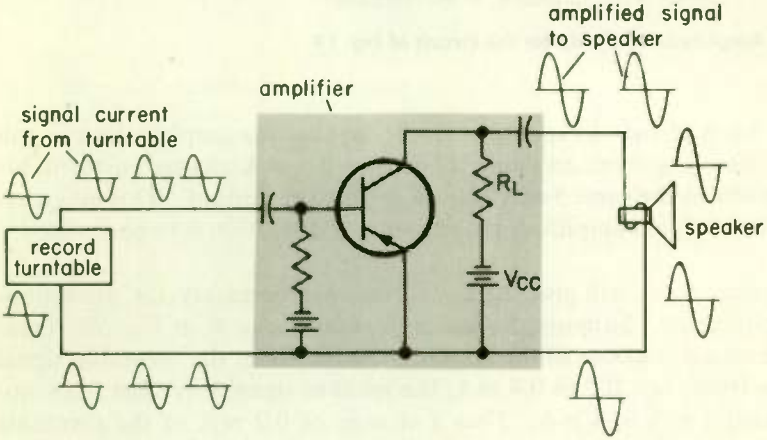

Fig. 19 Transistor amplifier circuit showing current waveforms.

signals from the turntable an equal amount—that is, the amplification must be the same for both weak and strong signals.

Linear curve *A* in Fig. 20 is an ideal response curve for the amplifier. When the turntable signal current increases from 0.2 to 0.3 mA, the speaker current, by curve *A*, increases from 10 to 15 mA. Since a 0.1-mA change in turntable current produces a 5-mA change in speaker current, the current amplification is 5/0.1 = 50. If the turntable current changes from 1.0 to 1.1 mA, then by curve *A* the speaker current changes from 50 to 55 mA. Thus a 0.1-mA change in the turntable current again pro-

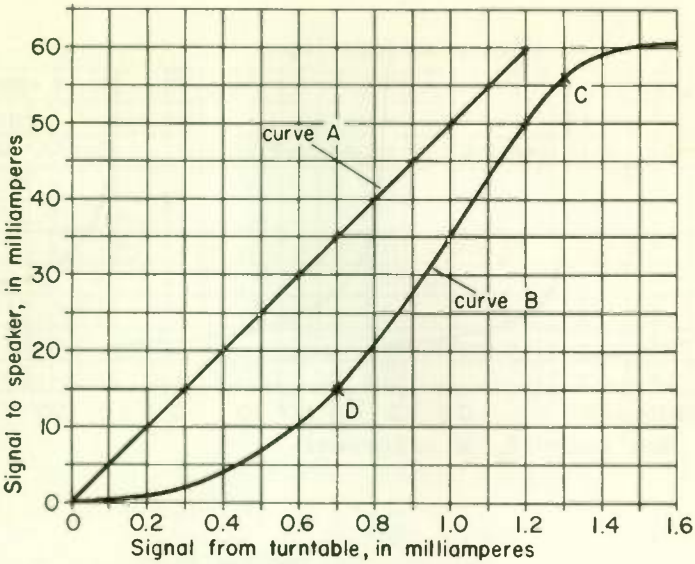

Fig. 20 **Amplitude response for the circuit of Fig. 19.**

duces a 5-mA change in speaker current, so that the amplification is still 5/0.1 = 50. Anywhere on curve *A*, then, a 0.1-mA change in turntable signal produces the same 5-mA change in speaker current. This equal response for all signal amplitudes is necessary if distortion is to be avoided.

Only a linear curve will give the equal response necessary for distortionless amplification. Suppose, for example, that curve *B* in Fig. 20 represents the actual response of the amplifier. Now when the turntable signal increases from, say, 0.2 to 0.4 mA, the speaker signal increases from approximately 1 mA to 4 mA. Thus a change of 0.2 mA in the turntable signal produces only a 3-mA change in speaker current. The amplification is 3/0.2 = 15. But when the turntable current changes from 1.0 to 1.2 mA, the speaker current changes 15 mA (from 35 to 50 mA). Now the gain is 15/0.2 = 75.

So we see that changes in turntable current on different parts of curve *B* do not produce equal changes in speaker current, nor is the amplification the same on different parts of curve *B*. Only a straight-line curve, like curve *A*, can provide the uniform response required for distortionless amplification.

Unfortunately, tubes and transistors, which are our practical amplifying devices, do not have perfect linear response curves like the ideal curve *A* of Fig. 20. Notice, however, that the portion of curve *B* between points *D* and *C* is fairly linear. Therefore, as long as we keep the turntable output between 0.7 and 1.3 mA, distortion will be negligible. The tube curves in Fig. 14 are approximately linear except near their bottoms. Hence, undistorted operation of the 12BH7 tube, the type in Fig. 14, requires that the plate current never drop below approximately 5 mA.

WHAT HAVE YOU LEARNED?

1. A straight line is a __________ curve.

2. If an amplifier has a linear curve, the weak input signals (*will*) (*will not*) be amplified equally as well as the strong input signals.

3. Refer to Fig. 20. Curve *A* is a linear curve because it is a (a) __________ line, but curve *B* (b) *(is) (is not)* a straight line; therefore it is a (c) __________ curve.

4. Refer to Fig. 20, curve *B*. For an increase of 0.1 mA, the current amplification at a turntable current of 0.5 mA is (*less than*) (*about equal to*) (*greater than*) the current amplification at 1.2 mA.

5. Refer to Fig. 20, curve *B*. For an increase of 0.1 mA, the current amplification at a turntable current of 0.7 mA is (*less than*) (*about equal to*) (*greater than*) the current amplification at 1.1 mA.

6. Comparing the answers of Problems 4 and 5, we can say that the current amplification of Problem 4 (a) (*is*) (*is not*) linear, whereas the current amplification of Problem 5 is virtually (b) __________.

7. Refer to Fig. 14. If you were operating a 12BH7 tube and the plate current decreased to 3 mA, the output would be __________. Why?

ANSWERS

1. Linear 2. Will
3. (a) Straight; (b) is not; (c) nonlinear
4. Less than . . . The current amplification for a change of 0.1 mA at 0.5 mA would be 10.5 mA − 7.0 mA divided by 0.1 mA, or 3.5/0.1 = 35. At an input signal level of 1.2 mA the output would increase 56 mA − 50 mA = 6 mA. The current amplification would be 6 mA/0.1 mA = 60, and thus the amplification at 1.2 mA would be almost double the amplification at 0.5 mA.
5. About equal to . . . The amplification at 0.7 mA is 7 mA/0.1 mA = 70, and the amplification at 1.1 mA is 7.5 mA/0.1 mA = 75.

6. (a) Is not (b) Linear . . . The current amplifications at the two points of Problem 4 are far apart, indicating a great deal of distortion. The current amplifications of Problem 5 are very close together, indicating a small amount of distortion; therefore, the current amplifications of Problem 5 are nearly linear.
7. Distorted . . . The output would be distorted because no matter what the grid voltage, operation of the tube would be in the nonlinear portion of the curve.

PHASORS AND VECTORS

The simplest and easiest way to understand and work many a-c circuit problems is to draw a phasor or vector diagram to scale. For this purpose you will need a ruler for drawing straight lines and measuring distances and a protractor for measuring angles. If you do not have a ruler and protractor, they can be obtained for a few cents in any drug or ten-cent store where school supplies are sold. Alternatively, the ones supplied with this lesson can be used.

Select a ruler that has a centimeter scale. The centimeters will be divided into tenths, and a centimeter scale is therefore far more convenient to use for our purposes than the inch scale, which is divided into eighths and sixteenths. Keep your scale and protractor, because you will need them in later lessons. Graph paper, also available wherever school supplies are sold, will be helpful for many problems.

Draw your phasor diagrams large so that your measurements will be more accurate. The phasor diagrams in this lesson are small because of practical printing requirements. Your drawings should be several times as large.

6 VECTORS . . . To express some quantities completely, it is necessary to state their direction as well as their magnitude. This is done by means of a straight line called a vector, drawn in the proper direction and having a length proportional to the magnitude of the quantity. An arrowhead is placed at one end of the line to indicate the direction of the quantity.

Figure 21(a) shows two men pulling in the same direction on a box, one with a pull of 50 lb and the other with a pull of 30 lb. Figure 21(b) shows an electrical analogy: two voltages in series acting in the same direction, one of 50 V and the other of 30 V. The vectors of Fig. 21(c) represent equally well either the forces of Fig. 21(a) or the voltages of Fig. 21(b). The length of each of the two vectors is proportional to the force or voltage, each block representing 10 lb or 10 V, depending upon which figure the vectors represent. The two vectors are drawn in the same direction

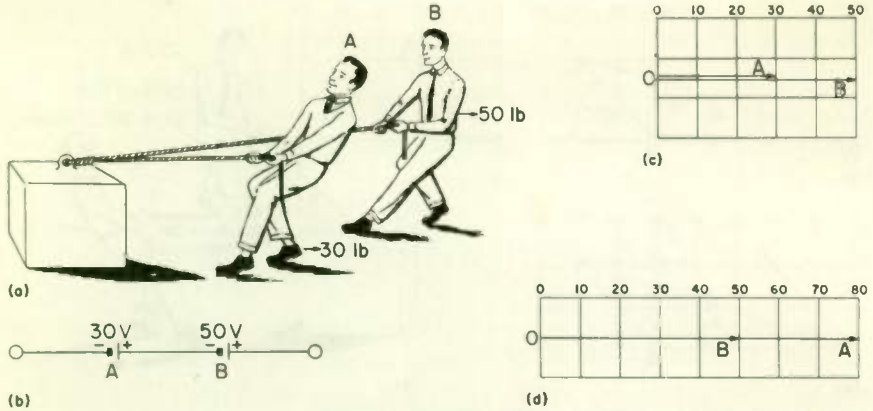

Fig. 21 Vectorial representation of two forces acting in the same direction.

because the two forces in Fig. 21(a), or the two voltages of Fig. 21(b), are both acting in the same direction.

In Fig. 21(d), vector *A* of (c) is drawn onto the end of vector *B*. By measuring the total vector length, from *O* to *A*, the total force, called the *resultant*, is found. This distance is 8 squares, so that the total pull on the box of Fig. 21(a) is 80 lb, or the circuit voltage of (b) is 80 V.

In Fig. 22(a) the same two men are pulling on the box with the same individual forces, but in opposite directions. Similarly, Fig. 22(b) shows

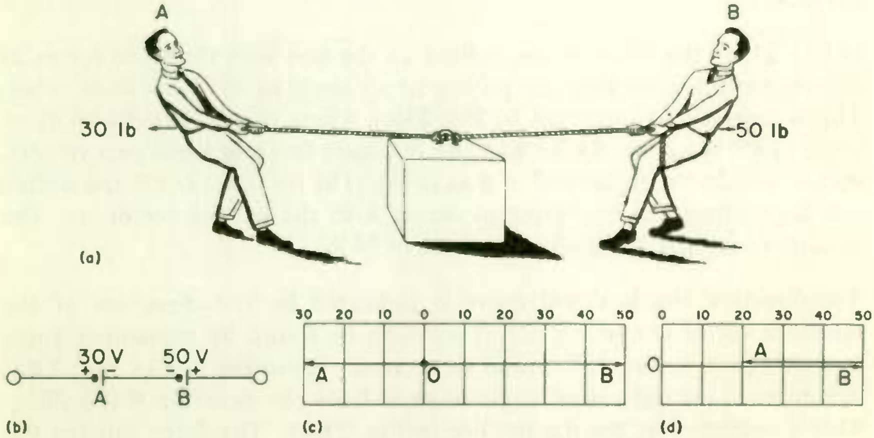

Fig. 22 Vectorial representation of two forces acting in opposite directions.

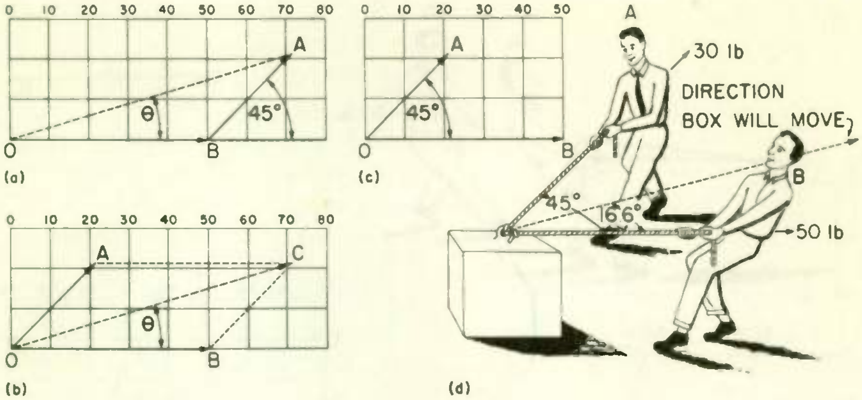

Fig. 23 General method of vectorial representation.

the same batteries, but now they are connected to buck each other. Figure 22(c) shows the conditions of (a) and (b) illustrated by vectors. The length of each vector is, as before, proportional to the force it represents. But in this case, the vectors are drawn in opposite directions from the starting point *O* to indicate the opposite directions in which the forces are acting.

In Fig. 22(d), vector *A* is drawn from the end of vector *B* to find the net force. Each vector is considered as drawn in the direction indicated by the arrow. Vector *B* is drawn by starting at point *O* and drawing to point *B*. Vector *A* is drawn by beginning where vector *B* ended (at point *B*) and drawing the proper distance in the direction that the force represented by vector *A* is acting. The net distance *OA*, which is two blocks, shows that the net pull on the box of Fig. 22(a) is 20 lb and that the circuit voltage of (b) is 20 V.

In Fig. 23(d), the two men are pulling on the box with the same forces as before, but this time they are pulling at an angle of 45° from each other. This is represented vectorally by Fig. 23(c), where vector *A* is drawn at an angle of 45° to vector *B*. To find the resultant force of these two vectors, vector *A* is drawn on the end of *B* as in (a). The resultant *OA* is the dotted line drawn from the beginning of vector *B* to the end of vector *A*. The resultant vector is 7.4 blocks (net force of 74 lb).

The direction the box will move is indicated by the direction of the resultant vector *OA* in Fig. 23(a) and can be found by measuring angle θ with a protractor. It is found to be 16.6°. Thus the box of Fig. 23(d) will move to the right at an angle of 16.6° from the direction *B* is pulling. This is indicated by the dashed line in Fig. 23(d). The force moving the box in this direction will be 74 lb.

You must draw the vectors of Fig. 23(a) much larger than in the figure so you can measure the resultant *OA* with reasonable accuracy. Graph paper or squared paper as used in Fig. 23 is helpful in drawing vector diagrams, but it is not necessary. A convenient scale to use would be 5 lb = 1 cm; then you would divide the force by 5 to find the length of each vector. Thus *OB*, which represents 50 lb, should be drawn 10 cm long and vector *OA* should be 6 cm long. If you are careful to be accurate, you will find the length of the resultant *OA* to be 14.8 cm. Since 1 cm represents 5 lb, the resultant force is 5 × 14.8 = 74 lb.

Another way to find the resultant of the vectors of Fig. 23(a) is to use the parallelogram method of Fig. 23(b). Here line *AC* is drawn parallel to *OB* and *BC* is drawn parallel to *OA*. *OC* is then the resultant vector. While this appears at first glance to be a substantially different method than that of (a), actually the two are essentially the same. *BC* of (b) is the same length as *OA* and makes the same angle with the horizontal line *OB* as *OA* does. Hence, if we draw vector *A* onto the end of vector *B*, it will take the position now taken by line *BC*. Triangle *OBC* of (b) is therefore identical with triangle *OBA* of (a). The parallelogram method of (b) is merely a convenient method of transferring vector *A* to the end of vector *B*.

WHAT HAVE YOU LEARNED?

1. The ruler you use to measure your vectors should have a (a) ________________ scale. The centimeter scale is divided into (b) ________________ and is more convenient for our work. Each tenth of a centimeter is called a (c) ________________. Hint: How many of these finer divisions are there in a meter?

2. You should draw your vector diagrams larger than those in the lesson because the larger the diagram the more ________________ the measurement.

3. By using plain or graph paper, find the resultant of two forces each of 50 lb and moving at 90° to each other. The resultant is (a) __________ pounds and the 90° angle is now composed of two angles measuring (b) __________ and (c) __________. We can draw a conclusion from the above work. If two forces of equal magnitude move at a right (90°) angle to each other, the resultant force will move along a line separated from each original force vector by 45°.

ANSWERS

1. (a) Centimeter (b) Tenths (c) Millimeter . . . The term "milli" means 1/1000; therefore there are 1000 finer divisions in one meter.
2. Accurate 3. (a) 70.7 lb . . . See Fig. 24. (b) 45° (c) 45°

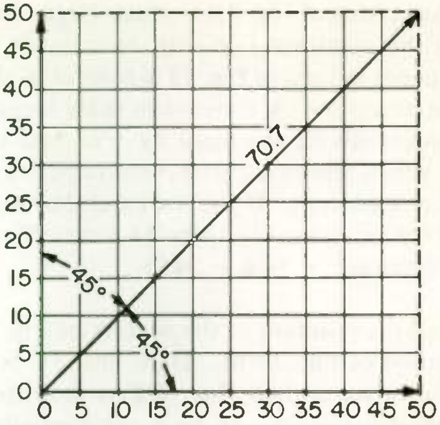

Fig. 24

7 ANGLES . . . The figure formed by two lines meeting at a point, as in Fig. 25(a), is called an angle. The meeting point is called the *vertex* and is commonly indicated by O. For our purpose it is convenient to think of

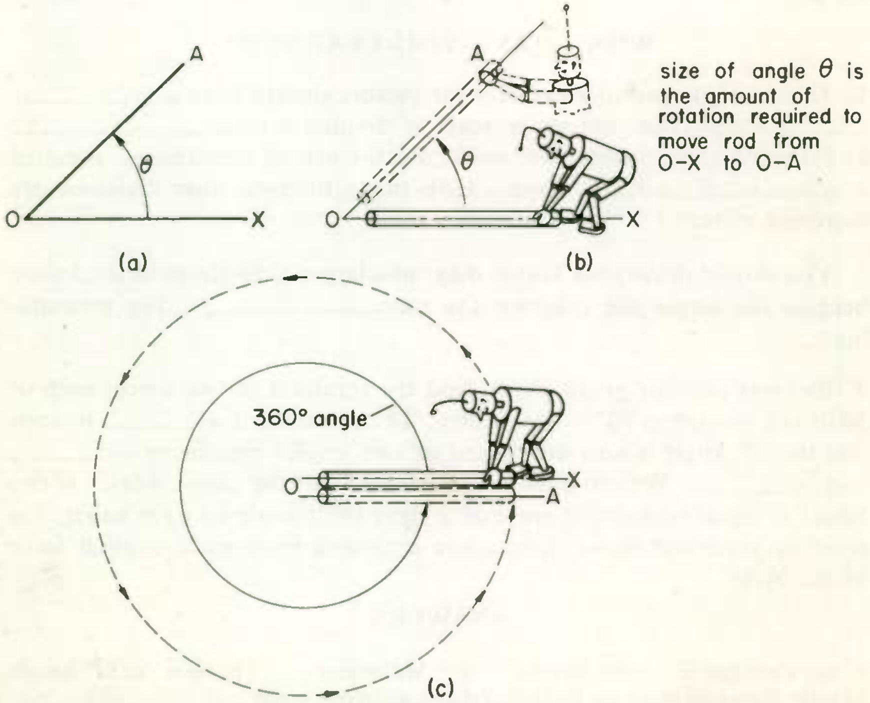

Fig. 25 An angle and what determines its size.

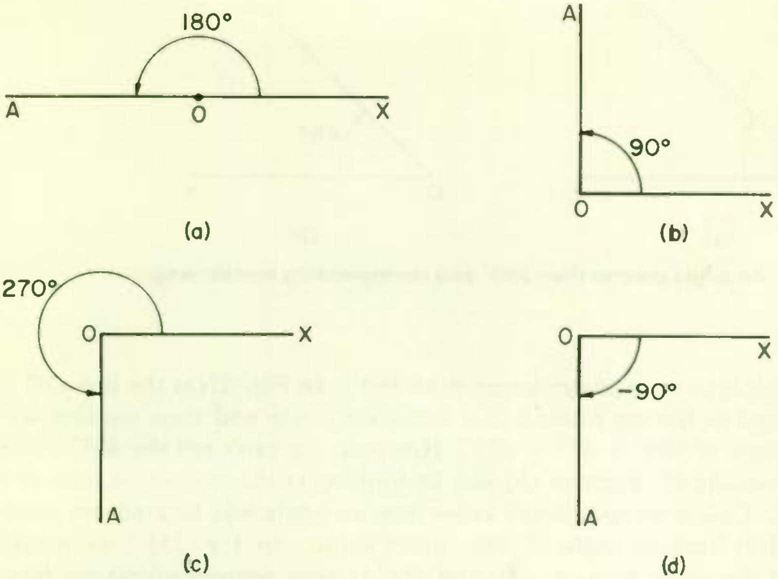

Fig. 26 Some common angles.

an angle as being formed by the rotation of a line about one of its ends. Thus in Fig. 25(a) we think of the angle θ (Greek theta) as formed by rotating line *OX* about its end *O* until it reaches position *OA*. The size of the angle is determined by the amount of rotation required to get from the starting to the finishing side of the angle. The man in Fig. 25(b) forms the angle *XOA* by moving the rod from position *OX* over to position *OA*, and the amount he must turn the rod to do this determines the size of the angle.

If the man continues rotating the rod, the moving end eventually describes a complete circle as shown in Fig. 25(c). The sizes of angles are measured in degrees, and for this purpose a circle is considered as having 360°. Hence the angle of Fig. 25(c) is a 360° angle. The rotation of *OA* in Fig. 26(a) is half as far as required for a complete circle. Hence, the angle formed is 180°. The angle of Fig. 26(b), where the sides meet "square" to each other, is a 90° angle. This is called a right angle.

When we think of an angle as formed by rotating a line, the direction of rotation is normally counterclockwise. Thus if we consider the angle in Fig. 26(c) as formed by rotating *OX* until it reaches position *OA*, the angle shown in (c) is 270°. An angle formed by rotating clockwise is a *negative angle.* Thus in Fig. 26(d) *OX* is rotated clockwise to position *OA* to form a −90° angle.

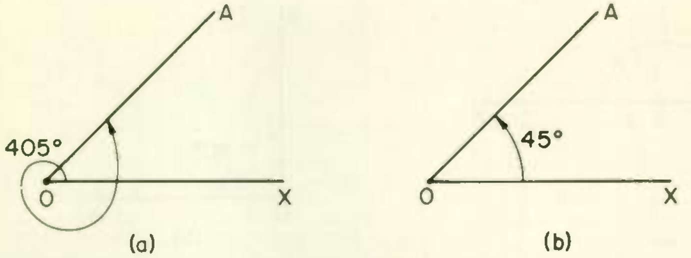

Fig. 27 An angle greater than 360° and corresponding smaller angle.

It is possible to have angles larger than 360°. In Fig. 27(a) the line *OX* is considered as having rotated in a complete circle and then another 45° for an angle of 360° + 45° = 405°. However, we can't tell the 405° angle of (a) from the 45° angle of (b) just by looking at the two angle sides *OA* and *OX*. Unless we specifically know how an angle was formed, we often can't tell it from an angle of some other value. In Fig. 25(c) we would think of the angle between *OX* and *OA* as zero degrees unless we happened to know that the angle was formed by rotating *OX* in a circle. Similarly, there is no way to tell whether the angles in Fig. 26(c) and (d) are −90° or +270° unless we know how the angles were formed. Also, if we look at the angles in (c) and (d) as formed by moving line *OA* counterclockwise to position *OX*, then each of the angles is +90°.

If we just see an angle and have no idea how it was formed—and that is often the way it is—we consider the angle to have the smallest value it could have and we consider it to be positive. All the angles in Fig. 26(b), (c), and (d) would be considered 90° angles if all we knew about them was the positions of the pairs of lines that form their sides.

WHAT HAVE YOU LEARNED?

1. The meeting point of the two sides of an angle is called the (a) __________, and it is usually designated as (b) ______.

2. If you rotate a line about one of its ends, you will create an (a) __________, and the stationary end of the line will be the (b) __________.

3. A full circle contains (a) ______ degrees, a quarter circle contains (b) ______ degrees, three full circles contain (c) ______ degrees, and half a circle contains (d) ______ degrees.

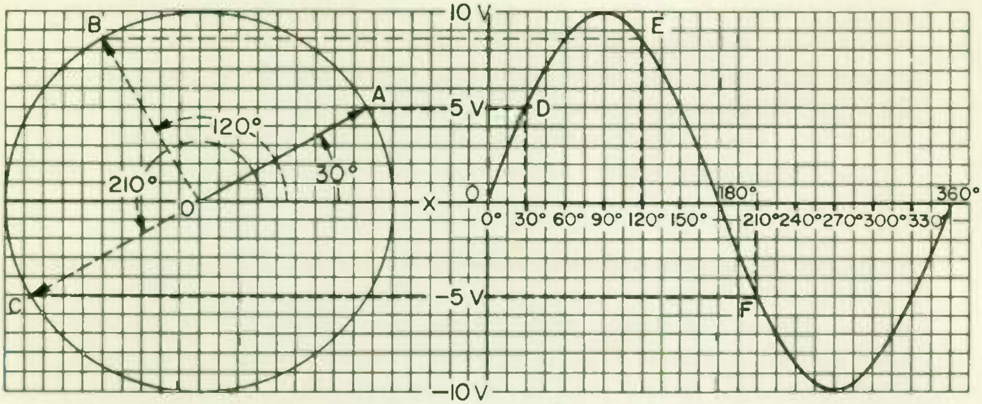

Fig. 28 **How a revolving vector generates a sine wave.**

4. If you wished to divide a circle into ten equal segments, you would consider the center of the circle as the (a) __________ and, using a protractor, mark off ten angles of (b) ________ each.

5. If you had a pie that you wished to cut into eight equal pieces, you could consider the center of the pie as the (a) __________ and then try to cut out wedges of pie that had angles of (b) ________.

ANSWERS

1. (a) Vertex; (b) *O*   2. (a) Angle; (b) vertex
3. (a) 360; (b) 90; (c) 1080; (d) 180
4. (a) Vertex; (b) 36°   5. (a) Vertex; (b) 45°

8 PHASORS AND SINE WAVES . . . A vector that can be considered as continuously revolving at a constant rate and that is used to represent a-c voltages and currents is called a *phasor*. Such a revolving vector can be used to generate a sine wave, and therefore it can be used to study circuits using sine-wave a-c.

Figure 28 shows the connection between a sine wave and a phasor. Like a circle, one complete cycle of a sine wave can be divided into 360°, as shown on the base line of the sine wave in the figure. The length of the phasor *OA* at the left is used as the peak value of the a-c voltage (or current) represented by the sine wave; it is 10 V in Fig. 28.

The phasor *OA* is assumed to start from position *OX* and revolve counterclockwise at a constant rate; it will make one complete revolution during the time of one cycle of the sine wave. When the phasor has revolved from, say, position *OX* to position *OA*, it will have formed an angle of 30°. The height of the arrowhead end of *OA* above the base line *OX* at 30° will then be taken as the height of the sine wave above the base line at 30°. That is, the horizontal dashed line *AD* is drawn to meet the vertical dashed line from 30° on the base line to determine point *D* of the sine curve.

A bit later the phasor will have revolved to position *OB*, generating an angle of 120°. Again a horizontal dashed line, *BE*, is drawn to meet a vertical dashed line from a point on the base line, 120° to determine point *E* of the sine curve. Similarly, when the phasor reaches position *OC*, which is an angle of 210° from the starting position, a horizontal line is drawn to determine point *F*. Thus we can draw the sine-wave curve from the points formed by the intersections of horizontal lines from the phasor tip positions and vertical lines from the corresponding angle positions on the base line.

The phasor keeps revolving after completing one revolution, and so it generates additional sine-wave cycles that follow the cycle shown in the figure. Thus a revolving phasor can represent the varying amplitude of an a-c voltage or current during each cycle.

WHAT HAVE YOU LEARNED?

1. We can use phasors to study a-c sine waves because the phasors are considered as __________ continuously at a constant rate.

2. Refer to Fig. 28. The sine wave has its maximum positive value at (a) ________ degrees and its maximum negative value at (b) ________ degrees. The value of the sine wave is zero at (c) ________ degrees, (d) ________ degrees, and (e) ________ degrees.

3. Because the phasor is (a) ________________ rotating, the sine wave will have its maximum positive value at 90° and will repeat this value every (b) ________ degrees of rotation. However, starting at 0°, the value of the sine wave will be zero every (c) ________ degrees of rotation.

ANSWERS

1. Rotating 2. (a) 90; (b) 270; (c) 0; (d) 180; (e) 360
3. (a) continuously; (b) 360; (c) 180

9 SHOWING PHASE RELATIONSHIPS BY USING PHASORS...

Figures 21 and 22 show how aiding or opposing d-c voltages can be represented by vectors and the total voltage can be found by vector addition. The vectors in Figs. 21 and 22 can equally well be considered as phasors—that is, revolving vectors—representing in-phase and out-of-phase a-c sinusoidal voltages. If *OA* and *OB* in Fig. 21(c) are considered as phasors, they represent two sine waves, one of 30 V and one of 50 V, that are in phase. If they are connected in series, the two a-c voltages add, like the two battery voltages of (b), to form an 80-V a-c sinusoidal wave, represented by phasor *OA* in Fig. 21. The corresponding situation for the two sine waves 180° out of phase with each other is shown by the phasors of Fig. 22.

In between the extremes of exactly in phase and completely—that is, 180°—out of phase, two a-c voltages or currents may be out of phase by some amount less than 180° but greater than 0°. For example, two a-c voltages might be 45° out of phase. This condition would be represented by drawing two phasors at an angle of 45°, as in Fig. 23(a). If the two sine voltages are 50 and 30 V and if they are in series, the circuit voltage is then represented by the resultant of Fig. 23(b) and is equal to 74 V. The phase angle between the total voltage and the individual voltage of the 50-V source is 16.6°.

This topic on the use of phasors is intended only as a brief introduction, so don't worry if you don't understand all the details. Later lessons will clarify the use of phasors.

WHAT HAVE YOU LEARNED?

1. Use plain or graph paper, a ruler, and a protractor to work the following problems. Assume you have two series a-c sinusoidal voltages of 13 and 84 V out of phase by 85°. Find (a) the resultant voltage, (b) the phase angle between the resultant voltage and the 13 V, and (c) the phase angle between the resultant voltage and the 84 V.

ANSWERS

1. (a) 86 V . . . See Fig. 29. First draw a line 13 units long, then use your protractor to draw a line at 85° to the 13-unit line. Mark off 84 units on the second line. Now you have two series a-c voltages 85° apart represented by phasors. By the parallelogram method, draw the dashed lines parallel to the two original lines. Next, draw the resultant from O to the intersection of the two dashed lines. The resultant line is 86 units long.
(b) 76.3° . . . By measurement with the protractor, the angle between the resultant line and the 13-V line is 76.3°.
(c) 8.7° . . . 85.0° − 76.3° = 8.7°. You can use your protractor to verify the angle is 8.7°. Remember, because of the difficulty in drawing and reading phasor diagrams, your answer may not be exactly the same as our answer.

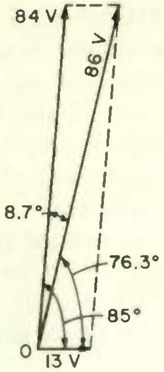

Fig. 29

MAKING FORMULAS MORE VERSATILE

Formulas in electronics are very often not given in a form that will allow us to find what we want directly. For example, there is no problem in using the formula $P = I^2R$ if we know the values of I and R and want to find P. But suppose we know the values of P and R and want to find the value of I, what do we do then?

10 USING PROPORTION WITH FORMULAS . . . If a formula does not have any + or − signs in it, proportion can be used to find values that the formula does not give directly. You will remember from your lesson on proportion that such a formula can be considered as a proportion. Thus the formula $I = E/R$ can be written as the proportion $I/1 = E/R$, and when it is thus written, E and R can be found as easily as I can be.

Example . . . The voltage E across a capacitor is found by the formula

$$E = \frac{Q}{C}$$

where Q is the quantity of electricity stored in coulombs and C is the capacitance in farads. What is the capacitance if 100 V across a capacitor will store 0.02 coulomb of electricity in the capacitor?

Solution . . . Substituting the given values in the formula, we have

$$100 = \frac{0.02}{C}$$

This can be written as a proportion as follows:

$$\frac{100}{1} = \frac{0.02}{C}$$

Now find the value of C as you would work any other proportion.

$$C = \frac{0.02 \times 1}{100} = \frac{0.02}{100} = 0.0002 \text{ F, } ans.$$

WHAT HAVE YOU LEARNED?

1. Use the formula in the example of the preceding topic to find the value of Q if $E = 500$ V and $C = 0.004$ F.

2. The time constant of an inductance and resistance in series is given by the formula $t = \frac{L}{R}$, where t is the time in seconds, L is inductance in henrys, and R is the resistance in ohms. What value of R should you use with an inductance of 5 H in order to obtain a time constant of 0.4 sec?

3. By the formula of Problem 2, if R is 100 Ω, what value should L be for a time constant of 0.2 sec?

4. The cutoff point of a tube E_c in volts is given by the formula $E_c = \frac{E_p}{\mu}$, where E_p is the plate voltage and μ is the amplification factor. If μ is 100, what plate voltage is needed so that the cutoff point will be 5 V?

ANSWERS

1. 2 coulombs . . . $E = \frac{Q}{C}$; $500 = \frac{Q}{0.004}$. Writing this as a proportion,

$$\frac{500}{1} = \frac{Q}{0.004} \qquad Q = \frac{500 \times 0.004}{1} = 2 \text{ coulombs}$$

2. 12.5 Ω . . . $t = \frac{L}{R}$; $0.4 = \frac{5}{R}$. Writing this as a proportion,

$$\frac{0.4}{1} = \frac{5}{R} \qquad R = \frac{5 \times 1}{0.4} = 12.5\ \Omega$$

3. 20 H 4. 500 V

11

USING PROPORTION WITH SEVERAL VARIABLES . . . When a formula has been written as a proportion, the method of finding the unknown always makes use of the principle that the *cross products must be equal*. Given the formula $B = \frac{CQ}{2NRP}$, where $C = 90$, $Q = 40$, $N = 3$,

$R = 4$, and $P = 5$, you can easily substitute these values to find that $B = 30$. Now writing the formula as a proportion, we see in Fig. 30 that the cross products are equal.

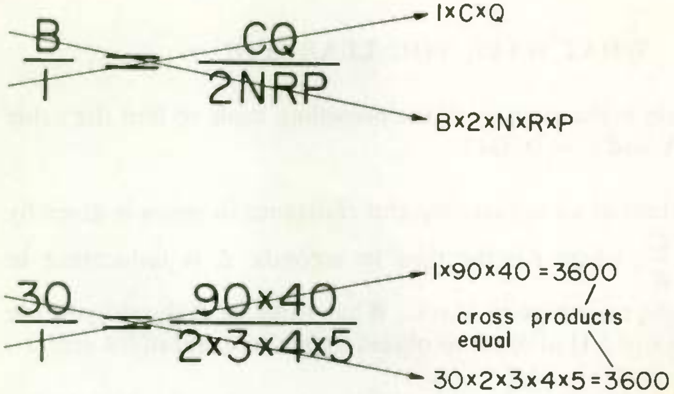

Fig. 30 **In any proportion the cross products are equal.**

Suppose that the values of B, C, Q, N, and P in the formula $B = \frac{CQ}{2NRP}$ are as in the preceding paragraph but we don't know the value of R. By writing the formula as a proportion, we can find R or any other unknown value by dividing the cross product in which all the values are known by the product of the known values in the other cross product. See Fig. 31(a), which shows how we find that $R = 4$. Notice in particular that the cross product in which all the values are known always goes in the numerator (the top number of the fraction) and the cross product associated with the unknown value always goes in the denominator (the bottom number of the fraction).

Figure 31(b) shows how to rearrange the formula $B = \frac{CQ}{2NRP}$ into the form $R = \frac{CQ}{2BNP}$. In the new form, we can substitute our known values and thus find R directly, as follows:

$$R = \frac{90 \times 40}{2 \times 30 \times 3 \times 5} = 4$$

Notice in particular in Fig. 31(b) that the cross product from which the unknown R is taken forms the denominator and the cross product which does not have R forms the numerator.

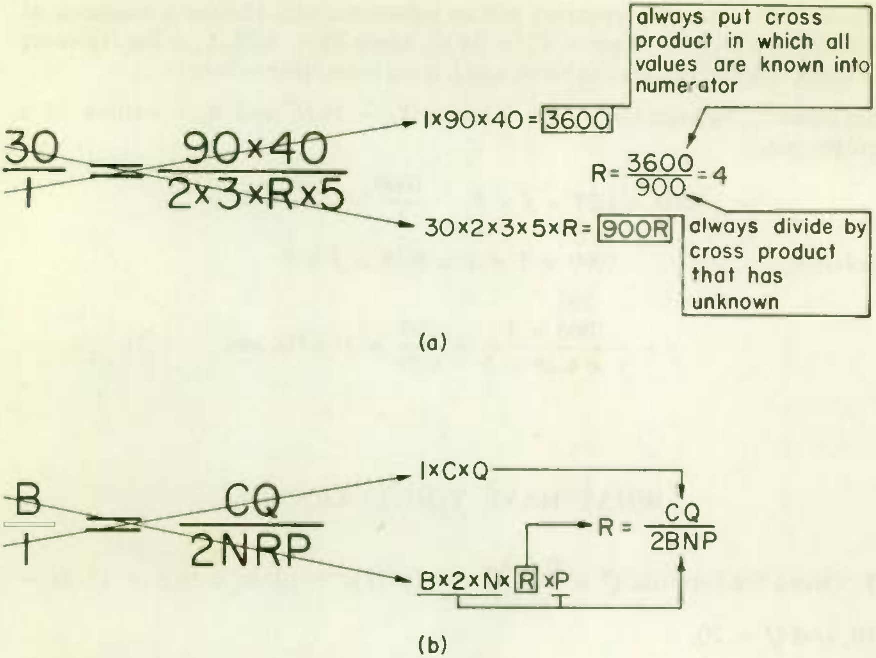

(a)

(b)

Fig. 31 Solving an equation by using proportion.

EXAMPLE 1 . . . Given the equation $A = \frac{KH}{MC}$, find the value of K if $H = 8$, $M = 12$, $A = 4$, and $C = 6$.

SOLUTION . . . Inserting the given values

$$A = \frac{KH}{MC} \qquad 4 = \frac{8 \times K}{12 \times 6}$$

Writing as a proportion

$$\frac{4}{1} = \frac{8 \times K}{12 \times 6}$$

To find K in this proportion (or any similar one) find the cross product in which all the terms are known and divide by the product of the known terms in the other cross product.

$$4 \times 12 \times 6 = 1 \times 8 \times K$$

$$K = \frac{\cancel{4} \times \overset{6}{\cancel{12}} \times 6}{1 \times \underset{\cancel{2}}{\cancel{8}}} = 36, \textit{ans.}$$

Example 2 . . . At what frequency will an inductance of 5 H have a reactance of 1000 Ω? The formula to use is $X_L = 2\pi fL$, where $2\pi = 6.28$, X_L is the reactance in ohms, f is the frequency in hertz, and L is the inductance in henrys.

Solution . . . Substituting in the formula $X_L = 2\pi fL$ and then writing as a proportion,

$$1000 = 6.28 \times f \times 5 \qquad \frac{1000}{1} = \frac{6.28 \times f \times 5}{1}$$

Solving,

$$1000 \times 1 = 1 \times 6.28 \times f \times 5$$

$$f = \frac{\overset{200}{\cancel{1000}} \times 1}{1 \times 6.28 \times \cancel{5}} = \frac{200}{6.28} = 31.8\text{ Hz, } \textit{ans.}$$

WHAT HAVE YOU LEARNED?

1. Given the formula $Q = \dfrac{0.4\,Aw}{mpH}$, find A if $w = 12$, $m = 9$, $p = 15$, $H = 10$, and $Q = 20$.

2. Using the formula of Problem 1, find H if $Q = 200$, $A = 3$, $w = 12$, $m = 9$, and $p = 15$.

3. Given the formula $X_C = \dfrac{1}{2\pi fC}$, find C if $X_C = 500$ and $f = 2000$.

4. Given the formula $W = \dfrac{E^2C}{2}$, find C if $W = 4$ and $E = 30$.

5. Rearrange the formula $X_L = 2\pi fL$ to the form needed for finding the value of L when X_L and f are known.

6. Rearrange the formula $X_C = \dfrac{1}{2\pi fC}$ to the form needed for finding the value of f when X_C and C are known.

7. Use the new formula you derived in Problem 6 to find the frequency of the voltage across a 0.1-μF capacitor if its reactance is 10,000 Ω.

8. Rearrange the formula $g_m = \dfrac{\mu}{r_p}$ and find r_p when $g_m = 1 \times 10^{-3}$ and $\mu = 70$.

9. Given the formula $X_L = 2\pi f L$, solve for f when $X_L = 1000$ and $L = 0.005$.

ANSWERS

1. 5625 . . . $Q = \dfrac{0.4\,Aw}{mpH} \qquad 20 = \dfrac{0.4 \times A \times 12}{9 \times 15 \times 10}$

$$\frac{20}{1} = \frac{0.4 \times A \times 12}{9 \times 15 \times 10} \qquad 20 \times 9 \times 15 \times 10 = 1 \times 0.4 \times A \times 12$$

$$A = \frac{9 \times 15 \times 10 \times 20}{0.4 \times 12} = 5625$$

2. 0.000533 . . . $\dfrac{200}{1} = \dfrac{0.4 \times 3 \times 12}{9 \times 15 \times H} \qquad H = \dfrac{1 \times 0.4 \times 3 \times 12}{200 \times 9 \times 15} = 0.000533$

3. 0.000000159 . . . $\dfrac{500}{1} = \dfrac{1}{6.28 \times 2000 \times C}$

$$C = \frac{1 \times 1}{500 \times 6.28 \times 2000} = 0.000000159$$

4. 0.00889 . . . $\dfrac{4}{1} = \dfrac{(30)^2 \times C}{2} \qquad C = \dfrac{4 \times 2}{1 \times (30)^2} = \dfrac{8}{900} = 0.00889$

5. $\dfrac{L}{1} = \dfrac{X_L}{2\pi f}$ . . . The cross product X_L is known and is used as the numerator, and the denominator is the cross product associated with the unknown.

6. $\dfrac{f}{1} = \dfrac{1}{2\pi C X_C}$ . . . Multiplying to get the cross products, we have $1 = 2\pi f C X_C$. The 1 is known and becomes the numerator, and the cross product associated with the unknown becomes the denominator.

7. 159 Hz . . . $\dfrac{1}{2\pi \times 0.1 \times 10^{-6} \times 10{,}000}$

$$= \frac{1}{6.28 \times 10^{-3}} = \frac{1 \times 10^3}{6.28}$$

$$= 0.159 \times 10^3 \text{ Hz} = 159 \text{ Hz}$$

8. 70,000 . . . $\dfrac{g_m}{1} = \dfrac{\mu}{r_p} \qquad g_m r_p = \mu \qquad r_p = \dfrac{\mu}{g_m}$

$$r_p = \frac{70}{1 \times 10^{-3}} = 70 \times 10^3 = 70{,}000\ \Omega$$

9. 31.85 kHz . . . $X_L = 2\pi f L$ and we want only f on the left of the equals sign.

$$f = \frac{X_L}{2\pi L} = \frac{1000}{2 \times 3.14 \times 0.005} = \frac{1000}{6.28 \times 5 \times 10^{-3}} = \frac{1000 \times 10^3}{31.4}$$

12 FORMULAS INVOLVING SQUARES AND ROOTS

. . . Suppose we are given the formula $Q = \frac{M}{H^2}$ and we want to rearrange it to find the value of H when Q and M are known. We first rearrange to find the value of H^2:

$$\frac{Q}{1} = \frac{M}{H^2} \qquad H^2 = \frac{1 \times M}{Q} = \frac{M}{Q}$$

Now, since H is the square root of H^2, we take the square root of M/Q, and we have the value of H. That is, $H = \sqrt{M/Q}$.

Example 1 . . . If $M = 45$ and $Q = 5$ in the formula $Q = \frac{M}{H^2}$, find the value of H.

Solution . . . $H = \sqrt{\frac{M}{Q}} = \sqrt{\frac{45}{5}} = \sqrt{9} = 3$, *ans.*

Alternate Solution . . .

$$Q = \frac{M}{H^2} \qquad 5 = \frac{45}{H^2}$$

$$\frac{5}{1} = \frac{45}{H^2} \qquad H^2 = \frac{45 \times 1}{5} = 9 \qquad H = \sqrt{9} = 3$$

Sometimes you will need to rearrange a formula to find the value of a symbol that is under a square-root sign. For example, you might want to find the value D in the expression $A = \frac{B\sqrt{D}}{M}$. The first step is to get rid of the square root by squaring on both sides of the equals sign. The square of a square root is the number itself. For example, the square of $\sqrt{16}$ is 16. We can see that by noting that $\sqrt{16} = 4$, and $4^2 = 16$. Similarly, the square of $\sqrt{D}$ is D.

Example 2 . . . Rearrange $A = \frac{B\sqrt{D}}{M}$ to find the value of D.

Solution . . . Square everything on both sides of the equal sign, remembering that the square of $\sqrt{D}$ is D.

$$A^2 = \frac{B^2D}{M^2}$$

Now make a proportion, and find D in the regular way.

$$\frac{A^2}{1} = \frac{B^2D}{M^2} \qquad D = \frac{A^2 \times M^2}{1 \times B^2} = \frac{A^2M^2}{B^2}$$

1. Given the formula $A = \frac{B\sqrt{D}}{M}$, find D when $A = 4$, $B = 2$, and $M = 5$.

2. Given the formula for resonant frequency, $f_0 = \frac{1}{2\pi\sqrt{LC}}$, find C when $f_0 = 10$ kHz and $L = 1.5 \times 10^{-3}$.

3. Given the formula $W = \frac{E^2C}{2}$, find C when $W = 4$ and $E = 30$.

4. Given the formula $Q = \frac{0.4A\omega}{mpH^2}$, find A when $\omega = 12$, $m = 9$, $p = 15$, $H = 10$, and $Q = 20$.

5. Given the formula for resonant frequency, $f_0 = \frac{1}{2\pi\sqrt{LC}}$, find L when $f_0 = 1.5$ kHz and $C = 0.1 \times 10^{-6}$

6. Given the formula $W = \frac{LI^2}{2}$, find I when $W = 2$ and $L = 9 \times 10^{-4}$.

7. Given the formula $X_C = \frac{1}{2\pi fC}$, find C when $X_C = 800$ and $f =$ 5 MHz.

8. Given the formula $f_0 = \frac{1}{2\pi\sqrt{LC}}$, find C when $f_0 = 4$ kHz and $L =$ 0.00005.

ANSWERS

1. 100 . . . $\frac{A}{1} = \frac{B\sqrt{D}}{M}$. Substitute numerical values, $4 = \frac{2\sqrt{D}}{5}$; cross multiply, $20 = 2\sqrt{D}$; divide both sides by 2, $10 = \sqrt{D}$, square both sides, $100 = D$. We can also solve the equation for D before substituting values: $\frac{A}{1} = \frac{B\sqrt{D}}{M}$; cross multiply, $AM = B\sqrt{D}$; square both sides, $A^2M^2 = B^2D$; divide both sides by B^2, $\frac{A^2M^2}{B^2} = D$; then substitute numerical values, $\frac{\overset{4}{\cancel{16}} \times 25}{\cancel{4}} = D = 100$.

2. 0.169×10^{-6} . . . First solve the formula for C, $\frac{f_0}{1} = \frac{1}{2\pi\sqrt{LC}}$; cross multiply, $f_0 \times 2\pi\sqrt{LC} = 1$; square both sides, $f_0^2 \times 4\pi^2 LC$; divide both sides by $f_0^2 4\pi^2 L$, $C = \frac{1}{4\pi^2 f_0^2 L}$; substitute numerical values,

$$C = \frac{1}{4 \times 9.87 \times (10 \times 10^3)^2 \times 1.5 \times 10^{-3}} = \frac{1}{59.2 \times 10^2 \times 10^6 \times 10^{-3}}$$

$$= \frac{1}{59.2 \times 10^5} = \frac{1 \times 10^{-5}}{59.2} = \frac{10 \times 10^{-6}}{59.2} = 0.169 \times 10^{-6}$$

3. 0.00889 . . . $W = \frac{E^2 C}{2} \qquad 2W = E^2 C \qquad \frac{2W}{E^2} = C \qquad \frac{2 \times 4}{900} = C$

$$C = 0.00888888 \qquad \text{rounded off, } C = 0.00889$$

4. 56250 . . . First solve the formula for A, $A = \frac{QmpH^2}{0.4\,\omega}$.

5. 0.113 . . . Solve the formula for L, $L = \frac{1}{4\pi^2 f_0^2 C}$

Substitute numerical values,

$$L = \frac{1}{4 \times 9.87 \times (1.5 \times 10^3)^2 \times 0.1 \times 10^{-6}}$$

$$= \frac{1}{4 \times 9.87 \times 2.25 \times 10^6 \times 0.1 \times 10^{-6}} = 0.1126$$

6. 66.7 . . . Rearranging for I,

$$I = \sqrt{\frac{2W}{L}} \qquad I = \sqrt{\frac{2 \times 2}{9 \times 10^{-4}}} \qquad I = \sqrt{\frac{4}{9 \times 10^{-4}}} = \frac{2}{3 \times 10^{-2}} = 66.7$$

7. 39.8×10^{-12} . . . $\frac{X_C}{1} = \frac{1}{2\pi f C} \qquad X_C 2\pi f C = 1$

$$C = \frac{1}{2\pi f X_C} = \frac{1}{2 \times 3.14 \times 5 \times 10^6 \times 800} = \frac{1}{6.28 \times 5 \times 8 \times 10^8}$$

$$= \frac{1}{6.28 \times 4 \times 10^9} = \frac{1 \times 10^{-9}}{25.12} = \frac{1000 \times 10^{-12}}{25.12}$$

8. 31.7×10^{-6} . . . $\frac{f_0}{1} = \frac{1}{2\pi\sqrt{LC}} \qquad f_0 \times 2\pi\sqrt{LC} = 1$

$$f_0^2 4\pi^2 LC = 1 \qquad C = \frac{1}{f_0^2 4\pi^2 L}$$

$$C = \frac{1}{(4 \times 10^3)^2 \times 4 \times 9.87 \times 5 \times 10^{-5}} = \frac{1}{16 \times 10^6 \times 4 \times 9.87 \times 5 \times 10^{-5}}$$

$$= \frac{1}{16 \times 9.87 \times 20 \times 10^{6} \times 10^{-5}} = \frac{1}{32 \times 9.87 \times 10^{2}}$$

$$= \frac{1 \times 10^{-2}}{315.8} = \frac{10{,}000 \times 10^{-6}}{315.8} = 31.7 \times 10^{-6}$$

13 PROPORTIONS INVOLVING A SQUARE OR ROOT . . . You have seen how proportion can be used to rearrange formulas involving squares and roots. Quite often regular proportion problems, where rearranging is not the objective, also involve squares and roots. One quantity is often directly or inversely proportional to the square of another quantity. Or one quantity may be proportional or inversely proportional to the square root of some other quantity.

EXAMPLE . . . The resistance of a wire is inversely proportional to the square of the diameter of the wire. If a wire 0.15 in. in diameter has a resistance of 70 Ω, what will be the resistance of the same length of wire with a diameter of 0.25 in.?

SOLUTION . . .

	Resistance	Diameter
Small wire	70 Ω	$(0.15)^2$ in.
Large wire	x Ω	$(0.25)^2$ in.

$$\frac{x}{70} = \frac{(0.15)^2}{(0.25)^2} = \frac{0.0225}{0.0625} \qquad x = 25.2\ \Omega,\ \textit{ans.}$$

EXPLANATION . . . In the table, the diameter values are shown squared because the problem states that the proportion is to the square of the diameter. In setting up the proportion, the resistance ratio in the table, $\frac{70}{x}$, is inverted to give $\frac{x}{70}$ because the problem says that an inverse proportion is involved. The diameter ratios could equally well have been inverted.

WHAT HAVE YOU LEARNED?

1. The resistance of a wire is inversely proportional to the square of the diameter of the wire. If a wire 0.21 in. in diameter has a resistance of 80 Ω, what will be the resistance of the same length of wire with a diameter of 0.25 in.?

2. The power dissipated in a resistor is proportional to the square of the voltage impressed. If a voltage of 100 V will dissipate 240W in a certain resistor, how much power will be dissipated if the voltage is increased to 180 V?

3. 400 W of power is dissipated in a certain resistor. How much power will be dissipated in this resistor if the voltage is tripled?

4. 400 W of power is dissipated in a certain resistor. How much power will be dissipated in this resistor if the voltage is reduced to one-third of its original value?

ANSWERS

1. 56.4 Ω 2. 778 W . . . $\frac{100^2}{180^2} = \frac{240}{x} \qquad \frac{10{,}000}{32{,}400} = \frac{240}{x} \qquad x = 778\text{ W}$

3. 3600 W . . . Since no actual voltage is stated, assume the voltage is 1. The tripled voltage will then be 3. Hence,

$$\frac{1^2}{3^2} = \frac{400}{x} \qquad \frac{1}{9} = \frac{400}{x} \qquad x = 3600\text{ W}$$

4. 44.4 W . . . The ratio of the original voltage to the new voltage will be 3 to 1. The ratio of the original power to the new power will be 400 to x. Since it is a direct proportion, set these two ratios equal, but not until you square the voltage ratio.

$$\frac{3^2}{1^2} = \frac{400}{x} \qquad \frac{9}{1} = \frac{400}{x} \qquad x = 44.4\text{ W}$$

14 REARRANGING FORMULAS WITH + AND − SIGNS . . . The methods of solving formulas so far discussed won't work for formulas that have plus or minus signs in them, such as $R = R_1 + R_2 + R_3$. Suppose we know the values of R, R_1, and R_3 and want to find the value of R_2. We can rearrange the formula into the form $R_2 = R - R_1 - R_3$, and thus find R_2, by remembering two simple rules:

1. Any term can be moved from one side of the equals sign to the other provided the sign in front of the term is changed when the term is moved. (Strictly speaking, the same term but with the *opposite sign* is added on each side of the equals sign. The net result is as stated in the rule.)

2. The signs in front of the terms may be changed at will, but if any one of the signs is changed, all the signs must be changed. (Again strictly speaking, both sides of the equation are multiplied by either +1 or −1.)

Now using rule 1, lets move R in the formula $R = R_1 + R_2 + R_3$ to the right side of the equals sign. Doing that will leave nothing to the left of the equals sign, so we write a zero there. Thus we have $0 = R_1 + R_2 + R_3 - R$. Of course it makes no difference in what order we write the terms on the right of the equals sign. We could just as well write 0 =

$R_1 - R + R_3 + R_2$. Our next step is to move R_2 from the right side of the equals sign over to the left side, remembering to change its sign when we move it. Now we have $-R_2 = R_1 + R_3 - R$. Finally, we get rid of the minus sign in front of R_2 by using rule 2 to change the sign of every term. This gives us $R_2 = -R_1 - R_2 + R$, which can be written equally well as $R_2 = R - R_1 - R_2$.

It is easy to see why we can move terms from one side to the other of an equals sign if we change the signs of the terms moved. For example, let's consider the equation $6 + 8 - 5 = 9$. If we change the sign of -5 and move it to the right, we have $6 + 8 = 9 + 5$, which is a true equality. In this new equation we might move the 9 to the left, giving us $6 + 8 - 9 = 5$, which is still true. No matter what term you move, the right and left sides of the equation will stay equal if you always change the sign of every term that you move to the other side.

WHAT HAVE YOU LEARNED?

1. Given the formula $A + D - C = Q + R$, rearrange it to find the value of C when $A = 2$, $D = 6$, $Q = 9$, $R = 7$.

2. In the formula of Problem 1 we can move Q and R to the left side of the equals sign and maintain the true equality only if we change the (a) ________ of both Q and R.

3. If, in Problem 1 we moved A and D to the right side of the equals sign, what would be the value of $-C$? How would you change the true equality to obtain a value for $+C$?

4. If you had a series string of resistors whose total resistance R_t was 1567 Ω and you knew the values $R_1 = 256$ Ω and $R_2 = 653$ Ω but not the value of R_3, find the value of R_3 by using the formula $R_t = R_1 + R_2 + R_3$.

5. Kirchhoff's current law states that the total current entering a given point equals the total current leaving that point. If two currents $I_1 = 20$ mA and $I_2 = 30$ mA enter a given point and two currents I_3 and I_4 leave that point, what is the value of I_4 if $I_3 = 12.5$ mA?

6. Kirchhoff's voltage law states that the sum of the voltage rises in a complete loop equals the sum of the voltage drops. If E_1 and E_2 are rises and E_3 and E_4 are drops, what is the value of E_4 if $E_1 = 30$ V, $E_2 = 15$ V, and $E_3 = 17.8$ V?

1. -8 . . . Rearranging the formula for C, we move Q and R to the left of the equals sign, remembering to change the signs of Q and R. We move C to the right of the equals sign, being careful to change its sign. Thus we have $A + D - Q - R = C$ and $2 + 6 - 9 - 7 = C = -8$

2. Signs 3. 8 . . . Rearranging, you would have $-C = Q + R - A - D$ $- C = 9 + 7 - 2 - 6 = 8$. To obtain a value for $+C$ without changing the true equality, we would have to change the sign of every term. Hence $+C = -8$.

4. 658 Ω . . . $R_t = R_1 + R_2 + R_3$. Rearranging, $R_3 = R_t - R_1 - R_2$ and $R_3 = 1567\,\Omega - 256\,\Omega - 653\,\Omega = 658\,\Omega$.

5. 37.5 mA . . . Using Kirchhoff's current law, we know that $I_1 + I_2 = I_3 + I_4$. Solving for I_4, $I_4 = I_1 + I_2 - I_3 = 20\text{ mA} + 30\text{ mA} - 12.5\text{ mA}$.

6. 27.2 V . . . Using Kirchhoff's voltage law, we know $E_1 + E_2 = E_3 + E_4$. Solving for E_4, $E_4 = E_1 + E_2 - E_3 = 30\text{ V} + 15\text{ V} - 17.8\text{ V} = 27.2\text{ V}$.

LESSON 2104-1

USING CURVES AND PHASORS

EXAMINATION

Circle the number of the correct answer for each question that follows. When you are finished, transfer the answers to the answer sheet by putting X's in the proper squares. When the graded answer sheet is returned to you, correct in this book any questions you may have missed. By doing so, you will have a record of the correct answers to all questions for review purposes.

$\frac{4 \cdot .3\,x}{1.2 \cdot 7} = 1.2$

1. Given the formula $A = \frac{4KB}{C}$, find the value of K if A is 1.2, B is 0.3, and C is 7.

(1) 0.7 (3) 70 [✓ (5) 7.0]
(2) 4.86 (4) 0.486 (6) 48.6

176
44.4
$\frac{2\pi R N}{W 2} = H\ 88$
$\frac{2\pi R H}{W} = N$
$H = \frac{88.2}{44}$

2. Rearrange the formula $H = \frac{2\pi NR}{W}$ to find the value of N.

(1) $N = \frac{W}{2\pi HR}$ (3) $N = \frac{2HW}{\pi R}$ (5) $N = \frac{2\pi HR}{W}$
(2) $N = \frac{HW}{\pi R}$ [✓ (4)] $N = \frac{HW}{2\pi R}$ (6) $N = \frac{2\pi R}{HW}$

3. An inductance has a reactance of 4500 Ω at a frequency of 5 MHz. What is the inductance?

(1) 14.3 μH [✓ (3) 143 × 10^{-6} H] (5) 0.143 μH
(2) 13.8 × 10^{9} μH (4) 138 × 10^{9} μH (6) 14,300 mH

4. Given the formula $V_t = V_a + V_b - V_c$, find the value of V_c.
   [✓ (1)] $V_c = V_t - V_a - V_b$
   (2) $V_c = \dfrac{V_t}{V_a + V_b}$
   (3) $V_c = V_t + V_a + V_b$
   (4) $V_c = -V_t + V_a - V_b$
   (5) $V_c = V_a - V_t + V_b$
   (6) $V_c = -V_t - V_b + V_a$

5. Given the formula $f_0 = \dfrac{1}{2\pi\sqrt{LC}}$, find the value of L if $f_0 = 500$ kHz and $C = 25\,\mu F$.
   (1) 2.03 mH
   [✓ (2)] 4.06×10^{-9} H
   (3) 0.0406 pH
   (4) 12.7×10^{-9} H
   (5) 1.27×10^{-3} H
   (6) 40.6 μH
   (7) 20.3 mH
   (8) 4.06 mH

?

6. Rearrange the formula $A = B^2CD$ to find the value of B.
   (1) $B = \dfrac{A}{\sqrt{CD}}$
   (2) $B = \dfrac{\sqrt{A}}{CD}$
   [✓ (3)] $B = \sqrt{\dfrac{A}{CD}}$
   (4) $B = \dfrac{A}{CD}$

7. Rearrange the formula $A = B\sqrt{C}$ to find the value of C.
   (1) $C = A^2B^2$
   (2) $C = \dfrac{A}{B^2}$
   [✓ (3)] $C = \dfrac{A^2}{B^2}$
   (4) $C = \dfrac{A^2}{B}$

8. The formula for the energy W in joules stored in an inductor is $W = \dfrac{LI^2}{2}$, where L is in henrys and I is in amperes. What value of current must flow through a 10-H inductor to store 7220 joules of energy?
   [✓ (1)] 38 A
   (2) 19 A
   (3) 3.8 A
   (4) 12 A
   (5) 190 A
   (6) 1.2 A

9. A graph has linear scales if
   [✓ (1)] the curve drawn on the graph is a straight line.
   (2) both scales start at zero.
   (3) the scales have both positive and negative values.
   (4) the scale divisions are equally spaced.

10. In drawing a curve to points plotted by laboratory measurements you should
   (1) be sure that the curve is smooth and passes exactly through every plotted point.
   (2) always use semilogarithmic graph paper.
   [✓ (3)] draw a smooth curve that follows the general trend of the plotted points, but does not necessarily pass through all of them.
   (4) draw the curve so that all the plotted points are a little below the curve.

11. On a graph showing both positive and negative values, negative values are always
    [✓ (1) to the left and below the origin.]
    (2) to the right and below the origin.
    (3) to the left and above the origin.
    (4) to the right and above the origin.

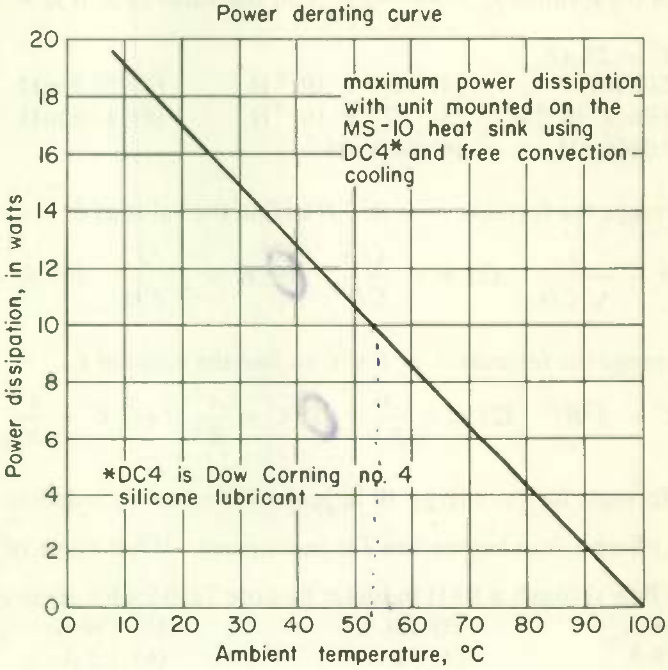

Fig. 32

12. The higher the temperature of the area in which a semiconductor is used, the lower the power the semiconductor can handle without overheating. Manufacturers publish power derating curves that show how the permissible power dissipation decreases with temperature. Figure 32 is the power derating curve for a certain semiconductor device. If the power dissipation for the intended use is 10 W, the temperature where the semiconductor is used (called the ambient temperature) must not be greater than
    (1) 0°C. (2) 19°C. [✓ (3) 53°C.] (4) 60°C. (5) 100°C.

13. The curve in Fig. 32 is known in electronics as a
    [✓ (1) linear curve.] (3) semilogarithmic curve.
    (2) parabolic curve. (4) logarithmic curve.
    (5) none of the above.

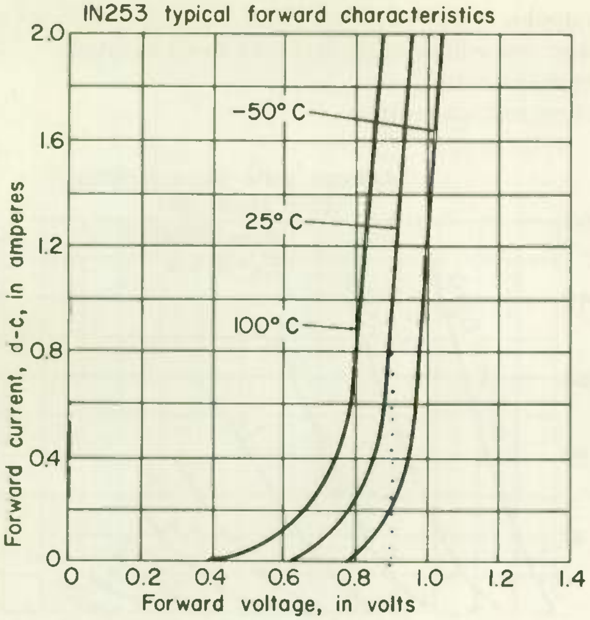

Fig. 33

14. Conducting diodes have a small voltage drop across them. This, of course, is undesirable, since it is a voltage loss to the circuit being fed through the diode. Figure 33 shows that a typical 1N253 diode carrying 800 mA at an operating temperature of 25°C will have a voltage across it of
(1) 0.8 V. [✓ (3) 0.85 V.] (5) 0.97 V.
(2) 0.81 V. (4) 0.9 V.

15. Figure 33 shows that for higher diode temperatures, the conducting voltage loss across the diode is
(1) the same as at lower temperatures.
(2) greater than at lower temperatures.
[✓ (3) less than at lower temperatures.]

16. Figure 33 shows that at a temperature of 25°C the diode will not conduct if the voltage across it is less than about
(1) 0.4 V. (3) 0.8 V. (5) 1.3 V.
[✓ (2) 0.62 V.] (4) 1.04 V.

17. If you double the current through the diode of Fig. 33 (say from 0.8 A up to 1.6 A), then the voltage loss across the diode will

(1) also double.
[✓ (2)] increase but will be much less than twice as much.
(3) more than double.
(4) decrease but not greatly.

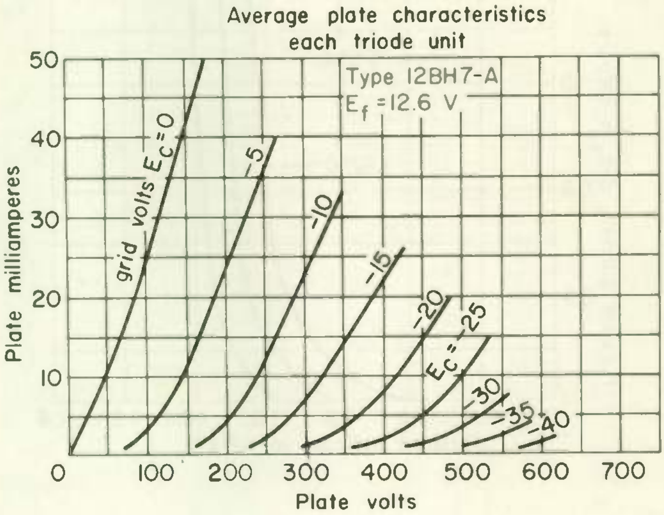

Fig. 34

18. The curve for $E_c = -5$ V in Fig. 34 is
(1) a linear curve.
[✓ (2)] a linear curve for values of plate voltage between 150 and 250 V.
(3) a linear curve for plate voltage values above 50 V.
(4) nonlinear throughout its length.

19. For the tube type 12BH7-A, the curves of which are given in Fig. 34, what is the plate current if the grid bias voltage is -10 V and the plate voltage is 300 V?
(1) 18 mA (2) 33 mA [✓ (3)] 23 mA (4) 7 mA

20. What grid bias voltage is needed for a 12BH7-A tube if the plate current is to be 25 mA when the plate voltage is 250 V?
(1) -7 V [✓ (2)] -9 V (3) -4 V (4) -5.5 V

21. In the type 6AU6A tube, the curves for which are given in Fig. 35, if the grid voltage is kept at -2 V, how does varying the plate voltage affect the plate current?
[✓ (1)] The plate current is approximately the same for any value of plate voltage over 50 V.

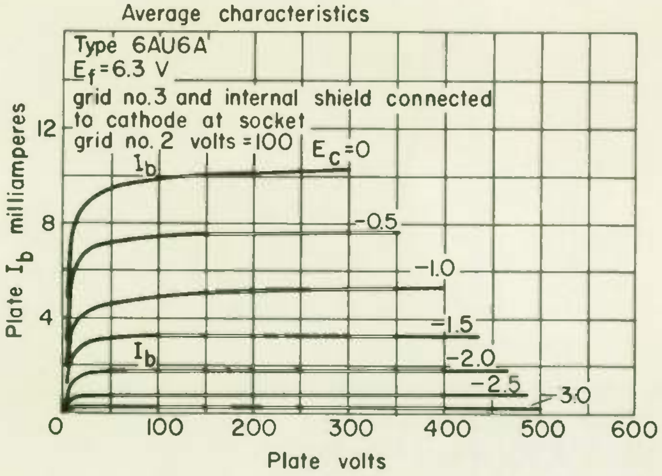

Fig. 35

(2) The plate current is proportional to the plate voltage.
(3) Plate current increases rapidly with increase in plate voltage for all plate voltage values greater than 50 V.
(4) A 100-V change in plate voltage changes the plate current a little less than 2 mA.

22. Vectors are used to represent quantities that
    (1) continuously vary.
    (2) cannot be measured.
    [✓ (3)] have both direction and magnitude.
    (4) have both negative and positive values.

23. What is the largest possible angle?
    (1) An angle can be any size—there is no upper limit.
    (2) 90°   [✓ (3)] 180°   (4) 360°

24. What do we mean by a negative angle?
    (1) One that is less than 0°.
    (2) An angle greater than 90°.
    (3) An angle greater than 180°.
    [✓ (4)] An angle considered as formed by a line rotating clockwise.

25. Three phasors, *A*, *B*, and *C*, are shown in Fig. 36. Phasor *C*
    (1) leads phasor *A* by 80°.
    (2) lags phasor *A* by 80°.
    (3) leads phasor *A* by 120°.
    [✓ (4)] lags phasor *A* by 120°.

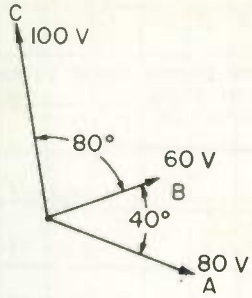

Fig. 36

26. With reference to phasors A and C in Fig. 36, we can also say that
    (1) phasor A leads phasor C by 60°.
    (2) phasor A lags phasor C by 60°.
    (3) phasor A leads phasor C by 240°.
    [✓ (4)] phasor A lags phasor C by 240°.

27. What is the resultant voltage of phasors A and B in Fig. 36? (Ignore phasor C.)
    (1) 121 (2) 125 [✓ (3)] 132 (4) 138 ?

28. In Fig. 36, what is the angle of lead or lag between the resultant of phasors A and B and phasor A?
    [✓ (1)] 17° (2) 32° (3) 21° (4) 13° ?

29. Given the formula $F = \frac{W}{EI}$, find I if $F = 0.667$, $W = 160$, and $E = 30$.
    (1) 0.000139 (3) 0.281 (5) 8 (7) 7200
    (2) 0.125 [✓ (4)] 3.56 (6) 3200 (8) None of the above

30. The formula for magnetomotive force F in gilberts is $F = 1.26NI$, where N is the number of turns and I is the current in amperes. If the current is 4 A, how many turns are required to produce a force of 1000 gilberts?
    [✓ (1)] 198 turns (2) 312 turns (3) 3200 turns (4) 5000 turns
    (5) None of the above

31. Given the formula $M = \frac{4AH^2}{Nb}$, find the value of H if $M = 30$, $A = 40$, $N = 50$, and $b = 2$.
    [✓ (1)] 4.33 (2) 13.7 (3) 18.7 (4) 350
    (5) None of the above

END OF EXAM


CLEVELAND INSTITUTE OF ELECTRONICS

CLEVELAND INSTITUTE OF ELECTRONICS / CLEVELAND, OHIO

electronics

CLEVELAND INSTITUTE OF ELECTRONICS / CLEVELAND, OHIO

Putting Formulas to Work

2101-2

An AUTO-PROGRAMMED™ Lesson

ABOUT THE AUTHOR

Bernard D. Ross, a member of the Technical Staff of Cleveland Institute of Electronics, has had many years of practical experience in electronics. His career has included work as a technician at the Cyclotron and Servomechanisms Laboratories at the Massachusetts Institute of Technology and the Magnetron Laboratory of the Raytheon Company.

Mr. Ross, a former radio ham, graduated from the Electrical Course at Lowell Institute, and attended the Massachusetts Institute of Technology in Electrical Engineering. He served in the Navy during World War II.

The author has been employed as a senior Handbook Writer for the Republic Aviation Corp., Designers for Industry, and Thompson-Ramo-Wooldridge and as assistant editor for Machine Design. He is a member of the Society of Technical Writers and Publishers.

This is an AUTO-PROGRAMMED* Lesson exclusive with the Cleveland Institute of Electronics. It is your assurance of the finest in technical education and training.

**Trademark*

Accredited by the Accrediting Commission
of the National Home Study Council

The Accrediting Commission has been approved by the U.S. Office of Education as a "nationally recognized accrediting agency".

CLEVELAND INSTITUTE OF ELECTRONICS

Putting Formulas to Work

By BERNARD D. ROSS
Technical Staff
Cleveland Institute of Electronics

2101-2

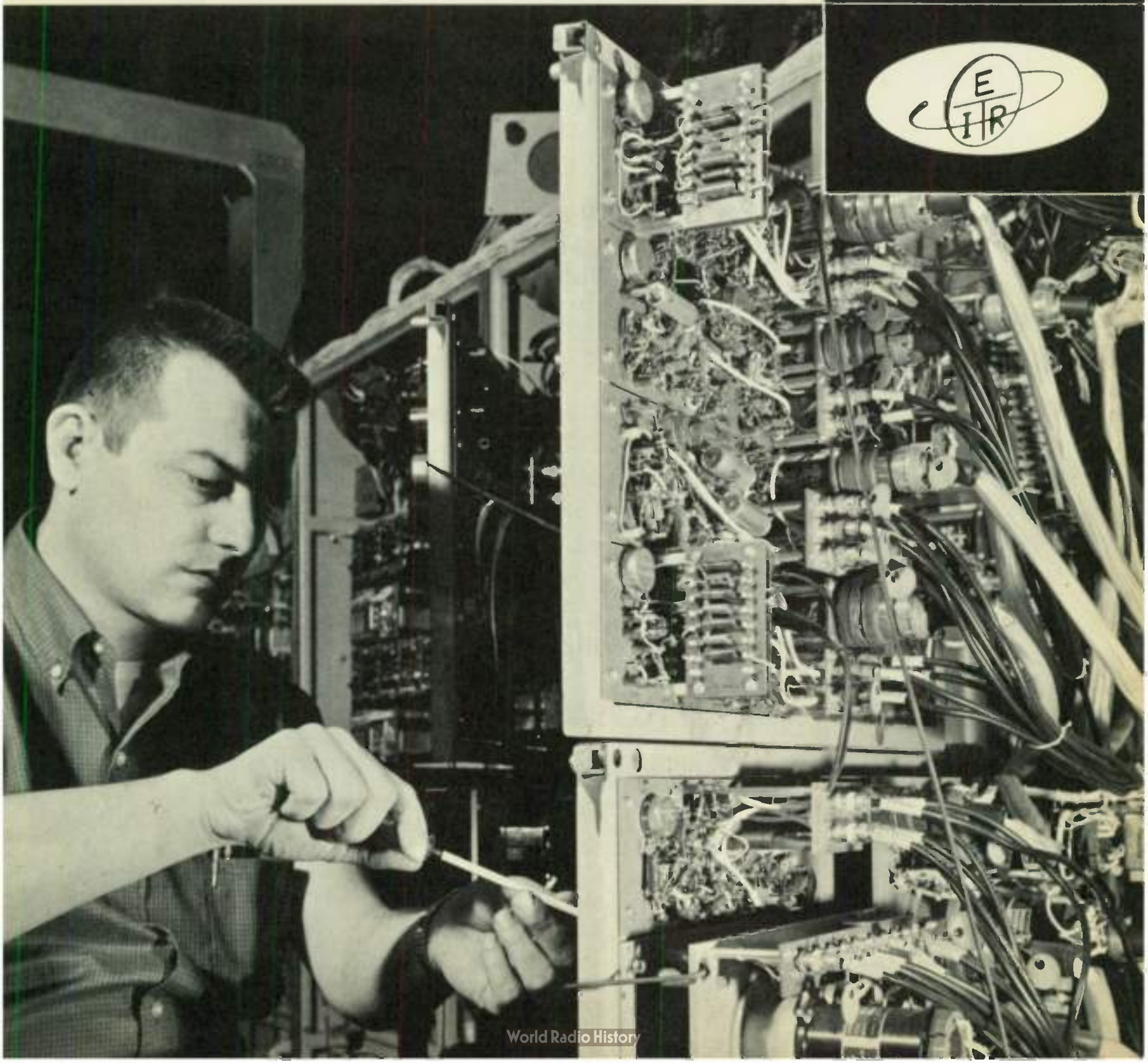

In this lesson you will learn . . .

Frontispiece: *Mathematics will help you in finding trouble in complex circuits like this.*
Courtesy, *Electronics World*

Library of Congress Catalog Card Number: 63-12724

THIRD EDITION/Second Revised Printing/August, 1967.

A chat with your instructor

Mathematics can be fun. You will be surprised to find how easy and pleasant it is to learn mathematics by our teaching methods.

More and more, top success in electronics requires a knowledge of mathematics. This lesson is the most important of the math lessons. That is because you will use the math in this lesson in practically every electronics problem you will ever work.

The most important thing you can learn about mathematics is to check and recheck your work so you are sure your answer is right. Remember that in practical work an incorrect answer is worse than no answer at all. Your employer may rely on your figures and spend much time and money, only to waste both time and money because you made a mistake in your figuring. Don't expect me to give you much credit on a problem because you know how to work it. I want the right answer. You can get it by being neat and careful and by always checking your work.

If you have not yet done so, start the habit now of studying regularly every day; one or two hours a day is enough for good progress.

Remember that I am nere to help you. Don't hesitate to write if there is anything in this lesson that you are unable to understand. You will get a prompt reply.

Putting Formulas to Work

USING FRACTIONS IN ELECTRONICS

Fractions play a most important role in electronics. The expression of Ohm's law for current I, for example is $\frac{E}{R}$, which is, of course, a fraction. Similarly, to determine resistance R, we must solve for another fraction, $\frac{E}{I}$. Nor is the use of fractions confined to Ohm's law. Electronic formulas abound with examples, to which you will be introduced in subsequent lessons, such as $C = \frac{t}{R}$ or $R = \frac{t}{C}$, $I = \frac{P}{E}$ or $E = \frac{P}{I}$, and $X = \frac{1}{\omega C}$ or $C = \frac{1}{\omega X}$, to mention just a few.

1 FRACTION MEANS DIVIDE . . . In a fraction the number above the bar is called the *numerator*, and the number below the bar is called the *denominator*. Thus, in the fraction $\frac{5}{6}$, the numerator is 5 and the denominator is 6. In the fraction $\frac{E}{R}$, the numerator is E and the denominator is R.

One meaning of a fraction is that the numerator is to be divided by the denominator. Thus, $\frac{12}{3}$ means $12 \div 3$, which is 4. $\frac{E}{R}$ means the voltage E is to be divided by the resistance R.

In electronics, division is usually indicated as a fraction. The division sign, ÷, is rarely used. Thus in electronics, instead of $16 \div 2$, we write $\frac{16}{2}$. Similarly, we write $\frac{P}{E}$ rather than $P \div E$.

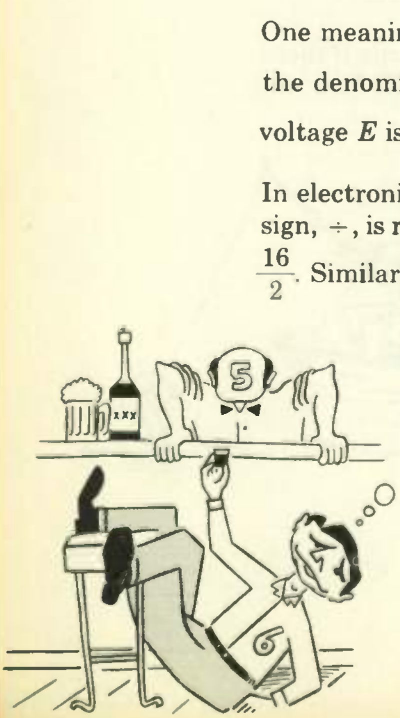

As soon as you answer each question, check with the answer given at the end of this exercise.

1. Change each of the following expressions to an equivalent form which is often used in electronics.

(a) $3 \div 7$ is the same as $\frac{3}{7}$. (d) $1 \div R$ is the same as $\frac{1}{R}$.
(b) $2 \div 3$ is the same as $\frac{2}{3}$. (e) $Q \div 2$ is the same as $Q/2$.
(c) $Q \div C$ is the same as Q/C.

2. Complete the following statements:

(a) The numerator of the fraction $\frac{3}{4}$ is 3. The denominator is 4.

(b) The numerator of the fraction $\frac{R}{Z}$ is R. The denominator is Z.

3. Remembering that "fraction means divide," complete the following:

(a) $\frac{24}{6} =$ 4 (c) $\frac{21}{3} =$ 7 (e) $\frac{54}{9} =$ 6
(b) $\frac{8}{2} =$ 4 (d) $\frac{35}{7} =$ 5

4. If $X = 5$ ohms and $Z = 12$ ohms, the fraction $\frac{X}{Z} =$ .4167 Ω. $\frac{5}{12}$

5. (a) Given the formula $I = \frac{P}{E}$; if $P = 10$ and $E = 5$, $I =$ 2.

(b) Given the formula $R = \frac{t}{C}$; if $t = 2000$ and $C = 4$, $R =$ 500.

(c) Given the formula $E = \frac{Q}{C}$; if $Q = 750$ and $C = 25$, $E =$ 30.

6. (a) The resistance R of a circuit is found by dividing the time constant t by the capacitance C. The formula for resistance R is t/c.

(b) If the time constant is 40 and the capacitance is 2, the resistance R is 20 ohms.

7. (a) The current I in a circuit is found by dividing the power P by the voltage E. The formula for current I is P/E.

(b) If the power is 20 watts and the voltage is 5 volts, the current $I =$ 4 amperes.

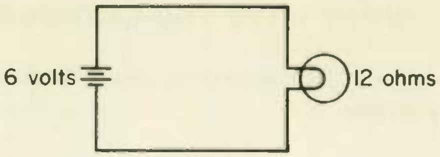

Fig. 1

8. A diagram of a simple lamp circuit is shown in Fig. 1. Current flow is .5 amperes.

ANSWERS

1. (a) $\frac{3}{7}$; (b) $\frac{2}{3}$; (c) $\frac{Q}{C}$; (d) $\frac{1}{R}$; (e) $\frac{Q}{2}$ 2. (a) 3, 4; (b) R, Z

3. (a) 4; (b) 4; (c) 7; (d) 5; (e) 6 4. $\frac{5}{12}$

5. (a) $I = \frac{P}{E} = \frac{10}{5} = 2$; (b) $R = \frac{t}{C} = \frac{2000}{4} = 500$; (c) $E = \frac{Q}{C} = \frac{750}{25} = 30$

6. (a) $R = \frac{t}{C}$; (b) $R = \frac{t}{C} = \frac{40}{2} = 20$

7. (a) $I = \frac{P}{E}$; (b) $I = \quad = \frac{20}{5} = 4$ amp.

8. $\frac{1}{2}$ amp or 0.5 amp . . . From Ohm's law for current, $I = \frac{E}{R} = \frac{6}{12} = \frac{1}{2}$ amp.

2 THE IMPORTANCE OF CORRECT UNITS . . . Before substituting values in a formula, you must check to see that the values are expressed in terms of the units called for by the formula. For example, do not substitute a value for inches when the formula calls for a value for feet.

To illustrate, let us consider the formula for the length of a floor:

$$\text{Length, in feet} = \frac{\text{area, in square feet}}{\text{width, in feet}}$$

It is simpler to write this formula as

$$L = \frac{A}{W}$$

Where L = length, in feet
A = area, in square feet
W = width, in feet

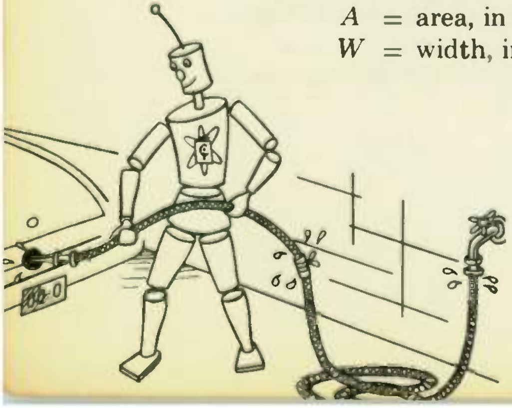

The following illustrates the use of this formula when all quantities are given in the correct units.

Example . . . Find the length of a floor which has an area of 200 sq ft and is 20 ft wide.

Solution . . . The formula calls for the area in square feet and the width in feet. Since $A = 200$ sq ft and $W = 20$ ft, these dimensions are given in the correct units and they can be substituted directly into the formula.

$$L = \frac{A}{W} = \frac{200 \text{ sq ft}}{20 \text{ ft}} = 10 \text{ ft}, \textit{ ans.}$$

The following example illustrates the use of a formula when the quantities are not in the correct units.

Example . . . Find the length, in feet, of a floor when the area is 10 sq yd and the width is 108 in.

Solution . . . $A = 10$ sq yd; $W = 108$ in. Here A is given in square yards instead of square feet as called for by the formula, and W is given in inches instead of feet. Before we attempt to solve for L, we must convert the values for A and W into the units called for by the formula.

To convert A in square yards to A in square feet, we note that

$$1 \text{ sq yd} = 3 \text{ ft} \times 3 \text{ ft} = 9 \text{ sq ft},$$

and therefore

$$A, \text{ in square feet} = 9 \times A, \text{ in square yards} = 9 \times 10 = 90 \text{ sq ft}$$

Similarly, to convert W in inches to W in feet, we note that 1 ft = 12 in, and therefore

$$W, \text{ in feet} = \frac{W, \text{ in inches}}{12} = \frac{108}{12} = 9 \text{ ft}$$

Knowing that $A = 90$ sq ft and $W = 9$ ft, we can now solve the problem:

$$L = \frac{A}{W} = \frac{90 \text{ sq ft}}{9 \text{ ft}} = 10 \text{ ft}, \textit{ ans.}$$

WHAT HAVE YOU LEARNED?

1. (a) If one box weighs 2 lb, and a second box weighs 48 oz, the total weight of the two boxes is __5__ pounds. (There are 16 oz in a pound).
   (b) Converting units to other units is something we do every day. In this problem all units must be converted to cents. A young-

ster carries two dimes, a half dollar, ten pennies, three quarters, and nine nickels to the store. He is carrying Two dollars.

2. The formula for the speed of an automobile is

$$V = \frac{X}{t}$$

where $V =$ speed, in miles per hour
$X =$ distance, in miles
$t =$ time, in hours

The speed of a car which travels 160 miles in 240 min is 40 miles per hour.

3. The formula for the width of a platform is

$$W = \frac{A}{L}$$

where $W =$ width, in yards
$A =$ area, in square yards
$L =$ length in yards

If a platform has an area of 54 sq ft and a length of 72 in., its width is 3 yards.

ANSWERS

1. (a) 5 lbs . . . Since there are 16 oz in a pound, the second box weighs 3 lb.
   (b) \$2 . . . The youngster carries
   2 dimes = \$ .20
   1 half dollar = .50
   10 pennies = .10
   3 quarters = .75
   9 nickels = .45
   \$2.00
2. 40 miles per hr . . . $X = 160$ miles, and time $t = 240$ min, but the problem calls for t in hours. Since there are 60 min in 1 hr, $t = 240$ min $= 240 = 4$ hr.
   Then
   $$V = \frac{X}{t} = \frac{160}{4} = 40 \text{ miles per hr}$$
3. $W = 3$ yd . . . $A = 54$ sq ft, but the formula calls for A in square yards. Since there are 9 sq ft in 1 sq yd, $A = \frac{54}{9} = 6$ sq yd. L is given as 72 in, but the formula calls for this dimension in yards. Since there are 36 in. in a yard,

$L = \frac{72}{36} = 2$ yd. Then

$$W = \frac{A}{L} = \frac{6}{2} = 3 \text{ yd}$$

3 MULTIPLYING IN FORMULAS . . . So far we have discussed only formulas in which the right-hand term is a fraction, such as $C = \frac{t}{R}$ and $f = \frac{V}{\lambda}$. Here we will discuss formulas which make use of multiplication, such as $E = I \times R$, $\omega = \frac{2 \times \pi}{t}$, and $f = \frac{\omega}{2 \times \pi}$.

To indicate multiplication in formulas, it is customary to place the symbols together and *omit the multiplication sign,* ×, *between symbols.* Thus we can write AB rather than $A \times B$, 2π rather than $2 \times \pi$, and $\frac{2\pi f l}{R}$ rather than $\frac{2 \times \pi \times f \times l}{R}$.

Example . . . Let $P = E_1I_1$. If $E_1 = 30$ and $I_1 = 2$, $P =$ ________.

Solution . . . $P = E_1 \times I_1$
$P = 30 \times 2 = 60$, *ans.*

Explanation . . . We rewrite $P = E_1I_1$ as $P = E_1 \times I_1$, since two letters or symbols together without a sign between them should be multiplied.

Example . . . $P = E_1I_1 + E_2I_2$. If $E_1 = 20$, $I_1 = 10$, $E_2 = 5$, and $I_2 = 30$, $P =$ ________.

Solution . . . $P = E_1I_1 + E_2I_2$ (1)
$P = E_1 \times I_1 + E_2 \times I_2$ (2)
$P = 20 \times 10 + 5 \times 30$ (3)
$P = 200 + 150$ (4)
$P = 350$, *ans.* (5)

Explanation . . . Note that we must perform the multiplications before we can add. That is, we first find $E_1 \times I_1$ and $E_2 \times I_2$, as shown in step 4, and then add as in step 5.

Example . . . Let $K = \frac{I_1R_1}{I_2R_2}$. If $I_1 = 5$, $R_1 = 20$, $I_2 = 4$, and $R_2 = 5$, $K =$ ________.

Solution . . . $K = \frac{I_1R_1}{I_2R_2} = \frac{5 \times 20}{4 \times 5} = \frac{100}{20} = 5$, *ans.*

WHAT HAVE YOU LEARNED?

1. Rewrite the following electronic formulas, omitting the multiplication sign:

(a) $Q = C \times E =$ CE

(b) $E = I_1 \times R_1 + I_2 \times R_2 =$ $I_1R_1 + I_2R_2$

(c) $H = \dfrac{4 \times \pi \times N \times i}{L} =$ $\dfrac{4\pi Ni}{L}$

(d) $Xc = \dfrac{1}{2 \times \pi \times f \times C} =$ $\dfrac{1}{2\pi fC}$

2. Complete the following statements:

(a) If $t = RC$, $R = 4000$, and $C = 2$, $t =$ 8000.

(b) If $R = \dfrac{KL}{m}$, $K = 2$, $L = 30$, and $m = 5$, $R =$ 12.

(c) If $I_1 = \dfrac{N_2 I_2}{N_1}$, $N_2 = 5$, $I_2 = 4$, and $N_1 = 10$, $I_1 =$ 2.

(d) If $K = \dfrac{E_1 R_2}{E_2 R_1}$, $E_1 = 3$, $R_2 = 40$, $E_2 = 6$, and $R_1 = 2$, $K =$ 10.

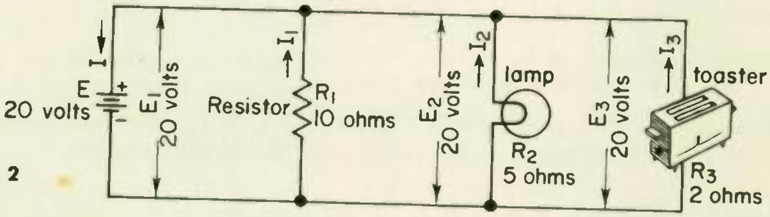

Fig. 2

3. In the diagram shown in Fig. 2, battery voltage E is applied across three circuit elements, a resistor, a lamp, and a toaster. I is the total current supplied by the battery. I_1 is the current flowing through the resistor R_1; I_2 is the current flowing through the lamp R_2; and I_3 is the current flowing through the toaster R_3. If $E = 20$ volts, $R_1 = 10$ ohms, $R_2 = 5$ ohms, and $R_3 = 2$ ohms,

(a) $I_1 =$ 2 AMPS, $I_2 =$ 4 AMPS, $I_3 =$ 10 AMPS (HINT: Use Ohm's law for current.)

(b) $P_1 =$ 40 WATTS $P_2 =$ 80 WATTS, $P_3 =$ 200 WATTS (HINT: Use the formula $P = EI$, where P, in watts, is the power used by the element; E, in volts, is the voltage applied across the element; and I, in amperes, is the current flowing through the element.

(c) Find the total power P used by the three elements. (Use the formula $P = P_1 + P_2 + P_3$.) $P =$ 320 WATTS

(d) The total battery current I is found by the formula $I = I_1 + I_2 + I_3$. $I =$ 16 AMPS

(e) Find the total power supplied by the battery. (Use the formula $P = E\,I$, where P, in watts, is the total power supplied by the battery; E, in volts, is the battery voltage; and I, in amperes, is the total battery current.) $P =$ 320 watts

ANSWERS

1. (a) $Q = CE$; (b) $E = I_1R_1 + I_2R_2$; (c) $H = \frac{4\pi Ni}{L}$; (d) $X_C = \frac{1}{2\pi fC}$
2. (a) 8000 . . . $t = RC = 4000 \times 2 = 8000$
   (b) 12 . . . $R = \frac{KL}{m} = \frac{2 \times 30}{5} = 12$
   (c) 2 . . . $I_1 = \frac{5 \times 4}{10} = \frac{20}{10} = 2$
   (d) 10 . . . $K = \frac{E_1R_2}{E_2R_1} = \frac{3 \times 40}{6 \times 2} = \frac{120}{12} = 10$
3. (a) $I_1 = 2$ amp, $I_2 = 4$ amp, $I_3 = 10$ amp . . . Since $I = \frac{E}{R}$, current through the resistor R_1 is $I_1 = \frac{20}{10} = 2$ amp, current through the lamp R_2 is $I_2 = \frac{20}{5} = 4$ amp, and current through the toaster R_3 is $I_3 = \frac{20}{2} = 10$ amp.
   (b) $P_1 = 40$ watts, $P_2 = 80$ watts, $P_3 = 200$ watts . . . For the resistor, $P_1 = E_1I_1 = 20 \times 2 = 40$ watts. For the lamp, $P_2 = E_2I_2 = 20 \times 4 = 80$ watts. For the toaster, $P_3 = E_3I_3 = 20 \times 10 = 200$ watts.
   (c) 320 watts . . . $P = P_1 + P_2 + P_3 = 40 + 80 + 200 = 320$ watts
   (d) $I = 16$ amp . . . $I = I_1 + I_2 + I_3 = 2 + 4 + 10 = 16$ amp
   (e) 320 watts . . . $E = 20$ volts, $I = 16$ amp, $P = EI = 20 \times 16 = 320$ watts. Note that this answer agrees with the answer to Problem 3(c). This checks that the power supplied by the battery is the same as the total power consumed by the circuit elements.

4 CANCELLATION . . . After the numerical values have been substituted into the fraction of a formula, the work can often be shortened by the use of *cancellation. However, cancellation cannot be used if there is a plus or minus sign in the numerator or denominator.*

Example . . . $\frac{4 \times 7}{7 \times 5} =$ __________

Solution . . . $\frac{4 \times 7}{7 \times 5} = \frac{4}{5}$, *ans.*

Explanation . . . Like terms — 7's in this case — that appear one above and one below the fraction line are canceled (deleted). This leaves in this problem 4 above and 5 below to form the answer.

Example . . . Simplify the following problem by cancellation:

$\frac{6 \times 7}{6 + 1} =$ __________

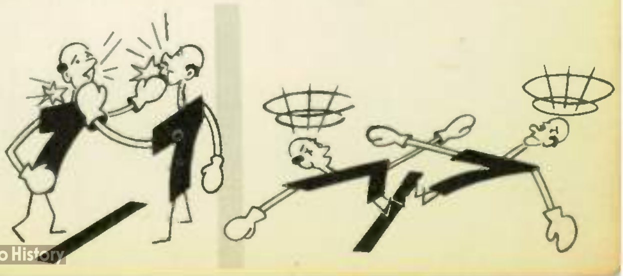

Solution . . . $\frac{6 \times 7}{6 + 1} = \frac{6 \times \cancel{7}}{\cancel{7}} = 6$, *ans.*

Explanation . . . The problem, as stated, cannot be immediately solved by cancellation because the denominator contains an addition sign, +. Therefore, we must first eliminate the plus sign by adding the 1 to the 6. Then cancellation can be used.

Cancellation is not limited to deleting like terms as in the examples above. You may also cancel by dividing any two terms, one in the numerator and one in the denominator, by any number that will divide evenly into the two terms.

Example . . . $\frac{3 \times 2 \times 5 \times 7}{4 \times 3 \times 7 \times 3} =$ __________

Solution . . . $\frac{\cancel{3} \times \overset{1}{2} \times 5 \times \cancel{7}}{\underset{2}{\cancel{4}} \times \cancel{3} \times \cancel{7} \times 3} = \frac{1 \times 5}{2 \times 3} = \frac{5}{6}$, *ans.*

Explanation . . . We can cancel the two 3's and two 7's because a 3 and a 7 appear both above and below the fraction line. But we can also cancel further. Notice that a 2 appears above the fraction line and a 4 appears below. Dividing each number by 2, we cross out the 2 above the fraction line and mark a "1" above it, showing that $\frac{2}{2} = 1$. In the same way, we draw a line through the 4, but place a 2 below it, indicating that $\frac{4}{2} = 2$.

Example . . . $\frac{7 \times 5 \times 6}{9 \times 7 \times 4} =$ __________

Solution . . . $\frac{\cancel{7} \times 5 \times \overset{\overset{1}{2}}{\cancel{6}}}{\underset{3}{\cancel{9}} \times \cancel{7} \times \underset{2}{\cancel{4}}} = \frac{5 \times 1}{3 \times 2} = \frac{5}{6}$

Explanation . . . Since one 7 appears above the fraction line and another below, the 7's can immediately be canceled. Thus the fraction becomes $\frac{5 \times 6}{9 \times 4}$. To cancel further, note that the 6 in the numerator and the 9 in the denominator are each divisible by 3. Canceling gives us

$$\frac{5 \times \overset{2}{\cancel{6}}}{\underset{3}{\cancel{9}} \times 4}$$

and since the 2 in the numerator and 4 in the denominator are both divisible by 2, we get

$$\frac{5 \times \overset{\overset{1}{\cancel{2}}}{\cancel{6}}}{\underset{3}{\cancel{9}} \times \underset{2}{\cancel{4}}} = \frac{5 \times 1}{3 \times 2} = \frac{5}{6}$$

WHAT HAVE YOU LEARNED?

1. Simplify the following problems by cancellation (when possible):

(a) $\frac{3 \times 5}{5 \times 4} =$ ______ (e) $\frac{8 \times 11 \times 6}{9 \times 4 \times 11} =$ ______

(b) $\frac{9 \times 3}{13 \times 7} =$ ______ (f) $\frac{2 \times 3 \times 4 \times 9}{6 \times 7 \times 9 \times 2} =$ ______

(c) $\frac{4 \times 3}{9 \times 8} =$ ______ (g) $\frac{2 + 4 - 1}{7 \times 5} =$ ______

(d) $\frac{7 + 14}{7 \times 9} =$ ______ (h) $\frac{RCE}{CEQ} =$ ______

2. Let $I_1 = \frac{I_2 N_2}{N_1}$. If $I_2 = 2$, $N_2 = 10$, and $N_1 = 2$, $I_1 =$ ______.

3. If $X = \frac{3LW}{4GH}$, $L = 4$, $W = 7$, $G = 7$, and $H = 6$, $X =$ ______.

ANSWERS

1. (a) $\frac{3}{4} \ldots \frac{3 \times \cancel{5}}{\cancel{5} \times 4} = \frac{3}{4}$ . . . The 5's can be canceled because they appear above and below the fraction line.

(b) $\frac{27}{91} \ldots \frac{9 \times 3}{13 \times 7} = \frac{27}{91}$ . . . The numbers in this problem do not yield to cancellation because (1) no number is repeated in the numerator and denominator; (2) no whole number (except 1) can be divided into a term in the numerator and one in the denominator.

(c) $\frac{1}{6} \ldots \frac{\overset{1}{\cancel{4}} \times \overset{1}{\cancel{3}}}{\underset{3}{\cancel{9}} \times \underset{2}{\cancel{8}}} = \frac{1 \times 1}{3 \times 2} = \frac{1}{6}$

(d) $\frac{1}{3} \ldots \frac{7 + 14}{7 \times 9} = \frac{\overset{1}{\cancel{21}}}{\underset{3}{\cancel{63}}} = \frac{1}{3}$. Because there is a plus sign in the numerator we must add before we can cancel.

(e) $\frac{4}{3} \ldots \frac{\overset{2}{\cancel{8}} \times \cancel{11} \times \overset{2}{\cancel{6}}}{\underset{3}{\cancel{9}} \times \underset{1}{\cancel{4}} \times \cancel{11}} = \frac{2 \times 2}{3 \times 1} = \frac{4}{3}$

(f) $\frac{2}{7}\ldots\frac{\cancel{2}\times\overset{1}{\cancel{3}}\times\overset{2}{\cancel{4}}\times\cancel{9}}{\underset{2}{\cancel{6}}\times 7\times\cancel{9}\times\cancel{2}}=\frac{1\times 2}{7}=\frac{2}{7}$

(g) $\frac{1}{7}\ldots\frac{2+4-1}{7\times 5}=\frac{6-1}{7\times 5}=\frac{\overset{1}{\cancel{5}}}{7\times\cancel{5}}=\frac{1}{7}$. Eliminate the addition and subtraction signs before attempting to cancel.

(h) $\frac{R}{Q}\ldots\frac{R\cancel{C}\cancel{E}}{\cancel{C}\cancel{E}Q}=\frac{R}{Q}$. Both the *C*'s and *E*'s can be canceled because both a *C* and an *E* appear above and below the fraction line.

2. 10 ... $I_1=\frac{I_2N_2}{N_1}=\frac{\cancel{2}\times 10}{\cancel{2}}=10$

3. $X=\frac{1}{2}\ldots X=\frac{\overset{1}{\cancel{3}}\times\cancel{4}\times\cancel{7}}{\cancel{4}\times\cancel{7}\times\underset{2}{\cancel{6}}}=\frac{1}{2}$

HOW DECIMALS ARE USED IN ELECTRONICS

5 MEANING OF DECIMALS ... Many quantities in electronics are expressed in terms of decimals. A decimal is a fraction whose denominator is either 10 or the product of one or more 10's. Thus, the denominator may be 100, 1000, 10,000, 100,000, etc. Decimals may be written in fraction form as

$$\frac{3}{10} \quad \frac{5}{10} \quad \frac{3}{100} \quad \frac{25}{100} \quad \frac{167}{1000} \quad \frac{2755}{10{,}000} \quad \text{etc.}$$

The denominator of a decimal is usually not written out; instead, it is indicated by the use of a *decimal point.* Thus, the decimals given in the preceding paragraph in fraction form would be written as 0.3, 0.5, 0.03, 0.25, 0.167, and 0.2755.

If a number is mixed—that is, contains both a whole number and a fraction—the whole number is written in front of the decimal point and the fraction is written after the decimal point. For example, $2\frac{5}{10}$ is written in decimals as 2.5.

The rule for locating the decimal point is very important and should be memorized: *In a decimal, the number of digits after the decimal point is equal to the number of zeros in the unwritten denominator.*

Thus, the decimal 0.7 indicates there is one zero in the denominator, or the decimal could be written in fraction form as $\frac{7}{10}$. The mixed number 1.82, with two digits after the decimal point, could be written as $1\frac{82}{100}$. The decimal 7.045, which has three digits after the decimal point could be written as $7\frac{45}{1000}$, which has three zeros in the denominator.

Adding or removing zeros from the end of a decimal does not change its value. Thus, 7.30 may be rewritten 7.3, 7.300, 7.3000, 7.30000, etc.

WHAT HAVE YOU LEARNED?

1. Write the following in fractional form. (HINT: *The number of zeros in the denominator* of the fraction must equal the *number of digits after the decimal point* in the decimal.)

(a) 0.7 = ______ (d) 0.73 = ______ (g) 2.08 = ______
(b) 0.07 = ______ (e) 0.073 = ______ (h) 4.3 = ______
(c) 0.007 = ______ (f) 0.743 = ______

2. Express the following in decimal form:

(a) A tenth of a dollar = $ ______
(b) A half of a dollar = $ ______
(c) A quarter of a dollar = $ ______
(d) $\frac{1}{10}$ of an ohm = ______ ohm
(e) $\frac{3}{10}$ of an ampere = ______ ampere
(f) $\frac{75}{1000}$ of a volt = ______ volt
(g) $\frac{375}{1000}$ of an inch = ______ inch
(h) $\frac{2}{1,000,000}$ of an ampere = ______ ampere
(i) $\frac{432}{10,000}$ of a megacycle = ______ megacycle

ANSWERS

1. (a) $\frac{7}{10}$; (b) $\frac{7}{100}$; (c) $\frac{7}{1000}$; (d) $\frac{73}{100}$; (e) $\frac{73}{1000}$; (f) $\frac{743}{1000}$;

(g) $\frac{208}{100}$ or $2\frac{8}{100}$; (h) $\frac{43}{10}$ or $4\frac{3}{10}$

2. (a) \$.10 or $\frac{10}{100}$ of a dollar; (b) \$.50
   (c) \$.25 or $\frac{25}{100}$ of a dollar; (d) 0.1 ohm; (e) 0.3 amp
   (f) 0.075 volt . . . The number of digits after the decimal point must equal the number of zeros in the denominator of the fraction.
   (g) 0.375 in.; (h) 0.000002 amp; (i) 0.0432 megacycle

6 ADDING AND SUBTRACTING DECIMALS . . . To add or subtract decimals, write the numbers so that the decimal points are located directly under each other and then proceed as with whole numbers. Place the decimal point in the answer under the other decimal points.

EXAMPLE . . . 41.67 + 0.5 + 200 + 3.425 = ____________

SOLUTION . . .

$$\begin{array}{r} 41.670 \\ 0.500 \\ 200.000 \\ 3.425 \\ \hline 245.595 \end{array}$$

245.595, *ans.*

EXPLANATION . . . The numbers are written with the decimal points located directly under each other. Zeros have been added at the ends of figures so that each figure will have the same number of decimal places. As stated in the preceding section, adding or removing zeros after a decimal will not change the value of the decimal. As shown above, adding zeros is sometimes a useful device because the values of the decimals in relation to each other can be more easily seen.

WHAT HAVE YOU LEARNED?

1. (a) 47 + 0.003 = __________
   (b) 21.611 + 6888.32 + 3.4167 = ________________
   (c) 37.1065 + 432.07 + 4.20733 + 11.706 = ________________
   (d) 21.611 − 8.78 = ________________
   (e) 53 − 0.0501 = ________________
   (f) 10 − 2.32 + 5 = ________________ (HINT: Note that two operations, addition and subtraction, are involved.)
   (g) Which is the larger number, 3.31 or 3.297?
   (h) Which is the larger number, 4.03 or 4.005?

2. (a) If $R = R_1 + R_2 + R_3$, and if $R_1 = 7.23$ ohms, $R_2 = 47{,}000$ ohms, and $R_3 = 36.98$ ohms, $R =$ ________________.

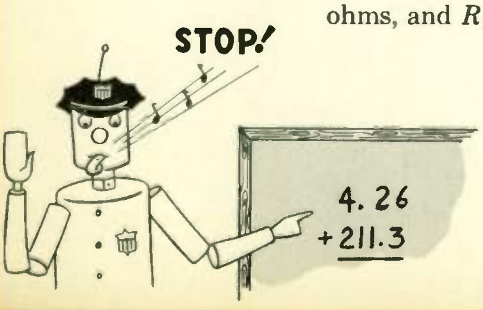

(b) If $I = I_1 + I_2 - I_3$, and if $I_1 = 2.5$ amp, $I_2 = 14.93$ amp, and $I_3 = 7.938$ amp, $I =$ ______________ .

(c) If $P = P_1 - P_2$, and if $P_1 = 23{,}748.92$ watts and $P_2 = 14{,}621.436$ watts, $P =$ ______________ .

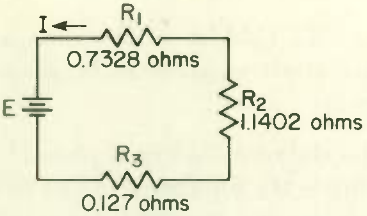

Fig. 3

3. (a) In the diagram shown in Fig. 3, if $R = R_1 + R_2 + R_3$, $R =$ ______________ .

(b) Since $E = IR$, if $I = 10$, $E =$ ______________ .

(c) If power $P = EI$, $P =$ ______________ .

ANSWERS

1. (a) 47.003 . . .

$$\begin{array}{r} 47.000 \\ .003 \\ \hline 47.003 \end{array}$$

In any whole number, such as 47, the decimal point is considered to be at the end of the number. As an aid in adding, zeros have been placed after the decimal point which follows 47.

(b) 6913.3477 . . .

$$\begin{array}{r} 21.6110 \\ 6888.3200 \\ 3.4167 \\ \hline 6913.3477 \end{array}$$

(c) 485.08983 . . .

$$\begin{array}{r} 37.10650 \\ 432.07000 \\ 4.20733 \\ 11.70600 \\ \hline 485.08983 \end{array}$$

(d) 12.831 . . .

$$\begin{array}{r} 21.611 \\ -8.780 \\ \hline 12.831 \end{array}$$

(e) 52.9499 . . .

$$\begin{array}{r} 53.0000 \\ -.0501 \\ \hline 52.9499 \end{array}$$

(f) 12.68 . . . $10 - 2.32 + 5 = 10 + 5 - 2.32 = 15 - 2.32 = 12.68$. In the solution shown, the numbers to be added, 5 and 10, are combined first, then from this sum, which is 15, the number 2.32 is subtracted.

(g) 3.31 . . . To see whether 3.31 or 3.297 is larger, add zeros to the end of 3.31 to have an equal numer of decimal places for both numbers. This gives 3.310 as compared with 3.297. We see immediately that while both numbers contain the same whole number, 3, one whole number is followed by 310 one-thousandths and the other by only 297 one-thousandths. Therefore, 3.31 is the larger of the two numbers.

(h) 4.03 . . . 4.030 versus 4.005, or 30 one-thousandths versus 5 one-thousandths.

2. (a) 47,044.21 ohms

(b) 9.492 amp . . .

$$\begin{array}{r} 2.50 \\ +14.93 \\ \hline 17.43 \end{array} \qquad \begin{array}{r} 17.430 \\ -7.938 \\ \hline 9.492 \end{array} \text{ amp}$$

(c) 9127.484 watts

3. (a) $R = 2.0$ ohms . . . 0.7328

$$\begin{array}{r} 0.7328 \\ 1.1402 \\ \underline{0.1270} \\ 2.0000 \text{ ohms} \end{array}$$

(b) $E = 20$ volts . . . $E = 10 \times 2 = 20$ volts

(c) $P = 200$ watts . . . $P = EI = 20 \times 10 = 200$ watts

7 MULTIPLYING DECIMALS . . . Decimals are multiplied like whole numbers, but special attention must be given to placing the decimal point in the answer.

First, let us define the term "decimal places." The number of decimal places in any figure is the number of digits to the right of the decimal point. Thus, there are two decimal places in the figure 41.28, for example, because there are two digits to the right of the decimal point. Similarly, there are three decimal places in the figure 4210.438, four decimal places in the figure 38.4321, etc.

To multiply decimals, the number of *decimal places in the answer* must equal the *sum* of the *decimal places in the number being multiplied* and the *decimal places in the multiplier.*

Example . . . $20.1 \times 32.54 =$ __________

Solution . . .

$$\begin{array}{r} 20.\textcircled{1} \longleftrightarrow 1 \text{ place} + 2 \text{ places} = 3 \text{ places} \\ 32.\boxed{54} \longleftarrow \\ \hline 804 \\ 1005 \\ 402 \\ 603 \\ \hline 654.\boxed{054} \textit{ ans.} \end{array}$$

Explanation . . . Decimals are multiplied like whole numbers. To place the decimal point in the answer, we note that there is one decimal place in the number being multiplied and that there are two decimal places in the multiplier. Therefore, there must be three decimal places in the answer, and we place the decimal point accordingly.

Example . . . $21.32 \times 1.325 =$ __________

Solution . . .

$$\begin{array}{r} 21.32 \\ 1.325 \\ \hline 10660 \\ 4264 \\ 6396 \\ 2132 \\ \hline 28.24900 = 28.249, \textit{ ans.} \end{array}$$

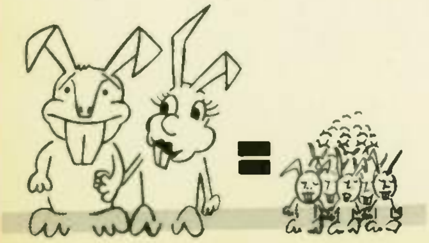

Explanation . . . Since there are two decimal places in the number being multiplied and three decimal places in the multiplier, there must be five decimal places in the answer. **Note**: Do not remove the zeros from the end of the answer until the decimal point has been located.

Example . . . 0.0423 × 0.00253 = ____________

Solution . . .

$$\begin{array}{r}
0.0423\\
\underline{0.00253}\\
1269\\
2115\\
846\\
\hline
0.000107019
\end{array}$$

ans.

Explanation . . . Note that the multiplication of numbers yields a 6-digit figure, 107019. But since there are four decimal places in the number being multiplied and five decimal places in the multiplier, there must be a total of nine decimal places in the answer. Therefore, we add three zeros *before* the figure 107019 to locate the decimal point.

WHAT HAVE YOU LEARNED?

1. Indicate the number of decimal places in each of the following numbers:

(a) 31.29
(b) 12.2
(c) 479.030
(d) 0.70831
(e) 0.00059
(f) 0.0089276100
(g) 3.14159265

2. Find E, in volts, when
   (a) $I = 2.1$ amp; $R = 7$ ohms
   (b) $I = 15.2$ amp; $R = 57.31$ ohms
   (c) $I = 21.29$ amp; $R = 2.934$ ohms
   (d) $I = 0.00152$ amp; $R = 0.0743$ ohms

3. Find P, in watts, when
   (a) $I = 2.75$ amp; $E = 5$ volts
   (b) $I = 29.3$ amp; $E = 75.79$ volts
   (c) $I = 1.534$ amp; $E = 0.00345$ volts

ANSWERS

1. (a) Two . . . There are two decimal places in 31.29 because there are two digits to the right of the decimal point.
(b) One; (c) three; (d) five; (e) five; (f) ten; (g) eight

2\. (a) 14.7 volts . . . $E = IR = 2.1 \times 7 = 14.7$ volts

(b) 871.112 volts . . . $E = IR = 15.2 \times 57.31$

$$\begin{array}{r} 57.31 \\ 15.2 \\ \hline 11462 \\ 28655 \\ 5731 \\ \hline 871.112 \end{array}$$

Because there are two decimal places in the number to be multiplied and there is one decimal place in the multiplier, there must be three decimal places in the answer.

(c) 62.46486 . . . $E = IR = 21.29 \times 2.934 = 62.46486$ volts

(d) 0.000112936 volts . . . $E = IR = 0.00152 \times 0.0743$

$$\begin{array}{r} .00152 \\ .0743 \\ \hline 456 \\ 608 \\ 1064 \\ \hline 0.000112936 \end{array}$$

There are five decimal places in the number to be multipled and four decimal places in the multiplier. Hence, there must be nine decimal places in the answer. To locate the decimal point, we add three zeros before the number 112936.

3\. (a) 13.75 watts . . . $P = EI = 2.75 \times 5 = 13.75$ watts

(b) 2220.647 watts; (c) 0.00529230 watts or 0.0052923 watts . . . Zeros at the end of a decimal value have no meaning and so can be dropped.

8 CHECKING DECIMAL POINT LOCATION . . . An answer in which the decimal point is incorrectly located is useless. In fact, it can lead to further errors. To guard against such a mistake, after working each multiplication problem involving decimals you should verify that the decimal point is correctly located.

For example, if we multiply 2.17 by 12.23 correctly, we will obtain 26.5391. To verify the location of the decimal point, we notice that 2.17×12.23 is very roughly equal to 2×12, or 24. This is in rough agreement with the answer and therefore checks the placement of the decimal point. If the answer to the check had been 2.4 or 240, it would have shown that the answer to the problem was wrong, because there would then be a very great difference between the two answers.

EXAMPLE . . . $1.42 \times 2.97 =$ ____________

SOLUTION . . .

$$\begin{array}{r} 1.42 \\ 2.97 \\ \hline 994 \\ 1278 \\ 284 \\ \hline 4.2174 \end{array}$$

ans.

EXPLANATION . . . To check the position of the decimal point, we can see that 1.42×2.97 is very roughly equal to $1 \times 3 = 3$. Since the answer to the check problem is 3 as compared with the answer to the real problem of 4.2174 (and

not, for example, 10 times as much or only $\frac{1}{10}$ as much), we can conclude the decimal point is correctly placed.

WHAT HAVE YOU LEARNED?

1. Check the location of the decimal points in the following problems and note whether they are right or wrong. If wrong, relocate the decimal point to its correct position.
   (a) 7.2 × 1.1 = 79.2
   (b) 21.75 × 33.96 = 738.63
   (c) 246.795 × 0.00753 = 18.5836635

2. Mentally position the decimal point:
   (a) 11.1 × 10.3 = 11433
   (b) 0.25 × 82.4 = 20600
   (c) 0.012 × 0.473 = 5676

ANSWERS

1. (a) Wrong; should be 7.92 ... To check position of the decimal point, multiply 7 × 1 = 7. This check shows the final decimal should be much smaller than 79.2.
   (b) Right ... To check, multiply approximately comparable figures, such as 20 × 30. This gives 600, which is in hundreds, as is the answer.
   (c) Wrong; should be 1.85836635 ... To check, use a sample problem such as 200 × 0.007 = 1.4. This shows an answer of 18+ is much too high.
2. (a) 114.33 ... Check: 11 × 10 = 110
   (b) 20.6 ... Check: 0.2 × 80 = 16
   (c) 0.005676 ... Check: 0.01 × 0.5 = 0.005

9 MULTIPLYING BY 10'S

... In electronics, it is very often useful to be able to multiply quickly by 10,000, 1000, etc.

To multiply any number by 10, simply move the decimal point over one place to the right; to multiply by 100, move the decimal point two places to the right; to multiply by 1000, move the decimal point three places to the right, etc. In other words, *move the decimal point one place to the right for each zero in the multiplier.*

Example ... 4 × 100 = ________

Solution ... 400

Explanation ... Because there are two zeros in 100, move the decimal point

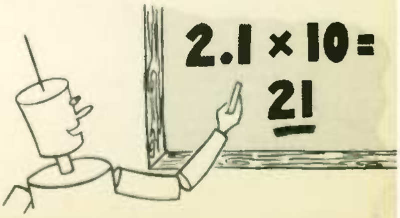

two places to the right. Since 4 may be written 4.00,

$$100 \times 4 = 100 \times 4.00 = 400$$

EXAMPLE . . . 26.3578 × 1000 = __________.

SOLUTION . . . 26,357.8

EXPLANATION . . . The multiplier 1000 contains three zeros, and we therefore move the decimal point in 26.3578 three places to the right.

WHAT HAVE YOU LEARNED?

1. Use the procedure for multiplying by 10's to solve the following problems:
   (a) 6.875 × 100 = __________
   (b) 1000 × 41.286 = __________
   (c) 6 × 10,000 = __________
   (d) 0.0047 × 10 = __________
   (e) 0.00251 × 10,000 = __________
   (f) 247.1 × 1000 = __________
   (g) 1000 × 1000 = __________

2. A given voltage applied across a circuit causes a current of 2 ma to flow. Raising this voltage to 1000 times its original value increases the current 1000 times. The new value of current is ________ milliamperes.

3. The lowest frequency, f_1 to which a certain loudspeaker will respond is 100 cps.
   (a) When f_1 is multiplied by 100, the new frequency, ________ cycles per second, can still be heard as a sound.
   (b) When f_1 is multiplied by 10,000, the new frequency, ________ cycles per second, falls within the standard broadcast band.
   (c) When f_1 is multiplied by 100,000, the new frequency, ________ cycles per second, is one used by station WWV, of the National Bureau of Standards.

ANSWERS

1. (a) 687.5 . . . 6.875 × 100 = 687.5. Move the decimal point one place to the right for each zero in the multiplier.
   (b) 41,286 . . . 1000 × 41.286 = 41, 286
   (c) 60,000 . . . 6 × 10,000 = 6.0000 × 10,000 = 60,000. In any whole num-

ber, the decimal point is considered to be at the end of the number. Also, zeros can be added to the end of any decimal without changing its value.

(d) 0.047 . . . 0.0047 × 10 = 0.047. Because the multiplier (for convenience, we consider 10 to be the multiplier) contains one zero, we move the decimal point one place to the right.

(e) 25.1 . . . 0.00251 × 10,000 = 0.00251 = 25.1 Here we have indicated graphically how the decimal point is moved four places to the right.

(f) 247,100 . . . 247.1 × 1000 = 247.100 = 247,100. After adding zeros at the end of the number to be multiplied, we move the decimal point three places to the right.

(g) 1,000,000 . . . 1000 × 1000 = 1000.000 = 1,000,000

2. 2000 . . . Increasing the voltage increases the current 1000 times. Since the original current was 2 ma, 1000 × 2 = 2000 ma.

3. (a) 10,000 . . . 100 × 100 = 10,000 cps

(b) 1,000,000 . . . 100 × 10,000 = 100.0000 = 1,000,000 cps

(c) 10,000,000 . . . 100 × 100,000 = 100.00000 = 10,000,000 cps

10 MULTIPLYING BY 0.1, 0.01, 0.001, ETC.

. . . Just as it is important to be able to multiply quickly by 10's, 100's etc., so it is important to be able to multiply quickly by tenths, hundredths, thousandths, etc.

To multiply by 0.1, 0.01, 0.001, 0.0001, etc., *move the decimal point one place to the left* in the number being multiplied *for each digit to the right of the decimal point* in the multiplier.

Example . . . 32.68 × 0.01 = ____________

Solution . . . 0.3268, *ans.*

Explanation . . . Since there are two digits to the right of the decimal point in the multiplier, the decimal point in the number being multiplied must be moved two places to the left.

Example . . . 427 × 0.00010 = ____________

Solution . . . 427 × 0.0001 = 0.0427, *ans.*

Explanation . . . First remove all zeros from the end of the multiplier. Because there are four digits remaining to the right of the decimal point in the multiplier, we must move the decimal point in the number 427 four places to the left. To move the decimal point four places to the left, we must add a zero between 427 and the decimal point.

WHAT HAVE YOU LEARNED?

1. Use the procedure for multiplying by tenths, hundredths, etc. to solve the following problems.

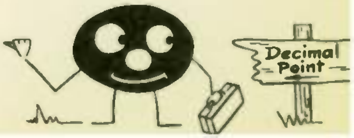

(a) 4.7 × 0.1 = __________
(b) 237 × 0.1 = __________
(c) 0.035 × 0.1 = __________
(d) 63,000 × 0.01 = __________
(e) 7 × 0.001 = __________
(f) 23 × 1000 × 0.001 = __________
(g) 23 × 1000 × 0.00001 = __________
(h) 0.1 × 0.1 = __________
(j) 100 × 0.01 = __________
(k) 0.00251 × 10,000 = __________
(l) 0.178 × 0.0001 = __________

2. A useful relation to know is that 1 amp = 1000 ma. (HINT: To convert amperes to milliamperes, multiply by 1000.)

(a) 2 amp = __________ milliamperes
(b) 0.5 amp = __________ milliamperes
(c) 2.5 amp = __________ milliamperes
(d) 17.6 amp = __________ milliamperes

3. Since 1 amp = 1000 ma, 1 ma must equal $\frac{1}{1000}$ amp = 0.001 amp. (HINT: To convert milliamperes to amperes, multiply by 0.001.)

(a) 1 ma = __________ ampere (d) 2000 ma = __________ amperes
(b) 2 ma = __________ ampere (e) 3500 ma = __________ amperes
(c) 500 ma = __________ ampere (f) 6326 ma = __________ amperes

4. (a) In a d-c circuit, if $E = 20$ volts and $R = 200$ ohms, $I =$ __________ ampere = __________ milliamperes.
(b) If $E = 3$ volts and $R = 6$ ohms, $I =$ __________ milliamperes.
(c) If $E = 10$ volts and $R = 10{,}000$ ohms, $I =$ __________ milliamperes.

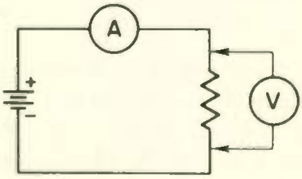

Fig. 4

5. In Fig. 4, meter A reads the current flow through the resistor R, and voltmeter V reads the voltage drop across R.

(a) If the current reading is 10 ma and $R = 50{,}000$ ohms, the voltmeter reading is __________ volts.
(b) If the current reading is 5 ma and $R = 50{,}000$ ohms, the voltmeter reading is __________ volts.
(c) If the current reading is 50 ma and $R = 82$ kilohms, the volt-

meter reading is ________ kilovolts. (HINT: 1 ma = 0.001 amp, 1 kilohm = 1000 ohms, and 1 kv = 1000 volts.)

ANSWERS

1. (a) 0.47 . . . 4.7 × 0.1 = 0.47. Because there is one digit to the right of the decimal point in the multiplier, 0.1, we must move the decimal point one place to the left in the number being multiplied, 4.7.
   (b) 23.7 . . . 237 × 0.1 = 23.7 (c) 0.0035 . . . 0.035 × 0.1 = 0.0035
   (d) 630 . . . 63,000 × 0.01 = 630.00 = 630. Here there are two digits to the right of the decimal point in the multiplier, 0.01. Hence, we move the decimal point to the number being multiplied two places to the left.
   (e) 0.007 . . . 7 × 0.001 = 0.007. To move the decimal point three places to the left in the number being multiplied, 7, we must place two zeros before the number.
   (f) 23 . . . 23 × 1000 × 0.001 = 23,000 × 0.001 = 23.000 = 23. Notice that the final answer is the same as the original number to be multiplied. This is because 1000 × 0.001 = 1.
   (g) 0.23 . . . 23 × 1000 × 0.00001 = 23,000 × 0.00001 = 0.23
   (h) 0.01 (j) 1 . . . 100 × 0.01 = 1 (k) 25.1 . . . 0.00251 × 10,000 = 25.1
   (l) 0.0000178 . . . 0.178 × 0.0001 = 0.0000178. Because there are four digits to the right of the decimal point in the multiplier, 0.0001, we must move the decimal point in the number 0.178 four places to the left. We add four zeros before the number to locate the decimal point.
2. (a) 2000 ma . . . 2 amp × 1000 = 2000 ma
   (b) 500; (c) 2500; (d) 17,600
3. (a) 0.001 amp . . . 1 ma × 0.001 = 0.001 amp
   (b) 0.002 (c) 0.5 amp . . . 500 × 0.001 = 0.5 amp
   (d) 2; (e) 3.5; (f) 6.326
4. (a) 0.1 amp, 100 ma . . . Use the formula,

$$I = \frac{E}{R} = \frac{20}{200} = \frac{1}{10} = 0.1 \text{ amp} \qquad 0.1 \text{ amp} \times 1000 = 100 \text{ ma}$$

   (b) 500 ma . . .

$$I = \frac{E}{R} = \frac{3}{6} = 0.5 \text{ amp} \qquad 0.5 \times 1000 = 500 \text{ ma}$$

   (c) 1 ma . . .

$$I = \frac{E}{R} = \frac{10}{10{,}000} = \frac{1}{1000} \text{ amp} = 1 \text{ ma}$$

5. (a) 500 volts . . . Use the formula $E = IR$, where E is in volts, I is in amperes, and R is in ohms. I is given in milliamperes and must therefore be converted to amperes for use in the formula:

   $I = 10$ ma = 10 × 0.001 = 0.01 amp

   Then

   $E = IR = 0.01 \times 50{,}000 = 500$ volts

   (b) 250 volts . . . Converting 5 ma to amperes, 5 × 0.001 = 0.005 amp. Then $E = IR = 0.005 \times 50{,}000 = 250$ volts
   (c) 4.1 kv . . . $I = 50$ ma = 50 × 0.001 = 0.05 amp; $R = 82$ kilohms = 82 × 1000 = 82,000 ohms. Then $E = IR = 0.05 \times 82{,}000 = 4{,}100$ volts. Since there are 1000 volts in 1 kv, $E = \frac{4100}{1000} = 4.1$ kv.

11 HOW ACCURATE SHOULD YOUR ANSWERS BE? . . . In the next topic you will study the division of decimals. The question that arises is to how many places the division should be carried. If you divide 4 by 3, is it adequate to write the answer to only two places as 1.3? Or should you carry it further to 1.33, or still further to 1.333, or even to 1.333333?

Experience shows that answers to three *significant figures* are sufficiently accurate for most practical electronics problems, and is therefore the accuracy your instructor will expect from you. The significant figures in a number are the digits of the number, excluding any zeros at the beginning or end put there for the purpose of placing the decimal point. Each of the numbers 1.33, 468, and 52.3 has three significant figures, since each has three digits. Each of the numbers 1.333, 1333, 460.6, and 46.06 has four significant figures. Each of the numbers 1.3 and 13 has two significant figures.

Suppose you read the current in a circuit on your meter as 1.62 ma. You would say that you have read the meter to an accuracy of three significant figures. If you convert your reading to amperes by multiplying by 0.001, the result, 0.00162 amp., is still accurate to three significant figures. The reason is that the accuracy was determined by how carefully you read the meter, and it would not be affected by converting from one unit to another. The zeros in front of the digits 162 are not part of your meter reading, but were added after the reading was made in order to spot the decimal point. They have nothing to do with the accuracy of your reading and are therefore not significant figures. The three significant figures in 0.00162 are the 1, the 6, and the 2.

Similarly, the reading of 1.62 ma can be changed to microamperes by multiplying by 1000, giving 1620 μa, which is still accurate to three significant figures. The zero was added to properly locate the decimal point, and it is not a significant figure.

In summary, the number of significant figures in a value is the number of digits, not counting zeros at the beginning or end of the number.

EXAMPLES . . . State the number of significant figures in each of the values listed.

387.56	Five significant figures
0.00027	Two significant figures . . . Don't count zeros at the beginning of a number.

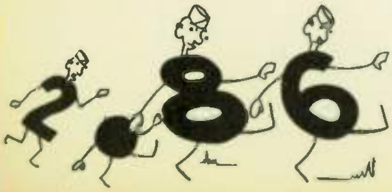

48,000,000	Two significant figures . . . Don't count zeros at the end of a number.
40085	Five significant figures
0.040085	Five significant figures . . . Don't count zeros at the beginning of a number.
4008500	Five significant figures . . . Don't count zeros at the end of a number.
60,009	Five significant figures

EXAMPLES . . . Round the following numbers off to three significant figures:

4.68335	4.68, *ans.*
28.768	28.8, *ans.* . . . An answer of 28.7 is also acceptable. Strictly speaking, it is better to increase the last retained digit by 1 when the following digit is 5 or greater. We will *not* insist that you do so, however.
0.0004482	0.000448, *ans.*
836,487	836,000, *ans.*
3.002	3.00, *ans.* . . . When rounding a number off to three figures, retain zeros needed at the end to make three figures.
50.07	50.1, *ans.* . . . 50.0 is also acceptable

WHAT HAVE YOU LEARNED?

1. To how many significant figures should your answer to problems in this course be carried? ____________

2. How many significant figures are there in each of the following numbers?

(a) 7
(b) 0.393
(c) 424.1
(d) 324.921
(e) 400,082
(f) 404
(g) 0.00003
(h) 0.0000007945
(i) 23,000,000
(j) 23.0025

3. Round off the following numbers to three significant figures.

(a) 46.3528
(b) 0.22242
(c) 0.000573194
(d) 234,876
(e) 0.030417
(f) 5.502
(g) 82.06
(h) 32.999

4. Solve to three significant figures:
   (a) If $I = 10.10$ amp. and $R = 2.02$ ohms, $E =$ __________.
   (b) If $E = 100.7465$ volts and $I = 0.6295$ amp., P in watts = __________. (HINT: Use $P = EI$.)

ANSWERS

1. Three . . . Of course, your answer will not be wrong if you carry to more than three, although extra and needless work is involved. You will not get full credit if you use less than three significant figures.
2. (a) One
   (b) Three
   (c) Four
   (d) Six
   (e) Six
   (f) Three
   (g) One
   (h) Four
   (i) Two
   (j) Six
3. (a) 46.4 (or 46.3)
   (b) 0.222
   (c) 0.000573
   (d) 235,000 (or 234,000)
   (e) 0.0304
   (f) 5.50
   (g) 82.1 (or 82.0)
   (h) 33.0 (or 32.9)
4. (a) 20.4 . . . $E = IR = 10.10 \times 2.02 = 20.4020 = 20.4$ volts. E, as computed, is shown with five significant figures. Because only three significant figures are required, we may strike the unneeded digits at the end.
   (b) 63.6 watts . . . $P = EI = 100.7465 \times 0.6295$. To save work, we can reduce each of the terms to three significant figures at the start. Because the fourth digit in 100.7465 is 5 or greater, we add 1 to the third digit, giving us 101. Similarly, the fourth digit in 0.6295 is 5; therefore, we add 1 to the preceding digit, 9, giving us 0.630. Then, $P = EI = 101 \times 0.630 = 63.63$ watts. The last digit is dropped to round the number off to three significant figures.
   We could also round off these numbers to 100 and 0.629, which would give us $100 \times 0.629 = 62.9$ watts. Strictly speaking, 63.6 watts is a better answer, but we would accept either one.

12

DIVISION OF DECIMALS . . . Decimals in division, just as in multiplication, are treated like whole numbers, but special attention must be given to placing the decimal point in the answer.

An illustration of a division problem is shown below. The divisor, dividend, and quotient (answer) are identified.

20 quotient
divisor 24 $\overline{)480}$ dividend

One important rule for dividing decimals is this: *first eliminate the decimal point from the divisor.* To do so, move the decimal point to the right end of the divisor. Note the number of places you have moved the decimal point, and then move the decimal point in the

dividend an equal number of places to the right. Place the decimal point in the quotient directly above the decimal point in the dividend.

EXAMPLE ... In the following division problem, eliminate the decimal point from the divisor and place the decimal point in the quotient. $0.0211 \; \overline{)\,0.004362}$

SOLUTION ... $\underset{\curvearrowright}{0.0_1 2_2 1_3 1_4.} \; \overline{)\,\underset{\curvearrowright}{0.0_1 0_2 4_3 3_4.}62} = 211 \; \overline{)\,43\overset{\cdot}{.}62}$

EXPLANATION ... The decimal point in the divisor was moved four places to the right. Therefore, the decimal point in the dividend was also moved four places to the right. The decimal point in the quotient is placed directly above the decimal point in the dividend.

Next divide the divisor into the dividend. Place the first digit of the quotient directly over the last digit used in the dividend for finding the first digit of the quotient.

EXAMPLE ... In the following problem, locate the first digit of the quotient: $211 \; \overline{)\,43\overset{\cdot}{.}62}$

SOLUTION ... $\begin{array}{r} .2 \\ 211 \; \overline{)\,43.62} \end{array}$

EXPLANATION ... 211 cannot be divided into 4 or into 43. But it can be divided into 436 about 2 times. Therefore, place a 2 in the quotient directly over the 6 in the dividend.

Complete the division.

EXAMPLE ... Complete the solution of the following problem to four significant figures and round off to three significant figures.

$$\begin{array}{r} .2 \\ 211 \; \overline{)\,43.62} \end{array}$$

SOLUTION ...
$$\begin{array}{rl} & .2067 = 0.207 \\ 211 & \overline{)\,43.6200} \\ & \underline{42\,2} \\ & 1\,420 \\ & \underline{1\,266} \\ & 1\,540 \\ & \underline{1\,477} \end{array}$$

EXPLANATION ... Notice that two zeros have been added to the end of the dividend. They permit carrying out the quotient to the required number of significant figures.

Be very careful to keep each digit in the quotient directly above the last digit in the dividend used in getting that digit in the quotient. Notice that the 6 in the quotient in the above example goes above the first zero of the dividend, since this zero was the last digit brought down to form 1420, into which 211 is divided to get the 6. Before the zero was brought down to form 1420, the 2 of the dividend was brought down to form 142. Since the divisor, 211, would not divide into 142, a zero was placed in the quotient above the 2 in the dividend.

Place a zero in the quotient after the decimal point each time the divisor is tried but will not go into the available part of the dividend. Such zeros locate the decimal point and are as essential as any other digits in the answer.

EXAMPLE . . . $324 \overline{\smash{)}0.7642} =$ ________

SOLUTION . . .

$$\begin{array}{r@{\,}l}
 & .002358 \\
324 & \overline{\smash{)}0.764200} \\
 & \underline{648} \\
 & 1162 \\
 & \underline{972} \\
 & 1900 \\
 & \underline{1620} \\
 & 2800 \\
 & \underline{2592} \\
 & 208
\end{array}$$

EXPLANATION . . . To locate the first digit of the quotient, note that 324 cannot be divided into 7. Therefore, *place a zero* in the quotient after the decimal point and directly above the 7. Likewise, 324 cannot be divided into 76. Therefore, *place a zero* in the quotient above the 6. But 324 can be divided into 764 two times; therefore, place a 2 in the quotient above the 4, etc.

WHAT HAVE YOU LEARNED?

1. Solve the following problems. Carry the quotients to three significant figures.

(a) $\dfrac{31.7}{2.68} =$ ________

(b) $\dfrac{0.0049}{231.1} =$ ________

(c) $\dfrac{400.5}{681} =$ ________

(d) $\dfrac{0.000497}{0.01011} =$ ________

(e) $\dfrac{14}{236} =$ ________

(f) $\dfrac{271}{11.48} =$ ________

(g) $\frac{3}{487} =$ ______________

(h) $\frac{1}{425} =$ ______________

(i) $\frac{1}{500} =$ ______________

(j) $\frac{1}{67{,}000} =$ ______________

(k) $\frac{0.14}{23} =$ ______________

(l) $\frac{760{,}000}{0.04} =$ ______________

(m) $\frac{0.01}{0.01} =$ ______________

(n) $\frac{0.01}{0.003} =$ ______________

(o) $\frac{3.04}{200} =$ ______________

(p) $\frac{0.00012}{0.006} =$ ______________

(q) $\frac{0.0008}{4000} =$ ______________

(r) $\frac{2}{0.2} =$ ______________

(s) $\frac{4250}{1} =$ ______________

2. (a) In a d-c circuit, $E = 9.3$ volts, $I = 3.1$ amp, $R =$ ______________.
   (b) If $E = 97.7$ volts, $I = 3.16$ amp, $R =$ ______________.
   (c) If $E = 141$ volts, $I = 0.707$ amp, $R =$ ______________.

3. In the formula $C = \frac{t}{R}$, where C is capacitance, in farads; t is time, in seconds; and R is resistance, in ohms:
   (a) If $t = 2$ sec and $R = 1000$ ohms, $C =$ ______________ farad.
   (b) If $t = 0.001$ sec and $R = 20$ ohms, $C =$ ______________ farad.
   (c) If $t = 1.8$ sec and $R = 2200$ ohms, $C =$ ______________ farad.

ANSWERS

1. (a) 11.8 . . .

$$
\begin{array}{r}
11.8 \\
2.\underset{\curvearrowright}{68}\ \overline{)\,31.\underset{\curvearrowright}{70}0} \\
\underline{268} \\
490 \\
\underline{268} \\
2220 \\
\underline{2144} \\
76
\end{array}
$$

(b) 0.0000212
(c) 0.588
(d) 0.0492
(e) 0.0593
(f) 23.6
(g) 0.00616
(h) 0.00235
(i) 0.00200
(j) 0.0000149
(k) 0.00609
(l) 19,000,000
(m) 1.00
(n) 3.33
(o) 0.0152
(p) 0.0200
(q) 0.000 000 200
(r) 10.0
(s) 4250

2. (a) 3 ohms . . . $R = \frac{E}{I} = \frac{9.3}{3.1} = 3$
   (b) 30.9 ohms; (c) 199 ohms

3. (a) 0.002 . . . $C = \frac{t}{R} = \frac{2}{1000} = 0.002$ farad . . . or, 0.00200 farad. However, zeros at the end of a decimal value have no meaning and can be dropped.
(b) 0.00005 farad
(c) 0.000818 . . . $C = \frac{t}{R} = \frac{1.8}{2200} = 0.000818$ farad

13 CHANGING FRACTIONS TO DECIMALS

. . . Earlier we said that a fraction is a form for division. That is, in a fraction such as $\frac{6}{7}$ the numerator is to be divided by the denominator.

A fraction can be converted to a decimal merely by carrying out the indicated division in the manner of topic 12.

WHAT HAVE YOU LEARNED?

1. Convert the following fractions to decimals by dividing in the manner of topic 12.

(a) $\frac{1}{10} =$ __________
(b) $\frac{3}{7} =$ __________
(c) $\frac{39}{21} =$ __________
(d) $1\frac{41}{100} =$ __________
(e) $11\frac{5}{7} =$ __________

ANSWERS

1. (a) 0.1; (b) 0.428 (or 0.429); (c) 1.86
(d) 1.41 . . . To solve for the mixed number, simply convert the fraction to a decimal and add the whole number. (e) 11.7

14 RECIPROCALS

. . . The reciprocal of a number is 1 divided by that number. Thus, the reciprocal of 2 is $\frac{1}{2}$; that of 34 is $\frac{1}{34}$; that of 92,300 is $\frac{1}{92{,}300}$; and that of 0.000592 is $\frac{1}{0.000592}$.

The reciprocal is converted to decimal form simply by carrying out the indicated division. Although a reciprocal is just a division problem which has a numerator of 1, it finds a great many applications in electronics.

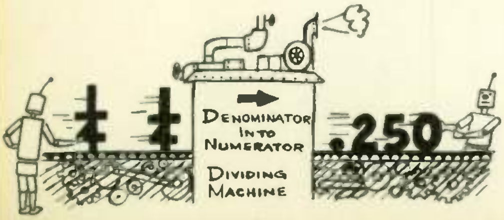

1. Find the reciprocals of the following numbers:

(a) 4
(b) 8
(c) 64
(d) 1000
(e) 0.002
(f) 6370
(g) 0.521
(h) 0.000732

2. The conductance, in mhos, of a circuit is equal to the reciprocal of the circuit resistance in ohms.

(a) A 150-ohm resistor has a conductance of ______ mhos.
(b) A 0.025-ohm resistor has a conductance of ______ mhos.
(c) A 5000-ohm resistor has a conductance of ______ mhos.
(d) Conductance is the reciprocal of ______.

3. In a certain circuit, $B = \frac{1}{X_1} + \frac{1}{X_2} + \frac{1}{X_3}$. If $X_1 = 0.25$, $X_2 = 3.33$, and $X_3 = 14.3$, $B =$ ______.

4. $t = \frac{1}{f}$, where f is the frequency of an alternating current, in cycles per second, and t is the period, or time for each cycle, in seconds. If $f = 60$ cps, the time required for each cycle is ______ second.

5. $Xc = \frac{1}{2\pi fC}$, where Xc is capacitive reactance, in ohms; $\pi = 3.14$; $f =$ frequency, in cycles per second; and $C =$ capacitance, in farads. If $f = 60$ cps and $C = 0.00005$ farad, $Xc =$ ______ ohms. (HINT: Perform the multiplication in the denominator and then solve the reciprocal.)

6. When three resistances R_1, R_2, and R_3 are in parallel, the combined resistance is found by the formula

$$R = \frac{1}{\frac{1}{R_1} + \frac{1}{R_2} + \frac{1}{R_3}}$$

If R_1, R_2, and R_3 are 18.3 ohms, 4.67 ohms, and 5.5 ohms, respectively, the combined resistance is ______ ohms. (HINT: First convert each reciprocal to its decimal value.)

ANSWERS

1. (a) 0.250; (b) 0.125; (c) 0.0156; (d) 0.001; (e) 500;

(f) 0.000157; (g) 1.92; (h) 1366 (or 1370 if rounded off)

2. (a) 0.00667; (b) 40; (c) 0.0002 (d) resistance.

3. 4.37 . . . $B = \frac{1}{X_1} + \frac{1}{X_2} + \frac{1}{X_3}$

$$= \frac{1}{0.25} + \frac{1}{3.33} + \frac{1}{14.3}$$

$$= 4 + 0.300 + 0.0699$$

$$B = 4.37$$

4. 0.0167 . . . $t = \frac{1}{f} = \frac{1}{60} = 0.0167$ sec

5. 52.9 ohms . . . $Xc = \frac{1}{2\pi fc} = \frac{1}{2 \times 3.14 \times 60 \times 0.00005}$

$2 \times 3.14 = 6.28$ $\quad 6.28 \times 60 = 376.8 = 377$ (3 significant figures)

$377 \times 0.00005 = 0.01885 = 0.0189 \quad \frac{1}{0.0189} = 52.9$ ohms

6. 2.22 . . . $R = \dfrac{1}{\frac{1}{R_1} + \frac{1}{R_2} + \frac{1}{R_3}} = \dfrac{1}{\frac{1}{18.3} + \frac{1}{4.67} + \frac{1}{5.5}}$

$$\frac{1}{18.3} = 0.0546 \qquad \frac{1}{4.67} = 0.214 \qquad \frac{1}{5.5} = 0.182$$

R then $= \dfrac{1}{0.0546 + 0.214 + 0.182} = \dfrac{1}{0.451} = 2.22$ ohms

15

PERCENTAGE . . . Electronic quantities are frequently expressed in terms of per cent. For example, the efficiency of the final stage of a transmitter or the effectiveness of a filter in a power supply is often expressed in terms of per cent.

One per cent of a number is one one-hundredth of it. Thus, 12 per cent of a number is $\frac{12}{100}$, or 0.12 of it.

To express a decimal in per cent form, move the decimal point two places to the right and add either the per cent sign, %, or the words "per cent." Thus, 0.0147 is equal to 1.47%. Conversely, when a value is given in per cent form, it can be changed to a simple decimal by moving the decimal point two places to the left and discarding the % sign or the words "per cent." Thus, 37% is equal to 0.37.

Values which are expressed in terms of per cent should be changed to decimals before being used in computations.

Example . . . 25% of 32 = ________.

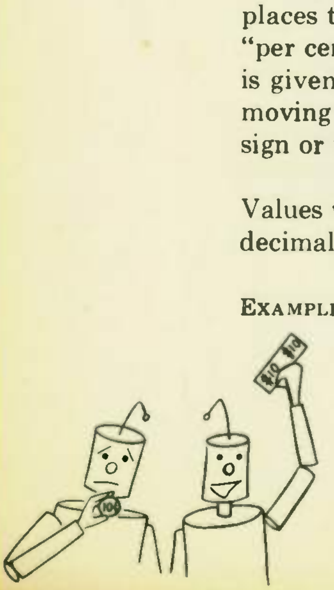

Solution . . . $0.25 \times 32 = 8$

Explanation . . . Change 25% to a decimal by moving the decimal point two places to the left. (Although the decimal point is not shown in the term 25%, it is understood to be at the end of the number.) Then multiply in the usual manner.

Example . . . 3.5 is ________ per cent of 56.

Solution . . . $\frac{3.5}{56} = 0.0625 = 06.25\% = 6.25\%$

Explanation . . . Divide 3.5 by 56 and then change to the per cent form by moving the decimal point two places to the right and adding the per cent sign.

WHAT HAVE YOU LEARNED?

1. Express the following percentages in decimal form:
   (a) 2% (b) 17% (c) 150%

2. Express the following decimals in percentage form:
   (a) 0.09 (b) 2.75 (c) 0.875

3. 7.1% of 148 = ________

4. 241% of 100 = ________

5. 41 is ________ per cent of 612.

6. 1 is ________ per cent of 1000.

7. The efficiency of any device is equal to its power output divided by its power input. This can be stated as

$$\eta = \frac{P_o}{P_i} \times 100\%$$

where η is the efficiency, in per cent; P_o is the output power, in watts; and P_i is the input power, in watts.

If the input power to the final stage of a citizens band transmitter is 5 watts and the output power is 3 watts, the efficiency of the final stage is ________ per cent.

8. Two resistors are rated at 2200 ohms. Resistor *A* has a tolerance

of 10% and B a tolerance of 2%. This means that the actual resistance of A will be within 10% of its rated value, and that of B within 2%.

(a) The actual resistance of the ± 10% resistor will lie between ________ ohms and ________ ohms.

(b) The actual resistance of the 2% resistor will lie between ________ ohms and ________ ohms.

9. The voltage regulation of a power supply is given by the formula

$$\text{regulation (reg)} = \frac{E_n - E_f}{E_f}$$

where E_n is the no-load voltage and E_f is the full-load voltage. When the no-load voltage is 150 volts and the full-load voltage is 130 volts, the regulation is ________ per cent.

ANSWERS

1. (a) 0.02; (b) 0.17; (c) 1.50
2. (a) 9%; (b) 275%; (c) 87.5%
3. 10.5 . . . 7.1% = 0.071; 0.071 × 148 = 10.5
4. 241
5. 6.70% . . . $\frac{41}{612} = 0.06699 = 6.70\%$
6. 0.1 . . . $\frac{1}{1000} = 0.001 = 0.1\%$
7. 60 . . . $\eta = \frac{P_o \times 100}{P_i} = \frac{3 \times 100}{5} = 60\%$
8. (a) 1980 (and) 2420 . . . 10% of 2200 = 220 ohms
   maximum value = 2200 + 220 = 2420 ohms
   minimum value = 2200 − 220 = 1980 ohms
   (b) 2156 and 2244
9. 15.4 . . . $\text{reg} = \frac{E_n - E_f}{E_f} = \frac{150 - 130}{130} = \frac{20}{130} = 0.1538 = 15.4\%$

POWERS OF A NUMBER

16 **THE MEANING AND USE OF POWERS OF A NUMBER . . .** When a number is multiplied by itself one or more times, we call this raising the number to a certain power. For example, 4 × 4 indicates that 4 is being raised to its second power. Similarly, 2 × 2 × 2 indicates that 2 is being raised to its third power, since three 2's are being multiplied.

To indicate that a number is being raised to a certain power, a superscript is used. Thus, 4^2 means 4 is being raised to its second power,

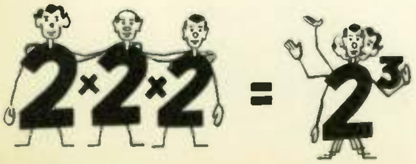

which is equal to $4 \times 4 = 16$. Similarly, 2^3 means 2 is being raised to its third power, which is another way of saying $2 \times 2 \times 2 = 8$.

When a number is raised to its second power, it is usually referred to as being "squared." Thus, 37^2 is 37 squared, which is $37 \times 37 = 1369$. When a number is raised to its third power, it is said to be "cubed." Thus, 7^3 may be called 7 cubed, and it equals $7 \times 7 \times 7$, which is 343.

Sometimes letter symbols are raised to certain powers. Thus,

$$E^4 = E \times E \times E \times E, \qquad R^2 = R \times R$$

EXAMPLE . . . $3^4 =$ ________

SOLUTION . . . $3^4 = 3 \times 3 \times 3 \times 3 = 81$, *ans.*

EXPLANATION . . . The superscript tells you that the 3 should appear 4 times in the expression for multiplication.

EXAMPLE . . . Given the formula $P = EI$, express P in terms of I and R only. (HINT: $E = IR$)

SOLUTION . . . $P = EI = (IR)I = I \times I \times R = I^2R$, *ans.*

EXPLANATION . . . $P = EI$. Substituting IR for E, we get $P = (IR) \times I$, etc. To state the formula $P = I^2R$ in words, we say that power P equals current I squared, or I^2, times the resistance R.

EXAMPLE . . . Given the formula $P = I^2R$, find P when I is 3 and R is 4.

SOLUTION . . . $P = I^2R = 3^2 \times 4 = 3 \times 3 \times 4 = 36$, *ans.*

WHAT HAVE YOU LEARNED?

1. In the problem $12 \times 12 \times 12$, the number 12 is being raised to its third ________.

2. Solve the following:
   (a) $211^2 =$ ________
   (b) $6^3 =$ ________
   (c) $100^4 =$ ________
   (d) When $E = 7$, $E^2 =$ ________
   (e) When $I = 0.524$, $I^2 =$ ________

3. (a) $P = I^2R$. If $I = 2.63$ and $R = 12$, $P =$ ________.
   (b) $P = \dfrac{E^2}{R}$. If $E = 31.5$ and $R = 12$, $P =$ ________.

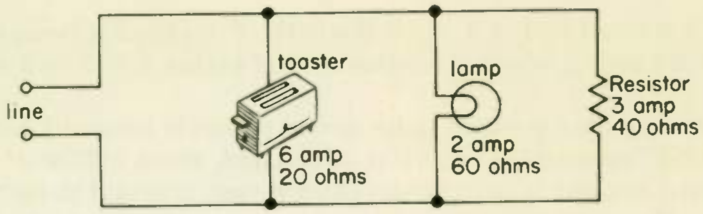

Fig. 5

4. In the circuit given in Fig. 5 a toaster, a lamp, and a resistor are connected across a voltage source. The resistance of each unit and the current drawn by each unit are marked. Using the formula $P = I^2R$, where I is in amperes and R is in ohms, find the power used by each of the three devices.

(a) Power P_1 used by the resistor = __________ watts.
(b) Power P_2 used by the lamp = __________ watts.
(c) Power P_3 used by the toaster = __________ watts.
(d) Total power P used by all three elements = __________ watts.
(HINT: $P = P_1 + P_2 + P_3$)

ANSWERS

1. Power
2. (a) 44,521 . . . $211^2 = 211 \times 211 = 44{,}521$
   (b) 216 . . . $6 \times 6 \times 6 = 216$
   (c) 100,000,000 . . . $100^4 = 100 \times 100 \times 100 \times 100 = 100{,}000{,}000$
   (d) 49 . . . $E^2 = 7 \times 7 = 49$ (e) 0.275
3. (a) 83.0 . . . $P = I^2R = I \times I \times R = 2.63 \times 2.63 \times 12 = 83.0$
   (b) 82.7 . . . $P = \frac{E^2}{R} = \frac{31.5 \times 31.5}{12} = 82.7$
4. (a) 360 . . . $P_1 = I_1^2R_1 = 3 \times 3 \times 40 = 360$ watts
   (b) 240; (c) 720
   (d) 1320 . . . $P = P_1 + P_2 + P_3 = 360 + 240 + 720 = 1320$ watts

17 WORKING PROBLEMS IN RIGHT ORDER . . . When a number of different steps are involved in working a problem, you must pay particular attention that you do the steps in the correct order. The thing to remember is that *multiplications must be done first,* before any adding or subtracting is done.

EXAMPLE . . . $2 + 3 \times 4 + 5 =$ ______.

SOLUTION . . . $2 + 3 \times 4 + 5 =$
$2 + 12 + 5 = 19$, *ans.*

EXPLANATION . . . First multiply the 3 by the 4, and then add. Notice that you would obtain a wrong answer if one or both of the additions were done first.

Example . . . Find K in the formula below if $R_1 = 0.2$ and $R_2 = 20$.

$$K = \frac{2 + R_1R_2}{R_2 - 12}$$

Solution . . . $K = \dfrac{2 + 0.2 \times 20}{20 - 12}$ (1)

$$K = \frac{2 + 4}{20 - 12} \qquad (2)$$

$$= \frac{\overset{3}{\cancel{6}}}{\underset{4}{\cancel{8}}} = \frac{3}{4}\text{, } ans. \qquad (3)$$

Explanation . . . After the given values are substituted in the formula, the multiplication is done as shown in step 2. No cancellation can be done until both the numerator and denominator are free of plus and minus signs—something you never want to forget. Therefore after step 2 is completed, the values in the numerator are added, and in the denominator subtracted, as indicated. Since the resulting value, 8 is free of plus and minus signs, cancellation can now be done.

Now let's look at the problem 20 − 6 + 4. Since there are no multiplication signs, you can work the problem in any order you want to—but keep on your toes. Notice that the minus sign is in front of the 6, and there is a plus sign in front of the 4. This means that the 6, and *only* the 6, is to be subtracted. Don't make the mistake of subtracting 6 + 4 from the 20, which would give a wrong answer of 10. Since 20 − 6 is 14 and 14 + 4 is 18, the correct answer is 18. Another way is to add the 20 and the 4, to give 24, and then subtract the 6 to give 18.

If a problem has parentheses, the rule to remember is that the part of the problem within the parentheses should be worked first. After this is done, follow the working order explained above. For example, to find the value of 20 − (6 + 4), first add the 6 and 4 in parentheses. Then the problem becomes 20 − 10, which equals 10, the answer.

Example . . . Find K in the formula below if $R_1 = 3$ and $R_2 = 5$

$$K = 2 + R_1R_2 + (2 + R_1)R_2$$

Solution . . . $K = 2 + 3 \times 5 + (2 + 3)5$
Working first the part in parentheses, $K = 2 + 3 \times 5 + 5 \times 5$
Doing the multiplications next, $K = 2 + 15 + 25 = 42$, *ans.*

18 SUMMARY PROBLEMS TO INCREASE YOUR SKILL . . . The basic principles involved in working with formulas have been covered. The problems which follow give you additional practice on the principles most often missed by students.

WHAT HAVE YOU LEARNED?

1. Fill in the blanks:
   (a) There are 1000 milliamperes in one ampere. Therefore to convert amperes to milliamperes, you would multiply by ________, and to convert milliamperes to amperes, you would multiply by ________.
   As an example, 50 amperes is equal to ________ ma, and 50 ma is equal to ________ amperes.
   (b) There are 1000 millivolts in one volt. Therefore, 400 millivolts is equal to ________ volts, and 1.6 volts is equal to ________ mv.
   (c) There are 1000 ohms in one kilohm. Therefore, 0.28 ohms is equal to ________ kilohms, and 0.28 kilohms is equal to ________ ohms.

2. In the formula $t = \frac{L}{R}$, where t is the time in seconds, L is the inductance in henries, and R is the resistance in ohms, what is the value of t in minutes, if L is 320 millihenries (there are 1000 millihenries in a henry), and R is 0.004 kilohms?

3. A parallel circuit has two branches. 16.4 amperes flows in one branch and 85 milliamperes in the other. What is the exact total current? (It would be the sum of the two branch currents.)

4. Given the formula $Q = \frac{G}{3 + hR}$, find the value of Q if h is equal to $\frac{1}{5}$, R is equal to 20, and G is equal to 60.

5. What is the area in square inches of a square that is 0.3 ft on each side? There are 144 square inches in a square foot.

6. One formula for circuit power is $P = \frac{E^2}{R}$, where P is the power in watts, E is the voltage in volts, and R is the resistance in ohms. If the voltage is 6 volts and the resistance 3 kilohms, what is the power in milliwatts?

ANSWERS

1. (a) 1000; 0.001; 50,000; 0.05 . . . Compare with Problems 2 and 3 on page 22.
   (b) 0.4 volts; 1600 mv
   (c) 0.00028 kilohms; 280 ohms

2. 0.00133 minutes . . . You must always remember in using formulas to change the given units to units required by the formula. 320 millihenries = 0.32 henries, and 0.004 kilohms equal 4 ohms. Hence, $t = \frac{L}{R} = \frac{0.32}{4} = 0.08$ seconds. Notice that the information with the formula says that t will be in seconds. Since the question asks for the answer in minutes, $\frac{0.08}{60} = 0.00133$, the time in minutes.
3. 16.485 amperes . . . Notice that one value is given in amperes and the other in milliamperes. You can add to values only if they are in the same units. 85 ma = 0.085 amperes. 16.4 + 0.085 = 16.485 amperes, the answer.
4. 8.57 . . . $Q = \frac{G}{3 + hR} = \frac{60}{3 + \frac{1}{5} \times 20}$

   $$= \frac{60}{3 + 4} = \frac{60}{7} = 8.57$$

   You must remember: (1) you cannot cancel as long as there is a + sign in either the numerator or the denominator—(See Topic 4)—hence, you can't cancel the 3 into the 60 and (2) when you have both + and × signs in the denominator (or the numerator), you must multiply before you add (See Topic 17).
5. 12.96 sq in . . . $0.3^2 = 0.3 \times 0.3 = 0.09$ sq ft. Changing to square inches, $0.09 \times 144 = 12.96$ sq in.
6. 12 milliwatts . . . First of all you must change kilohms to ohms, since the formula says that R must be in ohms. 3 kilohms = 3000 ohms.

   $$P = \frac{E^2}{R} = \frac{6^2}{3000} = \frac{36}{3000} = 0.012 \text{ watts}$$

   Now 0.012 watts must be changed to milliwatts. 0.012 watts = 12 milliwatts.

LESSON 2101-2

PUTTING FORMULAS TO WORK

EXAMINATION

The purpose of this exam is to give you additional training in mathematics used in electronics, and so both you and your instructor can make sure that you understand the principles taught in the lesson. Since finding out your mistakes and the reasons you made them will help you in following lessons, it is important that you mail this examination *as soon as it is completed.* Then start on the next lesson, without waiting for the return of this examination.

Circle the number of the correct answer for each question that follows. When you are finished, transfer the answers to the answer sheet by putting X's in the proper squares. When the graded answer sheet is returned to you, correct in this book any questions you may have missed. By doing so, you will have a record of the correct answers to all questions for review purposes.

1. Which one of the following statements is correct?
   [✓ (1)] All the statements below.
   (2) You should study the lesson topic by topic, skipping nothing, and work every practice problem before doing the examination.
   (3) There are two aspects to working a problem. The first is knowing how, and the second is using adequate care and sufficient checking to get the right answer. Both are important.
   (4) A wrong answer due to a misplaced decimal point is worse from a practical point of view than no answer at all.
   (5) Experts in math always recheck their work.
   (6) You will complete your training program quicker (and with better grades) if you don't hurry through this lesson and the other early lessons—in particular, never skip any *What Have You Learned?* questions.

2. How accurate should your answers be to most practical problems in electronics, and to problems in your course?
   (1) To at least one decimal place, and better to two.
   [illegible] To three decimal places.
   (3) To two significant figures.
   [✓ (4)] To three significant figures.

3. In which selection below is the value given *not* rounded off to three significant figures?
   (1) 6.2830 becomes 6.28 when rounded off to three significant figures.
   (2) 40.3388 becomes 40.3.
   [✓ (3)] 0.000406329 becomes 0.0004063.
   (4) 21,448 becomes 21,400.

4. Before substituting values in a formula in electronics you must first make *certain*
   (1) that all values substituted are rounded off to three significant figures.
   [✓ (2)] that the values being substituted are in the same units as called for by the formula.
   (3) that the decimal point is moved one digit to the right for all values to go in the denominator.
   (4) that the formula does not require the use of a slide rule.

5. The formula for finding the current of a circuit is $I = \frac{E}{R}$, where I is the current in amperes, E is the voltage in volts, and R is the

resistance in ohms. Suppose the circuit voltage is 3.5 kilovolts. One kilovolt is equal to 1000 volts. The value to substitute for E in the formula is
(1) 0.0035
(2) 3.5
(3) 350
[✓ (4) 3500]
(5) 35,000

6. The formula for finding the voltage in a certain circuit is $E = \frac{W}{It}$, where E is the voltage in volts, W is the work done in joules, I is the current in amperes, and t is the time in seconds. Suppose we want to find the voltage when the work done is 240 joules, the current is 20 milliamperes, and the time is 5 minutes. The very first thing you must do is
(1) change milliamperes to amperes and kilovolts to volts.
(2) change joules to watts and milliamperes to amperes.
(3) change kilovolts to volts and minutes to seconds.
[✓ (4) change milliamperes to amperes and minutes to seconds.]

7. What is the voltage for the problem in Question 6 above?
(1) 0.04 volts
(2) 2.4 volts
(3) 2.5 volts
(4) 25 volts
[✓ (5) 40 volts]
(6) 400 volts
(7) 2400 volts
(8) None of the above

8. How much is the square of 0.4?
(1) 0.0016
(2) 0.016
[✓ (3) 0.16]
(4) 1.6
(5) 16

9. How much is the square of 0.04?
(1) 0.000016
(2) 0.00016
[✓ (3) 0.0016]
(4) 0.016
(5) 0.16

10. How much is 2 × 0.2?
(1) 0.004
(2) 0.04
[✓ (3) 0.4]
(4) 4

11. How much is the square of 0.2?
(1) 0.004
[✓ (2) 0.04]
(3) 0.4
(4) 4

12. The power used in a circuit can be found by the formula $P = I^2R$, where P is the power in watts, I is the current in amperes, and R

is the resistance in ohms. If the current is 50 milliamperes, and the resistance is 8 ohms, find the power.

(1) 0.2 watt
(2) 2 watts
(3) 3.2 watts
(4) 20 watts
(5) 320 watts
(6) 20,000 watts
[✓ (7) None of the above]

13. The cut off point of a tube is equal to the plate voltage divided by the amplification factor. If we let E_c stand for cut off point, E_p for plate voltage, and μ for amplification factor, which of the following would correctly express this statement in formula form?

(1) $E_c = E_p \times \mu$
(2) $E_c = \frac{\mu}{E_p}$
(3) $\mu = E_p \times E_c$
(4) $E_p = \frac{\mu}{E_c}$
[✓ (5) $E_c = \frac{E_p}{\mu}$]
(6) $\mu = \frac{E_c}{E_p}$

14. To find the total current in a parallel circuit, you add the currents in the branches. If there are four branches with currents of 32 amperes, 3.52 amperes, 46 milliamperes, and 5 milliamperes, what is the exact total current?

[✓ (1) 35.571 amperes]
(2) 36.48 amperes
(3) 36.957 amperes
(4) 39.17 amperes
(5) 44.12 amperes
(6) 86.52 amperes
(7) None of the above

15. A parallel circuit has two branches. The current in one branch is 0.0643 amperes and the total current is 6 amperes. What is the exact current in the other branch? Remember that the total current is the sum of the currents in the two branches.

(1) 5.0357 amp
(2) 5.0457 amp
(3) 5.357 amp
[✓ (4) 5.9357 amp]
(5) 6.0643 amp
(6) 6.643 amp
(7) None of the above

16. Multiply 604.058 by 7.0809. The exact answer is

(1) 47.17088922
(2) 427.72742922
(3) 471.7088922
[✓ (4) 4277.2742922]
(5) 4717.088922
(6) 42,772.742922
(7) None of the above

17. As a check to make sure you have your decimal point in Problem 16 in the right place, make a rough calculation as follows: Note

that 604.058 is roughly 600 and that 7.0809 is roughly 7. Therefore the correct answer should be on the order of

(1) 42
(2) 420
[✓ (3)] 4200
(4) 42,000

18. What is the value of 0.00208 × 34.2, rounded off to three significant figures?

(1) 0.000711
(2) 0.00711
[✓ (3)] 0.0711
(4) 0.711
(5) 7.11
(6) 71.1

19. A 540,000-ohm resistor has a tolerance of 4 percent. What is the minimum (least) value of resistance that this resistor could have, assuming it is within its tolerance?

(1) 21,600 ohms
[✓ (2)] 518,400 ohms
(3) 537,840 ohms
(4) 561,600 ohms
(5) None of the above

20. If you divide 2 by 8 you get the decimal 0.25. Changed to percentage, the decimal 0.25 is equal to

(1) 0.0025 per cent.
(2) 0.025 per cent.
(3) 0.25 per cent.
(4) 2.5 per cent.
[✓ (5)] 25 per cent.

21. 23 is what per cent of 91?

(1) 0.253 per cent
(2) 2.53 per cent
(3) 3.96 per cent
[✓ (4)] 25.3 per cent
(5) 39.6 per cent
(6) 396 per cent

22. The conductance of a circuit in mhos is equal to the reciprocal of the circuit resistance in ohms. If a circuit has a resistance of 73 ohms, what is the circuit conductance?

(1) 0.00137 mho
[✓ (2)] 0.0137 mho
(3) 0.137 mho
(4) 0.73 mho
(5) 1.37 mhos
(6) 73 mhos

23. Find the value of $\frac{0.003}{0.00001}$.

(1) 0.00333
(2) 0.0333
(3) 3.33
(4) 30
(5) 100
[✓ (6)] 300
(7) 3000
(8) None of the above

24. What is the value of $40 - 8 + 2$?
(1) 30
[✓ (2) 34]
(3) Both 30 and 34 are correct answers, depending upon how the problem is worked.

25. Below are shown the work of Joe and Harry in finding the value of $\frac{18 + 36}{9 \times 12 \times 2}$

Joe's work: $\frac{\overset{2}{\cancel{18}} + \overset{3}{\cancel{36}}}{\cancel{9} \times \cancel{12} \times \cancel{2}} = 3$

Harry's work: $\frac{18 + 36}{9 \times 12 \times 2} = \frac{\overset{\overset{1}{\cancel{6}}}{\cancel{54}}}{\cancel{9} \times \underset{2}{\cancel{12}} \times 2} = \frac{1}{4}$

Which man has worked the problem correctly and why?
(1) Joe worked it correctly, because he first cancelled as much as he could.
(2) Joe worked the problem correctly because he wrote the answer as 3 rather than as $\frac{3}{1}$
[✓ (3) Harry worked the problem correctly because he removed the plus sign from the numerator before cancelling.]
(4) Both Joe and Harry worked the problem correctly, because there are two right answers.

26. Find the value of $\frac{6 \times 7 + 3}{6 \times 7 - 3}$
(1) -1
[✓ (3) 1.154]
(2) 1
(4) 2.5

27. The gain of a feedback amplifier is found by the formula $G = \frac{A}{1 + AB}$, where G = gain of the amplifier, A = gain without feedback and B = fraction of output which is fed back. If the gain without feedback is 72, and $B = \frac{1}{9}$, what is the gain of the amplifier?
(1) Not enough information is given to calculate the gain.
(2) 0.9
(4) 8.87
[✓ (3) 8]
(5) 9

28. The formula for finding the combined resistance of four resistors in parallel is

$$R = \frac{1}{\frac{1}{R_1} + \frac{1}{R_2} + \frac{1}{R_3} + \frac{1}{R_4}}$$

Find the combined resistance if $R_1 = 3$ ohms, $R_2 = 4$ ohms, $R_3 = 5$ ohms, and $R_4 = 6$ ohms.

(1) 0.95 ohm
[✓ (2)] 1.053 ohms
(3) 2.14 ohms
(4) 4.5 ohms
(5) 9.5 ohms

WARNING: This examination cannot be graded unless you write the full lesson number (2101-2) on your *Answer Sheet*. The -2 on the end of 2101-2 tells us which edition of the lesson you have, which we must know before we can grade your paper. So be sure not to leave off the -2.

How to Earn Tuition Credits, Cash Awards, and Technical Books

Your status as a CIE student qualifies you for an almost unlimited opportunity to earn these awards. Some students earn enough to pay their entire tuition or build a fine reference library . . . and there is almost no work involved!

That sounds too good to be true? Sure it does, but it can't be said any other way because those are the facts. Take a look at the simple procedure involved and see if you don't agree it is the easiest way to earn money that you know about.

1. Make up a list of friends or fellow workers that you think would benefit from a CIE Course.
2. Explain to them how CIE lessons are easy to understand; the small study units; the clear print; and the use of many illustrations. With new programmed methods of instruction, studying is made easy . . . it's actually fun! You can study anywhere . . . any time. There are no classes to attend . . . no other books or equipment to buy.
3. Have them send a post card to the CIE Registrar and ask for full information – MAKE SURE YOUR NAME and STUDENT NUMBER ARE ON THE CARD. (This insures your proper credit.)
4. We will see to it that he gets the complete CIE story (of course your encouraging comments will help). When the enrollment is received you will receive your award.

To make your job a bit easier, we will send you a supply of printed post cards that don't even require postage stamps. Send a card or letter to

Registrar
Cleveland Institute of Electronics
1776 East 17th Street
Cleveland, Ohio 44114

and you will promptly receive a supply of Student Referral Cards.

Don't forget, a separate award for each and every new student that enrolls as the result of your identifiable referral. *Make sure your prospects mention your name and number.*

CLEVELAND INSTITUTE OF ELECTRONICS / CLEVELAND, OHIO

electronics

CLEVELAND INSTITUTE OF ELECTRONICS / CLEVELAND, OHIO

Roots, Proportion and Negative Numbers

2102-2

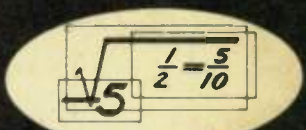

An AUTO-PROGRAMMED™ Lesson

ABOUT THE AUTHOR

Bernard D. Ross, a member of the Technical Staff of the Cleveland Institute of Electronics, has had many years of practical experience in electronics. His career has included work as a technician at the Cyclotron and Servomechanisms Laboratories at the Massachusetts Institute of Technology and the Magnetron Laboratory of the Raytheon Company.

Mr. Ross, a former radio ham, graduated from the Electrical Course at Lowell Institute, and attended the Massachusetts Institute of Technology in Electrical Engineering. He served in the Navy during World War II.

The author has been employed as a Senior Handbook Writer for the Republic Aviation Corp., Designers for Industry, and Thompson Ramo Wooldridge and as assistant editor for Machine Design. He is a member of the Society for Technical Writers and Publishers.

This is an AUTO-PROGRAMMED* Lesson exclusive with the Cleveland Institute of Electronics. It is your assurance of the finest in technical education and training.

*Trademark

Accredited by the Accrediting Commission of the National Home Study Council

The Accrediting Commission has been approved by the U.S. Office of Education as a "nationally recognized accrediting agency".

CLEVELAND INSTITUTE OF ELECTRONICS

Roots, Proportion and Negative Numbers

By BERNARD D. ROSS
Technical Staff
Cleveland Institute of Electronics

2102-2

In this lesson you will learn...

Frontispiece: *An electronic wave analyzer is used in making wind tunnel tests.* Courtesy, Spectral Dynamics Corporation of San Diego

Library of Congress Catalog Card Number: 63-12726

THIRD EDITION First Revised Printing January, 1967.

2102-2

A chat with your instructor

In this lesson you will study square roots, the use of square roots in formulas, the properties of a right triangle, ratios and proportions, how negative numbers are used in electronics, and how to sum up voltages around a series circuit or loop.

This is a wide-ranging assignment, and I advise you to extend your study over regular daily periods so that you will absorb the assignment topic by topic and not try to digest large amounts of learning at irregular intervals.

You may find the most difficult part of this lesson is learning to extract the square root. As explained in the topic on square roots, never forget the importance of first pointing off a number into periods, starting at the decimal point. This is such a simple operation that many beginning students think it is unnecessary. As a result, failing to point off a number into periods is the most common cause of error in extracting the square root.

Pay particular attention to topics on ratio and proportion. No other subject in mathematics will be of as much help to you in understanding electronics. Almost every lesson in this course and almost every article on electronics that you will read will make some reference to a ratio or a proportion.

The topics in this lesson have been carefully selected to cover the facts you will need to know in order to handle practical problems in electronics. Since there is nothing in this lesson that you will not need later, there is nothing in this lesson that you can afford to hurry through.

Make regular study a habit. It will make learning easier and will help you retain what you have already learned.

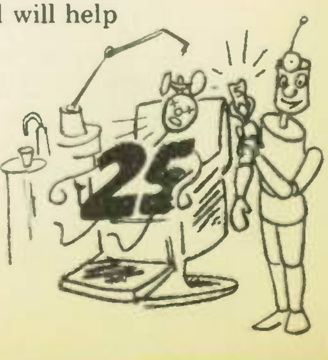

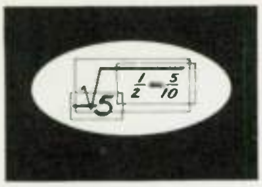

Using Roots, Proportions, and Negative Numbers to Solve Electronics Problems

ROOTS

1 THE MEANING OF ROOTS . . . The *square root* of a number is the value which, when raised to the second power, will give that number. Thus, the square root of 64 is 8, because $8^2 = 8 \times 8 = 64$.

The symbol for finding a square root is the radical sign, $\sqrt{}$. For example, $\sqrt{64}$ means "the square root of 64."

The *cube root* of a number is the value which, when raised to the third power, will give that number. Thus, the cube root of 8 is 2, because $2^3 = 2 \times 2 \times 2 = 8$.

The symbol for finding a cube root is the radical sign with a small 3 placed at the upper left. For example, $\sqrt[3]{8}$ means "the cube root of 8."

Roots greater than the cube root are indicated by using a higher number by the radical sign. Thus, $\sqrt[5]{32}$ means "the fifth root of 32," which is 2 because $2^5 = 2 \times 2 \times 2 \times 2 \times 2 = 32$.

WHAT HAVE YOU LEARNED?

1. $\sqrt{4}$ = 2
2. $\sqrt{25}$ = 5
3. $\sqrt{81}$ = 9
4. $\sqrt{144}$ = 12
5. $\sqrt{1}$ = 1
6. $\sqrt{0}$ = 0
7. $\sqrt[3]{27}$ = 3
8. $\sqrt[4]{16}$ = 2
9. $\sqrt{36} + \sqrt{49}$ = 13
10. $\sqrt{9 + 16}$ = 7 or 5

11. If 10 kw (kilowatts) of power is supplied to a d-c circuit and the resistance of the circuit is 100 ohms, the current flow is 10 amperes. (HINT: $I = \sqrt{\frac{P}{R}}$, where I is in amperes, P is in watts, and R is in ohms.)

1. 2 2. 5 3. 9 4. 12 5. 1 6. 0 7. 3 8. 2

9. 13 . . . $\sqrt{36} + \sqrt{49} = 6 + 7 = 13$

10. 5 . . . $\sqrt{9 + 16} = \sqrt{25} = 5$

11. 10 . . . $I = \sqrt{\frac{P}{R}} = \sqrt{\frac{10 \times 1000}{100}} = \sqrt{100} = 10$

2 SEPARATING NUMBERS INTO PERIODS

. . . The first step in extracting the square root of a number is to point off the number into *periods* of two figures each *starting at the decimal point* and going out to both the right and left.

Example . . . Point off the number 24,656.213.

Solution . . . 2′46′56.21′30

Explanation . . . You can rapidly point off periods by inserting marks after each period, 2′46′56.21′30, *starting from the decimal point* and going to both left and right. Notice that a zero has been added at the end of the number to complete the second period to the right of the decimal point. Notice also that the comma used to point off a number in thousands is *not* used when a number is pointed off into periods.

For every period in the number, there will be one digit in the root. The root of 2′46′56.21′30, for example, is 157.02. This has three digits in front of the decimal point and two digits following to correspond to the three periods in front of the decimal point in the number and the two periods following.

WHAT HAVE YOU LEARNED?

Separate the following numbers into periods as required for extracting the square root. Add zeros where necessary to form at least four periods.

1. 3′64,′871.′10′
2. ′75,′000.′21′
3. 8′7,′823.′00
4. 5.′67′80′00
5. ′23.′00′00′00
6. 2.′25′00′00
7. 0.′08′00′00′00
8. 0.′00′60′00′00
9. 5.′00′00′00
10. 4′21.′70′00

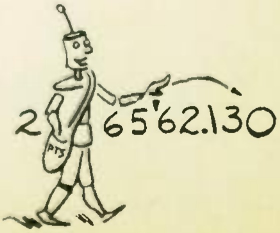

ANSWERS

1. 36′48′71.10
2. 7′50′00.21
3. 8′78′23.00 . . . Since a decimal point is not shown in the given number, it is understood to be located at the end of the number.
4. 5.67′80′00
5. 23.00′00′00
6. 2.25′00′00
7. 0.08′00′00′00
8. 0.00′60′00′00
9. 5.00′00′00
10. 4′21.70′00

3 WORKING A SQUARE ROOT PROBLEM . . . The method can be learned best from the following example.

Example . . . Find the square root of 5.4. Carry the answer out to four significant figures.

Solution . . .

```
          5.40′00′00′  |2.323  = 2.323, ans.
          4
    43  | 1 40
        | 1 29
   462    | 11 00
          |  9 24
  4643      | 1 76 00
            | 1 39 29
```

Explanation . . . This explanation is divided into the steps that you should take when you work square root problems.

1. *Divide the original number into periods.* Add sufficient zeros to make four periods, so that the root can be worked out to four figures.

2. *Find the largest square in the left-hand period and use its root as the first digit of the answer.* The number in the left-hand period is 5. The largest square that will fit into 5 is 4. Write 4 underneath the 5, and place a 2, that is, the root of 4, in the box as the first digit of the answer.

3. *Find the first remainder.* Subtract 4 from 5 and bring down the next period, 40, joining it to the remainder 1. This gives 140 as the *first remainder*. Notice that for square roots, one period at a time is brought down.

4. *Double the root already found and add a zero for a trial divisor.* Write this value at the left of the first remainder. The problem so far will look like this:

```
      5.40′00′00  |2
      4
  40 | 1 40
```

5. *Find how many times the first trial divisor will go into the first remainder.* Because 40 will go into 140 three times, write the number 3 as the second digit of the answer and also write 3 in place of the zero at the end of the divisor. Now the problem looks like this:

```
        5.40'00'00  |23
        4
   43  |1 40
```

6. *Multiply the corrected divisor by the number just placed in the answer, and place the product underneath the first remainder.* Thus, 43 × 3 = 129, and this number is placed underneath the 140.

7. *Subtract and bring down the next period* to form the second remainder, which in this example is 1100.

8. Find the trial divisor, as before, by doubling the partial answer and adding a zero at its end. Write this second trial divisor, 460, to the left of the second remainder.

9. Because the trial divisor will go into 1100, the trial remainder, twice, insert a 2 as the third digit of the answer and also replace the 0 at the end of the trial divisor with the 2, giving 462.

10. Multiply 462, the corrected divisor, by the digit 2 just placed in the answer, 2 × 462 = 924, and enter the product under the second remainder. So far the work looks like this:

```
        5.40'00'00  |232
        4
   43  |1 40
       |1 29
  4 62    |11 00
          |  9 24
```

11. The rest of the solution is a repetition of steps already explained. Subtract the number 924 from 1100, and bring down the next period to give a third remainder of 17600. Double the partial root 232 and add a zero at the end to get the third trial divisor, 4640, which can be divided into 17600 three times. Therefore, write a 3 as the fourth digit of the root and change the zero at the end of the trial divisor to a 3.

12. *Locate the decimal point.* Notice there is one period to the left of the decimal point and there are three periods to the right. Hence, in the root, 2323, there will be one digit to the left of the decimal point and three digits to the right, or 2.323.

13. Check your answer. Does 2.323 × 2.323 approximately equal the original number, 5.4?

WHAT HAVE YOU LEARNED?

1. $\sqrt{\overset{7}{5}35{,}824}$ = 73 2

2. $\sqrt{17.90}$ = 4.23

3. $\sqrt{3807}$ = 61.7

4. $\sqrt{0.679}$ = 0.824

5. $\sqrt{109{,}600}$ = 331

ANSWERS

```
1. 732 . . .      53'58'24 |732
                  49
           143   |4 58
                 |4 29
                  |29 24
          1462    |29 24
```

2. 4.23 3. 61.7 4. 0.824 5. 331

4 MORE SQUARE ROOT PROBLEMS . . .

Example . . . $\sqrt{4451}$ = ________

```
SOLUTION . . .     44'51.00 | 66.7 = 66.7, ans.
                   36
             126  | 8 51
                  | 7 56
            1327   | 95 00
                   | 92 89
```

Explanation . . . Finding the square root of 4451 presents no unusual difficulty until an attempt is made to multiply the trial divisor, 120, by 7, which appears to be the second digit of the root, and to subtract this product from the first remainder:

```
     44'51.00'00 | 67
     36
 127| 8 51
    | 8 89
```

Because 7 × 127 is greater than 851, it is necessary to change 7, the apparent second digit of the root, to the next lower number. Thus the partial root becomes 66, the divisor becomes 126, and the rest of the problem is solved in the regular way.

Example . . . $\sqrt{6513}$ = ________

```
SOLUTION . . .     65'13.00 |80.7
                   64
            1607  | 1 13 00
                  | 1 12 49
```

EXPLANATION . . . In the usual manner, the first remainder is found to be 113. The work so far is as follows:

```
          65'13.00 |8
          64
    160 | 1 13
```

But 160 can not be divided into 113. Therefore, a zero is placed in the root as the second digit. A zero is also added to the end of the divisor 160, making the trial divisor 1600. Then the next period is brought down. This gives:

```
          65'13.00 |80
          64
   1600 | 1 13 00
```

The divisor, 1600, will go into the dividend 7 times; therefore, the 7 is written as the third digit of the root, and it is also used in place of the last zero in 1600. The work now proceeds in the regular manner.

WHAT HAVE YOU LEARNED?

Extract the following square roots. It is satisfactory to carry the answers to three significant figures, although a greater degree of accuracy is usually given in the answers to these problems for the benefit of those students who may wish to practice extracting the square root to more significant figures.

1. $\sqrt{93.421}$
2. $\sqrt{0.000014}$
3. $\sqrt{12{,}251}$
4. $\sqrt{7574}$
5. $\sqrt{757.4}$
6. $\sqrt{25}$
7. $\sqrt{2.5}$
8. $\sqrt{0.25}$
9. $\sqrt{0.00025}$
10. $\sqrt{2}$
11. $\sqrt{20}$
12. $\sqrt{0.0000004}$
13. $\sqrt{64{,}000{,}000}$
14. $\sqrt{6{,}400{,}000}$
15. $\sqrt{3.811}$
16. $\sqrt{0.6369}$
17. $\sqrt{10}$
18. $\sqrt{100}$
19. $\sqrt{1000}$
20. $\sqrt{4.5}$
21. $\sqrt{50}$
22. $\sqrt{802}$
23. $\sqrt{0.000001}$

ANSWERS

```
1. 305.648 . . .      9'34'21.00'00'00' |305.648
                      9
              605  | 34 21
                   | 30 25
              6106   | 3 96 00
                     | 3 66 36
              61124    | 29 64 00
                       | 24 44 96
              611288     | 5 19 04 00
                         | 4 89 03 04
```

```
2. 00.00'00'14'00'00'  |0.00374
                  9
           67  | 5 00
               | 4 69
           744   | 31 00
                 | 29 76
```

3. 110.684
4. 87.0287
5. 27.5209
6. 5
7. 1.58114
8. 0.5
9. 0.01581
10. 1.41421
11. 4.47214
12. 0.00063246
13. 8000
14. 2529.82
15. 1.952
16. 0.79806
17. 3.16228
18. 10
19. 31.6228
20. 2.1213
21. 7.07107
22. 28.3196
23. 0.001

5 SOLVING FORMULAS CONTAINING ROOTS . . . When a root appears as a term in a problem, *first find the root* and then solve the problem in the usual way.

EXAMPLE . . . $6 + \sqrt{3^2 + 4^2} =$ _______

SOLUTION . . . $6 + \sqrt{3^2 + 4^2} = 6 + \sqrt{9 + 16}$

$= 6 + \sqrt{25} = 6 + 5 = 11$, *ans.*

WHAT HAVE YOU LEARNED?

1. In the formula $K = \dfrac{M}{\sqrt{L_p L_s}}$ if $M = 20$, $L_p = 10$, and $L_s = 30$, $K =$ 1.16______.

2. In the formula $Z = \sqrt{R^2 + (X_L - X_C)^2}$, if $R = 5$, $X_L = 16$, and $X_C = 9$, $Z =$ _____8.60

3. In the formula $f = \dfrac{1}{2\pi\sqrt{LC}}$, if $L = 10$ and $C = 0.002$, $f =$ 1.13_____.

(NOTE: π, the Greek letter pi, is a value that indicates the relationship between the diameter of a circle and its circumference, and it is always

.01

equal to 3.1416. Memorize this value. For most practical calculations, though, 3.14 may be used as the value of π.)

4. In the formula $I = \sqrt{\frac{P}{R}}$, if $P = 21$ and $R = 0.7$, $I =$ 5.48.

5. An electric iron which has a resistance of 60 ohms draws 1.5 kw of power. Current flow through the iron is 5 amperes.

(HINT: Use the formula $I = \sqrt{\frac{P}{R}}$ where I is in amperes, P is in watts, and R is in ohms.)

6. If a resistor is marked 10,000 ohms, 100 watts, it can carry .1 amperes.

ANSWERS

1. 1.16 . . . $K = \frac{M}{\sqrt{L_p L_s}} = \frac{20}{\sqrt{10 \times 30}} = \frac{20}{\sqrt{300}}$

$= \frac{20}{17.3} = 1.16$

2. 8.60 . . . $Z = \sqrt{R^2 + (X_L - X_C)^2} = \sqrt{5^2 + (16 - 9)^2}$

$= \sqrt{25 + 7^2} = \sqrt{25 + 49} = \sqrt{74} = 8.60$

3. 1.13 . . . $f = \frac{1}{2\pi\sqrt{LC}} = \frac{1}{2 \times 3.14\sqrt{10 \times 0.002}}$

$= \frac{1}{6.28\sqrt{0.02}} = \frac{1}{6.28 \times 0.141} = \frac{1}{0.885} = 1.13$

4. 5.48 . . . $I = \sqrt{\frac{P}{R}} = \sqrt{\frac{21}{0.7}} = \sqrt{30} = 5.48$

5. 5 . . . 1.5 kw = 1500 watts. Then

$I = \sqrt{\frac{P}{R}} = \sqrt{\frac{1500}{60}} = \sqrt{25} = 5$ amp

6. 0.1 . . . $I = \sqrt{\frac{P}{R}} = \sqrt{\frac{100}{10{,}000}} = \sqrt{\frac{1}{100}} = \frac{1}{10} = 0.1$ amp

6 THE RIGHT TRIANGLE . . . The triangle in Fig. 1 is called a *right triangle* because one of its sides, *BC* (the line extending between points *B* and *C*), is perpendicular to one of the other sides, *AC* (the line extending between points *A* and *C*). That is, side *AC* is "square" to side *BC*. The angle at *C* is 90° and is called a *right angle*.

The longest side of a right triangle is called its *hypotenuse*. The hypotenuse is always opposite the right angle. The other two sides are called the *legs*. In Fig. 1, *AB* is the hypotenuse and *AC* and *BC* are the legs.

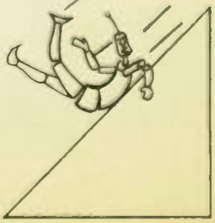

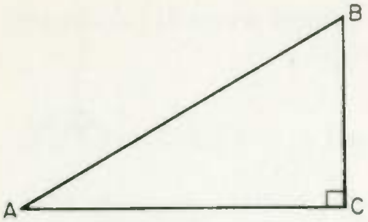

Fig. 1 **A right triangle.**

WHAT HAVE YOU LEARNED?

1. A right angle contains 90 degrees.

2. There are 2 legs in a right triangle.

3. The hypotenuse is always located opposite the RigHT angle.

ANSWERS

1. 90 2. 2 3. Right

7 FINDING THE HYPOTENUSE . . . In practical electronics problems it is often necessary to find the length of the hypotenuse when the lengths of the other two sides of a triangle are known.

RULE . . . *The hypotenuse of a right triangle is equal to the square root of the sum of the squares of the other two sides,* or

$$AB = \sqrt{AC^2 + BC^2}$$

where AB, AC, and BC are all sides of the triangle as shown in the Fig. 1.

EXAMPLE . . . In Fig. 1, if $BC = 32$ and $AC = 21$, $AB =$ ________.

SOLUTION . . . $AB = \sqrt{21^2 + 32^2}$

$= \sqrt{441 + 1024}$

$= \sqrt{1465} = 38.3$, *ans.*

Right triangles find much use in electronics calculations as applied to a-c circuits. A typical circuit with resistance R, reactance X, and impedance Z and its representation by a right triangle are shown in Fig. 2.

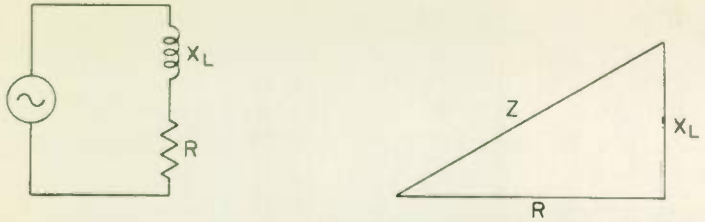

Fig. 2 A series a-c circuit and its representation by a right triangle.

EXAMPLE . . . In the formula $Z = \sqrt{X^2 + R^2}$, if $X = 120$ ohms and $R = 160$ ohms, $Z =$ ________ ohms.

SOLUTION . . . $Z = \sqrt{X^2 + R^2} = \sqrt{120^2 + 160^2}$

$= \sqrt{14{,}400 + 25{,}600} = \sqrt{40{,}000}$

$= 200$ ohms, *ans.*

WHAT HAVE YOU LEARNED?

1. In Fig. 1, if $BC = 2.1$ and $AC = 1.69$, $AB =$ 2.70.

2. If a room is 12 ft wide and 20 ft long, the distance between opposite corners of the room is 23.3 feet.

3. An a-c circuit consisting of a resistor and a capacitor in parallel is shown in Fig. 3. The total current flow I_T is equal to the hypotenuse of a right triangle in which the current through the resistor I_R is equal to one leg and the current through the capacitor I_C is equal to the other leg. If $I_C = 12$ amp and $I_R = 15$ amp, $I_T =$ 19.2 amperes.

4. A series a-c circuit consists of an inductor and a resistor, as shown in Fig. 2. If $X_L = 25$ ohms and $R = 35$ ohms, $Z =$ 43 ohms.

Fig. 3

ANSWERS

1. 2.70
2. 23.3 . . . $\sqrt{12^2 + 20^2} = \sqrt{144 + 400} = \sqrt{544} = 23.3$ ft
3. 19.2 . . . $I_T = \sqrt{12^2 + 15^2} = \sqrt{144 + 225} = \sqrt{369} = 19.2$ amp
4. 43.0 ohms

RATIO AND PROPORTION

8 MEANING OF A RATIO . . . Two quantities may be compared by dividing the magnitude of the first quantity by the magnitude of the second. The quotient obtained is called the *ratio* of the two quantities. Thus, the ratio of 8 amp to 4 amp is $\frac{8}{4}$, or 2, while the ratio of 4 amp to 8 amp is $\frac{4}{8}$, or 0.5.

If the plate voltage on a tube is 300 volts and the screen voltage on the tube is 200 volts, how can we express the relationship between the two voltages? We can say that the ratio of the plate voltage to the screen voltage is 300 to 200. (This can also be written—not said—as 300:200.) In fractional form the ratio is $\frac{300}{200}$, or $\frac{3}{2}$.

It is much better to say that the ratio of the plate voltage to the screen voltage is 3 to 2 than to say 300 to 200, because the mind can more easily comprehend the exact relationship between the two values when smaller numbers are used. Since $\frac{300}{200} = \frac{3}{2} = 1.5$, we can say that the ratio of the plate voltage to the screen voltage is 1.5, which may also be expressed as 1.5 to 1 or 1.5:1.

In relating two numbers by a ratio, make sure they represent quantities that are measured *in the same units or in related units*. For example, the ratio of 6 in. to 2 ft is *not* $\frac{6}{2}$. We must first change 2 ft to 24 in., so that both quantities are in the same units. The ratio then is $\frac{6}{24} = \frac{1}{4}$, or 0.25.

WHAT HAVE YOU LEARNED?

1. (a) The ratio 21 to 7 is 3 TO 1.
   (b) The ratio 7 to 21 is 1 TO 3.

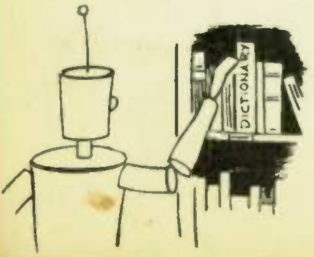

2. A man earns \$90 a week and saves \$10 each week. The ratio of his savings to earnings is 1 TO 9.

3. Electrolyte for a bank of storage batteries consists of 5 qt of sulfuric acid mixed with 4 gal of water. The ratio of acid to water is 5 TO 16. (HINT: 4 qt = 1 gal)

4. To deliver maximum undistorted power to a load, the ratio of the *load impedance* to the *plate impedance* in the output stage of a vacuum-tube amplifier should be 2 to 1. If the plate impedance of the output is 6000 ohms, the load impedance should be 12 K ohms.

5. The ratio of the circumference of a circle to its diameter is 3.14, a value which is usually represented by the symbol π. If a circle has a diameter of 8 in., its circumference is 25.1 in.

6. If a circle has a circumference of 8 in., its diameter is 2.55 inches.

ANSWERS

1. (a) This ratio may be written as $\frac{21}{7}$, $\frac{3}{1}$, 3 to 1, 3:1, or 3.

(b) $\frac{7}{21}$, $\frac{1}{3}$, 0.333, 1:3, or 1 to 3.

2. $\frac{10}{90}$, $\frac{1}{9}$, 0.111, 1:9, or 1 to 9.

3. $\frac{5}{16}$, 5:16, 5 to 16, or 0.313 . . . 5 qt of acid is mixed with 4 gal of water. Both quantities must be in the same units before their ratio can be found. 4 × 4 = 16 qt. Therefore, the ratio of acid to water will be $\frac{5}{16}$, etc.

4. 12,000 ohms . . . You may interpret the problem statement as

$$\frac{\text{load impedance}}{\text{plate impedance}} = \frac{2}{1}$$

Since the ratio is 2 to 1, the load impedance should be twice the plate impedance. Therefore, if the plate impedance is 6000 ohms, the load impedance should be 12,000 ohms.

5. 25.1 in . . . $\frac{\text{circumference}}{\text{diameter}} = 3.14$. Therefore, the circumference must be 3.14 times the diameter, and $3.14 \times 8 = 25.1$ in.

6. 2.55 in . . . $\frac{8}{3.14} = 2.55$ in.

9 MEANING OF PROPORTION . . . The ratio of 10 to 5 is $\frac{10}{5}$, or 2, and the ratio of 8 to 4 is $\frac{8}{4}$, or 2. Therefore $\frac{10}{5} = \frac{8}{4}$, because each ratio is equal to 2. Such a statement of the equality of two ratios is

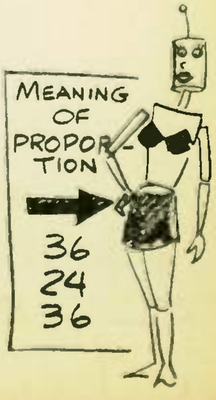

called a *proportion. A proportion is an equation that states that two ratios are equal.*

The above proportion should be read, "10 is to 5 as 8 is to 4." The values 10, 5, 8, and 4 are called the *terms* of the proportion. *Every proportion has four terms.*

It is important to note that an equation of the form $I = \frac{E}{R}$ or $E = \frac{P}{I}$ can be rewritten as $\frac{I}{1} = \frac{E}{R}$ or $\frac{E}{1} = \frac{P}{I}$, and therefore these equations may also be considered as proportions. Thus $\frac{I}{1} = \frac{E}{R}$ can be read as I is to 1 as E is to R.

WHAT HAVE YOU LEARNED?

1. A proportion is an equation stating that Two ratios are equal.
2. There are 4 terms in a proportion.
3. The proportion $\frac{3}{10} = \frac{18}{60}$ is read $3:10 = 18:60$.
4. The equation $E = \frac{P}{I}$, if considered as a proportion, is read $\frac{E}{1} = P:2$.

ANSWERS

1. Two 2. 4 3. 3 is to 10 as 18 is to 60
4. E is to 1 as P is to I

10 LAW OF PROPORTION . . . In most practical problems, three of the four terms which make up a proportion are given and the fourth term must be found. To find this fourth term, we make use of the important principle that *in a proportion the cross products are equal.* The meaning of the term "cross products" is illustrated in Fig. 4.

When three terms of a proportion are known, the fourth term, or the unknown term, is represented by a symbol. If there is no standard symbol for the unknown term, the letter x is commonly used. For ex-

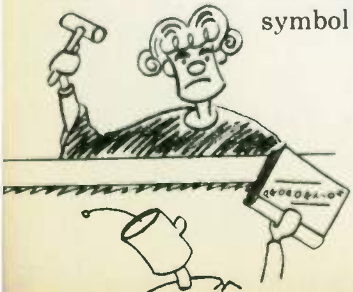

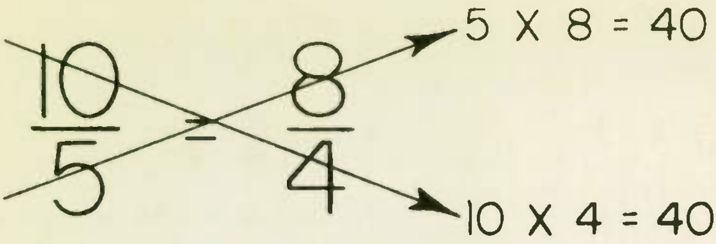

Fig. 4 **In any proportion the cross products are equal.**

ample, the proportion 10 is to 5 as 8 is to *what* would be written as $\frac{10}{5}=\frac{8}{x}$.

We can find the value of the unknown term by remembering that in a proportion the cross products must be equal. In the proportion in the preceding paragraph one cross product is $5 \times 8 = 40$; therefore, the other product, $10 \times x$ must also equal 40. If x is 4, this condition will be satisfied. And we found the value 4 by dividing 40 by 10.

This leads to the following rule for finding the unknown term in a proportion.

RULE . . . To find the unknown term of a proportion, *find the cross product both terms of which are known and divide that cross product by the known value in the other cross product.*

EXAMPLE . . . If $\frac{x}{11}=\frac{12}{25.3}$, $x =$ ________.

SOLUTION . . . $\frac{x}{11}=\frac{12}{25.3}$

$A \quad 11 \times 12 = 132$

$B \quad x \times 25.3 = 25.3x$

$$x = \frac{132}{25.3} = 5.22, \textit{ ans.}$$

EXPLANATION . . . Both terms are known in cross product A. Their product is 132. This product is divided by the known term, 25.3, in cross product B.

WHAT HAVE YOU LEARNED?

In Problems 1 to 7, solve for x:

1. $\frac{18}{6}=\frac{3}{x}$ X = 1

2. $\frac{17.5}{157.5}=\frac{x}{27}$ X = 3

3. $\frac{30}{210}=\frac{7}{x}$ X = 49

4. $\frac{15}{x}=\frac{27}{675}$ X=375

5. $\frac{100}{7}=\frac{x}{1.75}$ X = 25

6. $\frac{x}{20}=\frac{30}{12}$ X = 50

7. $3.25:4.33 = x:83$ X = 62.3

8. Given the formula $E = \frac{P}{I}$, where E is 60 and I is 10, find the value of P. 600

9. Given the formula for the Q of a circuit, $Q = \frac{X_L}{R}$, in which X_L and R are in ohms, what value must R be to give a Q of 100 when X_L is 500 ohms? 5

10. In a voltage transformer, the ratio of the secondary voltage E_s to the primary voltage E_p is equal to the ratio of the number of turns on the secondary winding N_s to the number of turns on the primary winding N_p. Write this statement as a proportion.

$E_s:E_p = N_s:N_P$

11. A voltage transformer has 200 turns on its primary and 800 turns on its secondary. If 115 volts is applied to the primary winding of this transformer, what is the secondary voltage? 460V

ANSWERS

1. 1 . . . $x = \frac{6 \times 3}{18} = 1$

2. 3 3. 49 4. 375 5. 25 6. 50

7. 62.3 . . . Before attempting to solve a proportion written in the form $A:B = C:D$, always rewrite it in the form $\frac{A}{B}=\frac{C}{D}$.

8. 600 . . . Substitute 60 for E and 10 for I in $\frac{E}{1}=\frac{P}{I}$, giving $\frac{60}{1}=\frac{P}{10}$. Then solve the proportion by cross products: $P = \frac{60 \times 10}{1} = 600$.

9. 5 ohms . . . By using $\frac{Q}{1}=\frac{X_L}{R}$ and substituting the given values, $\frac{100}{1}=\frac{500}{R}$. By solving the proportion for R, we have $R = \frac{500 \times 1}{100} = 5$.

10. $\frac{E_s}{E_p} = \frac{N_s}{N_p}$

11. 460 volts . . . By substituting in the proportion of Problem 10, we have

$$\frac{E_s}{115} = \frac{800}{200}$$

$$E_s = \frac{115 \times 800}{200} = 460 \text{ volts}$$

11 MEANING OF DIRECT PROPORTION . . . One quantity is *directly proportional* to another quantity when the ratio of any two values of the first quantity is equal to the ratio of the two corresponding values of the other quantity.

For example, in the formula $I = \frac{E}{R}$, let us suppose R is fixed at 10 ohms. *Then, as E increases, I increases* (see Fig. 5). Suppose first that E = 40 volts. We can then write

$$I_1 = \frac{E_1}{R} = \frac{40}{10} = 4 \text{ amp}$$

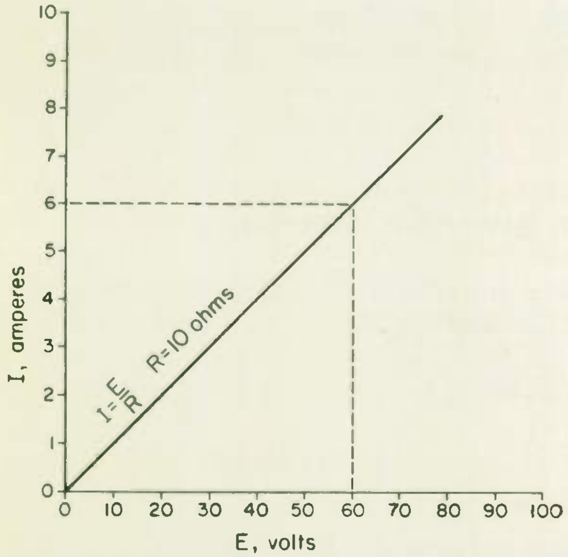

Fig. 5 Direct proportion. In the formula $I = \frac{E}{R}$, I is directly proportional to E: as E increases, I increases a proportional amount. The graph shows the values of I (when R is constant at 10 ohms) as E varies. For example, when E = 60 volts, I = 6 amp.

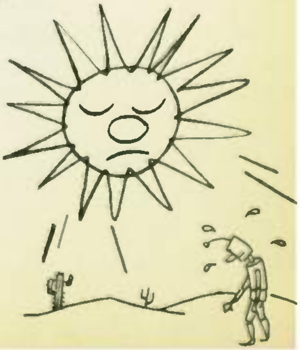

Now suppose that $E = 60$ volts, and we can write

$$I_2 = \frac{E_2}{R} = \frac{60}{10} = 6 \text{ amp}$$

The ratio of the first current to the new current is

$$\frac{I_1}{I_2} = \frac{4 \text{ amp}}{6 \text{ amp}} = \frac{2}{3}$$

The ratio of the first voltage to the new voltage is

$$\frac{E_1}{E_2} = \frac{40 \text{ volts}}{60 \text{ volts}} = \frac{2}{3}$$

Since the ratio of the two currents is equal to the ratio of the two voltages, the current in a d-c circuit, when the resistance is constant, is directly proportional to the voltage. We would write out this proportion as follows:

$$\frac{\text{first current}}{\text{second current}} = \frac{\text{first voltage}}{\text{second voltage}} = \frac{I_1}{I_2} = \frac{E_1}{E_2}$$

WHAT HAVE YOU LEARNED?

1. (a) In the equation $P = 10\,I$, P is diRECTly proportional to I.
   (b) As I increases, P iNCREASES.
   (c) If $I_1 = 10$, $P_1 =$ 100.
   (d) If $I_2 = 100$, $P_2 =$ 1000.
   (e) $\frac{I_1}{I_2} = \frac{1}{10}$.
   (f) $\frac{P_1}{P_2} = \frac{1}{10}$.
   (g) Therefore, the ratio of values of P can be equated to the ratio of the two corresponding values of I as follows: $I_1 : I_2$ = $P_1 : P_2$.

2. The reactance of an inductor is directly proportional to frequency. If the reactance X of a certain inductor is 100 ohms at 5 kc, the reactance is 250 ohms at 12.5 kilocycles.

ANSWERS

1. (a) Directly (b) Increases (c) 100 . . . $P = 10 \times I = 10 \times 10 = 100$

(d) 1000 (e) $\frac{1}{10}$ . . . $\frac{10}{100} = \frac{1}{10}$ (f) $\frac{1}{10}$ (g) $\frac{I_1}{I_2} = \frac{P_1}{P_2}$

2. 12.5 . . . $X_1 = 100$ ohms, $f_1 = 5$ kc, $X_2 = 250$ ohms, $f_2 =$ ______ kilocycles. Then

$$\frac{X_1}{X_2} = \frac{f_1}{f_2}$$

$$\frac{100}{250} = \frac{5}{f_2}$$

The cross product with the two known terms is $5 \times 250 = 1250$. Divide this cross product by the known term, 100, in the other cross product, $100 f_2$:

$$\frac{1250}{100} = 12.5 \text{ kc} = f_2$$

12 **SETTING UP PROBLEMS IN DIRECT PROPORTION** . . . Following the method of Topic 10, no one has any difficulty in working out problems in proportion. Setting up problems in proportion is equally easy—but only if you go at it in the right way. The following example shows you how.

Example . . . An automobile traveling 35 miles per hour goes 150 miles in a certain length of time. If the speed of the automobile was changed to 55 miles per hour, what will be the distance covered in the same length of time?

Solution . . .

	Speed	Distance
Original Values	35 mph	150 miles
Values changed to	55 mph	x miles

$$\frac{150}{x} = \frac{35}{55};\ x = 236 \text{ miles, } \textit{ans.}$$

Explanation . . . You must begin every proportion problem by making a table as above. First decide what are the two types of values involved in this proportion. In this example, the two types are speed and distance. Hence, we write speed and distance as the column headings for our table, as shown. Two sets of values are involved. One set is the speed and distance first considered (35 mph and 150 miles). In the table above we have entered this set of values in the first row and called them "original values". The other set is the speed and distance after the change in speed has been made. In the table we have titled the two for these values as "values changed to". The speed for this set of values is 55 mph, and we call the distance x, since we don't as yet know its value.

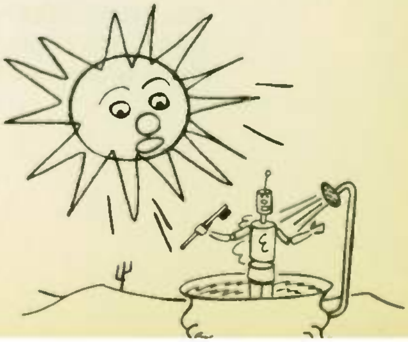

Having completed the table, we can now write down the proportion directly from the table, and then find the value of x in the proportion. Since ratios must always be made from like units, the two speed values make up one of the ratios $\left(\frac{35 \text{ mph}}{55 \text{ mph}}\right)$ of the proportion, and the two distance values form the other ratio $\left(\frac{150 \text{ miles}}{x \text{ miles}}\right)$.

In making up the table for the above example, how do you know whether to put the speed column or the distance column on the left? It makes no difference. Similarly, it makes no difference whether you use "original values" or "values changed to" as the first row. Three other ways to make up the table of the above example are shown below. Although each table represents a different proportion, if you will work out the value for x in each of the three proportions, you will get 236 miles in each case.

	Distance	Speed
Original values	150 miles	35 mph
Values changed to	x miles	55 mph

$$\frac{150}{x}=\frac{35}{55}\text{; } x = 236 \text{ miles, } \textit{ans.}$$

	Speed	Distance
Values changed to	55 mph	x miles
Original values	35 mph	150 miles

$$\frac{55}{35}=\frac{x}{150}\text{; } x = 236 \text{ miles, } \textit{ans.}$$

	Distance	Speed
Values changed to	x miles	55 mph
Original values	150 miles	35 mph

$$\frac{55}{35}=\frac{x}{150}\text{; } x = 236 \text{ miles, } \textit{ans.}$$

EXAMPLE... The resistance of a copper wire is directly proportional to its length. If a 5-mile length of copper wire has a resistance of 10 ohms, what is the resistance of a 6-mile length of the same wire?

SOLUTION . . .

	Wire length	Resistance
Shorter wire	5 miles	10 ohms
Longer wire	6 miles	x ohms

$$\frac{5}{6} = \frac{10}{x}\text{ ; } x = 12 \text{ ohms, } \textit{ans.}$$

EXPLANATION . . . The two types of values in this proportion are wire length and resistance, and these form the column headings. The shorter of the two wires has a length of 5 miles and a resistance of 10 ohms, and these two values are listed in the row marked "shorter wire". In the bottom row, for the longer wire, 6 miles is listed for wire length, and x for the resistance.

WHAT HAVE YOU LEARNED?

1. The ratio of the primary to secondary voltages of a transformer varies directly with the ratio of primary to secondary turns. If the primary of a transformer has 500 turns and 110 volts is impressed across it, and if the secondary has 23,000 turns, the secondary will deliver 5060 volts.

2. The reactance of an inductor is directly proportional to the frequency of the current through it. If the reactance of a certain inductor is 1500 ohms at 2100 cycles, the reactance will be 7140 ohms at 10,000 cycles.

3. The reactance of an inductance at a certain frequency is 1200 ohms. If the frequency is doubled, the reactance will be 2400 ohms.

4. At very high frequencies the field strength at a receiving antenna a certain distance from the transmitter will be proportional to the frequency of the signal. If the field strength at a certain receiving antenna is 8 mv (millivolts) per meter at a frequency of 100 mc (megacycles), the field strength will be 16 millivolts per meter at a frequency of 200 mc.

5. When resistors are connected in series, the voltage drop across each resistor is directly proportional to the applied voltage. If an applied voltage of 500 volts results in a voltage drop of 80 volts across a certain resistor, an applied voltage of 300 volts will cause a voltage drop of 48 volts across that resistor.

1. 5060 volts . . .

	Voltages	Turns
Primary	110 volts	500 turns
Secondary	x volts	23,000 turns

$$\frac{110}{x} = \frac{500}{23{,}000};\ x = 5060 \text{ volts}$$

2. 7140 ohms . . .

	Reactance	Frequency
Lower frequency	1500 ohms	2100 cycles
Higher frequency	x ohms	10,000 cycles

$$\frac{1500}{x} = \frac{2100}{10{,}000};\ x = 7143 \text{ ohms},$$

or 7140 ohms when rounded off to three significant figures.

3. 2400 ohms . . . Since reactance of an inductor is directly proportional to frequency, doubling the frequency also doubles the reactance.
4. 16 millivolts per meter
5. 48 volts

13 MEANING OF INVERSE PROPORTION . . .

With direct proportion, the only kind discussed so far, an increase in one quantity brings about a corresponding increase in the other. Thus, when the circuit voltage is doubled, the circuit current also doubles, since current is directly proportional to voltage.

There is another kind of proportion, called *inverse proportion,* in which an increase in one quantity results in a *decrease* in the other. An example is the statement that the time required to travel by automobile between two towns is inversely proportional to the speed of the car. If the speed is doubled, the time is reduced to one-half that required at the original speed.

One quantity is *inversely proportional* to another quantity when the ratio of any two values of the first quantity is the reciprocal of the ratio of any two corresponding values of the second quantity.

For example, in the formula $I = \frac{E}{R}$ let us suppose that E is fixed at 10 volts. *Then as R increases, I decreases,* as shown in Fig. 6.

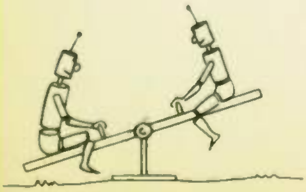

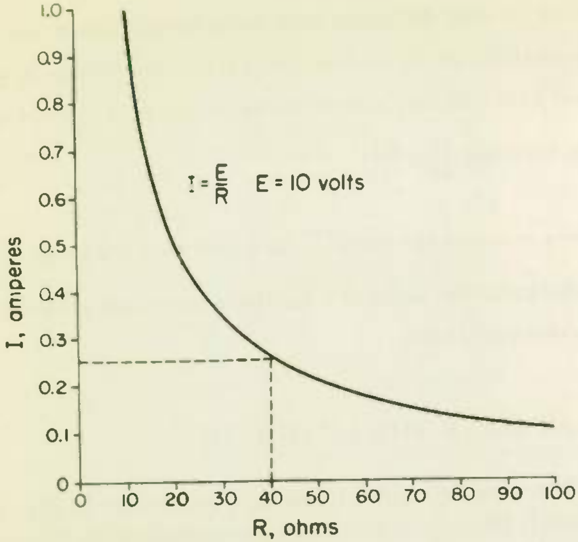

Fig. 6 **Inverse proportion. In the formula $I = \frac{E}{R}$, I is inversely proportional to R: as R increases, I decreases in inverse proportion. The graph shows the values of I (when E is constant at 10 volts) as R varies. For example, when R = 40 ohms, I = 0.25 amp.**

To solve a problem involving inverse proportion, set up two ratios in the same manner as for a problem in direct proportion, as discussed in Topic 11. Now invert one of the ratios, but not both, and equate them to each other. The resulting proportion will be an inverse proportion.

EXAMPLE . . . The resistance of a wire is inversely proportional to its cross-sectional area. If the cross-sectional area of a certain length of wire is 45 circular mils (abbreviated cir mils) and its resistance is 82 ohms, the resistance of the same length of wire with a cross-sectional area of 18 cir mils will be ________ ohms.

SOLUTION . . .

	Area	Resistance
Smaller wire	18 cm	x ohms
Bigger wire	45 cm	82 ohms

$$\frac{18}{45} = \frac{82}{x}\,;\ x = 205 \text{ ohms, } ans.$$

EXPLANATION . . . Make up a table exactly as for direct proportion, and as shown above. From the table, the two ratios involved in the proportion are $\frac{18 \text{ cm}}{45 \text{ cm}}$ and

$\frac{x \text{ ohms}}{82 \text{ ohms}}$. Now we come to the only difference between working a direct proportion and an inverse proportion; in an inverse proportion, invert one of the ratios (either one, but not both). In the example above we inverted $\frac{x}{82}$ to obtain $\frac{82}{x}$. Thus the proportion becomes $\frac{18}{45} = \frac{82}{x}$.

We could just as well have inverted the ratio $\frac{18}{45}$, in which case the proportion would be $\frac{45}{18} = \frac{x}{82}$. Working out the value of x for this proportion, we get 205 ohms, the same value as obtained above.

WHAT HAVE YOU LEARNED?

1. A given circuit includes two parallel branches, as shown in Fig. 7. The current through each branch is inversely proportional to the resistance of that branch. In branch 1 the resistance is 10 ohms and current flow is 6 amps. If the current in branch 2 is 2 amps, find the resistance (R_2) of branch 2.

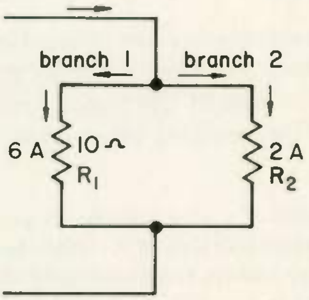

Fig. 7

2. If increasing one quantity to 3 times its original value causes another related quantity to also triple in value, the two quantities are in (a) ____________ proportion. If two quantities are in inverse proportion, and if the first quantity is increased to 4 times its original value, then the second quantity will change to (b) _______________ its original value.

3. The reactance of a capacitor is inversely proportional to the frequency. If the reactance of a certain capacitor is 1500 ohms at 2100 cycles, the reactance will be __________ ohms at 10,000 cycles.

4. The reactance of a capacitor is __________ ohms at 1200 kc (kilocycles) if its reactance is 300 ohms at 680 kc.

5. The reactance of a certain capacitor at a certain frequency is 4800 ohms. If the frequency is tripled, the reactance will be __________ ohms (see Problem 3).

ANSWERS

1. 30 ohms . . .

	Current	Resistance
Branch 1	6 amps	10 ohms
Branch 2	2 amps	x ohms

The two ratios are $\frac{6}{2}$ and $\frac{10}{x}$. Since an inverse proportion is involved, one of the ratios must be inverted. Inverting $\frac{6}{2}$ gives $\frac{2}{6}$. Hence the proportion is $\frac{2}{6} = \frac{10}{x}$.

2. (a) Direct; (b) one-fourth

3. 315 . . . $\frac{1500}{X} = \frac{10{,}000}{2100}$ $\quad X = 315$ ohms

4. 170 . . . $\frac{X}{300} = \frac{680}{1200}$ $\quad X = 170$ ohms

5. 1600 ohms . . . Since the reactance is inversely proportional to the frequency, making the frequency three times its original value will reduce the reactance to one-third its original value.

14 DIRECT OR INVERSE PROPORTION? . . . In the examples and problems so far you have been told whether the proportion is direct or inverse. When you are not this fortunate, deciding which type of proportion is involved is easy if you go about it right. In any case you start in by making up a table for the proportion just as you have been doing. You then decide whether direct or inverse proportion is involved. To do this, note the two column headings in the table (speed and distance in the example on page 19). When the value of one of these headings goes up, does the value of the other heading also go up? If so, you have a direct proportion. If the value of one of the column headings goes down when the other goes up, you have an inverse proportion. In the example on page 19, when the speed increases, the distance also increases, because you know that the faster the car goes, the more distance it will cover in a certain length of time. Hence, the proportion is a direct one.

Example . . . If a full crew of 8 men can do a certain job in 28 days, how long would it take a short crew of 7 men to do the same job?

Solution . . .

	Days	Men
Full crew	28	8
Short crew	x	7

$$\frac{28}{x}=\frac{7}{8};\ x = 32 \text{ days}$$

Explanation . . . Is the proportion direct or inverse? The column headings are days and men. As the number of men increase, the number of days required to do the job will obviously go down. Hence, the proportion is inverse. Hence, of the two ratios in the table, $\frac{28}{x}$ and $\frac{8}{7}$, one must be inverted. We inverted the second, to give the proportion $\frac{28}{x}=\frac{7}{8}$.

WHAT HAVE YOU LEARNED?

1. If a train travels 378 miles in 11 hr, it will travel ________ miles in 17 hr.

2. If a ship sails 256 miles in 11½ hr, it will sail ________ miles in 179 hr.

3. If 16½ ft of coaxial cable costs \$61.87, 28 ft of this same cable will cost ________ .

4. A vernier dial turns 10 revolutions each time the control shaft is turned 3°. The dial will turn ________ revolutions when the shaft is turned 17°.

5. If 10 men can do a job in 20 days, 25 men can do the same job in ________ days.

6. If 7 men can erect a radio tower in 5¼ days, 4 men can erect the tower in ________ days.

7. You are given the formula $M = 2\pi Q^2 rh$. When h is equal to 30, then M is equal to 45. What will be the value of M when h is 72? Assume that the values of Q, π, and r do not change.

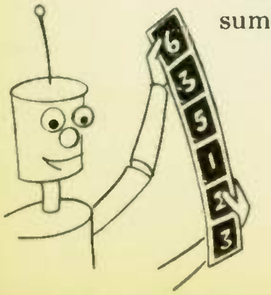

8. You are given the formula $M = \frac{2\pi Q^2 r}{h}$. When h is equal to 30, then M is equal to 45. What will be the value of M when h is 72? Assume that the values of Q, π, and r do not change.

ANSWERS

1. 584 miles . . .

	Distance	Time
Original values	378 miles	11 hours
Values changed to	x miles	17 hours

The two column heading are time and distance. The more time the train travels the farther it will go. Hence, as time increases, distance increases—a direct proportion. The proportion is $\frac{378}{x} = \frac{11}{17}$.

2. 3985 miles . . . A direct proportion is used.

3. \$105 . . .

	Length	Cost
Short length	16.5 feet	\$61.87
Long length	38 feet	x

The more you buy, the more it costs. Hence, as length increases, so does cost increase—a direct proportion. $\frac{16.5}{38} = \frac{61.87}{x}$.

4. 56.7 revolutions . . . A direct proportion, since the more revolutions you give the vernier dial, the further in degrees the control shaft is turned.

5. 8 days . . . An inverse proportion. See Example on page 00.

6. 9.19 days . . . An inverse proportion.

7. 108 . . .

	M	h
Original values	45	30
Values changed to	x	72

Now look at the formula carefully. Notice that the higher the value of h, the higher the value that M must be, since M is obtained by multiplying $2\pi Q^2 r$ by the value of h. Hence, the proportion involved is direct, and is $\frac{45}{x} = \frac{30}{72}$; $x = 108$.

8. 18.75 . . . The table will be identical to the one for Question 7. Studying the formula, we notice that when h becomes higher, M must become less. You are dividing $2\pi Q^2 r$ by h—the bigger the number you divide by, the lesser the quotient must be. Hence, an inverse proportion is involved. Inverting the ratio for M, we have for the proportion $\frac{x}{45} = \frac{30}{72}$.

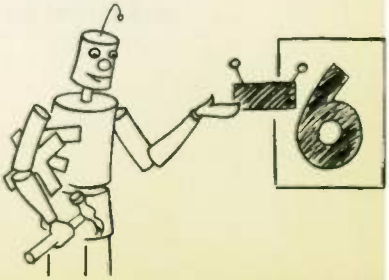

15 PROPORTIONAL TO THE SQUARE OR ROOT

. . . One quantity may be directly or inversely proportional to the square of some other quantity. Or one quantity may be proportional or inversely proportional to the square root of some other quantity.

Example . . .The resistance of a wire is inversely proportional to the square of the diameter of the wire. If a wire 0.15 in. in diameter has a resistance of 70 ohms, what will be the resistance of the same length of wire with a diameter of 0.25 in.?

Solution . . .

	Resistance	Diameter
Small Wire	70 Ω	$(0.15)^2$ in.
Large Wire	x Ω	$(0.25)^2$ in.

$$\frac{x}{70} = \frac{(0.15)^2}{(0.25)^2}$$

$$\frac{x}{70} = \frac{0.0225}{0.0625}$$

$$x = 25.2 \text{ ohms, } ans.$$

Explanation . . . In the table, the diameter values are shown squared because the problem states that the proportion is to the square of the diameter. In setting up the proportion, the resistance ratio in the table, $\frac{70}{x}$, is inverted to give $\frac{x}{70}$ because the problem says that an inverse proportion is involved. The diameter ratios could equally well have been inverted.

WHAT HAVE YOU LEARNED?

1. The resistance of a wire is inversely proportional to the square of the diameter of a wire. If a wire 0.21 inches in diameter has a resistance of 80 ohms, what will be the resistance of the same length of wire with a diameter of 0.25 inches?

2. The power dissipated in a resistor is proportional to the square of the voltage impressed. If a voltage of 100 volts will dissipate 240 watts in a certain resistor, how much power will be dissipated if the voltage is increased to 180 volts?

3. 400 watts of power is dissipated in a certain resistor. How much power will be dissipated in this resistor if the voltage is tripled?

4. 400 watts of power is dissipated in a certain resistor. How much power will be dissipated in this resistor if the voltage is reduced to one-third of its original value?

ANSWERS

1. 56.4 ohms

2. 778 watts . . . $\frac{100^2}{180^2}=\frac{240}{x}; \frac{10,000}{32,400}=\frac{240}{x}$; $x = 778$ watts

3. 3600 watts . . . As no actual voltage is stated, assume the voltage is 1. The tripled voltage will then be 3. Hence,

$\frac{1^2}{3^2}=\frac{400}{x}; \frac{1}{9}=\frac{400}{x}$; $x = 3600$ watts

4. 44.4 watts . . . The ratio of the original voltage to the new voltage will be 3 to 1. The ratio of the original power to the new power will be 400 to x. As it is a direct proportion, set these two ratios equal, but not until after the voltage ratio is squared.

$\frac{3^2}{1^2}=\frac{400}{x}; \frac{9}{1}=\frac{400}{x}$; $x = 44.4$ watts

NEGATIVE NUMBERS

16 MEANING OF NEGATIVE NUMBERS . . . Ordinary numbers used in counting and in most simple calculations are known as *positive numbers*. A positive number is any number greater than zero. A positive number may be indicated by placing a plus sign in front of the number, which means the number is to be added, but this sign is very commonly omitted. Thus, +6 and 6 have the same meaning; each is 6 units greater than zero.

In your work as an electronics technician you will also make use of numbers less than zero. Such numbers are called *negative numbers*. A negative number is indicated by placing a minus sign before the number. Thus, −6 means a number which is 6 units less than zero.

As a simple example to show the use of positive and negative numbers, 25 degrees above zero can be represented as +25°, and 25 degrees below zero can be represented as −25°. In a card game a score of 12 "in the hole" can be represented as −12 (that is, 12 less than zero), and a score of 20 "to the good" can be represented as +20, although the sign + need not be written.

In electronics it is convenient to consider some point of the circuit, frequently the chassis, as being at zero potential or voltage. Then points of higher voltage than the chassis are considered positive and points of lower voltage are considered negative. When we say that the grid of a certain tube is operated with a bias of −6 volts, we mean that the potential on the grid is 6 volts less than the cathode potential, the latter being considered as being zero volts. You will find many other uses of negative numbers in electronics as you progress through this course.

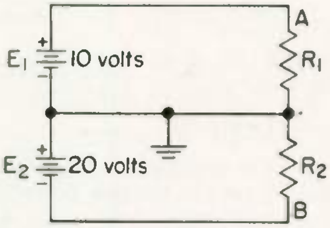

Fig. 8

WHAT HAVE YOU LEARNED?

1. 14 indicates 14 units MoRE than zero.

2. −14 indicates 14 units LESS than zero.

3. In a cold-climate area, the temperature varies in one day from 5°F to −15°F. −15 °F is the colder temperature because ITs BElow ZERO.

4. In Fig. 8 is shown a d-c circuit which uses two batteries, E_1 and E_2. The common lead between the two loops is at ground potential. The voltage at point *A* is (a) 10 volts. The voltage at point *B* is (b) −20 volts. Consider ground as being at zero potential.

ANSWERS

1. Greater . . . 14 is a positive number. 2. Less

3. −15°F is the colder temperature because it is 15° *below* zero.

4. (a) +10; (b) −20 . . . The negative pole of E_1 is connected to the grounded line. Because the voltage of E_1 is 10 volts, point *A*, connected to the positive pole of E_1, will be 10 volts above ground.

The positive pole of E_2 is connected to ground. Point *B* connects to the negative pole of E_2, which is 20 volts below ground, or −20 volts. Therefore, the voltage at *B* is −20 volts.

17 ADDING POSITIVE AND NEGATIVE NUMBERS

. . . While the use of + or − signs in front of numbers provides an easy shorthand method for saying "above zero" or "below zero," the real value in the use of these signs is that they make practical calculations easier. Two rules are used for adding positive and negative quantities:

RULE 1 . . . *To add two or more numbers which have the same sign, find their sum by ordinary arithmetic and prefix this sum with the common sign.*

RULE 2 . . . *To add a positive number to a negative number, find their difference by ordinary arithmetic and then prefix this difference with the sign of the number that has the greater value when the signs are ignored.*

EXAMPLE . . . The sum of −7 volts and −5 volts is ________ volts.

SOLUTION . . . Since a minus sign precedes both terms, Rule 1 will apply:

$$7 + 5 = 12$$

Because the common sign of the two numbers is minus, the answer is −12.

EXAMPLE . . . The sum of 8 volts and −14 volts is ________ volts.

SOLUTION . . . Since a positive number and a negative number are involved, Rule 2 will apply.

$$14 - 8 = 6$$

The number with the greater value when the sign is ignored, −14, is negative, and therefore the answer is −6 volts.

WHAT HAVE YOU LEARNED?

1. 7 + 2 = 9
2. −6 −8 = −14
3. −9 + 2 = −7
4. 24 −91 = −67
5. (a) The sum of 91 volts and −24 volts is 67 volts.
   (b) The sum of 91 volts and 24 volts is 115 volts.
6. (a) The sum of −10 amp and +14 amp is 4 amperes.
   (b) The sum of +14 amp and −10 amp is 4 amperes.
   (c) The sum of −14 amp and −10 amp is −24 amperes.

7. The sum of +21 decibels and −21 decibels is ___0___ decibels.

8. The sum of an inductive reactance of 0 ohms and a capacitive reactance of −5 ohms is ___−5___ ohms.

9. If a −12-amp current is added to another −12-amp current, the result is a ___−24___-ampere current.

10. $8 + 4 - 3 - 6 + 7 - 2 =$ ___8___

11. $4 - 9 - 7 + 3 - 5 - 6 =$ ___−20___

12. $-5 - 7 + 6 - 3 =$ ___−9___

ANSWERS

1. 9 2. −14 . . . −6 and −8 are to be added.
3. −7 . . . Use Rule 2 to add −9 and +2.
4. −67 5. (a) 67; (b) 115 6. (a) 4; (b) 4; (c) −24 7. 0 8. −5
9. −24 . . . The negative sign preceding the current value means that current flow is opposite to the direction assumed to be positive.
10. +8 . . . Add term by term. $8 + 4 = 12$, giving $12 - 3 - 6 + 7 - 2$. Then −3 added to +12 equals +9, giving

$$9 - 6 + 7 - 2 =$$
$$3 + 7 - 2 =$$
$$10 - 2 = 8$$

11. − 20 12. − 9

USING PROPORTIONS TO SOLVE EQUATIONS

18 HOW IT IS DONE . . . Formulas in electronics are very often not given in a form that will allow us to directly find what we want. For example if you are given the formula $E = \frac{Q}{C}$, you can easily find E if you know the values of Q and C. But suppose that it is Q that you want to find and you already know the values of E and C. By using proportion, this is nearly as easy as finding E. A few examples will show you how.

EXAMPLE . . . The voltage E across a capacitor is found by the formula

$$E = \frac{Q}{C}$$

where Q is the quantity of electricity stored in coulombs and C is the capacity in farads. What is the capacity if 100 volts across a capacitor will store 0.02 coulombs of electricity in the capacitor?

Solution . . . Substituting the given values in the formula, we have

$$100 = \frac{0.02}{C}$$

In accordance with the upper half of page 14, this can be written as a proportion as follows:

$$\frac{100}{1} = \frac{0.02}{C}$$

Now find the value of C as you would work any other proportion.

$$C = \frac{0.02 \times 1}{100} = \frac{0.02}{100} = 0.0002 \text{ farad, } \textit{ans.}$$

WHAT HAVE YOU LEARNED?

1. Using the formula in the last example, find the value of Q if E = 500 volts and C = 0.004 farads. 2

2. The time constant of an inductance and resistance in series is given by the formula $t = \frac{L}{R}$, where t is the time in seconds, L is inductance in henrys, and R is the resistance in ohms. What value of R should you use with an inductance of 5 henrys in order to obtain a time constant of 0.4 second? [illegible] 12.5 Ω

3. Using the formula of Problem 2 above, if R is 100 ohms, what value should L be for a time constant of 0.2 second?

.2 : 1 = X : 100 20 HENRYS

4. The cut-off point of a tube E_c in volts is given by the formula $E_c = \frac{E_p}{\mu}$, where E_p is the plate voltage, and μ is the amplification factor. If μ is 100, what plate voltage is needed so that the cut-off point will be 5 volts? 500 V

ANSWERS

1. 2 coulombs . . . $E = \frac{Q}{C}$; $500 = \frac{Q}{0.004}$. Writing this as a proportion $\frac{500}{1} = \frac{Q}{0.004}$; $Q = \frac{500 \times 0.004}{1} = 2$ coulombs

2. 12.5 ohms . . . $t = \frac{L}{R}$; $0.4 = \frac{5}{R}$. Writing this as a proportion, $\frac{0.4}{1} = \frac{5}{R}$; $R = \frac{5 \times 1}{0.4} = 12.5$ ohms

3. 20 henrys 4. 500 volts

19 MORE EXAMPLES USING PROPORTION IN EQUATIONS . . .

Example . . . Given the equation $A = \frac{KH}{MC}$, find the value of K if $H = 8$, $M = 12$, $A = 4$, and $C = 6$.

Solution . . . Inserting the given values

$$A = \frac{KH}{MC}\ ;\ 4 = \frac{8 \times K}{12 \times 6}$$

Writing as a proportion

$$\frac{4}{1} = \frac{8 \times K}{12 \times 6}$$

To find K in this proportion (or any similar one) first find the cross products. Now take the cross product in which all the terms are known, and divide it by the product of the known terms in the other cross product. This is a slight extension to the Rule on page 15 for solving a proportion.

$$4 \times 12 \times 6 = 1 \times 8 \times K$$

$$K = \frac{\cancel{4} \times \overset{6}{\cancel{12}} \times 6}{1 \times \underset{2}{\cancel{8}}} = 36, \textit{ ans.}$$

Example . . . At what frequency will an inductance of 5 henrys have a reactance of 1000 ohms? The formula to use is $X_L = 2\pi fL$, where $2\pi = 6.28$, X_L is the reactance in ohms, f is the frequency in cycles per second, and L is the inductance in henrys.

Solution . . . Substituting in the formula

$$X_L = 2\pi fL$$
$$1000 = 6.28 \times f \times 5$$

Writing as a proportion, $\frac{1000}{1} = \frac{6.28 \times f \times 5}{1}$

Solving, $1000 \times 1 = 1 \times 6.28 \times f \times 5$

$$f = \frac{\overset{200}{\cancel{1000}} \times 1}{1 \times 6.28 \times \cancel{5}}$$

$$= \frac{200}{6.28} = 31.8 \text{ cps, } \textit{ans.}$$

WHAT HAVE YOU LEARNED?

1. Given the formula $Q = \frac{0.4\,Aw}{mpH}$, find A if $w = 12$, $m = 9$, $p = 15$, $H = 10$, and $Q = 20$. ~~A = 450~~

.4H

5625

$\frac{.4 A 12}{13500} = \frac{20}{x}$

A =

3700

.12

2,250

2. Using the formula of Problem 1, find H if $Q = 200$, $A = 3$, $w = 12$, $m = 9$, and $p = 15$. .000533

3. Given the formula $X_c = \frac{1}{2\pi fC}$, find C if $X_c = 500$. and $f = 2000$. .000000159

4. Given the formula $W = \frac{E^2C}{2}$, find C if $W = 4$ and $E = 30$. .00889

5. Using the formula of Problem 4, find E if $W = 4$ and $C = 0.08$. (*Hint:* First find E^2, and remember that E is the square root of E^2.) 10

6. Given the formula $P = I^2R$, where P is power in watts, I is current in amperes, and R is the resistance in ohms, find the current in *milliamperes* if $P = 5$ watts, and $R = 400$ ohms. 112 ma.

7. Given the formula $M = \sqrt{L_1L_2}$, find L_1 if $M = 40$ and $L_2 = 16$. (*Hint:* Rewrite $\sqrt{L_1L_2}$ as $\sqrt{L_1} \times \sqrt{L_2}$, find the value of $\sqrt{L_1}$, and then square to get L_1. 100

8. Given the formula $f = \frac{1}{2\pi\sqrt{LC}}$, find the value of C if $f = 6$ and $L = 25$. .0000282

ANSWERS

1. 5625 . . . $Q = \frac{0.4\,Aw}{mpH}$; $20 = \frac{0.4 \times A \times 12}{9 \times 15 \times 10}$

$$\frac{20}{1} = \frac{0.4 \times A \times 12}{9 \times 15 \times 10}; \quad 20 \times 9 \times 15 \times 10 = 1 \times 0.4 \times A \times 12$$

$$A = \frac{9 \times 15 \times 10 \times 20}{0.4 \times 12} = 5625$$

2. 0.000533 . . . $\frac{200}{1} = \frac{0.4 \times 3 \times 12}{9 \times 15 \times H}$

$$H = \frac{1 \times 0.4 \times 3 \times 12}{200 \times 9 \times 15} = 0.000533$$

3. 0.000000159 . . . $\frac{500}{1} = \frac{1}{6.28 \times 2000 \times C}$

$$C = \frac{1 \times 1}{500 \times 6.28 \times 2000} = 0.000000159$$

4. 0.00889 . . . $\frac{4}{1} = \frac{(30)^2 \times C}{2}$; $C = \frac{4 \times 2}{1 \times (30)^2} = \frac{8}{900} = 0.00889$

5. 10 . . . $\frac{4}{1} = \frac{E^2 \times 0.08}{2}$; $E^2 = \frac{2 \times 4}{1 \times 0.08} = 100$; $E = \sqrt{100} = 10$

6. 112 ma . . . $5 = I^2 \times 400$; $\frac{5}{1} = \frac{I^2 \times 400}{1}$; $I^2 = \frac{5 \times 1}{1 \times 400} = 0.0125$ amp;

$$I = \sqrt{0.0125} = 0.112 \text{ amp} = 112 \text{ ma}$$

7. 100 . . . $40 = \sqrt{L_1} \times \sqrt{16}$; $\frac{40}{1} = \frac{\sqrt{L_1} \times 4}{1}$; $\sqrt{L_1} = \frac{40 \times 1}{1 \times 4} = 10$; $L_1 = 10^2 = 100$

8. 0.0000282 . . . $f = \frac{1}{6.28 \times \sqrt{L} \times \sqrt{C}}$; $6 = \frac{1}{6.28 \times \sqrt{25} \times \sqrt{C}}$

$$6 = \frac{1}{6.28 \times 5 \times \sqrt{C}}; \sqrt{C} = \frac{1 \times 1}{6 \times 6.28 \times 5} = 0.00531$$

$$C = (0.00531)^2 = 0.0000282$$

LESSON 2102-2

ROOTS, PROPORTION AND NEGATIVE NUMBERS

EXAMINATION

Circle the number of the correct answer for each question that follows. When you are finished, transfer the answers to the answer sheet by putting X's in the proper squares. When the graded answer sheet is returned to you, correct in this book any questions you may have missed. By doing so, you will have a record of the correct answers to all questions for review purposes.

1. What is the most common mistake made in extracting square root?
   (1) Getting the decimal point in the wrong place.
   C [✓ (2)] Failure to first of all separate the number into periods of two digits each, starting at the decimal point and working out from there in each direction.
   (3) Confusing extracting the square root with squaring a number.
   (4) Forgetting to double the partial answer in obtaining the trial divisor.

2. If the square root of 49 is 7, what is the square root of 4.9? (Don't forget to square your answer to see if it equals 4.9 as a check.)
   C (1) 0.07 (2) 0.273 (3) 0.7
   (4) 1.85 [✓ (5)] 2.21 (6) 2.73
   (7) 3.02 (8) None of the above

3. Find the square root of 2,730,000,000 (to 3 significant figures).
   (1) 1650 [✓ (2)] 52,200 (3) 16,500
   C (4) 16,800 (5) 52,800 (6) 165,000
   (7) None of the above

4. The formula for the energy stored in a capacitor is $W = \frac{1}{2}E^2C$, where W is the energy stored in the capacitor in joules; E is the voltage across the capacitor in volts; and C is the capacitance in farads. If the voltage across a certain capacitor is 100 volts and the capacitance is 0.0002 farad, how much energy is stored? C

(1) 0.5 joule [✓ (2) 1.0 joule] (3) 2 joules
(4) 5 joules (5) 10 joules (6) 50 joules
(7) None of the above

NOTE: Many of the following problems involve several steps. Even though you work the problems correctly, your third significant figure may frequently vary slightly from the choice we intend as the correct answer. This is because different practices in rounding off in the intermediate steps will give slightly different results. If you, for example, obtain an answer of 4.17 and one of our choices is 4.19, this should be taken as the answer, assuming, of course, you have not made a mistake. However, the variation should not be more than 2 or 3 in the third significant figure. If you obtain 4.17 and our nearest choice is 4.10, you should recheck your work.

5. Given the formula $H = \frac{\mu}{\sqrt{NQ}}$, find the value of H if μ is 12, N is 125 and Q is 32. C

(1) 0.0189 (2) 0.03 [✓ (3) 0.190]
(4) 0.3 (5) 0.811 (6) 0.818
(7) 1.92 (8) 3.0

6. In the equation $f = \frac{1}{2\pi\sqrt{LC}}$, if L is equal to 3.1 and C is equal to 0.022, what is the value of f?

(1) 0.0510 (2) 0.0902 (3) 0.193
[✓ (4) 0.610] (5) 0.902 (6) 61.0
(7) 193 (8) None of the above

7. A square is 23.5 inches on each side. What is the distance in feet between diagonally opposite corners? C

(1) 1.96 ft (2) 2.53 ft [✓ (3) 2.77 ft]
(4) 30.3 ft (5) 33.2 ft (6) 39.2 ft
(7) None of the above

8. Every problem you work in electronics must be checked and double checked. In particular, you should C

[✓ (1) make all of the checks below.]
(2) check decimal point location by checking over calculations, and by considering whether or not your answer seems reasonable.
(3) check carefully to make sure that your values are in the right units and that any necessary conversions are made. For example, check your work on Problem 7 above once more to see if you noticed that both feet and inches are involved, and

that you made the necessary conversion.
(4) check your work for mathematical errors.

9. If you obtain an answer that is in amperes, and you want to change your answer to milliamperes, you should
C (1) multiply the answer in amperes by 100.
(2) divide the answer in amperes by 100.
[✓ (3)] multiply the answer in amperes by 1000.
(4) divide the answer in amperes by 1000.

10. A resistor is marked 2800 ohms and is rated at 100 watts. When dissipating rated wattage, what is the current through the resistor? The formula to use is $I = \frac{P}{\sqrt{R}}$, where I is in amperes, P is in watts, and R is in ohms.
C
(1) 0.189 milliamperes
(2) 28 milliamperes
(3) 189 milliamperes
(4) 528 milliamperes
(5) 5.28 amperes
(6) 28 amperes
[✓ (7)] None of the above

11. With reference to ratios, which of the following statements is *not* true?
(1) The ratio $\frac{9}{27}$ can be written 1 : 3.
C [✓ (2)] By the statement "the ratio of A to B", we mean "$\frac{B}{A}$"
(3) Ratios must be made between quantities measured in the same unit or related units.
(4) The ratio 0.25 to 1 can be written as $\frac{1}{4}$.

12. With reference to ratios, which one of the following statements is correct?
(1) The ratio of 2 volts to 14 volts is 7:1.
C (2) The ratio of 4 volts to 3 ohms is 4:3.
(3) The ratio of 4 amperes to 8 milliamperes is 1:2.
[✓ (4)] The ratio of 5 millivolts to 20 millivolts is 1:4.

13. The ratio of 200 yards to 300 feet can be written
C [✓ (1)] 2 : 1
(2) 1 : 2
(3) 2 : 3
(4) 3 : 2

14. The collector bias on a transistor is 30 volts and the base bias is 6 volts. The ratio of base bias to collector bias is
C (1) 5 : 1
[✓ (2)] 1 : 5
(3) neither

15. Having worked out the value of x in a proportion, you should check your answer by seeing if

C [✓ (1)] the cross products are equal.
(2) the product of the numerators is equal to the product of the denominators.
(3) one cross product divided by the other cross product gives the value of x.
(4) the product of the two cross products is equal to x.

16. What is the value of x in the proportion $\frac{0.032}{9.6} = \frac{x}{0.48}$? Check your answer in accordance with Question 15, paying particular attention to the decimal point position.

C [✓ (1)] 0.0016 (4) 0.144 (7) 1.6
(2) 0.0144 (5) 0.16 (8) None of the above
~~(3) 0.016~~ (6) 1.44

17. A certain parallel circuit contains two branches. The current through each branch is inversely proportional to the resistance of the branch. The resistance of branch 1 is 540 ohms, and the current flowing through branch 1 is 0.17 amp. The current through branch 2 is 0.085 amp. What is the resistance of branch 2? To work this problem, first make a table. Then note whether the proportion is direct or inverse, and work accordingly.

C
(1) 36.5 ohms (2) 108 ohms ~~(3) 270 ohms~~
(4) 365 ohms C [✓ (5)] 1080 ohms (6) 2700 ohms
(7) None of the above

18. The resistance of a wire is inversely proportional to its cross-sectional area. If the cross-sectional area of a certain wire is 125 circular mils and the resistance is 42 ohms, what is the resistance of another wire of the same length with a cross-sectional area of 30 circular mils? Don't forget to make a table first.

(1) 8.92 ohms ~~(2) 10.1 ohms~~ (3) 17.5 ohms
C [✓ (4)] 89.2 ohms (5) 101 ohms (6) 175 ohms
(7) None of the above

19. If the current in a transformer primary is constant, the current output from the secondary is inversely proportional to the number of turns. If the secondary current output is 160 ma when there are 400 turns on the secondary, what would be the secondary current output if there were only 100 turns on the secondary?

C
(1) 0.120 ma (3) 0.640 ma (5) 213 ma
(2) 0.213 ma (4) 120 ma [✓ (6)] 640 ma

20. If the current in a transformer primary is constant, the current output from the secondary is inversely proportional to the number of turns. If the current output is 160 ma when there are 400 turns on the secondary, what will be the secondary current if you *remove* 100 turns from the secondary?

C
(1) 0.120 ma
(2) 0.213 ma
(3) 0.640 ma
(4) 120 ma
[✓ (5) 213 ma]
(6) 640 ma
(7) None of the above

21. If a 5 horsepower pump will empty a swimming pool in 8.5 hours, what size pump is needed to be able to empty the pool in 3 hours? (Check your answer to see if it seems reasonable.)

C✓
(1) 1.41 horsepower
(2) 1.76 horsepower
(3) 5.1 horsepower
[✓ (4) 14.2 horsepower]
(5) 17.6 horsepower
(6) 51 horsepower

22. The resistance of wire is proportional to its length. If 1350 feet of wire has a resistance of 2.5 ohms, what is the resistance of 800 feet of the same wire?

C
(1) 0.148 ohm
(2) 1.37 ohms
[✓ (3) 1.48 ohms]
(4) 4.22 ohms
(5) 4.32 ohms
(6) 14.7 ohms

23. An a-c generator which must run at 3600 RPM (revolutions per minute) is to be belt driven by a motor running at 1400 RPM. The motor pulley is 4 inches in diameter. What diameter pulley should you install on the generator shaft so that the generator will run at the right speed? (Pulley diameter is inversely proportional to speed.)

C✓
(1) 1.26 inches
[✓ (2) 1.56 inches]
(3) 4 inches
(4) 10.3 inches
(5) 12.6 inches
(6) 15.6 inches

24. The ratio of the secondary current in a transformer to the primary current is equal to the ratio of the number of turns on the primary to the number of turns on the secondary. By "ratio of secondary current to primary current" is meant

C
[✓ (1) $\frac{\text{secondary current}}{\text{primary current}}$]
(2) $\frac{\text{primary current}}{\text{secondary current}}$

C✓
25. Refer to Question 24. The "ratio of number of turns on the primary to the number of turns on the secondary" means

[✓ (1)] $\dfrac{\text{primary turns}}{\text{secondary turns}}$ (2) $\dfrac{\text{secondary turns}}{\text{primary turns}}$

26. Refer to Questions 24 and 25. Remembering that a proportion is a statement that two ratios are equal, we know that the ratio of Question 24 must equal the ratio of Question 25. Therefore the proportion can be written

C

(1) $\dfrac{\text{secondary current}}{\text{primary current}} = \dfrac{\text{secondary turns}}{\text{primary turns}}$

[✓ (2)] $\dfrac{\text{secondary current}}{\text{primary current}} = \dfrac{\text{primary turns}}{\text{secondary turns}}$

27. Referring to Questions 24, 25, and 26, suppose that there are 600 turns on the secondary and 150 turns on the primary, and the primary current is 10 amperes. Then from Question 26 the proper proportion to use to find the secondary current is

C

[✓ (1)] $\dfrac{x}{10} = \dfrac{150}{600}$ (3) $\dfrac{x}{150} = \dfrac{10}{600}$

(2) $\dfrac{x}{10} = \dfrac{600}{150}$ (4) $\dfrac{x}{150} = \dfrac{600}{10}$

28. Referring to Question 27, what is the value of the secondary current?

C

[✓ (1)] 2.5 amps (3) 25 amps

(2) 4 amps (4) 40 amps

(5) None of the above

29. The reactance of an inductor is directly proportional to the frequency. If the reactance of a certain inductor is 300 ohms at 4500 cycles, what is the correct proportion for finding the reactance at 5000 cps? Be sure to first make a table.

C

[✓ (1)] $\dfrac{300}{X} = \dfrac{4500}{5000}$ (3) $\dfrac{4500}{X} = \dfrac{5000}{300}$

(2) $\dfrac{300}{4500} = \dfrac{X}{5000}$ (4) $\dfrac{4500}{300} = \dfrac{5000}{X}$

(5) None of the above

30. Refer to Question 29. What is the reactance at 5000 cps?

C

(1) 270 ohms (3) 3330 ohms

(2) 311 ohms [✓ (4)] None of the above

333.33
4500) 1500 0.00

155500
1244
311 x 4500 = 1399500

31. Given the formula $F = \frac{W}{EI}$, find I if $F = 0.667$, $W = 160$, and $E = 30$.

C

(1) 0.000139 [✓ (5) 8]
(2) 0.125 (6) 3200
(3) 0.281 (7) 7200
(4) 3.56 (8) None of the above

32. The formula for magnetomotive force (F) in gilberts is $F = 1.26NI$, where N is the number of turns and I is the current in amperes. C If the current is 4 amperes, how many turns are required to produce a force of 1000 gilberts?

[✓ (1) 198 turns] (3) 3200 turns
(2) 312 turns (4) 5000 turns
(5) None of the above

$1000 = 1.26 N \times 4$

$250 = 1.26 N$

$= N$

$$\begin{array}{r} 198.4 \\ 126\overline{)25000.} \\ \underline{126} \\ 1240 \\ \underline{1134} \\ 1060 \\ \underline{1008} \\ 520 \\ 4 \end{array}$$

$.667 = \frac{160}{30I}$

$$30I = \begin{array}{r} 240. \\ .667\overline{)160000.} \\ \underline{1334} \\ 2660 \\ 2668 \end{array}$$


CLEVELAND INSTITUTE OF ELECTRONICS

CLEVELAND INSTITUTE OF ELECTRONICS / CLEVELAND, OHIO

electronics

CLEVELAND INSTITUTE OF ELECTRONICS / CLEVELAND, OHIO

Inductance and Capacitance

2511-1

An AUTO-PROGRAMMED Lesson

ABOUT THE AUTHORS

Morris Slurzberg and William Osterheld have over thirty years of experience in the field of electronics. Their careers are almost parallel . . . graduation from the Newark College of Engineering in Electrical Engineering, Masters degrees in Vocational Education from New York University, and teaching electricity, radio, television, and electronics, at the Henry Snyder and William L. Dickinson High Schools, respectively, in Jersey City (N. J.). Both have acted as consultants to the Armed Forces and to private firms engaged in production of electronics gear. Slurzberg and Osterheld have both worked in the electronics industry for several years.

They are well known as the coauthors of *Essentials of Electricity-Electronics* (3rd edition), published as *Essentials of Electricity for Radio and Television* (2nd edition), and *Electrical Essentials of Radio* (1st edition)—also *Essentials of Radio—Electronics* (2nd edition) originally published as *Essentials of Radio* —also *Essentials of Television*.

Mr. Slurzberg was honored by the Newark College of Engineering with an appointment to its Hall of Fame for the work he has done in his professional and community life. He has also been instrumental in the establishment of science fairs in northern New Jersey.

Lester Slurzberg is a graduate of Newark College of Engineering with a B. S. in Electrical Engineering and is a member of the IEEE. He is presently employed as an application engineer for the Theta Instrument Corporation, where he is also editor-in-charge of preparing application notes.

This text, *Inductance and Capacitance*, was technically edited by the Staff of Cleveland Institute of Electronics. Our purpose in this is to ensure that the text is easily understandable as well as accurate and up-to-date.

This is an AUTO-PROGRAMMED* Lesson exclusive with the Cleveland Institute of Electronics. It is your assurance of the finest in technical education and training.

*Registered Trademark

Accredited by the Accrediting Commission of the National Home Study Council

The Accrediting Commission has been approved by the U.S. Office of Education as a "nationally recognized accrediting agency"

CLEVELAND INSTITUTE OF ELECTRONICS

Inductance and Capacitance

By MORRIS and LESTER SLURZBERG
and WILLIAM OSTERHELD

2511-1

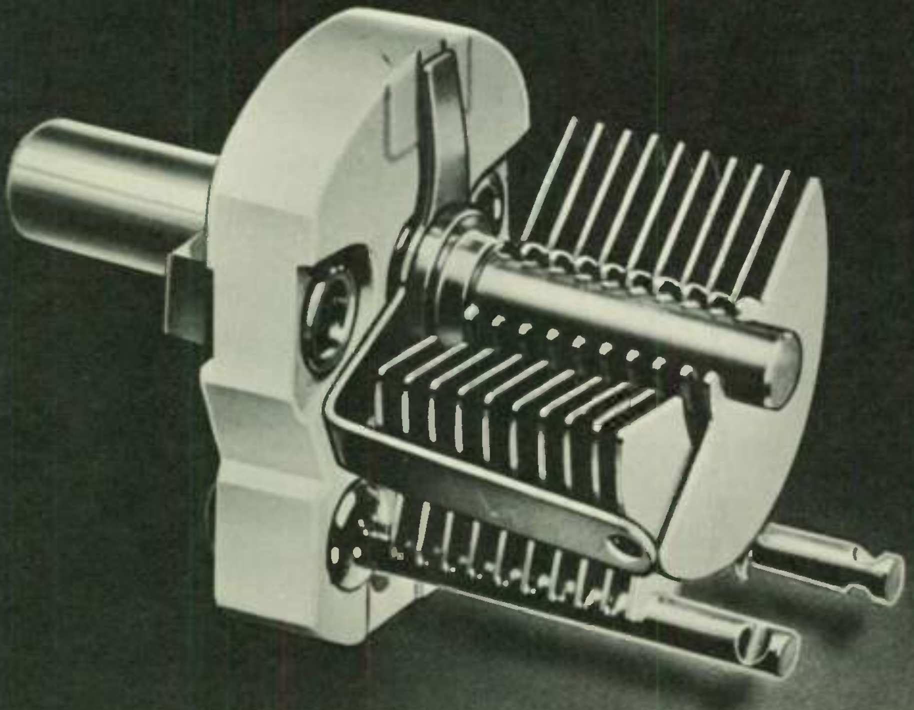

In this lesson you will learn...

FRONTISPIECE: *A variable capacitor with air dielectric and ceramic insulation.*
Photo: Courtesy, E. F. Johnson Company.

THIRD EDITION/Second Printing/November, 1967.

A chat with your instructor

In electronics a number of different circuit components are connected together to form a properly operating circuit. The current and voltage distribution within the circuit is determined by three things: resistance, inductance, and capacitance.

You have already studied the uses of resistance in d-c circuits. The uses of inductance and capacitance are the subject of this lesson.

Because inductance is based upon the characteristics of magnetic fields, you will study magnetism and magnetic fields before progressing to inductance. Capacitance is based upon the characteristics of electric or electrostatic fields, and so you will first study electric fields and then capacitance.

There is a broad range of applications, sizes, and types of both inductors and capacitors. Therefore, you will briefly study the construction of some of the most commonly used types and be able to note their relative merits for different applications.

The principles you will learn from this lesson are used in practically every electronic circuit. If you learn them well, you will find any electronic circuit easier to understand. Because of this importance, be sure to write to me about anything you don't fully understand.

Inductance and Capacitance

MAGNETISM AND MAGNETIC CIRCUITS

You have already learned about electric charges and the relationship between voltage, current, and resistance in an electric circuit. In this

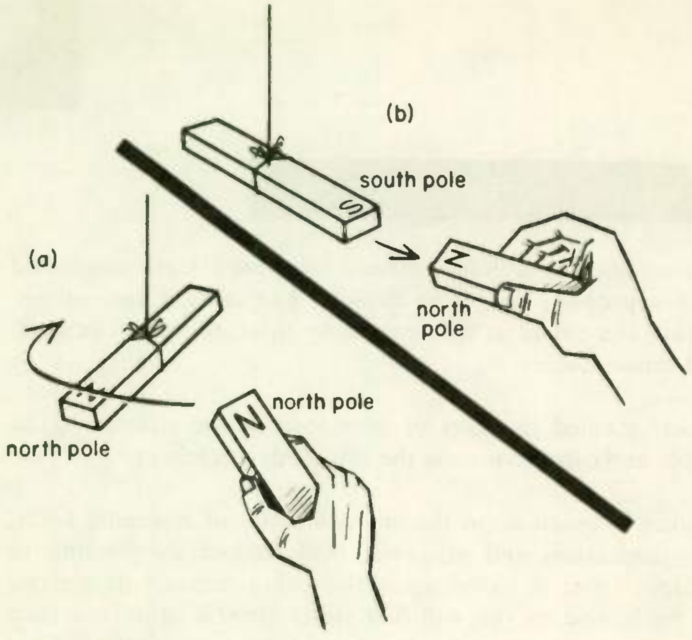

Fig. 1 Effect of magnetic poles.

section you will learn that a magnetic circuit has properties that are exactly parallel to those of an electric circuit.

1 PROPERTIES OF MAGNETS...If a straight magnet (called a bar magnet) is suspended and is free to turn, it will swing from side to side and come to rest in a north-south position. The end pointing toward the north is called the north-seeking pole, or simply the *north pole*, and the opposite end is called the *south pole*.

Figure 1(a) shows that two north poles brought close together will repel each other, and Fig. 1(b) shows that a north and south pole will attract each other. A basic law of magnets is that *like poles repel* and *unlike poles attract*. Compare this with the law relating positive and negative charges. You will remember that like charges repel and unlike charges attract.

Magnets also attract certain materials that are not magnets. Such materials, of which iron is by far the best known and most important example, are called *magnetic materials*. Nickel and cobalt are also magnetic materials, but the attraction of a magnet for these materials is much less than for iron.

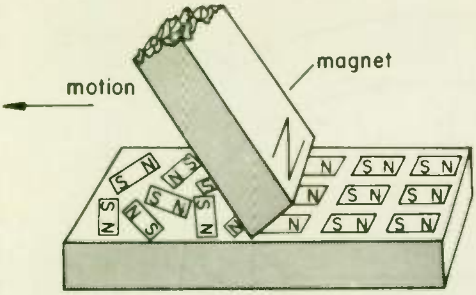

bar being magnetized

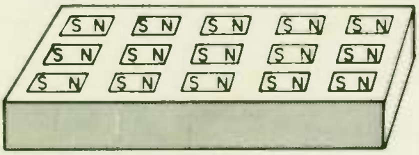

bar magnetized

Fig. 2 **Molecular magnets in a steel bar are aligned by stroking the bar with a magnet.**

The theory of *molecular alignment* explains why some materials can be magnetized. The molecules of all magnetic materials are tiny magnets. When a piece of magnetic material, say, a bar of iron, is unmagnetized, these molecular magnets face in random directions. When that is the case, the magnetic field of each is neutralized by the fields of adjacent molecular magnets.

However, if by some means the molecular magnets are so aligned that all of the north poles face in one direction and all the south poles face in the other direction, the entire bar will be one large magnet. A steel bar can be magnetized by stroking it several times in the same direction with a magnet, as shown in Fig. 2. The field of the magnet serves to align the molecular magnets in the bar.

The alignment of the molecular magnets can sometimes be destroyed by mechanical shock or excessive heat, which explains why some permanent magnets lose their magnetism. So when you are handling an instrument or piece of equipment that contains a permanent magnet, you should take care not to drop it or subject it to unnecessary shock or heat that might weaken the magnet.

2 MAGNETIC FIELDS . . . A piece of iron being attracted to a magnet does not move in a straight line; instead, it moves in a curved path,

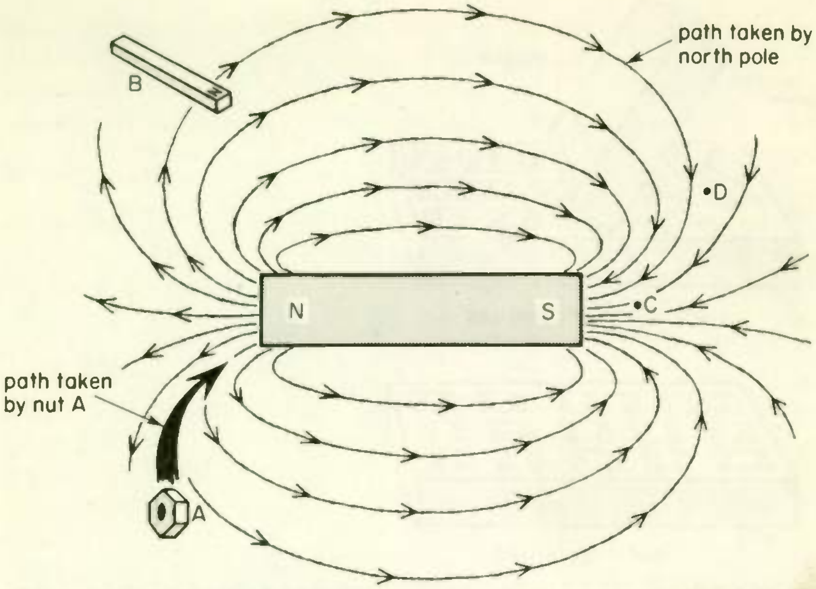

Fig. 3 **Lines of force are drawn around a magnet to show direction in which the magnetic force acts. The space occupied by the lines is called the magnetic field.**

such as the path taken by nut *A* in Fig. 3. We draw lines, called *lines of force*, between the north and south poles of a magnet to show the direction in which magnetic materials move, that is, the direction in which the magnetic force acts.

In Fig. 3 the lines with arrows show the direction that a free-to-move north pole will take if placed within the magnetic field. For example, the north pole of magnet *B* in Fig. 3 moves from the north pole of the main magnet to the south pole by following the path shown; it is repelled by the north pole and attracted by the south pole. The arrows always point from north pole to south pole because that is the direction in which a north pole will always move. A south pole would follow one of the paths shown, but it would, of course, move in the direction opposite to the arrows. A piece of unmagnetized iron will follow one of the lines of force, and it will move in the direction of the closest pole.

The lines of force we draw do more than indicate the direction of the magnetic action; they also indicate field strength. The closer together the lines are, the stronger the force at that point. At point *C* in Fig. 3 the lines of force are close together. Therefore, the force of attraction or repulsion at that point in the field is strong. At point *D* the lines are farther apart, showing that the field (that is, the magnetic force) is weaker there.

Each line of force is thought of as an unbroken loop that leaves the north pole, goes around to the south pole, and finally returns to the north pole through the interior of the magnet. If we replaced the magnet shown with a stronger magnet, we would draw more lines of force to indicate the greater strength.

The lines of force as a group compose what is called the *magnetic flux* or the *magnetic field*. A single line of force is called a *maxwell*. A magnet with a flux of 10,000 lines of force (10,000 maxwells) is twice as strong as a magnet with a flux of 5000 maxwells.

While the total number of lines of force emanating from a magnet indicates the general strength of a magnet, the strength varies with distance from the magnet; that is, the field strength decreases rapidly as we move away from the poles of the magnet. As we have already mentioned, this is indicated by the lines of force being farther apart in weaker areas of the field.

The force exerted by a magnet at any point in space is determined by the number of lines of force per square centimeter at that point. The strength is said to be one *gauss* if there is one line of force per square centimeter. A field strength of 8000 gausses means that there are 8000 lines of force per square centimeter, and such a field is twice as strong as a 4000-gauss field; see Fig. 4.

WHAT HAVE YOU LEARNED?

1. The north-seeking pole of a magnet is attracted toward the earth's geographic north pole. Therefore, the magnetic polarity of the earth in this region must be that of a ________ pole.

2. If the south pole of one magnet is brought near the ________ pole of another, the magnets will move apart.

3. Magnetic lines of force are also known as ________.

4. Magnetic lines of force are thought of as leaving the (a) ________ pole of a magnet and returning through the (b) ________ pole.

5. The strength of the magnetic force at some point near a magnet would be measured in *(maxwells) (gausses)*.

6. A strong magnet has more *(maxwells) (gausses)* than a weak magnet.

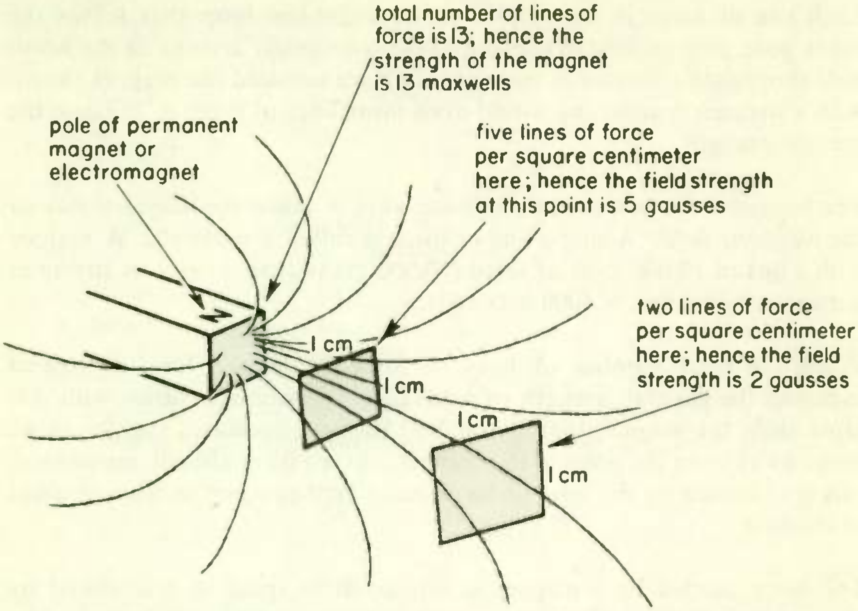

Fig. 4 **Total number of lines of force is measured in maxwells. Gausses are a measure of the number of lines of force per square centimeter, and the number will vary with distance from the pole and the position of the 1-cm square.**

7. The unit of measure of the number of lines of force per square centimeter is the ________.

ANSWERS

1. South . . . Although the pole is located north geographically, it behaves like the south pole of a magnet.
2. South 3. Maxwells 4. (a) North; (b) South
5. Gausses . . . The force exerted by the magnet at some point in space around the magnet is determined by the number of lines per square centimeter at that point, and that is measured in gausses.
6. Maxwells . . . The general strength of a magnet is determined by the total number of lines of force the magnet produces, and that is measured in maxwells. The field strength in gausses varies with distance from poles, and the field is stronger near the pole of a weak magnet than it is some distance away from the pole of a strong magnet. Hence, gausses would not be a very satisfactory answer to the question.
7. Gauss

3 ELECTROMAGNETISM . . . If a compass (which is nothing but a small bar magnet mounted free to turn) is held close to a conductor carrying a current, its needle will be deflected and will take up a position at

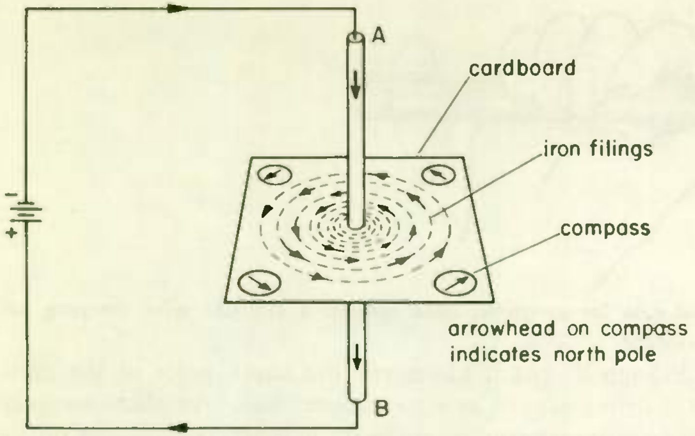

Fig. 5 Magnetic field around a straight wire carrying an electric current.

right angles to the wire, as shown in Fig. 5. The deflection of the compass shows that an electric current has a magnetic field around it. This is one of the most useful properties of a current. Electricity would be of little use to us if it were not for the magnetic and electric fields associated with it.

The shape of the flux around a current-carrying conductor is found, as shown in Fig. 5, by spreading iron filings on a card at right angles to the conductor. The filings will align themselves in paths that represent the lines of force. As the figure shows, the lines of force form circles around the conductor. They are closer together near the conductor because the field is stronger there.

The strength of the field at a specific distance from the conductor is proportional to the strength of the current. Remembering that the direction of lines of force is the direction in which a north pole tends to move, we can place the arrows on the lines of force in Fig. 5 by noting which way the north pole of the compass points. Reversing the current direction will reverse the direction of the lines of force.

Figure 6 shows you how to tell the direction of the field around a current-carrying conductor. If you grasp the wire with your left hand so that your thumb points in the direction of electron flow, your fingers will point in the direction of the lines of force.

The magnetic field around a straight wire is relatively weak. By winding the wire into a coil, such as the one in Fig. 7, the field strength is much increased. The coil becomes a magnet—called an *electromagnet*—when

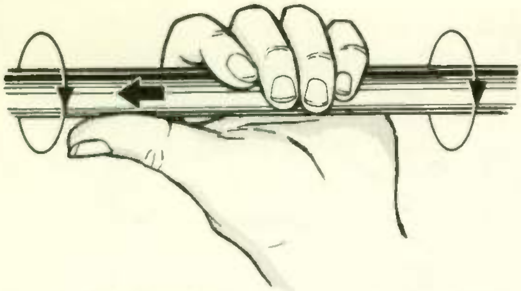

Fig. 6 Left-hand rule for magnetic field around a straight wire carrying an electric current.

current flows through it, and it has north and south poles at the ends where the field is strongest, just as a bar magnet has. An electromagnet has an important advantage over an ordinary magnet: you can cut off its magnetic field at any time by merely cutting off the current to the coil. For that reason, an electromagnet is called a *temporary magnet*, and a bar magnet is called a *permanent magnet*.

You can greatly increase the strength of an electromagnet, such as the one of Fig. 7, by placing an iron bar within it. If the bar is a soft grade of iron, most of the magnetism in the bar will disappear when the current is cut off. The small amount that remains is called *residual* magnetism. Hard steel, such as a drill bit, will retain most of its magnetism after the current is cut off, and thus it will become a permanent magnet. This shows you one way to make a permanent magnet. Special alloys are used for the strongest permanent magnets. One of the best known is Alnico, which is an alloy of *al*uminum, *n*ickel, *i*ron, and *co*balt.

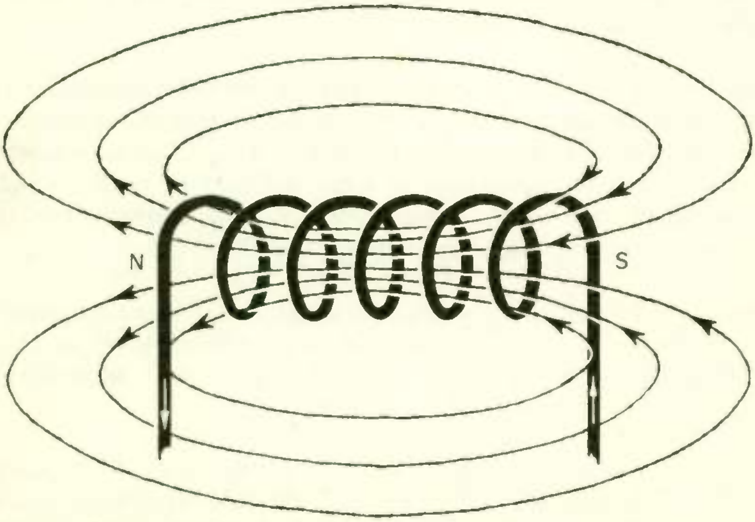

Fig. 7 Magnetic field about a coil of wire carrying a current.

WHAT HAVE YOU LEARNED?

1. In some a-c generators, magnetic fields must be continually reversed. *(Temporary) (permanent)* magnets are suitable for this purpose.

2. Meter movements require a uniform magnetic strength for long periods of time, and ____________________ magnets meet this requirement.

3. A lifting magnet consists of a magnetic material within a coil. When current flows through the coil, the material becomes magnetized. The material should be made of a (a)______________ magnetic material so that the material held will be released when the current is cut off. After current is shut off, the material still has some (b)______________ magnetism.

4. Decreasing the current in a straight wire ______________ the wire's magnetic strength.

5. The electron flow in the wire shown in Fig. 8 is in the direction of the arrow. By using arrows, show the direction of the lines of force.

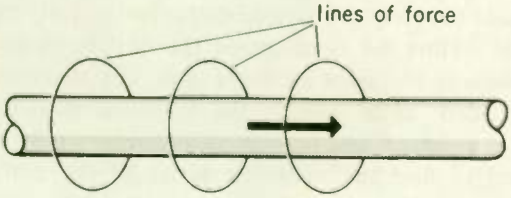

Fig. 8

6. A large d-c generator requires a strong magnetic field. For this purpose *(permanent magnets) (electromagnets) (either)* could be used.

ANSWERS

1. Temporary . . . If the magnet were permanent, you could not get the magnetic field to reverse.
2. Permanent 3. (a) Temporary; (b) residual 4. Decreases
5.

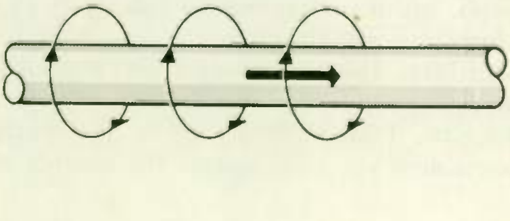

Fig. 9

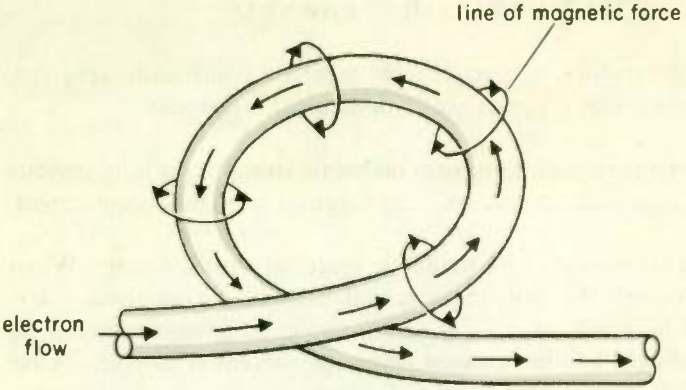

Fig. 10 When a wire carrying a current is bent into a loop, all the lines of magnetic force pass through the center of the loop in one direction and return outside the loop in the opposite direction.

6. Electromagnets . . . Electromagnets can be made to be much stronger than permanent magnets can be.

4 THE FIELD OF A COIL . . . Figure 10 shows why the magnetic field is increased when the current-carrying wire is coiled. Notice in Fig. 10 that all the lines inside the loop are in one direction and all the lines outside are in the other. Thus the field inside the coil is stronger than for a straight wire because the lines of force now act together. If we have more than one turn, as in Fig. 7, the magnetic forces set up by the various turns act together and form a still stronger field. The left-hand rule can be used to find the magnetic poles of the coil: *Hold the coil with your left hand so that your fingers point in the direction of current flow. Your thumb will then point toward the north pole*, as shown in Fig. 11.

If a compass is held *inside* the coil of Fig. 7, the north pole of the needle will point toward the north pole of the coil, in contrast to the usual rule that like poles repel. The reason for this is that the north pole, as already explained, always points in the direction of the lines of force, and, as Fig. 7 shows, that direction is from south to north *inside* a coil.

The number of turns and the current strength determine the amount of the force that sets up the magnetic field. This force is called *magnetomotive force* (mmf), and it corresponds to voltage in an electric circuit. Voltage is the force that sets up a current, and mmf is the force that sets up a magnetic field. Just how strong a field a given amount of mmf will set up depends upon how hard it is for lines of force to form in the path they must follow. Lines of force form in iron much easier than in air, so for the same mmf you may increase the number of lines of force

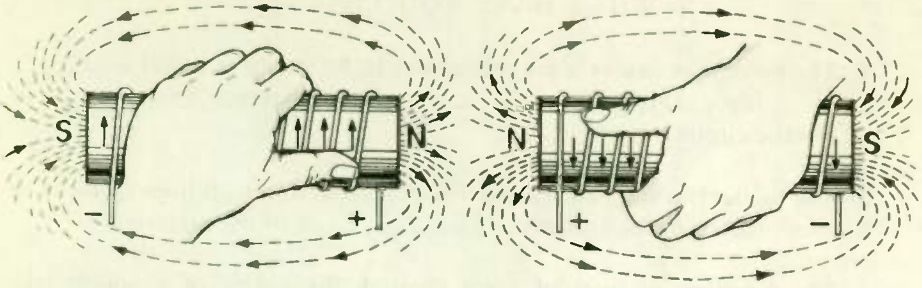

(a) (b)

Fig. 11 **Application of left-hand rule to multiple-turn coil carrying an electric current.**

of a coil several hundred times by inserting an iron core inside the coil. Compare this with an electric circuit: for a given voltage (which corresponds to mmf) the amount of current (which corresponds to lines of force) depends upon the circuit resistance.

Just as you have resistance in an electric circuit, so you have an opposition to the setting up of a magnetic field. This opposition is called *reluctance* and is represented by the symbol $\mathcal{R}$. Air has a high reluctance, so that a high mmf is required to set up any great number of lines of force. Iron has a low reluctance, so that a small mmf will set up a strong field.

The mmf of a coil is measured by the *ampere-turns* and is equal to the product of the number of turns N on the coil and the current strength I, in amperes, or $N \times I$. If 2 A (amperes) flows through a coil of 800 turns, the mmf in ampere-turns is $800 \times 2 = 1600$ At (ampere-turns).

The mmf can also be expressed in a unit called the *gilbert*. To get the mmf in gilberts, you merely multiply the ampere-turns by 1.26. Thus 1600 At is equal to $1.26 \times 1600 = 2016$ gilberts. The number of ampere-turns is multiplied by 1.26 so that the answers to magnetic circuit problems involving mmf will come out right.

Since the mmf depends upon the ampere-turns, one way to increase the mmf is to increase the current through the coil by raising the voltage across the coil. Surprisingly, increasing the number of turns won't increase the mmf unless the voltage across the coil is also increased. That is because, as the number of turns increases, the resistance also increases and the current therefore decreases. The net result is that the product $N \times I$ does not change.

WHAT HAVE YOU LEARNED?

1. The force that causes a magnetic field to be set up is called (a)________ ________ force, abbreviated (b)________. It corresponds to (c)________ in an electric circuit.

2. The higher the magnetomotive force required to set up lines of force in a certain material, the higher the ______________ of the material.

3. The direction of lines of force through the center of a coil is *(the same as) (opposite to)* the direction of lines of force outside the coil.

4. Write *does* or *does not* after each of the following factors to indicate whether it does or does not influence the direction of the lines of force of an electromagnet: (a) Ampere-turns ______________; (b) magnetic material ______________; (c) direction of current flow through the winding ______________.

5. A certain relay requires an electromagnet of at least 600 At to have sufficient magnetic pull. If a coil with 200 turns is used, the current through the coil should be at least ________ amperes.

6. The resistance of iron wire is (a) *(higher) (lower)* than the resistance of copper wire. What, then, would be the effect on the magnetic strength of a coil wound with iron wire if it were rewound with copper wire? That is, would the magnetic strength of the coil (b) *(increase)* or *(decrease)*?

7. A coil has 1000 turns and has 0.25 A flowing through it. The magnetomotive force developed by the coil is (a)________ ampere-turns, or (b)________ gilberts.

8. A voltage of 6 V (volts) is applied across a 200-turn coil with a resistance of 30 Ω (ohms). The mmf developed by the coil is (a)________ ampere-turns, or (b)________ gilberts.

ANSWERS

1. (a) Magnetomotive; (b) mmf; (c) voltage
2. Reluctance 3. Opposite to . . . Note Fig. 10.
4. (a) Does not (b) Does not (c) Does . . . The direction of lines of force generated by an electromagnet is determined entirely by the direction of current flow through the winding.
5. 3 . . . 3 A × 200 turns = 600 At
6. (a) Higher (b) Increase . . . Since the resistance of the wire would decrease, current through the wire would increase for the same applied voltage. An increase in current would cause an increase in magnetic lines of force.

7. (a) 250 (b) 315 . . . 250 × 1.26

8. (a) 40 (b) 50.4 . . . First find the current. $I = E/R = 6/30 = 0.2$ A. Ampere-turns $= I \times N = 0.2 \times 200 = 40$. $40 \times 1.26 = 50.4$.

5 THE MAGNETIC CIRCUIT . . . The easiest way to understand a magnetic circuit is to compare it with an electric circuit, as we have done in Fig. 12. An iron path is shown for the magnetic field. Notice the symbol Φ (Greek phi), which represents the total number of lines of force (maxwells) set up. Flux (Φ), magnetomotive force (mmf), and reluctance ($\mathcal{R}$) in a magnetic circuit are related in the same way as are current, voltage, and resistance in an electric circuit. In an electric circuit you divide the voltage by the resistance to get the current. In a magnetic circuit you divide magnetomotive force, in gilberts, by reluctance to get the flux value:

$$\Phi = \frac{\text{mmf (in gilberts)}}{\mathcal{R}}$$

EXAMPLE . . . Referring to Fig. 12(a), assume that 400 turns are used, the current is 0.5 A, and the reluctance of the iron core is 0.2. What is the strength of the flux?

SOLUTION . . . First find the mmf in gilberts:

$$\text{mmf} = 1.26NI = 1.26 \times 400 \times 0.5 = 252 \text{ gilberts}$$

$$\Phi = \frac{\text{mmf}}{\mathcal{R}} = \frac{252}{0.2} = 1260 \text{ maxwells, } \textit{ans.}$$

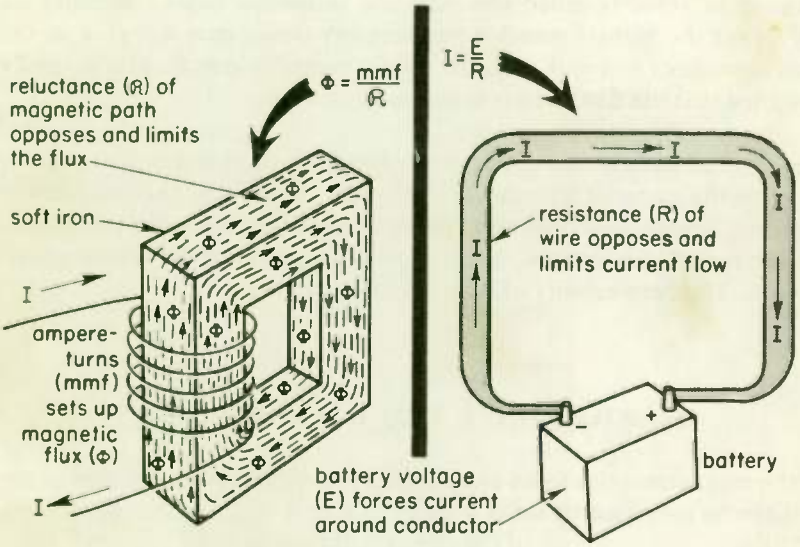

(a) Magnetic circuit (b) Electric circuit

Fig. 12 Comparison of a magnetic circuit and an electric circuit.

What determines the reluctance of the magnetic circuit? One thing already mentioned is the type of material used for the magnetic path. The reluctivity of air and the reluctivity of all other nonmagnetic materials are approximately equal. Magnetic materials have a much lower reluctivity than nonmagnetic materials. The reluctance of the magnetic path will be proportional to its length, just as the resistance of a conductor is proportional to its length. Similarly, the reluctance of the magnetic path is inversely proportional to its cross-sectional area, just as the resistance of a conductor is inversely proportional to its cross-sectional area.

Permeability, for which μ (Greek mu) is the symbol, is a term used to describe the ease with which lines of force can be established in a given substance as compared with air. The permeability of air is considered to be unity, that is, 1. If we say a certain grade of iron has a permeability of 4000, we mean that, if an air magnetic path is replaced with this iron, we will have 4000 times as many lines of force as we had in air. In other words, the reluctivity of the iron is only 1/4000 as much as that of air.

The permeability of a magnetic material is not a constant value; it decreases rapidly after a certain flux density in gausses is reached. After the number of lines of force in iron (or other magnetic material) reaches a certain density, a further increase cannot be set up easily. In other words, the circuit reluctance increases, which means that the permeability has decreased. The flux density at which the permeability starts to drop off rapidly in value is called the *magnetic saturation point*. Because we usually want the highest possible permeability (since that will give us the desired amount of flux with the least mmf), magnetic circuits are normally so designed that the flux density is below saturation.

Magnetic saturation is said to occur when almost all of the tiny molecular magnets in the material have become aligned. Since a further increase in flux density cannot align more of the elementary magnets, the permeability of the material decreases. Saturation does not occur in nonmagnetic materials. The permeability of such materials is always 1.

WHAT HAVE YOU LEARNED?

1. If the magnetomotive force of a magnet is kept constant, the flux in the circuit can be increased by using a material with a (a) ________ permeability. The (b) ______________ of the circuit will then be less.

2. Figure 13 shows a coil wound around a toroidal (doughnut-shaped)

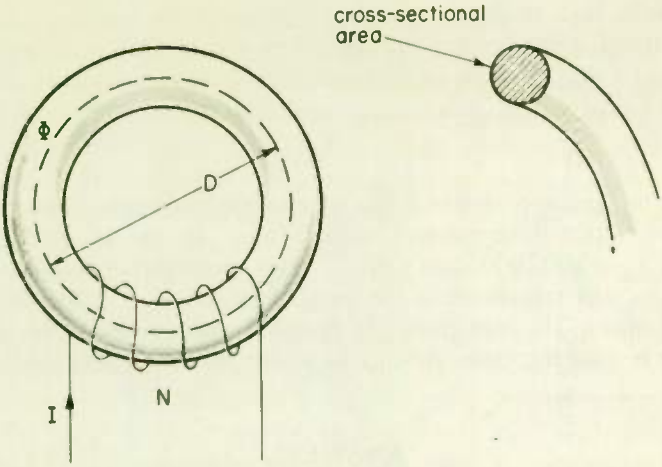

Fig. 13

core. If the diameter *D* of the core is doubled, the reluctance of the core will be (a) ____________. If the cross-sectional area of the core (one of the ends you would see if you sawed the core in half) is doubled, the reluctance of the core will be (b) ____________.

3. Figure 14 shows how a magnetic shield can be used to isolate a meter from magnetic fields. Since magnetic fields follow the path of least reluctance, the material used should have a high ______________.

4. What in the circuit of an electromagnet corresponds to a battery in an electric circuit? ______________.

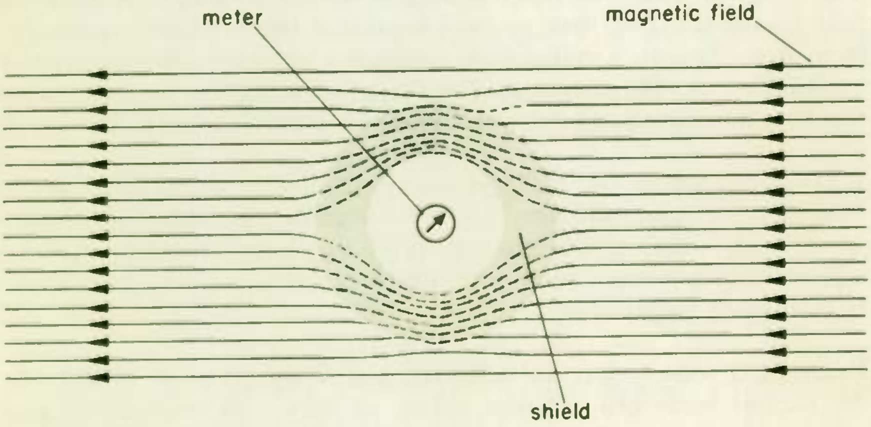

Fig. 14

5. Maxwells in a magnetic circuit correspond to (a) ____________ in an electric circuit, and they are represented by the symbol (b) ________. The property of a magnetic circuit that corresponds to resistance in an electric circuit is called (c) ________________, and it is represented by the symbol (d) ________.

6. An air magnetic path has a flux of 500,000 maxwells. When an iron path of the same dimensions is used in place of the air path, the flux increases to 80,000,000 maxwells. The permeability of the iron is (a) ________. The reluctance of the air path is (b) ________ times as great as the reluctance of the iron path. If doubling the ampere-turns when the iron path is used increases the flux to 90,000,000 maxwells, then the iron path is (c) ____________.

ANSWERS

1. (a) Higher; (b) reluctance
2. (a) Doubled . . . The length of the path is doubled and reluctance is proportional to path length. (b) Halved
3. Permeability
4. The ampere-turns . . . A battery develops voltage, and ampere-turns develop mmf.
5. (a) Amperes; (b) Φ; (c) reluctance; (d) $\mathcal{R}$
6. (a) 160 . . . 80,000,000/500,000 = 160 (b) 160
(c) Saturated . . . Provided saturation is not reached, doubling the mmf should approximately double the number of lines of force.

INDUCED CURRENTS

You have learned that current moving through a coil builds up a magnetic field around the coil. Now you will learn that this principle also works in reverse. That is, a coil moving through a magnetic field will have a current flow or voltage generated in the coil. Whenever the number of flux lines threading a coil changes, a voltage is induced in the coil.

If it were not for the fact that a changing magnetic field sets up a current flow, generators, transformers, and most of the whole field of electronics would not be possible. For that reason, it is very important that you have a good understanding of some of the effects of inducing a current in a coil by a changing magnetic field.

6 INDUCED VOLTAGE THROUGH MOTION . . . Figure 15 shows a bar magnet being brought near a loop of wire. As the magnet gets nearer, the number of flux lines threading the loop increases. If we

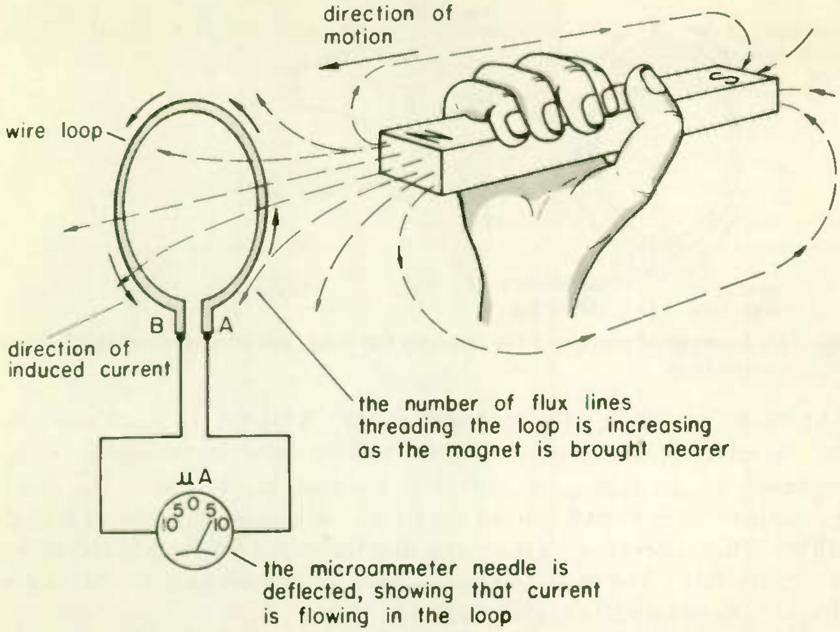

Fig. 15 Moving a magnet toward a wire loop induces a current in the loop.

watch the zero-centered microammeter (that's one with the needle centered, so that it is free to swing either way), we see that the meter needle is deflected. This shows that the changing field strength within the loop induced a current in the loop. If we now pull the magnet away from the loop, the meter needle will be deflected in the opposite direction. This shows that reversing the direction of magnet motion reversed the direction of the induced current.

We can also look at the magnet as inducing a voltage in the loop. In Fig. 16 the magnet is moving toward the now-open loop so that the flux threading the loop is increasing. Electrons in the wire are thus caused to flow from *A* to *B* through the loop. Since there is no closed circuit, the electrons pile up at end *B*, giving that end a negative charge. At the same time, electrons have left end *A*, so that that end becomes positively charged. Hence, a voltage would be read by a voltmeter connected between *B* and *A*.

If the magnet is now pulled away from the coil, the direction of electron movement in the wire reverses. End *B* then becomes positively charged, and end *A* negatively charged. If we periodically move the magnet toward and away from the loop, an alternating voltage will be induced in the loop.

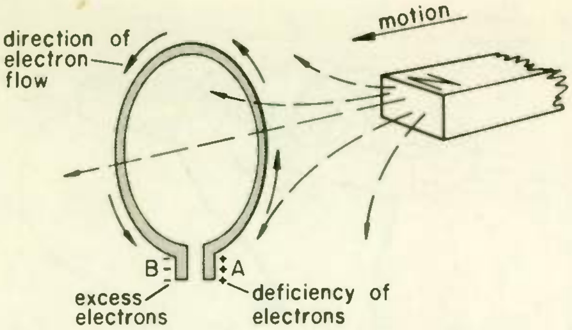

Fig. 16 **Because of electron flow through the loop, an emf is developed across the loop.**

7 FACTORS AFFECTING INDUCED VOLTAGE . . . When the amount of flux threading a loop or coil of wire is changing—either increasing or decreasing, a voltage is induced in the coil. The faster the bar magnet is moved toward the loop, the higher the induced voltage will be. That is because the magnetic flux threading the loop is increasing at a faster rate. The *induced voltage*, then, *is proportional to the rate of change of flux* threading the loop or coil.

The rate of change of flux refers to the increase or decrease per second in the number of flux lines in the field. If the number of flux lines threading the loop increases from 1000 lines to 1500 lines in one second, the flux has changed 500 lines in one second. In other words, the rate of change of flux is 500 lines per second. If the number of lines decreases from 10,000 lines to 6000 lines in 2 s (seconds), the change in flux is $10{,}000 - 6000 = 4000$ lines. The rate of change of flux is then $4000/2 = 2000$ lines per second. The induced voltage when the rate of flux change is 2000 lines per second, will be 4 times as great as when the rate of flux change is only 500 lines per second.

It makes no difference whether the magnetic field is moved and the coil is stationary or the coil is moved and the field is stationary. All that is necessary to induce a voltage in the coil is some change in the number of flux lines threading the coil.

Now let's consider another factor that determines the magnitude of the voltage induced in a coil of wire by a changing magnetic field. Figure 17 shows a coil made up of several turns of wire moving into a magnetic field. The voltage induced in each turn of wire is proportional to the rate of change of flux through that turn. Since there are several turns in series, the voltages of the individual turns add, thus producing a voltage across the entire coil that is equal to the sum of the individual voltages.

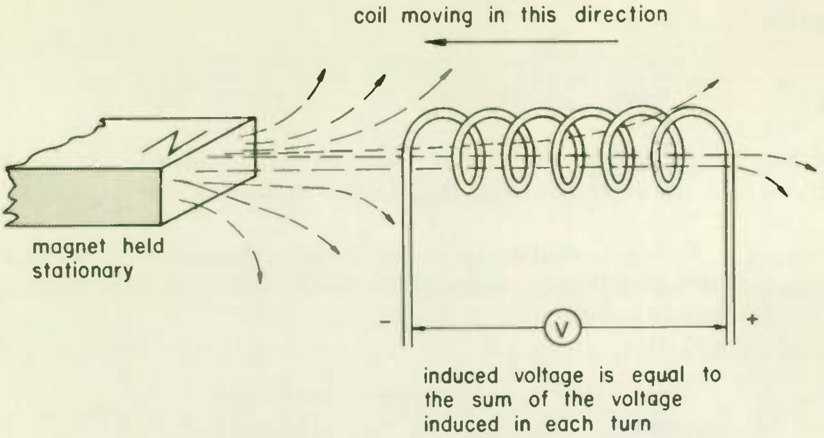

Fig. 17 **A higher voltage is induced in a coil if more turns are added; it is equal to the voltage induced in each turn multiplied by the number of turns.**

Practical devices based on the principle of induced voltage have coils of many turns because the voltage induced in a single loop is not great. The induced voltage is proportional to the number of turns—multiply voltage induced in each turn by the number of turns to get the total induced voltage. You can find the voltage induced in a coil by the equation

$$e = \frac{N\Phi}{100{,}000{,}000t}$$

where e = induced voltage, in volts
N = number of turns of the coil
Φ = number of magnetic flux lines changed through the coil
t = time for the flux lines to change
and 100,000,000 is a factor which comes from the fact that when the flux changes at the rate of 100,000,000 lines of force per second, one volt is induced.

Notice that the formula shows that the induced voltage increases if the number of turns of the coil is increased. Also notice that the formula shows that the induced voltage is proportional to the flux change Φ divided by time t, or Φ/t. This is precisely what is meant by the *rate of change of flux*.

EXAMPLE 1 . . . A 30-turn coil of wire is passed through a magnetic field such that the flux lines threading the coil change at the rate of 2,000,000 lines of force in 0.2 s. The induced voltage is ________ volts.

SOLUTION . . .

$$e = \frac{N\Phi}{100{,}000{,}000t} = \frac{30 \times 2{,}000{,}000}{100{,}000{,}000 \times 0.2} = \frac{60{,}000{,}000}{20{,}000{,}000} = 3\text{ V, ans.}$$

Now let's consider another example with the same coil and the same magnetic field, the difference being that the coil is moved faster.

EXAMPLE 2 . . . A 30-turn coil of wire is passed through a magnetic field such that the flux lines threading the coil change at the rate of 2,000,000 lines of force in 0.1 s. The induced voltage is ________ volts.

SOLUTION . . .

$$e = \frac{N\Phi}{100{,}000{,}000t} = \frac{30 \times 2{,}000{,}000}{100{,}000{,}000 \times 0.1} = \frac{60{,}000{,}000}{10{,}000{,}000} = 6\text{ V, ans.}$$

The induced voltage in the second example is twice as great because the same number of flux lines changes through the coil in only half the time.

WHAT HAVE YOU LEARNED?

1. A coil of wire is held at a *fixed* distance from a very powerful permanent magnet. The voltage induced in the coil will be
(a) proportional to the strength of the magnetic field.
(b) proportional to the number of turns of wire.
(c) both (a) and (b).
(d) zero.

2. If the number of lines of flux threading a coil changes 2000 lines in 0.006 s, the rate of change of flux is (a)________ lines per second. If the coil has 100 turns of wire, the voltage induced will be (b)________ volts.

3. Figure 18 shows a simple tachometer for measuring the speed of a turntable in rpm. A tiny permanent magnet is mounted on the turntable and passes a pickup coil once each revolution. As the magnet passes the coil, a voltage "spike" is induced in the coil. This is fed to a pulse-counting circuit that counts the number of spikes per minute and thus registers the speed of the turntable in rpm. Is the amplitude of the induced voltage spike affected by the speed of the turntable? (a) *(yes) (no)* Why? ____________________. Using a stronger permanent magnet on the turntable would (b) *(increase) (decrease) (not affect)* the amplitude of the induced voltage spike. Doubling the number of turns in the pickup coil would cause the induced voltage spike to (c) *(decrease to about one-half) (double) (remain the same).*

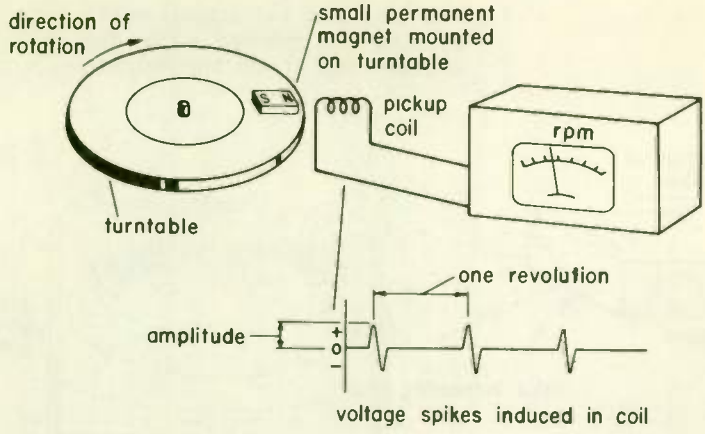

Fig. 18

4. Figure 18 shows that the voltage of each spike reverses polarity, so that the induced current evidently flows in one direction during half of the spike period and in the other direction during the other half. When and why does this induced current reversal occur?

ANSWERS

1. (d) . . . Since the coil is held at a fixed distance from the magnet, there is no *change* in flux threading the coil. Therefore the voltage induced in it is zero.
2. (a) 333,000 . . . The flux changes 2000 lines in 0.006 s, so 2000/0.006 = 333,000 lines per second.
(b) 0.333 . . . Using the formula

$$e = \frac{N\Phi}{100{,}000{,}000t} = \frac{100 \times 2000}{100{,}000{,}000 \times 0.006} = \frac{200{,}000}{600{,}000} = 0.333 \text{ V}, \textit{ans.}$$

3. (a) Yes . . . The induced voltage is proportional to the rate of change of flux threading the coil, so the faster the magnet moves past the coil, the higher the induced voltage spike will be.
(b) Increase . . . For any given speed, the stronger the magnet, the more lines of flux that will change through the coil per second, so the higher the induced voltage will be.
(c) Double . . . The induced voltage is directly proportional to the number of turns in the coil.
4. As the revolving turntable brings the magnet closer and closer to the coil, the number of lines of force threading the coil continually increases, giving an induced voltage of one polarity. After the magnet passes the coil and starts to move away, the number of lines of force threading the coil decreases. This induces a voltage of the opposite polarity. The reversal in polarity occurs at the moment when the magnet is directly opposite the coil.

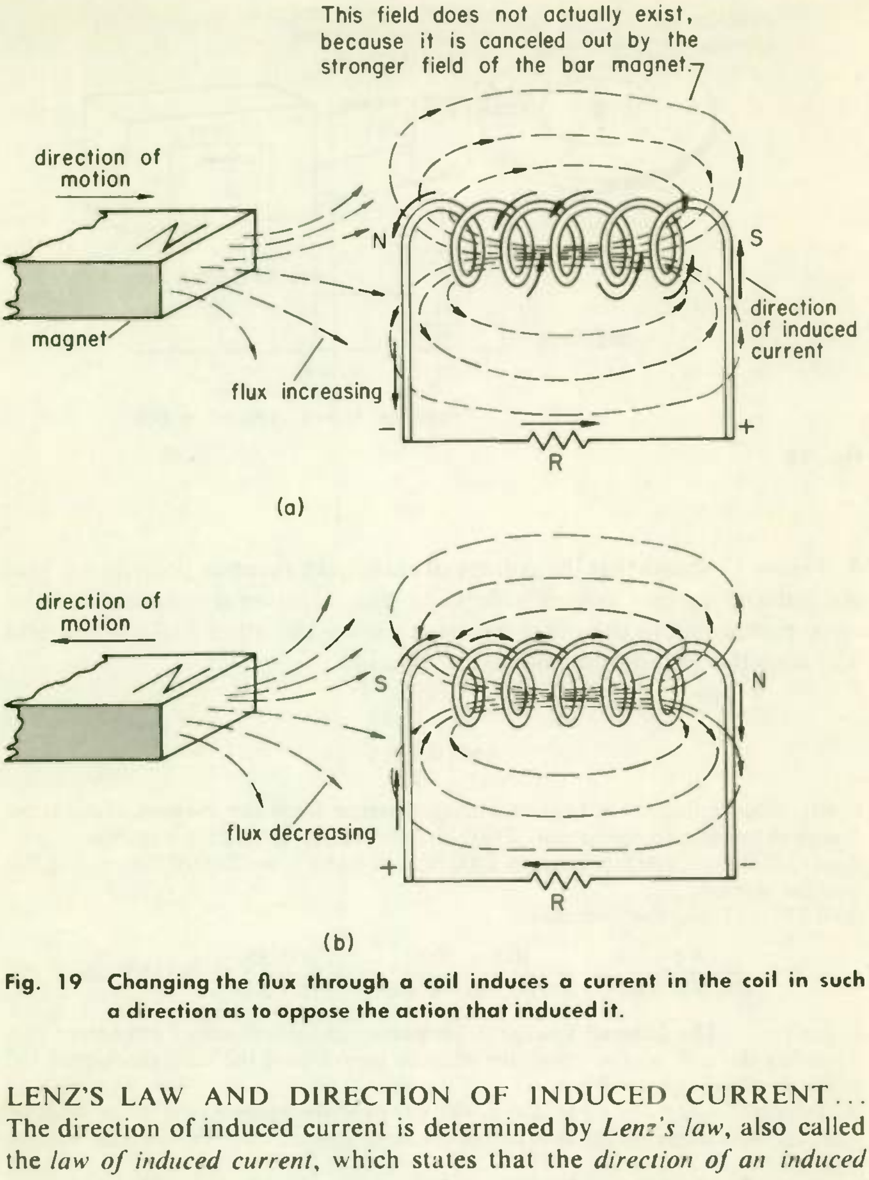

Fig. 19 **Changing the flux through a coil induces a current in the coil in such a direction as to oppose the action that induced it.**

8 LENZ'S LAW AND DIRECTION OF INDUCED CURRENT...

The direction of induced current is determined by *Lenz's law*, also called the *law of induced current*, which states that the *direction of an induced current is always such as to oppose the action that produced the induced current*. In Fig. 19(a) the action that induces the current is the magnet moving toward the coil. The direction of the induced current must be such as to set up a force that opposes the magnet being moved toward the coil—a force that tries to push the magnet away from the coil.

You have learned that when current flows through a coil, the coil sets up lines of force and becomes an electromagnet. Thus the current induced in the coil in Fig. 19(a) makes the coil an electromagnet. By Lenz's law the north pole of this electromagnet will be to the left so that it repels the bar magnet north pole being brought toward it. (Remember that like poles repel.)

The induced current direction is such as to magnetize the coil so that it opposes the motion of the bar magnet. In Fig. 19(a) the current direction must make a north pole at the left end of the coil. To find that direction, use the left-hand rule. Hold the coil with your left hand so that your thumb points to the left (that is, toward the north pole of the coil). Then your fingers will point in the direction of current flow.

In Fig. 19(b) the magnet is being pulled away from the coil. Now the direction of induced current is such as to set up an action trying to pull the magnet back toward the coil. The left end of the magnet now becomes a south pole so as to attract the north pole being pulled away. Knowing that the north pole of the coil must be to the right, the left-hand rule can be used as before to find the current direction.

Figure 19(a) shows two magnetic fields opposing each other, the field of the magnet and the field produced by the coil current. The figure implies that these two flux sets flow in opposite directions within the coil. But it is impossible to have intermixed flux lines that are in opposite directions. What happens is that the lines of force from the magnet, being the stronger, overcome the flux of the coil, so that there is in fact only one field, the field of the magnet as shown in Fig. 17. The effect of the lines of force that the coil is trying to set up in opposition to the field of the magnet is to weaken the field of the magnet.

Thus the strength of the flux through the coil is less than it would be if it were not for the bucking action of the flux that the current through the coil is trying to set up. If *R* in Fig. 19(a) were increased so that the induced current would be less, then the flux threading the coil would be greater. Also, since the lower current could not set up such a strong opposition action, the magnet could be moved toward the coil easier than when *R* was of lower value.

In Fig. 19(b), where the two flux sets are aiding each other, the flux through the coil is higher than it would be if there were not current flow in the coil. If *R* were changed to a lower value, the increased induced current would further increase the flux through the coil.

WHAT HAVE YOU LEARNED?

1. Show that the direction of current flow in the loop of Fig. 15 is as indicated.

2. Suppose in Fig. 19(a) that the bar magnet is held stationary and the coil is moved toward the magnet. The current direction through R will be *(toward the right) (toward the left)*.

3. The direction of induced current is always such as to produce an action that *(aids) (opposes)* the action that induced the current.

4. The reason why moving a magnet toward a coil will induce a voltage is that (a) *(the magnet and coil are changing their positions relative to each other) (the number of lines of force threading the coil is being varied)*. That being the case, having some component moving is not a necessary requirement for an induced voltage. The only requirement is to somehow vary the strength of the flux (b) ________________ the coil. In the next topic you will see how this can be done without having any moving parts.

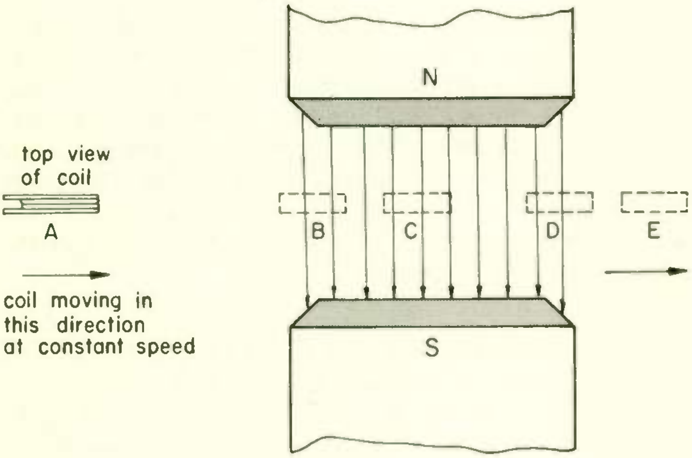

Fig. 20

5. The amplitude of the induced voltage in Fig. 20 when the coil is in position C is *(zero) (more than the induced voltage at position B or D) (the same as the induced voltage at position B or D)*.

6. The induced voltages at positions B and D are of the *(same) (opposite)* polarity.

1. Use the left-hand rule.
2. Toward the right . . . If you move the coil toward the magnet, the left end of the coil will become a north pole in order to resist the motion that is bringing the coil toward the magnet.
3. Opposes 4. (a) The number of lines of force threading the coil is being varied. (b) Threading
5. Zero . . . The amount of flux threading the coil must be changing in order to have an induced voltage. At position *C* the coil is moving within a uniform field, so that the number of lines of force threading the coil is not changing.
6. Opposite . . . The coil is entering the field at position *B*, and therefore the lines of force threading it are increasing. At position *D*, where the coil is leaving the field, the number of lines of force threading the coil is decreasing.

9

INDUCING A VOLTAGE BY MUTUAL INDUCTION . . . To induce a voltage in a coil, the strength of the flux threading the coil must be varied. In the preceding topics we varied the field by moving a permanent magnet toward or away from the coil. A magnetic field is set up by current flow through a coil. So another way we can induce a voltage in a coil is by changing the magnetic field developed by another coil. This method of inducing a voltage, or emf, is called *mutual induction*.

Figure 21 shows a coil *P*, called the *primary*, connected through a switch

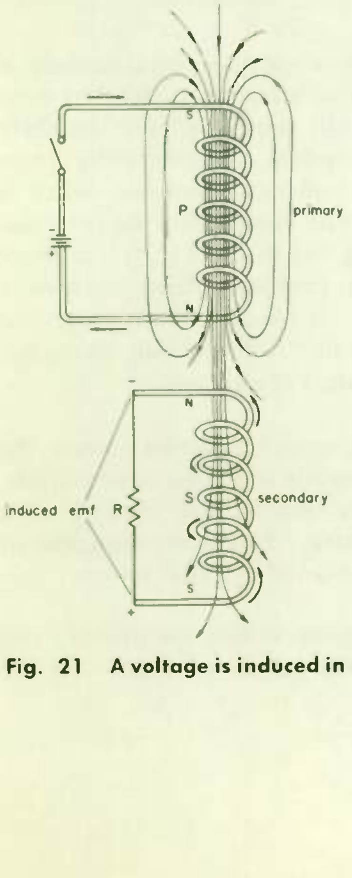

Fig. 21 A voltage is induced in the secondary by mutual induction.

to a battery. When the switch is closed, current will flow through the primary coil and cause a magnetic field to be built up around the coil. Applying the left-hand rule, we see that the north pole of the magnetic field will be downward in the figure. Just below the primary coil, we have placed another coil *S*, which we call the *secondary*. This coil is not connected electrically to the primary coil, but is placed physically close to it. Now when the switch is closed, current will flow through the primary and a magnetic field will start to build up, so that the secondary coil "sees" an increasing amount of flux passing through it. The effect of this changing flux will be the same as if a permanent magnet were brought nearer the coil. That is, a voltage will be induced in the coil.

What is the direction of the current induced in the secondary? Lenz's law states that the direction must be such as to oppose the action that induced the current. The increasing magnetic field is the action that is inducing the current. Hence, the induced secondary current tries to keep the lines of force from increasing. It does so by trying to set up a field of its own that opposes—and therefore weakens—the primary field. The secondary coil must have its north pole at the top so that it tries to force flux in the direction opposite to that of the flux from the primary that is threading the coil. Applying the left-hand rule shows that secondary current must flow as shown in order to get a north pole at the top of the secondary.

The emf is induced in the secondary only while the magnetic field is changing. Within a fraction of a second or so after the switch has been closed the field generated by the primary will stop increasing, so there will be no *change* in flux threading the secondary. Consequently, there will be no voltage developed across the secondary. When the switch is opened again, the magnetic field established by the primary starts to collapse. Now the secondary sees a decreasing flux through it. Once more a voltage is induced in the secondary, but this time the polarity is opposite to what it was when the switch was closed. If we continually close and open the switch rapidly enough, so that the flux is continually changing, there will be an induced voltage in the secondary at all times.

If we replace the battery in Fig. 21 by an alternating-current source, the current through the primary will be continuously changing in amplitude. As a result the primary flux will continuously vary, so that there will be a continuous output voltage from the secondary. This is the principle of operation of a transformer, to be discussed in detail in a later lesson.

Notice that in Fig. 21 not all of the flux lines threading the primary coil pass all the way through the secondary. However, we know that the

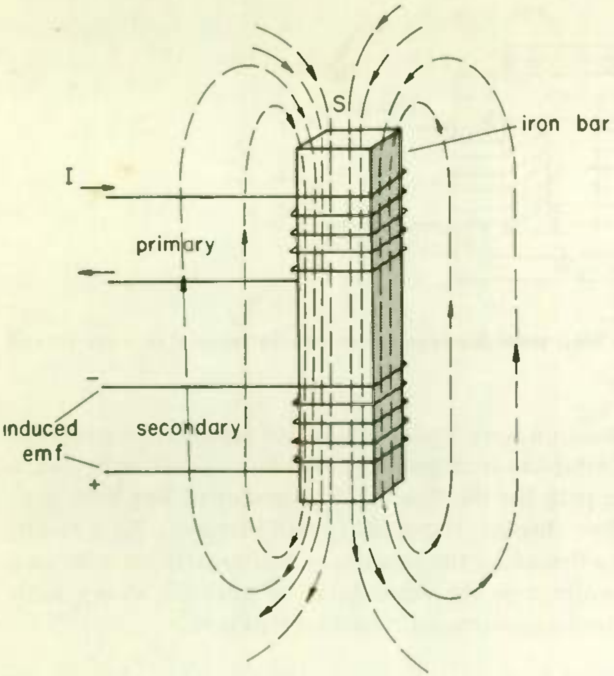

Fig. 22 **Iron core confines flux path so that almost all lines threading primary also thread secondary.**

greater the number of flux lines that change through the secondary coil each second, the greater is the induced voltage. If we can in some way confine the magnetic lines of flux of the primary so that *all* of the lines threading the primary also thread the secondary, we will have the maximum possible voltage induced. You learned in an earlier topic that soft iron has a much lower reluctance than air. So if we wrap both coils around the same iron path, or core, practically all of the lines threading the primary will also thread the secondary. This is shown in Fig. 22. Thus the voltage induced in the secondary of Fig. 22 is higher than in that of Fig. 21.

Although almost all of the lines threading the primary also thread the secondary, the lines of flux leaving the north pole of the iron core, Fig. 22, must travel through air to get back to the south pole of the core. Since the reluctance of an air path is much higher than that of an iron path, the total reluctance of the entire path is still higher than it would be if the entire path were iron. Consequently, the number of flux lines that can be generated by the current flow through the primary coil is less than it would be if the entire path were iron.

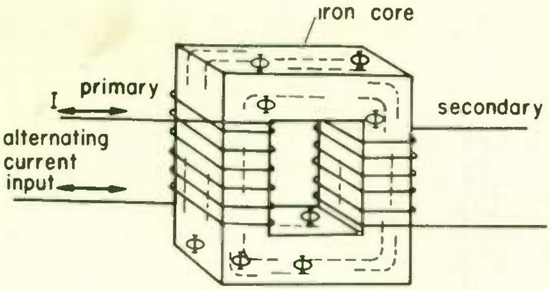

Fig. 23 **Complete iron loop provides low reluctance so more flux lines thread secondary.**

We can improve the situation if we bend the iron bar around in a complete loop, thus making a complete iron path for the flux. This will give a much lower reluctance path for the flux, so the number of flux lines generated by the current flow through the primary will increase. As a result, the number of flux lines threading the secondary will greatly increase and thus induce a higher voltage in the secondary. Figure 23 shows both windings wrapped around a continuous closed loop of iron.

Figure 23 illustrates the basic iron-core transformer. If by some external means the current in the primary is kept continuously varying, the output from the secondary will be continuous. Alternating current varies continuously and therefore will make the transformer work. The primary of the transformer is connected to an alternating-current source, and an alternating voltage is developed across the secondary.

WHAT HAVE YOU LEARNED?

1. Figure 24 shows two coils wound one on top of the other on the same form. When the switch S is closed, a voltage (a) *(will) (will not)* be induced into the secondary. This is because (b) *(the primary shields the secondary from the magnetic flux, so that no voltage can be induced) (the lines of force threading the secondary are increasing).*

2. Refer again to Fig. 24. Current has been flowing through the primary for several minutes. Is there a voltage being induced into the secondary? (a) *(yes)(no)* Why? ______________________. If switch S is opened, will there be a voltage induced in the secondary? (b) *(yes)(no)* Why? ________

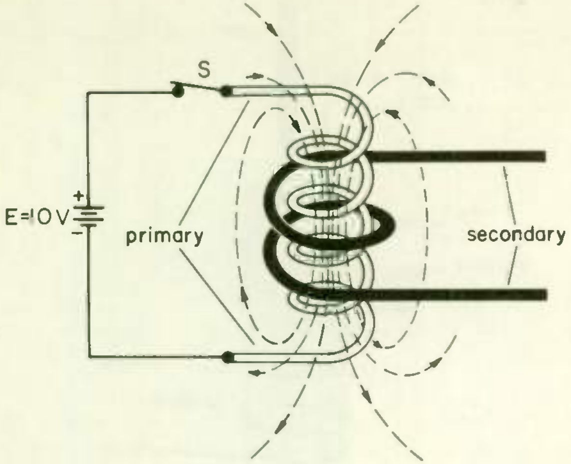

Fig. 24

3. Figure 25 shows two coils not wound on the same form, and they are separated by a short distance. When switch *S* is closed, will there be any voltage induced in the secondary? *(yes) (no)* Why? ________________

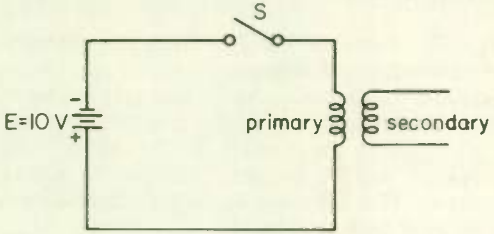

Fig. 25

4. Figure 26 shows two coils wound on a hollow paper tube. The primary coil is connected to an alternating-current source. A continuous alternating voltage (a) *(is) (is not)* induced in the secondary. Suppose the iron bar, or slug, shown in the figure, is gradually lowered down into the tube. As the slug gets farther and farther down into the tube, the voltage induced in the secondary will (b) *(remain constant) (gradually increase) (gradually decrease)*.

ANSWERS

1. (a) Will (b) The lines of force threading the secondary are increasing... There is only one requirement for obtaining an induced voltage: the lines of force threading the coil must be changing. The fact that there is another winding between the secondary and the core (where the flux is) will not keep a voltage from being induced.

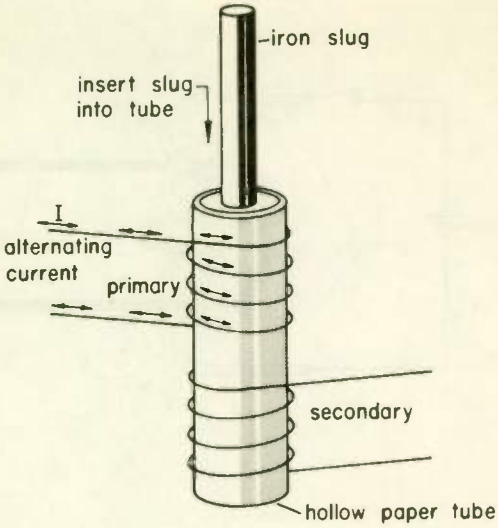

Fig. 26

2. (a) No . . . Although flux is still threading the secondary, there is no change in flux, so no voltage is induced.
(b) Yes . . . The magnetic field will collapse and thus induce a voltage in the secondary.
3. Yes . . . See Fig. 27. Some of the flux from the primary is still threading the secondary and thus inducing a voltage.
4. (a) Is (b) Gradually increase . . . As the slug gets farther down into the tube, the iron will offer a lower reluctance for the magnetic lines of flux. Thus there will be more flux generated by the primary, so the change in number of flux lines threading the secondary will be greater. Hence, the voltage induced in the secondary will increase. This is known as an adjustable-core transformer, and it is used in a wide variety of applications.

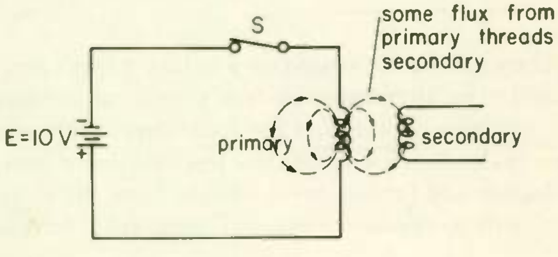

Fig. 27

INDUCTANCE

Direct current flows through a coil without opposition, if we neglect the

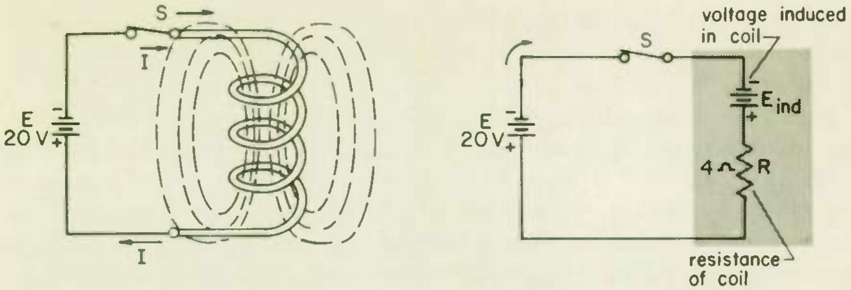

(a) actual circuit

(b) Equivalent circuit immediately after S is closed

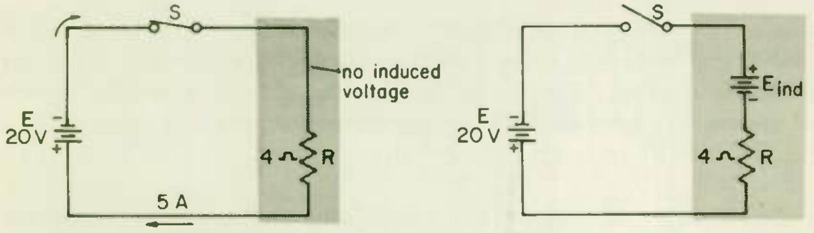

(c) Equivalent circuit sometime after S is closed

(d) Equivalent circuit immediately after S is opened

Fig. 28 A counter emf is induced in a coil by changing flux.

resistance of the winding, but not so for alternating current. An important property of a coil called *inductance* tries to keep alternating current, or any current that is changing in value from going through the coil. Inductance is one of the most important principles used in electronics.

10 SELF-INDUCED VOLTAGE . . . You learned with reference to Fig. 21 how a changing flux developed by the primary will induce a voltage in the secondary. Now, a changing flux will induce a voltage into *any* turn of wire that the flux is threading. Since the varying flux in Fig. 21 threads the primary as well as the secondary, a voltage is induced in the primary as well as in the secondary. Of course, this is true whether or not there is a secondary.

Consider the circuit of Fig. 28(a). When switch *S* is closed, current will start to flow in the coil, and as a result lines of force will start to build up as shown. This increasing flux induces a voltage in the coil itself, called a *self-induced voltage*. What is the polarity of this self-induced voltage? Lenz's law gives us the answer. The polarity of the self-induced voltage must be such as to oppose the action that caused the voltage to be induced. It is the battery current through the coil, rising from zero when the switch was closed, that causes the voltage to be induced. That being the case, the induced voltage will be such as to oppose the current flow through the coil.

Figure 28(b) shows the equivalent circuit immediately after switch S is closed. Resistance R, shown as 4 Ω (ohms), is the resistance of the wire from which the coil is wound. The equivalent battery E_{ind} represents the voltage induced in the coil by the changing current. Since this self-induced emf opposes the rise in current, its polarity must be such, as shown, that it "bucks" the regular battery voltage and thus tries to stop the current.

When a self-induced voltage opposes the regularly applied voltage, as it does in Fig. 28(b), it is often called a *counter electromotive force*, or *counter emf*, or *cemf*. The action of the counter emf when the switch is first closed is to keep the coil current from reaching full value until a fraction of a second or so after the switch is closed.

After the switch has been closed for a little while, the current through the coil reaches full strength. Since the current is no longer increasing, the lines of force threading the coil are no longer increasing. As a result, there is no longer any counter emf, and the equivalent circuit is as shown in Fig. 28(c). The only opposition to current flow is now the 4-Ω resistance of the coil, so that by Ohm's law the current is 5 A, and the coil current will stay at that value until the switch is opened.

When the switch in Fig. 28 is opened, the current must go from 5 A down to zero. This means that the lines of force threading the coil must rapidly reduce to zero. The changing of the lines of force again induces a voltage in the coil, but of polarity opposite to that of the self-induced voltage generated when the switch was closed; see Fig. 28(d). The self-induced voltage E_{ind} will have the polarity shown because it is trying to prevent the current from decreasing in value when the switch is opened. The current decreasing in value is the action that causes the counter emf, and by Lenz's law, the induced voltage must oppose this action. The counter emf will cause the switch to arc more in opening than would be the case if there were no coil in the circuit. With a large coil of many turns, the self-induced voltage caused by a switch suddenly being opened can be so high as to puncture the coil insulation.

11 CURRENT RISE IN AN INDUCTIVE CIRCUIT

Because a coil can have a self-induced voltage, a coil is said to have the property of *inductance*. For this reason, we call the coil an *inductor*. Figure 29(a) shows a coil, or inductor, connected to a voltage source, which in this case is a battery. Now besides having the property of inductance, the coil also

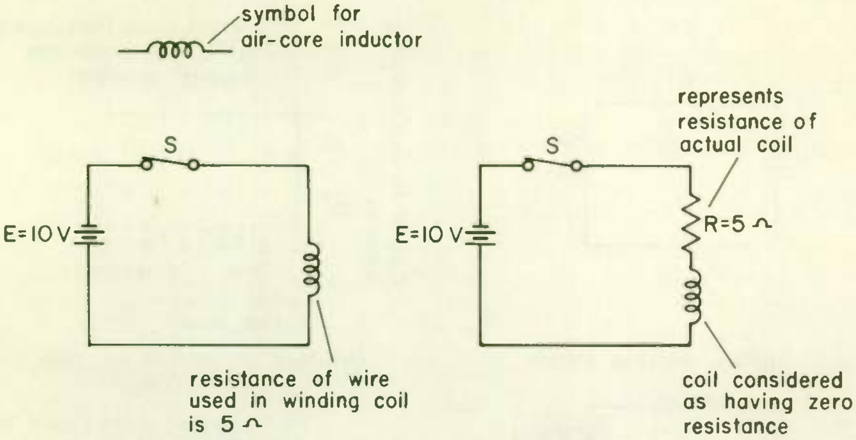

(a) Actual circuit (b) Equivalent circuit

Fig. 29 Actual and equivalent circuits of a coil connected to a voltage source.

has some resistance—the resistance of the wire that forms the coil. The coil in Fig. 29(a) is assumed to have a resistance of 5Ω.

Although an inductor actually has some resistance, it is very helpful to consider it as a pure inductance in series with a resistance. That is, even though the resistance of the coil is evenly distributed along the entire length of the coil, we can represent an inductor as a pure inductance in series with a resistance equal to the resistance of the actual coil. The equivalent circuit of the actual inductor is shown in Fig. 29(b).

Now that we know what the equivalent circuit of an inductor looks like, we are in a position to discuss how the current rises in an inductive circuit as compared to the current rise in a resistive circuit. Figure 30(a) shows a purely resistive circuit connected to a battery. When switch *S* is closed, the current through the resistor will immediately rise to its maximum value, Fig. 30(b). The maximum value of current can be found by Ohm's law to be $I = E/R = 10/5 = 2$ A.

In Fig. 30(c) we see the equivalent circuit of an inductor connected to a battery. We know that the effect of the cemf induced in the coil by the increasing current through the coil prevents the current from reaching its maximum value immediately. The cemf is not constant at all times, but decreases with time after the switch is closed.

Remember that the cemf is proportional to the rate of change of current through the coil. At the instant the switch is closed in Fig. 30(c), the

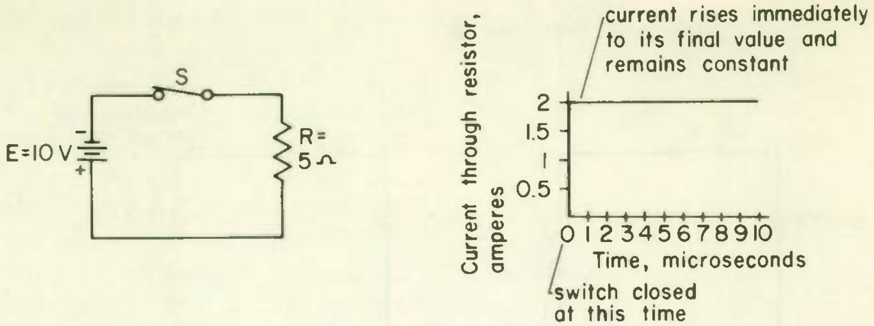

(a) Pure resistive circuit

(b) Graph of current vs. time in a resistive circuit

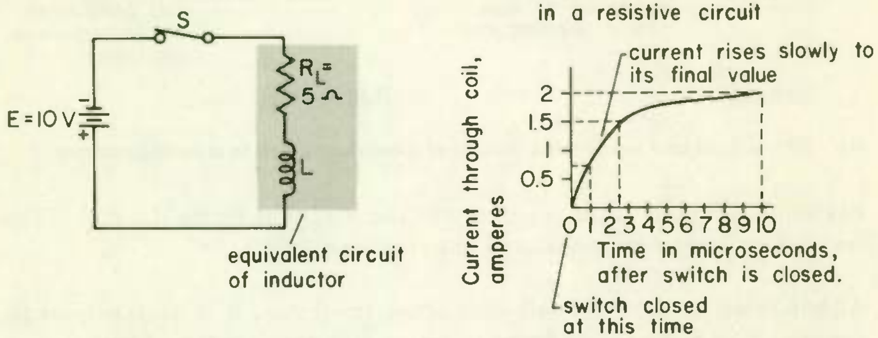

(c) Circuit with an inductor

(d) Graph of current vs. time in an inductive circuit

Fig. 30 **Current in a purely resistive circuit rises immediately to its final value, but current through an inductor does not.**

current through the coil is trying to change from zero to its maximum value. The highest value that the current can ever reach in the coil is limited by the resistance of the coil, which is 5 Ω. So the current is trying to change from zero to a value of $I = E/R = 10/5 = 2$ A. The moment the switch is closed, the cemf is greatest. The cemf gradually decreases in value, and the current through the coil gradually increases.

The graph of Fig. 30(d) is an example of how the current comes up to full value. At the instant the switch is closed, the current through the coil is practically zero. At about 2.5 microseconds later, the current is only 1.5 A, so it still has not reached its maximum value of 2 A. The cemf is less at this time because the current is not changing as fast as when the switch was first closed. Generally speaking, the greater the difference between the actual current through an inductor and its final value, the greater will be the cemf.

Finally, at about 10 microseconds after the switch was closed, the current through the coil has essentially reached its maximum value of 2 A, as shown in Fig. 30(d). The actual time required to reach the various current values will depend upon the size of the coil as well as the coil resistance. The values in the graph of Fig. 30(d) are only an example.

To summarize this topic, we have seen that when current tries to increase through an inductor, it sets up an increasing flux. This increasing flux threads the turns of the coil and thus induces a voltage, called a counter emf. The polarity of the cemf is such that the cemf opposes the applied voltage, so the net effect of the cemf is that it opposes an increase in current through the inductor and thereby prevents the current from reaching its final value immediately. That is, the cemf acts to *delay* the rise of current in the inductor.

The fact that current through a coil does not reach its final value immediately is the fundamental property of inductance, and it will be studied more thoroughly in the next topic.

WHAT HAVE YOU LEARNED?

1. When voltage is first applied to a coil, the current through the coil does not immediately rise to its final value because a cemf that is induced in the coil ______________ a change in current.

2. The faster the current is changing through a coil, the *(higher) (lower)* will be the cemf.

3. In Fig. 30(b), the current through the resistor at 1 microsecond after the switch is closed is (a) ________ amperes. But Fig. 30(d) shows that the current through the coil at 1 microsecond after the switch is closed is only (b) ________ amperes.

4. A coil is wound from 25 ft of No. 42 copper wire, which has a resistance of approximately 1.67 Ω per foot. What will be the final value of current through the coil if it is connected to a 6-V battery? ________ milliamperes.

ANSWERS

1. Opposes 2. Higher

3. (a) 2 . . . The current rises to its final value immediately when the switch is closed.

(b) 0.75 . . . Find 1 microsecond on the time scale along the bottom of the graph. Then go straight up from there to where you intersect the curve of the increasing

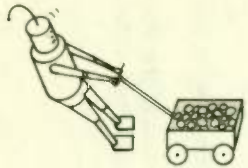

Inertia makes the wagon oppose getting started when it is at rest.

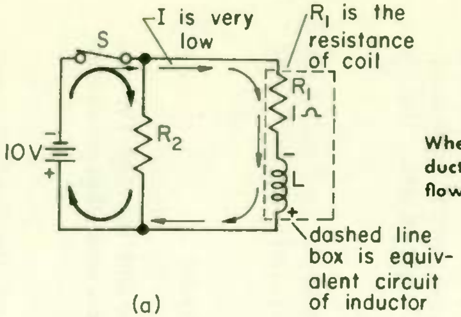

(a)

When switch *S* is first closed, the inductance of *L* opposes the start of current flow.

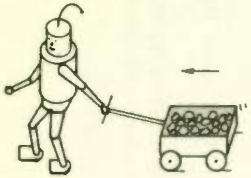

Once the wagon is rolling, it continues to roll easily. The only work required is that needed to overcome friction in the wheel bearings.

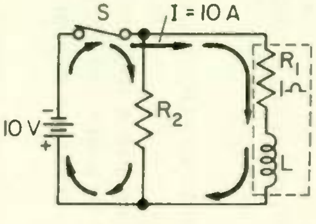

(b)

After the switch has been closed for a short time, the only thing limiting the current flow is the resistance of the coil.

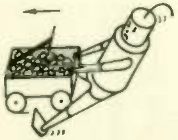

Inertia tends to keep the wagon rolling once it has started.

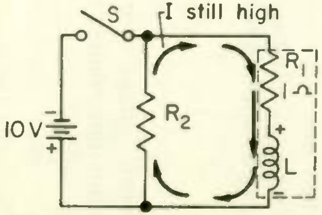

(c)

Inductance tends to keep the current flowing in the same direction through the coil once it has started.

Fig. 31 Inductance in an electric circuit corresponds to inertia in a mechanical system.

current. Now go over to the left until you intersect the current scale. This shows that the value of current at that point is 0.75 A.
4. 144 . . . Since the resistance of the wire is 1.67 Ω per foot and you have 25 ft of wire, the total resistance of the wire used to wind the coil is ohms per foot × number of feet = 1.67 × 25 = 41.75 Ω. The final current through the coil will be determined by the resistance of the coil and will therefore be equal to $I = E/R = 6/41.75 = 0.144$ A or 144 mA (milliamperes).

12 INDUCTANCE . . . We have stated that the cemf produced in an inductor opposes an increase in current through the coil. More precisely, inductance is that property of a coil which opposes any *change* in current through the coil.

Figure 31 shows how inductance in an electrical circuit can be compared to inertia in a mechanical system. If you try to pull a heavily loaded wagon, it will oppose getting started. Likewise, an inductor in an electrical circuit opposes any sudden increase in current; see Fig. 31(a). After the wagon is started rolling, it continues to roll along easily, and the only thing you have to work against is the friction in the wheel bearings.

Figure 31(b) shows that once current has been flowing for a short time through the inductor, it will continue to flow easily. Then the only thing limiting the flow of current will be the resistance of the coil itself. Now when you try to stop the moving wagon, it opposes the change in speed. That is, it wants to keep on rolling. Similarly, as in Fig. 31(c), current will continue to flow after the battery has been disconnected. Or in other words, the current continues after the source forcing the current through the coil is removed. The current will, of course, decrease to zero when the magnetic field has collapsed.

Resistor R_2 is shown in Fig. 31 merely to supply a path through which the current generated by the inductor can flow. Notice that the current flow through R_2 reaches its maximum value as soon as the switch is closed. Current would immediately stop flowing through R_2 when the switch was opened if it were not for the presence of the inductor.

Inductance is usually represented by the letter L and is expressed in henrys. The *henry* is a measure of the counter emf generated by the coil in opposing a change in current. For example, if a coil has an inductance of one henry and current flow through the coil changes by one ampere in the time of one second, the coil will generate a cemf of one volt.

Because the henry is a relatively large unit of measurement, it is often more convenient to use smaller units for measuring inductances. The millihenry (mH) is equal to 1/1000 henry, and the microhenry (μH) is equal to 1/1,000,000 henry.

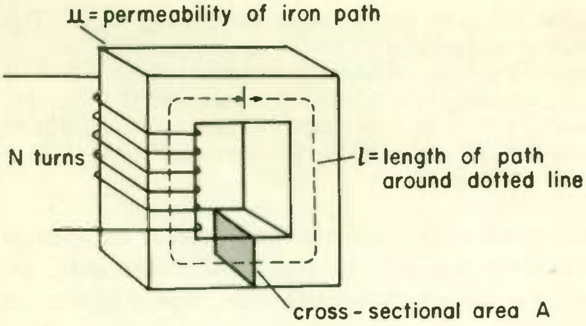

Fig. 32 **The inductance of a coil depends on its physical construction.**

Now let's consider some factors affecting the inductance of a coil. The inductance of a coil is entirely dependent upon the physical construction of the coil; it does not depend on the properties of any circuit in which the coil is used. No matter where you use a certain inductor, it will always have the same amount of inductance, as long as you don't change its physical characteristics.

As an example of how the inductance of an inductor is related to the physical construction of the coil, let's consider an inductor made by wrapping turns of wire on a closed iron path, as shown in Fig. 32. When the coil is made up as shown, the reluctance of the magnetic path is constant, and the inductance can be found by the formula

$$L = \frac{0.4N^2\mu A}{100{,}000{,}000l}$$

where L = inductance, in henrys
N = number of turns
μ (mu) = permeability of the core material
A = cross-sectional area of the magnetic path
l = length of the magnetic path, in centimeters

This formula shows that the value of inductance increases directly with the *square* of the number of turns. That is, if one coil has twice as many turns as another, it will have four times as much inductance. Inductance also varies directly with the permeability of the material and the cross-sectional area of the magnetic core, but it varies in inverse proportion with the length of the magnetic path.

Many inductors are not wound on closed iron cores, like the one in Fig. 32, but are wound on a variety of forms. Each of the two coils

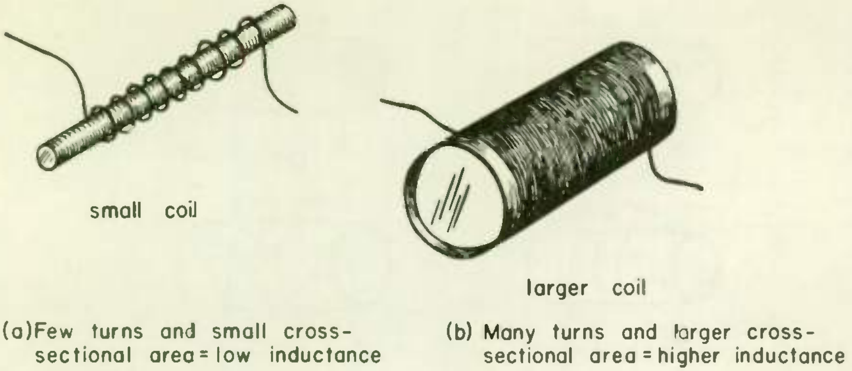

(a) Few turns and small cross-sectional area = low inductance

(b) Many turns and larger cross-sectional area = higher inductance

Fig. 33 Two cylindrical coils.

shown in Fig. 33 is wound on a straight rod, or other core, whose length is several times its diameter. We will not discuss equations for finding the inductance of such coils, because the formulas change every time you change the shape of the coil. What is important to note is that the same basic relationships hold for the cylindrical coil as for the inductor wound on the closed form. That is, inductance increases if more turns are added; also, inductance increases if the cross-sectional area of the core on which the coil is wound is increased. If the cylindrical coil is wound on an iron core, it will have much more inductance than the same number of turns wound on a hollow paper tube.

WHAT HAVE YOU LEARNED?

1. You are asked to get an r-f coil rated at 50 mH. The stockroom has only 0.05- and 0.5-henry coils *(Neither) (the 0.05-henry) (the 0.5-henry)* coil is acceptable.

2. Two iron-core inductors have the same physical characteristics except for the permeability of their cores. The permeability of one core is 2000 and that of the other core is 1500. If you wanted a coil having the higher inductance, you would select the one that has the core with a permeability of ________.

3. The number of turns in a coil wound on a toroidal form (as in Fig. 13) is increased from 300 to 900. The resulting inductance is ________ times as large as the original.

4. Two air-core coils have the same number of turns and the same diam-

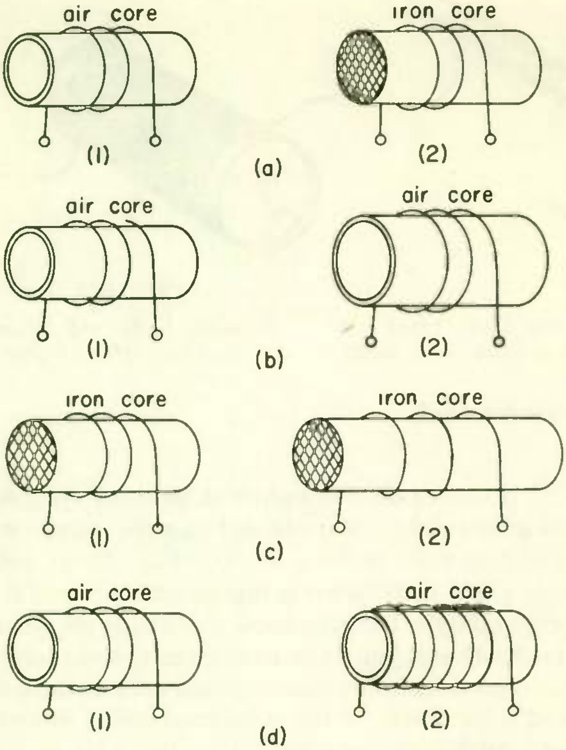

Fig. 34

eter. The length of one coil is twice as great as that of the other. If you wanted a coil having the smaller inductance, you would select the ______________ coil.

5. Two coils are wound on identical hollow paper tubes. One coil is wound with No. 30 copper wire, and the other is wound with No. 20 copper wire. Although both coils have an equal number of turns, the turns of wire are so spaced that the length of both coils is the same. The coil that has the higher inductance is *(the coil wound with No. 30 wire) (the coil wound with No. 20 wire) (neither—both coils have the same inductance).*

6. In Fig. 34(a) *(coil 1) (coil 2)* has more inductance.

7. In Fig. 34(b) *(coil 1) (coil 2)* has more inductance.

8. In Fig. 34(c) *(coil 1) (coil 2)* has more inductance.

9. In Fig. 34(d) *(coil 1) (coil 2)* has more inductance.

ANSWERS

1. The 0.05 henry . . . 50 mH = 0.05 henry
2. 2000 . . . The higher the permeability, the greater the strength of the magnetic field and, therefore, the greater the inductance.
3. Nine . . . The inductance varies as the square of the turns. Tripling the number of turns increases the inductance by 3^2, or 9, times.
4. Longer . . . The longer coil has a longer magnetic path and therefore more reluctance, which reduces the number of lines of force and the inductance.
5. Neither—both coils have the same inductance . . . The coil wound with No. 20 wire has less resistance, so it can carry more current, but this does not enter into the calculation for inductance. Notice that wire size is not involved in the formula on page 38.
6. Coil 2 . . . The iron core has a higher permeability than air.
7. Coil 2 . . . The cross-sectional area of the coil is greater.
8. Coil 1 . . . This coil has the shorter length.
9. Coil 2 . . . This coil has more turns.

FUNDAMENTALS OF CAPACITANCE

Every circuit that you will ever encounter in electronics, other than circuits that can be considered as sources of power, can be simplified to be considered as being made up of three basic circuit elements: *resistance*, *inductance*, and *capacitance*. These are known as *passive* circuit elements because they are not, in themselves, sources of power. You already know the basic properties of resistance and inductance. In the following section you will learn about capacitance. Once you have mastered the concepts of these three basic circuit elements, you are well on your way to being able to understand any complex electronic circuit.

13 THE ELECTRIC FIELD . . . The region about two electric charges is an *electric* (or *electrostatic*) *field* just as the region about two magnetic poles is a magnetic field. Although electric and magnetic fields are not the same, the electric field can be represented by lines of force in the same manner as the magnetic field, as shown in Fig. 35.

The lines indicate the direction of the force at all points. Notice that each line starts at a positive charge and ends on a negative charge. These lines indicate the path that would be taken by a positively charged particle if it were placed at any point in the electric field. The strength of the electric field is indicated by the closeness of the lines.

The laws of force between electric charges—that unlike charges attract one another and like charges repel one another—are similar to the laws of force between magnetic poles. The closer together and the stronge the charges, the greater the force between them.

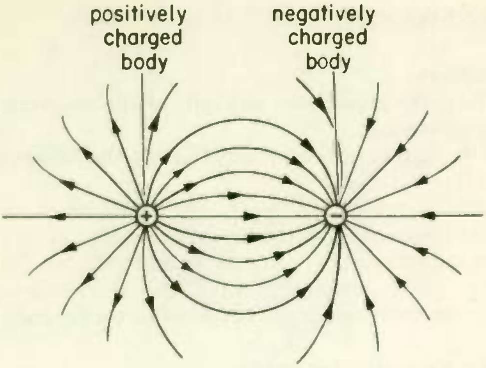

Fig. 35 Electric field between two charged bodies.

Because the electric lines in the field exert a force on charges in the field, they can cause charges to move. The field, therefore, has the ability to do work, because some effort, or work, is required to move the charges. This is just another way of saying that *energy* is present in the field, because energy can be defined as the *ability to do work*. Since the energy is present in the field whether it is being used or not, we can say that energy is *stored* in the electric field. It is because energy can be stored in an electric field that capacitors are useful. In the following topics, we will discuss exactly what a capacitor is and how it works.

WHAT HAVE YOU LEARNED?

1. Figure 36 shows two charged metal spheres standing on insulated bases. The lines with arrowheads between the two spheres indicate (a) *(electric lines of force) (magnetic lines of force) (direction in which an electron would move).* If you wanted to indicate in the figure that the charge on the spheres was increased, you would (b) *(show the spheres closer together) (draw the lines of force closer together).*

2. If an electron were placed halfway between the spheres at point *X* in Fig. 36, the electric field would cause it to move (a) *(toward the right) (toward the left) (up) (down).* If a proton were placed at point *X*, the electric field would cause it to move (b) *(toward the right) (toward the left) (up) (down).* If a permanent magnet (electrically neutral) were placed at point *X*, the electric field would (c) *(move it toward the right) (move it toward the left) (exert no force on it).*

3. If the two spheres in Fig. 36 were moved closer together, the electric

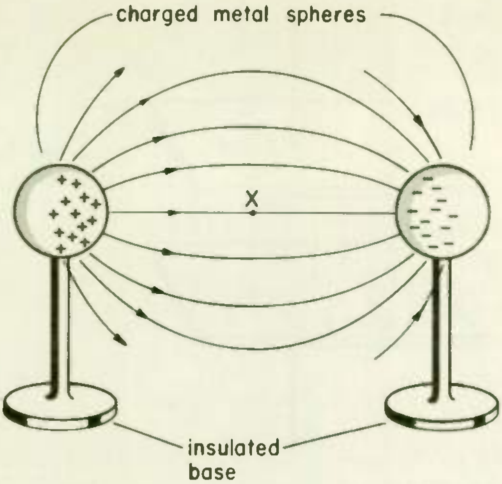

Fig. 36

lines of force would be spaced closer together. This would mean that the strength of the electric field between the two spheres had (a) *(increased) (decreased).* Now if an electron were placed at point *X* between the spheres, the force on the electron would be (b) *(increased) (decreased) (the same).*

4. There are two ways to increase the strength of the electric field between the two spheres, Fig. 36. They are (a) ________________________ and (b) ________________________.

ANSWERS

1. (a) Electric lines of force; (b) draw the lines of force closer together
2. (a) Toward the left . . . Unlike charges attract, so the electron would move toward the positively charged sphere and be repelled by the negative sphere. (b) Toward the right (c) Exert no force on it . . . An electric field does not exert a force on an uncharged body.
3. (a) Increased (b) Increased . . . The force on an electron is directly proportional to the strength of the electric field.
4. (a) Increase the charge on the spheres; (b) move the spheres closer together

14 HOW CAPACITORS WORK . . . A capacitor is a device designed to store energy in an electric field. Rather than consist of two charged bodies, as in Fig. 35, practical capacitors are usually made of metal plates separated by some insulating material. Keep in mind, though, that any two conductors, even wires, separated by air or an insulator, form a capacitor. The insulating material between the plates is called the *dielec-*

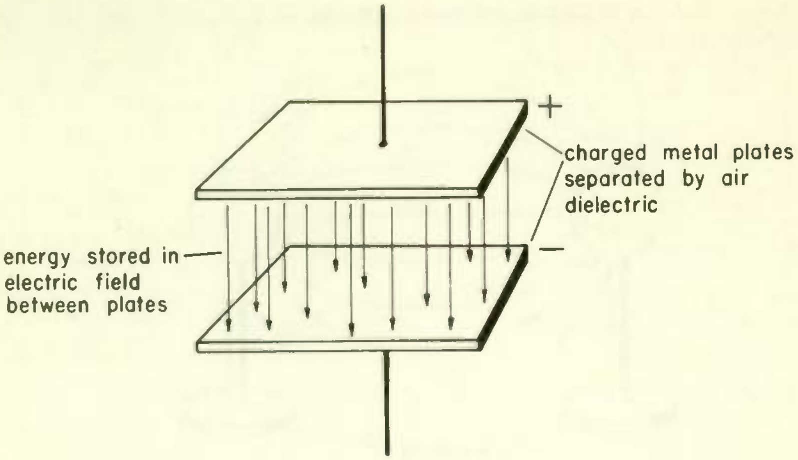

Fig. 37 Charged capacitor.

tric. Since the dielectric fills the space between the plates, the electric field between the plates actually exists in the dielectric.

Figure 37 shows a simple capacitor made of two parallel plates separated by air, so the air between the plates is the dielectric. Notice that the lines of force in Fig. 37 are confined to the space *between* the plates, rather than spread out in all directions as in Fig. 35. This is the advantage of using plates, rather than round or otherwise shaped bodies. The reason why the lines are confined between the plates is that positive and negative charges, which are on opposite plates, actually rest on the inner surfaces of the plates. That is because the charges exert a force of attraction on each other, since they are of opposite polarity. Because there is a force of attraction, the charges will be pulled together as close as possible. However, since the charges cannot travel through the dielectric, they are stopped at the surface of the plates. The lines of force then indicate the direction of strongest attraction between the two plates, which is essentially in straight lines from one plate to the other.

How does a capacitor work? One way to find out is to study the movement of electrons during the charge and discharge periods. The series circuit of Fig. 38(a) consists of a simple capacitor, a battery, a zero-center milliammeter, a single-pole double-throw switch, and a resistor.

When the switch is closed to position 1, as shown in Fig. 38(b), the battery voltage E starts to charge the capacitor. The positive terminal of the battery is connected through the milliammeter to plate A, and the negative terminal of the battery is connected to plate B.

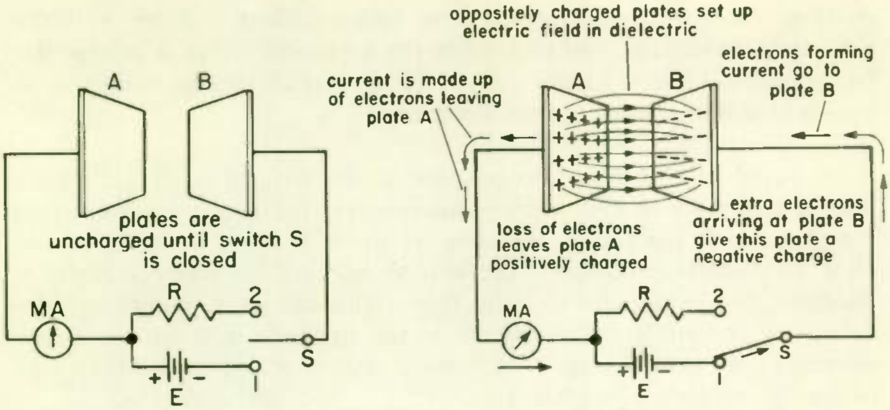

(a) Uncharged

(b) Charging

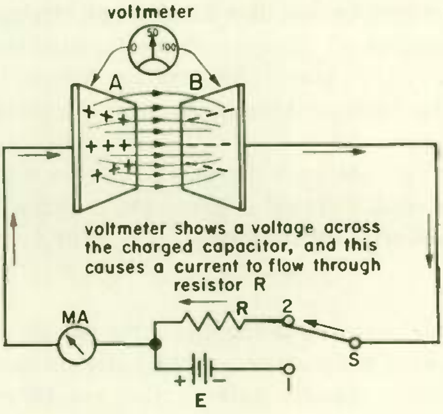

(c) Discharging

Fig. 38 The charge and discharge of a capacitor.

The battery acts as an electron pump, pulling some of the electrons off plate *A*, pushing them through the milliammeter and the battery, and finally depositing them on plate *B*. Notice that electrons cannot flow from plate *B* to plate *A* because of the insulating layer of air.

The surge of electrons from plate *A* to plate *B* is indicated by a momentary deflection of the milliammeter needle. Because of the dielectric between the plates, air in this case, the circuit is not a complete loop when the switch is closed. Hence, there can be no continuous flow of electrons, and the plates remain with an excess of electrons on plate *B* and a deficiency of electrons on plate *A*.

The capacitor is now said to be *charged*. That is, we now have two charged plates with no electron flow between them. Plate *A* has a deficiency of electrons, and plate *B* carries an excess. Also, a voltage has built up across the capacitor. This voltage has a polarity such that it opposes the flow of current from the battery.

If the switch is now closed to position 2, the battery is replaced by a resistor as shown in Fig. 38(c). This removes the battery voltage from the plates, and the excess electrons on plate *B* are able to return to plate *A* through the resistor. The voltage between the charged plates is the force that causes this electron flow. This causes a momentary deflection of the milliammeter needle in the opposite direction as excess electrons from plate *B* surge back through resistor *R* and the milliammeter to deposit themselves on plate *A*.

After the current surge ceases, the number of electrons on each plate is equal to the number of protons on that plate, so that there is no longer a charge on either plate. The voltage across the plates is once again zero, as in Fig. 38(a), and the capacitor is therefore *discharged*.

The fact that you can obtain a current flow from a capacitor after the charging voltage is disconnected proves that a capacitor stores energy. This energy is *not* stored on the plates; it is stored in the electric field of the dielectric.

Although the energy is stored in the dielectric, the charge itself is stored on the inner surfaces of the plates or on the outer surfaces of the dielectric. Since the charges are of opposite polarity, they are drawn as close together as they can get. They can't pass through the dielectric, but they can rest on its outer surfaces.

WHAT HAVE YOU LEARNED?

1. When the capacitor of Fig. 38 is charging, electrons move from plate *A* to plate *B*. At the same time, protons *(do) (do not)* move from plate *B* to plate *A*.

2. The greater the number of excess electrons on a plate of a capacitor, the greater the charge will be. You could make two modifications to the simple capacitor arrangement of Fig. 38 to increase the charge. You could (a) _______ the battery supply voltage and (b) _______ the area of the plates.

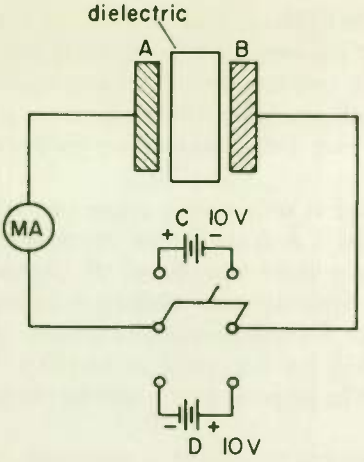

Fig. 39

3. A capacitor is basically an energy- (a)_____________ device. When charge is being built up on the plates, an electric field is being built up in the (b)_____________. When charge on the plates diminishes, the electric field (c)_____________.

4. In Fig. 39, when battery *C* is connected in the circuit, a charge is stored in the capacitor. What happens when battery *D* is then switched into the circuit?

5. If the switch in Fig. 39 is closed so as to connect battery *C* to the capacitor and then opened a while later, what will be the voltage across the capacitor?

ANSWERS

1. Do not . . . Only the electrons move.
2. (a) Increase . . . Increasing the battery voltage would supply a greater force to move more electrons.
(b) Increase . . . The increase in area of the plates would increase the number of electrons available for transfer from one plate to the other.
3. (a) Storing; (b) dielectric; (c) collapses
4. Connecting battery *C* to the capacitor has caused an excess of electrons to collect on plate *B*. Connecting battery *D* into the circuit disconnects battery *C* and applies a voltage of opposite polarity to the capacitor, thereby causing a momentary current from plate *B* to plate *A* until the capacitor is recharged. But plate *A* now carries the excess of electrons. In short, when *D* is connected, the capacitor discharges and then charges again to opposite polarity.
5. 10 V . . . The capacitor will continue to charge when the switch is closed until the voltage across the capacitor equals the charging voltage.

15 AMOUNT OF CHARGE...You learned in a preceding lesson that charge is measured in *coulombs*. A coulomb is merely a measure of the *quantity* of charge. In one coulomb there are 6,240,000,000 billion electrons. So when we talk about the charge on a capacitor in coulombs, we are saying how many excess electrons are on the negative plate.

One coulomb of charge is sufficient to cause one ampere to flow for one second. If a current of 2 A flows into a previously uncharged capacitor for 5 s, the capacitor will have a charge of 10 coulombs. A capacitor with a charge of 10 coulombs can deliver a current of 2 A to a load connected across it for 5 s before it is discharged. Alternatively, it could deliver a current of 5 A for 2 s, or $\frac{1}{2}$ A for 20 s. Charge in coulombs is equal to the current in amperes multiplied by the time in seconds.

By using a higher voltage to charge a capacitor, you force a stronger charging current to flow during the charging time. Thus, the higher the voltage used for the purpose, the greater the charge that can be put on the capacitor plates. The charge that any given capacitor will take is proportional to the voltage used to charge it. Double the voltage and you double the charge.

The purpose of this discussion of charge is to give you a background for understanding the meaning of capacitance, which is the subject of the next topic.

16 CAPACITANCE...*Capacitance* (also but less correctly called *capacity*) is a measure of the ability of a capacitor to store a charge. Capacitance is represented by the letter *C*. We have seen that one way to get a bigger charge on a capacitor is to use a higher charging voltage. Another way is to increase the size of the plates. If the size of the plates is doubled, the same charging voltage will put twice the charge into the capacitor. We say that the capacitor now has twice the capacitance that it formerly had, because it will take on twice the charge at the same charging voltage.

Capacitance is measured in a unit called the *farad*. Since few practical capacitors have a capacitance greater than a small fraction of a farad, two smaller units are commonly used. The microfarad (μF) is equal to 1/1,000,000 farad, and the picofarad (pF) is equal to 1/1,000,000 microfarad. The picofarad was formerly called the micromicrofarad ($\mu\mu$f), and you will find that unit used in some of the literature on electronics.

The amount of charge Q stored on a capacitor depends on the capacitance C and the applied voltage E. The equation for the charge stored on a capacitor is

$$Q = CE \tag{7}$$

where Q = charge, in coulombs
C = capacitance, in farads
E = applied voltage, in volts

We can rewrite this formula to find the capacitance C or the applied voltage E:

$$C = \frac{Q}{E} \tag{8}$$

$$E = \frac{Q}{C} \tag{9}$$

Figure 40 gives you an easy way to reproduce formulas (7) to (9). Simply place a finger over the quantity you want and the remaining quantities, in the indicated relationship, are the equivalent. Verify this for each of Q, C, and E.

Fig. 40 **Scheme for producing formulas for charge, capacitance, and applied voltage.**

EXAMPLE 1 . . . When 120 V d-c is applied across a 40-μF capacitor, the charge on the capacitor plates is__________coulombs.

SOLUTION . . . $Q = CE = 0.000040 \times 120 = 0.0048$ coulomb, *ans.*

EXPLANATION . . . The formula requires that C be in farads. To change microfarads to farads, move the decimal point six places to the left.

To get a better understanding of how Q, C, and E are related in a capaci-

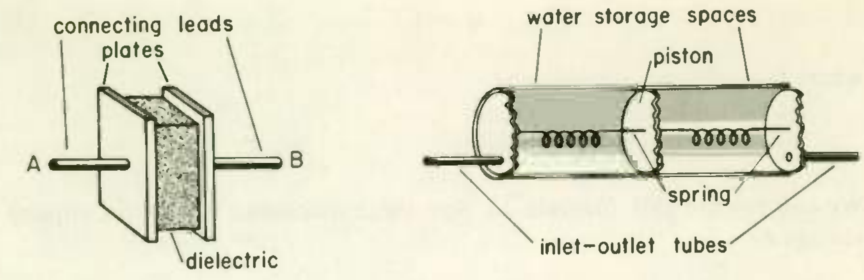

(a) Capacitor

(b) Cutaway view of cylinder fitted with piston and springs

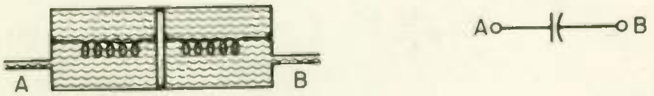

(c) No pressure difference between A and B. Piston is at center position. No difference in quantity of water molecules between right and left sides.

(d) No potential difference between A and B. No difference in quantity of electrons between right and left sides.

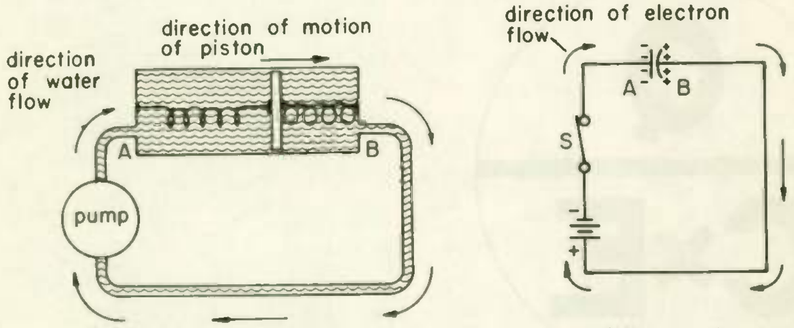

(e) When pump is turned on, water is forced into left side of cylinder and compresses spring

(f) When S is closed, electrons are forced onto left plate and charge the capacitor.

Fig. 41 Comparison of a capacitor with a cylinder, piston, and spring.

tor, we can compare a capacitor [Fig. 41(a)] with a cylinder [Fig. 41(b)] that has a movable piston supported in the center of the cylinder by springs. In Fig. 41(c) we see that the normal position of the piston is in the center of the cylinder when there is no pressure difference between the two pipes that feed water in and out of the cylinder. In this case, if the cylinder is filled with water but no water pressure is applied, the same number of water molecules are on each side of the piston. Likewise, when there is no potential difference between the two connecting leads *A* and *B* of the capacitor, the same number of electrons are on each plate of the capacitor. The capacitor is then uncharged; see Fig. 41(d).

In Fig. 41(e) we have a pump connected to the water cylinder forcing water into the left side of the cylinder. The force exerted by the pump causes the piston to move toward the right and thereby push water out of the right side of the cylinder and compress the spring. Thus there is an excess of water molecules on the left side and a deficiency on the right side. Likewise, when the switch in Fig. 41(f) is closed, connecting the battery to the capacitor, electrons are forced onto the left plate. Since like charges repel, the electrons on the left plate exert a force on the electrons on the right plate, pushing them off the plate. Hence, there is an excess of electrons on the left plate and a deficiency on the right plate.

The pump in Fig. 41(e) can continue to force water into the cylinder only until the spring is so tightly compressed that the force of the spring is equal to the force of the pump. So we see that the amount of water that can be forced into the cylinder is proportional to the force exerted by the pump. The higher the force of the pump, the more water that can be pushed into the cylinder before the spring force is high enough to oppose any further compression. Likewise, the amount of electrons that can be forced onto the left plate of the capacitor is proportional to the voltage of the battery. The higher the battery voltage, the more electrons that can be forced onto the left plate before the force opposing the flow of electrons gets high enough to oppose any further increase of charge. The force that opposes any further increase of charge on the capacitor is the voltage that is built up across the capacitor and is due to the presence of charge on the plates. So, the higher the battery voltage, the higher the charge needed on the plates to balance out the battery voltage exactly.

There is one other thing that determines how much water can be forced into the left side of the cylinder, and that is the volume of the cylinder. The larger the diameter of the cylinder, the greater the volume, so the more water that can be stored in the left side of the cylinder. So we see that the *quantity* of water molecules that can be forced into the cylinder is directly proportional to the volume of the container. Or, to put it another way, the quantity Q of water stored is proportional to the *capacity* C of the cylinder to hold water. In the capacitor we have a similar situation. The amount of electrons that can be stored on the left plate is proportional to the capacitance of the capacitor. The larger the plates, the higher the capacity to store charge.

We can now see the relations of the factors that determine how much water can be stored in the cylinder or how much charge can be stored in a

capacitor. We have previously stated the formula $Q = CE$. The formula can be used for the water in the cylinder if we let
Q = quantity of water molecules
C = capacity of the container to hold water (volume)
E = force of the pump.

In the capacitor we have a similar situation where
Q = quantity of charge
C = capacity of the capacitor to store charge
E = battery voltage

Notice that if the pump were reversed, the direction of water flow in Fig. 41(e) would be opposite to the direction shown. Thus the right side of the cylinder would fill with water, thereby pushing the piston toward the left and forcing water out of the left side. Likewise, if the battery connections were reversed in Fig. 41(f), electrons would flow from the battery onto the right plate of the capacitor, thus exerting a force of repulsion on the electrons on the left plate and pushing them off. The capacitor would then charge up in the opposite direction, with the right plate negative and the left plate positive.

So, just as the cylinder can be charged with water in either direction, so most capacitors can be charged with either plate negative with respect to the other. Some capacitors, however, can be charged in only one direction, or to one polarity. These are called *polarized* capacitors, and they will be discussed later.

If the pump in Fig. 41(e) regularly reverses pumping direction at a rapid rate, there will be continuous water flow in the pipe, first in one direction and then in the other. If the pump does not reverse, water flow is only temporary, stopping when the spring pressure balances pump pressure. Similarly, if alternating current (a current that regularly changes direction at a rapid rate) is applied to a capacitor, a continuous current flows through the circuit. If direct current (a current that does not change its direction) is applied to a capacitor, current flow is only momentary, stopping when the voltage of the stored charge balances the voltage used in charging the capacitor.

WHAT HAVE YOU LEARNED?

1. What is the voltage across a 0.005-μF capacitor if the charge on the capacitor is 0.000,000,045 coulomb? ______ volts.

2. What size capacitor would you need to store a charge of 0.003 coulomb with a voltage of 100 V across the capacitor? ______ microfarads.

3. You have a 2-μF capacitor charged so that the voltage across the capacitor is 30 V. If you remove half of the charge on the capacitor, the voltage across it will be ______ volts.

4. You connect a 100-μF capacitor to a circuit that charges the capacitor with a constant current of 0.2 A for 0.03 s. What is the voltage across the capacitor at the end of the charge time?

ANSWERS

1. 9 ... From the formula $E = Q/C$ we see that $E = 0.000{,}000{,}045/0.000{,}000{,}005 = 9$ V.
2. 30 ... $C = Q/E = 0.003/100 = 0.000{,}03$ farad $= 30\,\mu$F.
3. 15 ... Voltage is directly proportional to the charge. If you cut the charge in half, you cut the voltage in half.
4. 60V ... First you must find the total charge on the capacitor. The charge Q is equal to the product of the current, in amperes, and the time, in seconds, or $Q = I \times T$. Then $Q = 0.2\text{A} \times 0.03\text{s} = 0.006$ coulomb. Then, using the formula $E = Q/C$, find that the voltage across the capacitor is

$$E = \frac{0.006 \text{ coulomb}}{0.0001 \text{ farad}} = 60 \text{ V}$$

LESSON 2511-1

INDUCTANCE AND CAPACITANCE

EXAMINATION

Circle the number of the correct answer for each question that follows. When you are finished, transfer the answers to the answer sheet by putting X's in the proper squares. When the graded answer sheet is returned to you, correct in this book any questions you may have missed. By doing so, you will have a record of the correct answers to all questions for review purposes.

✓ 1. Reluctance is defined as
   - [✓ (1)] the opposition offered to the flow of magnetic flux (lines of force).
   - (2) the ease with which flux flows through a magnetic material.
   - (3) the inability of a magnet to accept an electric field.
   - (4) the difficulty of forming magnets into suitable shapes.

2. Permeability is
   (1) the forming quality of a magnetic material.
   ~~(2)~~ the ability of a magnetic material to retain its force.
   ✓ [✓ (3) the ability of a material to conduct magnetic lines of force as compared to the ability of air.]
   (4) the distance magnetic lines of force must travel through a cross section of a unit of standard metal.

3. The higher the permeability, the greater the amount of
   ✓ [✓ (1) flux.]
   ~~(2)~~ magnetomotive force.
   ~~(3)~~ magnetic material.
   ~~(4)~~ reluctance.

4. Residual magnetism
   ✓ (1) is the combined magnetism of several electromagnets after they are subjected to heat.
   [✓ (2) is the magnetic strength remaining in a magnetic material after removal of the magnetizing force.]
   (3) is the magnetism of a body under the influence of ampere-turns.
   (4) is the amount of magnetism in a body because of its molecular structure.

5. The amplitude of the emf induced in a coil that is threaded by magnetic lines of force is *not* affected by which one of the following factors? ✓
   (1) The strength of the magnetic field
   (2) The rate of change of flux
   [✓ (3) The diameter of the conductor]
   (4) The number of turns in the coil

6. How is a compass affected when it is placed in the center of a coil carrying an electric current?
   (1) North pole of compass points to south pole of coil.
   ✓ (2) It is shielded by the coil and therefore does not give any distinct reading.
   [✓ (3) North pole of compass points to north pole of coil.]
   (4) Compass needle turns to a right angle to the axes of the coil.

7. Inductance may be defined as
   (1) the ability of a circuit or coil to maintain a constant voltage across the load.
   ✓ [✓ (2) the property of a coil that opposes any change in current strength.]
   (3) the ability of a coil to generate an emf that aids the applied voltage.
   (4) the ability of a circuit to stabilize variations in reluctance.

✓ 8. The unit of inductance is the
(1) farad. (2) maxwell. (3) gilbert. [✓ (4) henry.]

9. What is the relationship between the number of turns and the inductance of a coil?
✓ ~~(1)~~ The inductance is directly proportional to the number of turns.
[✓ (2)] The inductance is proportional to the square of the number of turns.
(3) The number of turns does not affect the inductance.
(4) The inductance depends more on the shape of the turns than on number.

10. When the current through an inductor is caused to vary in amplitude,
(1) the resistance of the inductance increases.
(2) the inductance will heat.
✓ (3) the inductance decreases in value.
[✓ (4)] a voltage is developed.
(5) the inductance increases in value.
(6) interference may result.
(7) harmonics are formed.
(8) oscillations will start.

11. The term "ampere-turn" is
✓ (1) the same as gilbert.
~~(2)~~ a unit of electrostatics.
(3) a measure of permeability.
[✓ (4)] a unit for measuring the mmf.

400.
1.26 | 504 00.
504

✓ 12. An electromagnet has 400 turns. To provide 504 gilberts, the current must be adjusted to
(1) 0.05 A. (2) 0.1 A. (3) 0.5 A. [✓ (4)] 1.0 A.

200
1.26 | 252

✓ 13. You are required to wind a coil to produce 252 gilberts when the current is 0.5 A. The number of turns on the coil will be
(1) 20. (2) 200. [✓ (3)] 400. (4) 1000.

14. Adding an iron core to an air-core inductance
✓ (1) increases the inductance of the coil.
✓ (2) fills the space and thus prevents heat dissipation.
[✓ (3)] makes the center of the coil useful as an electric field.
~~(4)~~ increases reluctance of the magnetic path and thereby increases the number of maxwells.

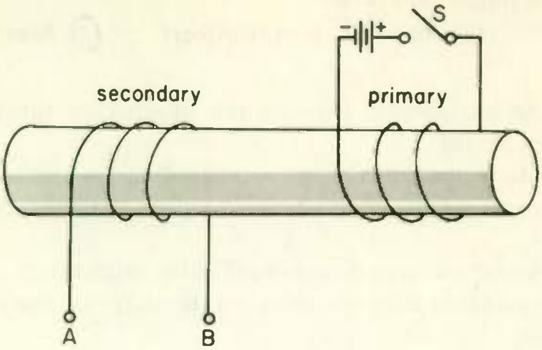

Fig. 42

15. One factor that influences the direction of the lines of force generated by an electromagnet is the
    - ✓ (1) polarity of residual magnetism in the core material.
    - (2) permeability of the magnetic material.
    - [✓ (3)] direction of current flow through the windings.
    - (4) cross-sectional area of the core.

16. Figure 42 shows two coils wound on an iron bar. When switch *S* is closed, a voltage will be induced in the secondary with
    - (1) terminal *A* positive with respect to *B*.
    - ✓ [✓ (2)] terminal *B* positive with respect to *A*.
    - (3) terminal *A* either positive or negative with respect to *B*, but it is impossible to tell which.

17. After the switch in Fig. 42 has been closed for a long time, the voltage across the secondary will be
    - (1) constant with terminal *A* positive with respect to *B*.
    - ✓ (2) constant with terminal *B* positive with respect to *A*.
    - (3) zero, because there is no flux threading the secondary.
    - [✓ (4)] zero, because the flux threading the secondary is not changing.

18. Two identical coils are passing through different magnetic fields so that the flux threading each coil is increasing. The flux threading coil *A* changes from 3000 lines to 4000 lines in 2 microseconds. The flux threading coil *B* changes from 200,000 lines to 250,000 lines in 100 microseconds. Which coil will have a higher value of induced voltage?
    - (1) Coil *A*
    - ✓ (2) Coil *B*
    - [✓ (3)] Neither, both will have the same induced voltage.
    - (4) Either *A* or *B* depending upon which is moving faster.

✓ 19. The unit of capacitance is the
(1) henry. (2) μ. [✓ (3)] farad. (4) maxwell.

✓ 20. The charge in a capacitor is stored
(1) in the plates.
(2) in the dielectric.
(3) on the outer surfaces of the plates.
[✓ (4)] on the inner surfaces of the plates (which is the same as the outer surfaces of the dielectric).

✓ 21. The formula for determining the quantity of charge of a capacitor is
[✓ (1)] $Q = CE$ (2) $Q = \frac{F_1 F_2}{3D}$ (3) $C = LI$ (4) $Q = RS$

End of Exam

1000 X 10 10000

100

~~10~~ 20000

20 00~~0000000~~ .000002

50

~~10~~ 50.0,000

10,000~~000~~ .0001

Notes

Notes


CLEVELAND INSTITUTE OF ELECTRONICS

CLEVELAND INSTITUTE OF ELECTRONICS / CLEVELAND, OHIO

electronics

CLEVELAND INSTITUTE OF ELECTRONICS / CLEVELAND, OHIO

Applied Magnetism and Practical Capacitors

2512-1

An AUTO-PROGRAMMED® Lesson

ABOUT THE AUTHOR

Jerome E. Oleksy has seen rapid advancement during his career in electronics. He started his electronics career in the U.S. Navy, where he made Radarman First Class during his four year hitch. Out of the Navy Mr. Oleksy worked for several years in TV servicing and as an electronics technician before being promoted to Project Engineer for the Rand Development Corporation. As an engineer for Rand he has done extensive design work on pulse circuitry for a wide variety of different applications.

Although currently a physics major at John Carroll University, Mr. Oleksy received most of his extensive education in electronics through home study. He is thus well able to understand the problems of the home-study student. In his work as a Project Director for CIE, he edits and writes lesson material that eliminates the many stumbling blocks that he himself met as a home-study student.

This is an AUTO-PROGRAMMED Lesson exclusive with the Cleveland Institute of Electronics. It is your assurance of the finest in technical education and training.

*Registered Trademark

Accredited by the Accrediting Commission
of the National Home Study Council

The Accrediting Commission has been approved by the U S Office of Education as a "nationally recognized accrediting agency".

CLEVELAND INSTITUTE OF ELECTRONICS

Applied Magnetism and Practical Capacitors

By JEROME E. OLEKSY
Project Director
Cleveland Institute of Electronics

2512-1

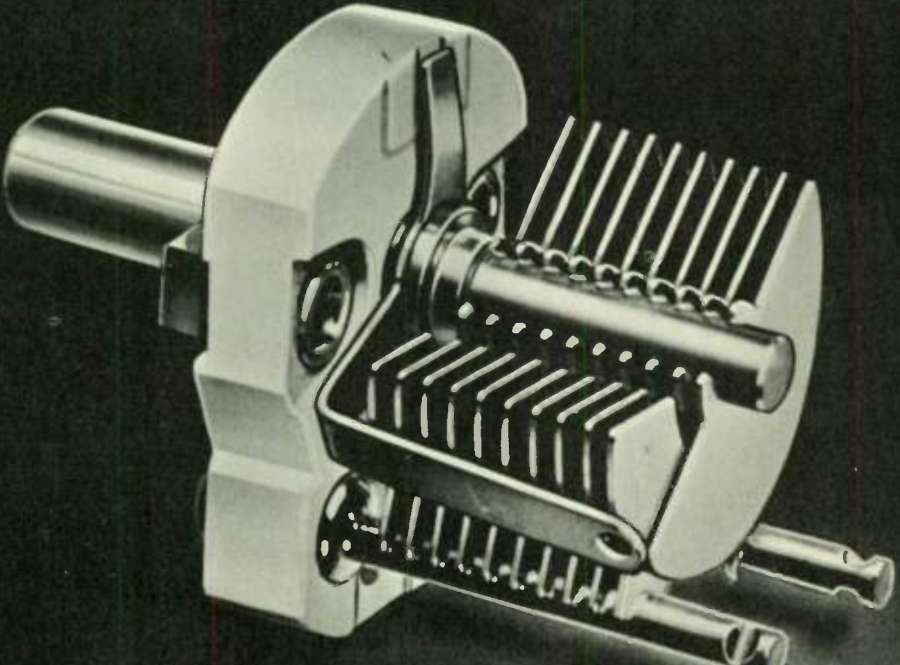

In this lesson you will learn...

FRONTISPIECE: *A variable capacitor with air dielectric and ceramic insulation.*
Photo: Courtesy, E. F. Johnson Company.

THIRD EDITION/Second Revised Printing/November, 1967.

A chat with your instructor

In preceding lessons you have learned the basic operating principles of inductors, capacitors, and transformers. In this lesson these principles will be developed further and particular attention will be given to the characteristics of practical circuit components. For example, you will learn how to select a suitable capacitor for a required application.

Previous discussion of inductors and capacitors related to their behavior in d-c circuits. In this lesson more attention will be given to a-c circuit operation. One of the most important applications of inductance in a-c circuits is in transformers. This lesson will show you how inductance determines transformer operation and how inductance and capacitance set upper and lower frequency limits beyond which a transformer will not operate satisfactorily.

Applied Magnetism and Practical Capacitors

USING CAPACITORS

1 FACTORS AFFECTING CAPACITANCE . . . Just as the inductance of an inductor depends on the physical characteristics of the inductor, so the capacitance of a capacitor depends on the physical characteristics of the capacitor. These characteristics are plate area, plate separation, number of plates, and the nature of the dielectric material. We will now discuss how the dielectric material affects capacitance.

For a given charge on a capacitor the voltage across the capacitor can be

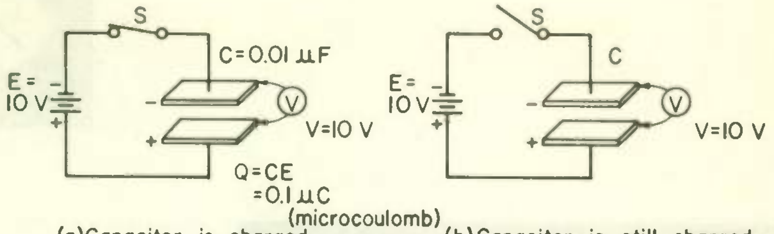

(a)Capacitor is charged to 10 V when S is closed

(b)Capacitor is still charged to 10 V after switch is open

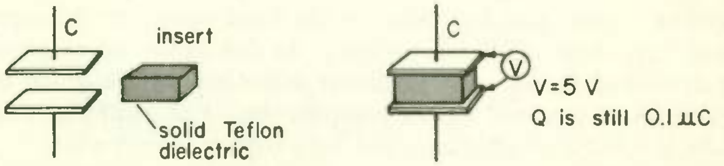

(c) Solid dielectric is inserted between charged capacitor plates

(d) Q remains the same, but voltage across C decreases to 5 V

Fig. 1 How inserting a solid dielectric affects the voltage across a capacitor when the charge remains constant.

changed by changing the dielectric material between the plates. Suppose we take a capacitor with an air dielectric whose capacitance is 0.01 μF (microfarad) and charge it with a battery to 10-V, as shown in Fig. 1(a). We can compute the charge on the capacitor to be $Q = CE = 0.01 \times 10^{-6} \times 10 = 0.1 \times 10^{-6}$ coulomb = 0.1 (microcoulomb).

Now let's disconnect the battery. The capacitor will still have the same charge on it; see Fig. 1(b). Suppose we insert Teflon between the plates as shown in Fig. 1(c). The Teflon weakens the electric field between the two plates. The voltage across the plates depends on the strength of the electric field, so that weakening of the field means that the voltage across the plates goes down. This is shown in Fig. 1(d).

Although the voltage across the plates decreases, there is no complete path for electrons to flow through, so the same number of electrons must still be on the negative plate. Or in other words, the *amount of charge* on the capacitor is still the same. We can see from the relationship $Q = CE$ that if Q remains constant and E decreases, C must increase. So, by putting in the Teflon dielectric, we have doubled the capacitance. Looking at this another way, if we want to increase the voltage across the plates to 10 V again, we must double the charge on the plates. What all this means is that a capacitor with a dielectric material different than air will hold *more* charge for the same voltage across the plates. This is just another way of saying that the capacitance has increased.

The relative ability (compared to air) of a dielectric to increase capacitance is called the *dielectric constant*. Thus Teflon has a dielectric constant of 2 because replacing the air dielectric with Teflon dielectric doubles the capacitance. Air—or more accurately, vacuum—is arbitrarily assigned a dielectric constant of 1.0. All solids substances and liquids have dielectric constants greater than 1.0. This means that replacing an air dielectric with a solid dielectric will always increase the capacitance. For practical purposes, the dielectric constant of all gases can be considered as the same as that of vacuum, or 1.0.

The dielectric constants of some important dielectrics are given in Table 1. The table shows that if the space between capacitor plates is filled with mica, for example, the capacitor will have 5.5 times as much capacitance as the same capacitor with air between the plates.

TABLE 1

Material	Dielectric Constant K
Vacuum	1.0
Air or other gas	1.0
Distilled water	80
Paraffined paper	2.2
Mica	5.5 to 7.0
Porcelain	5.5
Tantalum	27
Pyranol oil	4.5
Silicone oil	2.8
Teflon	2.0
Ceramics	5.0 to over 1000

2 FORMULA FOR CAPACITANCE . . . A parallel-plate capacitor composed of two plates separated by the thickness t of the dielectric material is shown in Fig. 2. The formula (which need not be memorized) for finding the capacitance of the capacitor is

$$C = \frac{0.225\,KA(n-1)}{t}$$

where C = capacitance, in picofarads
K = dielectric constant of material
A = area of plates in square inches

(cont'd)

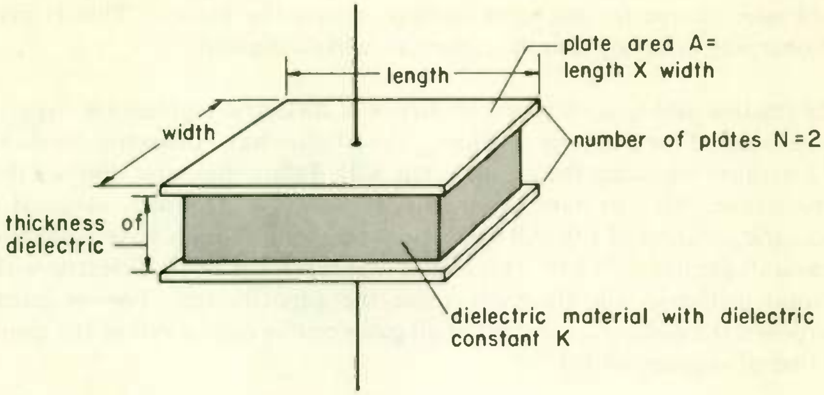

$$C = \frac{22.5\,KA(n-1)}{100\,t} \text{ picofarads}$$

Fig. 2 Factors that determine capacitance.

t = thickness of dielectric, in inches
0.225 = constant to make the value of C come out in picofarads when the thickness of the dielectric is given in inches
n = number of plates (Two plates are needed to make one capacitor.)

The formula shows that the capacitance is directly proportional to the plate area and to the dielectric constant but inversely proportional to the thickness of the dielectric. "Thickness of the dielectric" has the same meaning as "separation of the plates." If the dielectric constant of the material between the plates is doubled, the capacitance is doubled. If the plate area is doubled, the capacitance is doubled. But if the separation between the plates is doubled, the capacitance is cut in half.

WHAT HAVE YOU LEARNED?

1. The frontispiece of this lesson shows a variable capacitor used as a tuning capacitor in radio receivers. When the shaft is rotated so that the plates are fully meshed, maximum plate area exists for each capacitor section. When this is the case, the capacitance of the capacitor is *(maximum)(minimum).*

2. The dielectric of the frontispiece capacitor is (a) ________. The dielectric constant of this material is (b) ________.

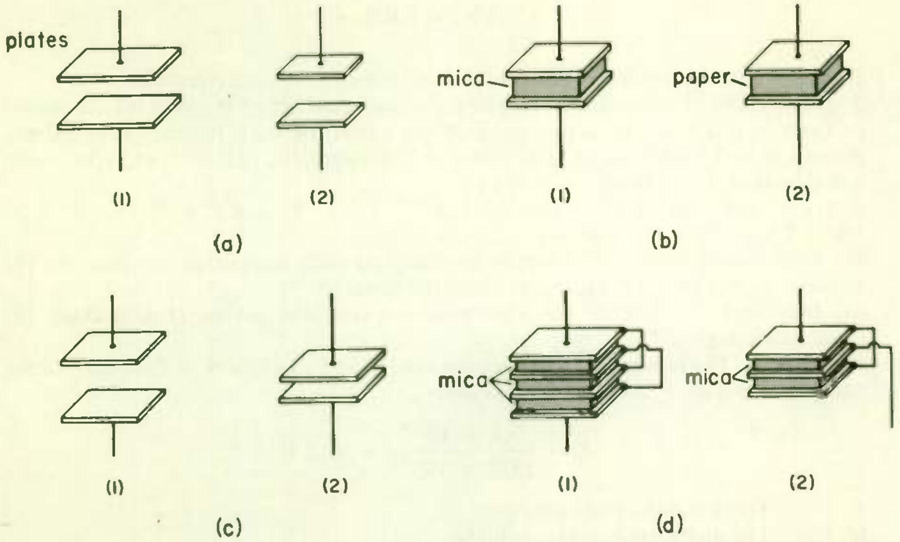

Fig. 3

3. Assume the fully meshed capacitance of the frontispiece capacitor to be 350 pF (picofarads). Suppose the capacitor, with plates fully meshed, is placed in an empty coffee cup and that the cup is then filled with Pyranol oil. The capacitance of the capacitor is now ________ picofarads.

4. Suppose when the capacitor of Problem 3 is out of the cup—in air—a 100-V battery is connected across the capacitor with the plates fully meshed. The charge on the capacitor can be found by the formula Q = (a) ____________. The amount of charge is (b) ____________ coulombs. Now suppose you disconnect the battery. Also, suppose that no charge leaks off the capacitor through the air. When the charged capacitor is immersed in the cup of Pyranol oil, the amount of charge on the capacitor will (c) *(increase)(decrease)(remain the same)*. Since its capacitance has (d) *(increased)(decreased)(remained the same)*, the voltage across the capacitor will be (e) ________ volts.

5. Which capacitor of Fig. 3(a) has a higher capacitance? ________.

6. Which capacitor of Fig. 3(b) has a higher capacitance? ________.

7. Which capacitor of Fig. 3(c) has a higher capacitance? ________.

8. Which capacitor of Fig. 3(d) has a higher capacitance? ________.

ANSWERS

1. Maximum . . . Increasing the plate area increases the capacitance.
2. (a) Air; (b) 1   3. 1575 . . . The dielectric constant of Pyranol oil, as shown in Table 1, is 4.5, so the capacitance of the capacitor with Pyranol between the plates will be 4.5 times as great as when air is between the plates. The capacitance will then be 4.5 × 350 pF = 1575 pF.
4. (a) $C \times E$, or CE (b) 3.5×10^{-8} . . . $Q = CE = 350 \times 10^{-12} \times 100 = 3.5 \times 10^{-8}$ (coulombs).
(c) Remains the same . . . There is no complete path for current to flow, so the number of charges on the plates remains the same.
(d) Increased . . . The oil fills the space between the plates, thus making the capacitance higher.
(e) 22.2 . . . The new value of capacitance is 1575 pF, as found in Problem 3. So, using the formula $E = Q/C$, we find that

$$E = \frac{3.5 \times 10^{-8}}{1575 \times 10^{-12}} = 22.2\ \text{V}$$

5. 1 . . . There is more plate area.
6. 1 . . . The dielectric constant is higher.
7. 2 . . . The plates are closer together.
8. 1 . . . There are more plates and hence there is more plate area.

3 VOLTAGE INCREASE ACROSS A CAPACITOR . . . You will remember that, when a switch is closed, the current through an inductor rises slowly to its final steady value. There is a similar situation in a capacitor, except that it is the *voltage across* the capacitor that rises slowly to its final value. The difference between the voltage rise across a resistor and the voltage rise across a capacitor is shown in Fig. 4. As soon as switch S in Fig. 4(a) is closed, the full battery voltage appears across the resistor, as shown in Fig. 4(b).

In Fig. 4(c) we have a capacitor connected to a battery through a resistor and a switch. Now when the switch is closed, the voltage across the capacitor is not equal to the battery voltage, but it rises slowly to its final value as shown in Fig. 4(d). The reason for this is that the voltage across a capacitor is proportional to the amount of charge on the plates. For a given size capacitor, the more charge on the plates, the higher the voltage across it. Since it takes some time for a quantity of electrons to flow from the negative terminal of the battery to one of the capacitor plates, the voltage across the capacitor takes some time to reach the battery voltage.

In Fig. 4(c) a resistor R_1 is shown in series with the battery. As you know, resistors offer opposition to the flow of electrons. So, the higher the value of series resistor, the longer it will take for the same quantity of electrons

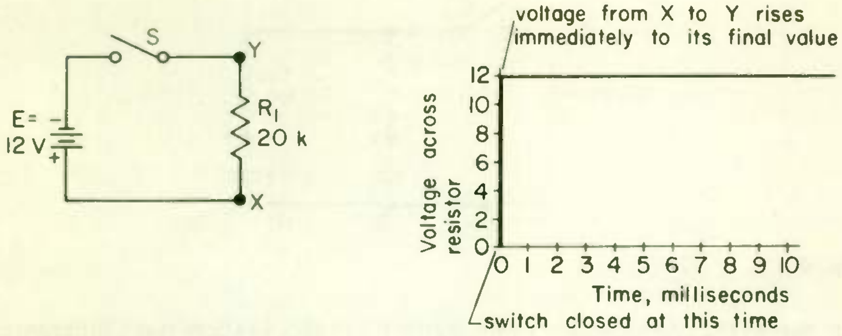

(a) Pure resistive circuit

(b) Graph of voltage vs. time in resistive circuit

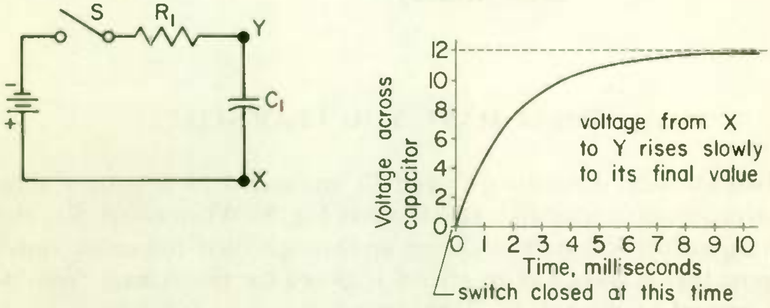

(c) Circuit with capacitor

(d) Graph of voltage vs. time in capacitive circuit

Fig. 4 Comparison of voltage rise in resistive and capacitive circuits.

to flow from the battery to the capacitor plate. In fact, it is precisely because the resistor is present that the voltage across the capacitor builds up slowly. If there were zero resistance, the capacitor would charge up immediately.

In every practical circuit, of course, there is always some resistance in series with the capacitor. Even the wires connecting the capacitor to the battery have some resistance. Also, every battery or other power supply has some internal resistance. This internal resistance will limit the rate at which electrons can flow to the capacitor. The important point to remember is that the voltage across the capacitor depends on the quantity of charge (number of electrons) on the plates.

The longer it takes to build up the charge on the plates, the longer it will take for the voltage across the capacitor to reach its final value. When the voltage across the capacitor finally reaches the battery voltage, no more charging current flows into the capacitor. That is because the volt-

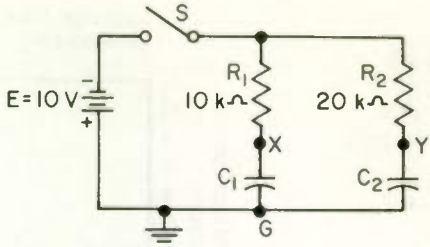

Fig. 5

age across the capacitor bucks the battery voltage, so there is no difference of potential across the series resistor and hence no current flow through it.

WHAT HAVE YOU LEARNED?

1. Two identical capacitors C_1 and C_2 connected to a battery through different values of resistance are shown in Fig. 5. When switch S is closed, both capacitors will start to charge up through their respective resistors. Suppose that it takes 5 msec after S is closed for the voltage from point X to ground to reach 6 V. How long will it take for the voltage from point Y to ground to reach 6 V? ______ milliseconds.

2. Now suppose that both capacitors in Fig. 5 are initially uncharged. Switch S is then closed for exactly 5 msec and suddenly opened. Will there now be any current flow through R_1 and R_2? Why?

3. In Fig. 4(c) 0.5 msec after switch S is closed, the voltage across C_1 is about 2.7 V, as shown on the graph of Fig. 4(d). At this instant the voltage across R_1 is (a) ______ volts. Exactly 2 msec after the switch is closed, the voltage across the capacitor is about 7.6 V. At this instant the voltage across R_1 is (b) ______ volts.

ANSWERS

1. 10 . . . Capacitor C_2 is being charged through a resistor that is twice as large as R_1, so it takes twice as long for the same amount of charge to flow into C_2. Hence it takes twice as long for the voltage to reach 6 V.
2. Yes . . . Figure 6 shows the equivalent circuit of the two capacitors and resistors after the switch is opened. Voltmeter V_1 shows that the voltage across C_1 is 6 V. However, as shown on V_2, the voltage across C_2 is less than 6 V, so point X is more negative than point Y. Resistors R_1 and R_2 are essentially in series if we travel from point X to point Y, so electrons will flow from the negative

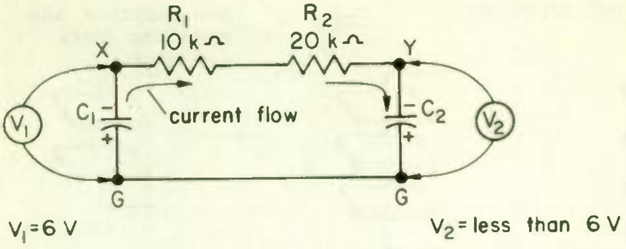

Fig. 6

plate of C_1, through R_1, through R_2, and onto the negative plate of C_2. The current will continue to flow until the voltage across C_2 is exactly equal to the voltage across C_1. That is, the voltage across C_1 will decrease while the voltage across C_2 is increasing. When the two voltages V_1 and V_2 are exactly equal, current will stop flowing.

3. (a) 9.3 . . . Resistor R_1 is in series with C_1, so the voltage drop across C_1 plus the voltage drop across R_1 must equal the battery voltage. Since the voltage across C_1 is 2.7 V, the voltage across R_1 must be equal to the battery voltage minus the voltage across C_1, or $12 - 2.7 = 9.3$ V.

(b) 4.4 . . . By the same reasoning as in part (a), the battery voltage minus the voltage across C_1 equals the voltage across R_1. Notice that the voltage across R_1 is decreasing as the voltage across C_1 is increasing. This is always true in a series circuit containing a resistor and a capacitor when a fixed voltage is applied.

4 CAPACITORS IN SERIES AND PARALLEL . . . You have learned how to combine inductors in series and parallel. With capacitors, the combination is somewhat simpler than with inductors, because we don't have to consider anything like magnetic coupling between them. The

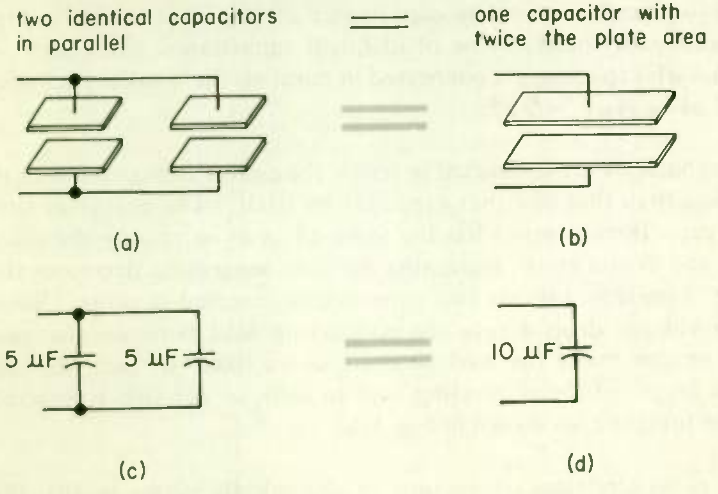

Fig. 7 Capacitors in parallel.

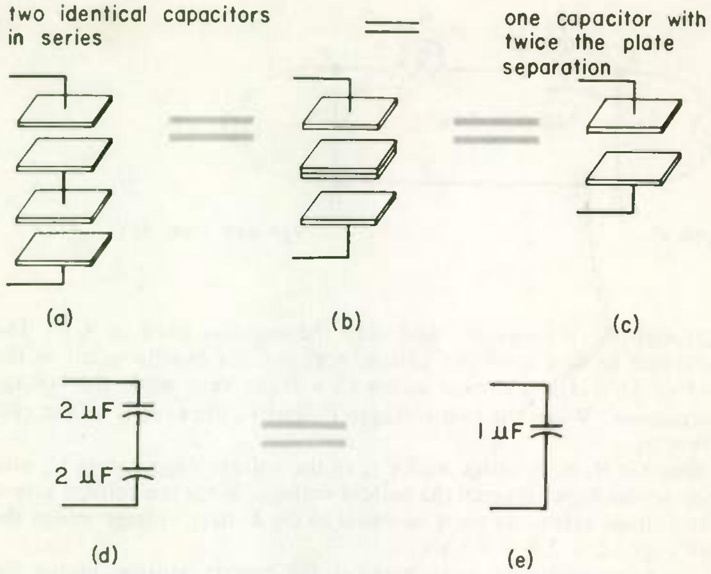

Fig. 8 Capacitors in series.

simplest combination of capacitors is two capacitors in parallel. When two capacitors are connected in parallel, as shown in Fig. 7, the total capacitance of the combination is simply the sum of the individual capacitances. The reason for this is simple. Putting capacitors in parallel is similar to increasing the plate area of the capacitor. Figure 7(a) is equivalent to Fig. 7(b). In Fig. 7(c), the two 5-μF capacitors in parallel merely add to give the equivalent capacitance of 10 μF, as shown in Fig. 7(d). The capacitors need not be of identical capacitance. If a 2-μF, a 3-μF, and a 4-μF capacitor are connected in parallel, the total capacitance is $2\,\mu F + 3\,\mu F + 4\,\mu F = 9\,\mu F$.

When two capacitors are connected in series, the equivalent capacitance of the two is less than that of either capacitor by itself. The reason is that connecting capacitors in series has the same effect as increasing the plate separation, and as you know, increasing the plate separation decreases the capacitance. Figure 8(a) shows two capacitors connected in series. Since there is no voltage drop across the connecting lead between the two capacitors, we can make the lead as short as we like. In fact, we can decrease the length of the connecting wire to zero, so the two connected plates will be touching, as shown in Fig. 8(b).

Since there is no electrical connection to the middle plates in (b), the plates have no effect on the dielectric between the two outer plates. If we remove the middle plates, the capacitance will not be changed and we will have the equivalent capacitor of (c), in which the thickness of the dielectric is twice that of either capacitor in (a). Hence, the capacitance of two equal capacitors in series is only half that of a single capacitor. The combined capacitance of two 2-μF capacitors in series is 1 μF, as shown in Fig. 8(d) and (e).

If the capacitors are not of equal value, the capacitance of the combination will still be less than that of either capacitor by itself. To find the capacitance of two or more capacitors in series, we use a formula similar to the one for finding the equivalent resistance of two or more resistors in parallel. The formula is

$$C_{eq} = \frac{1}{\frac{1}{C_1} + \frac{1}{C_2} + \text{etc.}}$$

EXAMPLE . . . Find the equivalent capacitance of a 2-μF, a 3-μF, and a 4-μF capacitor all connected in series.

SOLUTION

$$C_{eq} = \frac{1}{\frac{1}{C_1} + \frac{1}{C_2} + \frac{1}{C_3}} = \frac{1}{\frac{1}{2 \times 10^{-6}} + \frac{1}{3 \times 10^{-6}} + \frac{1}{4 \times 10^{-6}}}$$

$$= \frac{1}{5 \times 10^5 + 3.33 \times 10^5 + 2.5 \times 10^5}$$

$$= \frac{10^{-5}}{10.83} = 0.923\ \mu\text{F}, \textit{ans.}$$

Capacitors are sometimes connected in series so that they can be used across a higher voltage than that for which they were designed. The *voltage rating* of a capacitor is the maximum recommended voltage that can be continuously applied without danger of the dielectric breaking down and short-circuiting. Increasing the thickness of the dielectric increases the voltage rating, because it takes more voltage to puncture the thicker material.

If you connect two identical capacitors in series, you have twice the thickness of dielectric across which the voltage is applied (as Fig. 9 shows) and thus twice the voltage rating. Each capacitor in Fig. 9 needs to have a voltage rating of only 300 V. Similarly, if you want a capacitor to use across 1600 V but you have only identical 400-V capacitors, you can connect four of the capacitors in series for use across the 1600 V. If you connect three 250-V 12-μF capacitors in series, the capacitance is reduced to 4 μF but the voltage rating is increased to 750 V.

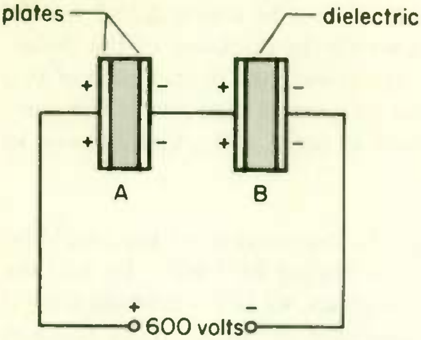

Fig. 9 Using two identical capacitors in series doubles the thickness of dielectric between the voltage terminals and so doubles the breakdown voltage.

You will remember that in a d-c circuit the sum of the voltages around the circuit is always equal to the applied voltage. That being the case, if we take a voltmeter and read the voltage across capacitor *A* in Fig. 9 and then across capacitor *B*, the sum of the two readings must be 600 V. Since the capacitors are identical, you would expect the voltages across the two capacitors to be identical, or 300 V across each. Instead, you may find that the voltage across one capacitor is higher than across the other. For example, you may read 400 V across one and only 200 V across the other. The reason for the difference in voltages is that the dielectric in a capacitor is not a perfect insulator (no material is) and hence passes a slight amount of d-c current, called the *leakage current*. The resistance of the dielectric is called the *leakage resistance*. The amount of leakage resistance is apt to be different for two supposedly identical capacitors, and it will vary with age and climatic conditions.

The voltage across individual capacitors of a series-connected group will be proportional to the leakage resistance when the capacitor group is used in a d-c circuit. As a result, the capacitors with the highest leakage resistance must carry more than their share of the total circuit voltage, which may cause them to break down. The breakdown can be prevented by shunting resistors of equal value, called *equalizing resistors*, across the series capacitors, as shown in Fig. 10. The value of each shunting resistor must be low as compared to the leakage resistance of the capacitor across which it is connected. Since the leakage resistance of a capacitor is generally extremely high, the shunting resistor can have a high resistance and still meet its requirement. Thus it does not draw an objectional amount of current from the voltage source.

Another reason for using equalizing resistors is to discharge the capacitors after the system is switched off. This will help prevent maintenance personnel from receiving a shock that could be dangerous in a high-voltage system. Equalizing resistors are never required with capacitors in series across a-c voltage sources, unless for the purpose of discharging the

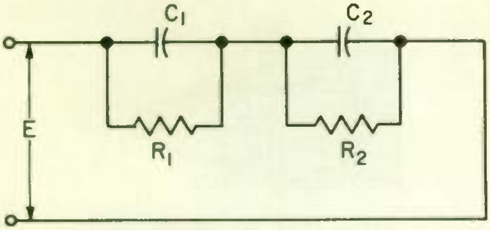

Fig. 10 Equalizing resistors connected in shunt across equal capacitors.

capacitors. Since electrolytics have a higher leakage current than other types of capacitors, they are the type most apt to need equalizing resistors when used in series.

The trouble with connecting capacitors in series so that they can be used at a higher voltage is that the capacitance is reduced. As a result, the capacitance may not be as great as is needed. This problem can be overcome by connecting in parallel as many series strings as are needed to provide the wanted capacitance. Suppose you have a number of 300-V 12-μF capacitors that you want to use across 1200V with a capacitance of at least 9 μF. Connecting four such capacitors in series will provide the needed 1200-V rating. However, when the connection is made, the capacitance of the string is reduced to $12/4 = 3$ μF. To get 9 μF, you can connect three such series strings in parallel, as shown in Fig. 11.

You will remember that the voltage across a capacitor is directly proportional to the charge on the capacitor. This gives us a simple way to determine the voltage across capacitors when a charged capacitor is connected across an uncharged capacitor. Figure 12(a) shows capacitor C_1 connected through S_1 to a 24-V battery. When C_1 becomes fully charged, we know that the charge on C_1 must be $Q = C \times E = 6 \times 10^{-6} \times 24 = 144 \times 10^{-6}$ coulombs. Now when S_1 is thrown to position 2, as shown in Fig. 12(b), capacitor C_2 is placed in parallel with C_1. Since C_2 was initially

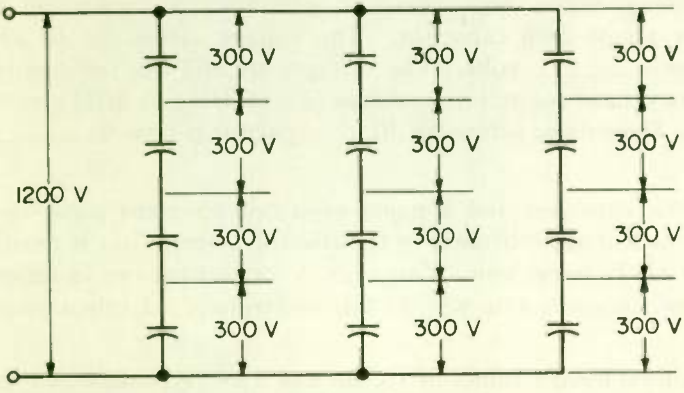

Fig. 11 Capacitors connected in series-parallel.

(a) C_1 charges up to 24 V

(b) Some of the charge on C_1 flows onto C_2 until the voltages across C_1 and C_2 are equal

Fig. 12 Charge redistributes itself on capacitors in parallel to make voltages equal.

uncharged, some of the charge on C_1 must flow onto C_2 and charge it. What will be the new voltage across C_1 and C_2 in parallel?

This problem might at first seem rather difficult, but it is really quite easy if we use the relationship $E = \frac{Q}{C}$. Looking at the two capacitors in parallel, we know that the total capacitance of the two must be $C_t = C_1 + C_2 = 6\ \mu F + 3\ \mu F = 9\ \mu F$. Now the total charge on the two capacitors will remain the same, that is 144×10^{-6} coulombs. So we find the voltage across the two in parallel to be

$$E = \frac{Q}{C_t} = \frac{144 \times 10^{-6}}{9 \times 10^{-6}} = 16\ V$$

WHAT HAVE YOU LEARNED?

1. Two capacitors are connected in series across a 300-V d-c power source. One has a leakage resistance of 15 MΩ (megohms) and a capacitance of 10 µF. The other has a leakage resistance of 20 MΩ and a capacitance of 20 µF. The voltage across the 10 µF capacitor is (a) ______ volts. To equalize the voltage across each capacitor, you first try connecting a 15 MΩ resistor across each capacitor. The voltage across the 10 µF capacitor is now (b) ______ volts. The voltages are still not sufficiently equalized so you instead connect a resistance of (c) *(5 MΩ)(20 MΩ)* across each capacitor. The voltage across the 10 µF capacitor is now (d) ______ volts.

2. An electrolytic capacitor and a paper capacitor have the same capacitance, but the leakage resistance of the electrolytic capacitor is much lower than that of the paper unit. You wish to connect the two in series across a d-c power source. Can you do this successfully? Explain your answer.

3. Three capacitors, having values of 10, 30, and 5 µF, are connected in series. The capacitance of the combination is ______ microfarads.

4. Two 20-μF capacitors are each rated at 450 V. A circuit application requires 80 μF at 450 V. You require an additional capacitor of (a) ______ microfarads. You would connect the capacitors in (b) ______.

5. Each of two identical mica capacitors has a capacitance of 0.2 μF. One capacitor is left uncharged, but the second is charged to a potential of 200 Volts. The charged capacitor is then connected across the uncharged capacitor. The resulting voltage across the two capacitors will be ______ volts.

6. If four 20-μF 300-V capacitors are connected in parallel, the combination will have a capacitance of (a) ______ microfarads and can be used across an a-c voltage not exceeding (b) ______ volts peak.

7. If the capacitors of problem 6 are connected in series, the total capacitance will be (a) ______ microfarads and the combination may be used with an a-c voltage that does not exceed (b) ______ volts peak.

ANSWERS

1. (a) 128.57 V . . . The voltage is proportional to leakage resistance.

$$\frac{E_c}{\textit{total voltage}} = \frac{R_c}{R_{total}},\ \frac{E_c}{300} = \frac{15\ \text{M}\Omega}{35\ \text{M}\Omega},\ E_c = \frac{15}{35} \times 300 = 128.57\ \text{V}.$$

(b) 140.01 V . . . The equivalent shunt resistance across the 20 μF capacitor is

$$R = \frac{R_1 \times R_2}{R_1 + R_2} = \frac{15\ \text{M}\Omega \times 20\ \text{M}\Omega}{15\ \text{M}\Omega + 20\ \text{M}\Omega} = 8.57\ \text{M}\Omega.$$

Using the same procedure, the equivalent shunt resistance across the 10 μF capacitor is computed to be 7.5 MΩ. The same procedure as in part (a) is used to calculate

$$E_c = \frac{7.5}{16.07} \times 300 = 140.01\ \text{V}.$$

(c) 5 MΩ . . . The equalizing resistor should have a low resistance compared to the leakage resistance. The actual value of the equalizing resistors depends upon the particular application, but a resistance of about 25 or 30 per cent of the typical value of leakage resistance is good enough for most applications. Of course, better equalization would be obtained if the equalizing resistors were of a lower value, say 1 MΩ or less, but then they would draw more current from the power supply and thus waste more power. The actual value must be a compromise between good equalization and little waste of power. It must be pointed out that a single resistor shunting just one of the capacitors could not be used for equalization because leakage resistance changes with temperature and age. So, although the voltage across each capacitor might be equal at one temperature with brand new components and only one capacitor shunted, the voltage distribution would be vastly different at some other temperature or after a few years of operation. The resistor values are chosen to make the voltage drops more nearly equal. They need not be exactly equal. (d) 145.16 V . . . Using the same procedure as for part (b)

$$E_c = \frac{3.75}{7.75} \times 300 = 145.16\ \text{V}.$$

2. Yes . . . The leakage resistance of the electrolytic capacitor is lower. To compensate for the difference, equalizing resistors must be used. Also, the electrolytic capacitor must be connected for correct polarity.

3. 3 . . .

$$C_t = \frac{1}{\frac{1}{10} + \frac{1}{30} + \frac{1}{5}} = \frac{1}{0.1 + 0.0333 + 0.2} = \frac{1}{0.333} = 3\,\mu\text{F}$$

4. (a) 40 . . . $C_t = 20\,\mu\text{F} + 20\,\mu\text{F} + 40\,\mu\text{F} = 80\,\mu\text{F}$. The new capacitor must also have a 450-V rating. (b) Parallel

5. 100 . . . The voltage across a capacitor is equal to the charge on the capacitor divided by its capacitance, $E = Q/C$. Connecting two equal capacitors in parallel doubles the total capacitance but does not change the amount of charge. The charge is therefore distributed between the two capacitors. The equation $E = Q/C$ shows that when Q remains the same and C is doubled, voltage E is reduced to one-half of its original value. That is, $200 \div 2 = 100$ V.

6. (a) 80; (b) 300 7. (a) 5; (b) 1200

5 CURRENT FLOW THROUGH A CAPACITOR . . .In Fig. 13(a) water is being forced into the left side of the cylinder pushing the piston to the right, and as a result water molecules are made to flow through the load. The load in this case might be the cooling coil of a radiator. None of the water molecules entering the left side of the cylinder actually pass through the cylinder, because they can't pass through the piston. As far as the load is concerned, though, for every molecule that enters the left side of the cylinder, one molecule comes out of the right side. The result is effectively the same as if the water actually did pass through the cylinder.

In the capacitor circuit of Fig. 13(b) none of the electrons entering the left side of the capacitor actually pass through the capacitor, because they can't pass through the dielectric. But as far as the resistor is concerned, there is effectively a current flow through the capacitor. However, this effective current flow exists only while the capacitor is charging (or discharging). Once the voltage across the capacitor reaches the battery voltage, no more electrons can flow onto the left plate, so no more leave the right plate. Thus we see that capacitors cannot conduct continuously in one direction. That is, *capacitors cannot conduct direct current.*

Now let's suppose that the pump in Fig. 13(a) can be continually reversed, that is, it will force water first in one direction, then in the other direction, and continue to alternate back and forth. This means that water will first be forced into the left side of the cylinder, then into the right side periodically. In this way the load, or cooling coil, will see a continually alternating flow of water through it. So, even though no water molecules pass through the cylinder, the load does see a continuous alternating flow of water. We shall now see how this same idea can be applied to a capacitor circuit.

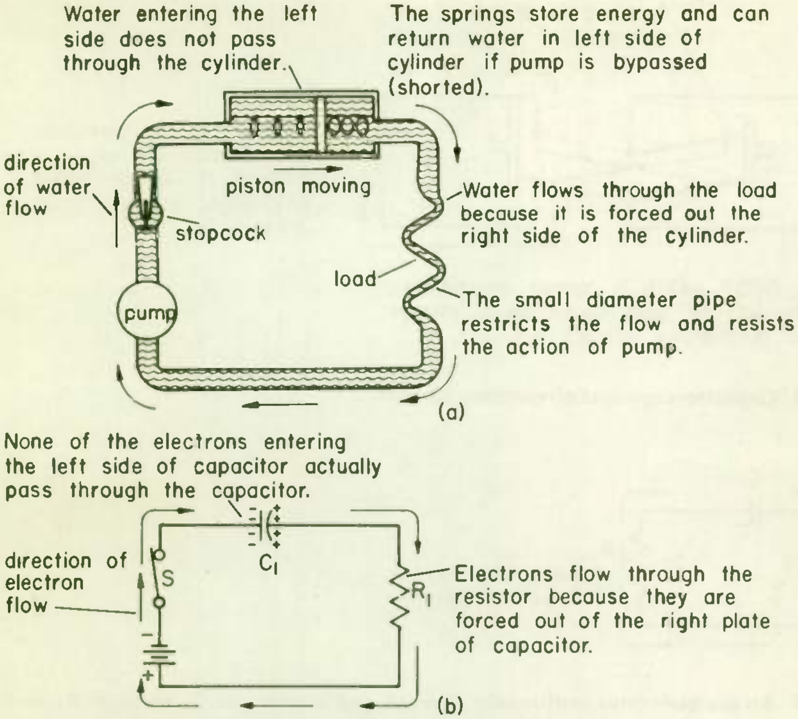

Fig. 13 Electrons do not flow *through* a capacitor.

Figure 14 shows a resistor and a capacitor connected to a battery through a double-pole double-throw switch. When the switch is thrown to the left, side *A* of the capacitor is connected to the positive side of the battery. Thus electrons will flow onto plate ***B*** and charge the capacitor. Now when the switch is thrown to the right, side *A* of the capacitor is connected to the negative side of the battery. This will cause the capacitor to discharge through R_1 and charge in the opposite direction. If we continually throw the switch from left to right and back again, the capacitor will continually charge and discharge through R_1. Hence, resistor R_1 sees a current flowing through it first in one direction and then in the other. That is, R_1 sees and *alternating current* flowing through it.

As far as R_1 is concerned, the alternating current is flowing through the capacitor, even though no electrons actually pass through the dielectric. So we can say that *capacitors pass, or conduct, alternating current.* In a practical circuit, the DPDT switch and battery can be replaced by an alternating-current generator. The a-c generator then continually charges and discharges C_1 through R_1, thus producing a continuous alternating current through R_1 as shown in Fig. 15.

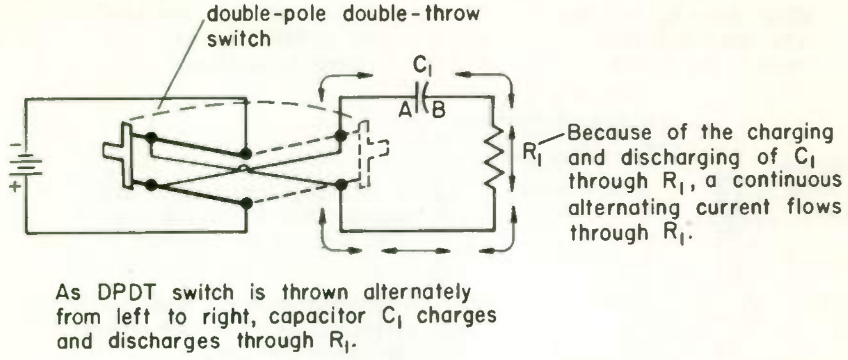

Fig. 14 **Capacitors conduct alternating current.**

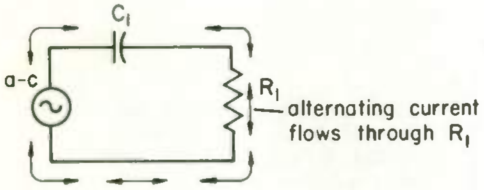

Fig. 15 **An a-c generator continually charges and discharges C_1 through R_1 and thus produces a continuous alternating-current flow through R_1.**

WHAT HAVE YOU LEARNED?

1. Electrons (a) *(can)(cannot)* flow through the dielectric of a capacitor. For this reason, direct current (b) *(can)(cannot)* flow through a capacitor.

2. If an a-c generator is connected to a load resistor through a capacitor, the resistor (a) *(will)(will not)* have alternating current flowing through it continuously because capacitors (b) *(conduct current only in one direction) (effectively conduct current while either charging or discharging).*

3. If a battery is connected to a resistor in series with a capacitor, the resistor will *(never have any flow of electrons through it)(have electron flow through it only while the capacitor is charging or discharging).*

4. In which circuit of Fig. 16 would more electrons flow through the load resistor R_1 after switch *S* is closed? *(circuit A)(circuit B)(both will have the same amount)(neither will have any current flow).*

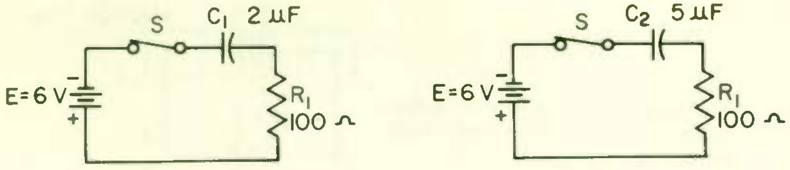

Circuit A

Circuit B

Fig. 16

ANSWERS

1. (a) Cannot; (b) cannot
2. (a) Will; (b) effectively conduct current while either charging or discharging.
3. Have electron flow through it only while the capacitor is charging or discharging.
4. Circuit **B** . . . The capacitor in circuit *B* is larger than in circuit *A*. Therefore, more charge is required to flow into C_2 before the voltage across it is equal to the battery voltage. Thus more electrons must flow through R_1 in circuit *B*.

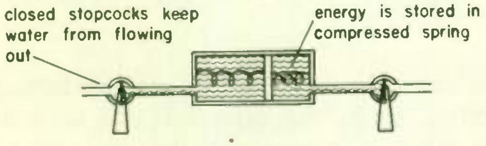

(a) Cylinder charged with water

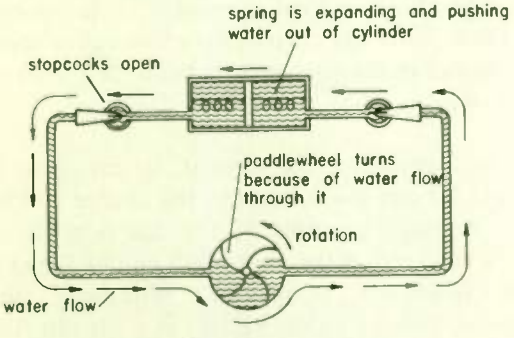

(b) Stored energy is doing work in turning paddlewheel

Fig. 17 Using the energy stored in the compressed spring.

6 USING THE ENERGY STORED IN A CAPACITOR . . . In the case of the pump forcing water into the cylinder, Fig. 13(a), work has to be done by the pump to compress the spring. Figure 17(a) shows a cylinder charged with water with closed stopcocks, or valves, at each end to keep

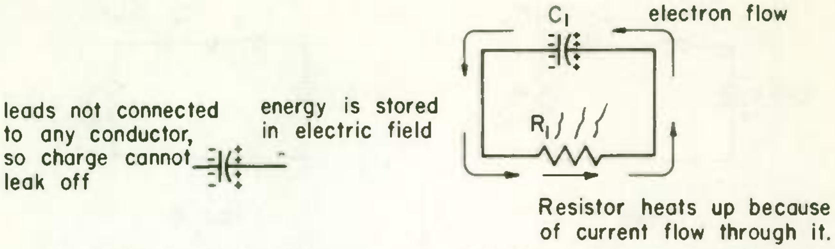

(a) Charged capacitor

(b) Energy stored in capacitor does work in heating up resistor

Fig. 18 Using the energy stored in the electric field.

the water from flowing out. Since the spring is compressed, energy is stored in the spring. Now if we connect the pipes to a load, in this case a paddlewheel, and open the stopcocks, water will be forced out of the cylinder by the spring through the load; see Fig. 17(b). This will cause the paddlewheel to turn. Thus, the energy stored in the spring is doing work to turn the paddlewheel. So we are getting back from the spring the work we put into it to compress it.

In Fig. 18(a) we see a charged capacitor. As long as no conducting path exists between the connecting leads, the capacitor will hold its charge. (Actually, no capacitor will hold a charge indefinitely, because no dielectric is perfect, but a good capacitor can hold a charge for several days.) Now if we connect the capacitor to a load (a resistor, in this case), current will flow through the load. Since the current flow through a resistor causes heating, the energy stored in the capacitor is being delivered to the external circuit in the form of heat.

The amount of energy stored in a capacitor increases if the capacitor is charged to a higher voltage, and for any given voltage, the charge will be greater for a larger capacitor. A simple example of how use is made of the energy-storing property of a capacitor is the photoflash gun of Fig. 19. In the cheapest flashguns the capacitor C_1 is omitted. Without C_1 the firing is not very reliable because, as soon as the battery is a bit old, the internal resistance is too high for the battery to be able to furnish enough current to fire the flashbulb. With the capacitor in the circuit the energy stored in the capacitor furnishes a heavy momentary current for certain flashbulb firing when the switch is closed. After firing, the battery charges C_1 back up again. Since the capacitor furnishes the firing current, it makes no difference if the internal resistance of the battery is high, and the battery can be chosen to have a long shelf life rather than a low internal resistance.

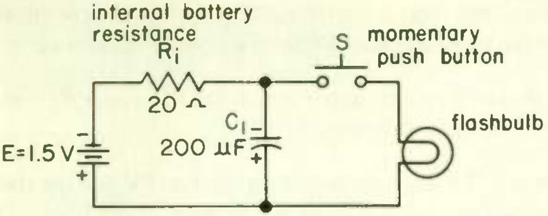

(a) Complete circuit

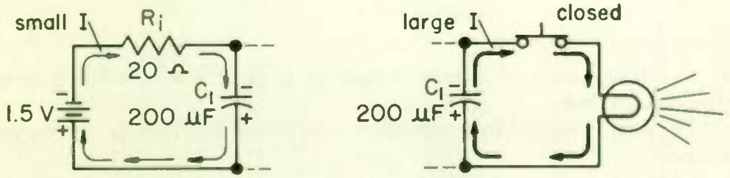

(b) C_1 charges slowly through R_i

(c) C_1 discharges rapidly through flashbulb when S is depressed

Fig. 19 Simple photo flashgun circuit.

Charged capacitors can store a great deal of energy, and so they can be very dangerous when used with high voltages. Even though all power is cut off, the high voltage capacitors must be discharged before working on the equipment. To discharge high voltage capacitors, connect a resistance of approximately 100 ohms across the capacitor terminals for a few seconds and then short the terminals with a screwdriver blade to be sure that capacitor is discharged. Always be sure that there is sufficient insulation between you and the capacitor terminals. You may want to tape one end of the discharge resistor to a screwdriver with a well-insulated handle as shown in Fig. 20. *The electrical shock from a charged capacitor can be fatal.*

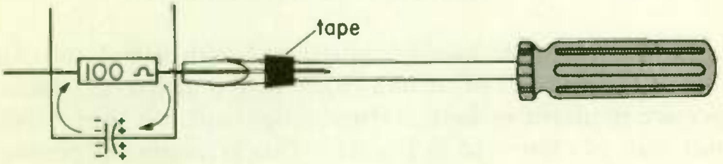

Fig. 20 Always discharge a capacitor before handling the terminals.

WHAT HAVE YOU LEARNED?

1. If capacitor C_1 in Fig. 19(a) were increased to 400 µF, (a)*(more) (less)* energy would be stored in it for the same battery voltage. If the capacitor

C_1 remained the same size, but the battery voltage were increased to 3 V, (b) *(more)(less)(the same amount of)* energy could be stored in it.

2. The energy stored in a capacitor is similar to *(water flow through a pipe) (inertia)(energy stored in a spring).*

3. You walk into a TV repair shop and find a TV set on the bench. The line cord is unplugged. Why would it not be a good idea to touch any of the components under the chassis with your bare hands?

ANSWERS

1. (a) More . . . The amount of energy stored in a capacitor is directly proportional to the capacitance.
(b) More . . . The energy stored in a capacitor increases if the voltage across the capacitor increases.
2. Energy stored in a spring 3. The power supplies in TV sets, as well as in other electronic equipment, use large filter capacitors. These capacitors can often retain a charge for quite a while after the TV set has been turned off, even if the line cord is disconnected. Be sure to short the capacitors with a resistor and screwdriver before touching anything that might be connected to them.

7 PHYSICAL CONSTRUCTION OF CAPACITORS . . . Many types of capacitors are manufactured to suit different applications. Their values may be fixed or variable, according to the purpose for which they are intended. Because a fixed capacitor is fundamentally two metallic sheets separated by a dielectric, it is usually classified according to the type of dielectric used. Some materials frequently used as dielectric are mica, paper, ceramic, and semiliquid electrolyte.

The construction of a *mica capacitor* is shown in Fig. 21. The plates consist of a number of strips of metal foil separated by thin sheets of mica. The ends of alternate strips, which extend beyond the mica sheets are connected together to form a terminal at each end of the capacitor.

So-called *paper capacitors* are usually constructed with metal foil for the conductors and some form of treated paper as the dielectric. Metal foil and paper are prepared in long, narrow strips and are then rolled into a compact unit, as illustrated in Fig. 22. This arrangement permits a lead to be connected at each end.

One type of *ceramic capacitor* is the tubular form shown in Fig. 23. A thin coating of silver is deposited on the inside and outside surfaces of the tube, and connecting leads are brought out at the ends. This unit is then sealed in a second ceramic tube, and the entire assembly is wax-impregnated for moistureproofing.

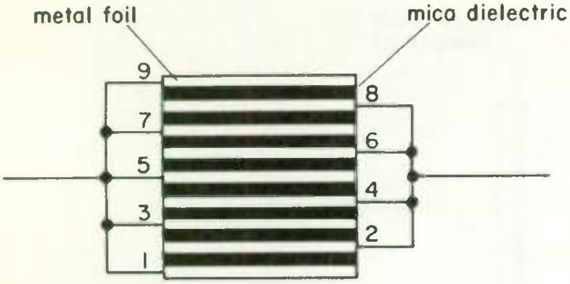

Fig. 21 Construction of a mica capacitor.

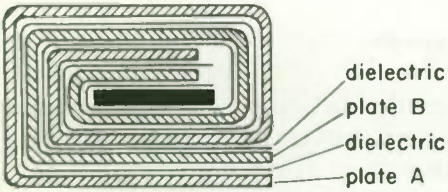

Fig. 22 Construction of a paper capacitor.

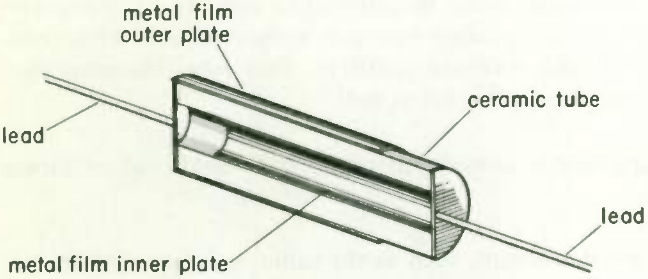

Fig. 23 Construction of a ceramic capacitor.

The *electrolytic capacitor* is made by filling the space between two rolled aluminum-foil plates with a semiliquid electrolyte. This electrolyte consists of a thick paste made of aluminum borate or sodium phosphate, as shown in Fig. 24. When a d-c voltage is applied across the two electrodes, a thin chemical film forms on the positive plate. The voltage is called the *forming voltage*, and the oxide film is the dielectric material of the capacitor. The electrolyte is electrically part of the negative plate because it is a conductor in contact with the aluminum foil.

Because the oxide film in an electrolytic capacitor is extremely thin (only 25 millionths of an inch thick), the capacitance is very high for the capaci-

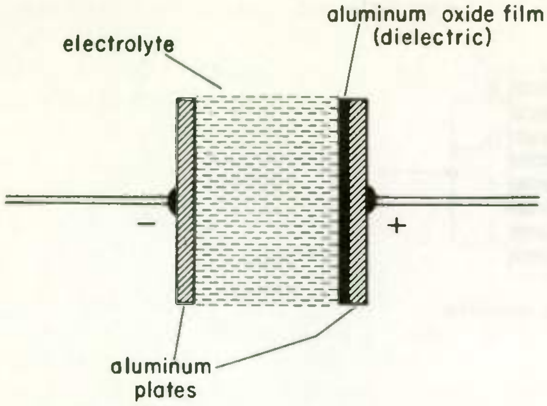

Fig. 24 Construction of an electrolytic capacitor.

tor size—remember that the thinner the dielectric of a capacitor, the greater the capacitance. Electrolytic capacitors take up only about 15 per cent of the space required for equivalent paper capacitors.

The polarity of the electrolytic capacitor must always be observed; hence, the capacitor can be used only in d-c circuits. To maintain the oxide film, the positive plate must never be allowed to operate at a negative potential. An electrolytic capacitor becomes a short circuit when connected into the circuit with reversed polarity. This ruins the capacitor, and perhaps other circuit components as well.

The electrolytic capacitor is considered to be the workhorse of power supply filter circuits.

In certain parts of a radio circuit, such as the tuner, it is necessary to use a variable capacitor. This consists of two sets of plates: a rotating set called the *rotor* and a stationary set called the *stator*. The stator is usually constructed with one more plate than the rotor, and the rotor plates can be moved freely in between the stator plates. The capacitance can then be varied from its minimum value, when no part of the rotor plates is in mesh with the stator plates, to its maximum value, when the rotor plates are fully meshed with the stator plates.

Sometimes it is necessary to adjust a capacitor to a definite value. Once this has been set, it is not changed. Adjustable capacitors used for this purpose are called *trimmers* or *padders*. One type of trimmer capacitor is similar in construction to a variable capacitor, but it has fewer plates and a much smaller plate area. The rotor is usually adjusted with an alignment tool instead of a knob.

WHAT HAVE YOU LEARNED?

1. A mica capacitor is made up of 73 plates. Each plate is 1.5 in.^{2} (square inches) in area and is separated from the next plate by a sheet of mica ($K = 5.5$) 0.02 in. thick. The capacitance is ______ picofarads.

2. An electrolytic capacitor is accidentally connected in an a-c circuit. What, if anything, happens to the capacitor?

3. An electrolytic capacitor has a high capacitance because it has a ________ dielectric.

4. The dielectric in an electrolytic capacitor is a thick paste. *(true) (false)*

ANSWERS

1. 6680 . . . $C = \dfrac{0.225\,KA(n-1)}{t} = \dfrac{0.225 \times 5.5 \times 1.5 \times 72}{0.02}$

$= 6680$ pF (The exact answer is 6682.5 pF, which becomes 6680 pF when rounded off to three significant figures.)

2. The capacitor is ruined. During one of the a-c cycles, a negative potential is applied to the positive plate of the capacitor. This removes the oxide film that serves as the dielectric.

3. Thin 4. False . . . The dielectric is an oxide film.

8 CHARACTERISTICS OF PRACTICAL CAPACITORS . . . The power expended in a d-c circuit is equal to the voltage across the circuit times the current through the circuit, or $P = EI$. This is true in an a-c circuit only for that part of the current that is in phase with the voltage. If the current and voltage in a circuit are exactly 90° out of phase, no power is expended in the circuit. Now, in a perfect capacitor the current and voltage are exactly 90° out of phase, so *no power is dissipated in a pure capacitor.*

In practical capacitors, however, some power is dissipated. The power loss takes place mostly in the dielectric. This loss in power is due to molecular friction in the dielectric material itself. The amount of power dissipated in the dielectric varies with the material of the dielectric. This loss in power may be looked at as resulting from a resistor in series with a perfect capacitor, as shown in Fig. 25. The larger this series resistance, the more power lost in the capacitor. The series resistance retards the current flow so that it leads the capacitor voltage by slightly less than 90°. The capacitor now dissipates some power, which appears as heat in the capacitor.

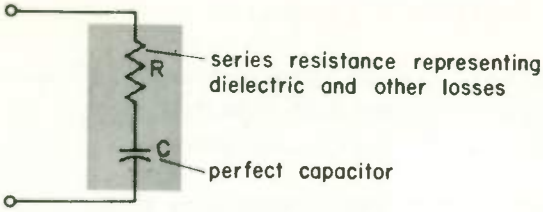

Fig. 25 Equivalent circuit for a practical capacitor.

In addition to the losses in the dielectric, there are losses in the connecting leads of the capacitor and in the capacitor plates themselves. The losses in capacitors are not constant; they increase with temperature, frequency, and age of the capacitor. The losses are usually small over the frequency range for which the capacitor was intended to be used.

The highest frequency for which a capacitor is suitable is largely determined by the frequency at which the losses become objectionably high. This upper frequency limit depends upon the material used for the dielectric. Mica, ceramic, and plastic dielectrics can be used at the highest frequencies, up to 10,000 MHz (megahertz). Among widely used dielectrics, tantalum has the lowest high-frequency limit; it is not suitable for use at frequencies above 1 kHz.

Another important factor affecting the performance of capacitors as circuit elements is the effect of temperature on the dielectric. Some dielectrics change very little with a change in temperature; others change considerably. When the dielectric constant changes, the capacitance changes. Also, when the leakage resistance decreases, the operation of the capacitor at very low frequencies is hindered.

Voltage ratings of capacitors range from a couple of volts to many thousand volts, depending on the type and thickness of dielectric used. The thicker the dielectric, the more voltage it can withstand, so a capacitor gets larger and larger in physical size as the voltage rating increases. Figure 26 shows the approximate sizes of capacitors rated at 100 V using different dielectrics.

9 CHOOSING THE RIGHT CAPACITOR FOR THE JOB . . . Now that you know how different dielectrics affect the performance of capacitors under various operating conditions, we shall discuss some of the factors to consider when choosing a capacitor to do a certain job. Actually, there is no one best capacitor for all purposes. The choice of a particular dielectric depends on a number of considerations. The most important points to consider are frequency, voltage rating, temperature variation,

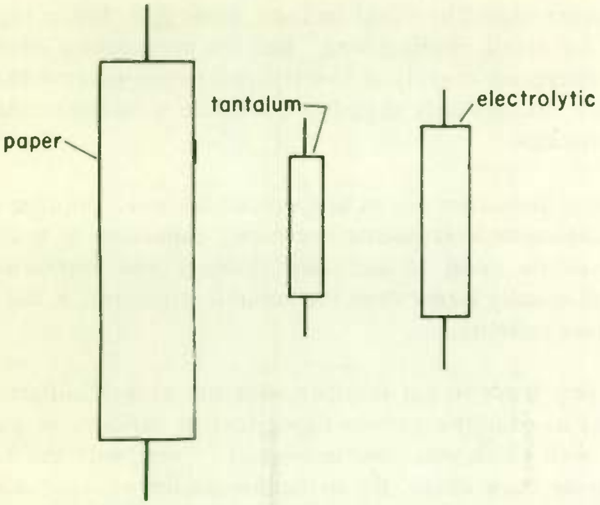

Fig. 26 **Approximate sizes of 1-μF capacitors using different dielectrics but all with 100-V rating.**

physical size, and cost. A few examples will show you how a capacitor can be selected.

Suppose we need a 500-pF capacitor to operate in a tank circuit of an r-f amplifier whose frequency is 200 MHz. The d-c voltage across the capacitor will be 3000 V. Also, suppose that the temperature inside the amplifier will get no higher than 50°C but that the capacitor should have good temperature stability (low capacitance variation with temperature change). The table on the inside back cover shows that mica, ceramic, or plastic dielectric would possibly be suitable. But since the capacitance variation with temperature of ceramic capacitors is not as good, we shall limit our choice to either mica or plastic. The final choice will be a compromise. If extremely high leakage resistance and excellent temperature stability were required, we would probably choose plastic. But if the characteristics of mica are suitable, this might be a better choice because mica capacitors are generally more rugged and have very good long-term stability.

Next, let's consider a case where we need a low-frequency filter capacitor of 100 μF rated at 30 V. The capacitor is to be used in a small portable unit, so small size is important. The unit is to be operated outside, where the temperature can get as low as -20°F, and so, for proper filtering, the capacitance should not change significantly at the low temperatures. Again looking at the table on the inside back cover, we see that either an electrolytic or a tantalum capacitor could be used, since each has a high value of capacitance for small physical size. But the capacitance of an electrolytic capacitor decreases sharply at low temperatures, whereas that of a tantalum capacitor changes only slightly. Tantalum would therefore be the best choice in this case.

A wide variety of plastic dielectrics are in use, one of the most popular is *Mylar*. The Mylar capacitor is replacing the paper capacitor in many applications because of its good temperature stability and somewhat smaller size. Although usually larger than the ceramic capacitor, it has a much better temperature stability.

Probably one of the best ways to get familiar with the uses of different capacitor dielectrics is to examine various capacitors at random in any electronic equipment with which you come in contact. Then, with the aid of the table on the inside back cover, try to determine for yourself why the designer chose the particular type of capacitor for the job. Often, remember, any of several types of dielectrics might be usable, but the designer chose one particular type for some reason, whether it be cost, stability, small size, or another reason.

WHAT HAVE YOU LEARNED?

1. What type of capacitor would you use if you needed a 220-pF capacitor rated at 500 V to operate at 50 MHz? The capacitor must have good temperature stability and must operate at temperatures up to 265°F. [The formula to convert degrees Fahrenheit to degrees centigrade (or Celsius) is $C = \frac{5}{9}(F - 32)$]. *(mica)(plastic)(ceramic)(paper)*

2. You need a 0.001-μF capacitor rated at 150 V for use with audio frequencies up to 15 kHz. The unit is to be operated at room temperature, and the variations in temperature will be very small. Choose an economical capacitor of small physical size to do the job. *(plastic)(ceramic)(mica)*

3. You need a 0.1-μF 600-V capacitor to be used at 100 kHz. The temperature stability should be better than is available with ceramic capacitors, but small size and low cost of the capacitor are desired. What type would you use? *(mica)(Mylar)(tantalum)*

ANSWERS

1. Mica . . . The temperature stability of ceramic is not good enough. Plastic

dielectrics have very good temperature stability, but the maximum temperature of a plastic type is +125°C. The intended operating temperature is 265°F. Converting degrees Fahrenheit to degrees centigrade, we find that $C = \frac{5}{9}(F - 32) = \frac{5}{9}(265 - 32) = 129^\circ\mathrm{C}$, which is higher than the rated maximum temperature for the plastic type. Paper dielectrics are not generally suitable for use at frequencies above 1 MHz.

2. Ceramic . . . Plastic or mica could, of course, also be used, but the size and cost of either would be greater than of the ceramic type.
3. Mylar . . . Mica capacitors are not readily available in values as high as 0.1 μF; and if they were available, the size and cost would be high. Tantalum capacitors would not be suitable for use at 100 kHz.

PRACTICAL INDUCTORS AND THEIR USE

You are already familiar with the basic principles of inductance. Now we shall explore those principles a little deeper and show their application to practical inductors. Since inductance is one of the three basic circuit elements—the others are capacitance and resistance—it is important to understand the subject well.

10 MAGNETIC COUPLING BETWEEN COILS . . . When two inductors are near each other, there may be interaction between them; the interaction is caused by the field of either coil threading the turns of the other coil. This interaction is called *magnetic coupling*, and it is of great importance in electronics. Figure 27 shows what is meant by magnetic coupling. Basically, inductors are said to be magnetically coupled if some or all of the magnetic lines of flux threading one coil thread the other coil also. In Fig. 27(a), none of the lines threading L_1 also thread L_2, so there is no magnetic coupling between the two coils. Now, in Fig. 27(b) the two iron cores are almost touching, so that all the magnetic lines of flux threading L_1 also thread L_2. Here we have maximum coupling.

The reason that we must consider coupling is that, when two circuits or components are coupled together, any change that takes place in one will be felt by the other. Since L_1 and L_2 are coupled in Fig. 27(b), anything that changes the number of flux lines threading L_1 will also change the number of lines of flux that thread L_2. In Fig. 27(c), only some lines of flux thread both coils, so that, although any change in L_1 will be felt in L_2, the extent of the coupling will be less than the maximum possible.

The two coils in Fig. 27 are shown connected in series, but you can also have magnetic coupling when the electrical circuits for the two coils are isolated from each other. A transformer is an example. A transformer works because of the magnetic coupling between the primary and secondary coils, but the two coils are electrically isolated.

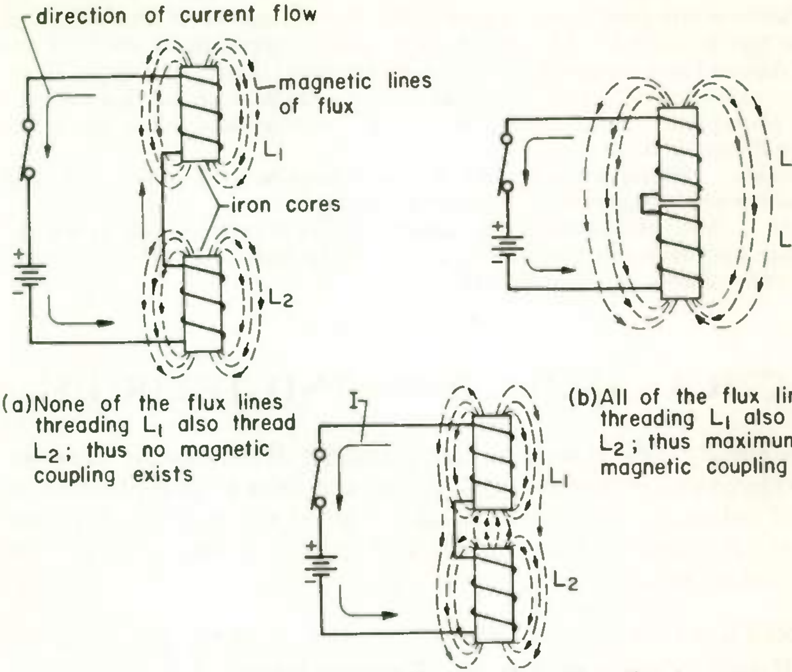

(a) None of the flux lines threading L_1 also thread L_2; thus no magnetic coupling exists

(b) All of the flux lines threading L_1 also thread L_2; thus maximum magnetic coupling exists

(c) Only some of the flux lines threading L_1 also thread L_2; thus only partial magnetic coupling exists

Fig. 27 Inductors are magnetically coupled if some or all of the lines of flux threading one coil also thread the other coil.

11 FINDING COMBINED INDUCTANCE OF INDUCTORS . . . The simplest case of two inductors used in series or parallel occurs when there is no magnetic coupling between the two coils. Then the total inductance of the two inductors, if in series, is merely the sum of the individual inductances, as shown in Fig. 28(b). In other words, $L_t = L_1 + L_2$. Notice that the two inductors in series add, just as the two resistors in series in Fig. 28(a) add. This is because the two inductors in series offer more opposition to the flow of current than either inductor offers by itself.

If the two inductors are in parallel, their equivalent inductance is found in just the same way that the equivalent value of two resistors in parallel is found. That is,

$$L_{eq} = \frac{1}{\dfrac{1}{L_1} + \dfrac{1}{L_2}}$$

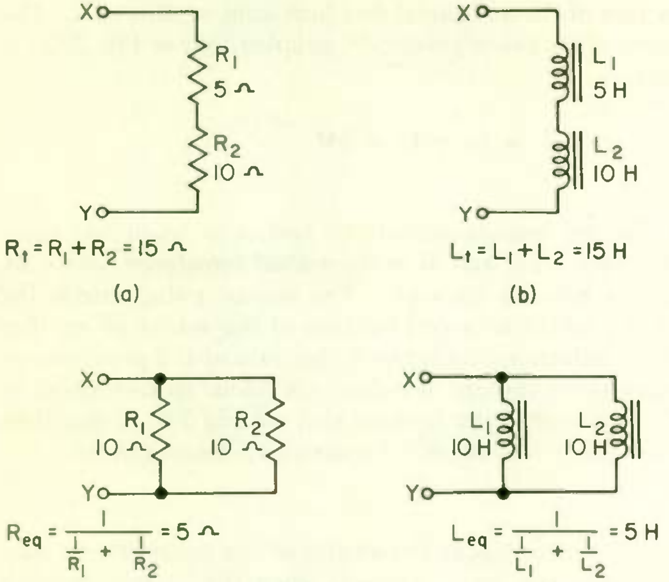

Fig. 28 Inductors in series, like resistors in series, add if there is no magnetic coupling between the coils. Inductors in parallel, like resistors in parallel, combine if there is no magnetic coupling between the coils.

See Fig. 28(c) and (d). It is reasonable that two inductors in parallel would offer less opposition to the flow of current than either inductor by itself, because the current now has two paths through which to flow, just as it has through two resistors in parallel.

As stated, the formulas for finding the combined inductance of two or more inductors in series or parallel are valid only if there is no magnetic coupling between the coils. The total inductance, in Fig. 27(c), of L_1 and L_2 in series as shown is greater than the sum of the inductances of L_1 and L_2. That is because many of the lines of force set up by the current through L_1 also thread L_2. Hence, the lines of force through L_2 consist of the lines set up by the current flowing through the winding of L_2 plus the lines coming from L_1 that also thread L_2. As a result, the number of lines of force through L_2 in (c) is greater than in (a), where there is no magnetic coupling. Since the more flux lines set up by a given current, the greater the inductance, the equivalent inductance offered by coil L_2 is higher than it would be if L_1 were not close by.

You have seen how the influence of L_1 has increased the equivalent inductance of L_2. In an identical manner the equivalent inductance of L_1 is also increased because of the additional flux lines coming from L_2. The combined inductance of the two magnetically coupled coils of Fig. 27(c) is given by the formula

$$L_t = L_1 + L_2 + 2M$$

Where L_1 and L_2 are the inductances of the two coils when not magnetically coupled to each other and M is the *mutual inductance* caused by the magnetic coupling between the coils. The mutual inductance is the amount of inductance added to a coil because of the action of another coil. The amount of inductance added to L_2 because of the proximity of L_1 is always the same as the amount of inductance added to L_1 because of the proximity of L_2. Notice in the formula that we add $2M$, rather than just M, because each coil has its effective inductance increased by M.

You will remember that a coil has an inductance of one henry if a counter emf of one volt is developed across the coil when the current through the coil changes at the rate of one ampere per second. Similarly, the mutual inductance between two coils is one henry if the current changing at the rate of one ampere per second through one of the coils induces an emf of one volt in the other coil. To say it another way, the mutual inductance is one henry if one ampere flowing through one coil sets up a flux of $\frac{100{,}000{,}000}{N}$ lines of force in the other coil, where N is the number of turns in the second coil. The 100,000,000 comes from the fact that lines of force must change at the rate of 100,000,000 per second in order to induce one volt in a single turn of wire.

The mutual inductance between two coils reaches its greatest possible value when, as in Fig. 27(b), all the lines of force of each coil also thread the other coil. If the two coils are of equal inductance, the mutual inductance is then equal to the inductance of one of the coils. If the two coils are of unequal inductance, the maximum value that the mutual inductance can have is $\sqrt{L_1 L_2}$. When only partial magnetic coupling exists between the two coils, as in Fig. 27(c), the mutual inductance is equal to $k\sqrt{L_1 L_2}$, where k, called the *coefficient of coupling*, is equal to the fractional part of the lines of force produced in one coil that also thread the other coil. For example, if one-fourth of the lines of force set up in L_1 by the current through L_1 also thread L_2, the value of k is 0.25. When there is no coupling between the coils, $k = 0$; and when maximum coupling exists, $k = 1$. Thus k varies in value between 0 and 1.

1. Two inductors, each having an inductance of 2 H, are connected in parallel so that no magnetic coupling exists between the two. The equivalent inductance of the two in parallel is _______ henrys.

2. Two inductors each having an inductance of 2 H are wound on the same core. If one of the inductors is left disconnected, what will be the total inductance presented to the circuit? *(zero)(1 H)(2 H)(4 H)*

3. Two air-core coils, one having an inductance of 500 μH and the other having an inductance of 300 μH, are placed physically close to each other so that their magnetic fields interact to increase the total inductance. Assume that the mutual inductance between the two is 50 μH. What is the total inductance of the two if they are connected in series? _______ henrys.

4. Two 25-mH coils are connected in series with magnetic coupling between them. What is the maximum possible value for the total inductance?

5. Two 15-mH coils are connected in series so that some of the lines of force interact and aid each other. If the coefficient of coupling is 0.3, what is the combined inductance?

ANSWERS

1. 1 H . . . $L_{eq} = \dfrac{1}{1/L_1 + 1/L_2} = \dfrac{1}{1/2 + 1/2} = \dfrac{1}{1} = 1$ H
2. 2 H . . . If one winding is left disconnected, there will be no magnetic field set up by that winding, so it will have no effect on the total inductance.
3. 900 μH . . . $L_t = L_1 + L_2 + 2M = 500 + 300 + 2 \times 50 = 900\,\mu\text{H}$.
4. 100 mH . . . The maximum value that M could have is 25 mH. $L_t = L_1 + L_2 + 2M = 25 + 25 + 50 = 100$ mH.
5. 39 mH . . . If all the lines of force threaded both coils, M would be 15 mH. Since only 0.3 of the lines of force thread both coils, $M = 0.3\sqrt{15\text{ mH} \times 15\text{ mH}} = 0.3 \times 15\text{ mH} = 4.5\text{ mH}$. $L_t = L_1 + L_2 + 2M = 15 + 15 + 2 \times 4.5 = 39$ mH.

12 AIDING AND OPPOSING COUPLING FLUX . . . In discussing the effects of magnetic coupling on total inductance in the preceding topic we assumed that the direction of current flow in the two coupled coils was such that the lines of force of one coil aided the lines of force from the other coil, thus increasing the total inductance. If the two flux fields "buck" or oppose each other, the effect is to decrease the total inductance.

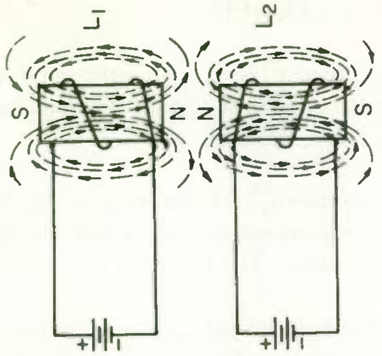

Fig. 29 Flux through each coil is reduced when the coils are so connected that the lines of force oppose each other.

In Fig. 29 the two north poles of the coils are brought together, so that the flux set up by the current flowing through coil L_1 is opposed by the flux of opposite direction set up by the current through coil L_2. The result of this bucking interaction is to reduce the apparent inductance of each coil by the amount of the mutual inductance. Hence, when two coils are connected in series opposing, the combined inductance is given by the formula

$$L_t = L_1 + L_2 - 2M$$

As an extreme example, consider two coils, each of 5 H inductance, connected in series with their fields opposing. If we further assume maximum coupling, the mutual inductance will also be 5 H. Then the total inductance is

$$L_t = L_1 + L_2 - 2M = 5\text{ H} + 5\text{ H} - 10\text{ H} = 0\text{ H}$$

That is, the two opposing flux forces have canceled each other out, so that there is no flux at all and hence no inductance.

When two coils are wound on the same iron core, as in Fig. 30, the mutual inductance will be nearly the maximum possible value. (It is hard to get a high coefficient of coupling by using coils with air cores.) Hence, the inductance in Fig. 30(b), where the two coils are bucking, will in fact be almost zero if the two coils are identical. If each coil is 5 H, the total inductance in Fig. 30(a) is

$$L_t = L_1 + L_2 + 2M = 5 + 5 + 10 = 20\text{ H}$$

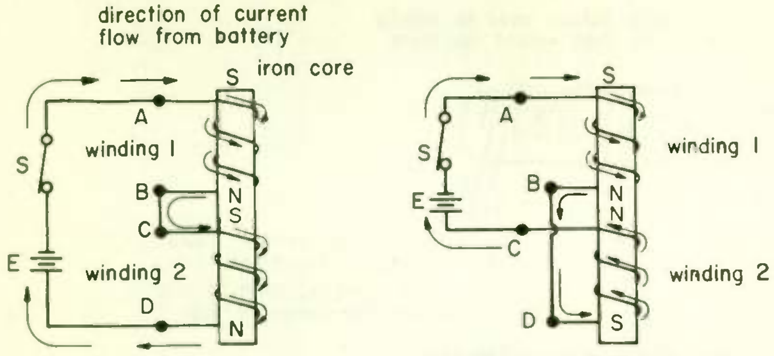

(a) Magnetic fields aid, so inductances add

(b) Magnetic fields oppose, so inductances subtract

Fig. 30 Inductors in series will add or subtract depending upon the direction of their magnetic fields.

The total inductance of two equal inductors connected in series aiding with maximum coupling is four times the inductance of one of the inductors. Obviously, it is of the utmost importance that coupled coils be so connected that their fields aid if maximum inductance is wanted.

Notice the direction of current flow through the windings in Fig. 30(a). When switch *S* is closed, current flows from the battery in the direction shown by the arrows. That is, current flows from the negative terminal of the battery into point *A* of winding 1; it then flows through winding 1 and out through point *B*. By applying the left-hand rule, we see that the magnetic field set up by the current flow is as labeled in the figure, namely, the north pole is at the bottom of the winding. As for winding 2, we see that the current enters at *C* and leaves at *D*. Again applying the left-hand rule, we see that the north pole of the second winding is also at the bottom of the winding. Since the north poles of both windings point in the same direction, the magnetic fields aid, so the combined inductance is higher than the sum of the individual windings.

In Fig. 30(b) the two coils are so connected that, when the left-hand rule is applied, it is found that the two north poles point toward each other, so that the fields cancel each other. Reversing the connections of one of the coils will correct the situation.

One practical example of two windings wound in opposite directions on a common core is a noninductive wire-wound resistor. Resistors of more than about two watts power rating are generally made by winding *resistance wire* (a wire made from a nickel-chromium alloy or similar ma-

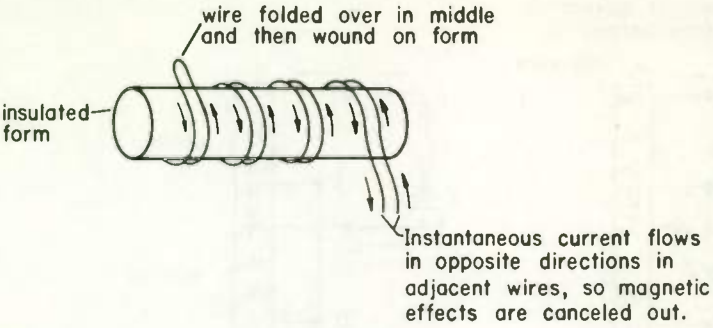

Fig. 31 Noninductive wire-wound resistor.

terial) on an insulating core, such as ceramic. Since the winding or wire forms a coil, the wire-wound resistor will have some inductance as well as resistance. At higher frequencies, this inductance can have undesirable effects, as you will see later.

If it is desired to have a noninductive wire-wound resistor, one can be made by using the technique shown in Fig. 31. A single length of wire that has the desired total resistance is folded in the middle and then wound around the form. In this way, the instantaneous currents through the two halves of the wire will be flowing in opposite directions. Thus the magnetic field of the current flow in each turn of wire will be canceled out by the magnetic field of the adjacent turn. Therefore, the inductive effects of one-half of the wire will cancel out the inductive effects of the other half and thus make the resistor noninductive.

WHAT HAVE YOU LEARNED?

1. When two inductors are connected in series and are placed in close proximity so that the magnetic fields produced by the coils aid, the total inductance of the two coils will be (a) *(greater than)(less than)* that of the larger inductor. If the two are so wired that the magnetic fields of the two coils buck, the total inductance of the two will be (b) *(greater than)(less than)* that of the larger inductor.

2. Connect the two windings of Fig. 32 so that there will be maximum inductance between teminals *X* and *Y*.

3. What is the total inductance of two 10-H coils wound on the same iron core connected in series bucking?

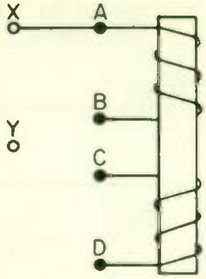

Fig. 32

ANSWERS

1. (a) Greater than; (b) less than
2. See Fig. 33 . . . Assume a voltage applied to the windings at terminals *X* and *Y*. Then, by using the left-hand rule, determine what the direction of the magnetic fields will be. In order to obtain maximum inductance, the magnetic fields must aid.
3. Zero

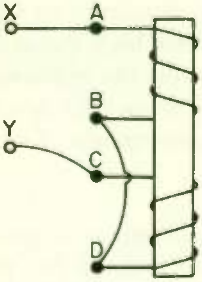

Fig. 33

13 SOME TYPES OF INDUCTORS . . . Inductors are very often called chokes. An example of a common use for a choke is as a power supply filter. The purpose of the choke is to smooth out variations in load current, thereby making the current through the coil essentially constant, or d-c. The inductor smoothes out the variations because, as you will remember, current through an inductor cannot change rapidly. Figure 34(a) shows a source delivering current to a load. In Fig. 34(b) we see that the source voltage is composed of a d-c voltage upon which there is some a-c variation. The choke prevents variations in load current, thereby making it essentially constant, as shown in Fig. 34(c).

A choke used for low-frequency work (audio frequencies and frequencies

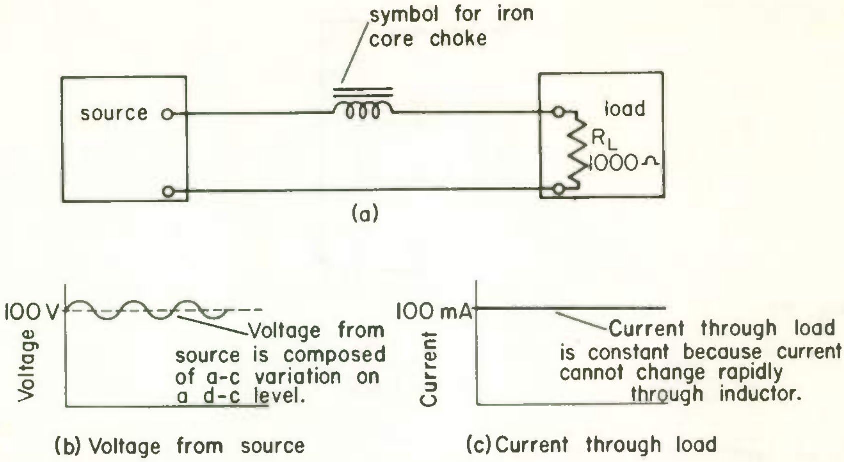

Fig. 34 A choke smooths out variations in load current.

up to 50,000 Hz) usually has a heavy iron core. That is because a high value of inductance is needed at low frequencies to make the inductive reactance high enough to provide sufficient smoothing. In high-frequency circuits, such as at radio frequencies, only small air-core chokes are necessary. That is because, at these high frequencies, only a small amount of inductance is needed to provide the required inductive reactance. Radio-frequency chokes, or RFC's, as they are called, are often wound on hollow paper or ceramic tubes because of the small amount of inductance needed.

Figure 35 shows the construction of a low-frequency choke coil using a laminated iron core. Notice that the flux paths leave the top of the coil and travel through the two sides of the core and finally join again at the

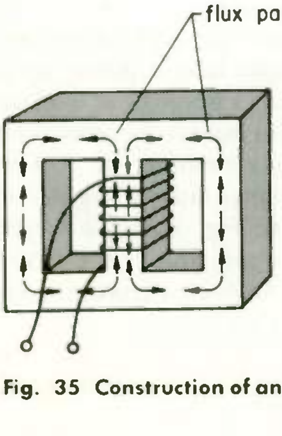

Fig. 35 Construction of an iron-core choke.

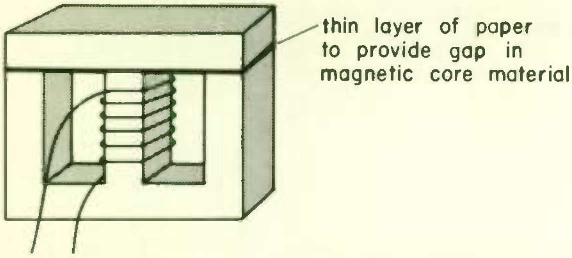

Fig. 36 **Construction of an iron-core choke showing gap to prevent saturation due to d-c current flowing through choke.**

bottom of the coil. This type of construction offers a low-reluctance path for the flux, so that there are more lines of force and therefore a higher inductance. There is one slight drawback, however. Since the reluctance path is low, a d-c current flowing through the choke, such as that shown in Fig. 34, might cause core saturation. If the core is saturated, the inductance of the coil will be reduced. To avoid this difficulty, the core is sometimes so constructed as to leave a small air gap as shown in Fig. 36. Although the air gap will prevent core saturation, it will also somewhat decrease the inductance of the coil. Therefore, the air-gap spacing is carefully computed to prevent core saturation without seriously decreasing the inductance of the coil.

Another disadvantage of the choke shown in Fig. 36 is that due to the square corners and the fact that the flux must make sharp bends in traveling around the corners; some flux leaves the core and travels through the air. Even though this flux, or *leakage flux* as it is called, is small, it can affect nearby circuits and introduce an unwanted signal into them. This problem is partly solved by enclosing the core in a metal box, called a shield, which keeps the flux from traveling outside to the nearby circuits.

Even with the metal "can" around the core, inductors still have some leakage flux that may interfere with other circuits. Because of this, precautions must be taken in planning a chassis layout so that any magnetic circuits, such as chokes and transformers, are not placed physically near any sensitive amplifier circuitry that might pick up the magnetic fields. Since the leakage flux is small, no trouble usually results if the inductors are placed near the output stages. But if the chokes or transformers are placed near the "front end," or first stages, of a high-gain amplifier, the magnetic pickup may be sufficient to introduce unwanted signals.

Another type of commonly used inductor is the *toroid*. A toroid coil is a coil wound on a doughnut-shaped core, as shown in Fig. 37. The core of

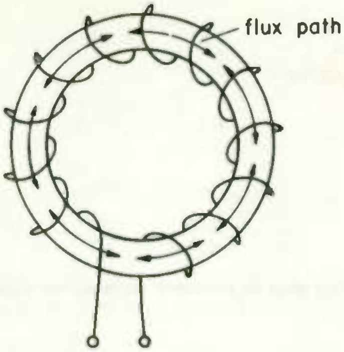

Fig. 37 Toroid inductor.

the toroid is not laminated like the choke core in Fig. 35, but the material used to make the core, powdered iron adhered together by an insulating binding material, has a high resistance, so there is little effect from eddy currents.

The toroid has a definite advantage over the square laminated core in that there is almost no flux leakage. The core provides a smooth continuous path for the flux, so the leakage flux is near zero. Therefore, if an inductor is needed in a low-level stage (near the front end of an amplifier), a toroid can be used and will not interfere magnetically with the nearby circuits.

Still another type of commonly used inductor consists of a number of turns of wire wound on a hollow paper or ceramic tube. Inside the tube is placed a powdered-iron core, or slug, which is movable through the winding to vary the inductance of the coil. The more iron inside the coil, the higher the inductance, and vice versa. This type of inductor, shown in Fig. 38 is often used in tuning circuits where it is necessary to have a variable inductance. The iron core is moved by adjusting a threaded shaft that is connected to the core. The shaft is usually slotted so that it can be adjusted with a non-magnetic screwdriver.

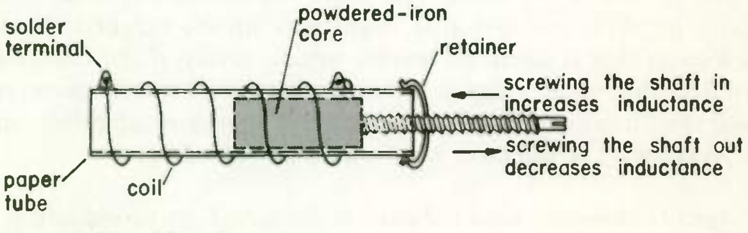

Fig. 38 Variable inductor.

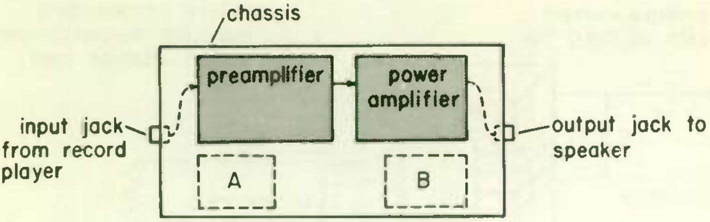

Fig. 39

We have seen that inductors are supplied in a wide variety of shape and size for different applications. Even though inductors vary in the physical construction, they have some points in common. All inductors are made by winding wire in the form of a coil. The more turns of wire, the higher the inductance. In addition, the core material affects the inductance. The higher the permeability of the core, the higher the inductance.

WHAT HAVE YOU LEARNED?

1. Figure 39 shows a chassis layout for a high-fi amplifier for a record player. You wish to mount a choke coil for a power supply on the chassis. The choke is similar to the one shown in Fig. 35. Which position on the chassis would be a better location for the choke? *(position A)(position B)* Why?

2. In the diagram of Fig. 34, the voltage across R_L *(fluctuates above and below 100 V, as the voltage from the source does) (is essentially constant at 100 V) (is much less than the voltage from the source because of the drop across the choke).*

ANSWERS

1. Position B . . . The input to the amplifier is too near position *A*. If the choke were mounted there, the leakage flux from the choke might be picked up by the preamplifier. That would cause an undesired hum in the output.
2. Is essentially constant at 100 V . . . The choke keeps the current through the load essentially constant. Since the current through R_L is constant, the voltage across R_L will also be constant.

TRANSFORMERS

Almost every piece of electronic equipment uses transformers of one type

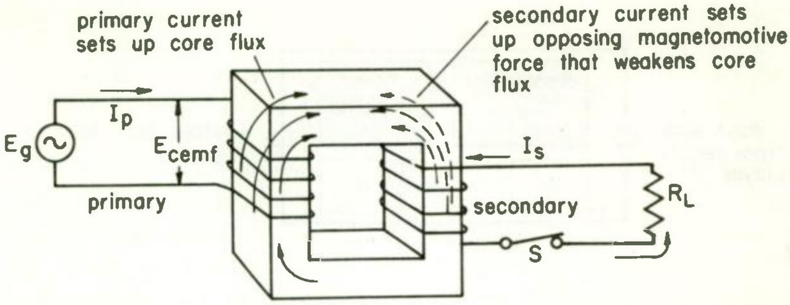

Fig. 40 **When secondary current increases, primary current also increases because of reduced primary reactance.**

or another for some purpose; they might be power transformers, input or output transformers, or interstage coupling transformers. A good understanding of the basic principles of transformers is essential to a good understanding of electronics.

14 WHY PRIMARY CURRENT INCREASES WHEN SECONDARY CURRENT INCREASES . . . Since the resistance of the primary winding of a power transformer is quite low, the amount of current taken by the primary is almost entirely determined by the reactance of the primary coil when the secondary is not loaded. This reactance is sufficient that the primary current will be quite low when there is no secondary current. However, when a load is connected across the secondary, the primary current will increase; and the greater the secondary current, the greater the primary current. We shall now see what causes the primary current to increase when the secondary is loaded.

Assume first that the switch *S* is opened in Fig. 40, so that the secondary current is zero. The alternating current flowing in the primary sets up a counter emf E_{cemf} across the primary winding that opposes the generator voltage E_g. Since the primary resistance is nearly negligible, E_{cemf} is approximately equal to E_g. E_{cemf} can never be much lower than E_g; if it were, then I_p would increase, which would increase the core flux and thus increase E_{cemf} almost to the value of E_g. The counter emf set up by any inductance whatsoever must nearly equal the voltage applied across the inductance if the coil resistance is negligible.

As long as the switch *S* is open, only a small primary current is needed to develop a counter emf equal to the generator voltage. When switch *S* is closed so that a secondary current flows, the current through the secondary will try to set up a core flux of its own. Since by Lenz's law an induced current always opposes the action that produced it, the magnetomotive force set up by the secondary current opposes the flux set up by the primary current. This is shown in Fig. 40. But the flux through the core cannot decrease in value. If it did, E_{cemf} would decrease, and this counter emf must always be approximately equal to E_g. Hence, the primary current I_p must increase in value so that the primary current produces a stronger magnetomotive force to overcome the magnetomotive force produced by the secondary current and thus maintain the core flux at its previous value. The higher the secondary current, the more the primary current must increase to accomplish this. As a result, the value of the primary current in a transformer is determined by the load on the secondary.

15 EFFECT OF SHORTED TURNS . . . Let's consider what happens when one turn of a transformer primary becomes shorted. It would at first seem that if we had a primary winding of 100 turns and one turn became shorted, the primary would then just act as a 99-turn winding. This is not the case, however. The reason is that the shorted turn now looks like a single-turn secondary winding around the core. Since this shorted single turn has almost zero resistance, the secondary current flow in it is very high. Since a high secondary current means a high primary current, the primary current will also be very high, causing the primary to overheat or burn out. Because of the overload condition caused by the shorted turn, the true transformer secondary will be able to deliver little power to its load.

A short in the secondary winding of a transformer would have the same effect as a short in the primary. No matter whether the short is in the primary or the secondary, it acts as another secondary carrying a very high current.

Now, a shorted turn is harmful not only in a transformer but in any inductor. For example, Fig. 41 shows that a shorted turn in an inductor will act as a transformer secondary. Let's assume that we have a simple inductor, as shown in Fig. 41(a). Now assume that one turn has become shorted as shown in Fig. 41(b). The insulation is broken between points *A* and *B* on the wire, so the bare wires touch and thus form a closed loop around the core. Figure 41(c) shows the equivalent circuit of an inductor with a shorted turn as being a closed loop around the core that is attached to the primary at one point.

The changing flux through the core of the inductor will induce a current into the loop just as if it were a secondary winding on a transformer. Because there is no resistance in the loop, except the resistance of the wire, the current through the loop will be high. The magnetic field from the

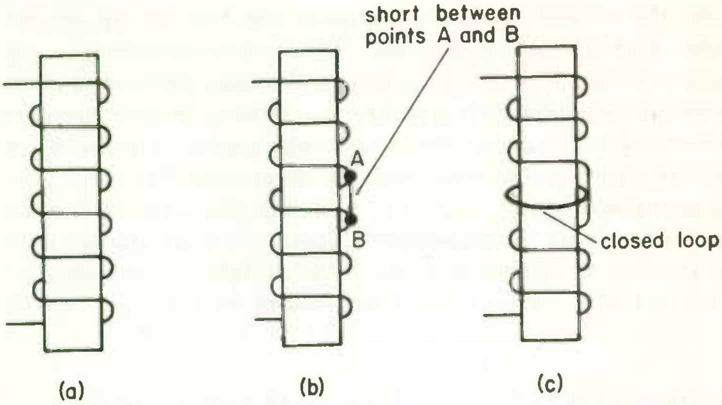

Fig. 41 A shorted turn in an inductor acts like a transformer secondary.

loop will be of such polarity as to oppose the magetic field that is produced by the primary winding. (We know this from Lenz's law, which you studied in an earlier lesson.) Because of the flux set up by the secondary, there will be a reduction in flux through the core and there will be a corresponding decrease in the inductive reactance of the primary. Therefore, the primary current will increase and heat up the winding. In addition, since the current through the loop is very high, a large amount of heat will be generated by it and will probably deteriorate the insulation on the adjacent windings. The end result will be a complete breakdown of the inductor.

16 POWER LOSSES IN A TRANSFORMER . . . Now that you are familiar with how the shorted turn in a transformer winding causes the primary current to increase, you can better see why laminations are necessary in the transformer construction. You already know that if a solid piece of iron were used to make the transformer core, *eddy currents* could flow in the core. The currents would flow in paths perpendicular to the magnetic path, and the core material would act as shorted turns. Since there would effectively be many shorted turns around the core, a high total value of eddy currents would flow, and thus the primary current would increase greatly to try to overcome the magnetic fields of the eddy currents. If the source feeding the transformer primary could deliver enough current, the end result could be a destruction of the transformer due to excessive heating of the core and the primary winding. For this reason, transformer cores are made up with laminations (several thin sheets of iron insulated from one another) rather than one solid iron core.

Hysteresis is another core power loss that you already know about. We mention it here to make this section on losses complete. Hysteresis losses result from the friction of the iron molecules, which first become aligned in one direction and then must turn around and become aligned in the other direction when an alternating magnetizing field is supplied. Hysteresis losses partly account for the fact that power transformers get warm during operation. Many transformers, such as those used in power supplies, get very warm to the touch during normal operation. This is usually normal and is not necessarily a sign of trouble. The transformer designer takes into account the temperature rise in the transformer during normal operation; he designs the transformer to withstand the heat.

A third type of loss that takes place in transformers is *copper loss*, which is due to the resistance of the wire used in winding the transformer. You know, of course, that every wire has resistance. Since current flows through this resistance, some power will be dissipated in the wire; it will be $P = I^2R$. For example, if the total resistance of a winding is 3 Ω, and the current through the wire is 2 A, the power dissipated in the wire will be $P = 2^2 \times 3 = 12$ W. None of the 12 W of power will serve a useful purpose; it will only heat the transformer. To make the transformer operate efficiently and without much copper loss, transformer designers use as large a wire size as is practical for the transformer winding.

To sum up, there are three main causes of power loss in transformers: eddy currents, hysteresis, and copper losses. These losses are dependent upon the physical construction of the transformer, and they must be considered by the transformer designer. We are not trying to show you how to design transformers, because that can get quite complex. We only want to point out where the various losses originate so that you will understand transformers better and so that you will know why it is not possible to obtain a 100 per cent transfer of power from the primary to the secondary. In other words, no practical transformer is perfect, so you can always expect that the power available from the secondary will always be slightly less than the power input to the primary. The efficiency of a well-designed power transformer is often more than 95 per cent.

17 FREQUENCY RESPONSE OF A TRANSFORMER . . . Power transformers are designed to operate at a specified frequency. Although they may operate with somewhat reduced efficiency at frequencies higher than the design frequency, they cannot usually be operated at a lower than design frequency. The counter emf developed by the primary must approximately equal the primary voltage. The lower the frequency, the higher the core flux must be for the flux threading the primary winding to change at a fast enough rate to develop the necessary counter emf. But the iron core becomes saturated after the flux reaches a certain density, so that a further increase in primary current cannot much increase the core flux.

Power transformers are generally so designed that the flux density at the design frequency is just below the saturation point. As a result, operating at a lower frequency than the design frequency causes a great increase in primary current, even though there is no secondary load, and overheats or burns out the transformer. Because of core saturation, the flux can't increase to the point where the counter emf nearly equals the applied primary voltage. Hence, the ohmic resistance of the primary winding, which is very low, becomes the main opposition to primary current flow.

Audio transformers must ideally operate successfully over the entire audio-frequency range, and the best audio transformers will in fact handle all frequencies from 20 Hz up to 20,000 Hz or so. However, transformers capable of handling this range of frequencies are bulky, heavy, and quite expensive if they are required to handle much power. Inexpensive audio transformers may have a frequency response from perhaps 150 up to 8000 Hz.

Audio-power-handling transformers must be bulky in order to have a low-frequency response, because there must be a large iron core to carry, without saturation, the heavy flux required to obtain an adequate counter emf at a low frequency.

Besides the low-frequency limitation, there is an upper frequency limit beyond which transformer response is not satisfactory. You will remember that any two conductors separated by a dielectric, or insulating material, form a capacitor. Therefore, even the turns of wire on the transformer core make up tiny capacitors. That is, there is some capacitance between each turn of wire and the adjacent turns of wire. In addition, there is capacitance between the wire and the transformer core itself; see Fig. 42. So at high frequencies, this capacitance shunts some of the a-c signal around the winding.

In other words, the high frequencies see not only the path through the transformer winding but also a parallel path shunting the winding through the capacitance of the transformer. This capacitance is distributed along the entire winding of the transformer, and it is therefore known as *distributed capacitance*. Since the reactance of the distributed capacitance gets lower and lower as the frequency gets higher, more and more of the applied signal gets shunted around the winding of the transformer as the frequency is increased. As a result, the output from the secondary of the transformer will decrease as the frequency is increased.

In addition to the fact that more of the signal is shunted around the windings at higher frequencies, the secondary voltage drops off as the

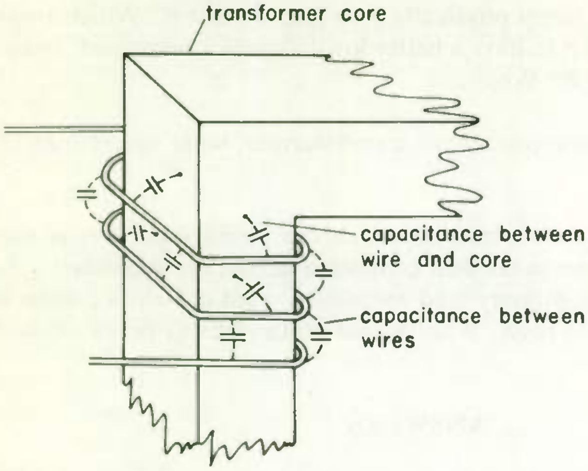

Fig. 42 Distributed capacitance in a transformer winding.

frequency is increased because there is an increase in hysteresis losses. You remember that hysteresis losses are due to molecular friction as the core molecules are aligned first in one direction and then in the other. Now, the amount of energy lost in the core due to this friction is the same for each cycle, regardless of the frequency. That is, a certain amount of work is required to align a molecule of core material first in one direction and then in the other. Let's say, for example, that the amount of power lost in aligning and realigning the molecules in a certain transformer core is 0.1 W at 100 Hz. Now if the frequency is increased to 200 Hz, the same molecules must be aligned and realigned twice as many times per second, so the power lost due to hysteresis at 200 Hz would be 0.2 W. The higher the applied frequency, the more power is lost due to hysteresis.

WHAT HAVE YOU LEARNED?

1. A certain transformer designed to operate at 400 Hz has a primary winding whose inductance is 0.1 H. Using the formula X_L = (a) ______, we find that the inductive reactance of the primary is (b) ______ ohms at 400 Hz. If the voltage applied to the primary were 100 V a-c, the primary current (with no load on the secondary) would be (c) ______ amperes.

2. Two transformers *A* and *B* have the same primary-to-secondary turns ratio. Each also has the same number of turns on the primary. Assume that both transformers are of the same type of construction except that

transformer A is much larger physically than transformer B. Which transformer would you expect to have a better low-frequency response? *(transformer A)(transformer B)* Why?

3. With no load on the secondary of a transformer, what determines the primary current?

4. You have a faulty transformer in which the primary current is very excessive even when there is no load connected across the secondary. An ohmmeter check of the primary and secondary windings shows them to have about normal resistance. What would you expect to be wrong with the transformer?

ANSWERS

1. (a) $2\pi fL$ (b) 251 . . . $X_L = 2 \times 3.14 \times 400 \times 0.1 = 251\ \Omega$. (c) 0.398 . . . $I = \dfrac{E}{X_L} = \dfrac{100}{251} = 0.398$ A.

2. Transformer A . . . The much larger physical size indicates that the inductance of the primary winding would be higher than that of transformer B, and therefore transformer A would operate better at low frequencies.

3. The impedance of the primary winding determines the primary current. With no load on it, the secondary winding will have no effect on the primary impedance. Therefore the primary impedance will be the only determining factor for a given applied voltage.

4. Either the primary or secondary probably has a shorted turn. The shorted turn would not normally be noticeable on an ohmmeter, because the resistance check measures the resistance of the total length of wire used to make the winding. The shorted turn merely shortens the length of the wire by the length of one turn. Since there are usually many turns on one winding, the change in length by one turn would be very difficult to determine by a resistance check.

$$\frac{1}{\frac{1}{2}+\frac{1}{3}}$$

.5 .33

$$\begin{array}{r} 1.2 \\ .83\overline{)1.000} \end{array}$$

APPLIED MAGNETISM AND PRACTICAL CAPACITORS

EXAMINATION

Circle the number of the correct answer for each question that follows. When you are finished, transfer the answers to the answer sheet by putting X's in the proper squares. When the graded answer sheet is returned to you, correct in this book any questions you may have missed. By doing so, you will have a record of the correct answers to all questions for review purposes.

1. Inductors of 2 H and 3 H are wired in series with no magnetic coupling between them. The total inductance of the circuit is
   (1) 0.667 H. (3) 2 H. [✓ (5) 5 H.]
   (2) 1.5 H. (4) 3 H. (6) 6 H.

2. Inductors of 2 H and 3 H are wired in parallel with no magnetic coupling between them. The inductance of the circuit is
   (1) 0.667 H. [illegible] 1.5 H. (5) 5 H.
   [✓ (2) 1.2 H.] (4) 2.5H.

3. Inductors of 2 H and 3 H are connected in series with their fields aiding. The mutual inductance between them is 1 H. The total inductance is
   (1) 2.5 H. (4) 4 H. (6) 6 H.
   (2) 3 H. (5) 5 H. [✓ (7) 7 H.]
   (3) 3.5 H.

4. Refer to Question 3. If the inductors are connected with their fields bucking, what will be the total inductance? (Select your answer from the choices for Question 3). (2)

5. If it is desirable to have minimum leakage flux from an inductor, the best type of inductor to use is a
   C✓ (1) coil of wire on a solid iron rod.
   [✓ (2) toroid.]
   [illegible] coil of wire on a rectangular laminated iron core.
   (4) coil wound on a hollow paper tube.

6. A certain transformer has 100 turns on the primary and 400 turns on the secondary. If 20 V is applied to the primary, what is the secondary voltage?
   C✓ (1) 5 V (2) 20 V (3) 40 V [✓ (4) 80 V]

C✓ 7. Refer to Question 6. If a load resistor were connected across the secondary so that the load current was 5 A, what would be the value of the load resistor? (Assume no losses in the transformer.)

(1) 1 Ω (2) 4 Ω (3) 8 Ω [✓ (4)] 16 Ω

C✓ 8. Refer to Questions 6 and 7. With these values of load resistance and turns ratio, what would be the primary impedance (primary voltage divided by primary current) as seen by a generator feeding the primary winding?

(1) 1 Ω [✓ (2)] 4 Ω (3) 16 Ω ~~(4)~~ 64 Ω (5) 256 Ω

C✓ 9. With no load across the secondary of a transformer, what limits the primary current?

(1) Hysteresis.
(2) The resistance of the primary winding.
(3) Reflected resistance of the secondary.
[✓ (4)] The inductive reactance of the primary winding.
(5) Nothing is needed. With no secondary current, the primary current is always zero.

C✓ 10. You connect a transformer with loaded secondary to a signal generator. As you increase the frequency of the generator, you find that the secondary voltage is constant up to about 30 kHz, and it then begins to decrease as the generator frequency is further increased. Since the voltage across the primary was held constant, why does the secondary voltage start to drop off?

(1) Because the primary current decreased.
[✓ (2)] The distributed capacitance of the windings is shunting some of the signal around the windings and the hysteresis losses have increased.
(3) The basic transformer formulas relating primary and secondary voltages hold only at audio frequencies.
(4) Skin effect is limiting the secondary current, so the secondary voltage must decrease.

11. A given transformer has a primary winding with a resistance of 0.5 Ω. If the primary current is 3 A, how much power is dissipated in the primary by copper losses?

(1) 0.5 W [✓ (2)] 4.5 W (3) 6 W (4) 13.5 W

12. How does a change in the dielectric constant of a capacitor dielectric material affect the capacitance?

(1) Raising the dielectric constant lowers the capacitance.
[✓ (2)] Raising the dielectric constant increases the capacitance.
(3) Changing the dielectric constant has no effect on the capacitance.
(4) Lowering the dielectric constant raises the capacitance.

13. Increasing the dielectric constant of a dielectric material from 3 to 6
    - (1) increases the capacitance by a factor of 4.
    - C✓ [✓ (2)] doubles the capacitance.
    - (3) has no effect on the capacitance.
    - (4) doubles the distance between plates and therefore halves the capacitance.

14. Increasing the number of plates of a capacitor
    - (1) increases the charge per unit area.
    - (2) allows electrons to move more rapidly from one plate to another.
    - (3) offsets the effect of a leaky dielectric.
    - [✓ (4)] increases the capacitance.

15. To determine the total capacitance of three capacitors connected in series, you would use the formula
    - (1) $C_t = C_1 + C_2 + C_3$
    - (2) $C_t = \dfrac{C_1 C_2 C_3}{C_1 + C_2 + C_3}$
    - [✓ (3)] $C_t = \dfrac{1}{\dfrac{1}{C_1} + \dfrac{1}{C_2} + \dfrac{1}{C_3}}$
    - (4) $C_t = \frac{1}{2} C_1 C_2 C_3$

16. C✓ If capacitors of 10, 6, and 14 μF are connected in series, the total capacitance is
    [✓ (1)] 2.96 μF. [✓ (2)] 3.5 μF. (3) 30 μF. (4) 6.32 μF.

17. If you have a lot of capacitors rated at 800 V and 4 μF each, how many would you use to give a combination rated at 3200 volts and 3.0 μF?
    (1) 4 (2) 9 (3) 8 [✓ (4)] 12

18. The d-c voltage drop across an individual capacitor of a group of capacitors connected in series is directly proportional to which of the following factors?
    - (1) Number of plates
    - C✓ [✓ (2)] Leakage resistance
    - (3) Number of capacitors
    - (4) Size of capacitor

19. When filter capacitors are connected in series, resistors of high value are often shunted across the individual capacitors. The purpose of the resistors is to
    - C ~~(1)~~ provide a second path for current flow.
    - ? (2) increase the effectiveness of the capacitors.
    - [✓ (3)] equalize the voltages across the capacitors.
    - ~~(4)~~ serve as additional dielectrics.

C

20. You have two identical capacitors of 0.1 μF each. One of these is charged to a potential of 350 V. This capacitor is then disconnected from the source and is connected in parallel across the second, uncharged capacitor. The voltage across the two capacitors in parallel will be
(1) 87.5 V. (2) 700 V. (3) 350 V. [✓ (4)] 175 V.

C

21. When you connect an electrolytic capacitor in a circuit, you must be careful to
[✓ (1)] connect the positive lead of the capacitor to the positive side of the line.
(2) make sure it is physically larger than an equivalent paper dielectric capacitor.
(3) make sure the capacitor is correctly shielded.
(4) see that the leads are brought out correctly.

C

22. If you have two electrolytic capacitors rated at 750 V, how would you connect them across a 1200-V source?
~~(1)~~ In parallel, making sure that polarity is correct.
~~(2)~~ Cannot be used with 1200-V source.
(3) In series, making sure polarity is correct—no other precautions are needed.
[✓ (4)] In series with proper polarity and a suitable equalizing resistor across each.

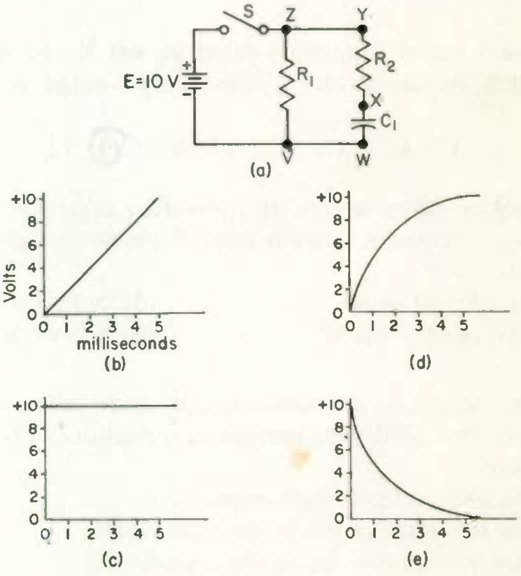

Fig. 43

C 23. Which graph of Fig. 43 correctly shows the voltage from point Z to point V in Fig. 43(a) after the switch is closed? (Switch is closed at time = 0 msec.)

[✓ (1)] (b) [✓ (2)] (c) (3) (d) (4) (e)

C 24. Refer to Fig. 43. Which graph correctly shows the voltage from point X to point W after the switch is closed?

(1) (b) (2) (c) [✓ (3)] (d) [✓ (4)] (e)

C 25. Refer to Fig. 43. Which graph correctly shows the voltage from point Y to point X after the switch is closed?

[✓ (1)] (b) (2) (c) [✓ (3)] (d) (4) (e)

C 26. If capacitors of 2, 6, and 10 μF are connected in parallel, the total capacitance will be

(1) 1.32 μF. (2) 6.0 μF. (3) 4.29 μF. [✓ (4)] 18 μF.

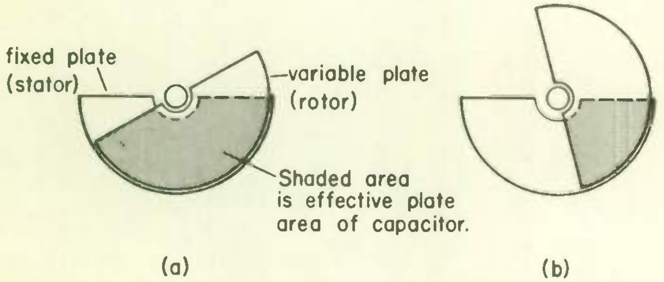

Fig. 44

C 27. Figure 44 shows two plates of a variable capacitor. Suppose when the plates are in the position of Fig. 44(a), the capacitance of the capacitor is 200 pF. The capacitor is then connected to a 30-V battery, which charges the capacitor. The battery is then disconnected. Next, the plates are rotated to a new position shown in Fig. 44(b). Which of the following voltages could you expect to read across the plates in Fig. 44(b)?

[✓ (1)] 0 V (2) 15 V (3) 30 V (4) 60 V (5) 120 V

END OF EXAM

$$C = \cfrac{1}{\cfrac{1}{10 \quad 6 \quad 14}}$$

$$\frac{1}{.1 \quad .167 \quad .071}$$

$$\begin{array}{r} 2.9 \\ .338 \overline{) 1.00000} \\ 1014 \end{array}$$

$$\begin{array}{r} .16 \\ 6 \overline{) 1.00} \end{array}$$

$$\begin{array}{r} .0714 \\ 14 \overline{) 1.0000} \\ \underline{98} \\ 20 \\ 60 \end{array}$$

CHARACTERISTICS OF COMMONLY USED CAPACITOR DIELECTRICS

Dielectric	Cost per volt-farad	Normal frequency Range	Range of capacitance	Voltage rating, up to	Temp. limit, °C		Variation of capacitance with temperature	Leakage resistance	Capacitance for given physical Size	Remarks
					Min	Max				
Mica	High	100 Hz to 10,000 MHz	Few pF to few hundred pF	Several kV	No limit	+ 200	Low	High	Low	Used in high-frequency circuits requiring fairly good temperature stability and low loss. Wide temperature range and good long-term reliability.
Ceramic	Medium	100 Hz to 10,000 MHz	Few pF to few tens of thousands of pF	Several KV	− 100	+ 120	High	Medium	Medium	Used where fairly inexpensive reasonably small size capacitors are needed if temperature variation is not important.
Plastic	High, but lower than mica	D-c to 10,000 MHz	Few pF to few μF	Several KV	− 60	+ 125	Low	Very high	Medium	Used where very good temperature stability and high leakage resistance are required. Replacing paper and ceramics in many applications.
Paper (including oil-filled and wax-impregnated)	Medium	100 Hz to 1 MHz	Few pF to few μF	Several KV	− 20	+ 125	Medium	High	Medium	Available with wide variety of impregnants. Characteristics vary greatly with different impregnants. Oil-filled types are very rugged and reliable, although large in size.
Electrolytic	Very low	10 Hz to 10 KHz	Few μF to several thousand μF	Several hundred volts	− 40	+ 70	High	Low	High	Commonly used as power supply filter or coupling capacitor for transistor circuits. Capacity substantially reduced at low temperatures for d-c only.
Tantalum	Low	D-c to 1 KHz	Few tenths of μF to several hundred μF	Few hundred volts	− 80	+ 85	Low	Very high	Very high	Used where high capacitance in small physical size is needed. Characteristics generally better than electrolytics but cost is higher. For d-c only.

CLEVELAND INSTITUTE OF ELECTRONICS / CLEVELAND, OHIO

electronics

CLEVELAND INSTITUTE OF ELECTRONICS / CLEVELAND, OHIO

YOUR PROGRESS REVIEW
. . . and FCC License Check
Part II

3732-2

ABOUT THE AUTHOR

Radio, TV, and electronics technicians today know that an F.C.C. license is the key to a better job, better pay, and a better future. This guide for preparing for the F.C.C. examinations is not only a direct, well-organized guide to passing them but also a review designed to sharpen your grasp on electronics.

The author provides in this review answers to all the questions of the type usually asked in the examinations and also includes discussions of these answers. The materials and methods presented are those which proved most effective in ten years' use with over 50,000 prospective licensees.

In addition, Mr. Geiger, whom you've read about in earlier lessons, has simplified diagrams and included operating principles for each circuit to make them easier to learn; to highlight basic principles; and to help you handle variations in circuits.

Accredited by the Accrediting Commission of the National Home Study Council

The Accrediting Commission has been approved by the U.S. Office of Education as a "nationally recognized accrediting agency".

CLEVELAND INSTITUTE OF ELECTRONICS

YOUR PROGRESS REVIEW
. . . and FCC License Check
Part II

By DARRELL L. GEIGER
Senior Project Director
Cleveland Institute of Electronics

3732-2

In this lesson you will learn . . .

FRONTISPIECE: *Tracing digital computer circuitry.* Courtesy, Tech Serv Inc.

FOURTH EDITION/Third Revised Printing/May, 1967.

A chat with your instructor

The questions and answers that follow review the principles learned in the preceding lessons, and they also include some new material not previously covered. How well you do in the lessons to come depends a great deal on how well you understand all the preceding lessons in your training program. Hence, this review is important. Don't look at a review as just relearning what you have forgotten. If you study these questions and answers with care, you should understand many concepts better than you ever did before.

All the material in this review is on subjects that may be used in an FCC license examination, so these questions and answers are particularly important to anyone preparing for an FCC license.

YOUR PROGRESS REVIEW

...and FCC License Check

Part II

1 A-C CIRCUITRY

3.201 *Draw a circuit composed of a voltage source of 100 volts, 1000 cps, a 1-μf capacitor in series with the source, and a T network composed of a 2-mh inductor, a 100-ohm resistor, and a 4-mh inductor. The load resistor is 200 ohms.*

Question a *What is the total current and what is the current through each circuit element?*

b *What is the voltage across each circuit element?*

c *What "apparent" power is being consumed by the circuit?*

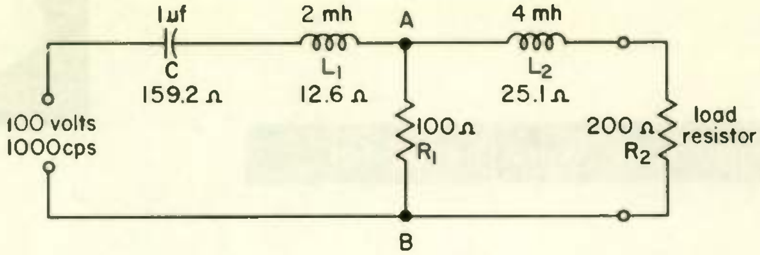

Fig. 3.201A **Figure for Question 3.201 showing reactance values.**

d *What real or actual power is being consumed by the circuit? By the 200-ohm resistor?*

Answer a To find the total current, and the current through each element, the reactances of C, L_1, and L_2, Fig. 3.201A, must first be found:

$$X_C = \frac{1}{2\pi fC} = \frac{1}{6.28 \times 1000 \times 1 \times 10^{-6}} = 159.2\,\Omega$$

$$X_{L1} = 2\pi fL = 6.28 \times 1000 \times 2 \times 10^{-3} = 12.6\,\Omega$$

$$X_{L2} = 2\pi fL = 6.28 \times 1000 \times 4 \times 10^{-3} = 25.1\,\Omega$$

The next step is to do what we can to simplify the circuitry. Note that C and L_1 are in series. Since the voltage across C lags the current, while the voltage across L_1 leads the current, the two reactances oppose each other, so that the net reactance is 159.2 - 12.6 = 146.6 ohms. Thus C and L_1 in series are equivalent to a single capacitor with a reactance of 146.6 ohms, C_{eq} in Fig. 3.201B.

In Fig. 3.201A L_2 and R_2 are shown in series. When a reactance and a resistance are in series and the ohmic value of one is many times that of the other, the combined value is approximately equal to the larger of the two reactances. Thus, since R_2 is many times the reactance of L_2, the combined impedance of R_2 and L_2 is approximately 200 ohms.

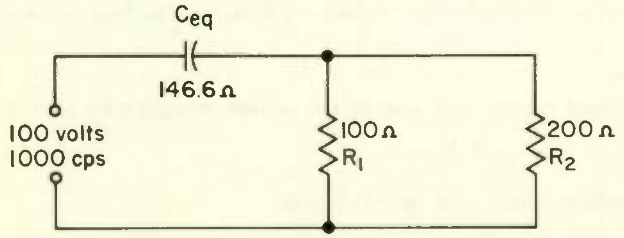

Fig. 3.201B **Simplified circuit for Question 3.201.**

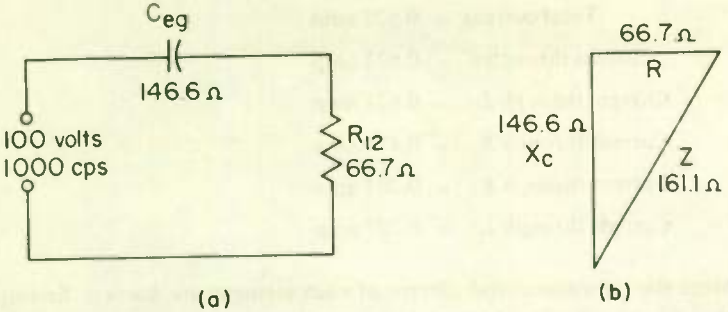

Fig. 3.201C (a) Equivalent circuit of Fig. 3.201B. (b) Impedance diagram for circuit.

That is, we can leave out L_2, as we have in Fig. 3.201B, for the purpose of computing circuit currents.

In Fig. 3.201B, R_1 and R_2 are drawn in parallel. Their combined resistance is

$$R_{12} = \frac{R_1 \times R_2}{R_1 + R_2} = \frac{100 \times 200}{100 + 200} = 66.7\ \Omega$$

Hence, Fig. 3.201C(a) is a circuit equivalent to the one in Fig. 3.201B. Its impedance can be found from the impedance triangle of Fig. 3.201C(b), and it is 161.1 ohms. By Ohm's law, we can now find the total circuit current as

$$I_t = \frac{E}{Z} = \frac{100}{161.1} = 0.621 \text{ amp}$$

We can also now find the voltage drop across R_{12}:

$$E_{12} = I_t \times R_{12} = 0.621 \times 66.7 = 41.4 \text{ volts}$$

That is, a voltmeter connected between points A and B in Fig. 3.201A will read 41.4 volts. Finally, we can find the currents through R_1 and R_2:

$$I_1 = \frac{E_{12}}{R_1} = \frac{41.4}{100} = 0.414 \text{ amp}$$

$$I_2 = \frac{E_{12}}{R_2} = \frac{41.4}{200} = 0.207 \text{ amp}$$

In summary, the currents in the circuit of Fig. 3.201A are:

Total current = 0.621 amp

Current through C = 0.621 amp

Current through L_1 = 0.621 amp

Current through R_1 = 0.414 amp

Current through R_2 = 0.207 amp

Current through L_2 = 0.207 amp

Answer b Since the impedance and current of each element are known, finding the voltage across each circuit element is merely a matter of using Ohm's law to find the element voltages:

$$\text{Voltage across } C = E_c = IZ = 0.621 \times 159.2 = 98.86 \text{ volts}$$

$$\text{Voltage across } L_1 = 0.621 \times 12.6 = 7.82 \text{ volts}$$

$$\text{Voltage across } R_1 = 0.414 \times 100 = 41.4 \text{ volts}$$

$$\text{Voltage across } L_2 = 0.207 \times 25.1 = 5.20 \text{ volts}$$

$$\text{Voltage across } R_2 = 0.207 \times 200 = 41.4 \text{ volts}$$

Answer c The apparent power used by the circuit is simply the product of the voltage and the current:

$$\text{Apparent power} = E \times I = 100 \times 0.621 = 62.1 \text{ watts}$$

Answer d Since neither inductance nor capacitance, but only resistance, uses actual power, the power used by the circuit is the sum of the power used by R_1 and by R_2.

$$P_1 = I_1^2 R_1 = 0.414^2 \times 100 = 17.14 \text{ watts}$$

$$P_2 = I_2^2 R_2 = 0.207^2 \times 200 = 8.57 \text{ watts}$$

$$P = 17.14 + 8.57 = 25.71 \text{ watts}$$

Hence, the true power used by the circuit is 25.7 watts, and the power used by the 200-ohm resistor is 8.57 watts.

Question 3.202 *In what way are electrical properties of common circuit elements affected by electromagnetic fields? Are interstage connecting leads susceptible to these fields?*

Answer Electric and magnetic fields may induce energy into components and circuitry within the range of the fields. That is, stray fields can cause unintended electrical coupling between different parts of electronic circuitry. This may interfere with proper operation. In particular, if the signal is fed back through stray fields to a point in the circuit at lower signal level, the circuit may oscillate.

Leads to tubes and transistors in stages where the signal level is low are particularly prone to pick up stray fields. The problem can be minimized by keeping the leads as short as possible, by dressing the leads close to the chassis, and by so designing the layout that input and output circuitry are well removed from each other.

Interstage connecting leads are particularly subject to undesired coupling from stray fields at the higher r-f frequencies. In low-signal-level vhf and uhf circuits, it is particularly important to dress leads exactly as in the original layout or as directed in the manufacturer's instructions.

Question 3.203 *What does "coefficient of coupling" mean?*

Answer The coefficient of coupling is a measure of the degree of coupling between two inductors. Its numerical value ranges between 0 and 1. When there is no coupling between two inductors (that is, when none of the lines of force set up in either coil thread the other coil), the coefficient of coupling is zero. When all the lines of force set up by the two coils thread each other, the maximum possible amount of coupling exists. The coefficient of coupling is then 1.

Question 3.204 *An audio transformer has a resistive load connected across its secondary terminals. What is the relationship between this resistance, the turns ratio, and the input impedance at the primary terminals? How is this principle useful in matching impedances?*

Answer The input impedance seen looking into the primary winding is equal to the load impedance divided by the square of the turns ratio. Suppose, in Fig. 3.204, that the secondary has 800 turns and the primary, 400 turns and that the load resistance is 300 ohms. The turns ratio is $800/400 = 2$. Therefore, the input impedance to the primary is $300/2^2 = 75$ ohms. Note that the winding with the most turns has the highest impedance.

A transformer can be used as an impedance-matching device by using the right turns ratio. Suppose that a tube with a plate impedance of 4000 ohms is to be matched by the use of a transformer to a loudspeaker with an impedance of 10 ohms. The tube is matched to the primary of the transformer if the impedance seen looking into the primary is 4000 ohms. By the formula of Fig. 3.204:

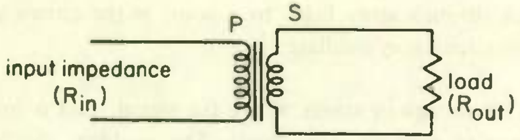

$$\frac{R_{out}}{R_{in}} = \frac{(\text{turns, secondary})^2}{(\text{turns, primary})^2} = (\text{turns ratio})^2$$

Fig. 3.204 Relationship between input and output impedances and turns ratio in an audio transformer.

$$\frac{R_{\text{out}}}{R_{\text{in}}} = (\text{turns ratio})^2$$

$$\frac{10}{4000} = (\text{turns ratio})^2$$

$$\text{turns ratio} = \sqrt{\frac{10}{4000}} = \sqrt{\frac{1}{400}} = \frac{1}{20} = 1{:}20$$

Hence, the tube is matched to the speaker by using a transformer with 20 times as many turns on the primary as on the secondary.

2 ELECTRON TUBES

3.205 *Discuss the physical characteristics and a common usage of each of the following electron tube types:*

Question a *Diode*
b *Triode*
c *Tetrode*
d *Pentode*
e *Beam power*
f *Remote cutoff*
g *Duotriode*
h *Cold cathode*
i *Thyratron*

Answer a The diode electron tube contains two elements: a cathode and anode (plate). In operation, electrons emitted from the diode cathode are attracted to the anode when the anode is positive with respect to the cathode.

There are four basic classes of electron tube diodes: high-vacuum, gaseous, mercury-arc, and voltage regulator. The high-vacuum diode is the most common one; it consists of a heated cathode, or filament, surrounded by a cylindrical anode. High-vacuum diodes are used primarily as radio-frequency and audio-frequency signal detectors and power supply rectifiers.

The gaseous diode is similar in construction to the high-vacuum diode, the difference between the two being that the gaseous diode contains a small amount of mercury vapor, neon, or argon. The presence of one of these gases in the diode greatly lowers the internal resistance of the diode during conduction owing to the ionization of the gas.

Because of their lower internal resistance, and hence lower internal voltage drop, gaseous diodes are capable of handling higher currents with greater efficiency as compared with the high-vacuum diode. They are used as power supply rectifiers.

The mercury-arc diode, commonly known as an ignitron, makes use of the characteristics of a mercury-arc discharge to obtain rectification. It has an extremely low impedance when in the conducting state. Mercury-arc rectifiers are used in extremely high current applications ranging up into the thousands of amperes. The mercury-arc diode is enclosed in a metal envelope.

A voltage-regulator diode consists of a central anode wire surrounded by an outer cathode. When filled with neon or argon, the voltage regulator diode has a constant voltage drop when conducting. It is used to stabilize the output voltage of power supplies.

Answer b The triode electron tube contains three elements: a heated cathode (or filament), a control grid, and an anode (plate). The control grid, consisting of a closely spaced spiral of fine wires formed into a cylindrical shape, surrounds the cathode (or filament). The cathode and control grid are, in turn, surrounded by the solid, cylindrical metallic anode (plate). In operation, electrons emitted by the cathode (or filament) are attracted to the positively charged anode. En route to the anode, the electrons emitted from the cathode pass through the control grid mesh.

By applying a voltage between the triode control grid and cathode, it is possible to vary the number of electrons going through the grid mesh to the anode, and hence the amount of current flowing from cathode to anode. As the control grid is made more negative with respect to the cathode, fewer electrons reach the anode, and vice versa.

Depending upon the current to be handled, triode electron tubes may range in size from subminiatures only a fraction of an inch in length to large transmitting tubes several feet in length. Regardless of the physical size, however, the basic internal arrangements of the triode elements are the same.

Triodes may have either a filament-type cathode or an indirectly heated cathode. The filament-type cathode consists of a wire filament heated to an electron-emitting temperature by the passage of current through it. The filament is coated with a metallic oxide, such as thorium oxide, so as to emit electrons at lower temperatures than would otherwise be needed.

An indirectly heated cathode consists of a heater assembly surrounded by a sleeve coated with suitable electron-emitting oxides. This sleeve is electrically insulated from the heater. In operation, current supplied to the heater raises the heater temperature sufficiently to heat the oxide-coated cathode sleeve to its electron-emitting temperature. Indirectly heated cathodes are used primarily on low-power triodes, while directly heated filaments are used in high-power triodes.

Triode electron tubes are used as a-f and r-f voltage and power amplifiers, a-f and r-f oscillators, r-f frequency multipliers, and r-f signal detectors.

Answer c The tetrode electron tube is similar to the triode with the exception that a second grid is interposed between the control grid and anode (plate). This second grid, known as the screen grid, possesses a coarser mesh than the control grid, so that most of the electrons easily pass through it on their way to the anode. Thus, although the screen grid is maintained at a positive potential with respect to the cathode, as is the anode, the screen grid current is only a fraction of that of the anode.

The main purpose of the tetrode screen grid is to shield, or "screen," the control grid from the anode. In a triode, an appreciable amount of capacitance exists between the control grid and anode. This grid-plate interelectrode capacitance serves as a signal feedback path, so that a triode cannot be used as a common-cathode r-f amplifier without neutralization. In a triode r-f amplifier without neutralization, the triode grid-plate capacitance will feed the r-f signal appearing in the triode plate circuit back into the grid circuit, causing oscillations.

Ordinary tetrodes, sometimes called screen grid tubes, are usually used today as power amplifiers in transmitters.

Answer d In the tetrode, electrons striking the anode usually knock out electrons from the anode material. These "secondary electrons" are attracted back to the screen grid during that part of the cycle when the plate is negative with respect to the screen. This secondary emission results in an undesirable distortion of the tetrode operating characteristics under certain operating conditions.

In the pentode electron tube a third grid, called a "suppressor" grid, is interposed between the screen grid and anode. In operation, the suppressor grid is maintained at, or near, cathode potential. Therefore, it acts as a shield between the screen and anode, "suppressing" the screen grid's attraction of secondary electrons knocked out of the anode. Another important characteristic of the pentode is that its plate current remains essentially constant for changes in plate voltage.

The pentode is used as a voltage and power amplifier for audio and radio frequencies, or in a-f and r-f oscillators, and as an r-f signal detector.

Answer e The beam-power electron tube is similar to the tetrode in that two grids are employed; they are a control grid and a screen grid. However, whereas a pentode uses a suppressor grid to eliminate the effects of secondary emission, the beam-power tube uses a pair of beam-forming plates to concentrate the electron stream from the cathode into a narrow beam. The action of these beam-forming plates and the alignment of the control and screen grids eliminate the problems of secondary emission. The beam-power tube has the characteristic of high power sensitivity; that is, a small change in control grid voltage will control a relatively large amount of power through the tube. Also, the beam-power tube is capable of drawing relatively large amounts of plate current at low plate voltage.

The beam-power tube finds application in a-f and r-f power amplifiers.

Answer f The remote-cutoff electron tube is a specific type of pentode in which the amplification factor decreases with increasing grid bias. This change is accomplished by a special control grid construction whereby the spacing between adjacent turns of the control grid varies, being greater in the middle than at the ends.

The remote-cutoff pentode is used primarily in automatic-gain-controlled r-f and i-f voltage amplifiers in receiving equipment.

Answer g Duotriode electron tubes consist of two individual triodes contained within a single glass or metal envelope. Depending upon their intended application, duotriodes may have either similar or dissimilar characteristics.

Duotriodes are used in place of two separate triodes to save space and cost.

Answer h Cold-cathode electron tubes are of the gaseous type, and they have cold rather than heated cathodes. These tubes depend upon the ionization of the gas within them for their operation, and they have the characteristics of a very low internal voltage drop. Although the construction of cold-cathode tubes may vary, the most common arrangement consists of a centrally located anode wire and either an outer circular cathode or a cathode disk placed around the anode.

Applications for cold-cathode tubes include relay control, voltage regulators, cathode-ray tube sweep generators, and power supply rectifiers.

Answer i Thyratron electron tubes are a specialized type of gaseous electron tube which contain either a heated or a cold cathode, a control grid, and an anode. In operation, with normal operating voltages applied, the thyratron will not conduct with its control grid maintained at a negative voltage with respect to its cathode. As the control grid voltage is dropped to zero, the gas within the thyratron will ionize, and current will flow from the cathode to anode. Once the thyratron is conducting, the control grid has no further control over plate current, which can be interrupted only by removing the anode supply. Certain types of thyratrons contain a shield grid which is normally tied externally to the cathode. This shield grid improves the stability of the thyratron.

Major thyratron applications include relay controls, cathode-ray tube sweep generators, and power supply output-voltage controls.

Question 3.206 *What is the principal advantage of a tetrode tube over a triode tube as a radio-frequency amplifier?*

Answer The tetrode tube, owing to the presence of its screen grid, which acts as a shield between the control grid and plate, essentially eliminates capacitance between the control grid and plate. This capacitance would act as a signal feedback between grid and plate and cause oscillation if the r-f amplifier were not neutralized. Refer to Answer 3.205(c).

Question 3.207 *Compare tetrode tubes to triode tubes in reference to high plate current and interelectrode capacitance.*

Answer Because of the presence in the tetrode of the screen grid, which accelerates the electrons on their way from the cathode to the anode, the tetrode is capable of handling greater plate current at lower voltages than a comparable triode can handle.

The presence of the screen grid in the tetrode greatly reduces the grid-plate interelectrode capacitance, making the tetrode more suitable than a triode in r-f amplifier applications. See Answer 3.205(c).

Question 3.208 *Draw a simple circuit diagram of each of the following devices and describe the operation. Show a signal source and indicate coupling and bypass capacitors, power supply connections, and plate load.*

a *An a-f grounded-cathode triode amplifier with cathode resistor biasing, as for class A operation*

b *An a-f grounded-cathode pentode amplifier with battery biasing for class A operation*

c *An r-f grounded-grid triode amplifier with LC-tank plate load for class B operation*

d *An a-f cathode-follower triode amplifier*

e *An a-f push-pull pentode amplifier, operated class B with transformer coupling to a speaker*

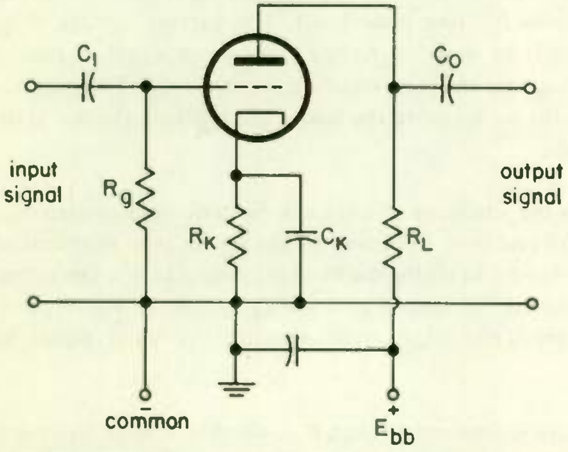

Fig. 3.208A An a-f grounded-cathode triode amplifier.

Answer a Fig. 3.208A is the schematic diagram of a basic grounded-cathode voltage-amplifier stage employing cathode bias. The input signal to be amplified is applied between the control grid and cathode (through C_k). Capacitor C_1 serves as a blocking capacitor to prevent any d-c voltage superimposed on the a-c signal from being applied to the control grid. R_g forms a d-c path between grid and cathode and provides a path for biasing the grid.

Operating bias for the stage is provided by the cathode bias resistor R_k. The plate current flowing through R_k develops a voltage drop across R_k which places the cathode positive with respect to the control grid by an amount equal to the required control grid bias voltage. (Making the cathode positive with respect to the grid is the same as making the grid negative with respect to the cathode, so the proper conditions for negative grid bias have been fulfilled.)

The cathode resistor is bypassed with a capacitor C_k. Since R_k is in series with the plate current, a-f signal variations in plate current will flow through it. Without C_k connected across R_k, these variations in plate current flowing through R_k would cause the bias to vary at the signal frequency rate. This would produce degenerative feedback which would reduce the stage gain. With C_k connected across R_k, these signal current variations flow around R_k, rather than through it, and the stage gain is increased. C_k should be chosen to have a low reactance at all a-c signal frequencies to be handled by the stage.

The signal applied to the control grid causes the plate current to vary in accordance with it. These variations in plate current produce a varying voltage drop across R_L (the plate load). The varying voltage drop across R_L, which is an amplified replica of the input signal, is passed on to the stage load via the plate coupling capacitor C_o. The purpose of C_o is to pass the a-c signal to the load while blocking the d-c plate voltage of the tube.

Answer b Figure 3.208B is the schematic of a class A pentode voltage amplifier with fixed control grid bias. In operation, the signal to be amplified is applied to the control grid via the d-c blocking capacitor C_i. Operating fixed bias is applied to the control grid via R_g by battery B_1. R_g prevents the low impedance of B_1 from shorting the input signal to ground.

Screen grid voltage is obtained through R_{g2}, which is selected to have a voltage drop such as to provide the correct value of screen voltage. Signal frequencies on the screen grid are bypassed to ground by C_{g2}. The value of this capacitor must be such as to provide a low impedance to the lowest frequencies being handled by the stage.

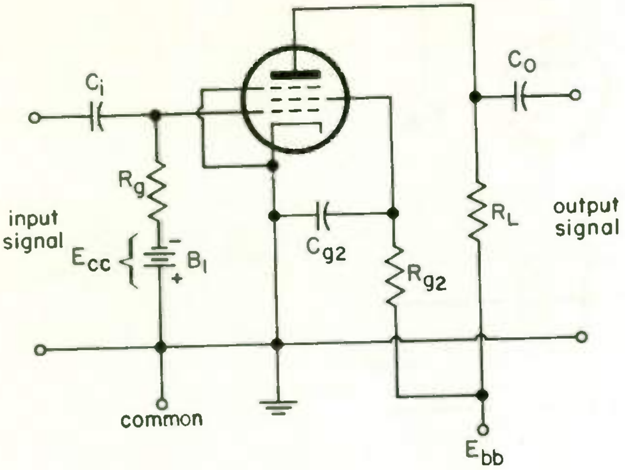

Fig. 3.208B **Pentode amplifier with fixed bias.**

Answer c Figure 3.208C is the schematic diagram of a class B grounded-grid r-f amplifier. The r-f signal to be amplified (E_{in}) is applied to the cathode via the r-f coupling transformer T. The control grid is maintained at r-f ground potential by the action of C_{cg}, which presents a low impedance to the signal being amplified. Control grid bias supply E_{cc} biases the tube to cutoff, as required for class B operation.

The r-f signal applied to the cathode causes the cathode voltage to vary with respect to ground at the r-f signal rate. Since the control grid is at ground potential for the r-f signal, the cathode-to-grid voltage will vary at the r-f signal frequency rate. This variation in cathode-to-grid potential will cause a corresponding change in plate current.

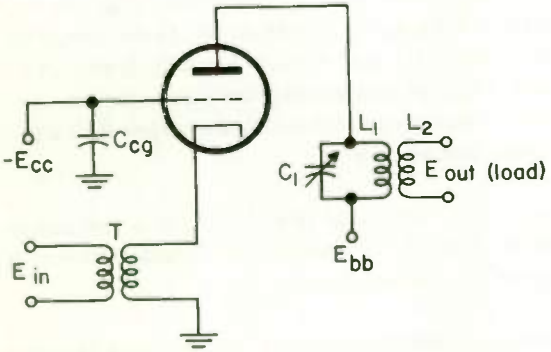

Fig. 3.208C **Grounded-grid class B r-f amplifier.**

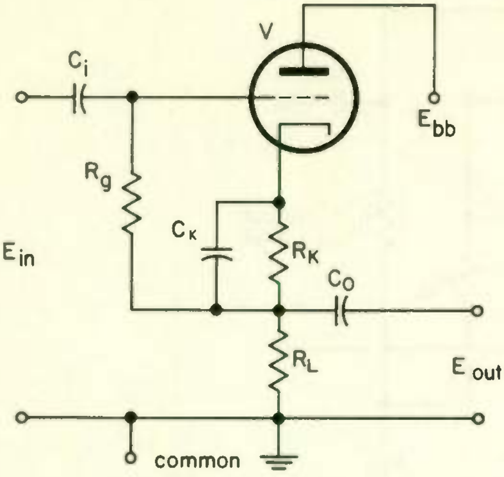

Fig. 3.208D **An a-f cathode-follower triode amplifier.**

The changes in plate current are applied to the parallel-resonant *LC* tank circuit, L_1-C_1. Although the tube is biased for class B operation and hence conducts only on half-cycles of applied signal, the "flywheel effect" of the tank circuit transforms these half-cycles of plate current into a sinusoidal waveform. (Note that this single-tube class B arrangement cannot be used at audio frequencies.)

Answer d Figure 3.208D is the schematic diagram of an a-f triode cathode-follower amplifier. In operation, the input signal is applied to the control grid via the d-c blocking capacitor C_i. Operating bias for the stage is obtained by the voltage drop across R_k as the result of plate current flowing through R_k. Capacitor C_k bypasses the a-f component of plate current around R_k.

Instead of being in the plate circuit as in a conventional stage, the load of the cathode follower is in the tube cathode circuit. In the case of the circuit of Fig. 3.208D, R_L is the load resistor. Since the load is in the cathode circuit, a high degree of degenerative feedback is present. As a result, the voltage gain of the cathode follower is always less than unity. However, the tube has a high power gain.

The cathode follower has a high input impedance and a low output impedance. Because of these characteristics, the cathode follower is often used as an impedance-matching device.

Answer e Figure 3.208E is the schematic diagram of a pentode class B audio amplifier. In operation, the signal to be amplified is applied to the

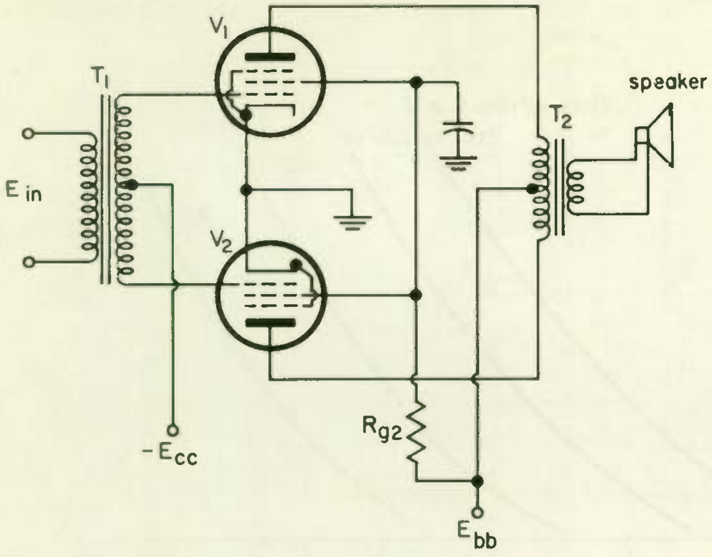

Fig. 3.208E Pentode class B amplifier.

primary of the input transformer T_1. The center-tapped secondary of T_1 applies signals to the grids of V_1 and V_2, which are 180° out of phase.

V_1 and V_2 are biased for class B operation. In this class of operation, V_1 and V_2 plate currents are cut off in the absence of an input signal voltage to their control grids. Because of the 180° out-of-phase signals applied to the grids of V_1 and V_2 from T_1, V_1 and V_2 alternately conduct plate current during the time when their grids are driven out of cutoff by alternate positive half-cycles of the input signal. The resulting half-cycles of plate current from V_1 and V_2 are combined in the primary of the output transformer to form an output at the secondary which is an amplified facsimile of the original input signal.

Question 3.209 *What kind of vacuum tube responds to filament reactivation, and how is reactivation accomplished?*

Answer Reactivation is practical only with thoriated-tungsten filaments. First the plate voltage is removed. Then the filament is subjected to a voltage 2 or 3 times higher than normal for 20 sec. The voltage is then reduced to 20 per cent above normal for a period of 30 min.

3.210 *Draw a rough graph of plate current vs. grid voltage (I_p vs. E_g) for various plate voltages on a typical triode vacuum tube.*

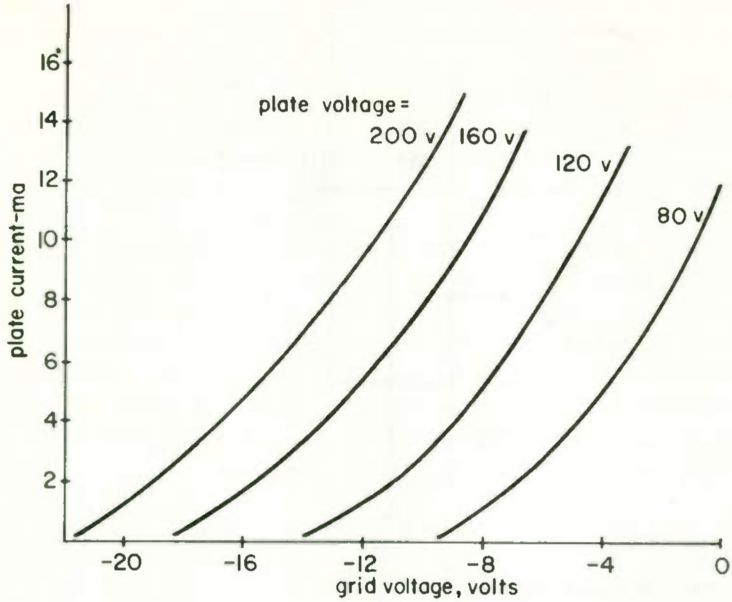

Fig. 3.210 Graph of plate current vs. grid voltage for various values of plate voltage.

Question a *How would the output current vary with input voltage in class A amplifier operation? In class AB operation? In class B operation? In class C operation?*

b *Does the amplitude of the input signal determine the class of operation?*

c *What is meant by "current-cutoff" bias voltage?*

d *What is meant by plate-current "saturation"?*

e *What is the relationship between distortion in the output current waveform and:*

1. The class of operation

2. The portion of the transfer characteristic curve over which the signal is operating

3. Amplitude of the input signal

f *What occurs in the grid circuit when the grid is driven positive? Would this have any effect on biasing?*

g *In what way is the output current related to the output voltage?*

Answer a See Fig. 3.210 for the graph. In an amplifier designed for class A operation the control grid biasing is so adjusted that the plate current of the tube (or tubes in the case of a push-pull stage) flows during all portions of the applied input signal waveform. Since the class A amplifier is biased to operate over the linear portion of its dynamic characteristic curve, its output current will be a facsimile of the input signal waveform.

In the class AB_1 amplifier, negative grid bias is set higher than for class A operation. This permits the plate and screen grid voltages of the tubes to be higher than in straight class A operation. The reason for this is that the increased negative grid bias holds the plate and screen grid currents within the limit of the tube dissipation rating. This arrangement provides higher efficiency as compared with straight class A operation. No grid current flows during any portion of the applied input signal waveform in the class AB_1 amplifier.

In class AB_2 operation, control grid bias and incoming signal amplitude are so set the grids draw current during the peak excursion of the input signal waveform. As a result, unlike class A and AB_1, the class AB_2 amplifier consumes power from the source supplying its input signal. The plate current of a class AB_2 amplifier stage fluctuates widely with variations in applied input signal, being at a maximum at high input signal levels. Class AB_1 and AB_2 operation are used principally in audio-frequency power amplifiers. Both the class AB_1 and class AB_2 amplifiers employ two tubes connected in push-pull. The push-pull connection removes most of the distortion introduced by the individual tubes. In a properly adjusted class AB_1 or class AB_2 amplifier, output current (signal) is an acceptable duplicate of the input signal.

Class B operation employs two tubes connected in push-pull. Operating control grid bias is so set that no plate current flows in the absence of an input signal. When a push-pull input signal is applied to the control grids of the class B stage, each of the two tubes conducts plate current only during the half-cycle when its grid is driven out of cutoff on alternate positive half-cycles of the input signal. The alternate half-cycle plate current outputs of the two tubes are combined in the center-tapped output transformer primary. This primary is connected between the plates of the tubes and B+ to form an output signal across its secondary which is a replica of the input signal. Depending upon the tube type, grid current will flow during either all or a large portion of the applied input signal.

Plate current in a class B stage has large excursion, ranging from zero with no input signal to rated value with the maximum value of input signal.

In class C operation, control grid bias is set at well beyond cutoff. Under these conditions, plate current is zero with no input signal. With an input signal, plate current flows for considerably less than half of each cycle. The plate current flow is in the form of a series of pulses whose frequency depends upon the frequency of the applied input signal.

Class C amplifiers are not suitable for use as audio-frequency amplifiers because the output waveform would then bear no resemblance to the input-signal waveform. They are used as r-f amplifiers, where their load is in the form of an *LC* resonant circuit. The "flywheel" action of the resonant circuit converts the plate current pulses of the class C amplifier into a sinusoidal waveform. The efficiency of a class C amplifier is greater than that of either class A or class B amplifiers.

Answer b The class of operation is determined by the amount of bias on the grid as it affects the part of the cycle during which plate current does not flow. The bias is set sufficiently negative, that plate current flows during the entire cycle for class A operation, one-half of each cycle for class B operation, and substantially less than one-half for class C operation. While the amplitude of the input signal does not determine the class of operation, the required input signal amplitude varies with the class of operation. Signal amplitude is kept low for class A operation to keep operation on the straight portion of the characteristic curve and thus prevent distortion. Signal amplitude should be higher for class B operation and highest of all for class C operation, in which the signal must be of sufficient amplitude to overcome the high negative grid bias.

Answer c Current-cutoff grid bias is that value of negative bias voltage which cuts off plate current flow.

Answer d Plate current saturation refers to the condition when the plate voltage applied to a tube is sufficiently high that all of the electrons emitted by the cathode are attracted to the plate, so that any further increase in plate voltage will produce no increase in plate current.

Answer e 1. Class A operation provides the least distortion of all classes of amplifier operation. By setting the operating bias and choosing the current input signal level on the class A operation, operation can be confined to the most linear portion of the operating characteristics. This is the point where the least distortion is produced.

Class AB_1 is generally not capable of providing quite as low distortion as class A because of the slightly increased operating bias and input signal levels. These tend to push the operation of the tubes outside the most linear portion of their operating characteristics.

Class B operation generally provides greater distortion than either class A or AB_1 and AB_2 because of several factors. First, since operation of the two tubes is not confined to the linear portion of the tubes' operating characteristics, distortion will be generated. Second, when the plate currents of the two tubes are combined in the output transformer primary, a form of "switching distortion" often occurs. This is due to the nonlinear magnetic properties of the output transformer.

Class C operation produces a series of plate current pulses which are converted into a sinusoidal waveform by the flywheel effect of the tuned circuit in the plate circuit. Class C amplifiers are not used to amplify a-m signals carrying intelligence, and are therefore not generally rated in terms of intelligence.

2. For the least amount of distortion, the tube must be operated in the most linear portion of its transfer characteristics curve.

3. In a class A amplifier stage, as the amplitude of the input signal is increased, a point will be reached where the control grid is driven positive with respect to the cathode. This will cause the flow of grid current, which will alter the tube's operating bias and cause distortion.

In class AB_2 and B operation, excessive input signal will cause the control grids to be driven beyond the rated positive excursion, with distortion as a result.

Answer f See part 3 of Answer e.

Answer g For a given value of control grid bias, plate current increases as plate voltage increases.

Question 3.211 *What is meant by "space charge"? By "secondary emission"?*

Answer In an electron tube, the heated cathode emits electrons which boil out of the cathode material. As these electrons travel away from the cathode, they form a cloud around the cathode. This cloud of electrons constitutes a negative charge, known as the *space charge*. The space charge, being negative, repels electrons nearest the cathode, tending to force them back into the cathode.

When a positive potential is applied to the tube's anode, electrons are attracted out of the space-charge region, reducing its size. With a sufficiently large plate voltage, all of the electrons in the space charge region are attracted to the plate, and no additional electrons will be available to be attracted to the plate as the plate voltage is further increased. This condition is known as *plate-current saturation.*

When the plate voltage is raised to a sufficient value, electrons striking the plate will "knock out" electrons from the plate material. This is known as *secondary emission,* and its amount increases as the plate voltage is increased.

Secondary emission is usually a problem; it causes distortion in a tetrode tube's operating characteristics. The secondary electrons are attracted to the screen grid when the screen voltage is higher than the plate voltage.

There are cases, however, when secondary emission is desirable. One example is the photomultiplier tube, in which secondary emission is used to provide amplification of photoelectrons emitted from its cathode.

Question 3.212 *What is meant by the "amplification factor" (mu) of a triode vacuum tube (amplifier)? Under what conditions would the amplifier gain approach the value of mu?*

Answer The amplification factor (mu or μ) of a tube is the maximum theoretical voltage gain possible from a tube. The amplification factor is a measure of the effectiveness of a triode tube as a voltage amplifier.

Amplification factor is defined as $\frac{\partial e_b}{\partial e_g}$, where ∂e_g is a small change in the grid voltage and ∂e_b is the change in plate voltage caused by the change in grid voltage when the plate current is kept constant. For example, if changing the grid voltage by 0.1 volt causes the plate voltage to change by 2 volts, the plate current being so adjusted that it is the same after the grid voltage change as before, the amplification factor is $2/0.1 = 20$.

The voltage gain of any practical stage is always considerably less than the amplification factor. The higher the load impedance, the nearer the gain will approach the amplification factor of the tube. If the load impedance is a great many times the plate resistance of the tube, the stage gain will approach the μ of the tube. However, practical considerations limit the load impedance on a triode to 3 or 4 times the plate resistance, or less.

If the stage uses transformer coupling, the transformer as well as the tube may be a source of voltage gain. Hence, the overall voltage gain of a transformer-coupled stage can be greater than the amplification factor of the tube.

Question 3.213 *What is meant by "plate resistance" of a vacuum tube? Upon what does its value depend?*

Answer Plate resistance is the opposition to flow of current through a vacuum tube. Since the flow of electrons between cathode and plate of a vacuum tube provides conduction of current between these two points, it follows that this flow of electrons must encounter some resistance as in the case of any other conductor. The value of the plate resistance can be determined by Ohm's law as in the case of any other resistance. Hence,

$$\text{plate resistance} = \frac{\text{plate voltage}}{\text{plate current}}$$

This definition is considered as the "static" (or d-c) plate resistance of a vacuum tube. The "dynamic" (or a-c) plate resistance of a tube is of more practical importance, and it is defined as follows:

$$r_p = \frac{\text{change in } e_b}{\text{change in } i_b} \qquad \text{with } e_g \text{ held constant}$$

As an example of the use of this formula in determining the dynamic plate resistance of a tube, let's say that, in a certain tube, i_b changes 5 ma when e_b changes 40 volts, e_g being held constant. Then,

$$r_p = \frac{40\text{ volts}}{0.005\text{ amp}} = 8000\text{ ohms}$$

Question 3.214 *What is meant by the voltage "gain" of a vacuum-tube amplifier? How is this gain achieved?*

Answer The voltage gain is the ratio of the signal output voltage from the stage to the signal input voltage to the stage. For example, if the incoming signal has an amplitude of 20 mv and the output signal going to the next stage has an amplitude of 500 mv, then the stage gain is 500/20 = 25

Amplifier voltage gain is achieved because of the amplifying action of the tube or other amplifying device used in the amplifier.

3.215 *Draw a rough graph of plate current vs. plate supply voltage for three different bias voltages on a typical triode vacuum tube.*

Question a *Explain, in a general way, how the value of the plate load resistance affects the portion of the curve over which the tube is operating. How is this related to distortion?*

b *Operation over which portion of the curve produces the least distortion?*

Typical triode curves for three different bias voltages are shown in Fig. 3.215.

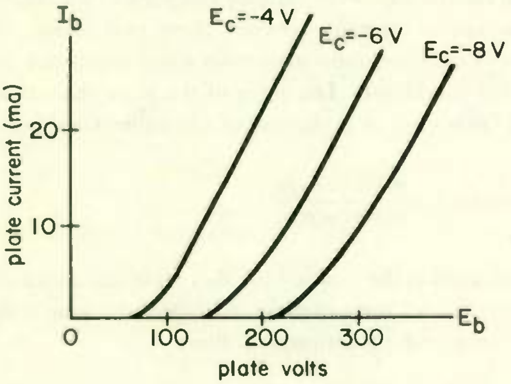

Fig. 3.215 Plate current vs. plate supply voltage for different bias voltages on a typical triode.

Answer a If distortion is to be avoided when an a-c signal is applied to the grid, the resulting maximum and minimum values to which the plate current and plate voltage swing during the signal cycle must be within the straight portion of the characteristic curves. This requires that the grid bias voltage, the plate supply voltage, and the plate load resistance have the right values with respect to each other. For example, suppose the plate load resistance is increased in a stage that was operating properly, but the values of supply voltage and grid bias are not changed. The additional resistance will reduce the plate current so that operation is lower down on the curves of Fig. 3.215. This may cause operation in the bottom bend of the curves on negative signal peaks, resulting in distortion. This condition could be corrected by increasing the no-signal plate current, either by making the bias less negative or by increasing the plate supply voltage.

If the plate load resistance is decreased in a stage that was operating properly, the no-signal current will increase. This may cause plate saturation on the positive signal peaks, resulting in distortion. Also, the tube may overheat from the larger than normal plate current.

Answer b Operation must be over the straight portion of the characteristic curve to avoid distortion.

3.216 *A triode "grounded-cathode" audio amplifier has a mu (amplification factor) of 30, a plate impedance of 5000 ohms, load resistance of 10,000 ohms, plate voltage of 300 volts, and plate current of 10 ma. Cathode resistor bias is used.*

Question a *What is the stage gain of the amplifier?*

b *What is the cutoff bias voltage E_{co}?*

c *Assuming the bias voltage to be one-half the value of E_{co}, what value of cathode resistor would be used to produce the required bias?*

d *What size capacitor should be used to sufficiently bypass the cathode resistor if the lowest approximate frequency desired is 500 cps?*

Answer a The stage gain of this amplifier can be calculated by the formula

$$\text{stage gain} = \frac{\mu \times R_L}{R_L + r_p} = \frac{30 \times 10{,}000}{10{,}000 + 5000} = 20$$

Answer b The value of cutoff bias can be calculated by the formula:

$$E_{co} = \frac{E_b}{\mu} = \frac{300}{30} = 10$$

Answer c Since the required grid bias is stated as being one-half the value of cutoff bias, this would be 10 x 0.5, or 5 volts. The proper value of the cathode bias resistor is found by Ohm's law:

$$\text{Cathode resistor (ohms)} = \frac{\text{Grid bias voltage}}{\text{cathode current}}$$

$$= \frac{5}{0.010} = 500 \text{ ohms}$$

Answer d To prevent degeneration and consequent loss of stage gain at the lowest audio frequency to be handled, a cathode bypass capacitor is connected across the cathode resistor. At the lowest frequency being handled by the amplifier, the reactance of this capacitor should not be over 5 or 10 per cent of the value of the cathode bias resistor which it shunts. By using the formula for capacitive reactance:

$$X_C = \frac{1}{2\pi f C}$$

it will be found that a capacitor of 20 μf will have a reactance of approximately 20 ohms at 500 cps. This will be satisfactory, because it is less than 5 per cent of the cathode bias resistor, 500 ohms.

Question 3.217 *Why is the efficiency of an amplifier operated class C higher than one operated class A or class B?*

Answer In a class C amplifier plate current flows only during that part of each cycle when the instantaneous value of plate voltage is low. The power dissipated in the tube is then low because E is low in the power formula, $P = EI$.

Question 3.218 *The following are excerpts from a tube manual rating of a beam pentode. Explain the significance of each item:*

Control grid-to-plate capacitance	*1.1 pf*
Input capacitance	*2.2 pf*
Output capacitance	*8.5 pf*
Heater voltage	*6.3 volts*
Maximum d-c plate supply voltage	*700 volts*
Maximum peak positive pulse voltage	*7000 volts*
Maximum negative pulse plate voltage	*1500 volts*
Maximum screen grid voltage	*175 volts*
Maximum peak negative control grid voltage	*200 volts*
Maximum plate dissipation	*20 watts*
Maximum screen grid dissipation	*30 watts*
Maximum d-c cathode current	*200 ma*
Maximum peak cathode current	*700 ma*
Maximum control grid resistance	*0.47 meg*

Answer *Control grid-to-plate capacitance* . . .The control grid-to-plate capacitance denotes the capacitance existing between the tube's control grid and plate. This capacitance is an important consideration, because its presence provides a signal feedback path from plate to grid. This capacitance becomes particularly important at higher frequencies, where the reactance of even a small grid-plate interelectrode capacitance will be low enough to couple excessive energy from the plate circuit back into the control grid circuit, causing oscillations.

Input capacitance . . . Tube manufacturers define the input capacitance of a tube as that value of capacitance existing between the tube's input electrode (normally the control grid) and all other electrodes except the output electrode (normally the plate) connected together.

The effective input capacitance of the stage as seen by the incoming signal is of more practical interest, since it indicates the high-frequency limit at which the tube can operate before signal loss becomes excessive because of shunting to ground through the tube capacitance. The effective input capacitance to a stage consists of the tube input capacitance, defined in the preceding paragraph, plus the effective grid-plate capacitance. The effective grid-plate capacitance is the apparent value of capacitance that the signal coming into the grid sees between grid and plate. It is much higher than the measured grid-plate capacitance given in tube manuals. That is because the value of capacitance that the incoming signal sees between grid and plate is approximately equal to the actual grid-plate capacitance multiplied by the gain of the stage.

As an example, a 6AG5 has an input capacitance of 6.5 pf and a grid-plate capacitance of 0.03 pf. If the gain of the stage in which the tube is used is 50, the effective input capacitance seen by the incoming signal is approximately $6.5 + (50)(0.03) = 6.5 + 1.5 = 8$ pf. The influence of the stage gain on the input capacitance is often called the Miller effect.

Output Capacitance . . . The output capacitance of the tube is the capacitance existing between the output electrode (plate) and all other electrodes except the input electrode (grid). The output capacitance is a determining factor in the circuit in which the tube is used, particularly at higher frequencies.

Heater Voltage . . . This is the optimum value of voltage which should be applied to the tube's heater.

Maximum d-c plate supply voltage is the maximum value of voltage applied to the tube plate circuitry. This is not the same value as the actual voltage appearing at the tube plate.

Maximum peak positive pulse voltage . . . This refers to the maximum value of a positive voltage pulse which can be safely applied between cathode and plate. Generally, the maximum duration of this pulse is indicated elsewhere in the tube specifications.

Maximum negative pulse plate voltage is the same as maximum peak positive pulse voltage except that the plate is driven negative with respect to the cathode.

Maximum screen grid voltage . . . This rating refers to the maximum voltage which may be applied to the screen grid without exceeding its power-dissipation rating. Excessive screen voltage will result in the screen drawing excessive current, causing it to become overheated. It may then also become a source of secondary electrons or liberate gas.

Maximum peak negative control grid voltage . . . This rating refers to the maximum peak voltage which may be applied to the control grid with respect to the cathode.

Maximum plate dissipation refers to the amount of power which can be safely dissipated by the plate in the form of heat. Plate dissipation is equal to the power input to the stage less the power delivered to the load.

Maximum screen grid dissipation has the same significance as the maximum plate dissipation rating, except that it applies to the screen grid rather than the plate.

Maximum d-c cathode current refers to the maximum permissible total steady-state d-c current being conducted through the tube. This includes both screen grid and plate current.

Maximum peak cathode current rating refers to the peak current which can be safely passed through the tube during a short duration of time.

Maximum control grid resistance rating refers to the maximum amount of resistance which should be placed between the tube's control grid and cathode. This value is generally less with fixed bias than with cathode bias. A greater grid resistance than the recommended maximum value may cause the tube to block or operate erratically.

Question 3.219 *Name at least three abnormal conditions which would tend to shorten the life of a vacuum tube. Also, name one or more probable causes of each condition.*

Answer Three important abnormal conditions are (1) reduction or loss of control grid bias, (2) improper filament (or heater) voltage, and (3) improper tube ventilation.

A reduction of control grid bias will result in shortened tube life because of the increase in plate current over its normal rating. The greater the reduction in bias, the greater the excessive plate current and the shorter the tube life. In the case of a complete loss of control grid bias, the plate current will probably reach a point at which the tube will be destroyed in a very short time.

The most probable cause of a reduction in control grid bias when fixed bias is used is a partial failure in the power supply furnishing the bias voltage. Causes of reduced voltage in this supply include loss of emission in the rectifier tube, a leaky filter capacitor, or a change in component values. If the fixed bias is obtained partially from the drive signal from the preceding stage, a decrease in drive signal will cause a drop in grid bias.

When grid-leak bias is used, the amount of bias depends upon the amplitude of the grid excitation signal. If the grid signal is below normal in amplitude, grid bias will be low. If cathode bias is used, a decrease in grid bias can be caused by a change in the value of the cathode bias resistor.

It is important that vacuum tubes, particularly of the filamentary cathode type, be operated at their rated filament voltage. Higher than rated voltage will result in shortened filament life owing to the higher operating temperature, which causes the active electron-emitting material to "boil off" more rapidly. Lower than normal operating temperature will also shorten filament life. It is also important that the oxide-coated indirectly heated cathodes be operated at their rated voltages, although a variation (approximately 10 per cent unless otherwise stated) is generally permissible.

Possible causes of higher than normal filament (or heater) voltage include excessive line voltage, defective filament transformer, and a defective filament voltage regulator if one is used. Lower than normal filament (or heater) voltage may be the result of a defective filament, a defective filament voltage regulator if one is used, lower than normal line voltage, or an increase in the filament current-carrying leads due to corrosion or other causes.

Improper ventilation will also shorten tube life, particularly in the case of tubes designed to handle large amounts of power. Without proper cooling, a tube's operating temperature will increase beyond the maximum proper adjusting value. This will result in excessive tube electrode temperatures, which will cause a decrease in the tube life and may also cause gas to be released by the tube elements, which would make the tube become inoperative.

In the case of smaller tubes which are cooled by convection, it is important that all ventilation ports, openings, or louvers be kept clear and free of dirt. Larger tubes which employ forced-air cooling may not receive a sufficient flow of air. Any complete stoppage of air is most probably due to failure of the blower motor or its associated fan or rotor. Restricted air flow can be the result of clogged air filters or air passages. The remedy is to check all portions of the forced-air cooling system for free air circulation.

Another cause of tube failure is excessive screen grid current, which can lead to excessive screen dissipation and its resultant overheating or gassing. Causes of excessive screen current include a shorted screen grid series dropping resistor, a defective fixed screen voltage power supply, or loss of plate voltage. The latter will cause screen current to soar, because all of the electrons flowing through the control grid are stopped by the screen grid rather than going on to the plate.

A shorted or leaky grid coupling capacitor can cause a preceding tube's positive plate voltage to reach the control grid of the tube in the following stage. This will make the grid more positive than the cathode, and excessive plate and screen current (in the case of a tetrode or pentode) will flow.

In a class C amplifier, mistuning of the tube's plate tank circuit will cause excessive plate current flow. If the tank is not adjusted to resonance, plate current will soar, causing possible destruction of the tube.

3 AUDIO AMPLIFIERS

Question 3.220 *Draw a simple schematic of a triode audio-amplifier stage with inductive coupling to a loudspeaker (load).*

Answer Inductive coupling between the output of a stage and its load is usually achieved by use of a transformer; see Fig. 3.220A. This is a series-fed stage, because the d-c component of the plate current flows through the primary L_1.

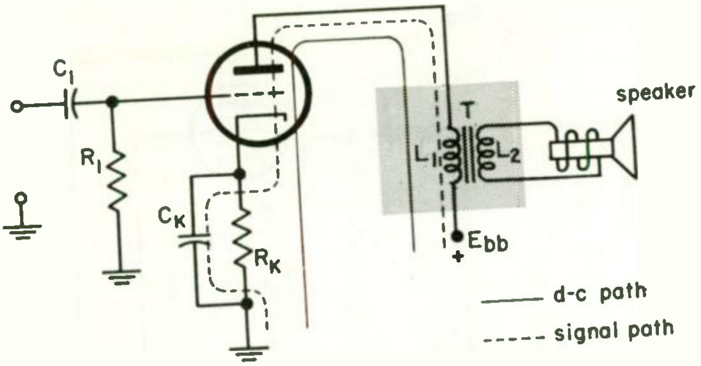

Fig. 3.220A Series-fed class A audio-amplifier stage with its output inductively coupled to the load. L_1 and L_2 in the shaded area are the primary and secondary windings of the audio output transformer *T*.

Figure 3.220B shows a shunt-fed inductively coupled audio-amplifier stage. It uses two extra components: C_2, which is the d-c blocking bypass capacitor, and L_3, which is an audio choke. The d-c component of the plate current is thus kept out of the primary L_1, which prevents core saturation. Also, the insulation requirements on the primary windings are less stringent. The reactance of C_2 must be low to prevent low-frequency attenuation.

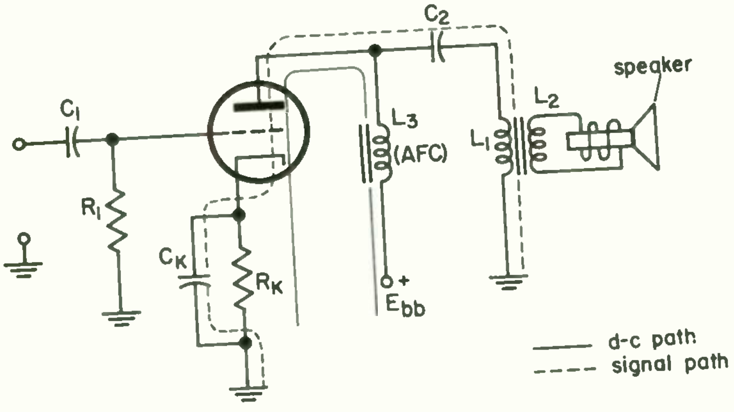

Fig. 3.220B Shunt-fed audio amplifier stage with its output inductively coupled to the load. The decoupling components keep d-c out of the primary L_1 and allow audio signals only to flow through it.

When an audio-signal voltage is applied to the grid, it causes signal current to flow through the tube in the path indicated by the broken line. This signal flowing through L_1 induces the signal into the

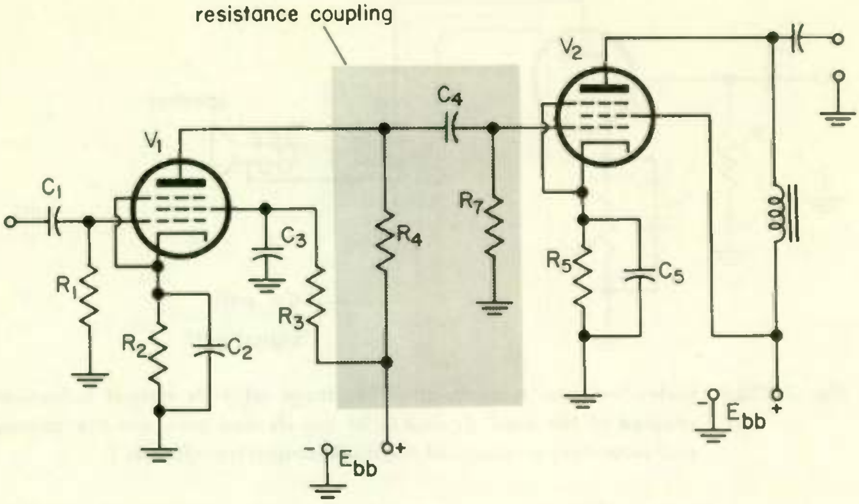

Fig. 3.221 **The resistance-coupled amplifier using pentode tubes.**

secondary L_2 and thus couples it to the speaker. The impedance ratio from L_1 to L_2 is step-down.

Question 3.221 *Draw a simple schematic of resistance coupling between two pentode vacuum tubes.*

Answer See Fig. 3.221. Resistors R_4 and R_7 and capacitor C_4 form the coupling network. A signal voltage develops across R_4 because of the flow of signal current through it. This signal voltage is applied to C_4 and R_7 in series. Some of the signal voltage is lost across C_4. Only that portion of signal developed across R_7 is applied to the input of the second stage. The reactance of C_4 must be low at the lowest frequency to be amplified to prevent poor low-frequency response caused by excessive signal loss across C_4.

The screen grids must have a low impedance to ground at the audio-signal frequencies; this is secured in the first stage by making bypass capacitor C_3 sufficiently large. The screen in the second stage doesn't need a bypass capacitor, because no screen resistor is being used. The screen therefore sees a low impedance to ground at audio frequencies through the plate power supply E_{bb}. The screen grids are operated with a positive d-c potential on them. In the first stage this positive potential is provided by the E_{bb} supply through R_3. In the second stage E_{bb} supplies it directly. Depending on the tube type and the screen d-c voltage requirements, a screen resistor may or may not be used.

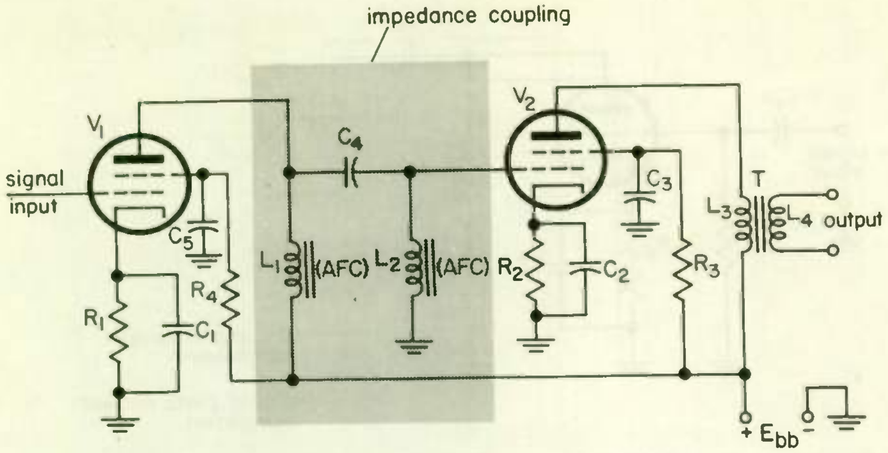

Fig. 3.222 Impedance-coupled amplifier using tetrode tubes.

Question 3.222 *Draw a simple schematic diagram of impedance coupling between two tetrode amplifier stages.*

Answer See Fig. 3.222. Components L_1, L_2, and C_4 form the impedance-coupling network. The principle of operation is the same as for resistance-coupled stages. See question 3.221. L_1 and L_2 serve the same functions as R_4 and R_7 serve in Fig. 3.220 as far as the signal is concerned. L_3 and L_4 are the primary and secondary of the output transformer T. Therefore the output of stage V_2 is transformer- (not impedance-) coupled to whatever load that follows. L_1 and L_2 are high-inductance audio chokes. The straight lines drawn beside these chokes represent iron cores. Signal transfer from first to second stage is by the coupling capacitor C_4. Chokes L_1 and L_2 are physically separated far enough that there is negligible inductive coupling between them.

Question 3.223 *Draw a simple schematic diagram illustrating a method of coupling a high-impedance loudspeaker to an audio-frequency amplifier tube without flow of plate current through the speaker windings and without the use of a transformer.*

Answer See Fig. 3.223. This is a shunt-fed circuit in which the d-c component of the plate current is kept out of the load (speaker coil L_2). Capacitor C_3 blocks the d-c component but passes the signal. The audio choke L_1 passes the d-c, but no significant signal current can flow through it. The signal component is thus forced to flow through the coupling capacitor C_3 and the load (speaker coil).

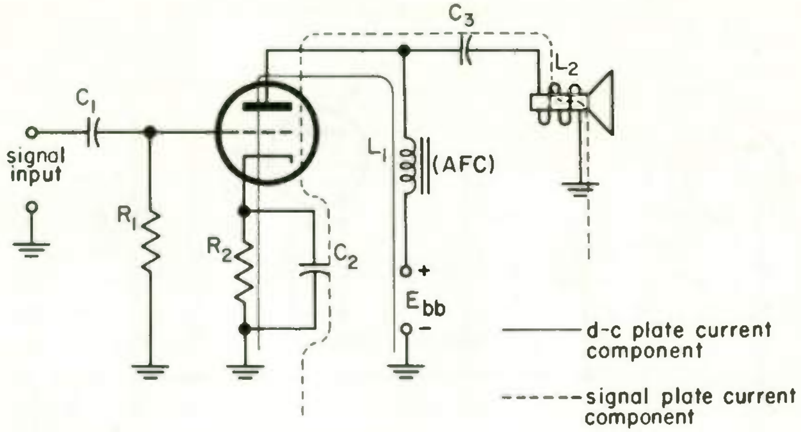

Fig. 3.223 **Shunt-fed amplifier circuit with a high-Z speaker used directly as the a-c load.**

Question 3.224	*What would probably be the effect on the output amplitude and waveform if the cathode resistor bypass capacitor in an audio stage were removed?*
Answer	The gain of the amplifier would be reduced. The purpose of the capacitor is to bypass the signal component of the plate current so that it will not pass through the cathode bias resistor. If the bypass capacitor is removed, the signal must pass through the cathode biasing resistor. Thus a signal voltage develops across the cathode resistor, which is fed back to the grid. The feedback is out of phase with the regular grid signal, and therefore degenerative, reducing the gain of the stage. However, there are advantages: The degenerative action reduces distortion and improves amplifier stability. For these reasons, part of the cathode resistance is often intentionally left unbypassed.
Question 3.225	*Why do vacuum tubes produce random noise?*
Answer	There are several reasons for noise generated within vacuum tubes. First, shot noise is generated by the uneven (that is, random) emission of electrons from the tube's electron-emitting cathode. Second, thermal noise is generated by random electron flow in the tube's control grid circuit. Third, partition noise is caused by random variations in the division of screen grid and plate currents. (This noise, of course, holds true only in the case of tetrode and pentode tubes.) Fourth, microphonics are a tube noise caused by the mechanical vibration of the elements—cathode, grid(s), and plate—within the tube. The sound waves from the speaker usually cause the vibrations.

Question
3.226

Why are decoupling resistors and capacitors used in stages having a common power supply?

Answer

When an amplifier consisting of several stages is operated from a common power supply, decoupling resistors and capacitors are used to prevent the amplifier from breaking into oscillation.

If the multistage amplifier derives its operating power from a power supply not having a low internal impedance and if no decoupling networks are used, the stages "see" this impedance as a common series resistance between the power supply output and its B+ line. Since both the output stage and input stage of the amplifier draw operating current through this same "resistance," signal-voltage variations developed across it by the output stage tube's plate signal current flowing through it will be fed back into the amplifier's input stage. This will cause the amplifier to oscillate.

To correct this situation, individual stages are "decoupled" from the power supply by means of decoupling networks. A typical decoupling network consists of a resistor connected from the "B+ end" of the amplifier tube's plate load resistor to the common B+ line. This is called the decoupling resistor. A large-value capacitor is placed between the junction of the two resistors and ground. The time constant of this capacitor and decoupling resistor is made long in comparison to the lowest signal frequency being handled by the amplifier.

Question
3.227

How would saturation of an output transformer create distortion?

Answer

When the flux within the core of an audio transformer reaches saturation value, a further increase of primary current will not appreciably further increase the flux. Since the secondary signal is formed by flux changes in the core, the secondary cannot respond to primary signal peaks that saturate the core. This is distortion, since the secondary signal is no longer an exact reproduction of the primary signal.

One cause of output transformer saturation is an excessively strong primary signal, which drives the core flux to saturation. Another cause is the d-c plate current, which flows through the primary. The flux set up by this current adds to the flux set up by the primary signal, so that saturation occurs at a lower signal level than it would if the d-c component were not present. In push-pull operation the d-c plate currents of the two tubes cancel out in the two halves of the primary winding. As a result, the transformer can handle a considerably stronger signal before saturation occurs than is the case for a single-ended stage.

Question 3.228 *Why is noise often produced when an audio signal is distorted?*

Answer When an audio signal is distorted, a large number of unwanted harmonics are produced. These harmonics, if present in sufficient amplitude, distort the original signal, causing it to sound raspy or noisy.

Question 3.229 *What factors determine the correct bias voltage for the grid of a vacuum tube?*

Answer If the tube is to be used as an amplifier, the correct grid bias is determined by its class of operation. In class A operation, for a given plate voltage and plate current, the grid bias is so adjusted that the d-c plate current will not change when an input signal is applied. Operation is then on the straight portion of the characteristic curve, for minimum distortion. If class AB operation is used, the grid bias must be so set that, with a given plate voltage and plate current, d-c plate current will be increased during large excursions of applied input signal.

For class B operation, the grid bias is so adjusted that plate current flows only during 50 per cent of the applied input signal (two tubes are used in class B, each tube conducting for 50 per cent of the input signal). Class C operation requires a grid bias sufficiently negative to allow plate current to flow only during substantially less than half of the applied input signal.

If the tube is to be used as an r-f oscillator, the grid bias is adjusted to obtain either the greatest frequency stability or the greatest power output, depending upon the oscillator application. In short, the factor which determines the proper grid bias for a vacuum tube is the intended circuit application of the tube.

3.230 *Draw a schematic diagram illustrating each of the following types of grid biasing and explain its operation.*

Question a *Battery*
b *Power supply*
c *Voltage divider*
d *Cathode resistor*

Answer a Figure 3.230A illustrates the use of battery bias with transformer-coupled stages, part (a), and resistance-coupled stages, part (b). In Fig. 3.230A(a) the battery B_1 furnishes the proper value of grid voltage to the control grid of V_1 via the secondary winding of the input trans-

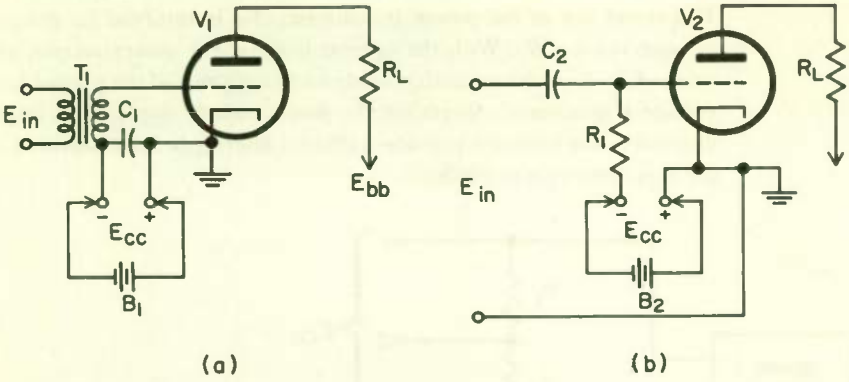

Fig. 3.230A Battery control grid bias.

former T_1. Capacitor C_1, connected across the battery, serves as a low-impedance path across the battery for audio-frequency signals. The battery used to furnish control grid bias is generally referred to as the C battery.

The bias voltage in Fig. 3.230A(b), from the battery B_2, is applied to V_2's control grid via R_1, which has sufficient resistance to prevent the input signal from being short-circuited by the relatively low impedance of the bias battery.

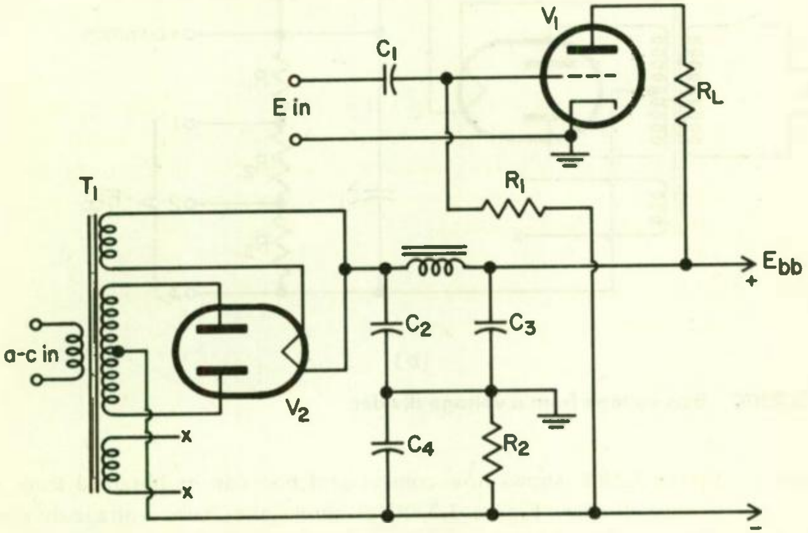

Fig. 3.230B Grid bias derived from power supply.

Answer b Figure 3.230B shows a method of obtaining control grid bias from the power supply furnishing operating voltage to the rest of the circuitry.

The center tap of the power transformer T_1 is returned to ground through resistor R_2. With the normal load on the power supply, the value of R_2 is so chosen as to provide a voltage drop of the proper bias voltage. Capacitor C_4 filters out the power supply ripple. This single filter capacitor generally provides sufficient filtering because the load of the bias circuitry is negligible.

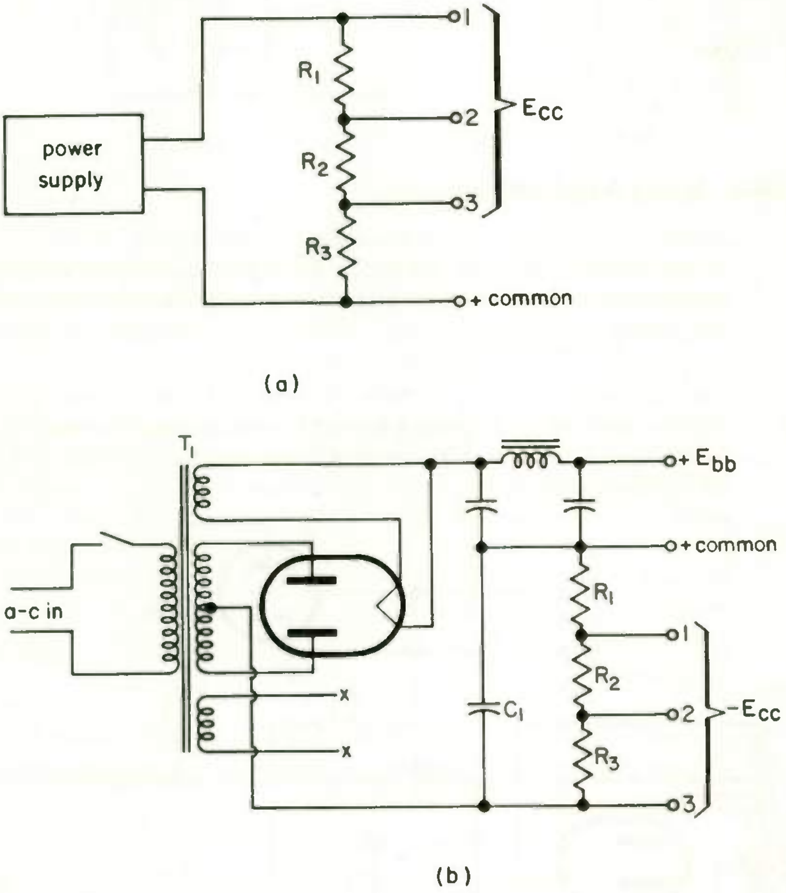

Fig. 3.230C **Bias voltage from a voltage divider.**

Answer c Figure 3.230C shows how control grid bias can be obtained from a voltage divider. Figure 3.230C(a) shows the basic voltage-divider arrangement, which is suitable where three different bias voltages are needed. The output of the power supply is applied across the voltage divider, R_1, R_2, R_3. The ratio of these resistors is chosen to provide the required bias voltages at outputs 1, 2, and 3.

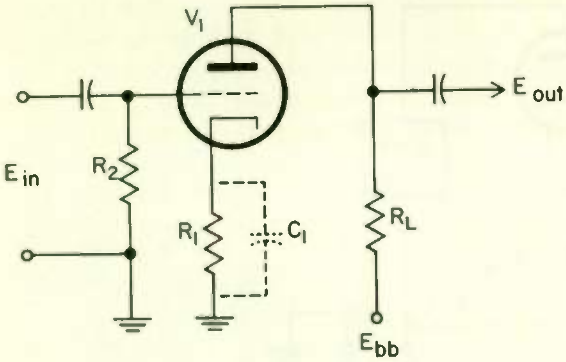

Fig. 3.230D **Method of obtaining cathode bias.**

Figure 3.230C(b) shows a voltage-divider bias arrangement incorporated into a power supply. The circuit is essentially the same as that of Fig. 3.230B, except that R_2 in Fig. 3.230B has been replaced with three resistors, R_1, R_2, and R_3, in Fig. 3.230C(a) and (b).

Answer d

Figure 3.230D shows the basic method of obtaining cathode bias. The cathode bias resistor R_1 is placed between cathode and ground. Plate current flows through R_1, producing a voltage drop across it proportional to the plate current. This voltage drop across R_1 makes the cathode positive with respect to its control grid (the control grid is returned to ground via R_2). Since making the cathode positive with respect to the grid is the same as making the grid negative with respect to the cathode, the effective negative bias will be equal to the voltage drop across R_1.

A bypass capacitor C_1 is normally placed across the cathode bias resistor. This capacitor removes the variations in voltage drop across R_1 caused by the signal flowing through it.

Question
3.231

Is grid-leak biasing practical in audio-amplifier stages?

Answer

No. Audio-amplifier stages require a constant value of grid bias. Grid-leak bias varies in amplitude in accordance with the amplitude of the signal fed to the grid. Hence, the audio signals of high amplitude would develop more bias than signals of low amplitude would. This would cause distortion in the output. Also the grid must draw current in order to have grid-leak bias. Audio amplifiers are not usually so operated that the grid draws current.

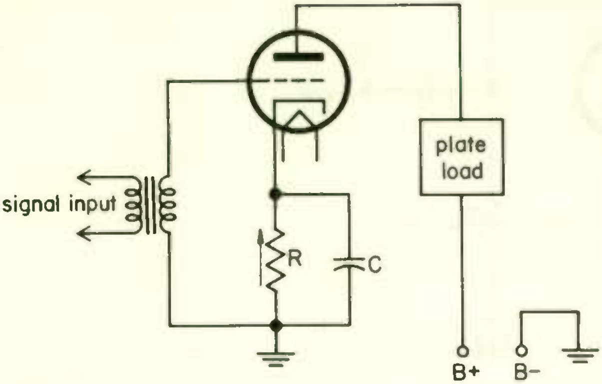

Fig. 3.232 **Obtaining grid bias in an indirectly heated cathode type of vacuum tube by using a resistance in the cathode circuit.**

Question 3.232 *Draw a diagram showing a method of obtaining grid bias for a filament-type vacuum tube by use of resistance in the cathode circuit of the tube.*

Answer See Fig. 3.232. The bias is obtained by the current flow through resistor *R*. The direction of electron flow is as indicated by the arrow. This makes the bottom of resistor *R* negative with respect to the top, or cathode. The grid, which is connected to the bottom of resistor *R*, is therefore at a lower potential than the cathode and consequently biased. The bypass capacitor *C* passes the alternating component of the plate current, keeping the bias voltage across *R* at a constant d-c value.

Question 3.233 *Explain how you would determine the approximate value of cathode bias resistance necessary to provide correct grid bias for any particular amplifier.*

Answer As explained in Answer 3.230(d), cathode bias is developed by the voltage drop across a resistor connected in a tube's cathode circuit. The amount of voltage developed across this resistor is dependent upon the amount of current flowing through the tube. The current value of the cathode bias resistor can be determined by a simple application of Ohm's law. In formula form:

$$\text{cathode resistor (ohms)} = \frac{\text{required grid voltage}}{\text{total cathode current}}$$

In the case of a triode the total cathode current is the same as the plate current. In tetrodes and pentodes the total cathode current is the plate current plus the screen current.

Question 3.234 ***Why does a class B audio-frequency amplifier stage require considerably more driving power than a class A amplifier?***

Answer In a class A amplifier the bias is so adjusted that no grid current flows during any part of the input waveform. This being the case, the class A amplifier offers a high impedance to input signals. On the other hand, a class B amplifier is so biased that grid current flows during part of the positive half-cycles of the input-signal waveform. This flow of grid current represents a loss in the grid circuit. The stage providing the input signal to the class B stage must, therefore, be capable of supplying power to overcome this loss. Also, since only the positive half of the input signal is used, it must be of greater amplitude than needed with class A operation in order to swing the plate current over the entire linear portion of the characteristic curve.

Question 3.235 ***Show by use of circuit diagrams two ways of using single-ended stages to drive a push-pull output stage.***

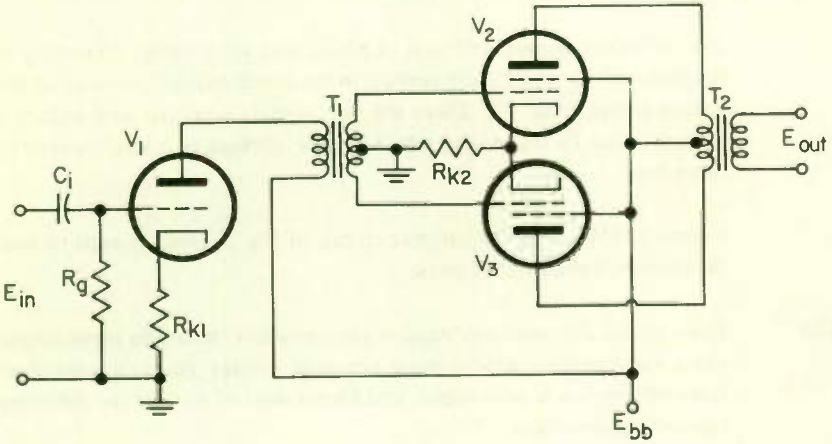

(a)

Fig. 3.235A Interstage transformer used to couple output of a single-ended stage to a push-pull stage.

Answer Figure 3.235A shows an interstage coupling transformer T_1 with a center-tapped secondary winding used to couple the output of a single-ended stage to the push-pull stage. The amplified signal appearing at the plate of V_1 is applied to the primary of T_1. The signal flowing in the primary of T_1 induces a signal voltage in its secondary. T_1's center-tapped secondary provides signals to the control grids of V_1 and V_2, which are 180° out of phase—a necessity for push-pull operation.

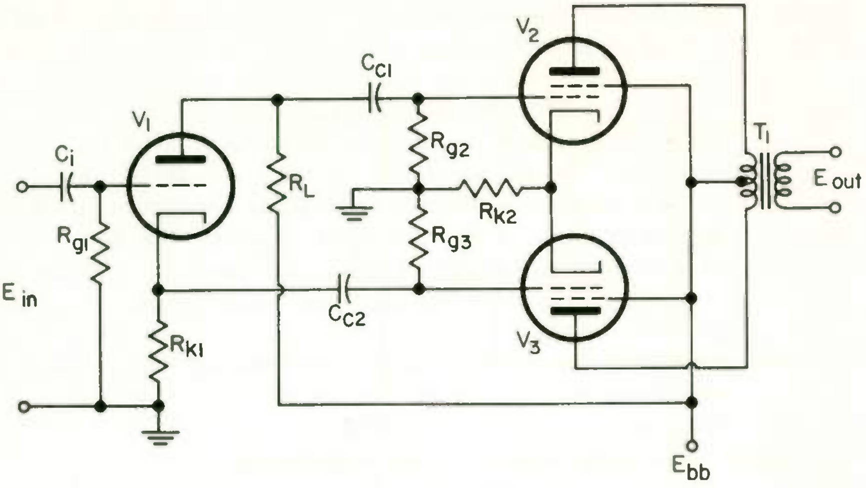

(b)

Fig. 3.235B **Inverter circuit of Fig. 3.236C(a).**

The amplified signals, 180° out of phase with each other, appearing at the plates of V_1 and V_2 are applied to the center-tapped primary of the output transformer T_2. There the two signals combine and induce a current in the T_2 secondary, which may be applied to a loudspeaker or other load.

Figure 3.235B shows the inverter circuit of Fig. 3.236C(a) used to feed the push-pull grids out of phase.

3.236 *Draw circuit diagrams and explain the operation (including input-output phase relationships, approximate practical voltage gains, approximate stage efficiency, use advantages, and limitations) of each of the following types of audio circuits:*

Question a *Class A amplifier with cathode resistor biasing.*
b *Cathode follower amplifier.*
c *At least two types of phase inverters for feeding push-pull amplifiers.*
d *Cascaded class A stages with a form of current feedback.*
e *Two class A amplifiers operated in parallel.*
f *Class A push-pull amplifier.*

Answer a For a class A amplifier with cathode resistor biasing, see Fig. 3.236A. In operation, the signal to be amplified is applied to the grid via the blocking capacitor C_i. The purpose of this capacitor is to block d-c voltage of the preceding stage from V_1's grid.

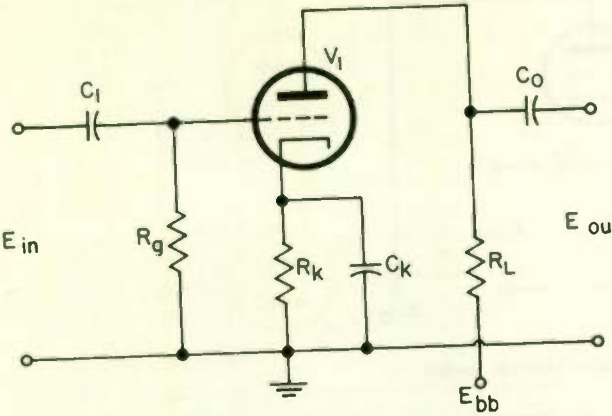

Fig. 3.236A **Class A amplifier with cathode resistor biasing.**

Operating bias for the stage is obtained from the cathode bias resistor R_k, placed in series between the cathode and ground. The cathode bypass capacitor C_k removes the variation in voltage drop across R_k that is due to the signal component of plate current flowing through R_k.

The input signal applied to the control grid of V_1 varies V_1's plate current accordingly. These variations in plate current produce a voltage drop across the plate load resistor R_L which is proportional to the input signal. These voltage variations are coupled to the following stage by C_o. The purpose of C_o is to prevent d-c plate voltage from being applied to the following stage.

In this amplifier circuit, which is a common-cathode configuration, a 180° phase reversal occurs between the input and output voltage signal waveforms. The approximate practical voltage gain of this circuit is about 15, assuming that a triode with a μ of 20 is used. With pentodes, much higher voltage gains are possible; the approximate efficiency of this stage is 25 per cent.

This circuit is widely used as a voltage amplifier to drive either a power amplifier or additional voltage amplifier stages. The advantage of the circuit is that it is simple; it requires no separate source of bias voltage. Also, the bias is "self-adjusting" to a point. As plate supply voltages vary, the voltage drop across the cathode resistor varies accordingly, thus maintaining essentially correct bias.

Answer b Figure 3.236B is the schematic diagram of a typical cathode-follower amplifier. This type of amplifier stage differs from the common-cathode

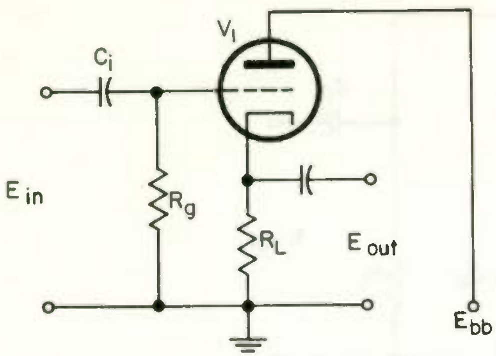

Fig. 3.236B Basic cathode-follower circuit.

stage in that the output signal is taken from the cathode rather than the plate.

Since the output is taken from across it, the cathode resistor R_L, cannot be bypassed. The resulting degenerative feedback is sufficient to reduce the cathode-follower "voltage gain" to less than unity.

One of the characteristics of the cathode follower is that it has a very high input impedance (higher than that of the conventional common-cathode stage) and a low output impedance. Because of this characteristic the cathode follower is often used as an impedance-matching device between high- and low-impedance sources.

The voltage gain of the cathode follower is always less than unity. A practical value with most typical configurations is approximately 0.9. There is no phase reversal between the input signal and output signal in a cathode follower.

Since the cathode follower is operated as a class A amplifier (d-c plate current is essentially constant whether or not an input signal is present), its efficiency is the same as that of a class A amplifier, approximately 25 per cent.

The major application of the cathode follower is as an impedance-matching device between high- and low-impedance circuits. The major limitation of the cathode follower is that it is not capable of providing any voltage gain. The cathode follower is, however, capable of providing a power gain.

Answer c Figure 3.236C illustrates two basic types of phase inverters. The one of Fig. 3.236C(a), shown as a schematic, is known as the split-load

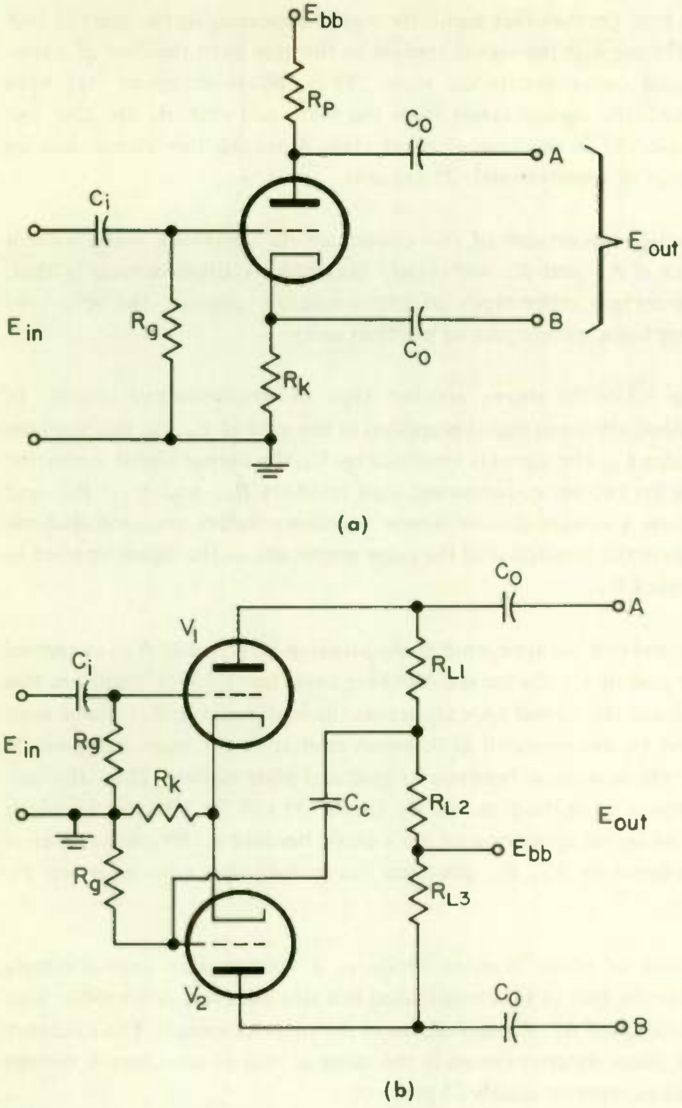

Fig. 3.236C Basic phase-inverter circuits.

phase inverter. In operation, the input signal is applied to the grid. Equal-value resistors R_k and R_p are placed in the cathode and plate leads, respectively. Since these resistances are of equal value, equal output signal voltages will be developed across them.

As in the previously described cathode-follower circuit, the voltage appearing at the cathode will be in phase with the input signal applied to the grid. On the other hand, the signal appearing at the plate is 180° out of phase with the signal applied to the grid as in the case of a conventional common-cathode stage. Thus, phase inversion has been achieved: the signals taken from the plate and cathode are 180° out of phase. As in the case of other class A stages, this circuit has an efficiency of approximately 25 per cent.

The major advantages of this circuit are its simplicity and excellent balance if R_k and R_p are closely matched. A disadvantage is that, unlike certain other types of phase-inverter circuits, the split-load inverter has a voltage gain of less than unity.

Figure 3.236C(b) shows another type of phase-inverter circuit. In operation, the input signal is applied to the grid of V_1 via the blocking capacitor C_i. The signal is amplified by V_1, the output signal appearing across the two series-connected load resistors R_{L1} and R_{L2}. R_{L1} and R_{L2} form a voltage divider whose resistance values are such that the voltage at the junction is of the same amplitude as the signal applied to the grid of V_1.

The signal voltage appearing at the junction of R_{L1} and R_{L2} is applied to the grid of V_2 via the d-c blocking capacitor C_c. V_2 amplifies this signal, and the output appears across the load resistor R_{L3}. Since both V_1 and V_2 are operated as common-emitter stages, each will provide a 180° phase reversal between its grid and plate signals. Thus, the output appearing at the plate of V_1 (point A) will be 180° out of phase with the signal appearing on V_2's plate, because a 180° phase reversal is produced by V_2. R_k provides the proper operating bias for V_1 and V_2.

This type of phase inverter produces a voltage gain approximately equal to the gain of V_1 alone if used in a straight class A amplifier with equal values of R_L, R_k, and R_g as in the inverter circuit. The efficiency of this phase inverter circuit is the same as that of any class A voltage amplifier—approximately 25 per cent.

This phase inverter is advantageous in that it provides a fair amount of voltage gain. On the other hand, its balance is not as good as that of the "split-load" phase inverter.

Answer d Figure 3.236D is the basic schematic of a two-stage cascaded audio amplifier with current feedback. Signals to be amplified are applied to the grid of V_1. These produce variations in V_1's grid voltage which vary V_1's plate current proportionally. The plate current variations

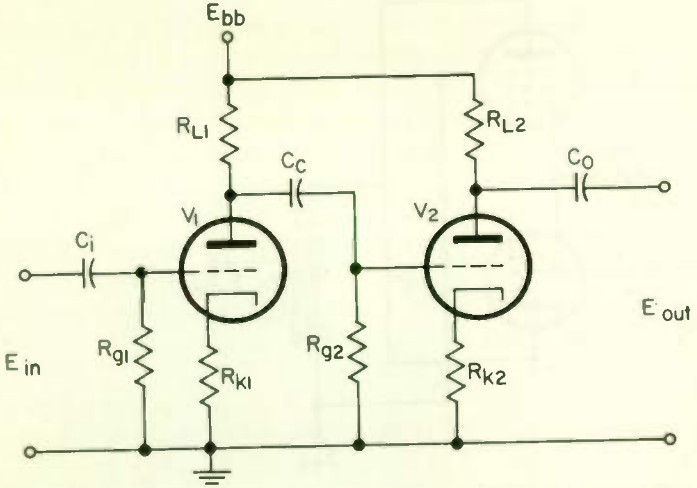

Fig. 3.236D Two-stage amplifier with current feedback.

cause corresponding variations in the voltage drop across the plate load resistor R_L. The voltage variations, which are an amplified replica of the input signal, are coupled to the grid of V_2 for further amplification. The signal, further amplified by V_2, is coupled to the output via C_o.

The cathode bias resistors R_{k1} and R_{k2}, for V_1 and V_2 respectively, are not bypassed. The result is degenerative feedback, which is a form of current feedback.

The phase of the output signal E_{out} is the same as that of the input signal E_{in}, because of the double phase reversal occurring in the two stages. The signal appearing at the plate of V_1 is 180° out of phase with the input signal owing to the 180° phase-reversal characteristic of the common-cathode stage. This signal is again reversed 180° in the second stage. Thus, the phase of the output stage is identical with the phase of the input signal.

The voltage gain of this configuration is equal to the product of the two individual stages. Since both stages are operated class A, their efficiency will be the same as for any class A amplifier, approximately 25 per cent.

The main application of this two-stage amplifier is as a low-distortion voltage amplifier. Beside reducing distortion, the current feedback obtained by the unbypassed cathode bias resistors R_{k1} and R_{k2} will increase the frequency response of the amplifier as compared with a similar amplifier with bypassed cathode bias resistors. Thus, this

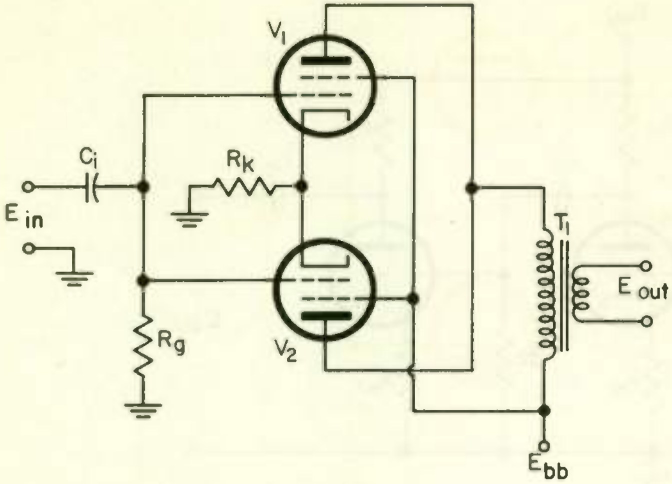

Fig. 3.236E Parallel class A amplifier.

amplifier may find application where a somewhat extended bandwidth is required.

The major limitation of this amplifier is its reduced voltage gain when compared with a conventional circuit with bypassed cathode bias resistors.

Answer e In Fig. 3.236E the signal to be amplified is applied to the parallel-connected control grids of V_1 and V_2 via the d-c blocking capacitor C_i. Both tubes obtain their correct control grid bias from the cathode bias resistor R_k.

The varying signal voltage applied to the control grids of V_1 and V_2 cause corresponding variations in the plate currents. These varying plate currents flow through the primary of the output transformer T_1, inducing a current in T_1's secondary which may be applied to a speaker or other load.

Since this configuration is operated as a common-cathode stage, there will be a 180° phase reversal between its input and output. Because the stage is operated as a power amplifier, it is intended to provide power amplification rather than voltage amplification. The stage is biased for class A; therefore, its efficiency will be approximately 25 per cent.

The major application of parallel-tube class A amplifiers is as power amplifiers where it is desired to double the power obtained with a single tube. However, the parallel arrangement generates considerably more

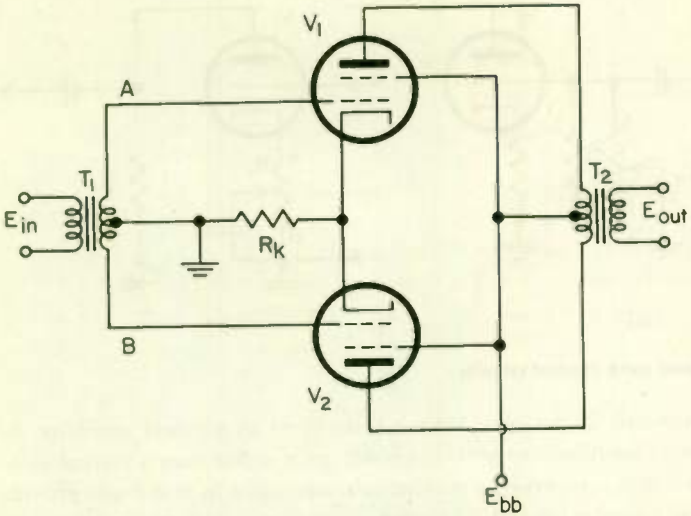

Fig. 3.236F Class A push-pull amplifier.

distortion than if the same two tubes were used in a push-pull configuration.

Answer f Figure 3.236F is the schematic of a class A push-pull audio amplifier. The signal to be amplified is applied to the primary of the input transformer T_1. The center-tapped secondary of T_1 provides the required push-pull signals to drive the control grids of V_1 and V_2. As the top end of T_1's secondary (point A) swings positive with respect to T_1's center tap, the bottom end of T_1's secondary (point B) swings negative. Thus, the two ends of T_1's secondary are 180° out of phase with respect to ground (common).

Proper operating control grid bias for V_1 and V_2 is supplied by the cathode bias resistor R_k. For push-pull operation, this resistor need not be bypassed, because the a-c signal components flowing through it cancel out, and thus there is no degenerative feedback to reduce stage gain.

The signal voltage variations applied to the control grids of V_1 and V_2 cause corresponding variations in the plate currents. These plate currents combine in the two halves of the center-tapped primary winding of the output transformer T_2, developing a current in the T_2 secondary winding which can be applied to a loudspeaker or other load. Since this is a common-cathode stage, the signal appearing at the plates of V_1 and V_2 will be 180° out of phase with the signals on the respective grids.

This push-pull stage is operated class A, so its efficiency will be ap-

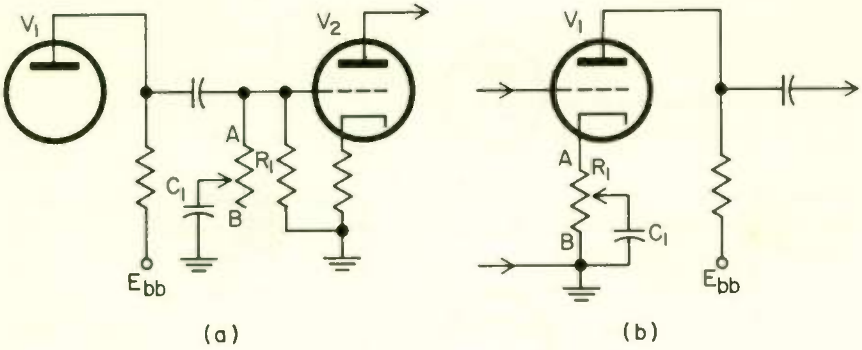

Fig. 3.237 **Typical tone control circuits.**

proximately 25 per cent. Since it is designed as a power amplifier, its primary function is to provide a power gain rather than a voltage gain. This circuit is superior to parallel-tube operation in that it can provide higher power at lower distortion.

Question 3.237 *Draw circuit diagrams and explain the operation of two commonly used tone control circuits.*

Answer Figure 3.237 shows two typical tone control circuits. Part (a) provides treble "cut," and part (b) provides treble "boost." The circuit shown in Fig. 3.237(a) operates as follows: The tone-control components R_1 and C_1 are connected from the grid of V_2 to ground (common). When R_1's slider is set for minimum resistance, at point A, capacitor C_1 is effectively connected directly from the grid of V_2 to ground. Since C_1 is chosen to have a low reactance at the higher audio frequencies handled by the amplifier, it will bypass those frequencies to ground (common).

At the lower audio frequencies, C_1's reactance will increase, and as a result its bypassing action will decrease at the lower frequencies. The signal amplitude at the grid of V_2 will then be greater at low frequencies than at high frequencies, thus achieving the desired high-frequency "cut." As R_1's slider is rotated toward the maximum-resistance end of R_1, increasing amounts of resistance will be placed in series with C_1. This reduces the bypassing action of C_1, and the high-frequency bypassing becomes less. At the maximum resistance of R_1, C_1 is effectively out of the circuit, no bypassing of the high frequencies results, and the stages have an essentially flat frequency response.

In the circuit of Fig. 3.237(b) (which uses high-frequency "boost") cathode bypass capacitor C_1 is chosen of such value as to have substantial reactance at low audio frequencies but low reactance at the higher audio frequencies. Signals that pass through the cathode resistor rather than bypassing through C_1 cause degenerative feedback, which reduces the stage gain.

When R_1's slider is so set that C_1 is connected directly from cathode to ground, C_1 will bypass the higher audio frequencies but not the lower frequencies. As a result of this bypassing action, degeneration at the higher audio frequencies is reduced and the stage gain is increased at the higher audio frequencies. This provides the desired high-frequency "boost."

As R_1's slider is rotated, C_1 is effectively shunted across less and less of R_1. As a result, the bypassing effectiveness of C_1 is reduced and less high-frequency boost is obtained. When R_1's slider is at point B, C_1 is effectively out of the circuit and the stage has an essentially flat frequency response.

Question 3.238 *Name some causes of hum and self-oscillations in audio amplifiers and suggest methods of reducing it.*

Answer Hum is a low-pitched droning noise in the output of an amplifier. The origin of hum is the a-c power source. One path by which hum is introduced into the output of an audio amplifier is through heater-to-cathode capacitance and heater-to-cathode emission. This hum can be reduced or eliminated by center-tapping the filament transformer or placing a potentiometer across the heater supply with the slider grounded, Fig. 3.238. However, a center-tapped filament transformer or potentiometer is not always needed.

The most common cause of hum is insufficient filtering of the d-c power supply output. The power supply filter components should be checked first if hum suddenly appears in an audio amplifier.

Electrostatic and magnetic coupling between a-c filament power supply leads and the amplifier circuitry is sometimes a cause of hum. Use of electrostatic shields and twisting of the a-c leads helps reduce this form of coupling. The magnetic fields surrounding power transformers can induce a-c into filter chokes and the chassis. By carefully orienting the power transformer so that minimum coupling exists between it and the chokes, hum is reduced. Placing the laminations vertically instead of in the plane of the chassis reduces hum. In extreme cases, a high-permeability shield around the transformer is required.

Oscillation in an audio amplifier is most commonly caused by inter-

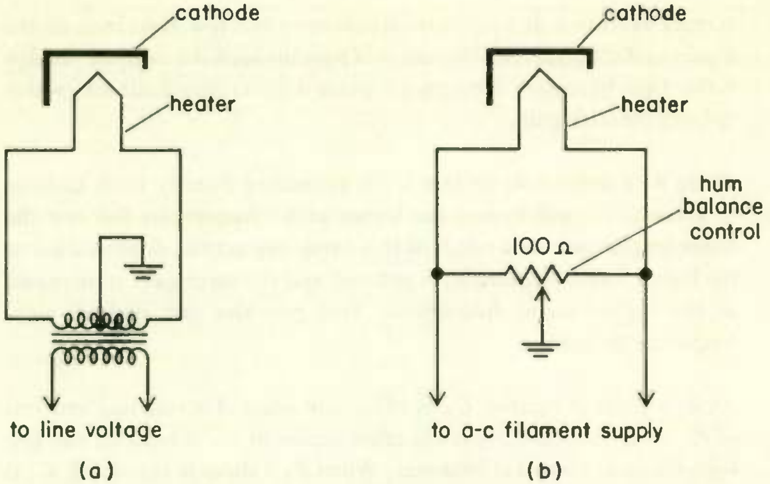

Fig. 3.238 **Methods of reducing hum, the source of which is the filament supply. The center-tapped transformer is satisfactory for low-gain amplifiers, but the potentiometer hum balance method in (b) is better for high-gain amplifiers.**

action between stages. A common source of interaction is inter-stage coupling through the power supply. This can be avoided by the use of a power supply with good regulation and by the use of resistor-capacitor decoupling filters in the individual plate supply leads. The stages should be further isolated from each other by the use of shielding and by the proper placement of components. It is particularly important that the output circuit be kept well isolated from the input stage. In the power supply filter an output capacitor sufficiently large to present a low reactance at the lowest frequency handled must be used. Otherwise, this element acts as a common coupling impedance. Mechanical coupling between stages, called microphonics, is also a cause of oscillations. This can be avoided by rubber-mounting high-gain stages. An open grid-leak resistor, or the use of an excessively large coupling capacitor, may also cause an audio amplifier to oscillate.

Question 3.239 *What factors should be taken into consideration when ordering a class A audio output transformer? A class B audio output transformer feeding a speaker of known ohmic value?*

Answer The general considerations when ordering transformers are: *Frequency response* . . . At low frequencies the response of audio transformers drops off because of the reduced inductive reactance of the windings. At high audio frequencies the response tends to drop off too. This is caused by the reduced reactance of the distributed capacitance between

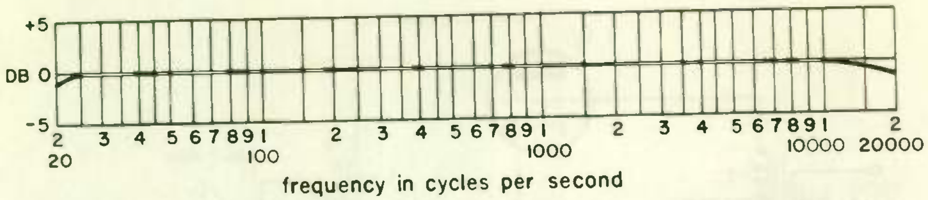

Fig. 3.239A A typical frequency-response curve of a good-quality audio transformer.

the turns of the windings. This loss of high and low frequencies is much more severe in some transformers than in others. Figure 3.239A shows that a good-quality transformer will handle low and high frequencies well. In ordering, the transformer chosen must have a frequency response as good as that expected from the audio system.

Power rating . . . The transformer must be capable of handling the signal power that is applied to the primary. If the signal power exceeds the power rating of the transformer, the transformer may overheat, the insulation of the windings may break down, and the core may saturate during portions of the signal cycle, which will cause distortion. If the transformer is of inadequate power rating for the load power requirements, distortion will result because of the inability of the transformer to deliver power peaks.

D-c flowing in the primary . . . Transformers of various designs are more or less capable of handling a d-c component in the primary. If this d-c exceeds the value specified by the manufacturer, the core may be driven into saturation during operation with normal signal levels, which may cause distortion of the signal waveform. In ordering a transformer for a single-ended class A stage, make sure the transformer has a d-c rating in excess of the quiescent plate current value that will flow through the primary.

Transformers that have relatively high d-c primary current ratings have larger core areas and therefore are generally more expensive. Thus push-pull operation or shunt feed should be used wherever practicable. With class A push-pull, the magnetizing force produced by the d-c plate current component through half of the primary cancels the magnetizing force produced in the other half of the primary. Shunt feed keeps the d-c component out of the primary.

Primary and secondary impedances . . . When using a transformer for coupling audio stages or components the primary impedance must be such value that it properly loads the tube or transistor feeding it. Similarly, the secondary must have an impedance that properly

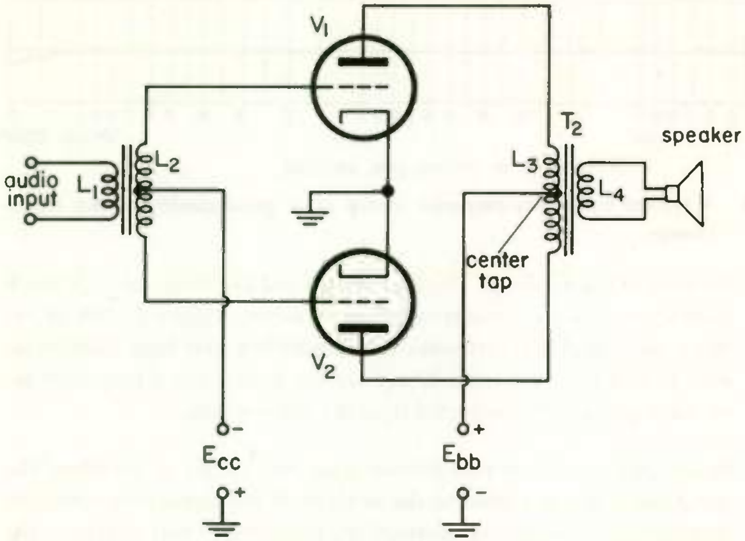

Fig. 3.239B **The push-pull class B audio amplifier.**

matches the load placed on it. For example, if a 16-ohm speaker is to work off the secondary, the secondary impedance should be 16 ohms too, for maximum power transfer.

A class B audio amplifier is always operated in push-pull. This means that the plate circuit transformer primary and the grid circuit transformer secondary must be center-tapped; see Fig. 3.239B. Therefore, when ordering a transformer for such a stage, the proper center taps must be specified. It must be kept in mind that the impedance of the top half of L_3 must be a value that properly loads the tube V_1. Similarly, the impedance of the lower half of L_3 must properly load V_2. For example, if each tube requires a load of 2500 ohms, the transformer must have a primary impedance value of 2500 ohms CT. The abbreviation CT means *center-tapped* on specification sheets.

Question 3.240 *Draw a diagram of a single-button carbon microphone circuit, including the microphone transformer and source of power.*

Answer See Fig. 3.240. The microphone transformer is a step-up transformer to match the low impedance of the microphone to the high impedance of the grid of the audio amplifier.

Question 3.241 *If low-impedance headphones on the order of 75 ohms are to be connected to the output of a vacuum-tube amplifier, how may this connection be made to permit most satisfactory operation?*

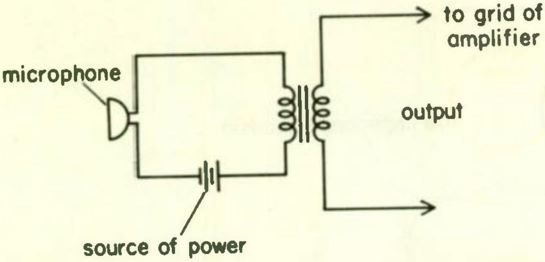

Fig. 3.240 **Single-button carbon microphone connected to transformer and power source.**

Answer The output of a vacuum-tube amplifier can be satisfactorily coupled to low-impedance headphones by use of an impedance-matching transformer *T* as shown in Fig. 3.241A. While high-impedance headphones can be connected directly into the plate circuit without a transformer, the gain of the stage would be very poor if this connection were made with low-impedance headphones because of the serious mismatch between plate impedance and load impedance. A low impedance can be coupled to a vacuum-tube amplifier without a transformer by connecting it in the cathode circuit; see Fig. 3.241B.

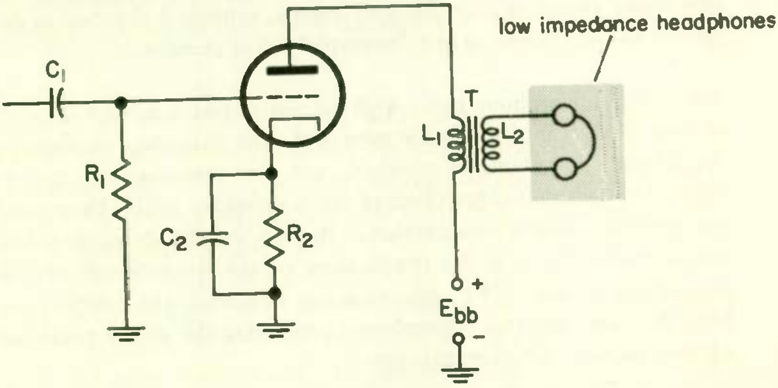

Fig. 3.241A **Low-impedance headphones matched to an audio amplifier with an impedance-matching transformer *T*.**

Question **3.242** *Describe the construction and characteristics of a crystal-type microphone.*

Answer The crystal microphone makes use of the piezoelectric effect of Rochelle-salt crystals to transform mechanical stress produced by sound waves into an electrical output. The most common arrangement consists of two very thin Rochelle-salt crystal plates cemented together differentially, so that when a voltage is applied between the open faces, one plate will increase in length while the other decreases, forcing the

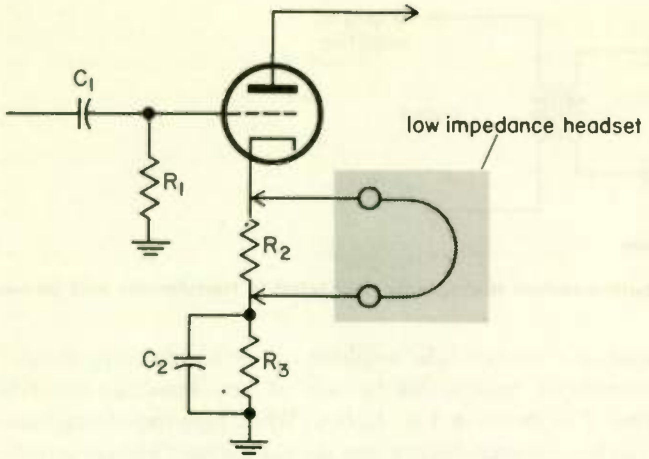

Fig. 3.241B **Low-impedance headphones connected into the cathode circuit of an audio amplifier.**

element to bend. Conversely, the bending of the element due to the impact of sound waves will generate a voltage across the crystal face, which is then utilized to provide the input signal to an amplifier. The two crystal plates in a crystal microphone, cemented together as described above, are known as a "bimorph" cell or element.

The crystal microphone has a high output impedance, high enough to work directly into a vacuum-tube grid. The frequency response of the crystal microphone is excellent, and this response will not be affected by the shunt capacitance of the microphone cable. The crystal microphone is nearly nondirectional. Its principal disadvantage is low output power. Also, if the temperature of the Rochelle-salt crystal microphone exceeds 120°F, the crystal may be ruined. This temperature limit does not apply to microphones employing the newer polarized ceramic element of barium titanate.

Question 3.243 *Describe the construction and characteristics of a carbon-button type of microphone.*

Answer The usual single-button carbon microphone employs a damped, stretched diaphragm. This is attached to a cup filled with carbon granules in such a manner that varying the pressure on the diaphragm varies the pressure on the carbon granules. This in turn varies the resistance across the carbon button. The diaphragm is damped by an air cushion to improve its frequency response, which extends approximately from 75 to 5000 cycles. The carbon microphone is the most sensitive of all microphones. However, a hiss is noticeable when the sound level is low. The output is high, with a medium output impedance. The carbon-button microphone is somewhat directional. It is rugged and practically unaffected by heat and humidity.

Question 3.244 *What precaution should be observed when using and storing crystal microphones?*

Answer Crystal microphones using Rochelle-salt crystals should be stored in a cool dry place, preferably in a moisture-proof wrapping. Avoid subjecting the microphone to physical shock or mechanical vibrations. If the crystal element is of the polarized ceramic (barium titanate) type, it will withstand much higher temperatures without damage, and no special precautions with regard to temperature need be observed.

4 R-F AMPLIFIERS

Question 3.245 *What is an RFC? Why is it used?*

Answer RFC is an abbreviation for *radio-frequency choke*, which is an inductor having a high reactance at radio frequencies but usually a low reactance at audio frequencies. The significant difference between an RFC and an audio-frequency choke is the much higher inductance that the latter must have in order that its reactance will be high at audio frequencies. Thus, the audio-frequency choke must be much larger in physical size than an RFC, and it must have an iron core in order to realize the needed inductance.

An RFC blocks the flow of r-f current while allowing the passage of d-c and a-f currents. Thus it can be used as a filter, or as part of a filtering network, to remove the r-f component from a circuit. More important, it is used to confine r-f to the desired circuit path while allowing d-c or audio currents to follow a different path.

Question 3.246 *What are the advantages of using a resistor in series with the cathode of a class C r-f amplifier tube to provide bias?*

Answer The cathode resistor is used in class C stages where grid-leak bias is the principal source of bias voltage. The cathode resistor protects the tube from excessive plate current in the event of failure of the r-f excitation voltage. Grid-leak bias exists only when there is an r-f signal to the grid. If this signal is lost, the bias voltage would drop to zero if it were not for the protective voltage drop across the cathode resistor.

The entire bias voltage required for class C operation cannot be obtained from a cathode resistor. That is so because there is no voltage drop across the resistor unless there is plate current, and plate current is cut off during most of the cycle with class C operation. Hence, the cathode resistor is primarily a protective device, most of the bias coming from the grid-leak resistor.

Question 3.247 *What is the difference between r-f voltage amplifiers and r-f power amplifiers in regard to applied bias? What type of tube is generally employed in the r-f voltage amplifier?*

Answer The r-f voltage amplifier is biased class A, whereas the r-f power amplifier is generally biased class B or C. Also, tubes used in power amplifiers are larger and designed to dissipate considerable power.

The pentode tube is generally used in the r-f voltage amplifier because of its relatively high gain and the fact that it generally does not require neutralization. Triodes, tetrodes, and pentodes are used as power amplifiers.

Question 3.248 *Draw a schematic diagram of a grounded-grid r-f amplifier and explain its operation.*

Answer See Fig. 3.248 for a schematic diagram of a grounded-grid r-f amplifier. In the grounded-grid amplifier, signal input is fed to the cathode circuit and output is taken from the plate circuit. The grid is at r-f ground potential, so that it acts as a shield between the input and output circuit. Thus the plate-to-cathode capacitance is small and neutralization is not necessary. A large amount of input signal power is required, but most of it is transferred to the plate circuit as useful output power.

The grounded-grid amplifier is popular for low-signal-level vhf operation. The triode tube will not generate as much noise as a tube with more elements does, and neutralization is not required.

Question 3.249 *Explain the principle involved in neutralizing an r-f stage.*

Answer Neutralization involves reducing to a minimum signal transfer between input and output of a stage through the grid-to-plate capacitance of the tube. This is accomplished by feeding back to the input circuit a voltage from the output circuit which is equal in magnitude but opposite in phase. The two voltages, if exactly equal in magnitude and 180° out of phase, cancel, and the result is complete neutralization.

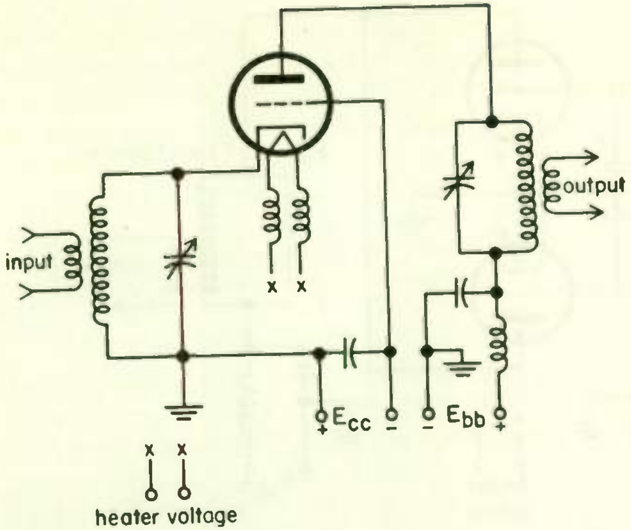

Fig. 3.248 **Grounded-grid amplifier.**

Question 3.250 *Explain, step-by-step, at least one procedure for neutralizing an r-f amplifier stage.*

Answer

1. Remove plate voltage from the stage to be neutralized. Then any signal present in the plate tank circuit is due to interelectrode capacitance coupling between grid and plate passing the grid signal.

2. Tune all preceding transmitter stages including the grid circuit of the stage to be neutralized. This provides a strong signal at the grid of the stage to be neutralized.

3. Connect or couple an r-f indicator to the plate tank circuit of the stage to be neutralized. The indicator may be an oscilloscope, r-f probe, or neon lamp. The more sensitive the indicator, the more complete will be the neutralization.

4. Adjust the neutralizing capacitor for minimum indication on the r-f indicator as the plate tank circuit is tuned through resonance. When the plate tank circuit is at resonance and no indication of r-f is obtained, the r-f currents divide equally between the grid-to-plate capacitance and the neutralizing capacitance. These out-of-phase currents cancel, so that no signal appears in the plate tank circuit.

Question 3.251 *Draw a circuit diagram of a push-push frequency multiplier and explain its principle of operation.*

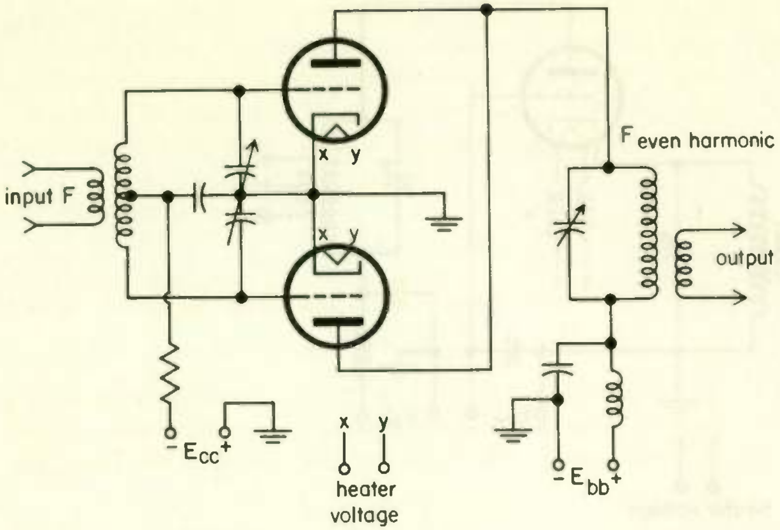

Fig. 3.251 **Push-push frequency multiplier.**

Answer See Fig. 3.251. The grids of a push-push stage are connected in push-pull and the plates are connected in parallel. In the operation of the push-push frequency multiplier, the balanced grid circuit provides out-of-phase signal voltages at the grids of the tubes with an excitation signal. Since one grid has a positive voltage applied, this tube will conduct and produce a voltage pulse in the plate circuit while the other tube, which has a negative voltage applied to the grid, will remain cut off.

When the excitation signal is reversed, the previously conducting tube will cut off and the opposite tube will conduct and produce a voltage pulse in the plate circuit. Because both plates are connected in parallel, a single cycle of the input frequency will produce two cycles in the output circuit; hence the frequency has automatically been doubled. The output circuit can be tuned to any desired even harmonic of the input frequency. The fundamental and all odd harmonics are eliminated in the output.

Question 3.252 *Push-pull frequency multipliers normally produce what order of harmonics—even or odd?*

Answer Push-pull frequency multipliers normally produce odd-order harmonics. The input signal is applied out of phase to the grids of a push-pull stage. The plate current of one tube will increase while the plate current of the other tube decreases. When operated as a frequency multiplier, class C operation is used. Then the varying plate current is badly distorted because both tubes operate over more than the linear portions of their dynamic curves. The second and all even harmonics of this distortion cancel out because they are opposite in phase in the two tubes. Odd harmonics do not cancel out.

5 TRANSISTORS

Question 3.253 *What is the difference between forward and reverse biasing of transistors?*

Answer The difference between forward and reverse biasing of transistors is that forward bias permits current to flow through the junction, whereas reverse bias prevents any appreciable current from flowing through the junction.

Forward biasing is the application of an external emf to a PN junction of such polarity as to cause the barrier region to narrow, permitting current to flow through the junction. Reverse biasing is the application of an external emf to a PN junction of such polarity as to cause the barrier region to widen and prevent majority current carriers from moving through the junction.

Figure 3.253(a) shows forward biasing and Fig. 3.253(b) reverse biasing. To forward-bias a transistor junction, connect the positive side of the emf to the P-type material of the semiconductor and connect the negative side of the emf to the N-type material.

Question 3.254 *Show connections of external batteries, resistance load, and signal source as they would appear in a properly (fixed) biased common-emitter transistor amplifier.*

Answer The required circuit using a PNP-type transistor is shown in Fig. 3.254. In this circuit the required forward bias for the base-emitter junction is obtained by electron flow from the negative terminal of the base bias battery V_{BB} through the base current limiting resistor R_B, through the base-emitter junction, through the emitter-stabilizing resistor R_E, and back to the positive terminal of the bias battery V_{BB}. The base bias voltage is the voltage that appears between the base and emitter. It is usually between 0.1 and 0.2 volt.

The required reverse bias for the collector-emitter junction is obtained by electron flow from the negative terminal of the collector bias battery

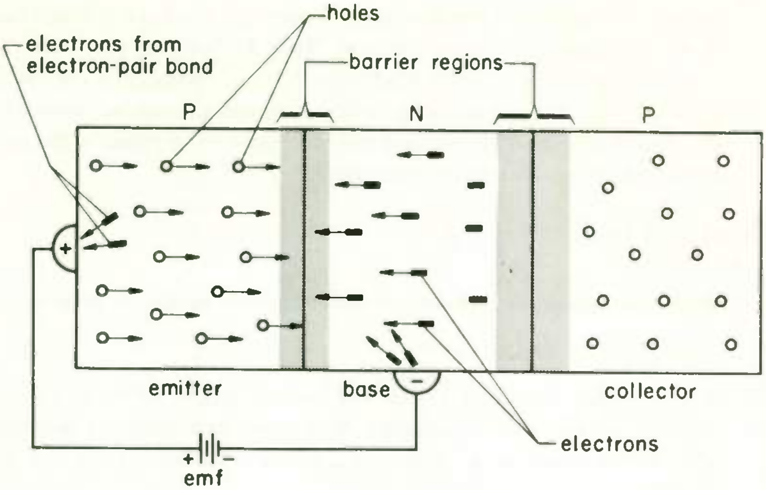

(a) Forward biasing

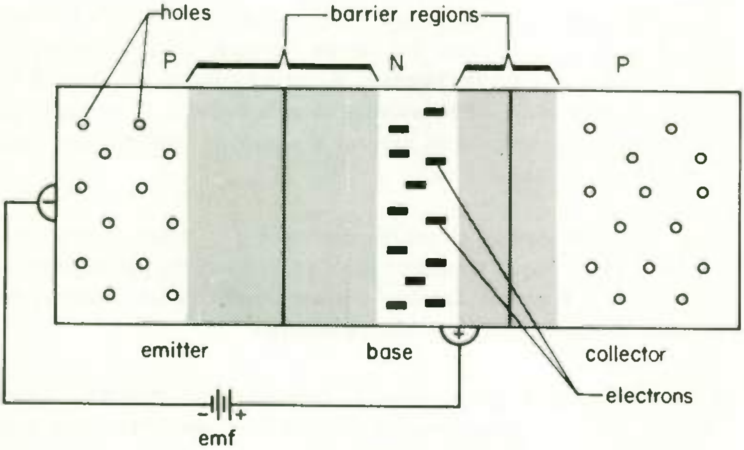

(b) Reverse biasing

Fig. 3.253 Biasing of a PN junction (emitter-to-base).

V_{CC}, through the collector load resistor R_L, into the collector, through the base, into the emitter, through the emitter-stabilizing resistor R_E, and back to the positive terminal of the collector bias battery V_{CC}.

When a positive half-cycle of voltage is applied from the signal source through capacitors C_C and C_E to the base-emitter junction of the transistor, the bias current decreases and causes the collector current to decrease. Because the current through the collector must also flow through the collector load resistor R_L, the voltage drop across this resistor is reduced and results in a higher negative voltage across the collector-emitter junction.

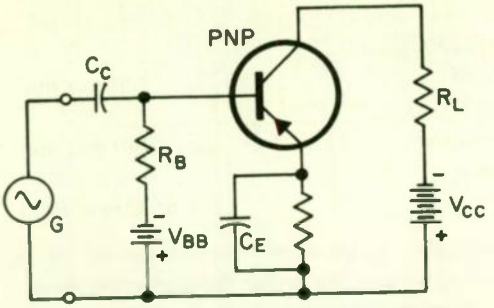

G	**Signal source**
C_c	**Coupling capacitor**
R_B	**Base-biasing resistor**
R_E	**Emitter-stabilizing resistor**
R_L	**Collector load resistor**
V_{BB}	**Base-emitter supply voltage**
V_{CC}	**Collector-emitter supply voltage**
PNP	**PNP-type transistor**

Fig. 3.254 Properly biased common-emitter transistor amplifier.

When the negative half-cycle of voltage is applied from the signal source to the base-emitter junction, the bias current increases and causes the collector current to increase. The voltage drop across collector load resistor R_L is increased, resulting in a less negative voltage across the collector-emitter junction.

The description of operation shows that a voltage phase reversal of 180° occurs between the input and output of the circuit. This is characteristic of the common-emitter amplifier. Because of the forward signal transfer ratio of this type of amplifier, a small change in base current results in a large change in collector current. Current gain is also characteristic of the common-emitter amplifier.

The purpose of the emitter-stabilizing resistor R_E is to provide thermal stability of the base-emitter bias current through current feedback, while capacitor C_E provides an a-c ground for the emitter to prevent degeneration. Capacitor C_C is used to couple the signal source to the amplifier and to prevent the base-emitter bias current from being shorted out by the signal source.

Question **3.255** *The following are excerpts from a transistor handbook describing the characteristics of a PNP alloy-type transistor as used in a common-emitter circuit configuration. Explain the significance of each item.*

Maximum and Minimum Ratings:

Collector-to-base voltage (emitter open)	*–40 max volts*
Collector-to-emitter voltage (base-to-emitter volts = 0.5)	*–40 max volts*
Emitter-to-base voltage	*–0.5 max volts*
Collector current	*10 max ma*

Transistor dissipation:	
At ambient temperature of 25°C	
for operation in free air	*120 max mw*
At case temperature of 25°C	
for operation with heat sink	*140 max mw*
Ambient temperature range:	
Operation and storage	*−65°C to + 100°C*

Answer Maximum ratings specify the electrical or thermal ratings of the transistor, which are limiting values and define the maximum stresses beyond which either the initial performance or service life is impaired.

The *collector-to-base voltage* (*emitter open*) is the breakdown voltage between collector and base with a reverse voltage applied and the emitter circuit open.

The *collector-to-emitter voltage* (*base-to-emitter voltage* = *0.5*) is the breakdown voltage between collector and emitter with a reverse voltage applied to this junction and a forward bias of 0.5 volt applied to the emitter-base junction.

The *emitter-to-base voltage* is the breakdown voltage between emitter and base with a reverse voltage applied to the junction.

The *collector current* is the value which, if exceeded, may cause a collector-to-emitter short.

Transistor dissipation at ambient temperature of 25°C for operation in free air is the maximum value of power that can be safely dissipated by the transistor when the surrounding temperature does not exceed 25°C. If the transistor is operated in an area where temperatures above 25°C may be encountered, it must be derated linearly at a specified rate of milliwatts per degree centigrade increase in ambient temperature. The derating will normally be specified on the transistor data sheet.

Transistor dissipation at case temperature of 25°C for operation with a heat sink is the largest permissible value of power that can be thermally conducted and dissipated and implies the use of an infinite heat sink. Above 25°C this value must also be derated, and the derating will normally be specified on the transistor data sheet.

Ambient temperature range for operating and storage is a minimum and maximum rating of temperature within which no electrical characteristic degredation will occur. Storage or operation beyond these limits will cause thermal or mechanical stresses which will damage the transistor.

Question 3.256 *Draw a circuit diagram of a method of obtaining self-bias with one battery, without current feedback, in a common-emitter amplifier. Explain the voltage drops in the resistors.*

Answer See Fig. 3.256. To operate the common-emitter amplifier from a single battery, a voltage divider is generally used to provide the proper forward bias between emitter and base. For the PNP transistor amplifier shown, the base must be made negative with respect to the emitter. This is achieved by the voltage divider consisting of resistors R_l and R_2.

Electron flow is from the negative terminal of the battery, through resistor R_1, through resistor R_2, and back to the positive terminal of the battery. The voltage drop across resistor R_1 is then negative at the negative terminal of the battery and positive at the transistor base end. The voltage drop across resistor R_2 is such that the polarity at the transistor base end is negative and the polarity at the positive terminal of the battery is positive. Since the transistor emitter is also connected to the positive terminal of the battery, the polarity of the voltage drop across resistor R_2 satisfies the requirement that the base be made negative with respect to the emitter.

The voltage drop across resistor R_1 determines the magnitude of forward bias voltage across resistor R_2 and therefore across the emitter-base junction. The voltage drop across resistor R_l establishes the magnitude of voltage across the collector-emitter junction.

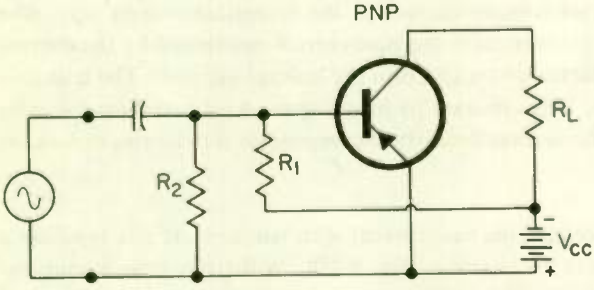

R_1, R_2	**Base-biasing resistors**
R_L	**Collector load resistor**
V_{CC}	**Supply voltage**
PNP	**PNP-type transistor**

Fig. 3.256 **Method of obtaining self-bias with one battery.**

Question 3.257 *Draw a circuit diagram of a common-emitter amplifier with emitter bias. Explain its operation.*

Answer See Fig. 3.257. Because of capacitor C_l the emitter is at ground potential to the signal, although at a positive d-c potential. The collector-emitter junction is reverse-biased, since the negative terminal

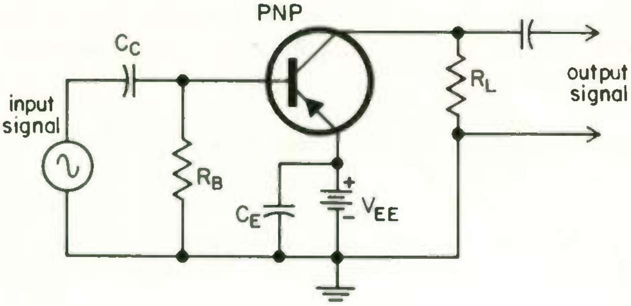

Fig. 3.257 **Common-emitter stage with bias battery in emitter lead.**

of V_{EE} connects to the collector through R_L and the positive terminal connects to the emitter. The base-emitter junction is forward-biased, the base-biasing current flowing from negative terminal of V_{EE} through the base bias current-limiting resistor R_B and then through the base-emitter junction back to the positive side of V_{EE}.

Question 3.258 *Why is stabilization of a transistor amplifier usually necessary? How would a "thermistor" be used in this respect?*

Answer Collector current in a common emitter circuit will vary widely with temperature variations if stabilization is not used. This causes operation to swing off the straight portion of the characteristic curve, resulting in distortion in the signal output.

The main cause of the increase in collector current is an increase in emitter-collector leakage current as the transistor warms up. The collector current is equal to the base current multiplied by the current gain (I_B) of the transistor (β), plus the leakage current. The collector current can be kept constant by lowering the base current sufficiently so that βI_B decreases sufficiently to compensate for the rise in leakage current.

One way to decrease the base current with temperature rise is to use a thermistor, as in the circuit of Fig. 3.258. A thermistor is a temperature-sensitive resistor with a negative temperature coefficient. This means that its resistance decreases with an increase in temperature.

Without the thermistor in Fig. 3.258 the base current is held constant, and is approximately equal to V_{CC}/R_1. With a thermistor in the circuit, the constant current through R_1 divides, part flowing into the base of the transistor to form the base bias current, and part flowing through the thermistor. As the temperature increases, the thermistor resistance decreases. As a result, more of the current flows through

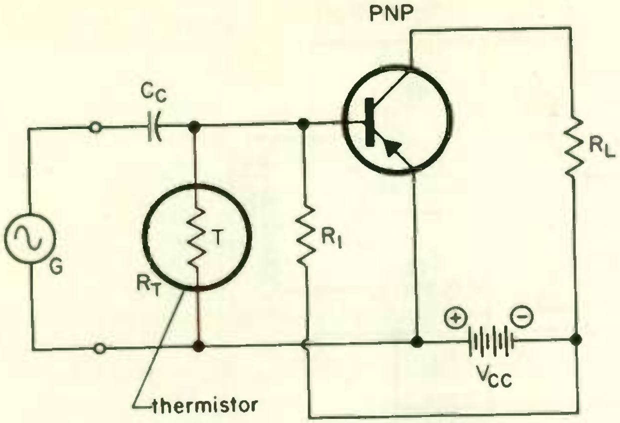

Fig. 3.258 **Use of thermistor for stabilization of PNP transistor common-emitter amplifier.**

the thermistor, leaving less for the base bias current. With suitable component values, the decrease in collector current caused by the decreased base current is equal to the increase in the leakage collector current. As a result the collector current stays constant with temperature variations.

3.259 *Draw simple schematic diagrams of the following transistor circuits and explain their principles of operation. Use only one voltage source; state typical component values for low-power 10-mc operation:*

Question a *Colpitts-type oscillator*
b *Class B push-pull amplifier*
c *Common-emitter amplifier*
d *A PNP transistor directly coupled to an NPN type*

Answer a See Fig. 3.259A for the circuit and typical component values for a 10-mc Colpitts-type oscillator using an NPN transistor. The base bias current is obtained from the voltage divider consisting of resistor R_1 and resistor R_2 connected across the voltage source V_{cc}. Electrons flow from the negative terminal of the voltage source, through resistor R_1, through R_2, and back to the positive terminal of the voltage source. Since the base is connected at the junction of resistors R_1 and R_2, the voltage drop across resistor R_1 is applied as bias between base and emitter. Collector-to-emitter voltage is supplied from the voltage source through the collector load resistor R_C and emitter-stabilizing resistor R_E.

The amount of collector current is determined primarily by the base-

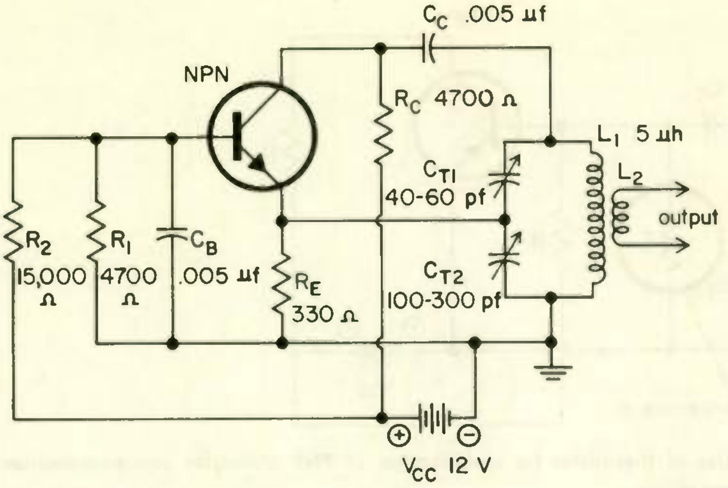

Fig. 3.259A 10-mc. Colpitts-type oscillator.

emitter current, rather than by the voltage between collector and emitter.

Inductor L_1 and the split capacitor C_{T1}–C_{T2} form the oscillator tank circuit, which determines the frequency of oscillations. The signal voltage formed across C_{T2} is applied to the base-emitter junction through C_B for the feedback required to sustain oscillations. The tank circuit is shunt-fed in the drawing; R_C blocks the r-f output from the transistor, so that the r-f goes through C_C to excite the tank circuit.

Answer b See Fig. 3.259B for a circuit and typical component values for a 10-mc class B push-pull amplifier. The push-pull amplifier consists essentially of two transistors connected back to back, with both transistors biased for class B operation, which is near, but not at, cutoff.

The 10-mc input transformer T_1 has its secondary winding resonated by capacitor C_1. The signal source is applied to the untuned primary winding and is inductively coupled to the secondary winding, which is center-tapped to provide 180° out-of-phase signals to the bases of the transistors. The transistor bases are tapped down from the ends of the secondary winding to provide selectivity by preventing excessive loading of the tuned circuit (which would reduce the Q). The 10-mc output transformer T_2 has its primary winding resonated by capacitor C_2, and it is center-tapped to provide a balanced load for the transistors.

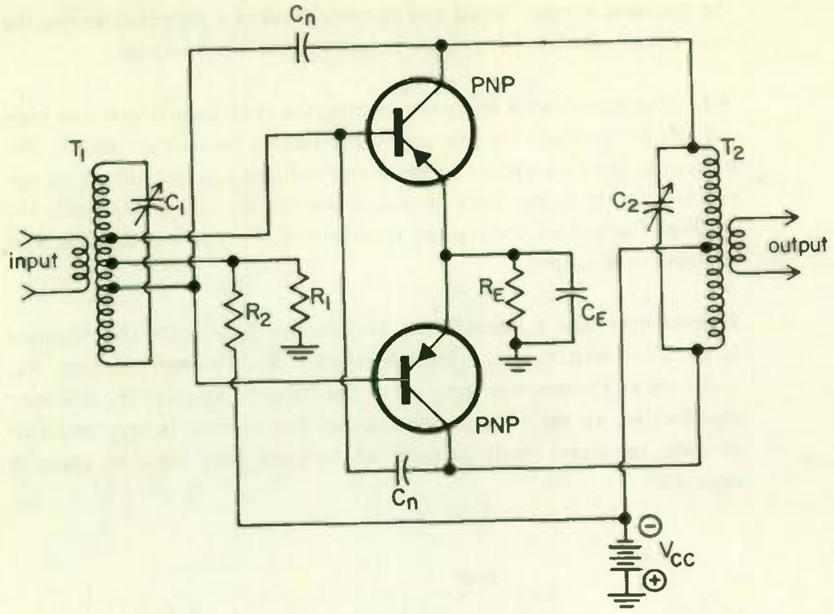

R_1, R_2	Bias voltage dividers, 47 Ω, 18,000 Ω
R_E	Stabilizing resistor, 10 Ω
C_1, C_2	Tuning capacitors, 50 pf
C_n	Neutralizing capacitors, 4.7 pf
C_E	Bypass capacitor, 0.005 μf
T_{1sec}, T_{2pri}	Tuning inductors, 5 μh
V_{cc}	Battery, 12 volts

Fig. 3.259B 10-mc class B push-pull amplifier.

Neutralization is accomplished by cross-connecting the collector of one transistor with the base of the other transistor through neutralizing capacitor C_n, and vice versa, to feed back a signal 180° out of phase with the in-phase signal fed back through the collector-to-base capacitance of the individual transistors. Stabilizing resistor R_E provides current feedback for both transistors to help temperature-stabilize the bias point. Bypass capacitor C_E effectively places both transistor emitters at ground potential for signal purposes.

When a signal is applied to the input, the base voltage on one transistor (the one which has the negative half-cycle applied, since PNP transistors are used in this circuit) will increase. This will increase the base-emitter current and therefore the collector current. At the same time, the bias on the other transistor is reversed so that the base potential becomes more positive than the emitter potential. No base-emitter current will flow and no collector current will flow through this transistor. The conducting transistor causes a magnetic field to build up in the resonant output circuit and thereby develop a potential across the tank circuit which is of opposite polarity to the input voltage.

When the input signal reverses polarity, the transistor which had been cut off conducts and the previously conducting transistor cuts off. The current in the tank circuit reverses and induces a large voltage of opposite polarity in the tank circuit. Since the circuit is balanced, the push-pull action of the output transformer T_2 eliminates even harmonics in the output.

Base-emitter bias is established by electron flow from the negative terminal of battery V_{cc}, through resistor R_2, through resistor R_1, and back to the positive terminal of the battery. Resistor R_1 is a very small value, so the voltage drop across this resistor is very small to provide the very small amount of forward bias used in class B operation.

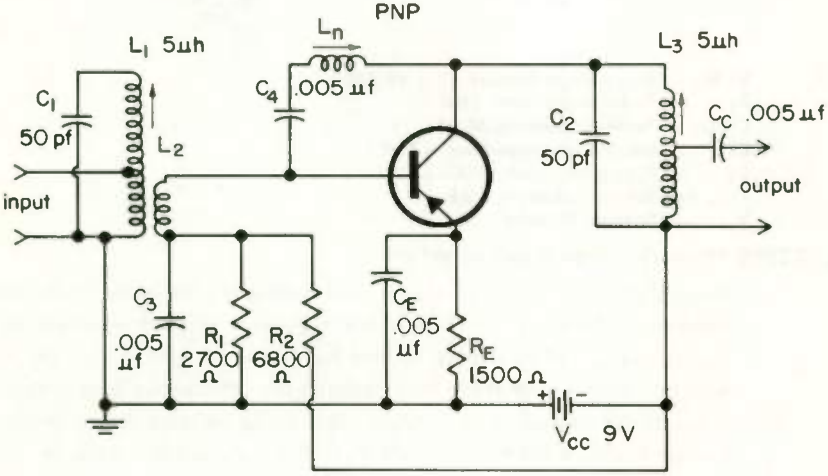

R_1, R_2	Base-biasing resistors (voltage divider)
R_E	Emitter-stabilizing resistor, 1500Ω
C_1, C_2	Tuning Capacitors, 50 pf
C_3, C_E	Bypass capacitors, 0.005 µf
C_4	Blocking capacitor, 0.005 µf
C_c	Coupling capacitor, 0.005 µf
L_1, L_3	Tuning inductors, 5 µh
L_2	Coupling link
L_n	Neutralizing inductor
V_{cc}	Battery, 9 volts
PNP	PNP transistor

Fig. 3.259C 10-mc common-emitter amplifier.

Answer c See Fig. 3.259C for a circuit and typical component values for a 10-mc common-emitter amplifier. Forward bias for the base-emitter junction is obtained from the voltage divider consisting of resistors R_1 and R_2, as described for preceding circuits. Collector-emitter voltage is obtained by electron flow from the negative terminal of battery V_{cc} through inductor L_3, into the collector, through the base, through the emitter, through the emitter-stabilizing resistor R_E and back to the positive terminal of the battery. Capacitor C_1 and inductor L_1 comprise the 10-mc tuned input circuit, and capacitor C_2 and inductor L_3 comprise the 10-mc tuned output circuit.

A signal voltage is applied to a portion of the input tuned circuit at the tap on inductor L_1. This is done to match a low-impedance signal source to the high impedance of the tuned circuit to provide selectivity in the input circuit. By autotransformer action, the small signal voltage develops a high voltage in the resonant circuit. Inductor L_1 is inductively coupled to inductor L_2 as a step-down transformer to match the relatively low input impedance of the transistor. Bypass capacitor C_3 effectively grounds the end of inductor L_2 opposite the base for signal purposes, while bypass capacitor C_E puts the emitter at ground potential for signal purposes. Voltage is coupled out of the circuit through coupling capacitor C_c, which is tapped down on the tuned circuit to match a low-impedance load to the high impedance of the transistor output circuit.

Neutralizing in this circuit is accomplished by neutralizing inductor L_n, which is connected between collector and base and resonates with the collector-to-base capacitance of the transistor at 10-mc to provide a high impedance between the base and collector. The neutralizing inductor is necessarily a large inductance because the collector-to-base capacitance is very small. Blocking capacitor C_4 serves merely to keep the base and collector voltages isolated. Stabilizing resistor R_E provides current feedback to stabilize the base bias against temperature variations.

Answer d See Fig. 3.259D for a circuit and typical component values of a PNP transistor directly coupled to an NPN type. The PNP stage corresponds to that of Fig. 3.259C, and the discussion of that circuit applies here. Notice particularly in Fig. 3.259D how a negative voltage is applied to the collector of the PNP and a positive voltage to the collector of the NPN from the same battery. This requires that the two emitters connect to opposite sides of the power supply, as shown.

The collector current to the PNP transistor passes through R_3. The

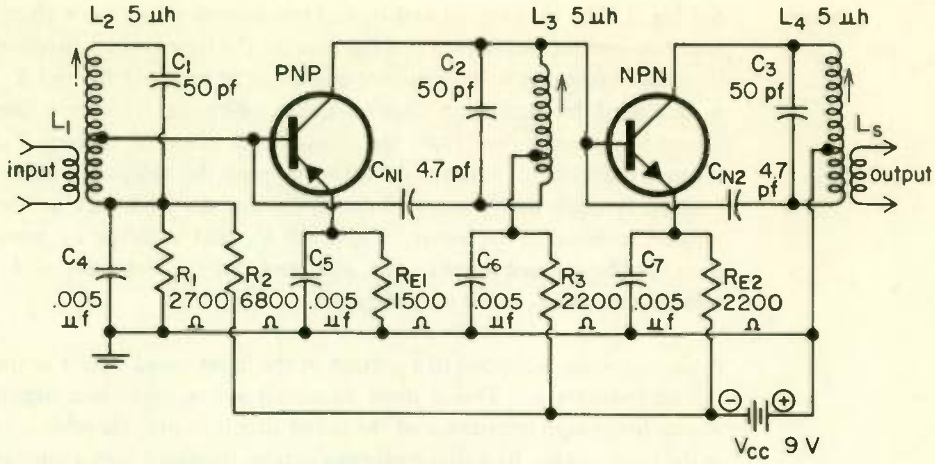

R_1, R_2	PNP biasing resistors (voltage divider)
R_3	NPN biasing resistor
R_{E1}, R_{E2}	Emitter-stabilizing resistors
C_1, C_2, C_3	Tuning capacitors, 50 pf
C_4, C_5, C_6, C_7	Bypass capacitors, 0.005 µf
L_2, L_3, L_4	Tuning inductors, 5 µh
C_{N1}, C_{N2}	Neutralizing capacitors, 4.7 pf
V_{cc}	Battery, 9 volts

Fig. 3.259D A PNP transistor directly coupled to an NPN type as a 10-mc amplifier.

resulting voltage drop across R_3 furnishes base bias current to the NPN stage. The current direction through R_3 is such as to make the top of this resistor positive with respect to the bottom, so that the NPN base-emitter junction is forward-biased.

3.260 *Discuss etched-wiring printed circuits with respect to the following:*

Question a *Determination of wiring breaks*

b *Excessive heating*

c *Removal and installation of components*

Answer a Voltage and resistance measurements can be made on etched-wiring printed circuits in the same way and by using the same techniques as with conventionally wired circuits to determine wiring breaks. Voltage measurements may be preferable to resistance measurements, because it is possible to destroy a transistor by the application of reverse bias from an ohmmeter and because readings may be misleading owing to transistor internal resistance. Once a break has been determined, it can be found by visual inspection. A magnifying glass may be necessary. The use of a light on the reverse side of the printed circuit can also be an aid in finding breaks visually. To repair a break, a small piece of tinned solid copper wire may be bridged over the break and soldered in place.

Answer b In working with etched-wiring printed circuit boards it is recommended that a lightweight 25- to 35-watt pencil-type soldering iron be used along with a low-melting-point rosin-core solder containing 60 per cent tin and 40 per cent lead. Excessive heating may cause the etched circuit to pull away from the board. Components that normally run hot should be mounted on heat sinks or spaced away from the board to avoid warping the board and causing breaks in the wiring.

Answer c When removing smaller components such as resistors and capacitors, the leads should be cut as close as possible to the body of the component. The leads of the replacement component can then be looped around the remaining leads protruding from the board and soldered. An alternative method is to cut the leads of the defective component and then heat the remaining leads and pull them through from the etched side of the board. The replacement component can be inserted through the original holes and soldered on the etched side of the board. A third method is to remove most of the solder from the leads of the defective component by heating with a soldering iron, brushing the solder away with a wire brush, and then reheating and pulling the leads out from the top side of the board. Again the replacement component is inserted in the original holes and soldered on the etched side of the board.

To remove larger components such as i-f transformers and potentiometers, the lugs that protrude through the bottom of the board should be clipped away and the connections heated alternately while gently pulling on and rocking the defective component. When enough clearance has been obtained on the component side of the board, the lugs can again be clipped and the component removed. The lugs remaining on the board can be heated and pulled through from the top of the board. The holes must then be cleaned so the replacement component can be inserted in the same holes. The lugs of the replacement component can be gently twisted to hold the component firmly in place while it is being soldered.

Question 3.261 *What is a junction tetrode transistor? How do transistors of this type differ from other transistors in base resistance and operating frequency?*

Answer The junction tetrode transistor has four terminals; the conventional transistor has three. The four terminals are the emitter, collector, and two base terminals. The construction of the junctions is similar to that in the conventional transistor, and the junctions biased in the same manner except that the second base terminal has a large reverse bias whereas the first base terminal has a small forward bias.

Junction tetrode transistors are available as either PNP or NPN types. They differ from ordinary transistors in that the base resistance is lower, the capacitances are smaller, and the maximum operating frequency is higher. These differences are due to the potential on the second base terminal forcing the majority carriers through a small region of the base. In the conventional transistor the majority carriers move through the whole base area with resulting higher resistance and capacitances.

Figure 3.261A shows the proper biasing arrangement for a PNP tetrode transistor and the path of majority carriers through the junction. Figure 3.261B shows a typical PNP tetrode transistor amplifier.

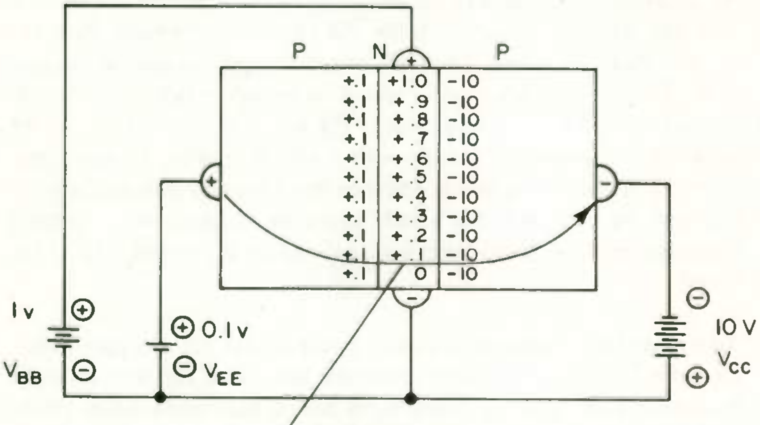

movement of carriers restricted to this region

Fig. 3.261A Biasing arrangement for a PNP tetrode transistor.

base has two terminals

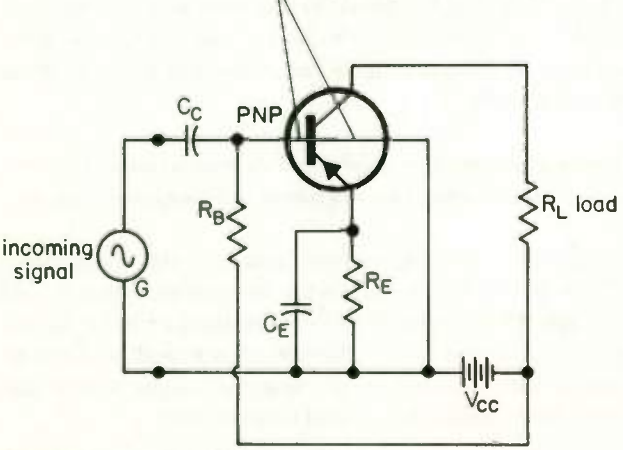

Fig. 3.261B Typical PNP tetrode transistor amplifier.

YOUR PROGRESS REVIEW AND FCC LICENSE CHECK

EXAMINATION

Circle the number of the correct answer for each question that follows. When you are finished, transfer the answers to the answer sheet by putting X's in the proper squares. When the graded answer sheet is returned to you, correct in this book any questions you may have missed. By doing so, you will have a record of the correct answers to all questions for review purposes.

1. In Fig. E.1 the purpose of R_1 and R_2 is to
   (1) provide a load for the amplifier stage.
   (2) provide proper base bias.
   (3) reduce the high input impedance of the transistor.
   (4) provide transistor base current saturation.

2. In Fig. E.1, the base of the transistor is maintained at ________________ ________ potential with respect to the emitter of the transistor.
   (1) The same
   (2) A small positive (much less than 1 volt)
   (3) A small negative (much less than 1 volt)
   (4) A positive potential (over 1 volt)
   (5) A negative potential (over 1 volt)

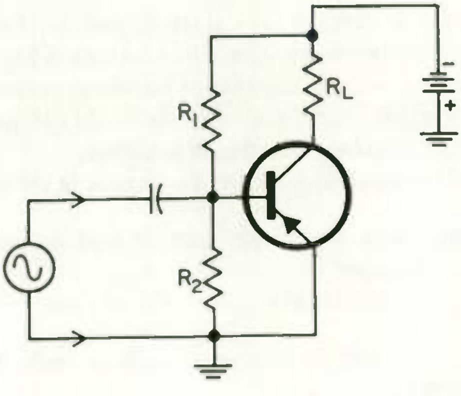

Fig. E.1

3. In Fig. E.1 the purpose of R_L is to provide
   (1) base bias.
   (2) the load for the stage.
   (3) a d-c return for the input signal.
   (4) emitter bias.

4. In transistor circuitry, it is often desirable to use voltage measurements rather than resistance measurements because
   (1) voltmeters are simpler to use than ohmmeters.
   (2) the resistance values encountered in transistor circuitry are generally too low to be accurately measured with an ohmmeter.
   (3) the voltages present in transistor circuitry may damage the ohmmeter.
   (4) accidental wrong-polarity bias may be applied by an ohmmeter and that could destroy a transistor.

5. Etched-wiring circuit boards should be repaired with a low-wattage soldering iron and low-temperature solder
   (1) to avoid burning the board.
   (2) to avoid accidental unsoldering of adjacent circuitry.
   (3) because low soldering temperatures minimize pulling away of the copper foil from the board.
   (4) because low soldering temperatures minimize the danger of fire.

6. The gain from a triode stage will approach the amplification factor of the tube if the
   (1) plate load impedance is many times the plate resistance of the triode.
   (2) load impedance is equal to the plate resistance.
   (3) load impedance is twice the plate resistance.
   (4) stage is operated class C.

7. Comparing the features of typical triode and tetrode tubes,
   (1) the interelectrode capacitance of a tetrode is higher.
   (2) the tetrode is usually capable of handling greater plate current for a given voltage than a comparable triode can handle.
   (3) the overall efficiency of a triode is higher.
   (4) the triode is more suitable than a tetrode in r-f applications.

8. A vacuum tube with a cathode, control grid, screen grid, suppressor grid, and plate is called a
   (1) diode. (2) triode. (3) tetrode. (4) pentode.

9. When replacing small components, such as resistors and capacitors, on printed boards,
   (1) push component leads through board eyelets and cut off level with other side of board.
   (2) the leads should be kept short with the component mounted close to the board.
   (3) the mounting procedure is not overly critical as long as the component will physically fit.
   (4) use a high-temperature solder for maximum joint strength.

10. When used as an audio amplifier, a triode tube requires neutralization, whereas a tetrode or pentode type does not.
    (1) True (2) False

11. The primary of an audio output transformer has 8000 turns. The secondary has 200 turns. If the input resistance to the transformer is 16,000 ohms, the transformer is satisfactory for matching to a load impedance of 10 ohms.
    (1) True (2) False

12. When several amplifiers have a common power supply, a network of resistors and capacitors is often used between the common power supply point and the plate circuit of each amplifier tube. These networks are called
    (1) tuned circuits.
    (2) voltage-regulator networks.
    (3) decoupling networks.
    (4) multistage networks.

13. A class A audio amplifier uses cathode bias. If the cathode bypass capacitor is removed,
    (1) distortion is greatly increased.
    (2) the gain of the amplifier is increased.
    (3) the gain of the amplifier is reduced.
    (4) the amplifier is inoperative.

14. Of the following types of noise generated within a vacuum tube, which is *not* commonly called random noise?
    (1) Noise generated by an uneven emission of electrons from the cathode
    (2) Thermal noise generated by electron flow in the tube's control grid circuit
    (3) Harmonic interference
    (4) Partition noise, generated by random variations in the spacing between electrodes of the tube

15. An audio transformer has 4 times as many turns on the primary as on the secondary.
    (1) This transformer would be used to couple a high-impedance source to a lower-impedance load.
    (2) This transformer would be used to couple the output of one stage to the grid of the following class A stage.
    (3) This transformer would be used to couple stages having equal impedances.
    (4) If the plate impedance of the output tube is 5000 ohms, the transformer is satisfactory to drive a loudspeaker with an impedance of 8 ohms.

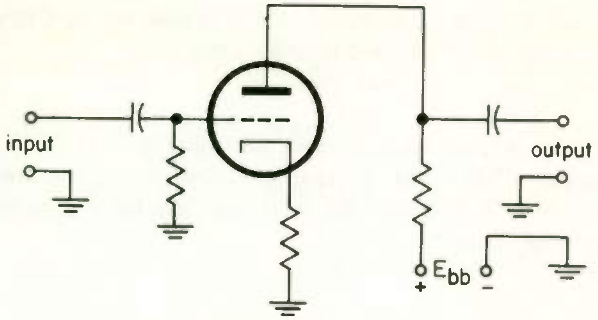

Fig. E.2

16. A class B amplifier is biased so that grid current flows during part of the positive half-cycles of the input-signal waveform. Compared with a class A amplifier,
    (1) the input impedance of such an amplifier is considerably higher than that of the class A amplifier.
    (2) the stage providing the input signal must be capable of supplying power to the driven stage.
    (3) no appreciable difference exists in the requirements of the stage providing input power.
    (4) since a portion of the positive half of the input signal is called upon to deliver power, the center tap of the primary of the interstage transformer should be off center (toward the ground) to provide additional needed power.

17. The minimum change(s) in Fig. E.2 to make the circuit operate satisfactorily as an a-f amplifier with good voltage gain
    (1) is to add a capacitor between cathode and ground.
    (2) is add a capacitor between cathode and ground and a resistor between control grid and ground.
    (3) are none—no changes are required.
    (4) are to add a resistor between control grid and ground and change the tube from a triode to a pentode.

18. With a tetrode- or pentode-type tube operating class A, cathode current is the sum of plate current and screen grid current.
    (1) True (2) False

19. Which of the following types of bias is not practical in an audio amplifier?
    (1) Battery bias
    (2) Cathode bias
    (3) Grid-leak bias
    (4) Power supply bias
    (5) A combination of cathode and battery bias

20. If the grid bias of an amplifier is so adjusted that plate current flows for substantially less than 50 per cent of the time, the stage is said to be operating
(1) class A. (2) class B. (3) class C.

21. Which of the following is *not* likely to cause saturation of an output transformer?
(1) Excessively strong primary signal
(2) Push-pull operation
(3) D-c plate current which flows through the primary
(4) Selection of too small an output transformer

22. When an audio signal is distorted, which of the following is *not* likely to occur?
(1) The output waveform differs from the input waveform.
(2) A large number of unwanted harmonics are produced.
(3) Correction of the distortion can be accomplished in a following stage.
(4) The output signal is likely to sound raspy or noisy.

23. With a given signal applied to the primary of an audio transformer, an increase in primary current does not appreciably further increase the flux. This condition is called
(1) distortion. (3) core saturation.
(2) normal operation. (4) current cancelation.

24. When battery bias is applied to the grid of a tube in series with the secondary winding of a transformer, a capacitor is placed in parallel with the battery. The purpose of that capacitor is to
(1) protect the battery.
(2) protect the tube in the event of battery failure.
(3) provide a low-impedance path for the signal developed in the secondary of the transformer to follow.
(4) reduce harmonic generation.

25. With a certain type of triode, cutoff grid bias for 800 volts on the plate is -35 volts. Initially the instantaneous grid voltage applied to this triode is -42 volts. If the instantaneous value of the grid voltage changes to -75 volts,
(1) plate current increases.
(2) plate current decreases.
(3) plate current is zero.
(4) the tube will probably be damaged severely.

26. In a class C amplifier, plate current flows only during that part of the cycle when the instantaneous value of plate voltage is low.
(1) True: this is why the efficiency is high.
(2) False; if this were true, the power output would be low.

27. When the grid bias of an audio amplifier is so adjusted that plate current flows only during 50 per cent of the applied input signal, the stage is said to be operating
(1) class A. (2) class B. (3) class C.

28. Of the following types of amplifier, which would be the one to use after an r-f oscillator for the best frequency stability?
(1) Class A (2) Class B (3) Class C

29. Which of the following types of bias cannot be used for a class A audio amplifier?
(1) Battery (3) Power supply (5) Cathode
(2) Grid leak (4) Voltage divider

30. With respect to class B amplifiers, which of the following statements is *not* correct?
(1) Two tubes are required for class B audio-frequency operation.
(2) Only one tube is required for class B radio-frequency operation.
(3) Neutralization is never required if a push-pull circuit is used.
(4) Operation of a class B amplifier is more efficient than that of a class A amplifier.

31. Of the following types of amplifier, which has the lowest voltage gain?
(1) Class A amplifier with cathode resistor bias
(2) Class B push-pull amplifier
(3) Class C amplifier with grid-leak bias
(4) Cathode follower

32. What minimum changes are required for the circuit shown in Fig. E.3 to function properly as a push-pull audio amplifier driven by a phase inverter?
(1) Remove C_1, C_4, and C_8, connect R_8 to the plate of V_2, and connect R_9 to the plate V_3.
(2) Remove C_1, C_4, C_5, and C_8, connect R_8 to the plate of V_2, and connect R_9 to the plate of V_3.
(3) Remove C_1.
(4) Remove C_1, C_4, C_5, C_6, C_7, C_8, R_8, and R_9 and connect the primary circuit of the output transformer to the plates of V_2 and V_3.

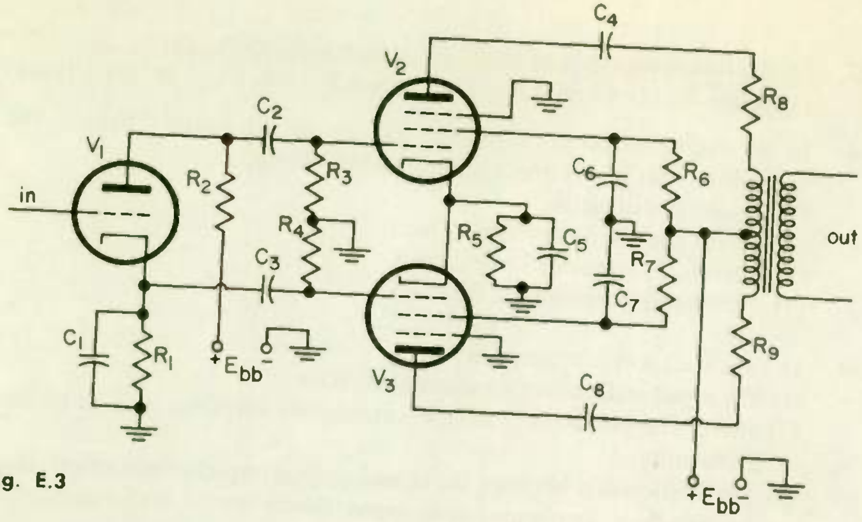

Fig. E.3

(5) No changes are required.

(6) Remove C_4, C_5, C_8, R_8, and R_9 and connect the primary circuit of the output transformer to the plates of V_2 and V_3.

(7) Remove C_1, C_4, C_5, C_8, R_8, and R_9 and connect the primary leads of the output transformer to the plates of V_2 and V_3.

33. Which of the following types of bias requires the use of a resistor in the cathode circuit of a vacuum tube?
(1) Battery
(2) Grid-leak
(3) Power supply
(4) Voltage-divider
(5) Cathode

34. Of the following circuits, which normally provides highest power gain with minimum distortion?
(1) Class A amplifier with cathode resistor bias
(2) Cathode follower
(3) Class A push-pull amplifier
(4) Two class A amplifiers operated in parallel

35. The efficiency of a class A push-pull audio amplifier is approximately
(1) 25 per cent. (2) 40 per cent. (3) 60 per cent. (4) 85 per cent.

36. When two tubes are connected as a class A push-pull amplifier,
(1) the cathodes must be well bypassed to ground for proper operation.
(2) negative feedback is introduced if the cathodes are not bypassed to ground.
(3) distortion is lower than with two class A amplifiers connected in parallel.
(4) odd-harmonic distortion is reduced considerably.

37. Of the following types of amplifier, which is least efficient?
    (1) Class A (2) Class AB_1 (3) Class AB_2 (4) Class B (5) Class C

38. In an audio-frequency amplifier, failure to adequately bypass the cathode so that it is at ground potential to the signal,
    (1) results in distortion.
    (2) makes the amplifier inoperative.
    (3) introduces regenerative feedback.
    (4) introduces degenerative feedback.

39. In a cathode follower amplifier
    (1) the input and output signals are in phase.
    (2) there is regenerative feedback, causing the amplifier gain to be less than unity.
    (3) the relationship between input and output impedance is often used to match a low-impedance input device to a high-impedance output device.
    (4) the power gain is always less than unity.

40. The major function of a phase inverter is to
    (1) match the impedance of a low-impedance source to the high-impedance grid circuits of a push-pull amplifier.
    (2) provide 180° phase shift to properly drive a push-pull amplifier.
    (3) provide power gain.
    (4) provide voltage gain.

41. In a cathode-follower amplifier the
    (1) grid is at signal ground, the input is applied to the cathode circuit, and the output is taken from the plate circuit.
    (2) cathode bias resistor must be well bypassed for proper operation.
    (3) input impedance is extremely low and the output impedance is relatively high.
    (4) power gain is good.

42. The notations AB_1 and AB_2 are often used to describe amplifiers. Which of the following statements most accurately describes the difference between the two types of amplifier?
    (1) A class AB_1 amplifier for audio-frequency operation requires the use of only one tube, while AB_2 requires two tubes.
    (2) A class AB_1 amplifier is biased and driven in such a manner that at no time during the cycle the grid draws current; a class AB_2 amplifier is biased and driven in such a manner that during a portion of the input cycle the grid circuit draws current.
    (3) Larger tubes are required for class AB_2 operation than for class AB_1 operation.
    (4) AB_1 is used with audio amplifiers and AB_2 with r-f amplifiers.

43. A center-tapped secondary on an interstage transformer used to couple a single-ended audio stage to a push-pull output stage
    (1) is required for class B operation only.
    (2) is required for class A operation only.
    (3) is used to provide signals to the control grids of the push-pull tubes, which are 180° out of phase.
    (4) must be attached to the secondary winding at a location slightly removed from the exact center of the winding to prevent oscillation of the push-pull output stage.

44. The frequency response of a typical audio transformer
    (1) usually approximates an exponential curve.
    (2) usually is poor at low frequencies and good at all higher frequencies.
    (3) tends to drop off at low frequencies and at high frequencies.
    (4) is good at low frequencies but becomes poor as frequencies increase.

45. If an output transformer is operated with power in excess of its rated power, which of the following results is *not* likely to occur?
    (1) The amplifier may oscillate.
    (2) The transformer may overheat.
    (3) The insulation between windings may break down.
    (4) The core may saturate during portions of the signal.
    (5) Severe distortion may appear in the output.

46. The output transformer for a class B audio amplifier must
    (1) be designed to prevent core saturation with high d-c current in the primary.
    (2) have a center-tapped primary.
    (3) have impedance in the primary which matches the plate impedance of the output stage within 10 per cent.
    (4) have center-tapped primary and secondary windings.

47. Interconnecting leads in r-f circuitry should be kept as short and direct as possible
    (1) because power loss due to lead resistance is reduced.
    (2) because the chassis is less crowded and a neater appearance is achieved.
    (3) to minimize radiation and influence of stray electromagnetic and electrostatic fields.
    (4) because long leads reduce stage gain.

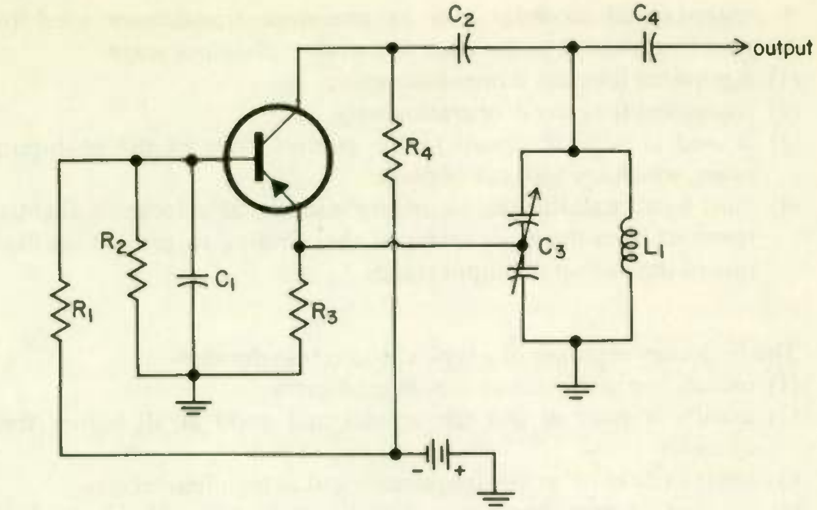

Fig. E.4

48. The circuit shown in Fig. E.4 is a transistor Colpitts oscillator. Which of the following statements about the circuit is *not* correct? (C_1 is an electrolytic capacitor.)
    (1) The function of R_1 is to provide bias for the transistor base.
    (2) A PNP transistor is used in this circuit. To convert the circuit to use a type-NPN transistor, the only change necessary is to reverse battery potential.
    (3) The operating frequency of this circuit is determined primarily by the values of C_3 and L_1.

49. When all of the lines of magnetic force generated by an inductance link the turns of a second inductance placed near it, the coefficient of coupling between the two inductances is
    (1) 0. (2) 0.5. (3) 1. (4) 10.

50. The cloud of electrons immediately surrounding the heated cathode of a vacuum tube is known as the
    (1) electron stream. (3) depletion region.
    (2) secondary emission. (4) space charge.

51. The function of C_1 in Fig. E.4 is to
    (1) determine the operating frequency of the circuit.
    (2) provide a low-impedance path so the base is effectively at ground potential at the frequency of operation.
    (3) increase stability of d-c base bias voltage.
    (4) stabilize collector voltage.

52. The opposition to the flow of current through a vacuum tube is known as
(1) grid resistance. (3) cathode resistance.
(2) plate resistance. (4) grid-cathode resistance.

53. A thermistor is a temperature-sensitive
(1) capacitor. (2) resistor. (3) inductor. (4) vacuum tube.

54. Transistor temperature stabilization is desirable to
(1) reduce collector current variations with temperature.
(2) widen frequency response.
(3) stabilize transistor power supply demands with variations in temperature.
(4) eliminate possible degenerative feedback as a result of signal-level change with temperature variations.

55. The coefficient of coupling between two coils is said to be 0.5. What per cent of the lines of magnetic force generated by the one coil link the second coil?
(1) 100 per cent (2) 50 per cent (3) 10 per cent (4) 5 per cent

56. When all of the electrons emitted by the cathode are attracted to the plate, a condition known as ________________ occurs.
(1) Cathode depletion (3) Loss of control grid control
(2) Plate saturation (4) Secondary emission

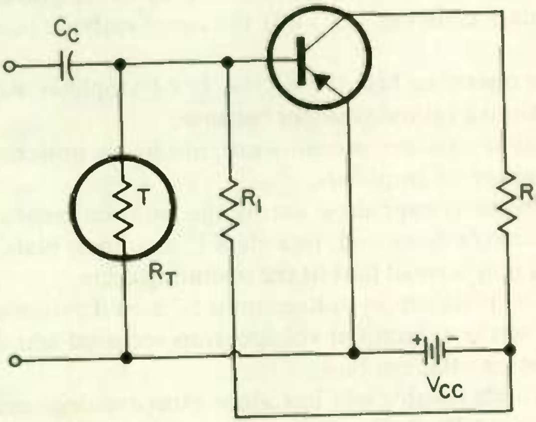

Fig. E.5

57. In the circuit shown in Fig. E.5, R_T serves to
(1) cause the base current of the transistor to increase with an increase in temperature.
(2) cause the base current of the transistor to decrease with an in-

crease in temperature.
(3) increase the power output of the circuit.
(4) maintain the base current of the transistor nearly constant for changes in temperature.

58. A negative temperature coefficient means that
(1) resistance will increase as temperature increases.
(2) resistance will decrease as temperature increases.
(3) resistance will remain constant as temperature increases.
(4) current is generated in a resistance when temperature is changed.

59. Excessive plate current in a tube may be caused by
(1) improper filament or heater voltage.
(2) a shorted screen bypass capacitor.
(3) excessive power supply ripple.
(4) loss of control grid bias.

60. An r-f choke would normally be used to
(1) couple two r-f amplifier stages.
(2) provide operating grid bias.
(3) remove r-f from a portion of a circuit while allowing audio and d-c to pass.
(4) limit plate current to a safe value.

61. Distortion in a tetrode plate current characteristics is a result of
(1) plate saturation.
(2) secondary emission.
(3) excessive screen grid current.
(4) the use of cathode bias.

62. The entire operating bias for a class C r-f amplifier stage cannot be obtained from a cathode resistor because
(1) the cathode resistor would waste too much power when used in high-power r-f amplifiers.
(2) there is no voltage drop across the cathode resistor unless tube plate current flows and, in a class C amplifier, plate current flows during only a small part of the operating cycle.
(3) excessive plate supply voltage must be used if cathode bias is used, owing to the substantial voltage drop required across the cathode resistor for sufficient bias.
(4) the cathode resistor will introduce excessive degeneration and the stage gain will be reduced.

63. The grounded-grid triode amplifier normally does not require neutralization because
(1) it is not intended for operation at radio frequencies.
(2) such a triode has very low grid-plate interelectrode capacitance.

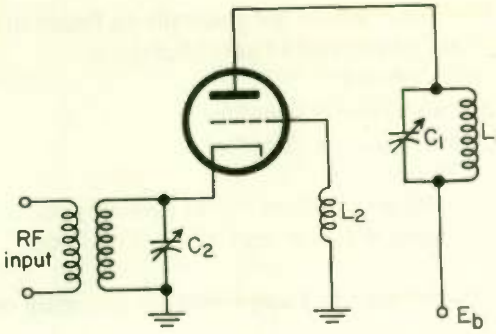

Fig. E.6

(3) its operating signal level is too low to permit self-oscillation.
(4) the grid acts as a shield between the input and output circuits.

64. In Fig. E.6 which component should be omitted from the circuit for its proper operation?
(1) L_1 (2) L_2 (3) C_1 (4) C_2

65. Why should the component selected in Question 64 be removed from the circuit of Fig. E.6?
(1) It will not allow the tank circuit to be tuned to resonance because its value will be excessive.
(2) It will cause instability of the circuit.
(3) It serves no useful purpose and only adds expense.
(4) It will excessively load the circuit driving the stage.

66. A leaky or shorted grid coupling capacitor can cause excessive plate current because it will
(1) allow excessive signal voltage to reach the tube's control grid.
(2) prevent sufficient drive signal from reaching the following tube's control grid, and loss of grid bias will result.
(3) allow the positive voltage appearing on the plate of the preceding tube to reach the control grid of the following tube. The resulting positive grid voltage of the following tube will cause the tube plate current to soar to a high value.
(4) prevent proper contact bias from taking place.

67. Higher than normal filament (or heater) voltage could be caused by
(1) corrosion of tube socket contacts.
(2) a shorted turn in the filament transformer secondary.
(3) higher than normal line voltage.
(4) a broken strand or strands in filament connecting leads.

68. A class C r-f amplifier would not generally be found in a
    (1) communications receiver i-f amplifier stage.
    (2) broadcast transmitter.
    (3) amplitude-modulated transmitter.
    (4) frequency-modulated transmitter.

69. A high-gain r-f voltage amplifier would probably use a
    (1) triode. (2) beam-power pentode. (3) diode. (4) pentode.

70. High-power unmodulated r-f amplifiers are generally operated class C because
    (1) fewer components are required.
    (2) this type of operation is more efficient.
    (3) this type of operation is least apt to cause oscillations.

71. Neutralization of an r-f amplifier stage is accomplished by
    (1) neutralizing plate current variations in the power supply feeding the amplifier stage.
    (2) neutralizing the grid-plate capacitance of the amplifier tube.
    (3) reducing the input signal applied to the amplifier.
    (4) proper tuning of the amplifier's plate tank circuit.

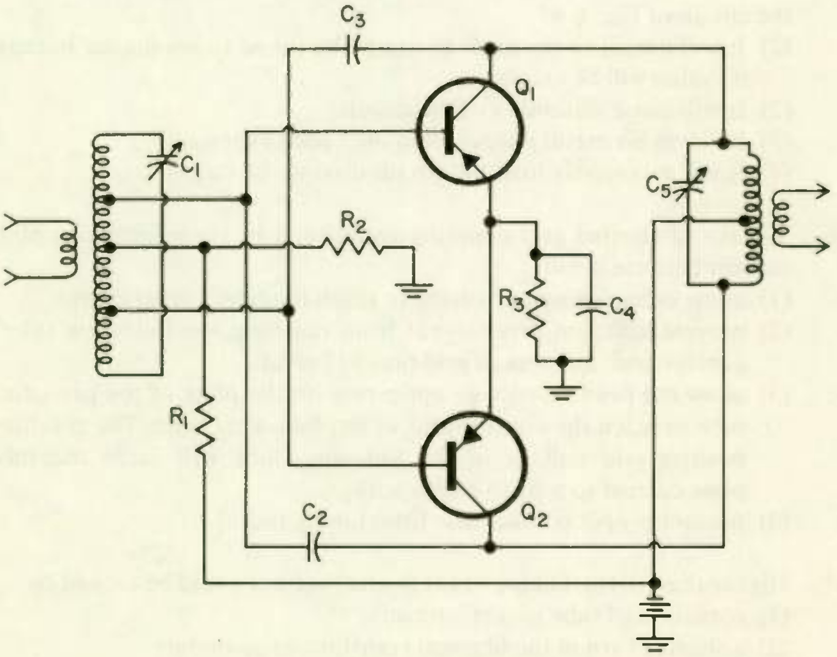

Fig. E.7

72. If the circuit of Fig. E.7 is used as a straight-through amplifier (that is, not as a frequency multiplier), C_2 and C_3 most probably function as
    (1) neutralizing capacitors.
    (2) coupling capacitors.
    (3) base-stabilizing capacitors.
    (4) collector-stabilizing capacitors.

73. In the tetrode junction transistor
    (1) the two bases are maintained at the same potential.
    (2) the first (conventional) base is forward-biased and the second base has a reverse bias applied to it.
    (3) both bases are reverse-biased with respect to the collector.
    (4) the second base increases the area of the base region through which the majority carriers flow, thus decreasing the base resistance of the transistor.

74. The major advantage(s) of the tetrode transistor is (are)
    (1) higher stability at elevated operating temperatures.
    (2) lower base resistance and capacitance.
    (3) lower operating temperature.
    (4) biasing is simpler, since both bases are operated at the same potential.

75. Biasing the base of a PNP transistor positive with respect to the emitter will
    (1) forward-bias the base-emitter junction.
    (2) cause current to flow across the base-emitter junction.
    (3) cause a large flow of majority carriers across the base-emitter junction.
    (4) reverse-bias the base-emitter junction.

76. In a class C r-f amplifier, cathode bias is often used in conjunction with grid-leak bias to
    (1) reduce the power consumption from the fixed bias supply and thus improve its regulation.
    (2) provide sufficient "standby" bias if the grid-leak bias should fail owing to loss of the amplifier's driving signal.
    (3) improve the linearity of the class C stage.
    (4) reduce the amount of power required to drive the class C stage.

77. When neutralizing an r-f amplifier stage, plate voltage should be removed
    (1) for maximum safety in making the adjustments.
    (2) to assure that any signal present in the plate tank circuit is due to

interelectrode coupling between the tube's grid and plate.
(3) to prevent the signal from reaching the antenna and causing interference.
(4) to prevent oscillation of the r-f stage.

78. For proper operation, the collector of a PNP transistor is
(1) maintained at a positive voltage with respect to the emitter.
(2) forward-biased with respect to the base.
(3) reverse-biased with respect to the base.
(4) maintained at the same potential as the emitter.

79. Identify the circuit in Fig. E.8.
(1) An a-f grounded-cathode triode amplifier with cathode resistor bias for class A operation
(2) An a-f grounded-cathode triode amplifier biased for class C operation
(3) An r-f grounded-cathode triode amplifier for class C operation
(4) An a-f cathode follower triode amplifier

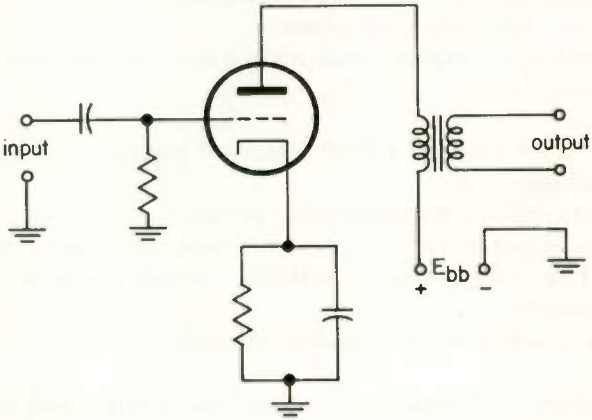

Fig. E.8

80. Neutralization of a triode r-f amplifier stage is necessary to
(1) assure maximum power output from the stage.
(2) prevent the stage from self-oscillating because of plate-to-grid feedback.
(3) prevent degeneration and loss of stage gain.
(4) minimize loading of the preceding stage.

81. All stages preceding the amplifier stage being neutralized should be properly adjusted and tuned for maximum output to
(1) avoid the necessity for readjusting them after the final stage has

been neutralized.
(2) provide a strong signal at the grid of the stage being neutralized for maximum ease of neutralization.
(3) assure that varying the neutralizing capacitor setting will not cause a shift in power output from the preceding stages.
(4) prevent off-frequency operation.

82. In a common-emitter stage an emitter resistor is often included to
(1) increase the gain of the stage.
(2) provide base-biasing voltage.
(3) provide thermal stability of the base bias.
(4) provide voltage feedback for reduced distortion of the signal being amplified.

83. The emitter resistor of a common-emitter stage is often bypassed with a capacitor to
(1) decrease distortion and increase frequency response of the stage.
(2) increase stage gain by preventing degeneration which would be caused if the emitter resistor were not bypassed.
(3) maintain the collector current at a safe value for changes in the operating temperature of the transistor.
(4) decrease the thermal noise generated in the transistor.
(5) allow a smaller value of emitter resistor to be used.

84. When a semiconductor PN junction is forward-biased
(1) it presents a low resistance to the flow of current through it.
(2) only minority charge carriers can cross the junction.
(3) a negative voltage is applied to the P-type material and a positive voltage is applied to the N-type material.
(4) the barrier region is wider than when the junction is reverse-biased.

85. The "push-pull" frequency multiplier is normally operated
(1) class A. (2) class AB_2. (3) class B. (4) class C.

86. The output of the push-pull frequency multiplier contains
(1) even-order harmonics of the input signal.
(2) odd-order harmonics of the input signal.
(3) a combination of both even- and odd-order harmonics of the input signal.
(4) only the fundamental input frequency plus its first even harmonic.

87. Identify the circuit in Fig. E.9.
(1) An a-f grounded-cathode triode amplifier with cathode resistor bias for class A operation

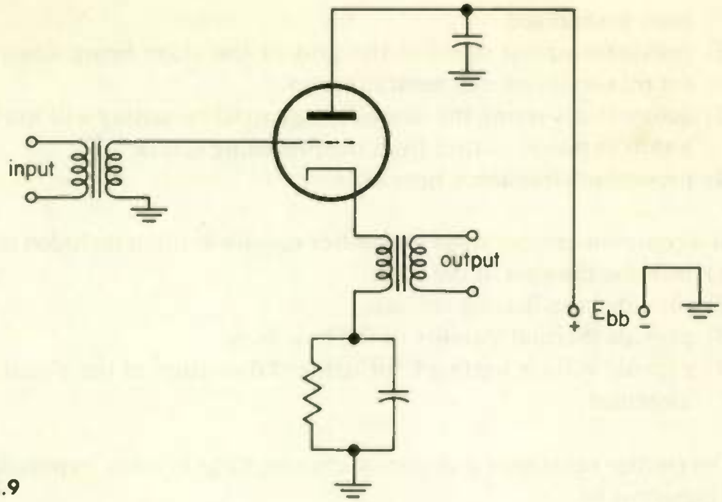

Fig. E.9

(2) An r-f grounded-cathode triode amplifier with bias for class C operation
(3) An r-f grounded-grid triode amplifier with output taken from cathode circuit
(4) An a-f cathode-follower triode amplifier

88. The collector-to-base voltage (emitter open) rating of a transistor refers to the
(1) maximum forward voltage which can be applied to a transistor's base with the emitter open.
(2) maximum voltage between collector and base of a transistor with the emitter open that can be used without danger of breakdown.
(3) minimum collector saturation voltage with emitter open.
(4) maximum forward collector current.

89. The maximum reverse voltage which can safely be applied to the base-emitter junction is denoted by the maximum
(1) forward base-emitter voltage.
(2) emitter-to-base voltage.
(3) emitter-collector voltage with the base grounded.
(4) emitter current.

90. The following signal(s) appear at the output of a "push-push" frequency-multiplier stage.
(1) The fundamental input frequency plus all of its odd harmonics
(2) The fundamental input frequency plus all of its even harmonics
(3) Only odd harmonics of the input frequency
(4) Only even harmonics of the input frequency

91. The push-push stage is different from the push-pull stage in that
(1) the control grids of the tubes used in the push-push stage are always connected in parallel.
(2) the plates of the tubes used in the push-push stage are always connected in parallel.
(3) the push-push stage always produces less distortion than the push-pull stage.
(4) the push-pull stage will not operate at as high a frequency as the push-push stage.

92. The capacitance existing between the control grid and all other tube electrodes, except the plate, is termed the
(1) input capacitance.
(2) tube capacitance.
(3) effective capacitance.
(4) cathode capacitance.

93. The maximum peak negative control grid voltage rating of a tube refers to the maximum
(1) peak pulse voltage which can be applied between the control grid and common of a vacuum tube.
(2) average control grid voltage.
(3) negative peak voltage which can be safely applied to the control grid with respect to the cathode.
(4) peak negative voltage which can be applied between the control grid and plate of a vacuum tube.

94. The circuit of Fig. E.7 is a
(1) push-push amplifier.
(2) push-pull amplifier.

95. The maximum d-c cathode current rating of a tube refers to the maximum
(1) current which can safely flow from the cathode of a tube to the plate of the tube.
(2) current which can safely pass from the cathode of a tube to all the other tube elements.
(3) current which can safely pass from the cathode of a tube to the screen grid of the tube.
(4) peak current which can safely pass from a cathode of a tube to all the other tube electrodes.

96. Identify the circuit in Fig. E. 10.
(1) An a-f grounded-cathode pentode amplifier biased for class B operation
(2) An r-f grounded-cathode pentode amplifier biased for class C operation
(3) An a-f grounded-cathode pentode amplifier for class A operation
(4) An a-f cathode-follower triode amplifier

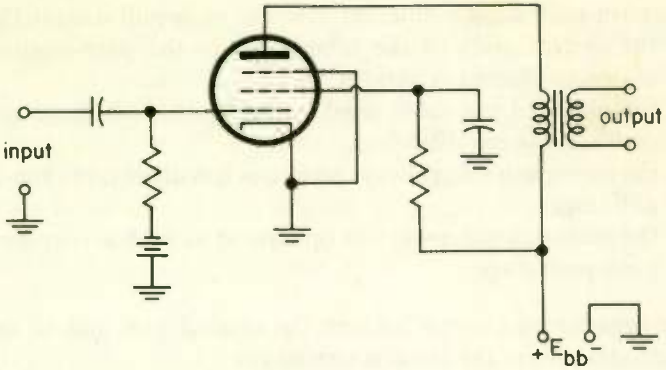

Fig. E.10

97. The collector-to-emitter voltage (base voltage = 0.5 volt) denotes the maximum
    - (1) forward voltage which can be applied to the collector-emitter junction.
    - (2) forward voltage which can be applied between the collector with the emitter grounded with respect to the base.
    - (3) collector supply voltage.
    - (4) reverse voltage which can be safely applied between the collector and emitter.

98. A certain type of microphone uses a damped, stretched diaphragm. The frequency response is approximately 75 to 5000 cps. With this type of microphone, a hiss is noticeable when the sound level is low. This type of microphone is the
    - (1) dynamic microphone.
    - (2) carbon microphone.
    - (3) ribbon microphone.
    - (4) crystal microphone.

99. Which of the following statements about hum and self-oscillations in audio amplifiers is *not* correct?
    - (1) A common cause of hum is insufficient filtering of the d-c power supply output.
    - (2) A possible cause of hum is a short-circuited choke in the audio-amplifier power supply.
    - (3) With indirectly heated cathodes it is always necessary to use a center-tapped filament transformer and ground the center tap to reduce hum to an acceptable minimum.
    - (4) Self-oscillations in an audio amplifier are usually caused by interaction between stages.
    - (5) Mechanical coupling between stages is also sometimes a cause of oscillation.
    - (6) Twisting filament leads usually helps to reduce 60-cycle hum in

audio amplifiers.

(7) Sometimes basic design errors can cause self-oscillations or hum in audio stages.

100. Headphones with an impedance of the order of 55 ohms are to be connected to the plate circuit of an audio-amplifier stage. Which of the following types of coupling would probably be most satisfactory?
(1) Transformer coupling
(2) Resistance coupling
(3) Impedance coupling
(4) Capacitive coupling

101. Which of the following types of microphones requires the use of a low-voltage d-c power supply in series with the microphone?
(1) Crystal
(2) Dynamic
(3) Carbon
(4) All the preceding types

102. The maximum peak cathode current rating of a tube refers to the maximum
(1) current which can safely flow from the cathode of a tube to the plate of the tube.
(2) current which can safely pass from the cathode of a tube to all the other tube electrodes.
(3) current which can safely pass from the cathode of a tube to the tube screen grid.
(4) peak current which can safely pass from the cathode of a tube to all the other tube electrodes.

103. A certain type of microphone makes use of the piezoelectric effect present in some types of materials. That type of microphone is the
(1) dynamic microphone.
(2) carbon microphone.
(3) ribbon microphone.
(4) crystal microphone.

104. The maximum control grid resistance denotes the maximum
(1) internal resistance between a tube's control grid and cathode which can be tolerated before the tube is unsatisfactory for further use.
(2) amount of external resistance that should exist between control grid and cathode.
(3) external resistance which should be used in series with an a-c input signal.
(4) value of grid-leak resistance for optimum results when the tube is used as a diode detector.

105. Identify the circuit in Fig. E.11.
(1) An r-f grounded-cathode triode amplifier with cathode resistor

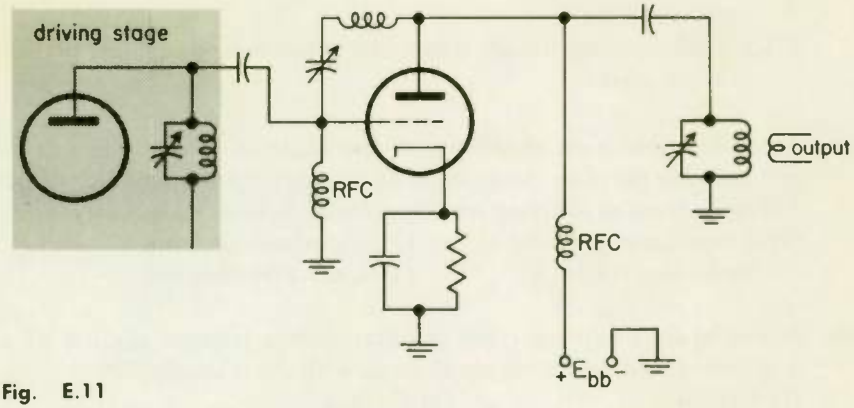

Fig. E.11

bias as for class A operation

(2) An a-f grounded-cathode pentode amplifier with battery bias for class A operation

(3) An r-f grounded-cathode triode amplifier with parallel-fed *LC* plate load for class B operation

(4) An a-f cathode-follower triode amplifier

106. Which of the following statements about an impedance-coupled audio amplifier is *not* correct?

(1) Coupling is accomplished by the inductive method.

(2) The operation of an impedance-coupled system is similar to that of a resistance-coupled system.

(3) The audio chokes used in an impedance-coupled system are physically separated from each other to minimize inductive coupling between them.

(4) A coupling capacitor is used between two audio-frequency chokes. This capacitor should have low reactance at the lowest frequency the amplifier will encounter.

107. When storing a crystal microphone, several basic precautions should be taken. Of the following, which is *not* particularly important?

(1) If the microphone is to be stored for an extensive length of time, a small current should first be passed through the crystal elements to neutralize the crystal.

(2) Store in a cool place.

(3) Store in a dry place, preferably in a moisture-proof wrapping.

(4) Avoid subjecting the microphone to physical shock or mechanical vibrations.


CLEVELAND INSTITUTE OF ELECTRONICS

CLEVELAND INSTITUTE OF ELECTRONICS / CLEVELAND, OHIO

electronics

CLEVELAND INSTITUTE OF ELECTRONICS / CLEVELAND, OHIO

YOUR PROGRESS REVIEW
....and FCC License Check
Part I

3731-1

An AUTO-PROGRAMMED™ Lesson

ABOUT THE AUTHOR

Radio, TV, and electronics technicians today know that an F.C.C. license is the key to a better job, better pay, and a better future. This guide for preparing for the F.C.C. examinations is not only a direct, well-organized guide to passing them but also a review designed to sharpen your grasp on electronics.

The author provides in this review answers to all the questions of the type usually asked in the examinations and also includes discussions of these answers. The materials and methods presented are those which proved most effective in ten years' use with over 50,000 prospective licensees.

In addition, Mr. Geiger, whom you've read about in earlier lessons, has simplified diagrams and included operating principles for each circuit to make them easier to learn; to highlight basic principles; and to help you handle variations in circuits.

Accredited by the Accrediting Commission of the National Home Study Council

The Accrediting Commission has been approved by the U.S. Office of Education as a "nationally recognized accrediting agency".

CLEVELAND INSTITUTE OF ELECTRONICS

YOUR PROGRESS REVIEW
...and FCC License Check
Part I

By DARRELL L. GEIGER
Senior Project Director
Cleveland Institute of Electronics

3731-1

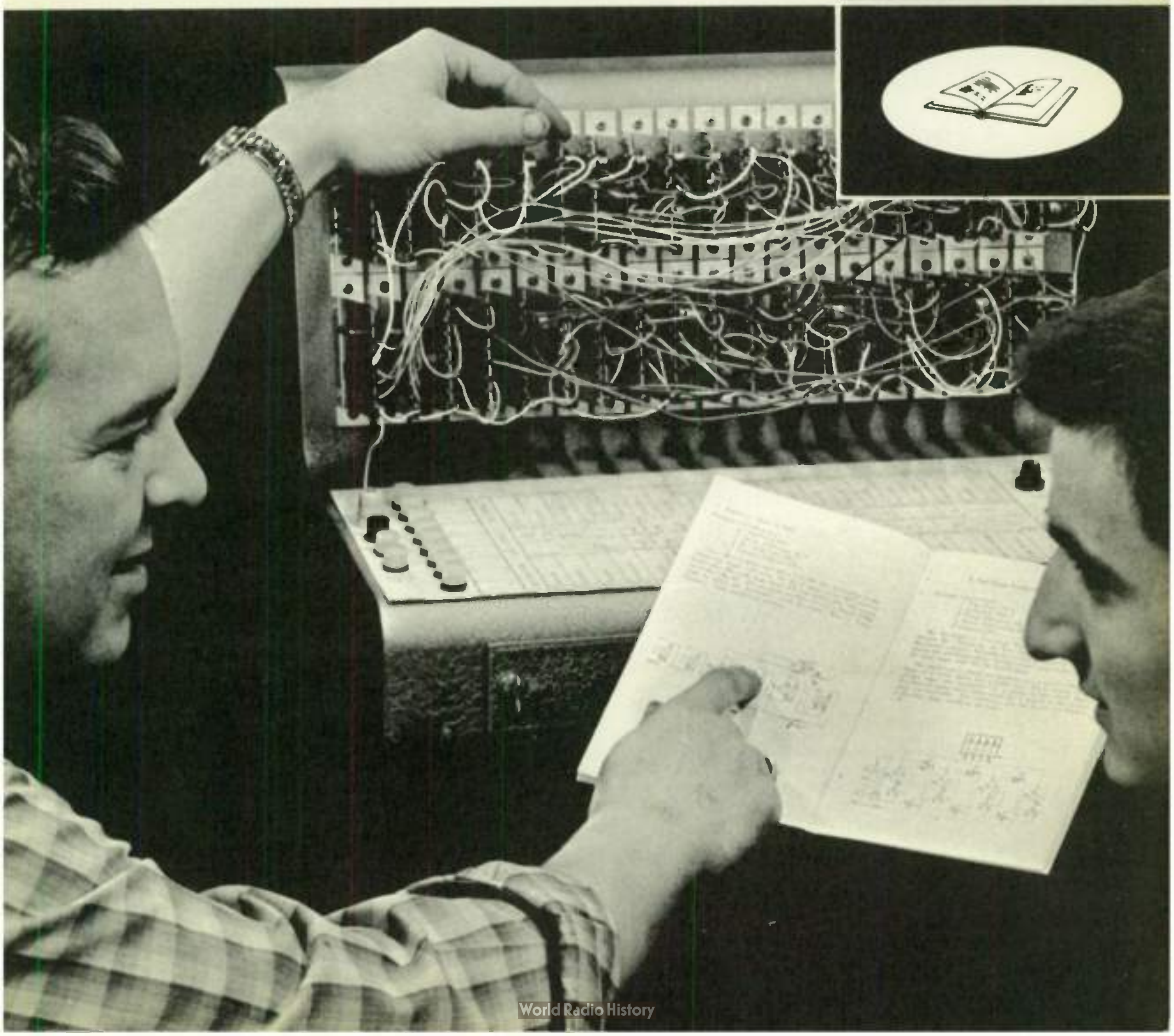

In this lesson you will learn...

Frontispiece: Tracing digital computer circuitry. Courtesy, Tech Service, Inc.

FIRST EDITION/Third Revised Printing/August 1967.

3731-1

A chat with your instructor

These questions and answers review important concepts that you must understand in order to progress fast and learn most from the lessons ahead. The answers given to the questions are by no means merely a repetition of what you have already learned in previous lessons. The discussion often takes a different viewpoint to help you get a broader and clearer understanding of the subject matter. Also, much additional information is given beyond that of previous lessons. The purpose of this review is not just to refresh your memory on what you have forgotten. It will also carry you forward to new knowledge and understanding.

Studying these questions and answers will show up areas in which you are weak. Be sure and go back to the lessons you have completed and review these subject areas. Don't let your review be confined to merely reading the questions and answers given here. Don't forget that taking plenty of time out for review is one of the best ways to save time. The better you understand the lessons already completed, the easier the following lessons will be, and the more you will learn from them.

YOUR PROGRESS REVIEW ...and FCC License Check

Part I

ELECTRICAL PRINCIPLES AND COMPONENTS

Question 3.01	*By what other expression may a "difference of potential" be described?*
Answer	"Voltage drop," "*IR* drop," "emf," "electromotive force," "voltage difference," "potential fall," and "impressed voltage" are all synonyms for "difference of potential." "Voltage drop," "*IR* drop," and "potential fall" most commonly refer to the voltage across various elements, or groups of elements, within a circuit, and usually not to the source voltage. The terms "emf," "impressed voltage," and "electromotive force" usually refer to the source of voltage, such as a generator or a battery.
Question 3.02	*By what other expression may an electric current flow be described?*
Answer	It may properly be referred to as an electron flow. The strength of an electric current flow is determined by the rate of electron flow. When electrons pass a certain point at the rate of one coulomb per second, the strength of the current flow is one ampere.
Question 3.03	*Explain the relationship between the physical structure of the atom and electric current flow.*
Answer	An atom consists of an inner nucleus around which electrons revolve in rings or shells, as shown in Fig. 3.03. The nucleus is made up of protons and neutrons. All electrons except those in the outer shell are rigidly held in their shell. If the outer shell has only a few electrons, they break out of their shell easily and wander around through the material of which the atom is a part. Such wandering electrons are called *free electrons* because they are not attached to any atom. If a voltage is applied to the material, the free electrons move away

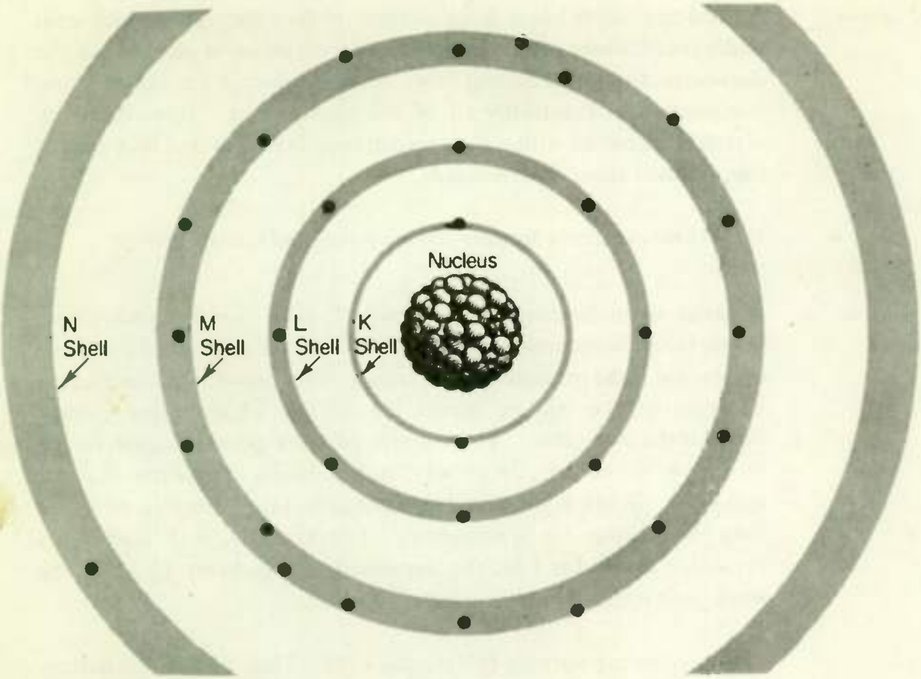

Fig. 3.03 **Structure of the copper atom. The black dots are electrons.**

from the negative terminal of the voltage source and toward the positive terminal. This is because the electrons carry a negative charge and thus move in accordance with the rule that like charges repel each other and unlike charges attract each other. This movement of free electrons in some general direction under the influence of a voltage constitutes a current flow.

If there are many electrons in the outer shell, they cannot break away from the shell except with great difficulty. Hence, a material with atoms having many electrons in their outer orbits has few free electrons, and it is therefore a poor conductor, or an insulator. The maximum number of electrons that can exist in the outer shell of an atom is eight. Materials in which the atoms have this maximum number are excellent insulators. Both copper and silver, on the other hand, have only single electrons in the outer shells of their atoms, and they are therefore excellent conductors.

Question 3.04 *With respect to electrons, what is the difference between conductors and nonconductors?*

Answer

A good conductor has a large number of free electrons, which can, under the influence of a potential, move from atom to atom along the conductor, forming a current flow. A nonconductor has but very few free electrons. Practically all of the electrons in a nonconducting material are bound within their own atomic orbits, so that they are not free to travel along the conductor.

Question
3.05

What is the difference between electric power and electric energy?

Answer

In order to understand energy, "work" must first be understood. Work is the overcoming of opposition. In an electrical circuit the opposition is the resistance of the circuit. This opposition is overcome by applying the voltage across the circuit, which forces current through the resistance. The amount of work done is equal to the product of the voltage, the current, and the length of time that the current flows. Work is measured in watthours, kilowatthours, or joules (one joule being one wattsecond). For example, if 3 amp flows through a circuit for 4 hr, the impressed voltage being 12 volts, the work done will be $3 \times 4 \times 12 = 144$ whr.

Energy is the capacity for performing work. Thus if a 12-volt battery has sufficient charge to deliver 3 amp for 4 hr, the electric energy in the battery is 144 whr. Energy is measured in the same units as work.

Power is the rate at which energy is expended; it is the rate of doing work. Power is equal to work divided by time. Thus if 144 whr of work is done in 4 hr, the power is $144 \div 4 = 36$ watts. Power can also be defined as the ability to do work. Electric power is measured in watts.

Question
3.06

A relay with a coil resistance of 500 ohms is designed to operate when 0.2 amp flows through the coil. What value of resistance must be connected in series with the coil if operation is to be from a 110-volt d-c line?

Answer

The voltage drop across the coil in normal operation will be

$$E = IR = 0.2 \times 500 = 100 \text{ volts}$$

The series voltage-dropping resistance to be added must be of such value as to drop the 110 volts of the line down to the 100 volts required for proper operation of the relay. This will be a drop of $110 - 100 = 10$ volts. The required resistance will be

$$R = \frac{E}{I} = \frac{10}{0.2} = 50 \text{ ohms}$$

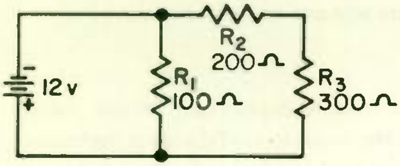

Fig. 3.07 **Pi network.**

3.07 *Draw the circuit of a 12-volt battery with three resistors (100, 200, and 300 ohms) arranged in a pi network.*

Question a *What are the total current and the current through each resistor?*

Answer a One arrangement for the circuit is shown in Fig. 3.07. Note that the three resistors are connected in the form of the Greek letter π, from which the network gets its name. Since the 12-volt battery is connected directly across R_1, the current through R_1 is, by Ohm's Law,

$$I_1 = \frac{E}{R_1} = \frac{12}{100} = 120 \text{ ma}$$

The 12 volts is also across R_2 and R_3 in series. Since R_2 and R_3 have a combined resistance of $200 + 300 = 500$ ohms, the current I_2 through R_2 and R_3 is $12 \div 500 = 24$ ma. The total current from the battery is the sum of the current taken by the two parallel branches, which is $120 + 24 = 144$ ma.

In summary, the current through R_1 is 120 ma; through R_2, 24 ma; and through R_3, 24 ma. The total current is 144 ma.

Question b *What is the voltage across each resistor?*

Answer b The voltage across R_1 is 12 volts; across R_2, 4.8 volts; and across R_3, 7.2 volts. Since R_1 is connected directly across the battery, its voltage must be the same as the battery voltage. The current through R_2 was found to be 24 ma. By Ohm's law, $E_2 = I_2 \times R_2 = 0.024 \times 200 = 4.8$ volts. Find the voltage across R_3 in the same manner. If your values are correct, the sum of E_2 and E_3 must equal the battery voltage.

Question c *What power is dissipated in each resistor, and what is the total power dissipated by the circuit?*

Answer c The power in R_1 is 1.44 watts; in R_2, 0.1152 watt; and in R_3, 0.1728 watt. You can use the formula $P = E \times I$ in each case. For example, the power in R_2 is $0.024 \times 4.8 = 0.1152$ watt.

Question 3.08

What is the relationship between wire size and resistance of the wire?

Answer

The resistance of a wire varies in inverse proportion to the cross-sectional area of the wire. Thus, if the cross-sectional area is increased ten times, the resistance will be decreased to one-tenth of its previous value.

Since the area of a circle is proportional to the square of its diameter, the resistance of a conductor will be inversely proportional to the square of its diameter. That is, if one conductor is 3 times the diameter of another conductor of the same material, the resistance of the larger conductor per unit length will be one-ninth ($3^2 = 9$) of the resistance of the smaller conductor. In answering a question referring to the variation of resistance with wire size, check the question carefully to see whether cross-sectional area or diameter is being referred to.

Wire size is also commonly stated by giving the AWG (American wire gauge) size number. The larger the AWG number, the smaller the wire. A wire with a three sizes larger number than a given wire will have exactly one-half the cross-sectional area and therefore twice the resistance. Thus a No. 16 wire has twice the cross-sectional area and half the resistance of a No. 19 wire.

Length must also be considered in respect to wire resistance. Resistance is proportional to length. If one piece of wire is 3 times as long as another piece of the same wire, the resistance of the longer piece is 3 times that of the shorter.

Question 3.09

What is the meaning of "skin effect" in conductors of radio-frequency energy?

Answer

"Skin effect" refers to the tendency of r-f currents to travel near the surface of the conductor. This increases the effective resistance of the conductor because the center of the conductor is little used for carrying current, making the useful cross-sectional area of the wire much less than the entire cross-sectional area of the wire. Decreasing the cross-sectional area of a conductor increases its resistance. Skin effect exists because more magnetic lines of force cut the center of the conductor than cut the outer sections. Thus the self-inductance of the conductor is greatest at the center and decreases toward the outer edge. More counter emf is developed at the center of the conductor, and therefore the least amount of current exists at the center. The higher the frequency, the more pronounced is the skin effect.

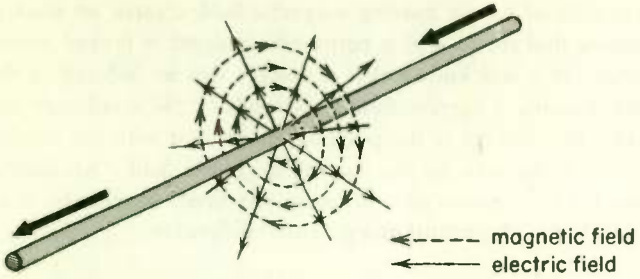

Fig. 3.10 **The electromagnetic field around a conductor carrying a current is made up of an electric and a magnetic field.**

Question 3.10 *Compare some properties of electrostatic and electromagnetic fields.*

Answer There are two types of fields, *electric* and *magnetic*. When the two types exist together, one being formed by the other, the combination is known as an *electromagnetic* field.

An electric field exists between electric charges—the electric field is the force that causes oppositely charged bodies to attract each other and like-charged bodies to repel each other. A magnetic field is one associated with magnetism. It is the force of the magnetic field that causes magnetized bodies to be attracted or repelled, like magnetic poles repelling each other and unlike poles attracting each other.

More often than not, electric and magnetic fields exist together. That is because a moving or changing magnetic field will produce an electric field and a moving or changing electric field will produce a magnetic field. A permanent magnet setting on the shelf has only a magnetic field because the field is not moving. There is only an electric field between two static charges, such as between the plates of a charged capacitor with the charging voltage removed, because the field is not changing or moving. An unchanging electric field like this is called an *electrostatic* field.

We shall now consider the field around a wire carrying an electric current. The current is made up of moving electric charges (electrons). Each electron projects an electric field into the space around the wire. This electric field moves with the moving electrons and thus produces a magnetic field which surrounds the wire in concentric circles. Hence, the field around a wire carrying a current is an electromagnetic field, since it consists of both an electric and a magnetic field as shown in Fig. 3.10.

As an example of how a moving magnetic field creates an electric field, suppose that the field of a permanent magnet is moved across a conductor. It is well known that a voltage will be induced in the conductor, causing a current flow if the ends of the conductor are connected. The voltage is the potential associated with the electric field induced in the wire by the moving magnetic field. An electric field exists between points of a different potential; conversely, if an electric field exists, there must be a potential difference.

The paths of both electric and magnetic fields can be controlled by shielding. The only suitable shield for an unvarying magnetic field is a magnetic material, such as iron. The magnetic lines of force confine themselves mostly to the iron because iron is a much better carrier of magnetic lines of force than nonmagnetic material is. Varying magnetic fields, such as those associated with r-f, can be confined by enclosing the field source in a can made of some good conductor, such as aluminum. The varying magnetic field induces electric fields and therefore electric currents in the can, and these induced currents in turn produce magnetic fields of their own which oppose the original magnetic field, thus canceling it out. Hence, the original magnetic field does not pass through the can.

The same cans used for magnetic shielding can also be used for electric shielding by grounding the can. Since ground is at a different potential than the source of the electric fields to be shielded, the electric fields terminate on the can. The screen grid in a vacuum tube is an example of a shield of this type. The screen grid is at ground r-f potential. The electric field from the plate then terminates on the screen grid rather than on the control grid, and thus electric field isolation is provided between plate and control grid.

Both electric and magnetic fields store energy. The energy stored in a capacitor is stored in the electric field between the plates, and the energy stored in an inductor is stored in the magnetic field associated with the inductor.

Magnetic and electric fields convey energy from one point to another. It is through magnetic fields that the primary of a transformer transfers energy to the secondary. It is by means of the electric fields between the plates that energy is conveyed through a capacitor. Energy is conveyed to far-distant points by means of electromagnetic fields (radio waves) traveling through space at the speed of light.

Question 3.11 *Which factors determine the amplitude of the emf induced in a conductor which is cutting magnetic lines of force?*

Answer The amplitude of the induced emf depends upon the rate at which lines of force are cut by the moving conductor. This in turn depends upon the flux density of the magnetic field cut by the conductor, the length of the conductor, the speed of the conductor, and the angle at which the conductor cuts across the field.

Question 3.12 *Define the term "residual magnetism."*

Answer "Residual magnetism" is the magnetism remaining in a body after the removal of the magnetizing force. An example of residual magnetism is the magnetism often noticed in a screwdriver after it has once been near a magnetizing force. A more useful example is the magnetism that remains in the field coils of a d-c generator after the generator is shut down. If it were not for this residual magnetism, the generator voltage would not build up again when the armature was once more put in motion.

Question 3.13 *In what way does an inductance affect the voltage-current phase relationship of a circuit? Why is the phase of a circuit important?*

Answer Inductance causes the current to lag the voltage. In a circuit with inductance and no resistance the current will lag the applied voltage by 90°. If there is resistance in the circuit as well as inductance (the two being in series), the angle of lag will be less than 90°. If the resistance is equal to the inductive reactance, the current will lag the voltage by 45°. If the inductive reactance is greater than the resistance, the angle of lag will be between 45 and 90°. If the resistance is greater than the reactance, the angle of lag will be less than 45°. If there is only resistance (no reactance), the current and voltage will be in phase.

If a circuit has capacitive reactance (rather than inductive reactance) in series with resistance, the angle between the current and voltage will be the same as described above for inductive reactance, except that the current will now lead the voltage rather than lag.

The proper operation of many circuits requires maintaining correct phase relationships. Whether an amplifier with feedback becomes an oscillator or an inverse-feedback amplifier depends upon the phase of the feedback signal. If some signal frequencies have more phase shift than others, the time relationship between the different frequencies that make up the signal will be changed, which will change the shape of the wave. For example, a square wave will no longer be a square wave if some components of the wave are subject to more phase shift than others. The proper timing of timing circuits requires the correct phase shift, since a phase shift represents a time delay.

When two signals come together, whether they reinforce each other to form a stronger signal, or buck each other to give a weaker signal depends upon the phase relationship between the two signals. If in phase, they add for a stronger signal; and if 180° out of phase, they subtract for a weaker signal. Phase-shifting networks are often designed into electronic equipment in order to shift the phase of one signal to the desired relationship with that of another.

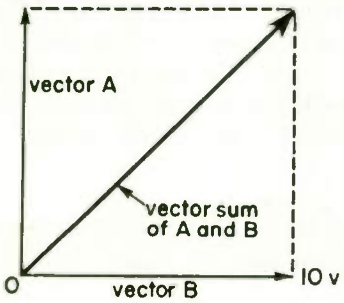

Fig. 3.14 **Finding the sum of two voltages 90° out of phase.**

Question 3.14 *Explain how to determine the sum of two equal vector quantities that have the same reference point but directions that are 90° apart, 0° apart, and 180° apart. How does this pertain to electric currents or voltages?*

Answer The meaning of vectors (more properly called *phasors*) and how they are used to represent currents and voltages is discussed in the appendix to this lesson. Two equal vectors *A* and *B* whose directions are 90° apart are shown in Fig. 3.14. Vectors *A* and *B* represent two 10-volt a-c signals separated in phase by 90°. The vector sum is the hypotenuse of a triangle which is 10 volts on each side. Remembering that the hypotenuse of a triangle is equal to the square root of the sum of the squares of the sides, the vector sum is equal to $\sqrt{10^2 + 10^2} = \sqrt{200} = 14.14$ volts.

Two vectors 0° apart represent two voltages or currents in phase. The sum is then the simple arithmetical sum of the vector amplitudes. Thus the sum of two 10-volt vectors 0° apart is 20 volts. Two vectors 180° apart directly oppose each other, so that their sum is the arithmetical difference between the two vector values. Thus the sum of two 10-volt vectors 180° apart is $10 - 10 = 0$.

Question 3.15 *Explain the theory of molecular alignment as it affects magnetic properties of materials.*

Answer You have learned that, when current flows through a coil of wire, a magnetic field is produced with a north pole at one end of the coil and a south pole at the other end. Since the current is made up of electrons, this magnet is formed by electrons moving in circles. Inside the atoms electrons also move in circles, revolving in their orbits around the nucleus. Each revolving electron forms a tiny magnet. This is one reason why all materials are made up of a huge number of tiny magnets.

If you take several bar magnets free to turn and place them close to each other, they will all align to form one larger magnet, opposite poles being pulled together. This does not happen with the tiny magnets of most materials because the collisions and temperature vibrations continually going on within the atomic structure keep the tiny magnets in perpetual agitation so alignment is impossible. The magnetic property of most materials, because of this, is either zero or very slight.

However, in a few elements, particularly iron, and a variety of alloys a special form of interaction occurs between adjacent atoms, coupling the tiny magnets together in alignment. These materials are called magnetic materials. The coupling between atoms is strong enough in some magnetic materials that the atoms, after they once align, will stay aligned without the need of any external magnetizing force. These materials are used for permanent magnets. If an external magnetic force, such as a coil carrying a current, is required to keep the tiny magnets in alignment, the material is suitable for temporary magnets.

If magnetic material is placed within a coil, the lines of force increase very rapidly at first as the current is increased. However, if the current continues to be increased, a point is reached beyond which a further increase in current does not appreciably increase the number of lines of force. The iron or other magnetic material is then said to be *saturated*. Saturation occurs when the applied magnetizing force is great enough that practically all the tiny magnets within the material have become aligned, so that the magnet has nearly reached its maximum strength.

Question 3.16 *What is the relationship between the inductance of a coil and the number of turns of wire in the coil; between the inductance and the permeability of the core material used?*

Answer

The inductance of a coil varies approximately as the square of the number of turns. For example, if the number of turns is tripled, the inductance will increase by 3^2, or 9 times its original value. This statement assumes that the turns of the coil are close enough together that most of the lines of force that thread any one turn also thread all the rest of the turns. If the turns are widely separated, the change of inductance with a change in the number of turns will be considerably less than that predicted by the rule given earlier in this answer.

The inductance of a coil is proportional to the permeability of its core material. Thus, using iron in place of air as the core of a coil will greatly increase the coil inductance.

Question 3.17

What factors influence the direction of magnetic lines of force produced by an electromagnet?

Answer

The direction of the magnetic lines of force is determined by the direction of the current through the winding. Hold the electromagnet by the left hand so that the fingers point in the direction of electron flow through the winding. The thumb will then point toward the north pole of the coil. The direction of the lines of force is from the north pole to the south pole externally to the magnet.

Reversing the polarity of the voltage applied to the winding reverses the polarity of the magnet and hence also reverses the direction of the lines of force.

Question 3.18

Explain how self- and mutual inductance produce transformer action.

Answer

The continually varying current from the a-c voltage source in Fig. 3.18A causes a continually varying magnetic flux to be set up through and around transformer primary *P*. Part of this flux threads the nearby secondary coil *S*. Whenever the number of lines of force threading a coil varies, a voltage is induced in that coil. Hence, a voltage is induced in the secondary in Fig. 3.18A.

The process of producing a voltage by varying lines of force is called *induction*. If the varying lines of force that induce the voltage in one coil come from another coil, the voltage is said to be induced by *mutual induction*. The voltage is induced in the transformer secondary in Fig. 3.18A by mutual induction, because the voltage is induced in *S*, whereas *P* is the source of the lines of force.

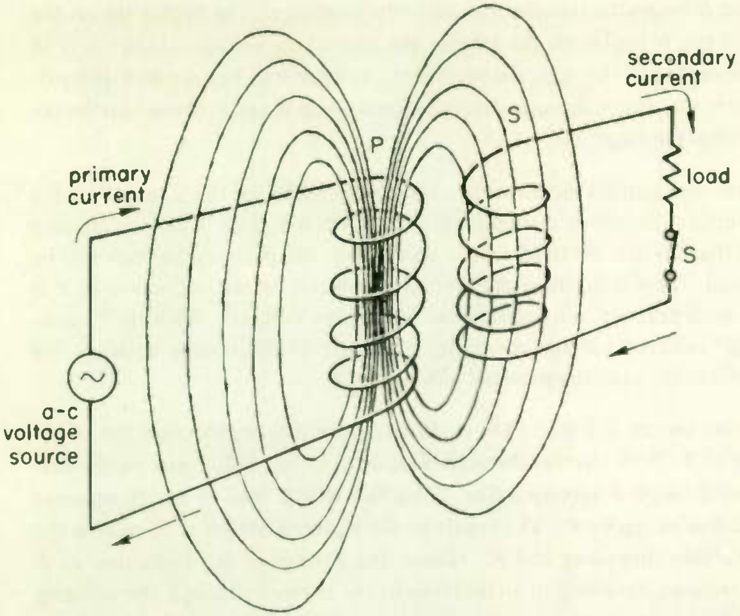

Fig. 3.18A Transformer action: The varying current through P causes a varying flux through X, which induces a voltage in S.

Since the flux threading coil *P*, as well as the flux threading coil *S*, is also varying, a voltage is also induced in the turns of coil *P*, of Fig. 3.18A. This voltage is said to be produced by *self-induction*. In Fig. 3.18B the principle of self-induction is used to form a transformer with only a single coil. Such a transformer is called an *autotransformer*. The self-induced voltage in the turns between points *A*

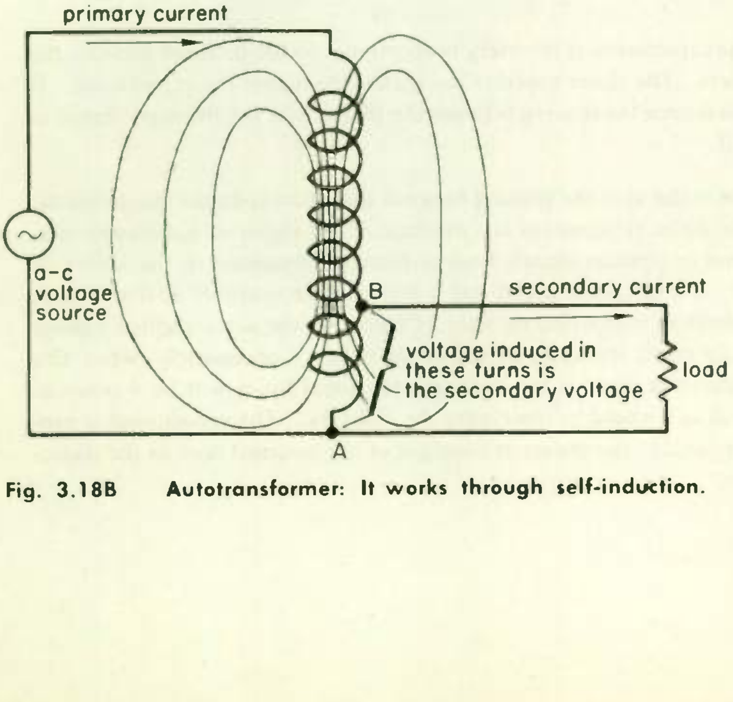

Fig. 3.18B Autotransformer: It works through self-induction.

and *B* forms the transformer secondary voltage. The higher up on the coil tap *B* is placed, the greater the secondary voltage. If tap *B* is in the center of the coil, the secondary voltage will be one-half the primary voltage; if three-quarters of the way up the coil, three-fourths the primary voltage; etc.

Self- and mutual induction are also responsible for the strength of the primary current in a transformer. If switch *S*, Fig. 3.18A, is opened so that there is no load on the secondary, the primary current will be small. This is because the voltage produced by self-induction in *P* is of such polarity as to oppose the a-c source voltage. With the "bucking" induced voltage canceling out most of the source voltage, the current through the primary will be small.

When switch *S*, Fig. 3.18A, is closed, current flows through the winding of *S*. Now current through *S* tends to set up a flux just as the current through *P* sets up a flux. The flux that *S* tries to set up opposes the flux set up by *P*. The result of the bucking action is to reduce the total flux threading coil *P*. Hence, the voltage of self-induction in *P* is reduced, resulting in an increase in the current through the winding of *P*.

Question 3.19 *How does the capacitance of a capacitor vary with the area of the plates, the spacing between the plates, and the dielectric material between the plates?*

Answer The capacitance is proportional to the area of the plates. For example, if you double the plate area (which you might do by using twice as many plates or by using larger plates), the capacitance will be doubled.

The capacitance is inversely proportional to the distance between the plates. The closer together the plates, the higher the capacitance. If you double the spacing between the plates, you cut the capacitance in half.

The material in the spacing between the plates is called the dielectric. The dielectric constant is a measure of the ability of a dielectric material to conduct electric lines of force as compared to the ability of air. If a certain material has a dielectric constant of 4, it will have 4 times as many electric lines of force for the same applied voltage as an equal thickness of air would have. Consequently, when this material is used for the dielectric, the capacitance will be 4 times as great as it would be if air were the dielectric. The capacitance is proportional to the dielectric constant of the material used as the dielectric.

Question 3.20 *Assuming the voltage on a capacitor is at or below the maximum allowable value, does the value of the capacitor have any relationship to the amount of charge it can store? What relationship does this storage of charges have to the total capacitance of two or more capacitors in series; in parallel?*

Answer The quantity of electricity Q, or charge, stored in a capacitor is equal to the capacitance C multiplied by the voltage E across the capacitor. In equation form,

$$Q = C \times E$$

This formula shows that, for a given voltage, the charge stored is proportional to the capacitance. Since the applied voltage should not be greater than the voltage rating of the capacitor, the maximum charge that can be stored can be increased only by using a larger capacitor or by using a capacitor with a higher voltage rating.

When two identical capacitors are connected in series, the total capacitance is cut in half, but the voltage rating is doubled. The maximum charge that can be stored is thus the same as it would be for one of the capacitors used alone. When two identical capacitors are connected in parallel, the total capacitance is doubled and the voltage rating is not changed. Hence, the maximum charge that can be stored is twice that of a single capacitor.

For a given applied voltage, connecting two identical capacitors in parallel doubles the stored charge, and connecting the two capacitors in series halves the stored charge. You can see from this discussion that the only time when it is useful to connect capacitors in series is when you want to use them across a higher voltage than they are rated for.

Question 3.21 *How should electrolytic capacitors be connected in a circuit in relation to polarity? Which type of low-leakage capacitor is used most often in transmitters?*

Answer Electrolytic capacitors can be used only in d-c circuits. The positive lead of the capacitor must always be connected to the positive side of the circuit voltage. Electrolytic capacitors will be destroyed if installed with polarity reversed.

Since electrolytic capacitors have a relatively high leakage, reference to a low-leakage type of capacitor implies a nonelectrolytic capacitor.

Mica-dielectric capacitors have a very low leakage, and they are the most common low-leakage capacitors in transmitters. The high breakdown voltage that is characteristic of mica makes the material particularly suitable as a dielectric for capacitors where high voltages are used, as in transmitters.

Mica is probably the best capacitor dielectric available when all properties are considered. The combination of excellence in stability, dielectric strength, Q, dielectric constant, longevity and reliability, chemical inertness, ruggedness and resistance to puncture, and moisture resistance is not duplicated by any other material.

Question 3.22 *A certain power company charges 7 cents per kwhr. How much would it cost to operate three 120-volt bulbs, connected in parallel and each having an internal resistance of 100 ohms, for 24 hr?*

Answer The power used by the three bulbs must first be found, and then the work done in using that much power for 24 hr must be calculated. For the power used by one bulb

$$P = \frac{E^2}{R} = \frac{120^2}{100} = 144 \text{ watts}$$

Since each bulb uses 144 watts, the three bulbs together use 3 × 144 = 432 watts. Remembering that work is equal to power multiplied by time, the work, in watthours, done by the three bulbs is 24 × 432 = 10,368 whr, or 10.368 kwhr. At 7 cents per kwhr, the cost of operating the bulbs for 24 hr is 7 × 10.368 = 72.6 cents.

Question 3.23 *Name four materials that make good insulators at low frequencies but not at uhf or above.*

Answer Many materials make suitable insulators at audio and low r-f frequencies but have excessive losses at high r-f frequencies. Examples are porcelain, glass, Bakelite, hard rubber, fiber, Micarta, and many types of ceramics.

The best insulators for uhf use are those with both low dielectric loss at uhf and a low dielectric constant, such as Teflon and polystyrene.

Question 3.24 *In an iron-core transformer what is the relationship between the transformer turns ratio and primary to secondary current ratio? Between turns ratio and primary to secondary voltage ratio? (Assume no losses.)*

Answer The secondary to primary voltage ratio is equal to the secondary to primary turns ratio. That is, if the secondary has 5 times as many turns as the primary, the secondary voltage will be 5 times the primary voltage. If the secondary has one-fourth as many turns as the primary, the secondary voltage will be one-fourth the primary voltage.

If a transformer steps up the voltage, it steps down the current. Thus, if the secondary has 5 times as many turns as the primary, the secondary current will be one-fifth the primary current; if the secondary has one-fourth as many turns as the primary, the secondary current will be 4 times the primary current.

Question 3.25 *What prevents high currents from flowing in the primary of an unloaded transformer?*

Answer The inductance of the winding. The primary of an unloaded transformer has a high inductive reactance, and so it draws little current from the line. When a load is placed on the secondary, the primary current increases. This is because mutual induction caused by secondary current flow acts to reduce the effective primary inductance, allowing more primary current to flow.

Question 3.26 *How is power lost in an iron-core transformer? In an air-core transformer?*

Answer Losses in an iron-core transformer can be divided into (1) copper losses and (2) iron losses. The copper loss is that caused by the ohmic resistance of the winding. The usual power formula, $P = I^2R$, applies. If the resistance of the primary winding is 4 ohms and the primary current is 3 amp, then the copper loss in the primary is $P = 3^2 \times 4 = 36$ watts. The copper loss in the secondary is figured the same way. The total copper loss is equal to the sum of the primary and the secondary copper losses.

Iron losses are made up of (1) hysteresis and (2) eddy-current losses. The alternating current used with a transformer requires a regular reversal of the tiny magnets within the molecular structure of the iron in accordance with the continually reversing polarity of the alternating current. The molecular "friction" against which the molecular magnets must reverse generate heat, which is a power loss. The power loss caused by this molecular movement is called *hysteresis* loss.

Alternating current flowing in the windings of a transformer induces electric currents, called *eddy currents*, in the iron core. These currents heat the core, and they therefore represent a loss of energy. Transformer iron cores are always made up of thin laminations, insulated from each other, in order to break up the eddy-current paths and thus reduce eddy-current losses. All transformer losses, both copper and iron, appear as heat.

Air-core transformers are generally used only at radio frequencies. Iron losses are avoided, but the use of an air core and the higher operating frequencies involved introduce new losses. Copper losses increase because of skin effect at radio frequencies. With no iron core, the lines of force are not confined to a specific path but are spread out in all directions, inducing currents in shielding cans and other nearby metal parts. All these induced currents represent power losses.

Question 3.27 *Explain the operation of a break-contact relay; of a make-contact relay.*

Answer A break-contact relay is one in which the contacts are closed when the relay coil is not energized. It is also called a "normally closed" relay; see Fig. 3.27(a). When swtich K_1 is closed, current flows through the coil, magnetizing the iron core within the winding. The magnetized core pulls down the iron armature B, breaking the contact between points A and B. When K_1 is opened, the iron core is demagnetized, allowing armature B to spring back up to again make electrical contact with A.

A make-contact relay is one in which the contacts are open when the relay coil is not energized. It is also called a "normally open" relay; see Fig. 3.27(b). When switch K_2 is closed, iron armature B is pulled down so that it makes electrical contact with point A. When switch K_2 is opened, iron contact B springs up so that electrical contact between A and B is broken.

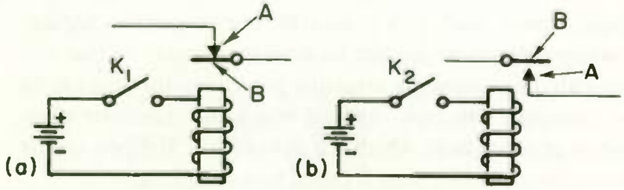

Fig. 3.27 **Make and break-contact relays.**
(a) Break-contact, or normally closed, relay.
(b) Make-contact, or normally open, relay.

Question
3.28

What are the value and tolerance of a resistor which is color-coded (left-to-right) red, black, orange, gold?

Answer

Resistors are identified by the use of four colored bands according to the code in the accompanying table. The first band is the one nearest an end of the resistor. The first two bands give the first two figures of the resistance value, and the third band gives a number by which the first two figures must be multiplied to give the resistance. The fourth band indicates the tolerance of the resistor. If the tolerance is 20 per cent, the fourth band will not be visible, since the code for 20 per cent is no color at all.

The resistor in the question has a resistance of 20 × 10^3 ohms, or 20,000 ohms, at a tolerance of 5 per cent.

Color	**First band**	**Second band**	**Third band**	**Fourth band**
None	. . .	. . .	. . .	20%
Silver	. . .	. . .	× 10^{-2}	10%
Gold	. . .	. . .	× 10^{-1}	5%
Black	. . .	0	× 1	
Brown	1	1	× 10	
Red	2	2	× 10^2	
Orange	3	3	× 10^3	
Yellow	4	4	× 10^4	
Green	5	5	× 10^5	
Blue	6	6	× 10^6	
Violet	7	7	× 10^7	
Gray	8	8	× 10^8	
White	9	9	× 10^9	

Question
3.29

What would be the value, tolerance, and voltage rating of an EIA capacitor whose first-row colors are (from left to right) white, red, green *and whose second-row colors are* green, silver, red?

Answer

The significance of each of the color dots is shown in Fig. 3.29. The white upper-left dot indicates that the capacitor is color-coded in accordance with the EIA (Electronic Industries Association) system. If this dot is some color other than white, the capacitor is not color-coded in accordance with the EIA system. Since the second and third dots in the top row are red and green the two significant figures of the capacitance value are 25. The bottom right dot (the multiplier) is red, which shows that the significant figures are to be multiplied by 100. 25 × 100 = 2500 pf the capacitance of this capacitor.

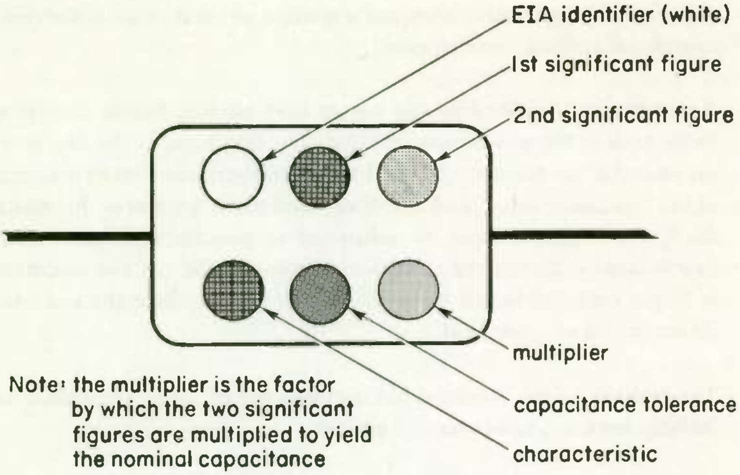

Color	Characteristic	Capacitance First and second significant figures	Multiplier	Capacitance tolerance, per cent
Black		0	1	±20
Brown	B	1	10	±1
Red	C	2	100	±2
Orange	D	3	1,000	
Yellow	E	4	10,000	
Green	F	5		±5
Blue		6		
Purple		7		
Gray		8		
White		9		
Gold			0.1	±1/2
Silver			0.01	±10

Fig. 3.29 EIA color code for mica capacitor. Capacitance values are in picofarads.

The silver center dot of the bottom row shows that the capacitance tolerance is 10 per cent. The capacitor characteristic (bottom-left dot) indicates how capacitance is affected by temperature changes. The characteristic is indicated by letters *B* to *F* in accordance with the chart of Fig. 3.29. The farther along in the alphabet the characteristic letter is, the less the capacitance changes with temperature. In this example the characteristic dot is green, which indicates *F* characteristic. Hence, temperature changes affect the capacitance of this capacitor very little.

In the EIA six-dot color-coding system voltage rating is indicated by stamping the full voltage, followed by the letters V or WV, in a suitable location on the body of the capacitor. If no voltage is stamped on the EIA six-dot capacitor, the capacitor rating is 500 volts.

Some EIA capacitors have an additional two or three dots on the reverse side in addition to the six on the front. When that is the case, voltage is indicated by the left dot on the reverse side. Brown indicates a d-c working voltage of 100 volts; orange, 300 volts; green, 500 volts; and gold, 1000 volts. The second dot on the back indicates the operating-temperature range. If red, the capacitor can be used at temperatures up to 85°C; if yellow, up to 125°C. The third dot on the back, if there is one, will be white, and it merely indicates that the capacitor is EIA color-coded, which has already been indicated by the upper-left white dot on the front of the capacitor.

Question 3.30 *List four precautions which should be taken in soldering electrical connections to assure a permanent junction.*

Answer 1. The surfaces to be soldered must be clean and bright.

2. The connections should be made mechanically secure before soldering. The solder should not provide the only mechanical strength; it should merely reinforce a connection that is already mechanically strong.

3. The surfaces to be joined must be heated until they are hot enough to melt the solder. A soldering gun or iron should be used to heat the surfaces, and the surfaces themselves should then melt the solder. If the surfaces are not hot enough, the result is a "cold" solder joint, which is electrically unreliable and lacks mechanical strength.

4. For electronic circuits only rosin should be used as the soldering flux. Acid-core solders, widely used by electricians, should never be used in electronic circuits.

YOUR PROGRESS REVIEW, PART I

EXAMINATION

Circle the number of the correct answer for each question that follows. When you are finished, transfer the answers to the answer sheet by putting X's in the proper squares. When the graded answer sheet is returned to you, correct in this book any questions you may have missed. By doing so, you will have a record of the correct answers to all questions for review purposes.

1. What is the resistance of a resistor color-coded, from left to right, *yellow, white, black?*
   (1) 40 ohms
   [✓ (2) 49 ohms]
   (3) 490 ohms
   (4) 491 ohms
   (5) 4910 ohms

2. What is the tolerance of the resistor in Question 1?
   (1) 1 per cent
   (2) 5 per cent
   (3) 10 per cent
   [✓ (4) 20 per cent]
   (5) Not given

3. You could change the direction of the lines of force from an electromagnet by
   (1) reversing the iron core.
   (2) hitting the iron core with a hammer to demagnetize it and then remagnetizing with opposite polarity.
   [✓ (3) changing the direction of current through the coil.]
   (4) increasing the coil current to the point where core saturation occurs.

4. If a transformer has 100 turns on the primary and 400 turns on the secondary, how much current will the primary draw if the secondary load draws 8 amp?
   (1) 2 amp
   (2) 4 amp
   (3) 8 amp
   (4) 16 amp
   [✓ (5) 32 amp]

5. If the secondary winding of a transformer supplying 4 amp to a load were to become open, the primary current would
   ?
   (1) not change.
   (2) decrease.
   (3) increase some.
   (4) greatly increase, overheating the transformer.

6. The iron core of transformers is made up of thin insulated laminations in order to

(1) reduce interference.
? (2) reduce power loss in the windings.
(3) reduce hysteresis losses.
(4) reduce eddy-current losses.
(5) reduce both hysteresis and eddy-current losses.

7. Air-core transformers are generally used
(1) with forced-air cooling in large transformers as in broadcast transmitters.
(2) where eddy-current and hysteresis losses must be avoided.
(3) at radio frequencies.
(4) where weight must be kept down.

8. Saturation in a magnetic material results from
(1) nearly all the tiny magnets within the material becoming aligned.
(2) increased agitation within the molecular structure breaking alignment bonds as fast as new ones are formed.
(3) impurities within the material.
(4) reversal of the molecular alignment.

9. Which of the following has nothing to do with the amplitude of the voltage induced into a wire moving through a magnetic field?
(1) The size of the wire
(2) The strength of the magnetic field
(3) The speed with which the conductor is moving through the field
(4) The length of the section of the conductor that is within the magnetic field

10. A mica capacitor has six color-code dots on its front and none on its back. The top-row colors are (left to right) *white, yellow, orange* and the bottom-row colors are *red, green, gold*. There are no other markings on the capacitor. What is its voltage rating?
(1) 100 volts (3) 500 volts (5) Not known
(2) 300 volts (4) 1000 volts

11. What is the capacitance of the capacitor in Question 10?
(1) 2.5 pf (3) 25 pf (5) 94.3 pf
(2) 4.3 pf (4) 43 pf (6) 943 pf

12. What is the capacitance tolerance of the capacitor of Question 10?
(1) 1/2 per cent (3) 5 per cent (5) 20 per cent
(2) 1 per cent (4) 10 per cent

13. To shield against the field from a permanent magnet, you should use
    (1) iron.
    (2) a can made of a good conductor, such as copper or aluminum.
    (3) an electric field.
    (4) a material with a high dielectric constant.

14. Electronic components are sometimes enclosed in copper or aluminum cans
    (1) to shield against electric fields only.
    (2) to shield against magnetic fields only.
    (3) to shield against both electric and magnetic fields.
    (4) to prevent interaction between electric and magnetic fields.

15. Which of the following will increase the inductance of a coil?
    (1) Use a core material of higher permeability.
    (2) Wind the coil with spacing between the turns.
    (3) Wind the coil long and narrow.
    (4) Use a core material that has a high dielectric constant.
    (5) Use a core material that has a low dielectric constant.

16. A unit for measuring electric energy is the
    (1) horsepower. (3) watthour.
    (2) watt. (4) volt-ampere.

17. Which of the following would be a satisfactory insulator to use at low frequencies but not for uhf?
    (1) Teflon (3) wood
    (2) polystyrene (4) Micarta

18. The all-around best dielectric material for a fixed capacitor is
    (1) air. (3) mica.
    (2) Teflon. (4) processed ceramic material.

19. What is the voltage across R_2 in Fig. E.1?
    (1) 0 volts (4) 40 volts (7) 75 volts
    (2) 25 volts (5) 50 volts (8) 100 volts
    (3) 30 volts (6) 60 volts

20. What is the value of current I_1 in Fig. E.1?
    (1) 1 amp (3) 3.33 amp (5) 5 amp
    (2) 1.03 amp (4) 4 amp (6) 10.3 amp

21. What is the power used by the entire circuit of Fig. E.1?
    (1) 100 watts (3) 300 watts (5) 400 watts
    (2) 200 watts (4) 333.3 watts

22. Which of the following is *not* a requirement for a good soldered joint?
    (1) The materials being joined must be heated until they are hot enough to melt the solder.

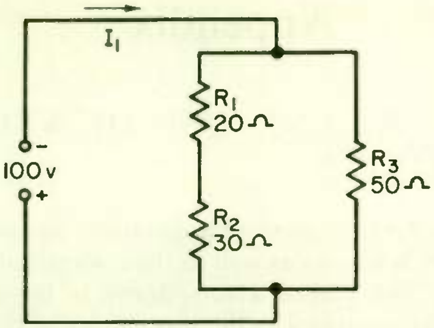

Fig. E.1

(2) Surfaces being joined must be clean and bright.
(3) A good mechanical connection must be made before soldering.
(4) If in an electronics circuit, only pure rosin should be used as the flux.
(5) The soldered joint should be allowed to set for at least 10 min before a current is passed through it.

23. Materials which are good conductors have atoms
(1) with many electrons in their outer orbits.
(2) with free electrons in their nucleii.
(3) that are negatively charged.
(4) that are very light.
(5) with few electrons in their outer orbits.

24. You want a wire with twice the cross-sectional area of the No. 22 wire you now have. What size number wire should you order?
(1) No. 11
(2) No. 19
(3) No. 20
(4) No. 21
(5) No. 23
(6) No. 24
(7) No. 25
(8) No. 44

25. With reference to the resistance of a conductor,
(1) it becomes less for most materials as the temperature increases.
(2) if you double its diameter, its resistance becomes one-half its previous value.
(3) the more the current through it, the higher its resistance.
(4) its resistance is higher at radio frequencies because of "skin effect."

26. A make-contact relay is one in which
(1) the contact points come together with a sliding motion for positive self-cleaning contact.
(2) the contact points are normally open.
(3) the contact points are normally closed.
(4) the points make contact when the coil is deenergized.

Appendix

THE MEANING AND USE OF VECTORS IN ELECTRONICS

1 VECTORS. . . In order to express some quantities completely, it is necessary to express their directions as well as their magnitudes. This is done by means of straight lines, called *vectors*, drawn in the proper directions and having lengths proportional to the magnitudes of the quantities. An arrowhead is placed at one end of each of the lines to indicate the direction of the quantity represented by the line.

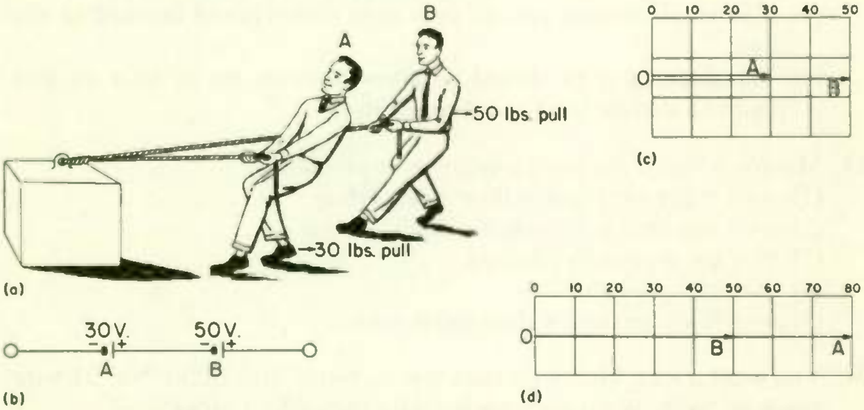

Fig. A.1 **Vectorial representation of two forces acting in the same direction.**

Figure A.1(a) shows two men pulling in the same direction on a box, one with a pull of 50 lb. and the other with a pull of 30 lb. Figure A.1(b) shows an electrical analogy: two voltages in series acting in the same direction, one of 50 volts and the other of 30 volts. The vectors of Fig. A.1(c) represent equally well either the forces of Fig. A.1(a) or the voltages of Fig. A.1(b). The length of each of the two vectors is proportional to the force or voltage, each block representing 10 lb or 10 volts, depending upon which figure the vectors represent. The two vectors are drawn in the same direction because the two forces in Fig. A.1(a), or the two voltages of Fig. A.1(b) are both acting in the same direction.

In Fig. A.1(d) vector *A* of (c) is drawn from the end of vector *B*. By measuring the total vector length, from *O* to *A*, the total force, called the *resultant*, is found. This distance is 8 squares, so that the total pull on the box of Fig. A.1(a) is 80 lb, or the circuit voltage of (b) is 80 volts.

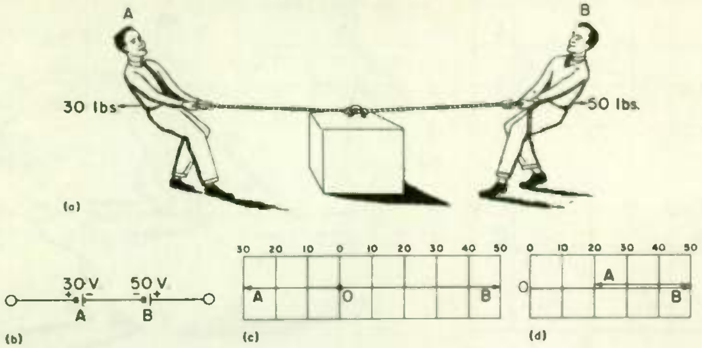

Fig. A.2 Vectorial representation of two forces acting in opposite directions.

In Fig. A.2(a) the same two men are pulling on the box with the same individual forces but in opposite directions. Similarly, Fig. A.2(b) shows the same batteries, but they are now so connected as to buck each other. Figure A.2(c) shows the conditions of (a) and (b) by means of vectors. The length of each vector is, as before, proportional to the force the vector represents. But in this case the vectors are drawn in opposite directions from the starting point *O* to indicate the opposite directions in which the forces are acting.

In Fig. A.2(d) vector *A* is drawn from the end of vector *B in order to find* the net force. Each vector is considered as drawn in the direction indicated by the arrow. Vector *B* is drawn by starting at point *O* and drawing to point *B*. Vector *A* is drawn by beginning where vector *B* ends (at point *B*) and drawing the proper distance in the direction that the force represented by vector *A* is acting. The net distance *OA*, which is two blocks, shows that the net pull on the box of Fig. A.2(a) is 20 lb and that the circuit voltage of (b) is 20 volts.

In Fig. A.3(d) the two men are pulling on the box with the same forces as before, but this time they are pulling at an angle of 45° from each other. This is represented vectorally by Fig. A.3(c), where vector *A* is drawn at an angle of 45° to vector *B*.

To find the resultant force of these two vectors, vector *A* is drawn from the end of *B* as in Fig. A.3(a). The resultant *OA* is the dotted line drawn from the beginning of vector *B* to the end of vector *A*. The resultant vector is 7.4 blocks (net force of 74 lb). The direction the box will move is indicated by the direction of the resultant vector *OA* in (b) and can be

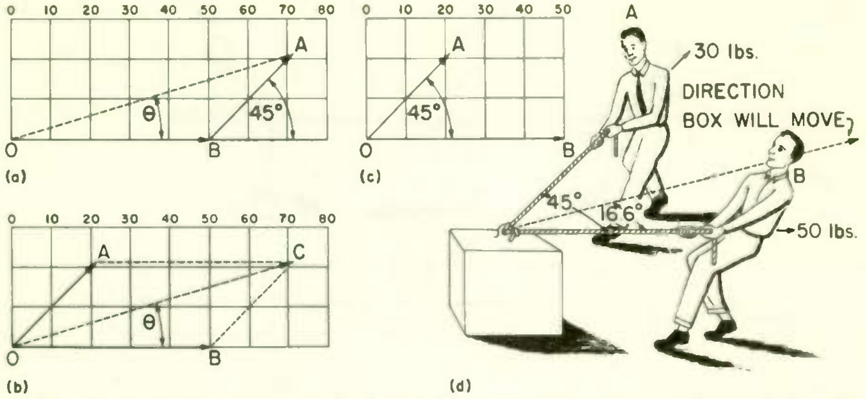

Fig. A.3 **General method of vectorial representation.**

found by measuring angle θ with a protractor.* It is found to be 16.6°. Thus the box of Fig. A.3(d) will move to the right at an angle of 16.6° from the direction in which *B* is pulling. This is indicated by the dashed line in Fig. A.3(d). The force moving the box in this direction will be 74 lb.

Another way to find the resultant of the vectors of Fig. A.3(a) is by the parallelogram method of Fig. A.3(b). Here line *AC* is drawn parallel to *OB* and *BC* is drawn parallel to *OA*. *OC* is then the resultant vector. While this appears at first glance to be a substantially different method than that of (a), actually it is essentially the same. *BC* of (b) is the same length as *OA* and makes the same angle with the horizontal line *OB* as *OA* makes. Hence, if we drew vector *A* from the end of vector *B*, it would take the position now taken by line *BC*. Triangle *OBC* of (b) is therefore identical with triangle *OBA* of (a). The parallelogram method of (b) is merely a convenient method of transferring vector *A* to the end of vector *B*.

2 REPRESENTING A-C VOLTAGES. . . An electrical analogy of Fig. A.3(d) is not possible by using batteries or other direct-current sources. Direct-current voltages must either aid each other or completely oppose each other. With alternating voltages various degrees of aiding or opposing are possible. When two a-c voltages aid each other to the greatest extent possible, they are in phase and can be represented by vectors pointing in the same direction, as in Fig. A.1(c). When the two voltages are

---

* You should redraw this figure to a considerably larger scale in order to get a satisfactorily accurate graphical solution.

180° out of phase from each other, they oppose each other to the greatest possible extent and can be represented by vectors pointing in opposite directions, as in Fig. A.2(c). If two series-connected a-c voltages are 180° out of phase from each other, one voltage being 50 volts and the other 30 volts, the circuit voltage can be represented by the vectors of Fig. A.2(d) and is 20 volts.

In between the extremes of exactly in phase and completely (that is, 180°) out of phase, two a-c voltages or currents may be out of phase by some amount less than 180° but greater than 0°. For example, two a-c voltages might be 45° out of phase from each other. This condition is represented by drawing two vectors at an angle of 45° to each other, as in Fig. A.3(a). If the two voltages are 50 and 30 volts and if they are in series, the circuit voltage is then represented by the resultant of Fig. A.3(b) and is equal to 74 volts. The phase angle between the circuit voltage and the individual voltage of the 50-volt source is 16.6°.

The phase relationship between currents can, of course, be shown by vectors in the same way as described for voltages, and the vectors can be added to obtain the total current. You can also use vectors to show the phase relationship between a voltage and a current by drawing one vector for the voltage, and another for the current. The angle between the two vectors will be the angle of lead or lag between voltage and current.


CLEVELAND INSTITUTE OF ELECTRONICS

CLEVELAND INSTITUTE OF ELECTRONICS / CLEVELAND, OHIO

LESSON NO.	Version	FORMAT	LESSON TITLE
2407	3	Book	OSCILLATORS
2104	1	Book	USING CURVES AND PHASORS
2313	3	Book	TRACING THROUGH DECISION MAKING CIRCUITS
2316	1	Book	RESONANT CIRCUITS
2402	2	Book	OPERATION OF SEMICONDUCTOR DEVICES
2404	3	Book	OPERATION OF TUBES AND TRANSISTORS
2103	2	Book	EASY WAYS OF FIGURING ELECTRONIC PROBLEMS
2304	3	Book	ALTERNATING CURRENT CIRCUITS
2311	4	Book	ELECTRONS IN ACTION PART 1
2312	5	Book	ELECTRONS IN ACTION PART 2
2314	3	Book	SIMPLIFYING CIRCUIT ANALYSIS by USING KIRCHHOFF'S LAWS
2401	3	Book	USING SEMICONDUCTOR DIODES
2101	2	Book	PUTTING FORMULAS TO WORK
2412	4	Book	HOW TO WORK WITH TRANSISTORS
2405	4	Book	AMPLIFIER CIRCUITRY
2315		Book	CURRENTS AND VOLTAGES IN A-C CIRCUITS
2323	1	Book	SERIES AND PARALLEL D-C CIRCUITS
2324	1	Book	VOLTAGE CURRENT AND RESISTANCE IN D-C CIRCUITS
2406	4	Book	RADIO FREQUENCY AMPLIFIERS
2601	4	Book	AUDIO AMPLIFIERS AND EQUIPMENT
2511	1	Book	INDUCTANCE AND CAPACITANCE
2512	1	Book	APPLIED MAGNETISM
2403	3	Book	HOW TUBES AND TRANSISTORS AMPLIFY
2413	1	Book	UNTUNED AMPLIFIER
2102	2	Book	ROOTS PROPORTION AND NEGATIVE NUMBERS
3731	1	Book	YOUR PROGRESS REVIEW AND FCC LICENSE CHECK PART 1
3732	2	Book	YOUR PROGRESS REVIEW AND FCC LICENSE CHECK PART 2