A TWO-WAY RADIO COMMUNICATIONS TRAINING PROGRAM

LESSON RA-1
FM RECEIVERS

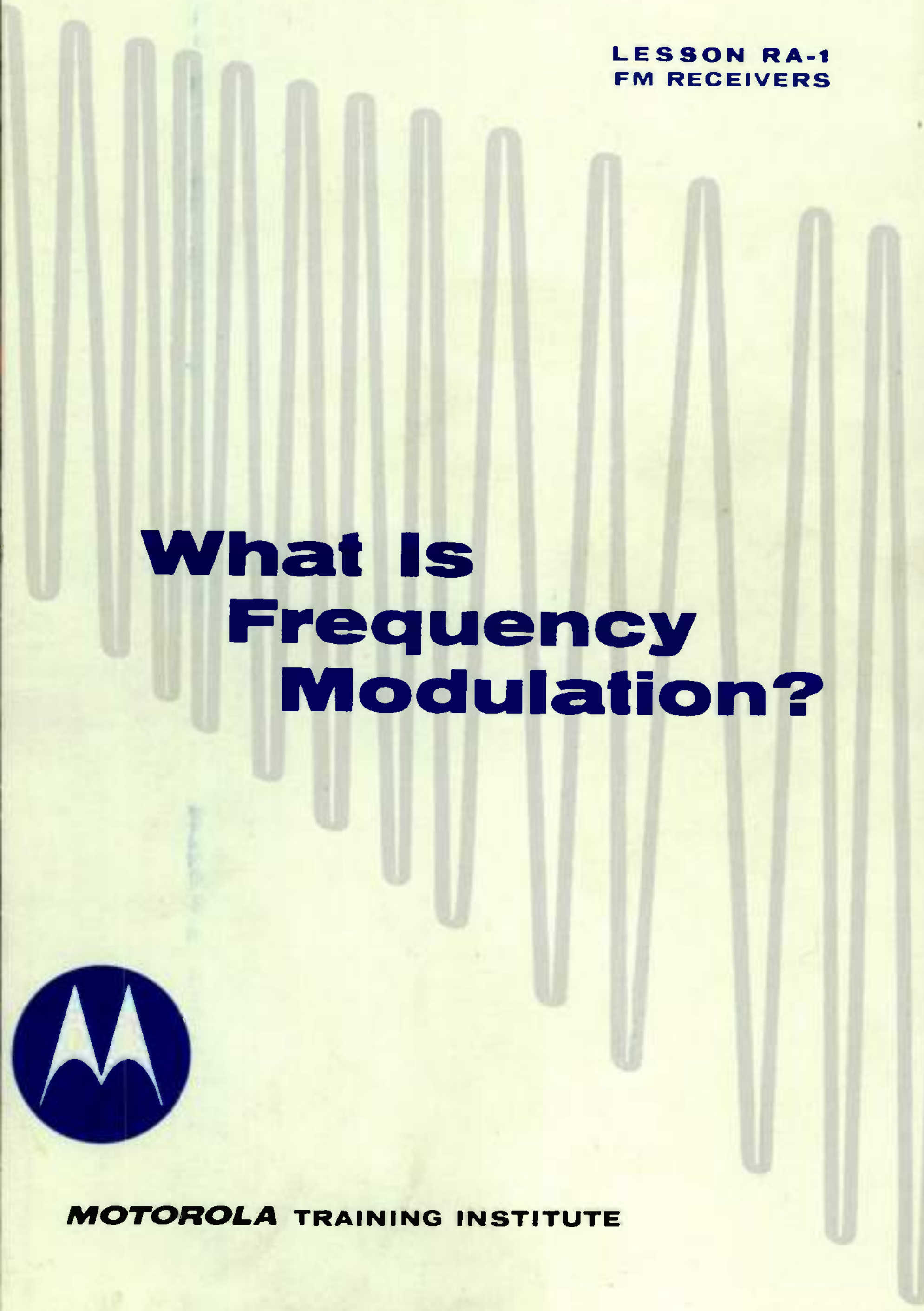

What Is Frequency Modulation?

MOTOROLA TRAINING INSTITUTE

A TWO-WAY RADIO COMMUNICATIONS TRAINING PROGRAM

LESSON RA-1
FM RECEIVERS

What Is Frequency Modulation?

—one of a series of lessons on two-way FM communications—

MOTOROLA TRAINING INSTITUTE
4501 W. AUGUSTA BLVD., CHICAGO 51, ILLINOIS
APPROVED BY THE STATE OF ILLINOIS
DEPT. OF REGISTRATION AND EDUCATION

PREFACE

This is one lesson of a complete Motorola Home-Study Course which presents to the Service Technician both the principles of operation and the maintenance of two-way FM radio systems. The program covers mobile, portable and base station equipment, including the latest transistorized units.

WHAT IS FREQUENCY MODULATION?

LESSON RA-1

TABLE OF CONTENTS

NOTICE
Diagrams and figures referenced in text are "fold-outs" in back of each lesson, for use while studying. The Examinations are also there.

As early as 1927, police started using radio to improve their efficiency by "breaking in" on local broadcasts. The police have since grown to be the largest single user of two-way mobile radio. Faster response to trouble calls, better use of available manpower and savings in tax dollars are the major reasons for this extensive use of radio communications.

WHAT IS FREQUENCY MODULATION?

Introduction

Today, almost all mobile two-way radio equipment uses frequency modulation rather than amplitude modulation. Therefore, if we are to think intelligently about the operation of present-day two-way communications equipment, we must thoroughly understand what is meant by frequency modulation--abbreviated FM.

The FM receiver is remarkably free from noise and adjacent station interference. Also, the FM transmitter is more efficient in that it requires less power input for a given coverage than those used for AM (amplitude modulation). In this lesson, we will become familiar with FM and learn more about its marked advantages over AM.

FM is not particularly new. Not many years have passed, however, since it was first put to practical use. Back in 1939, the first successful state-wide mobile FM system was designed for the Connecticut State Police, by Daniel E. Noble, now Executive Vice President of Motorola Inc. Since then, FM has been accepted universally as the best modulation method for mobile two-way communications systems. World War II emphasized the growing need for reliable, noise-free communication in mobile applications; FM was the solution.

Today's widespread use of FM demands that you, the technician, think in terms of FM as readily as you do in AM. One of the best ways to approach FM is to compare it with AM. Let us start, then, with a quick review of AM and see how the two differ.

Amplitude Modulation

In any basic radio communications system consisting of a transmitter and a receiver, the transmitter produces and radiates a signal in the nature of high-frequency electromagnetic energy. The receiver must select the desired signal and reproduce the message in its original form. Because low-frequency (audio) energy cannot be radiated efficiently, a high-frequency wave, called the "RF" (radio frequency), is used to carry the message to the receiver. That is, the audio message is combined with this RF

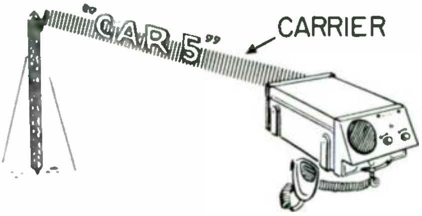

The Carrier in the Two-Way Radio System "Carries" the Message to the Receiver.

carrier, and in this manner the message reaches the receiver as part of the radiated signal. This process of combining the audio with the carrier is called "modulation".

In modulating the carrier at the transmitter it is possible to alter either the frequency or the amplitude.* If the audio causes amplitude changes in the transmitted RF, the system is known as "amplitude modulation".[1] If the audio signal causes corresponding frequency changes in the transmitted RF, the process is called "frequency modulation".

The function of the receiver, whether AM or FM, is to recover the original audio message from the carrier and reproduce it in the speaker.

A Remote Control Console and Base Station Used for Two-Way Communications.

The AM Transmitter

Figure 1A is a block diagram of a simple AM transmitter. The RF carrier, generated in the oscillator stage, is constant in both amplitude and frequency. This RF carrier (represented by the closely spaced waves) is amplified in the power amplifier, fed to the antenna, and then radiated into space. Something has happened, however, to the steady RF amplitude in the power amplifier, as you can see by the output waveform. In the power amplifier stage, modulation has taken place. An audio voltage, applied to the power amplifier at the same time as the RF, has changed (modulated) the RF amplitude according to the amplitude of the audio signal. Let's see how this happened.

When sound waves strike the microphone diaphragm they are changed into corresponding audio voltages. These low-frequency mike voltages are constantly changing both in amplitude and in frequency. This audio voltage is then applied to an audio amplifier (or modulator) where it is amplified to the level required to properly modulate the PA (power amplifier). Thus, there are two voltages applied at the same time to the PA. One of them is the steady RF from the oscillator; the other is the audio (modu-

---

* "Phase" modulation is also possible; it is considered as a form of frequency modulation and will be discussed later in the training.

[1] See TM 11-668 FM Transmitters and Receivers, pages 2-4; also FM Transmission and Reception, by Rider and Uslan, pages 1-10.

lating) signal from the audio amplifier. Although the PA operates as an RF amplifier, its output is made to vary according to the amplitude of the audio signal. The audio signal is a low-frequency alternating voltage. The positive half-cycle of the audio signal increases the RF output; the negative half-cycle lowers the RF output. This means the amplitude of the RF changes in exact accordance with the audio signal, while the frequency of the RF carrier remains constant. Hence the general statement: In amplitude modulation the frequency of the carrier remains unchanged, but the RF amplitude varies with the spoken message.

AMPLITUDE MODULATION

At the AM Transmitter, the Modulating Signal Produces Changes in the RF Amplitude.

Compared to the AM system, the FM system makes more efficient use of the power taken from the primary power source -- the car battery and generator in mobile equipment. The power output of the AM transmitter increases under modulation, to the extent that the power level at the peaks may be four times the power of the unmodulated wave. This means the level of the unmodulated carrier must be lower than the maximum power capabilities of the final output tube. Also, because of the high current and voltage peaks, the power supply and transmitter are bulky, heavy and costly. By comparison, the FM transmitter operates at full power output at all times; its output does not increase during modulation. This greater RF power level means increased coverage for the same amount of power taken from the source. Also, the FM transmitter is smaller, lighter and more economical to build.

The AM Receiver

The desired RF carrier reaches the antenna of the AM receiver, figure 1B, together with RF carriers from other transmitters. The first action within the receiver is the selection of the desired carrier from all the rest. Because this RF voltage at the antenna is very weak, it must be amplified. Figure 1B shows only one block for the RF amplifier, but in the communications receiver there may be more than one high-gain stage. From the RF amplifier this signal is applied to the detector, a device that reacts to amplitude changes. Since the amplitude of the RF waveform is changing according to the spoken message at the transmitter, the detector output is an audio voltage corresponding to the audio waveform produced at the transmitter microphone. This signal is then applied to an audio stage, which amplifies it sufficiently to reproduce the message in the speaker.

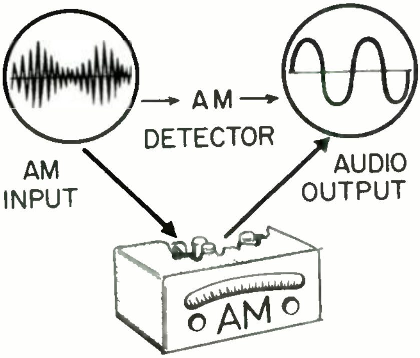

Incoming Amplitude Variations Produce an Output at the AM Detector.

In connection with the detector's response to amplitude variations, we should also talk briefly about noise voltages in the receiver itself. Almost all these noise voltages are amplitude variations. Therefore, noise voltages reaching the AM detector will be heard in the speaker. These noise voltages may be (1) man-made, (2) natural noises from atmospheric disturbances, or (3) they may be generated in the receiver itself. (We will study more about noise in a later lesson.)

The Frequency Modulation Transmitter

Figure 2 shows the arrangement of a very simple type of FM transmitter. The oscillator serves the same purpose in the FM transmitter as it does in the AM system -- to generate an RF voltage of constant amplitude and frequency. There is a big difference, however, when an audio voltage is introduced. In an AM system, the audio produces amplitude variations in the carrier; in an FM system, the audio produces frequency variations. Let's see how this happens. Figure 2 shows a simple Hartley oscillator, with its frequency determined almost entirely by the inductance and capacitance of the tank circuit, L and C. A "condenser microphone" is connected in parallel with the tank so that it becomes a part of the total capacitance of the tuned circuit.

This type of microphone is constructed of two metal plates, slightly separated from each other, forming a small capacitance. One plate is fixed, the other is movable. The movable plate is the mike diaphragm. When it is moved back and forth by the sound waves, the spacing between the two plates varies, and the capacitance of the microphone changes. This varying capacitance in parallel with the tuned circuit alters the total capacitance, changing the oscillator frequency.

As the microphone diaphragm moves closer to the stationary plate, the capacitance increases and the frequency decreases. When the diaphragm moves away from the other plate, the capacitance decreases and the frequency increases. Thus, as the diaphragm continues to move back and forth with the sound waves, an FM signal is produced.

FREQUENCY MODULATION

At the FM Transmitter the
Modulating Signal Produces
Changes in the RF Frequency

Figure 2 shows the waveform of this FM signal in the oscillator plate circuit. The carrier frequency varies with the audio, but the amplitude remains constant. At certain points the waves are close together, representing a relatively high frequency. At other points the waves are further apart, representing a lower frequency. The plate circuit is tuned to the unmodulated oscillator frequency. The FM signal is coupled from the plate circuit to the transmitting antenna.

Very little audio power is required in the FM transmitter illustrated in figure 2. This is another important characteristic of frequency modulation. Regardless of the total RF power output, only a small amount of audio modulating power is needed in an FM transmitter.

Extent of Frequency Change

While discussing frequency variations of the RF carrier, nothing has been said so far as to what extent the RF signal varies above and below the carrier frequency, nor has anything been said as to how often or at what rate the frequency changes. These factors are important and we must know how they are controlled by the audio signal.

Figure 3A shows a typical FM waveform which represents the output of the FM transmitter of figure 2. From the beginning of

A Typical "Desk Top" Base Station
Used for Two-Way Communications.

the waveform to "point 1", the FM frequency is constant. This is an unmodulated RF wave. Then it is modulated between points 1 and 2, the RF increasing in frequency and the waves crowding together. (At 2 the RF reaches its highest frequency.) Between 2 and 3, it is returning to its average or unmodulated frequency. From point 3 to point 4, the carrier swings below its average frequency, the lowest value occurring at point 4. At point 5 the RF has again returned to its normal unmodulated value, ending a complete FM cycle.

Now that we have seen the nature of the frequency modulated wave of figure 3A, let's inspect the audio voltage (figure 3B) which causes this modulation pattern. The audio voltage sinewave is shown in figure 3B. Up to point 1 on the figure the audio voltage has zero amplitude, and the corresponding RF voltage, directly above, is unmodulated. Between 1 and 3 the audio goes through a positive alternation; during this same period, the RF frequency (Fig. 3A) increases and returns to normal. At point 2, where the audio is maximum positive, the RF has its greatest frequency increase. Between points 3 and 5 the audio changes polarity, so that it is now negative. The RF frequency between points 3 and 5 again varies but in the opposite "direction", that is, it swings below its average frequency. At point 4 the audio voltage is maximum negative, and this is where the maximum "below average" RF change occurs. From figures 3A and 3B we see that every time the audio goes positive, the RF frequency increases; every time the audio is negative, the frequency decreases.

A Strong Audio Modulating Signal Causes Large Frequency Changes in the Carrier.

We can also let figure 3B represent the change in capacitance of the condenser microphone. The center line of the waveform will then represent the average capacitance of the microphone. When the waveform is above or below center, it will represent the mike diaphragm moving closer to or further away from the fixed plate and causing the RF frequency to increase and decrease. The next question to consider is the effect of applying a stronger audio signal--talking louder into the mike. This is illustrated by comparing figure 4A with 3A, and 4B with 3B.

Let's assume some definite values of frequency changes in the

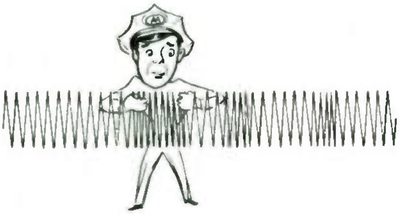

A "Weak" Audio Modulating Signal Causes Small Frequency Changes in the Carrier.

RF waveforms of figures 3A and 4A. Suppose that in 3A the RF frequency increases 500 cycles above and decreases 500 cycles below the unmodulated frequency. At point 2 the RF is 500 cycles higher and at point 4 it is 500 cycles lower than the unmodulated frequency. Now let's look at the audio waveforms of figure 3B and 4B. Compared to figure 3B, the audio at 4B has twice the amplitude. In a well-designed system the RF will vary twice as much from average. That is, at 2 and 4 of figure 4A, the frequency should be 1000 cycles above and below the average RF value. From this discussion of figures 3 and 4 we learn that the amount of frequency change in the RF is controlled by the amplitude of the audio voltage. A weak audio input does not cause as much frequency shift as a strong one.

We can make a further analysis of this action by considering the change of capacitance caused in the condenser mike of figure 2. If we talk louder, the diaphragm of the mike vibrates more vigorously, causing a greater variation in mike capacitance. This, in turn, produces a greater change in the oscillator frequency.[2]

Rate of Frequency Change

Now that we know what determines the amount of carrier frequency shift, the next problem to consider is the rate at which these frequency changes occur -- stated as the number of changes per second. We can determine the answer from figures 5 and 6. Figure 5B shows an audio voltage producing frequency variations in the RF waveform of 5A. Assume the frequency of this audio wave is 1000 cps (cycles per second). Every time the audio goes positive, the RF increases in frequency; and every time the audio goes negative, the frequency decreases. If the audio has 1000 complete changes per second, the RF will change frequency, above and below average, 1000 times. From this we learn that the audio frequency controls the rate of change of the RF.

Let's see if this holds true in figure 6. The audio of 6B has twice as many cycles occurring in a given amount of time as that of 5B so it must have twice the frequency, or 2000 cps. Each time the audio of 6B changes positive and negative, the frequency increases and decreases. The audio

---

[2] See TM 11-688 FM Transmitters and Receivers, pages 15-17; also FM Transmission and Reception, by Rider and Uslan, pages 29-32.

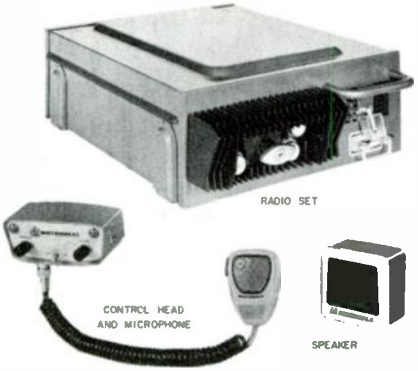

A "Trunk Mount" Type of Mobile Two-Way Radio. The Speaker, Control Head and Microphone are Located Near the Driver.

having 2000 complete changes in one second causes the RF to change its frequency 2000 times per second. Therefore, in an FM system, the audio frequency controls the rate of change of the carrier frequency.[3]

Deviation

Thus far in talking about FM and frequency changes we have avoided a few terms commonly used by engineers and technicians. One often used term is "center frequency". This is the mid-frequency of the FM wave and corresponds to the unmodulated carrier. In figure 3A, from the beginning of the wave up to point 1, the RF is at its unmodulated frequency, and this is center frequency. At points 3 and 5, the RF is again momentarily at center frequency.

"Deviation" is another frequently used term. This refers to the amount of frequency change above and below center frequency. In analyzing the frequency changes taking place in figures 3 and 4 we gave examples of deviation. For figure 3A we assumed changes of 500 cycles above and below center frequency. The deviation is then 500 cycles. We usually write this "±500 cycles", and say, "a deviation of plus and minus 500 cycles". In practice the deviation of the average FM transmission is greater than 500 cycles and is expressed in terms of kilocycles--we might expect to see "±15 kc.". Note that the "deviation bandwidth" for a ±15 kc deviation is 30 kc; this is the total frequency swing.

Quick Review
What have we learned?

1. In an FM transmitter, audio modulation causes the frequency, but not the amplitude, of the RF to change.

2. This change of carrier frequency above and below center frequency is known as deviation.

3. The amount of deviation is controlled by the strength (or amplitude) of the audio signal.

4. The rate of change or number of deviations per second is determined by the audio frequency.

---

[3] See TM 11-668 FM Transmitters and Receivers, pages 15-17; and FM Transmission and Reception, by Rider and Uslan, pages 27-32.

5. Deviation is expressed as "± ...kc".

6. Deviation bandwidth is the total swing, and is twice the stated deviation.

The FM Receiver

We have seen how an FM signal is generated and we know that the audio message is contained in the carrier deviations. In order to complete our system using frequency modulation, we now require a receiver which will recover the audio signal from the FM wave. The fundamental difference is in the type of detector. The AM receiver has a detector which responds to amplitude changes; the detector in the FM receiver must be sensitive to frequency changes.

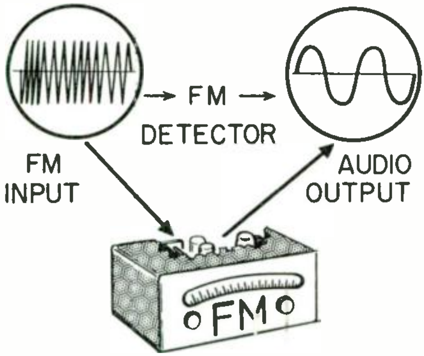

Incoming Frequency Variations Produce an Output at the FM Detector.

Figure 7 is a partial block diagram and simplified circuit of an FM receiver. The incoming signal is an FM carrier and it is transferred from the antenna to the RF amplifiers. The operation of the RF amplifier stage in an FM receiver is the same as in the AM receiver. From the RF section, the amplified signal is coupled to the FM detector by means of a transformer which has a tuned primary and two tuned secondaries. The primary is tuned to the center frequency, but the secondaries are tuned to frequencies above and below center, respectively. Assuming a center frequency of 455 kc, secondary S1 may be tuned to 475 kc, which is 20 kc above center, in which case secondary S2 will be tuned to 435 kc, which is 20 kc below center. A load resistor (R1) in series with a diode rectifier (D1) is connected to secondary S1. During the positive alternations of the applied RF voltage, diode D1 conducts current in the direction shown by the arrows. (In these lessons we will make use of the negative to positive direction of current in order to coincide with the direction of electron flow). This current produces a voltage across R1 which is approximately equal to the RF voltage in the S1 secondary. The RF filter capacitor across R1 maintains the resistor voltage at a steady DC value. Thus, an incoming signal produces a voltage across R1, having the polarity indicated in figure 7 and an amplitude determined by the applied voltage.

Secondary circuit S2 is identical to S1 and operates in the same manner, the RF of secondary S2 being rectified to a DC voltage across R2. The two secondary circuits, however, operate independently of each other---the only common connection is at the resistors. Insofar as the output is concerned, the voltage of R1 and R2 are in series with each other but have opposing polarities. The output voltage will then be the difference of these two voltages.


A Modern, Low-Drain Two-Way Radio Having a Completely Transistorized Receiver and Power Supply.

Figure 8 shows what happens when an FM signal is applied to the circuit. (For convenience, figure 8 shows only the load resistors, R1 and R2, of figure 7.) Figure 8A indicates that when the center frequency of 455 kc is present, the voltages of R1 and R2 are equal in value. This is true because the secondaries are off resonance by the same amount and the resulting voltages in the secondaries are equal. (We have assumed 5 volts across each resistor for convenience.) The output terminals, A and B, are at the same charge or potential. Since voltage is the difference between two charges or potentials, the voltage across AB is zero. (A voltmeter connected across A and B of figure 8A will record zero voltage.) Thus, for the FM detector, zero output voltage occurs when the applied signal is at center frequency. The next step is to determine what happens when the signal varies above or below center frequency.

When the incoming signal swings above center (we call this positive deviation), the frequency is higher than 455 kc and the tuned circuit of S1 is nearer to being in resonance with the incoming signal. Being nearer to resonance, the RF voltage in the tuned circuit increases and the resulting voltage across R1 must also increase. At the same time, the tuned circuit of S2 is further from being in resonance and the RF voltage in S2 decreases. This results in less voltage across R2. In figure 8B we have assumed the voltage of R1 increases to 6 volts while that of R2 decreases to 4 volts. The difference between A and B is now 2 volts and A is positive with respect to B. Thus, when the incoming signal is above center frequency (positive deviation), the FM detector produces a positive output voltage.

When the incoming signal swings below center frequency (negative deviation), the condition of figure

A Compact, Low-Drain Two-Way Radio Which Makes Extensive Use of Transistors.

8C occurs. At a frequency below center, S2 is nearer to being resonant and produces a larger voltage, this time at R2. Secondary S1, on the other hand, is further from resonance and its output voltage decreases. As assumed in Figure 8C, the voltage across R2 increases to 6 volts while that across R1 decreases to 4 volts. Again there is a difference of 2 volts between terminals A and B, but A is now negative with respect to B.

To summarize, whenever the signal is at center frequency the output is zero. During a positive deviation of the signal the output becomes positive, but for negative deviations the output swings negative. Thus, the FM detector is a device that converts frequency variations into changes of voltage.

At the FM transmitter the audio amplitude determines the amount of deviation while the audio frequency determines the rate of deviation. At the receiver this process must be reversed. That is, the amount of deviation from center should determine the audio amplitude (amount of output voltage), while the rate of deviation should determine the audio frequency. Let's see how this happens!

The amount of output voltage of figure 7 depends upon the difference or the unbalance of voltages across R1 and R2 The resistor voltages depend upon the amount of RF voltage in the secondaries. The secondary voltages, in turn, are determined by how near the circuits are to being resonant with the incoming signals. For higher deviations the frequency is closer to resonance in one secondary and further from resonance in the other. This results in a greater difference in the resistor voltages and a higher voltage at the output terminals. Thus, the higher the deviation, the higher the output voltage; the lower the deviation, the lower the output voltage. This satisfies our first requirement-the amount of deviation determines the amount of output voltage (audio amplitude).

Our second requirement is that the rate of deviation determines the frequency of the output voltage. Every time the signal deviates from above center to below center, the output changes from positive to negative, and vice versa. The detector output thus changes polarity at the same rate that the frequency swings above and below center. Hence, the frequency of the recovered audio must coincide with the rate of deviation of the applied FM signal.

Lightning and Other Sources of "Noise" Interfere With AM Reception.

Other differences between the FM receiver and the AM receiver will be discussed in later assignments. For the purpose of this assignment, however, the basic difference is in the type of detector used. The circuit of figure 7 is not used in present day receivers, but it best illustrates FM detection. Communications type FM receivers usually incorporate a circuit known as a "discriminator" for FM detection. As we shall see later, the action is similar to that shown in figure 7.[4]

At the beginning of this lesson we said one purpose of the assignment was to determine what is meant by FM. In addition, we indicated certain inherent advantages of FM. These advantages will now be discussed.

FM is More Interference-Free

Almost all noise energy is characterized by its irregular amplitude variations. In the AM system the detector is designed to respond to amplitude variations. Little can be done at the detector to eliminate noise voltages without sacrificing the desired signal modulation. Although circuits have been devised which seemingly distinguish the sharp-peaked noise waveforms from the more even waveforms of a spoken message, these circuits, at best, leave a lot to be desired and are only partially effective. Other types of amplitude limiting of noise pulses are successful to some extent but under adverse conditions the results are poor.

FM receivers incorporate special circuits known as "limiters" which drastically reduce or eliminate amplitude variations. This does not affect the audio message,

---

[4] See FM Transmission and Reception, by Rider and Uslan, pages 249-251 and 293-298.

for in frequency modulation all of the intelligence is contained within the frequency deviations. Eliminating amplitude changes has no effect on frequency deviations. Thus the FM receiver, by means of limiter circuits, is free from almost all noise interference--this is probably the most outstanding advantage of FM.

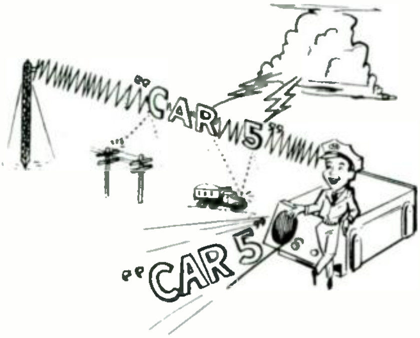

Lightning and Other Noise Sources Have Little Effect Upon FM Reception.

FM signals are also less sensitive to interference from other signals. For an AM system, a desired signal must be at least 50 to 100 times stronger than an interfering signal in order to override the latter to the point where it causes no trouble. For an FM system, however, interference-free operation is often maintained with a ratio as low as 2 to 1.[5]

The FM Transmitter is Efficient

The FM transmitter is more efficient than the AM transmitter. If a power tube has a rating of 60 watts, the entire 60 watts can be utilized as carrier power in FM. The FM carrier, you will recall, does not increase in power during modulation. The FM transmitter may thus work at maximum output at all times. In an AM system using the same tube, 20 watts must be reserved for audio modulation, leaving only 40 watts remaining for RF power. The carrier power is then only 40 watts for the AM transmitter, but for FM it is 60 watts. Also, where battery power is at a premium (as it is in most mobile applications) the ability to use all the power available for the carrier means greater coverage. Furthermore, the additional power required to operate the higher power audio stages in the AM transmitter is not necessary in FM.

FM Bandwidth

Every system must have its drawbacks as well as its good points, and the bandwidth required for FM transmissions is a disadvantage at the present state of the art. Commercial FM transmissions (88-108 mc) have a deviation of plus and minus 75 kc, a deviation bandwidth of 150 kc. In addition, an unused " guard

---

[5] See TM 11-668 FM Transmitters and Receivers, pages 32 and 33; also FM Transmission and Reception, by Rider and Uslan, pages 44-46 and 210-212.

band'' is needed between channels. The total bandwidth for each commercial FM broadcast is then 200 kc. Even for voice communications in 2-way communications systems, where the deviation has been reduced to as low as ±5 kc, channel spacings must be slightly wider than theoretically needed for AM voice transmissions.

national
MOTOROLA
RADIO COMMUNICATIONS
service

You have now completed your first assignment. If you have not studied the ''Introduction'' sent with this first lesson, do so at this time. In this booklet you will find specific directions for completing and sending in the examination at the back of this lesson.

IMPORTANT WORDS USED IN THIS LESSON

AM DETECTOR: A demodulator incorporated in an AM receiver which recovers the desired intelligence from the amplitude variations of the AM carrier.

AMPLITUDE MODULATION: A system of modulating the RF carrier, whereby the amplitude of the radiated signal is made to vary in accordance with the modulating voltage, but the carrier frequency remains constant.

CARRIER: RF energy of a specific frequency generated at the transmitter and radiated into space. The carrier, when modulated, serves to transport the intelligence to the receiver.

CENTER FREQUENCY: The term applied to the average carrier frequency of an FM wave. This center frequency is evident when the FM carrier is undisturbed (in the absence of modulation).

DEVIATION: Frequency changes of the FM carrier, resulting from modulation. Deviation is expressed as the extent of frequency change from the center frequency.

DEVIATION BANDWIDTH: The total frequency swing of the modulated FM wave. Numerically, deviation bandwidth is equal to twice the stated deviation.

ELECTROMAGNETIC WAVE: Radiant electric energy, such as that emitted from the transmitter antenna. Electromagnetic energy consists of an electric field and a magnetic field, both of which are essential for continued propagation of the wave. Light and heat are other examples of electromagnetic energy---the difference is in the wavelength (frequency).

FM DETECTOR (DISCRIMINATOR): A demodulator incorporated in an FM receiver, which recovers the desired intelligence from the deviations of the FM carrier. This is accomplished by converting the frequency variations into an audio voltage.

FREQUENCY MODULATION: A system of modulating the RF carrier, whereby the frequency of the carrier is made to vary in accordance with the modulating voltage, but the carrier amplitude remains constant.

STUDENT NOTES

STUDENT NOTES

IGURE
3A

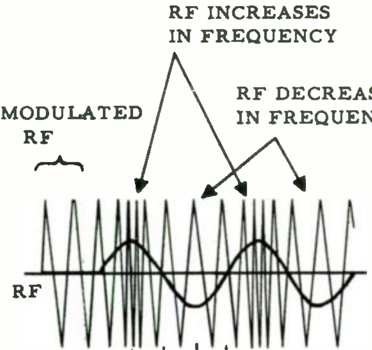

FIGURE
3B

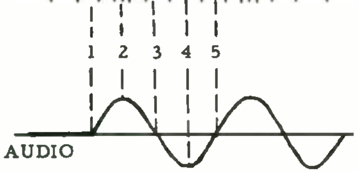

FIGURE
4A

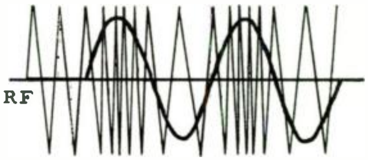

FIGURE
4B

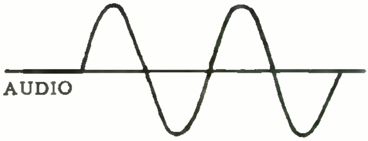

FIGURE
5A

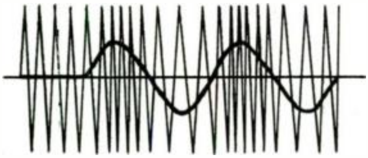

FIGURE
5B

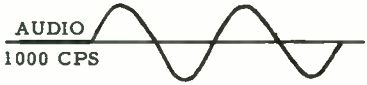

FIGURE
6A

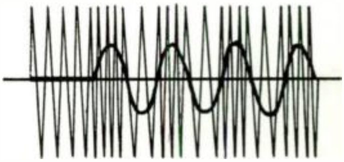

FIGURE
6B

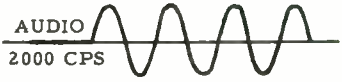

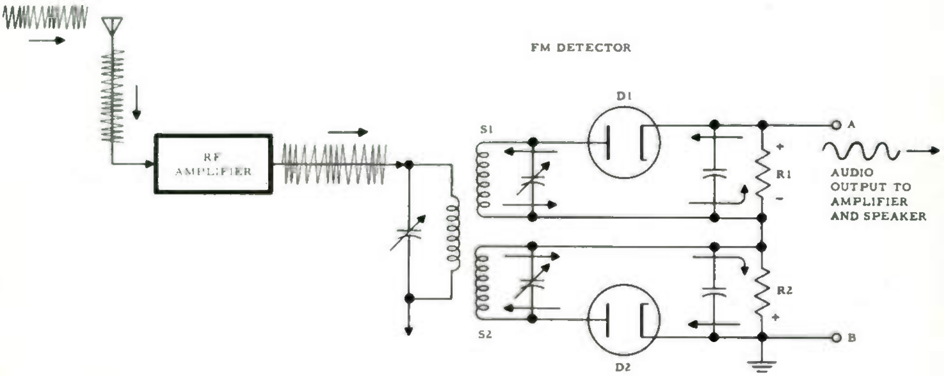

FIGURE 7

FM RECEIVER, SHOWING FM DETECTOR

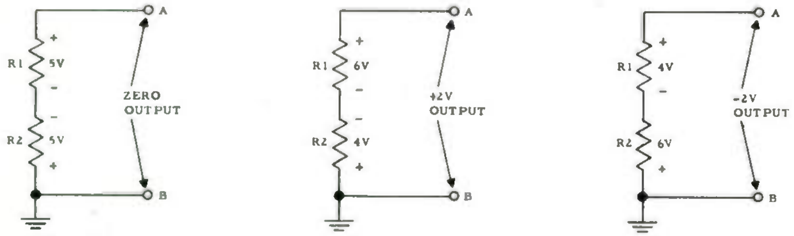

ZERO DEVIATION
FIGURE 8A

"+" DEVIATION
FIGURE 8B

"–" DEVIATION
FIGURE 8C

FM DETECTOR- - OUTPUT VOLTAGE

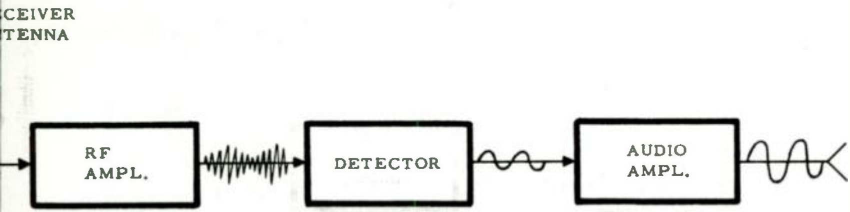

AMPLITUDE MODULATION RECEIVER

FIGURE 1B

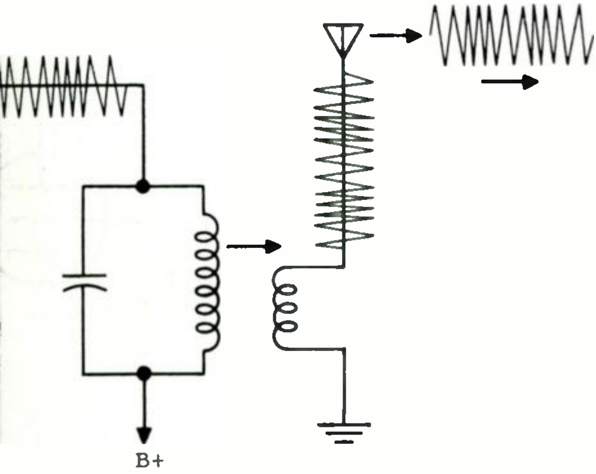

ION TRANSMITTER

2

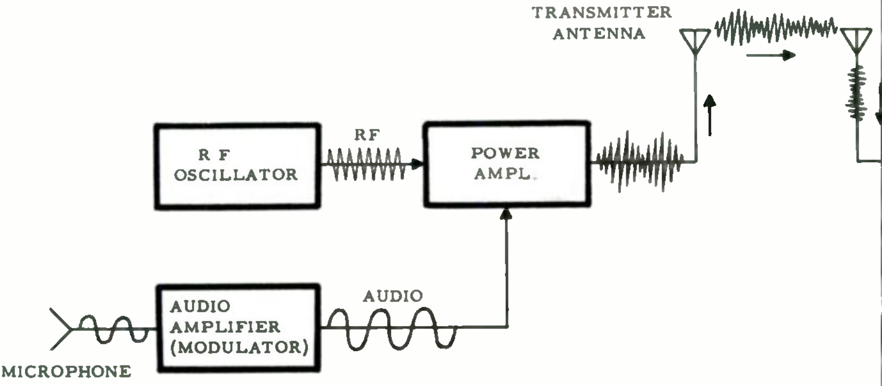

AMPLITUDE MODULATION TRANSMITTER

FIGURE 1A

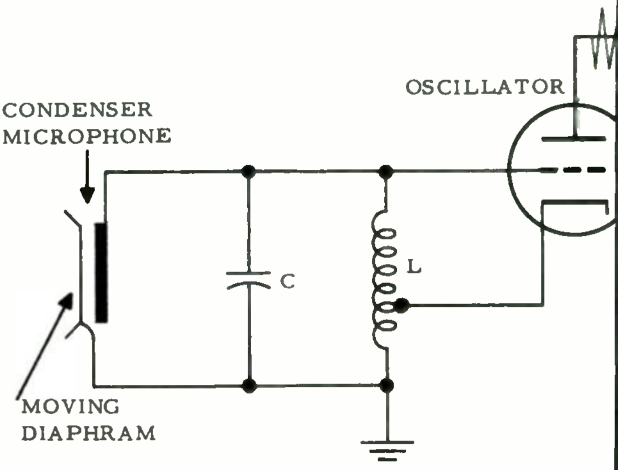

FREQUENCY MODULA

FIGU

Motorola Training Institute

4501 West Augusta Blvd., Chicago 51, Ill.

Please PRINT or use STAMP.

Name ______________________________ **Student No.** ______

Street __________________ **Zone** ____ **Date** ______

City _______________ **State** ________ **Grade** ______

Examination, Lesson RA-1

1. In the blanks provided, write the letter corresponding to the correct waveform.

A.

B.

C.

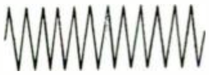

D.

Audio Waveform ______
AM Waveform ______
FM Waveform ______
Unmodulated RF ______

2. The waveform below contains points of center frequency, positive deviation, and negative deviation. Indicate the correct corresponding letters in the spaces at the right.

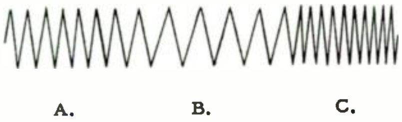

Negative Deviation ____
Positive Deviation ____
Unmodulated RF ____

3. UNDERSCORE the correct words in the following statements.
   The amount of audio voltage applied to the modulator in the FM transmitter determines the (amount)(rate) of deviation.
   The audio frequency determines the (amount)(rate) of deviation.

4. CHECK any and all correct answers.
   In an FM receiver, the discriminator:
   - A. Produces an audio output voltage from the incoming FM deviations. ______
   - B. Recovers the "message" from an FM signal. ______
   - C. Maintains a constant DC voltage output even when the incoming signal swings higher or lower in frequency. ______
   - D. Output becomes alternately positive and negative when an FM signal is applied. ______

5. In the space to the right of each of the following statements, write FM or AM, whichever applies.
   - A. Modulation does not change the total power output of the transmitter. ______
   - B. When modulated, the frequency of the transmitter output varies with the modulating signal. ______
   - C. During modulation, considerable more power is taken from the power source. ______
   - D. In general, there is less interference heard in the receiver due to noise. ______

national
MOTOROLA
RADIO COMMUNICATIONS
service

A TWO-WAY RADIO COMMUNICATIONS TRAINING PROGRAM

LESSON RA-2
FM RECEIVERS

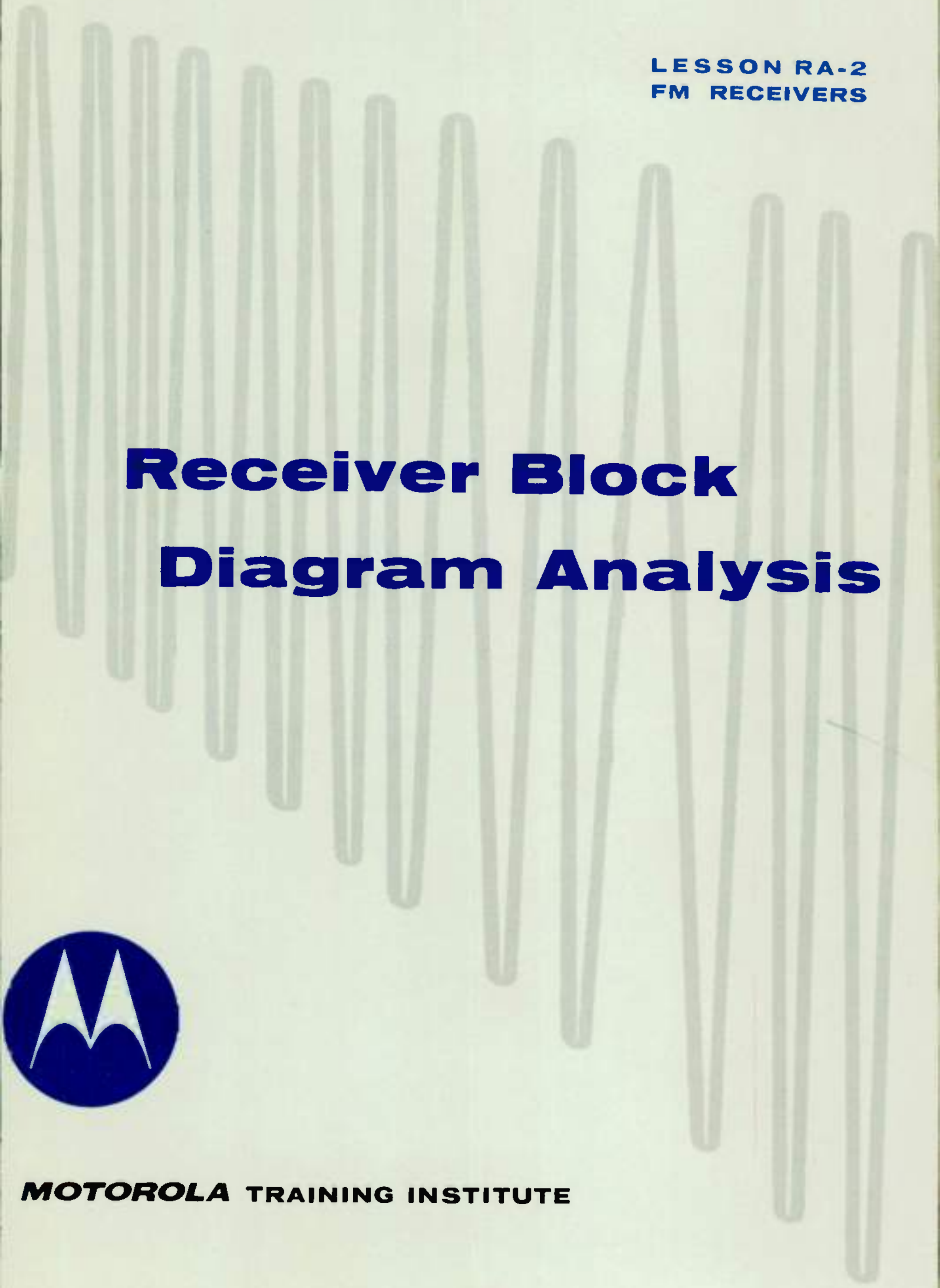

Receiver Block Diagram Analysis

MOTOROLA TRAINING INSTITUTE

A TWO-WAY RADIO COMMUNICATIONS TRAINING PROGRAM

LESSON RA-2
FM RECEIVERS

Receiver Block Diagram Analysis

—one of a series of lessons on two-way FM communications—

MOTOROLA **TRAINING INSTITUTE**
4501 W. AUGUSTA BLVD., CHICAGO 51, ILLINOIS
APPROVED BY THE STATE OF ILLINOIS
DEPT. OF REGISTRATION AND EDUCATION

PREFACE

This is one lesson of a complete Motorola Home-Study Course which presents to the Service Technician both the principles of operation and the maintenance of two-way FM radio systems. The program covers mobile, portable and base station equipment, including the latest transistorized units.

THE FM COMMUNICATIONS RECEIVER

BLOCK DIAGRAM ANALYSIS

LESSON RA-2

TABLE OF CONTENTS

NOTICE

Diagrams and figures referenced in text are "fold-outs" in back of each lesson, for use while studying. The Examinations are also there.

Two-Way Radio has saved many lives and much property value by permitting the fire chief to direct and coordinate all fire fighting efforts at the scene as well as remain in contact with headquarters for instantaneous response to requests for aid. Fire Two-Way Radio can also lower insurance rates, and save tax dollars.

THE FM COMMUNICATIONS RECEIVER
BLOCK DIAGRAM ANALYSIS

Lesson RA-2

Introduction

In the previous lesson we studied the nature of the frequency-modulated wave and learned how the audio modulating signal controls the extent of the carrier frequency deviation, as well as the rate of deviation. We also learned of the advantages of FM in two-way communications, the principal one being its inherent noise-free reception.

In this lesson we shall make use of several block diagrams as we continue our study of the communications receiver. We shall determine the purpose of each stage within the receiver and learn how each stage must function. After this, we shall be prepared to study the individual sections of the receiver. This lesson is confined to the single question, "What happens?" The answer to "How is this accomplished?" will be taken up in later assignments. In these early lessons, power supply considerations will be omitted. This permits simpler diagrams, so that your attention can be confined to the particular circuit under discussion. (Various types of power supplies, together with their operation, are included in the next, section of the training.)

Receiver Requirements – The "Superhet"

In order to provide interference-free operation a receiver must have three characteristics: selectivity, sensitivity, and fidelity.

Selectivity is the ability of a receiver to separate the desired signal from all others. The average receiving antenna may intercept hundreds of radio waves, each producing a voltage at its own frequency. All these RF voltages are transferred from the antenna to the receiver input and it thus becomes necessary to select the desired signal, rejecting all others, before any of these signals reach the detector. This is not accomplished in a single stage, nor in one circuit only; many tuned circuits

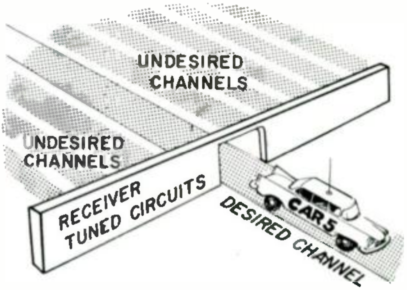

Selectivity in a Receiver is the Ability of Its Tuned Circuits to Accept Only the Desired Channel Signals.

are required for this purpose. They all precede the detector, and they all have the same ultimate function--to select the desired channel. (In two-way radio practice, "channel" is the name often used in referring to the signal we want to hear. More accurately, channel refers to that portion of the radio spectrum allocated for the transmission of intelligence, and a channel is usually designated in terms of the channel mid-frequency. At the present time, channel spacings are 20 kc in the low-band (24-54 mc) and 30 kc in the high-band (144-174 mc).

Receiver sensitivity depends primarily upon the gain of the amplifier stages. Amplification alone, however, is not enough. When the received signal is very weak, it must undergo considerable amplification if the message is to be reproduced in the speaker with sufficient volume. In such cases, it may be difficult or even impossible to hear the message because of noise or interference from other stations. Sensitivity, then, also depends upon the receiver's selectivity and its ability to minimize noise. The true sensitivity of a receiver must be stated in terms of the weakest signal that can be applied at the input to produce a satisfactory output at the speaker.

Fidelity in any receiver is its ability to reproduce a message which is free from noise, interference and distortion. (Any type of interference present in the output must be considered as a form of distortion.) Receiver fidelity, then, depends on much more than the detector and audio sections. In the FM communications receiver, fidelity also depends upon the receiver's selectivity and upon its sensitivity.[1]

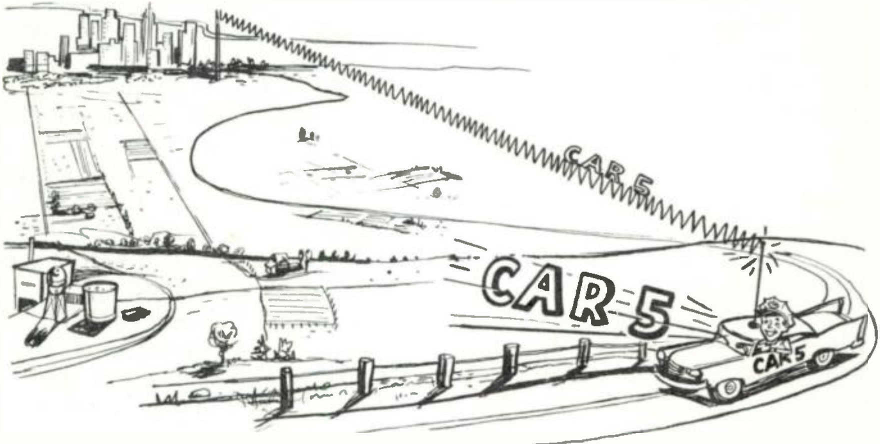

The Sensitive Receiver Reproduces the Weak Signal "Loud and Clear."

---

[1] See TM 11-668 FM Transmitters and receivers, pages 114-115; also FM Transmission and Reception, by Rider and Uslan, pages 263-267.

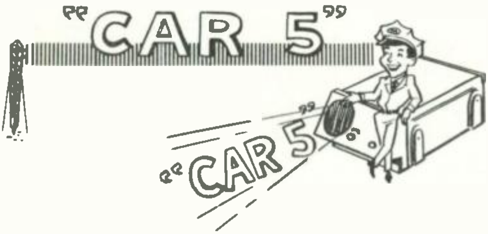

Fidelity in a Receiver is the Ability to Reproduce an Undistorted Signal.

Because the superheterodyne receiver exhibits excellent selectivity as well as sensitivity, most of the receivers in use today are of this type. In the superheterodyne receiver--or "superhet"--incoming RF signals are converted to a lower frequency by means of a mixer. The mixer, for this reason, is sometimes called a "frequency converter." This lower frequency signal (still RF, but called the "intermediate frequency" or "IF"), is always the same for a given superhet. All superhets operate in the same way, regardless of the frequency or kind of modulation employed. Let us, then, first review the operation of the familiar AM broadcast receiver before proceeding to the more intricate FM communications type of receiver.

Simple Broadcast Receiver

Figure 1 is a block diagram of a simple AM receiver designed to operate within the standard broadcast band. The oscillator and mixer stages to the left indicate that this is a superhet. To provide for converting the incoming RF to a lower (IF) frequency, a second RF signal is generated in the local oscillator stage, and this signal combines with the RF in the mixer to produce the IF output.

Whenever two signals are combined (heterodyned) in a non-linear device, such as a mixer, a number of new frequencies are produced; for our purpose, the "difference" frequency is the one selected. A frequency of 455 kc (commonly used in broadcast band receivers) is taken as the IF in figure 1. At the same time the receiver is tuned to a station, the oscillator is adjusted so that its frequency is 455 kc higher than the incoming RF. For example, when we turn the receiver tuning knob to receive station WGN, Chicago, two things take place simultaneously. First, a tuned circuit between the antenna and the mixer is tuned to WGN's frequency (720 kc), so that maximum voltage from this station reaches the mixer grid; other signals are attenuated insofar as possible. Second, the oscillator is adjusted to generate a signal of 1175 kc, which is 455 kc higher than the RF.

The RF signal of 720 kc and the oscillator signal of 1175 kc are both applied to the mixer, and the difference or IF frequency becomes available in the plate circuit. Now, a most important factor in mixing two signals is that any modulation present on either or both of the applied signals will be present also in the IF output waveform.

Since the oscillator waveform in this case is an unmodulated RF, the only modulation on the IF signal is the modulation of the incoming RF signal.

The advantages of selectivity, sensitivity, and fidelity which pertain to the superhet type of receiver are the result of converting the RF to this lower frequency IF signal. Since the receiver's IF stages operate at the same frequency for all incoming signals, these stages have fixed-tuned circuits, with controlled selectivity. All desired signals thus receive the same amount of amplification and are subjected to the same degree of selectivity. The selectivity of the IF amplifier is much greater than would be possible at the higher frequency RF level. The problems of feedback, too, becomes simplified, and the IF amplifier is more stable in operation.

While most of the selectivity in the superhet receiver is realized in the IF section, there must also be some rejection of unwanted signals at the RF level. Without RF selectivity the receiver will be subject to image frequency response.

Besides the desired RF, another frequency--the image frequency--can combine with the oscillator voltage in the mixer stage to produce the IF frequency of the receiver. Thus, it is essential to reject undesirable signals before they reach the mixer; this is RF selectivity.

For broadcast receivers, where the oscillator is always higher than the RF, the image frequency will be 455 kc above the oscillator frequency. For higher frequency receivers the oscillator may operate below the RF, in which case the image frequency will be below the RF and the oscillator.

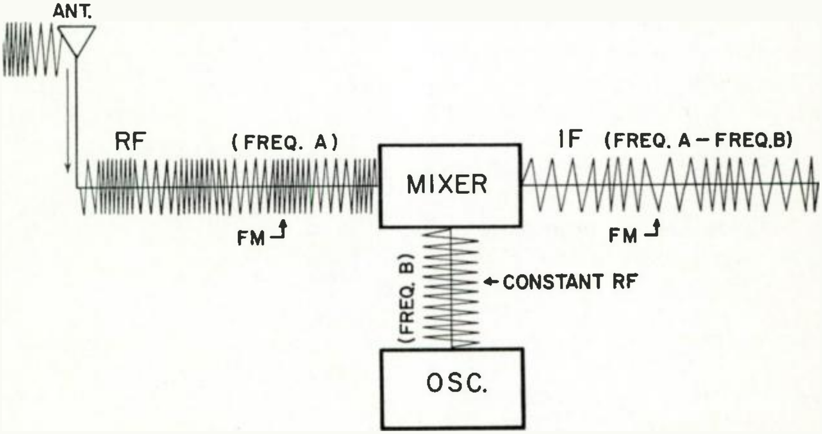

In the Superhet Receiver the Incoming Signal "Beats" Against Another (Oscillator) RF Voltage in the Mixer to Produce the Lower-Frequency IF.

As an example of image frequency for the broadcast receiver, consider the previous example where the receiver is tuned to station WGN, 720 kc. With an IF of 455kc, the oscillator operates at 1175 kc. Now suppose that a strong station in the vicinity of the receiver is transmitting at a frequency of 1630 kc. If the signal from this transmitter reaches the mixer stage--not having been sufficiently attenuated in the tuned RF circuit--it will heterodyne with the oscillator to form a difference frequency. The difference frequency is 455 kc (1630 less 1175); it will be accepted in the IF circuits.

The separation between the image frequency and the RF to which the receiver is tuned is always equal to twice the IF frequency. Whether the image is above or below the RF, is determined by the oscillator. If the oscillator is above the RF, so is the image; if the oscillator is below, the image will also be below. In the broadcast receiver, the separation of 910 kc (twice 455kc) for the image is satisfactory for the tuning range of the receiver. In order to provide good image rejection in high-frequency receivers, the image must be further separated from the RF. This requires the use of a higher IF frequency.

The detector following the IF amplifier stage recovers the audio signal from the amplitude-modulated IF signal. For AM detection, the diode detector is the most practical since it is economical and has relatively little distortion. The audio voltage from the detector is too weak to operate the speaker, so an audio amplifier section is included to boost the signal power to a level sufficient for this purpose. The principal requirement of the detector and audio stages is that all distortion must be held at a minimum.

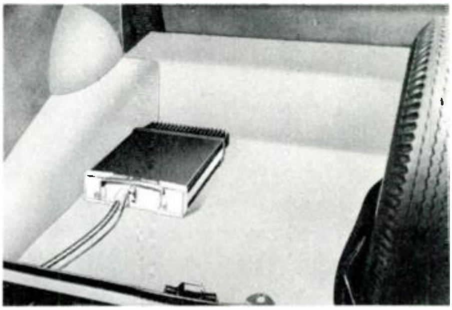

Typical Installation of a Mobile Two-Way Radio in the Trunk of an Automobile. The Speaker, Microphone and Control Head are Located Near the Driver.

Basic FM Receiver

The basic FM receiver shown in figure 2 is not much different from the arrangement of figure 1. The oscillator, mixer, IF amplifier and audio sections are almost identical both in purpose and operation. The outstanding differences between the two receivers are (1) the type of detector required, and (2) the addition of a limiter stage in the FM receiver.

Because commercial FM signals are transmitted in the frequency range of 88-108 mc, the tubes and circuitry of the FM receiver will differ somewhat from that of the AM broadcast receiver just described. Also, in order to prevent image frequency response, the IF is usually 10.7 mc instead of 455 kc. The strength of the average FM signal reaching the receiver is also less than that in the AM receiver. Hence, the IF section of the FM receiver usually includes two or more stages of high-gain amplification. This additional amplification is also necessary for proper operation of the limiter (which follows the IF amplifiers).

Limiting Removes All of the Noise Peaks from the Waveform, Thereby Producing a Constant-Amplitude IF Wave.

Before inspecting the limiter further, let's look briefly at the FM detector. Most communications FM receivers make use of a discriminator, because of its relatively high audio output (sensitivity) and its fidelity. This same discriminator, however, is also affected by amplitude changes and its output will be noisy unless all amplitude variations have been eliminated from its input. Thus, the signal to the discriminator must be free from any amplitude variations--noise pulsations in particular. It is the function of the limiter to provide just such a signal.

The effect of the limiter on the IF waveform is illustrated in figure 3. The FM waveform at the left contains not only the desired signal, but many amplitude variations as well, most of them being made up of sharp pulsations of noise voltage. The waveform at the right shows the FM output from the limiter. It will be noted in this output waveform, that all amplitude variations have been eliminated. The amplitude of each cycle remains constant and the only remaining modulation consists of the frequency variations--these have not been disturbed by the limiter. Regardless of the strength of the incoming signal to the limiter, the output voltage cannot exceed certain limits which are designed into the limiter stage. Assuming that the IF amplifiers have sufficient gain, even the weakest of signals at the antenna will result in a strong input to the limiter. Consequently, all signals reaching the discriminator are equal in amplitude. The effectiveness of the limiter stage in reducing or eliminating amplitude variations (noise) from the signal depends directly upon the strength of the signal applied to that limiter. In practice we say that strong signals "saturate" the limiter. This action is considered more fully in a later lesson.

The FM detector (discriminator) of figure 2 recovers the audio intelligence from the incoming frequency deviations by converting these deviations into corresponding voltages. (The action is much the same as for the FM detector described in the preceding lesson.) The discriminator audio output is then amplified in the audio section of the receiver and the message is reproduced in the speaker.[2]

FM Communications Receiver – The Double Superhet

Before the second world war not too much was known about high frequency equipment and operation, as we know it today, and two-way mobile communications was restricted to a 30-40 mc range.

After the war the 152-162 mc range was released by the FCC for mobile applications, and it was not long before this band became popular for reliable, short-range communications. For convenience, the term "low-band" is often used to designate the lower frequency band, now expanded to 24-54 mc, and "high-band" to designate the upper range, which now covers from 144 to 174 mc. By 1952 the state of the art had progressed still further and mobile systems in the 450-470 mc range were in operation. For convenience we usually refer to this band as just "450 mc."

Figure 4 is a block diagram showing a high-band FM communications receiver designed to operate at 172 mc, but the same arrangement could be used in connection with a low-band (24-54 mc) or a 450 mc receiver. The same general pattern will apply to any communications receiver, regardless of its operating frequency. Notice that there are two oscillators, two mixers, and two IF sections. This type of receiver is called a "double" superhet. The incoming RF is first converted to a high-frequency IF for improved image-frequency rejection; then the signal is again converted, this time to a low-frequency IF, to permit greater amplification and selectivity. We can best see the action and advantages of the double superheterodyne by following the signal through the receiver.

Incoming signals from the antenna first encounter an RF amplifier stage. Because of the high frequency of the incoming signal, it is not practical to expect a great amount of gain and selectivity in this stage. By carefully designing the RF amplifier, however, satisfactory rejection of unwanted sig-

---

2. See TM 11-668 FM Transmitters and Receivers, pages 114 and 115.

nals is possible, and the gain of a single pentode amplifier stage may be between 5 and 10. Noise generation within the stage must be kept to an absolute minimum, since any noise generated within the RF amplifier is amplified along with the signal and may interfere with reception.

A properly designed RF stage can be expected to apply a stronger signal to the mixer. At the same time, there is some rejection of unwanted signals, particularly the image frequency.

At the mixer, the RF signal combines with the 160 mc signal from the oscillator to produce the first (or high frequency) IF of 12 mc. This comparatively high value of IF places the image frequency far enough away from the channel frequency to be rejected in the tuned RF circuits. With the oscillator operating below the RF, the image will be 12 mc below the oscillator frequency, or 148 mc.

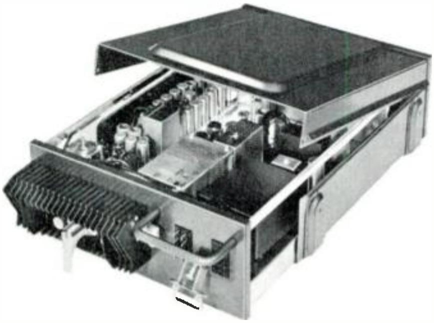

Inside this Two-Way Radio we see the Power Supply at the Right, the Transmitter in the Center, and the Receiver at the Left.

The most important requirement for the oscillator is stability, and the most stable oscillator known today is the crystal controlled oscillator. Crystal oscillators at 160 mc are not practical at the present time for use in mobile equipment, so an oscillator of 32 mc is employed and the fifth harmonic of 32 mc is selected to provide the desired 160-mc signal. This receiver is required to operate on only one frequency; hence all the tuned circuits are fixed-tuned. This affords greater efficiency and circuit stability.

The 12-mc IF signal combines at the second mixer with the 12.455 mc signal from the second oscillator (also crystal controlled) to produce the second (or low-frequency) IF of 455 kc. A second image frequency, made possible by the second mixer, must be rejected in the 12-mc IF section. With the second oscillator operating at 455 kc above the 12-mc IF, the image frequency at the second mixer will be 910 kc above 12 mc, or 12.910 mc. Since the 12-mc signal from the first mixer encounters highly selective tuned circuits in the IF amplifier stage before reaching the second mixer, the 12.910 image frequency is rejected in the 12-mc tuned circuits.[3]

Selective Filter

While the RF and first IF sections are efficient in rejecting the image and other undesired frequencies, their relative selectivi-

---

3. See TM 11-668 FM Transmitters and Receivers, pages 114 and 115.

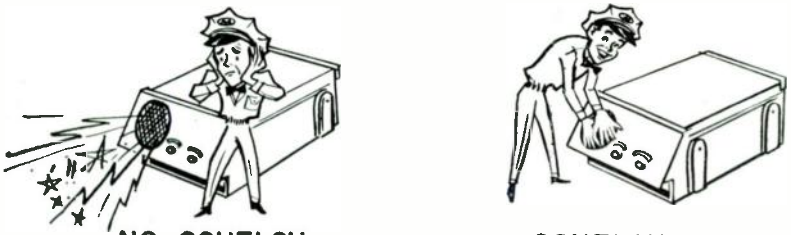

NO SQUELCH

SQUELCH

Without a Squelch Circuit the Two-Way Communications Receiver Would be Very Noisy Between Messages. A Squelch Circuit "Silences" the Receiver So that the Noise is Not Heard.

ty at these high frequencies is not sufficient to reject signals of neighboring channels, which must be eliminated before they reach the discriminator. By employing a low-frequency second IF (455 kc), sharper selectivity thus becomes possible. Because the use of conventional tuned transformers does not meet the requirements of the modern communications receiver, and because the conventional tuned circuit presents the problem of alignment, Motorola has developed a highly-selective, permanently-tuned, low-loss filter which is inserted immediately following the second mixer. This filter has numerous circuits permanently tuned to the IF frequency and passes all the deviations within the operating channel, but rejects all signals outside the channel. (More will be said about this filter when we begin our study of the last IF section.)

Since the selectivity of this filter determines the ultimate selectivity of the receiver, the low IF stages which follow the filter have the sole function of amplifying the signal. The three high-gain IF stages provide far more than the minimum gain required, thus introducing a "reserve gain", which is so essential for continued receiver sensitivity over a prolonged period.

Following the second IF section are two limiter stages which eliminate any amplitude variations or noise pulsations which may be present. The input to the discriminator is then a pure FM signal containing only the deviations imparted to the wave at the transmitter. The discriminator recovers the audio component from the FM variations and its audio output is applied through two audio amplifier stages to the speaker.

Squelch

In a commercial FM broadcast receiver, the transmitter carrier is present even though the modulation may be temporarily discontinued. In the case of the communications receiver the situation is different--the carrier is present only when a message is being transmitted. During the intervals between these messages the carrier is removed. In the absence of any RF to provide this quieting, noises entering the receiver as well as noises generated within the receiver itself cause an objectionable noise or "hiss" in the speaker. This is particularly bothersome when the receiver must be monitored constantly. A squelch circuit quiets the receiver between transmissions by preventing the noise voltages from passing through the audio stages and reaching the speaker.

As shown in figure 4, the squelch system operates into the first audio amplifier, preventing that tube from functioning. Without an incoming signal (between transmissions), the noise cannot get through the audio stage to the speaker. As soon as a signal is received, however, the squelch circuit becomes inoperative and the audio works normally. The squelch circuit controls the bias on the audio amplifier so that it operates only when a signal is coming in. At other times (when the carrier is removed) the audio stage is biased beyond cutoff and is inoperative.

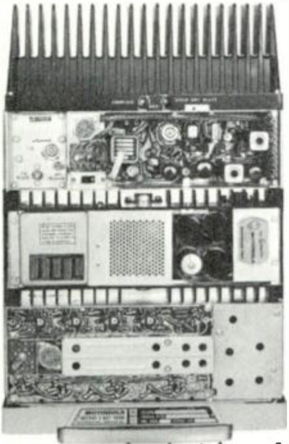

Here we see the Insides of a Modern Two-Way Radio. The Transistorized Receiver is at the Bottom, the Transistorized Power Supply in the Center, and the Transmitter is at the Top.

Two-Frequency Operation

Certain applications require the communications receiver to operate on either of two frequencies. This can be accomplished by employing two oscillators at the first mixer but it is not advisable to operate two oscillators into the same mixer at the same time in an effort to receive two signals simultaneously--the receiver becomes susceptible to many spurious responses.

Figure 5 shows a practical arrangement for two-frequency operation. There is a minimum number of additional parts and yet the operation on either channel is excellent. Two separate crystal-controlled oscillators are required, one for each channel. Depending upon which channel is to be received, the correct oscillator is placed in operation by completing its cathode circuit to ground through the switch. For example, when the switch is at channel 1 the 160 mc oscillator is operated; when the switch is at channel 2, the 160.12 mc oscillator is operated.

This receiver will operate on either 172 mc or 172.12 mc, both of which will be picked up by the antenna. Because these two frequencies are comparatively close together, they are both amplified in the RF stage, and the receiver operates equally well on either channel. (The frequencies may be spaced as much as 500 kc apart, but the RF circuits must be tuned to the middle frequency. For two frequencies further apart, there will be some degradation.)

When the switch is at channel 1 (172 mc), the 160–mc oscillator is operating. The 172-mc signal combines with this oscillator voltage to produce a 12-mc IF, while the 172.12-mc signal combines to produce an IF of 12.12 mc. Both of these IF's are accepted in the first IF stage and reach the second mixer, where they both combine with the 12.455-mc oscillator voltage. While the 12–mc IF produces a second IF of 455 kc, the 12.12–mc input produces an IF of 335 kc. The 455-kc IF (which represents the 172-mc signal) passes through the filter and the rest of the receiver, but the 335-kc IF (representing the 172.12-mc signal) is far beyond the frequency limits of the 455-kc filter, and this signal does not get through to the last IF amplifier.

When the switch is at channel 2 (172.12 mc), the 160.12-mc oscillator is operating; now, only an RF of 172.12-mc will produce the correct IF of 455 kc at the second mixer and reach the last amplifier. The unwanted 172-mc signal produces an IF of 575 mc at the second mixer and is rejected by the filter.

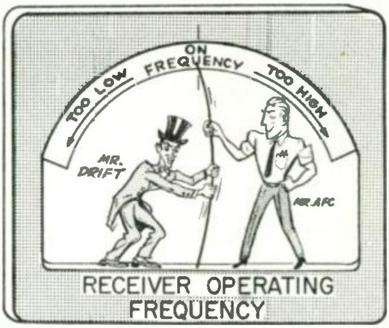

An Automatic Frequency Control (AFC) Circuit Keeps the Receiver Frequency "In Step" with the Incoming Signal.

Automatic Frequency Control

Earlier in this lesson we mentioned three frequency ranges for most mobile FM communications. At the two lower frequency ranges the use of a crystal oscillator provides ample frequency stability, and reliable operation is achieved. At 450 mc, however, the situation is somewhat different. A small frequency change at the oscillator becomes a large change at the high-frequency mixer, due to the high order of multiplication, and may not allow continuous operation under all conditions. While the circuit of figure 4 uses the fifth harmonic, it is not uncommon for a 450–mc receiver to use the 12th harmonic. Besides this change at the receiver, the transmitter may have a similar frequency variation. It is evident that something must be done to hold the receiver oscillator near the transmitter frequency.

To insure satisfactory operation of the receiver, a system of automatic frequency control (abbreviated AFC) is used. Even though the oscillator is crystal controlled, it is still possible to shift its frequency to some extent by changing the capacitance or inductance of its tuned circuit. Automatic frequency control swings the receiver oscillator close to the correct frequency. The arrangement is shown in figure 6.

The frequency control tube is a DC amplifier. Its output circuit is arranged so that the stage acts as a variable capacitance in the oscillator tank circuit. The effective capacitance changes according to the tube conduction or plate current, and this in turn may be controlled by altering the value of the DC grid bias. All that is missing now is a circuit that reacts "voltage-wise" to frequency changes.

From preceding discussions we know that the FM discriminator changes frequency variations into voltage variations. We utilize this discriminator output as a source of control voltage for the AFC control tube. In this case, we are not interested in the normal variations of the incoming signal; instead, we require a voltage that indicates the center (or average) frequency. A filter (not shown in figure 6) evens out the discriminator voltage to an average DC value. When the local oscillator frequency is correct, the discriminator output is zero. When the local oscillator is off frequency (or if the transmitter frequency should drift), the discriminator output becomes either positive or negative. This voltage is applied to the frequency control tube and changes the conduction of the stage, which in turn changes the capacitance across the oscillator circuit and shifts the oscillator frequency nearer to the correct value.

The oscillator frequency cannot reach the exact value, for this would remove any correcting voltage from the discriminator. The system, however, serves to keep the oscillator near enough to the correct value to permit normal operation of the receiver.

The AFC system can be designed to operate over a wide range of frequency drift. However, if the AFC is given too much authority in shifting the frequency of the oscillator, there is always the possibility that the AFC circuit will respond to a signal on a neighboring channel. The interfering signal will "capture" the receiver, preventing regular messages from getting through until the interfering signal is removed.[4]

Summary

Since the FM receiver uses the superhet circuit commonly found in AM receivers, most of the stages of the FM receiver operate in the same manner as those of the AM set.

The two receivers differ as to the type of detector employed. The

---

4. See TM 11-668 FM Transmitters and Receivers, pages 88-90 and 175 and 176; also FM Transmission and Reception, by Rider and Uslan, pages 72-76.

detector in the AM receiver must respond to changes of carrier amplitude; the FM detector (or discriminator) must respond to changes of carrier frequency.

In order to prevent undesirable amplitude variations from reaching the discriminator, limiters are used immediately ahead of it. Also, sufficient input voltage for proper operation of these limiters must be provided by the preceding RF and IF amplifier stages.

For maximum frequency stability, oscillators are crystal controlled. In addition to crystal oscillators, receivers in the 450-470 mc band are often equipped with an AFC system in order to keep the oscillator near the correct frequency.

Without "squelch," the high-gain communications receiver is very noisy between transmissions. The squelch circuit, however, disables the audio section of the receiver during those times when there is no carrier present, and prevents noise from reaching the speaker. As soon as the carrier is received, the squelch circuit becomes inoperative and the receiver performs normally.

Finally, because of the high frequency of the incoming signals, the tuned circuits of the front-end of the receiver cannot reject all the unwanted signals; this task is performed in the low-frequency section of the receiver. The highly selective Permakay filter immediately following the second mixer rejects all signals except those of the operating channel, permitting only the desired signal to pass through the last IF section to the detector.

IMPORTANT WORDS USED IN THIS LESSON

IMAGE FREQUENCY: That undesired frequency which combines with the local oscillator at the mixer to produce a difference frequency equal to the IF frequency. The image frequency is always spaced from the desired RF frequency by an amount equal to twice the value of the IF frequency.

LIMITER: As used in the FM receiver, the limiter is an amplitude controlling device. When the input signal reaches a certain amplitude, the output voltage has reached a maximum value beyond which it cannot increase, regardless of the strength of the input.

OSCILLATOR: A device that generates AC. As used in the superhet receiver, the local oscillator provides the additional RF signal which is required in order to convert the incoming RF to a lower frequency (IF).

SELECTIVITY: The ability of a receiver to discriminate between radio waves having different carrier frequencies. The selectivity of a receiver depends upon the efficiency of its tuned circuits to pass certain frequencies with a minimum amount of attentuation which rejecting (unwanted) frequencies.

SENSITIVITY: The ability of a receiver to respond to weak signals, reproducing the intelligence satisfactorily in the output.

SQUELCH: A circuit that silences the receiver between transmissions. Without the squelch, the normally high noise level of the RF receiver produces a hiss which becomes annoying when the receiver is monitored constantly.

SUPERHETERODYNE RECEIVER (SUPERHET): A receiver which uses a local oscillator and mixer to convert all incoming signals to a lower (fixed) frequency known as the intermediate frequency (IF). The fixed-tuned circuits at the IF level allow for greater amplification, stability and selectivity.

STUDENT NOTES

STUDENT NOTES

Motorola Training Institute

4501 West Augusta Blvd., Chicago 51, Ill.

Please PRINT or use STAMP.

Name ____________________ Student No. ______

Street ______________ Zone ____ Date ______

City ______________ State ________ Grade ______

EXAMINATION LESSON RA-2

1. In order to produce an IF signal in a receiver, which of the following are required:

   A. A mixer. ______
   B. A local oscillator. ______
   C. A limiter stage. ______
   D. An RF signal. ______
   E. A squelch circuit. ______
   F. A discriminator. ______

2. A receiver is intended to operate at 150 mc, and the IF frequency is 8 mc. What is the correct local oscillator frequency?

   A. 166 mc. ______
   B. 142 mc. ______
   C. 136 mc. ______
   D. 126 mc. ______

3. A receiver is designed to receive signals of 150 mc, and its local oscillator is 138 mc. What is the image frequency?

   A. 162 mc. ______
   B. 12 mc. ______
   C. 126 mc. ______
   D. 174 mc. ______

4. Write "true" or "false" at each of the following statements:

   A. The squelch circuit acts to prevent noise from reaching the speaker between messages. ______
   B. The squelch circuit stops the audio section of the receiver from operating only when there is no signal coming into the receiver. ______
   C. The limiter of an FM receiver acts to reduce the noise heard in the speaker when a message is being received. ______
   D. For good limiting action, the signal amplitude at the limiter should be small compared to the noise voltages. ______

5. Check <u>all</u> correct answers. Automatic frequency control (AFC):

   A. Keeps the local oscillator near the correct frequency. ______
   B. Operates from the DC output voltage of the discriminator. ______
   C. Changes the frequency of the local oscillator. ______
   D. Keeps the transmitter from drifting too far off frequency. ______

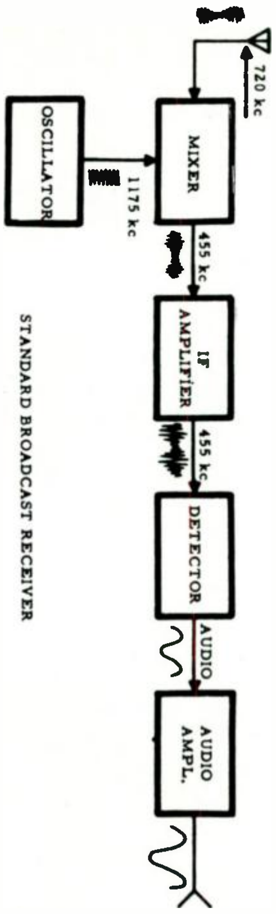

STANDARD BROADCAST RECEIVER

FIGURE 1.

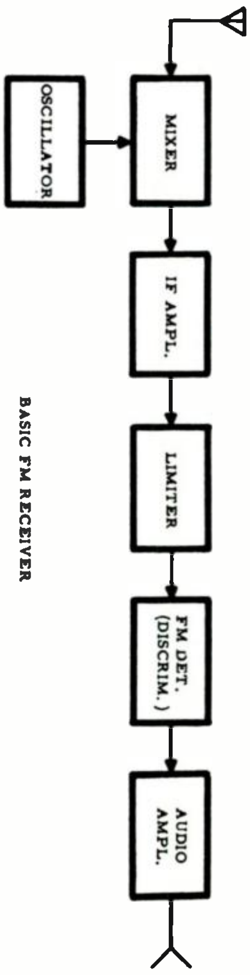

BASIC FM RECEIVER

FIGURE 2.

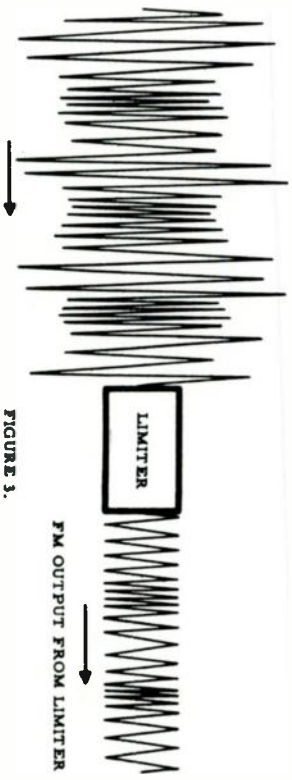

FIGURE 3.

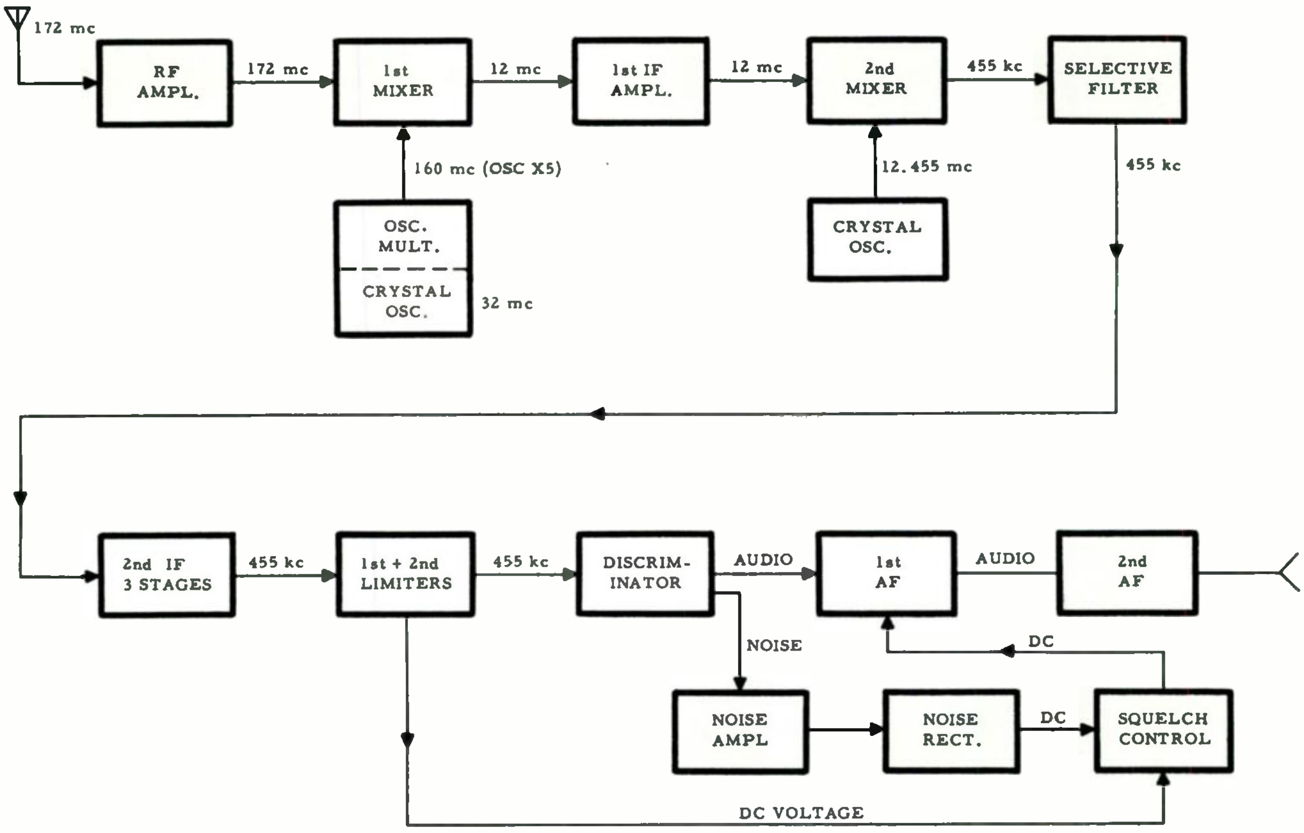

BLOCK DIAGRAM - COMMUNICATIONS RECEIVER

FIGURE 4

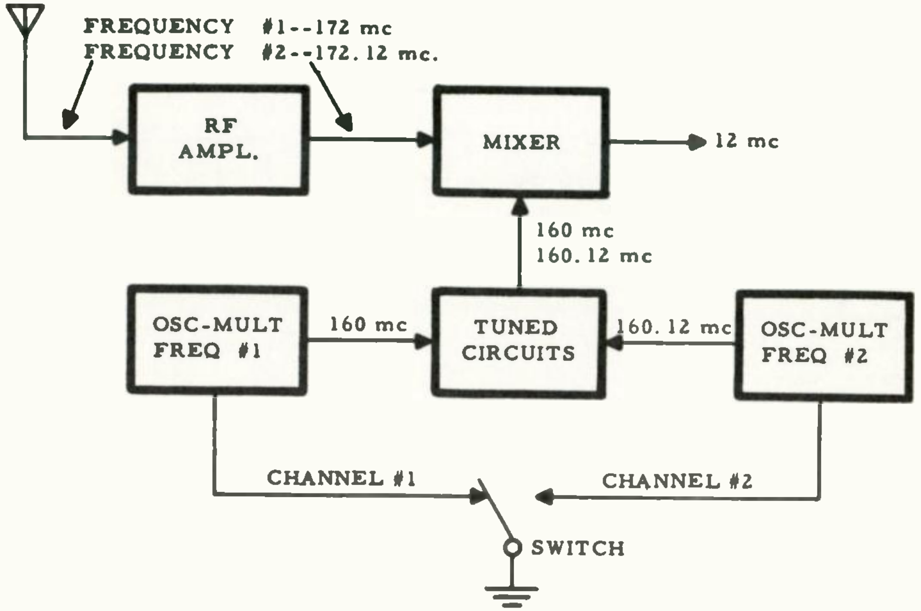

FIGURE 5

RECEIVER OPERATION FOR TWO FIXED FREQUENCIES

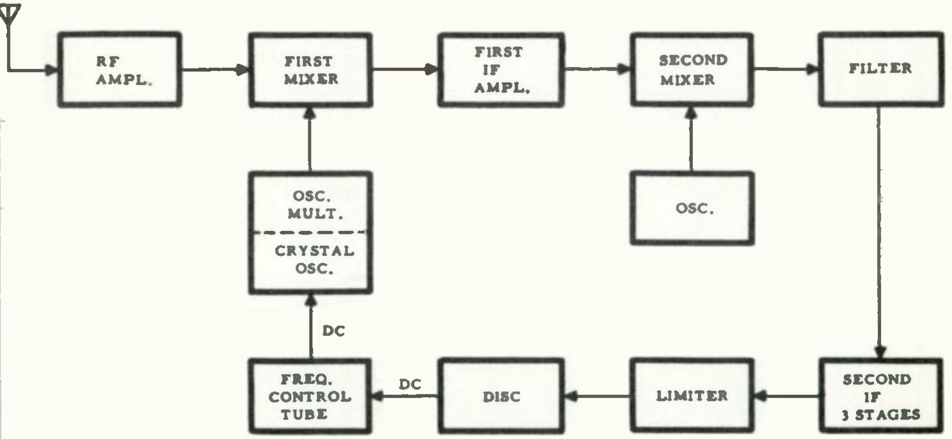

AUTOMATIC FREQUENCY CONTROL

FIGURE 6

national

MOTOROLA
RADIO COMMUNICATIONS

service

A TWO-WAY RADIO COMMUNICATIONS TRAINING PROGRAM

LESSON RA-3
FM RECEIVERS

RF Amplifier

MOTOROLA TRAINING INSTITUTE

A TWO-WAY RADIO COMMUNICATIONS TRAINING PROGRAM

LESSON RA-3
FM RECEIVERS

RF Amplifier

—one of a series of lessons on two-way FM communications—

MOTOROLA TRAINING INSTITUTE
4501 W. AUGUSTA BLVD., CHICAGO 51, ILLINOIS
APPROVED BY THE STATE OF ILLINOIS
DEPT. OF REGISTRATION AND EDUCATION

PREFACE

This is one lesson of a complete Motorola Home-Study Course which presents to the Service Technician both the principles of operation and the maintenance of two-way FM radio systems. The program covers mobile, portable and base station equipment, including the latest transistorized units.

THE RF AMPLIFIER
LESSON RA-3
TABLE OF CONTENTS

NOTICE

Diagrams and figures referenced in text are “fold-outs” in back of each lesson, for use while studying. The Examinations are also there.

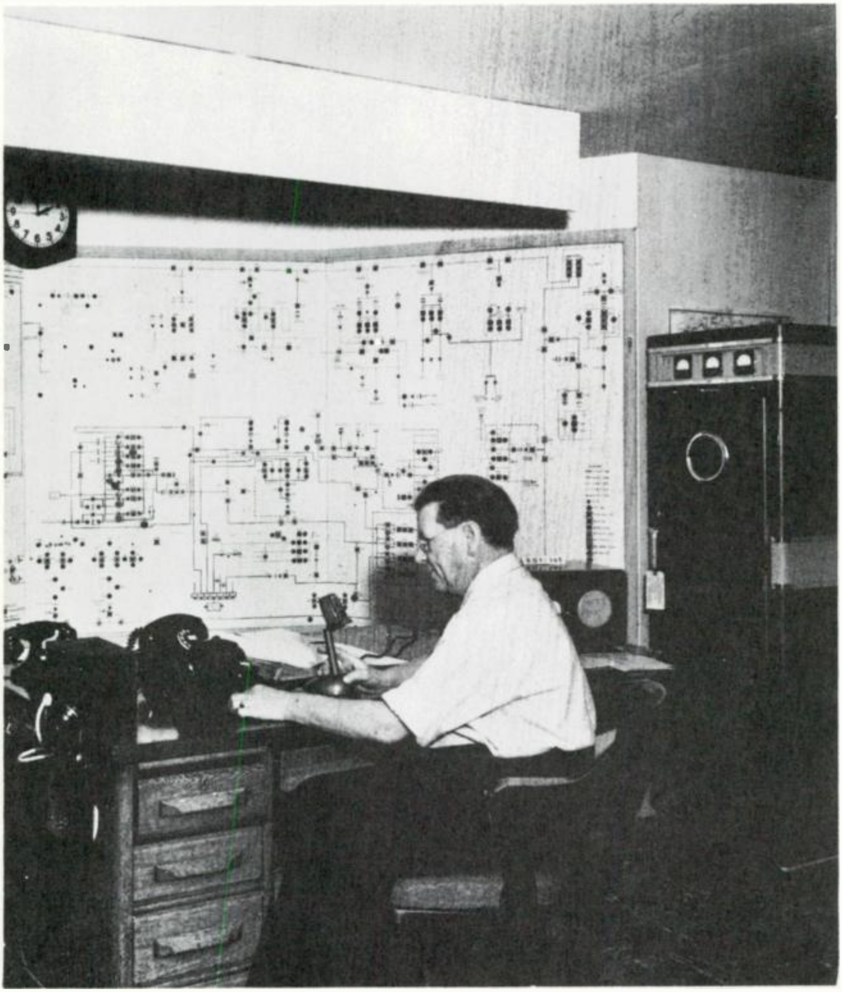

Public Utilities have greatly improved their service by equipping emergency, maintenance and construction crews with two-way radio. With trial installations made as early as 1940, they were among the first to be recognized by the FCC as an essential user of mobile radio.

THE RF AMPLIFIER

Lesson RA-3

Introduction

In discussing the advantages of FM over AM for two-way communication, we studied the FM wave and we saw, in lesson 1, how audio modulation causes the RF carrier to vary in frequency according to the amplitude and frequency of the modulating signal. The FM communications receiver was discussed in lesson 2 and block diagrams were used in connection with our study of the purpose and overall operation of each stage.

We shall now proceed to analyze the complete operation of the various stages within the receiver, beginning in this lesson with the RF amplifier stage. Our discussion will be concerned mainly with amplification, selectivity and "noise". We shall also discuss the class of operation and study the automatic gain control circuit which is often found in the RF section of the communications receiver.

Requirements of the RF Stage

RF stages are used extensively in receivers, both low-band and high-band. At 450 mc, however, it is difficult to provide much amplification with ordinary tubes and circuitry. Receivers in this and higher frequency ranges often incorporate a highly selective filter to provide the necessary selectivity, but otherwise apply the signal directly to the mixer.

Where an RF stage is used, efficient operation depends upon the ability of that stage (1) to reject interfering signals as far as possible by incorporating sharp RF selectivity, and (2) to establish the best possible signal-to-noise ratio at the mixer input by providing an optimum amount of

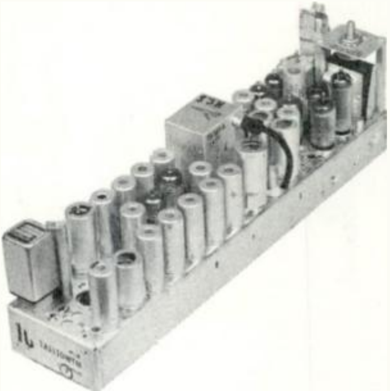

High-Band Receiver Chassis of the Type Used in Two-Way Radio Systems.

amplification. The undesired signals which must be rejected include the image frequency, those at the intermediate frequency of the receiver, and all others which might cause interference. (More will be said about interfering signals later in this lesson).

While circuits are effective in rejecting undesired signals, they also cause some insertion loss (attenuation of the desired signal). The RF gain, however, more than compensates for this loss, with the result that the amplified signal at the mixer establishes a better signal-to-noise ratio--better than when the signal is applied directly from the antenna to the mixer.

In the design of the RF stage--particularly in the choice of the RF tube--attention must be given to the amount of noise generated. Unless this noise is held to a minimum the signal-to-noise ratio will suffer, resulting in a decrease of receiver sensitivity.

The RF stage must also (1) provide an impedance match between the antenna circuit and the RF grid circuit, and (2) isolate the antenna from the local oscillator. (Oscillator energy reaching the antenna will radiate into space and interfere with the operation of other receivers in the vicinity.)[1]

Now that we know the requirements of the RF stage, we are ready to begin our study of this section of the receiver. We will start by discussing the signal-to-noise ratio.

Signal-To-Noise Ratio

Small signal voltages entering the receiver must compete with any noise in the receiver; and the total noise, whether external or internal in origin, limits the small-

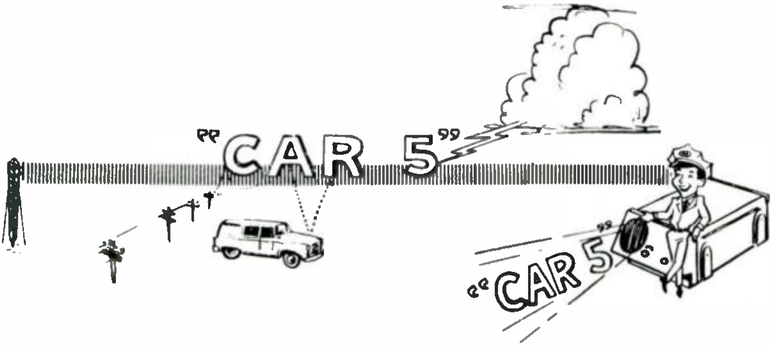

Interference Does Not Affect the Strong Signal. The Large Signal-to-Noise Ratio Yields Noise-Free Reception.

---

[1] See TM 11-668 FM Transmitters and Receivers, page 116; also FM Transmission and Reception, by Rider and Uslan, pages 251-256.

est signal voltage which can be successfully received. It therefore becomes important to have some means of comparing the strength of the signal with that of the noise.

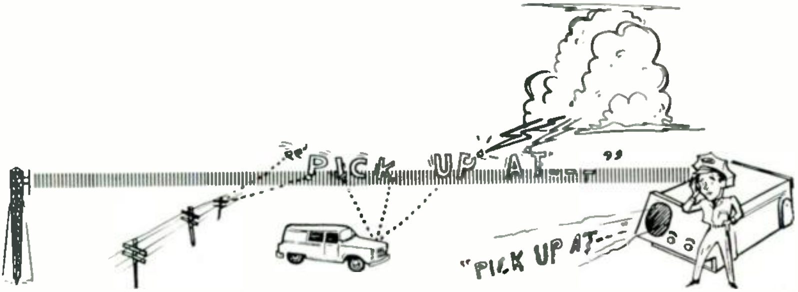

Interference Overrides the Weak Signal. The Small Signal-to-Noise Ratio Results in a "Noisy" Output.

The expression "signal-to-noise ratio," which is usually abbreviated "s/n ratio", is used to compare the strength of the desired signal with the noise voltages present in a particular circuit. The s/n ratio is most important at the input of the receiver, where the signal level is low. Unless the incoming signal voltage is greater than the noise voltages, satisfactory reception usually is not possible. The amount of noise present at the receiver input, together with the noise generated within the RF circuitry, determines the weakest signal that can be received.

Also, while the RF stage itself generates a certain amount of noise, the mixer which follows the RF stage is an even greater offender in this respect. Unless the signal undergoes the required amplification in the RF stage, the relatively high noise level of the mixer will limit the receiver's sensitivity.[2]

Because noise plays such an important part in determining the overall performance of the receiver, let us digress briefly at this point for the purpose of examining the nature of this noise before proceeding further with our discussion of the RF stage.

Noise Sources and Noise Frequencies

Noise may be either external or internal, according to whether it is man-made, natural, or generated within the receiver itself. It may be either impulse noise or random noise according to its waveform, and it may also be classified, to some extent, as to frequency.

Noise may enter the receiver

---

[2] See FM Transmission and Reception, by Rider and Uslan, pages 251, 254-255.

from some external source, in which case it may be either man-made or due to natural causes. Noise may also be internal in origin, since it may be generated within the receiver circuits and their components. Noise, particularly man-made noise, is not distributed uniformly throughout the frequency spectrum. Impulse noise is most bothersome at frequencies from approximately 15 to 160 mc, while random noise is generally considered to cover all frequencies.

First, let us consider man-made noise, after which we shall then proceed to examine natural noise and receiver noise.

Man-Made Noise

Man-made noise falls within the two general classifications mentioned above, (1) impulse noise and (2) random noise. Impulse noise consists of sharp pulses of RF voltage, which produce audible pulses (sound) at the speaker. These noise pulses are often hundreds of times greater in amplitude than the signal and may make it impossible to hear the desired message. The most common source of impulse noise is the ignition system used with gasoline engines. Because two-way radio

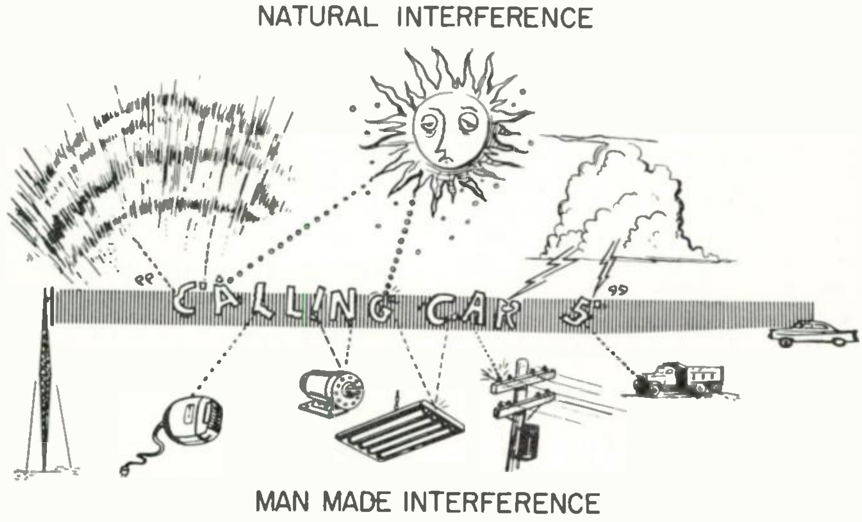

"Interference" in the Radio System Has Many Points of Origin.

is predominantly vehicular, impulse noise is a major problem. Preventive measures are taken to eliminate as much of this noise as possible, but there is always a small component of noise left which may interfere with the reception of weak signals.

The second kind of man-made noise (random noise) is more continuous in nature. It appears as a broad band of many pulses which bear little or no relation to each other. Such noises are produced by rotating electrical machinery, automotive generators and regulators, high-voltage power transmission lines, gas rectifiers and similar devices.

Man-made noises can reach the receiver in several ways. It can be received as a radiated signal along with the desired signal. Or power lines, in the vicinity of the receiver antenna and to which a noise producing device is connected, may induce noise voltages directly into the antenna. Or, in fixed installations where operation is from power lines, noise may enter the receiver directly from these power lines. This is sometimes called "conducted noise".

Natural Noise

Natural noise arising from various sources frequently proves disturbing to radio communications. Such noise may be of either the impulse or the random type. Perhaps the most familiar example of natural noise is that produced by lightning discharge. This type of noise is not entirely due to local storms; it frequently originates in the tropical storm centers and then it is propagated as a radio wave to many parts of the earth. The highest noise levels are usually encountered during our summer months. Fortunately, the intensity of this noise is less above 40 mc, where most two-way communications take place. Some noises are attributed to sun-spots and other natural phenomena. Nothing can be done about natural noises at their sources.[3]

Receiver Noise

In addition to man-made and natural noises entering the receiver from the outside, noises are also generated within the receiver itself. Almost all noises generated within the receiver are of the random type, for they are continuous, have no specific waveform, and cover a wide range of frequencies.

One source of receiver noise is the irregular electron motion within any current passing through a conductor. This erratic motion of electrons causes small variations in the current and a corresponding change in voltage. This is called "fluctuation noise" and has no specific waveform or frequency.

Another source of noise is the normal but haphazard motion of atoms, and molecules, and elec-

---

[3] See TM 11-668 FM Transmitters and Receivers, pages 116-117.

trons. These particles make up all matter. They are always in violent motion and their activity increases with temperature. The resulting noise (designated as "thermal" noise) is present in any circuit containing resistance.

The amount of noise generated in the input circuit of a receiver is determined by the bandwidth and impedance of the circuit. A circuit designed to operate on a wide band of frequencies and having a high impedance generates more noise than a circuit with a narrow band acceptance and a low impedance.

Tubes Are a Source of Receiver "Noise."

Tubes also produce considerable noise due to three distinct actions inside the tube.

1. Electrons leave the cathode at irregular intervals and with random velocity. Their arrival at the plate is also irregular and causes noise pulsations in the plate circuit. This is known as the "shot effect".

2. Electrons leaving the cathode of a pentode or other multi-element tube form separate currents on their way to the plate and screen. This division of the electron stream is a source of noise and is most noticeable in tubes which have a number of positive grids. Such a division of cathode current does not normally take place in triodes, so these tubes are not subject to this effect.

3. Another noise generated within the tube is due to electrons passing close to the control grid on their way to the plate. Small noises are thus induced into the grid circuit and add to other noises present.[4]

Of all tube types, the triode is the "quietest". The sharp cutoff pentode is next best, followed by the remote cutoff pentode and multi-element tubes in that order. Regardless of the tube used, noise may be minimized by establishing a low value of cathode current.

Amplification Requirements

Because the mixer has an inherently high noise level, the signal voltage must be strong when it reaches this stage. (The high noise level at the mixer is due to several factors. First, the oscillator-multiplier section generates noise, and this noise reaches the mixer along with the desired oscillator signal. Second, the mixing of two different frequencies causes added variations in the electron stream within the tube--which in turn means more noise. In addi-

---

[4] See TM 11-668 FM Transmitters and Receivers, pages 118-119; also FM Transmission and Reception, by Rider and Uslan, pages 279-281.

tion, the conversion efficiency of any tube is low compared to the operation of the same tube as an amplifier, and the lower available output voltage at the IF frequency means a relatively low signal-to-noise ratio.) The RF section of the communications receiver must therefore provide the necessary gain in order to establish a satisfactory signal-to-noise ratio at the mixer.

An RF gain of 5 will be sufficient in most cases to produce satisfactory results in a receiver which has a well-designed mixer stage. However, for positive operation under adverse conditions a gain of 8 or 10 is more desirable. At frequencies below 200 mc, a single well-designed stage of RF amplification using a pentode is preferred to two stages of triode amplification, and the pentode will provide about the same amount of gain.

At higher frequencies (above 200 mc), the pentode becomes less satisfactory and at these frequencies triode amplifiers are generally employed. They must be neutralized, however, or used as grounded grid amplifiers; otherwise they will be unstable.

If all noise generated in the RF stage is kept to a minimum and, at the same time, the incoming signal is amplified so that the signal has the best possible s/n ratio when it reaches the mixer, the RF amplifier will have fulfilled one of its important requirements. We must remember, however, the matter of selectivity, and we shall next discuss the selectivity of the RF stage.[5]

Why Selectivity?

A tremendous expansion of the radio industry--two-way mobile communications in particular--has been going on for the last few decades. In the field of two-way communications, this expansion is made evident by the rapid increase in the number of installations, creating the problem of providing ample channels for their use and operation, a problem which must be solved if the threatened congestion is not to become utterly hopeless.

The number of frequencies assigned to two-way mobile communications has (like that of almost all other services) remained

Some Receivers Are Made Up of Subchassis. Here We See an RF and High-Frequency Oscillator Deck.

---

[5] See TM 11-668 FM Transmitters and Receivers, pages 120 and 121; also FM Transmission and Reception, by Rider and Uslan, pages 251-256.

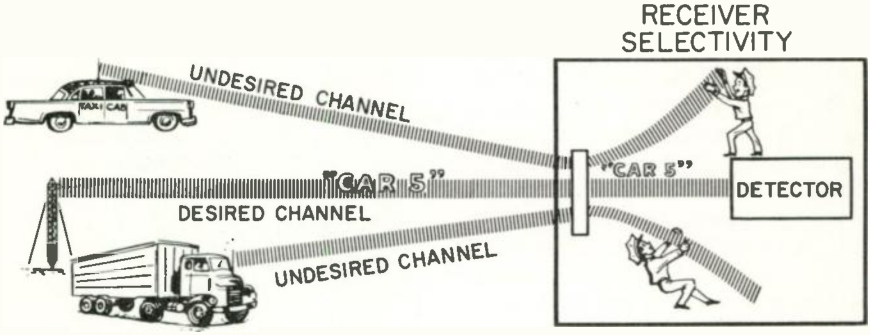

"Undesired Channel" Signals Are Rejected By the Receiver's Tuned Circuits. The "Desired Channel" Signals Are Selected and Reproduced.

unchanged for the last several years. The number of users, on the other hand, has already become so great that competing services are often compelled to share the same operating frequency.

So much for the problem. A partial solution is seen in the possibility that additional channels may be made available in the 900-mc range, but this will not entirely relieve the congestion. The demand for more channels will continue, and it seems that the only immediate answer to the problem is to utilize the presently allocated channels to a greater degree. Receivers must be made more selective.

Communications receivers, prior to 1950, had comparatively poor selectivity. As a result, operating channels were widely spaced, and the intervening frequencies or "in between" channels could not be used without causing interference. Improved circuitry such as the highly selective receiver filter mentioned in the previous lesson made it possible to assign systems to alternate channels in the same area, and even to adjacent channels, but the problem still remained--there were fewer channels than users.

The FCC (Federal Communications Commission), aware of this demand for additional channel allocations, has ruled that the frequency band from 152 to 162 mc shall be converted to "split-channel" operation, the complete change to become effective in 1963. Instead of the present spacing of 60 kc, there will be only 30 kc between channels. By effectively doubling the number of channels, the FCC ruling improves the ratio of channels to users. On the other hand, the problem of "more signals on closer frequencies" is intensified as a result of this ruling.[6]

In order to operate on closer frequency assignments, receivers

---

[6] In more recent rulings, many of the channels in both the high and low bands are being converted to split-channel operation.

(as well as transmitters) must possess excellent frequency stability; transmitter deviation must be carefully controlled, and so must receiver selectivity. Otherwise, narrow-band operation would be impractical. In the case of the receiver RF section, there are two major problems involved in close channel spacing. One of these concerns desensitization; the other, intermodulation. Since both occur in the front end of the receiver, they must both be accorded full consideration here in connection with our study of the RF amplifier stage.

Desensitization and intermodulation are caused by unwanted signals entering the front-end of the receiver. These are not new problems, but they become more serious with additional transmissions on closer frequencies. The design and the operation of the RF section of the receiver thus become increasingly important--incoming signals which could produce desensitization and intermodulation must be rejected. The receiver, in other words, must have sharp RF selectivity.

Desensitization

Desensitization can best be described by means of an example. A police squad car, radio equipped, is cruising in the vicinity of a local taxicab transmitter, operating on an adjacent channel. The strong signal from the transmitter is said to "desensitize" the police radio if it reduces the gain of the receiver. The desensitization may render the police receiver completely inoperative as long as the car is in the neighborhood and while the interfering signal is on the air. Since the desensitizing signal is eventually rejected by the selective filter, it is not heard; the squad car operator may not even know that his receiver has become inoperative! As soon as the car leaves the area, or the interfering signal goes off the air, everything is back to normal.

Desensitization is caused by the interfering signal exceeding the fixed bias on one of the amplifier tubes, with the result that the tube draws grid current on the positive peaks. This increases the bias

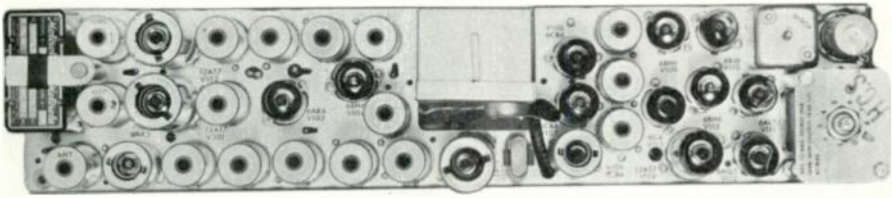

Top View of a Two-Frequency Receiver--See the Two Crystals at the Left. At the Far Right Is the Audio Level Control.

The Underside of a Modern Two-Way Receiver. This Receiver is Completely Transistorized and Has Modular, Printed Board Construction.

on the stage and reduces the gain. Another effect is to "load" the tuned circuits, reducing their "Q" and selectivity as well as the amplification. Desensitization is possible with only one interfering signal--this signal is usually very strong and close to the operating frequency of the receiver.[7]

Intermodulation

Intermodulation is similar to desensitization in that it is an interference due to unwanted signals which enter the receiver. Unlike desensitization however, intermodulation requires two or more signals, which combine to produce a new signal at the channel frequency of the receiver.

Intermodulation, like desensitization, can also be best explained by means of an example. Let us consider a receiver designed to operate at 152.00 mc. Entering the receiver are two unwanted signals of 152.12 and 152.24 mc. These two signals may combine in the mixer to produce a signal of 152.00. Here is how it happens. We know that among the additional frequencies created in the mixer will be the second harmonic of any incoming signal. Now the second harmonic of 152.12 is 304.24 mc, and this frequency combines with the 152.24 signal to produce a difference frequency of 152.00 mc (the operating frequency of the receiver). Any modulation present on either of the incoming signals will modulate the new frequency and be heard in the speaker. Moreover, the deviation of the 152.12 mc signal is doubled in its harmonic, increasing the interference.

The frequencies causing intermodulation are usually close to the center frequency of the receiver, although this is not essential as long as the signals are strong and reach the mixer with sufficient amplitude. Intermodulation may also take place in conjunction with commercial FM transmissions, TV stations, and even standard broadcasts. Intermodulation oc-

---

[7] See "Desensitization" article.

curs only when all signals causing this condition are on the air simultaneously. As a general rule, the percentage of time that all the signals are available simultaneously is fairly small; with commercial broadcasts, however, the carrier is present during the major part of the day and intermodulation effects are more continuous.[8]

Preventing Desensitization and Intermodulation

Strictly speaking, there is no practicable protection against extremely strong signals close to the operating frequency. It is possible to minimize the effects of both desensitization and intermodulation and, in certain instances, to actually eliminate such forms of interference, but the problem still exists as a challenge to efficient two-way communications, especially in the mobile field.

In recent years considerable attention has been given to good receiver design, and AGC (automatic gain control) circuits have proved to be helpful in reducing intermodulation. Great stress has also been placed upon the RF section and its ability to reject unwanted frequencies, for the very nature of desensitization and intermodulation would seem to indicate that a possible solution might be to install highly selective filters ahead of the receiver's RF stage. This would eliminate all except the desired frequency and there would be nothing to produce either desensitization or intermodulation. This procedure is not practicable, however, for two reasons. First, a sharp selectivity can be had only at the lower frequencies. At the RF frequency, it is impossible to achieve the necessary selectivity with practical tuning devices so far developed. Second, since all components have some internal losses, any tuned circuit will contribute a certain amount of attenuation, even to the desired signal. In order to achieve a reasonable degree of selectivity, numerous tuned circuits would be required and the signal attenuated to a very low level--too low to compete with the receiver noises. Such a receiver would have a poor signal-to-noise ratio on most signals and only strong signals would be heard satisfactorily.

At fixed installations, it has been possible to reject most unwanted signals by placing large but very efficient "cavities" in series with the receiver antenna leads. These cavities have a very high Q and are tuned to the frequency of the desired signal. Acting like a par-

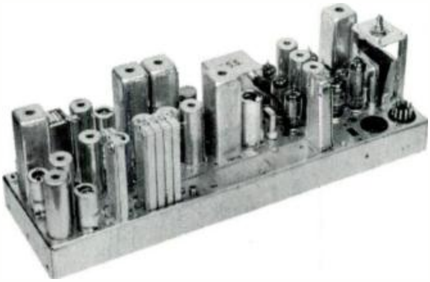

A 450-MC Receiver Chassis, the Rectangular Units (Left Front) Are the 450-MC, Cavity-Type Tuned Circuits.

---

[8] See "Intermodulation" article.

Low-Band Cavity Resonator.

allel tuned circuit across the receiver input, these cavities prevent voltages at the interfering frequencies from reaching the receiver. The attenuation to the interference is very effective, but there is little loss at the operating channel. If necessary, two or more cavities may be used in series.[9]

In the case of mobile installations, the most logical solution lies in system design. One of the most effective factors is the careful selection of operating frequencies for the various services in a given locality. The FCC has jurisdiction over channel allocations and this body is very cooperative in assigning frequencies so as to avoid interference. (System engineers are competent to suggest proper frequency assignments to minimize intermodulation and desensitization.) Another factor in system design is the relocation of stationary antennas away from the immediate service area of all mobile units; most of the really serious interference is thereby eliminated.

The RF Input Circuit--Impedance Matching

It is common to call the circuit between the antenna transmission line and the RF grid the "input circuit". This circuit has two basic functions. First, being a tuned circuit, it must provide some selectivity. Second, in order to transfer maximum energy (signal) from the transmission line to the RF grid, it must "match" the impedances of these circuits.

The antenna input or transmission line usually has an impedance of 50 ohms at the channel frequency. Thus, as far as the transmission line is concerned, the input circuit must look like 50 ohms. This circuit forms a parallel tuned tank between the grid and ground, and a parallel tuned circuit usually has a high impedance.

An impedance match may be effected by several methods. One of the most common makes use of a transformer in which the primary winding impedance matches that of the input, while the secondary impedance is that required in the

[9] See "Cavity Resonator" article.

RF grid. Another method of impedance match is to use a single coil, but to connect the input to a low-impedance tap on the winding.

The Motorola circuit of figure 1 employs still another approach to the problem of impedance matching. Here the input is connected or "tapped" between two series-connected capacitors, which themselves are a part of the grid tank-circuit. This arrangement allows a step-up of voltage and impedance in the same manner as if a tapped coil were used. The value of the input capacitor is selected so that at the operating frequency its impedance is about 50 ohms; thus, the receiver input is 50 ohms. (Sometimes a slight mismatch is introduced in order to obtain an improved s/n ratio.)

The grid circuit sees a parallel tuned circuit between grid and ground, and this offers the required high impedance. For figure 1 the step-up in voltage from the antenna input to the grid is about 5 times, which means a corresponding improvement in the s/n ratio. (While the signal at the resonant frequency is built up 5 times, the noise generated remains unchanged.)[10]

The RF Amplifier Output Circuit

The plate circuit of figure 1 is rather unusual in that it makes use of three highly efficient tuned circuits. Furthermore, these tuned circuits are "critically" coupled to provide maximum gain and optimum frequency selection. Whenever several tuned circuits are used, the coupling between them greatly affects both the selectivity and the amount of signal voltage at the output. With transformers, the interaction of the coils (mutual induction) determines the amount of coupling. For the plate circuit of figure 1, the degree of coupling is determined by the value of the capacitors between the tuned circuits.

With a small degree of coupling, tuned circuits react at their natural resonant frequency and the selectivity is very good. As the coupling is increased, the output voltage continues to increase up to a certain point (called "critical coupling") beyond which there is no

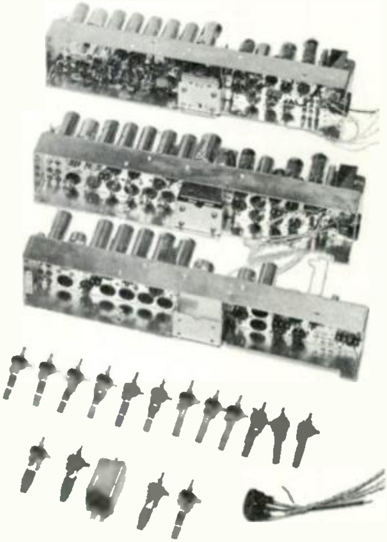

Here We Find Some of the Individual Parts Used in Receiver Construction; Starting at the Bottom, We See Several Steps of Assembly.

---

[10] See TM 11-668 FM Transmitters and Receivers, pages 119-120.

further increase in output voltage. Increasing coupling up to the point of "critical coupling" increases the bandwidth a small amount. Beyond critical coupling, however, the bandwidth increases rapidly. This is called "overcoupling" and causes poor selectivity. In addition, the output voltage will be lower than the maximum value established at critical coupling. Thus, it is important to employ critically-coupled circuits in order to obtain good selectivity and sensitivity.[11]

In addition to critical coupling it is important to use circuits having a high Q, for this determines their ability to reject unwanted signals. High-Q circuits afford much better selectivity than those with a lower Q. At higher frequencies, such as found in communications receivers, the Q of the coil and the degree of loading determine the Q of the tuned circuit. The Q of a coil is the ratio of its reactance to its resistance. (As a formula, $Q=2\pi FL \div R$, where R is the resistance to high-frequency current traveling on the surface of the conductor.) The coils of many Motorola receivers are made from silver plated "ribbons" having a large surface area. This reduces the "R" and produces a high Q. The three critically-coupled high-Q tuned circuits in the RF stage of figure 1 provide excellent selectivity, rejecting the image frequency as well as many other signals that might cause interference. At this frequency it is impossible to reject all signals on the neighboring channels, but these are eliminated by the selective filter in the last IF section.

The RF Stage As A Class Amplifier

When it is necessary to secure good amplification with a minimum of distortion we use class A amplification. The signal voltage in a class A amplifier must not drive the grid positive with respect to the cathode, causing grid current. The tube is operated as near as possible to the center of the straight portion of its characteristic curve. A typical class A amplifier is shown in figure 2. Plate current is plotted on the vertical axis and grid voltage on the horizontal axis. The tube bias should be at the center, marked "X" on the curve. The incoming signal to the RF grid, at the bottom of the figure, varies the total grid voltage and operates the tube between points A and B on the curve. Plate current varies between A and B . If the operation is linear the output waveform is an exact duplication of the RF grid voltage. The amplitude of the signal in the plate circuit will be several times greater than the input, the exact amount depending upon the gain of the stage.

The gain of the stage in turn depends upon the grid bias. In figure 3 the bias has been increased so that the tube operates near the lower part of the curve. The value or amount of signal voltage to the grid is the same as in figure 2, but the amount of plate current change is less, which means that the sig-

---

[11] Coupling is discussed in greater detail in a later lesson.

nal voltage in the plate circuit is reduced. Automatic gain control circuits make use of this reduction in gain when the bias of a stage is increased. The grid circuit is returned to some source of negative voltage which varies with the signal level, and in this manner the gain of the stage changes (inversely) with the strength of the incoming signal. Let's look at this circuit a little more in detail.

Automatic Gain Control

Automatic Gain Control, or "AGC" as it is usually called, lowers the amplification or gain of the RF stage when a strong signal is received. Several advantages result from this action. First, the signal at the receiver is normally higher than the minimum value necessary to operate the receiver. By reducing the RF gain on strong signals, interfering signals receive less amplification. As a result, these undesirable voltages have a lower amplitude at the mixer, and are less likely to cause intermodulation. Even with decreased amplification, the desired signal voltage has sufficient amplitude to produce a good noise-free output at the speaker.

The AGC circuit (omitted from figure 1) is shown in figure 4. Disregard at this time the connection to the screen of the IF amplifier, and consider the rest of the circuit. The AGC controlling voltage is secured from the grid of a limiter tube. The grid of the limiter constitutes a rectifier circuit for the applied signal, producing a negative voltage having an amplitude which is directly proportional to the strength of the signal at the limiter grid. A filter (R and C of figure 4) eliminates any RF pulses in the AGC control line, and a steady DC potential is thus applied to the RF grid. The time constant of this filter prevents sudden changes of signal voltage from reaching the RF grid.

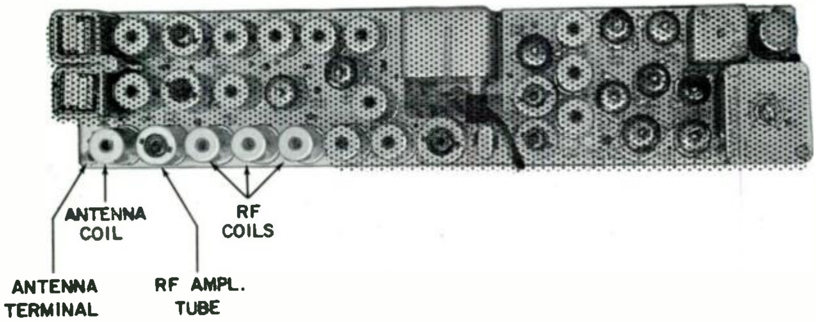

A "Parts Location" Type of Photo Used in Service Manuals. Only Those Components of the RF Section Are Identified.

When a strong signal reaches the receiver, the voltage at the limiter is high and causes a relatively large negative voltage at the limiter grid. This negative voltage is applied to the grid of the RF amplifier as additional bias and reduces the stage gain. A weak signal produces less voltage at the limiter grid and a smaller AGC bias is applied to the RF grid.

There is one undesirable feature inherent in this system. Even a weak signal entering the receiver will cause some negative limiter grid voltage, and the resulting AGC voltage at the RF grid will reduce the gain for this weak signal. Obviously this is unsatisfactory, for it reduces the sensitivity of the receiver on weak inputs.[12]

Delayed AGC

Let us now return to figure 4 and consider the portion which was disregarded in the preceding paragraph (the connection to the screen of the IF amplifier). To avoid the reduction of RF gain by AGC action on weak signals a system called "delayed AGC" is employed. The delaying voltage is obtained by introducing a small positive potential from the screen of an IF amplifier stage into the AGC control line. Due to "Edison Effect" (produced by the small grid current through the large grid resistor) the grid of the RF stage does not become positive but remains slightly negative.

With this arrangement, the AGC line will no longer become negative for weak signals entering the receiver; the negative voltage at the limiter grid must first overcome the positive voltage of the AGC line. When the signal reaches a certain level, the increased bias voltage at the limiter grid makes the AGC line negative. Any signal with this minimum amplitude (or greater) will cause AGC action. Thus we use the term "delayed" AGC, since AGC operation is delayed until the signal has attained a certain level. With delayed AGC, the receiver operates at maximum gain on weak signals, but still provides AGC action on strong signals and greatly improves the receiver's freedom from intermodulation.

Oscillator Radiation

The local oscillator is in reality a small transmitter, and unless it is well isolated from the antenna, considerable oscillator energy may be radiated into space. This additional "signal" is quite capable of interfering with the operation of other receivers in the area.[13]

The RF stage isolates the antenna from the oscillator. Without the RF stage, the antenna would be coupled into the mixer, and it would be relatively easy for the oscillator voltage to feed into the antenna and radiate into space. The RF stage separates the oscillator and the antenna so that less energy from the oscillator reaches the antenna. With good shielding between the circuit components and with good grounding to minimize ground

---

[12] See TM 11-668 FM Transmitters and Receivers, page 127; also FM Transmission and Reception, by Rider and Uslan, pages 288-290.

[13] See TM 11-668 FM Transmitters and Receivers, pages 132 and 133.

currents, the oscillator energy must feed from the grid of the mixer through the coupling circuits to the plate of the RF stage, through the tube capacitance to the grid and on through to the antenna. This path allows only a very small amount of energy to get through--far below the maximum amount permitted by the FCC.

Summary

The amount of noise at the grid of the RF stage determines the weakest signal that may be successfully reproduced. Unless the RF stage provides enough amplification, the signal cannot compete with the high noise generated by the mixer. In addition to the noises entering the receiver, noises are generated in the circuits and tubes of each stage.

The RF stage must provide some amplification of the desired signal and afford optimum selectivity; at the same time, the noise generated internally must be kept to a minimum.

The input circuit must provide an impedance match between the antenna system and the grid circuit of the RF amplifier. This is accomplished by means of a transformer or a tap on the tuned circuit.

With the increase of channel assignments in metropolitan areas the problems of intermodulation and desensitization have become serious. In an effort to eliminate all unwanted signals, the RF stage uses critically coupled, high Q tuned circuits. Also, by employing delayed AGC, weak signals receive full amplification but stronger signals encounter reduced RF gain. This limits the amplitude of unwanted signals reaching the mixer.

Thought should be given to intermodulation and desensitization when making frequency assignments and locating antennas. Large, high-Q cavities, tuned to the desired channel, may be used in the transmission line at stationary receiver installations to minimize these effects.

IMPORTANT WORDS USED IN THIS LESSON

AUTOMATIC GAIN CONTROL: A method of controlling the overall amplification of a receiver by varying the gain of one or more stages, inversely with the strength of the incoming signal. When used with two-way FM receivers, AGC is highly effective in reducing intermodulation.

CAVITY: A device having a very high Q, used to reject unwanted energy at frequencies close to the operating frequency of the system. Used in the antenna lead of the receiver, cavities prevent intermodulation and desensitization.

DELAYED AGC: An AGC system in which weak signals are prevented from producing any AGC action. This allows the receiver to operate at full sensitivity for weak signal inputs.

DESENSITIZATION: This is the reduction in gain of one or more stages of a receiver, caused by a strong unwanted signal exceeding the established bias on that stage.

IMPULSE NOISE: Those noise voltages which have very sharp peak amplitudes and which occur at irregular intervals. The most common source of impulse noise is the ignition system used with gasoline engines.

INSERTION LOSS: The attenuation of the desired signal by some circuit element, such as a tuned circuit or filter.

INTERMODULATION: A type of interference, evidenced in receivers, whereby two or more unwanted signals combine to create a new frequency corresponding to the channel frequency of the receiver.

NOISE: As used in the electronics industry, noise refers to spontaneous and irregular variations in voltages and currents. Noise voltages are characterized by the absence of uniformity in both waveform and frequency. When such noise voltages are reproduced by a speaker, the resulting sound is equally irregular and is thus "noise".

RANDOM NOISE: This noise is more continuous in nature and has a more uniform amplitude (compared to impulse noise). Nearly all noise is of the random type.

SIGNAL-TO-NOISE RATIO: A comparison of the amplitude of the desired signal to the amplitude of the noise voltage present.

STUDENT NOTES

STUDENT NOTES

STUDENT NOTES

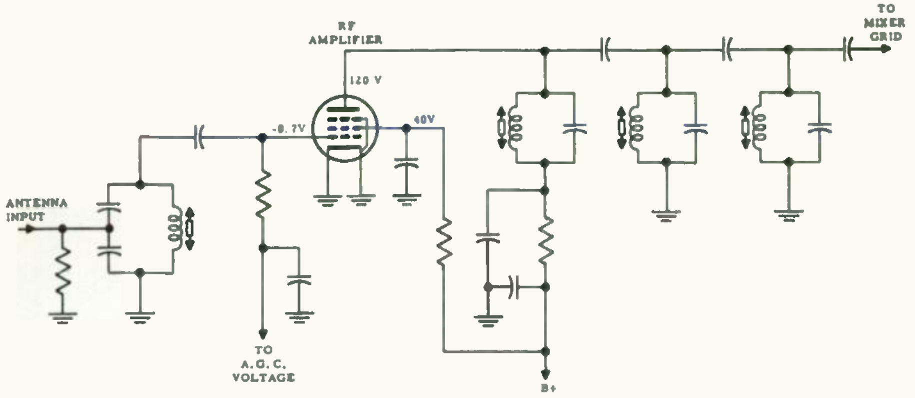

FIGURE 1

RECEIVER RF STAGE

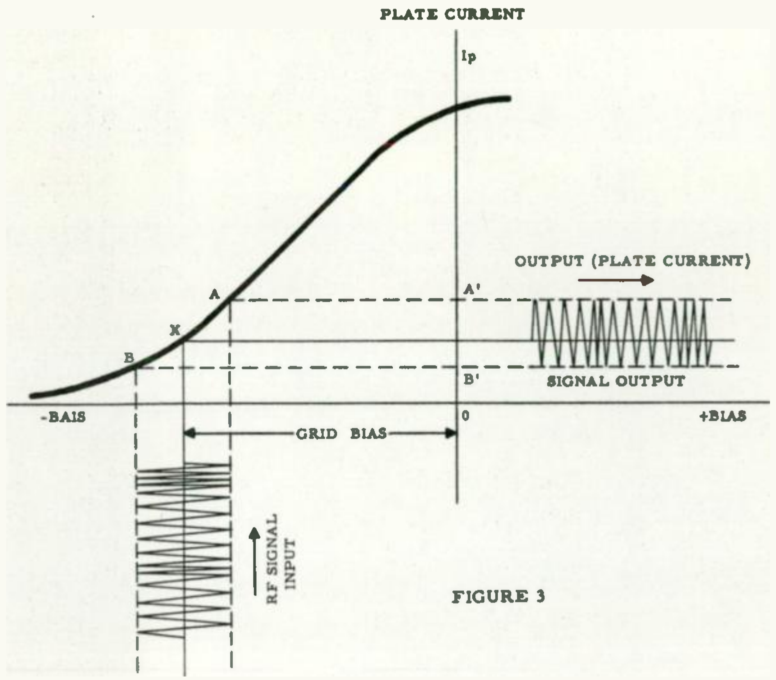

FIGURE 3

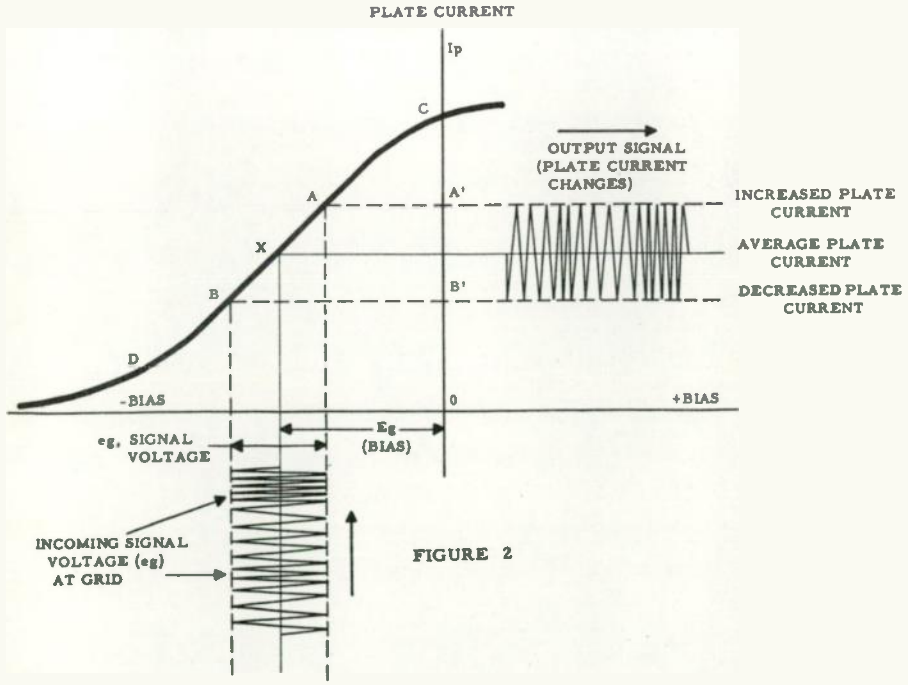

FIGURE 2

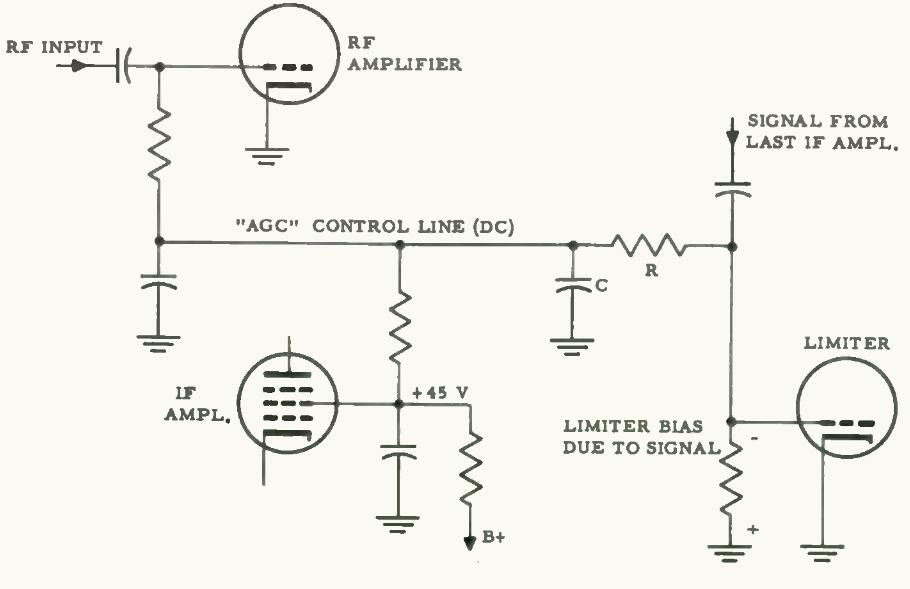

DELAYED AGC CIRCUIT
FIGURE 4

Motorola Training Institute

4501 West Augusta Blvd., Chicago 51, Ill.

Please PRINT or use STAMP.

Name ______________________________ **Student No.** ______

Street __________________ **Zone** ____ **Date** ______

City _______________ **State** ________ **Grade** ______

Examination, Lesson RA-3

1. What is the purpose of the RF stage in the FM Communications receiver? (Check <u>any</u> and <u>all</u> correct answers.)

   A. To improve the overall signal-to-noise ratio. A.__________
   B. To increase the RF selectivity. B.__________
   C. To override mixer noise. C.__________
   D. To reduce the amount of noise generated in the receiver. D.__________

2. Indicate the order of the following tubes with respect to their internal noise generation, placing the least noisy first.

   Heptode __________ Remote cutoff pentode __________
   Triode __________ Sharp cutoff pentode __________

3. If a strong interfering signal reduces the gain of a receiver, the action is known as __________.

4. A receiver is designed to operate at 141.8 mc. One interfering signal coming into the receiver is 141.52 mc. What additional frequency is needed to cause intermodulation?

   A. 142.14 mc. C. 142.0 mc.
   B. 141.68 mc. D. 141.24 mc. ANS.__________

5. Which of the following may reduce the effects of intermodulation and densitization?

   A. Change the frequency of the receiver being interfered with. A.__________
   B. Change the frequency of any interfering signals. B.__________
   C. Relocate the antennas of the interfering transmitters. C.__________
   D. Use high-Q cavities parallel to the input of the receiver input, tuning them to the frequency of the interfering signals. D.__________

6. In addition to the impedance transformation taking place in the input circuit of the receiver, between the antenna and the grid of the RF amplifier, the input circuit provides a step up of the signal voltage and improves the signal-to-noise ratio. TRUE__________ FALSE__________

7. In order to provide good selectivity with maximum gain, tuned circuits:

   A. Should be overcoupled. A.__________
   B. Have a high Q. B.__________
   C. Must be critically coupled. C.__________
   D. Must have a low Q. D.__________

8. Indicate the <u>incorrect</u> statement about the Q of a tuned circuit.

   A. Q indicates the ability of a circuit to reject unwanted freq. A.__________
   B. The Q of a circuit increases with an increase of resistance. B.__________
   C. In high-frequency applications, the Q of a circuit is determined mainly by the Q of the coil. C.__________
   D. A high Q provides good selectivity. D.__________

9. Underline the <u>correct</u> words in the following statements.

   The RF amplifier is operated in class A to provide (maximum)(minimum) gain and (maximum)(minimum) distortion. The (pentode)(triode) tube gives more gain, but has (more)(less) noise. It is desirable to have a (low)(medium)(high) signal-to-noise ratio from the RF stage.

10. "Delayed" AGC action in a receiver is used to: (check all correct answers)

   A. Maintain maximum receiver selectivity at all times. A.__________
   B. Keep maximum sensitivity for all signals. B.__________
   C. Prevent the AGC action from taking place for a short time after a strong signal enters the receiver. C.__________
   D. Reduce the RF gain only on strong signals. D.__________
   E. Reduce intermodulation. E.__________
   F. Keep the overall amplification at maximum for weak signals. F.__________

national

MOTOROLA
RADIO COMMUNICATIONS

service

A TWO-WAY RADIO COMMUNICATIONS TRAINING PROGRAM

LESSON RA-4
FM RECEIVERS

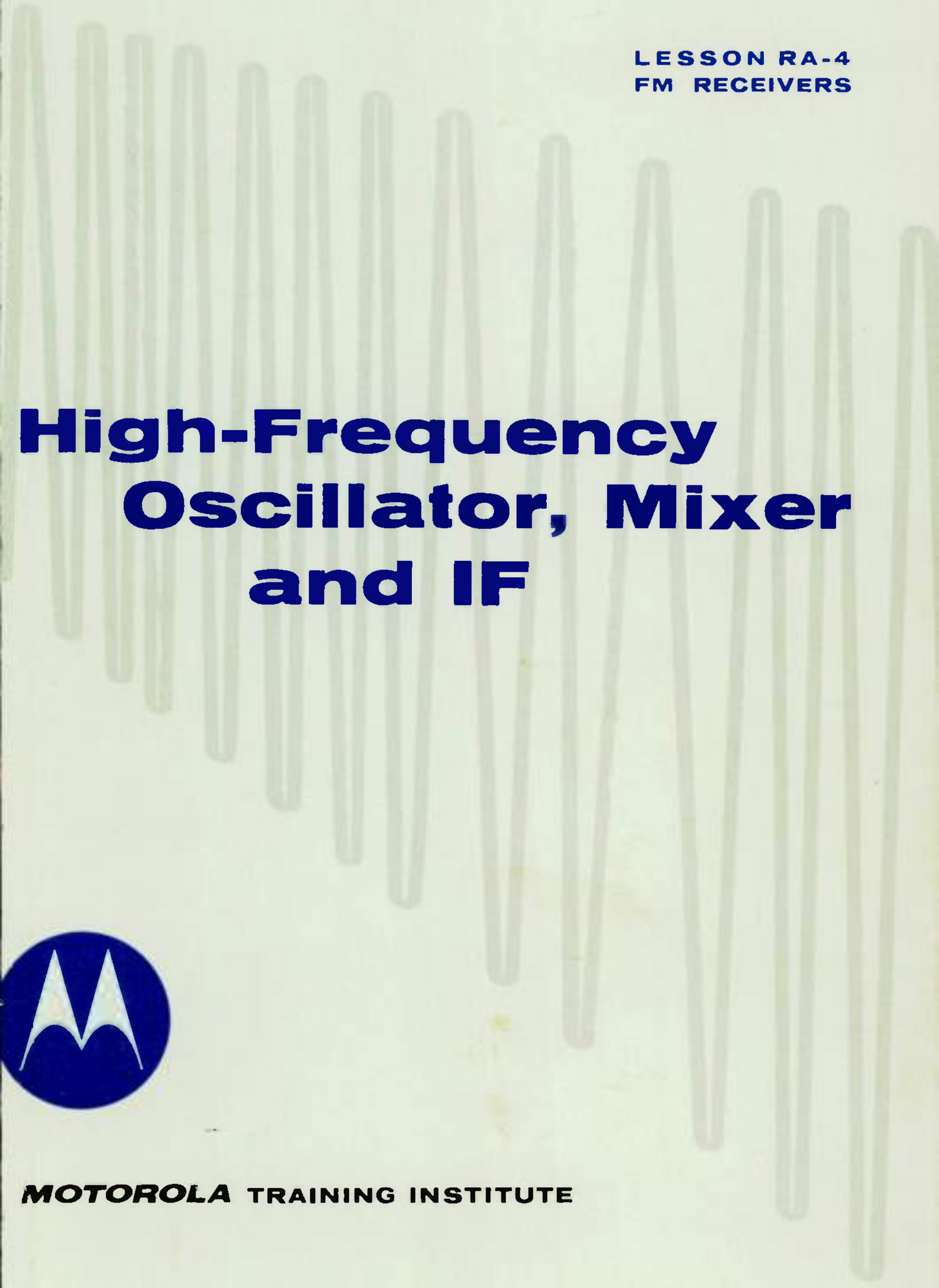

High-Frequency Oscillator, Mixer and IF

MOTOROLA TRAINING INSTITUTE

A TWO-WAY RADIO COMMUNICATIONS TRAINING PROGRAM

LESSON RA-4
FM RECEIVERS

High-Frequency Oscillator, Mixer and IF

—one of a series of lessons on two-way FM communications—

MOTOROLA TRAINING INSTITUTE
4501 W. AUGUSTA BLVD., CHICAGO 51, ILLINOIS
APPROVED BY THE STATE OF ILLINOIS
DEPT. OF REGISTRATION AND EDUCATION

PREFACE

This is one lesson of a complete Motorola Home-Study Course which presents to the Service Technician both the principles of operation and the maintenance of two-way FM radio systems. The program covers mobile, portable and base station equipment, including the latest transistorized units.

THE HIGH FREQUENCY OSCILLATOR - MIXER AND FIRST IF AMPLIFIER

LESSON RA-4

TABLE OF CONTENTS

NOTICE

NOTICE

Diagrams and figures referenced in text are "fold-outs" in back of each lesson, for use while studying. The Examinations are also there.

Providing "Handie-Talkie" pocket size Two-Way Radio transmitters and receivers for the foot patrolman or officer on the beat has been one of the most significant advances in police radio since mobile radio was first placed in police cars. Now any officer on the force can be constantly in touch with patrol cars or headquarters, for orders, for requests for assistance, for stake-outs and for coordinated searches or enforcement activities.

THE HIGH FREQUENCY OSCILLATOR, MIXER AND FIRST IF AMPLIFIER

Lesson RA-4

Introduction

Figure 1 shows in block form, that portion of a communication receiver usually referred to as the "front end." This includes the RF amplifier, the oscillator-multiplier, the mixer and the first IF amplifiers stages.

The purpose of the front end of a communications receiver is to provide an output signal which (1) has good amplitude with a minimum of noise, (2) is relatively free from all spurious responses such as image frequency and intermodulation, and (3) has a constant center frequency of 12 mc in this example. (The first IF frequency may be different in other model receivers. Figure 1 follows the block diagram discussion of the preceding lesson). To meet these requirements, the RF and IF stages must provide the required amplification with excellent selectivity, and the oscillator must be extremely stable.

Since the RF amplifier was discussed in the preceding lesson, this assignment will be confined to the remaining front-end stages. The oscillator and mixer of figure 1 convert the RF signal to a 12-mc IF. (The oscillator is crystal controlled to maintain the IF at 12 mc). The necessary rejection of unwanted signals is realized by using six highly-efficient tuned circuits at the IF frequency. While the mixer has low gain, the IF amplifier affords the amplification necessary (1) to compensate for the insertion loss in the selective (Permakay) filter following the second mixer and (2) provide some reserve gain for this portion of the receiver. Let us now proceed with a more detailed discussion of these several stages.

The High-Frequency Oscillator

The basic function of any oscillator is to change DC energy from a power supply into AC energy at a specific frequency. Many types of oscillators have been developed to meet a variety of requirements. The most important of these requirements, insofar as the communications receiver is concerned, is stability. The Colpitts type oscillator, which also can be readily adapted to crystal control, appears to be the most popular in this respect.

Before studying the more complicated crystal-controlled oscillators actually used in communications receivers let us review the operation of the basic Colpitts circuit. In figure 2 some of the output energy, present in the cathode circuit, is fed to the grid circuit, in order to maintain the oscillating current in the tank circuit (composed of L1, C1 and C2).

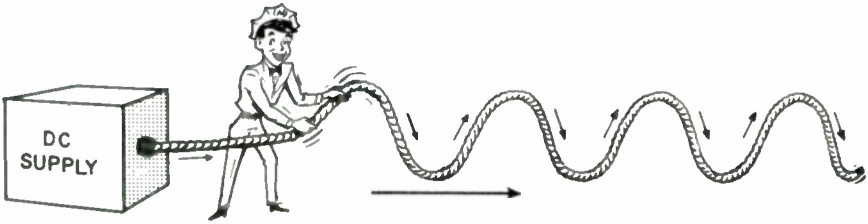

An Oscillator Changes the DC Energy from a Power Supply into AC Energy.

Like most oscillators, the stage is operated in class C. During a small portion of each RF voltage cycle in the tank, the grid is made positive with respect to the cathode, and C3 is charged. During the remainder of the cycle this capacitor must discharge through R1, but because of the high resistance of R1 only a small amount of charge is lost and a relatively high biasing voltage is maintained across C3.

Also, during the positive portion of each RF cycle the grid is unbiased to allow a short pulse of plate current. This pulse of current appears in the cathode coil L2. Tank capacitor C2 receives some energy or charge from the cathode current pulse through coupling capacitor C4; this feedback energy is "in phase" with the circulating tank current and compensates for the losses in the grid circuit, thereby maintaining the oscillating current in the tank circuit at a constant level. That is, the RF grid voltage has a constant amplitude from one cycle to the next.

In order to satisfy the rather stringent frequency control requirements, the modern communications receiver must employ crystal-controlled oscillators. The state of the art has not progressed to the point where it is practical to use a crystal-controlled oscillator at 160 mc, which is the local oscillator frequency required in figure 1. Therefor, a lower frequency oscillator is used, with a frequency multiplier arrangement supplying an output at a harmonic of the basic frequency. In figure 1, the oscillator frequency is 32 mc, and the 5th harmonic (160 mc) is selected and applied to the mixer.

Class C operation is essential for the generation of harmonic energy, particularly where a higher order of harmonic (such as the fifth) is desired. Because of the very short pulse of plate current and a distorted grid voltage waveform (the result of grid current), the plate circuit contains a relatively high harmonic content. All that is required now is a highly efficient tuned circuit at the frequency of the desired harmonic. (The output voltage at any harmonic frequency will be directly proportional to the impedance offered to that frequency by the plate tank.)

In figure 3 the oscillating section, composed of the grid and cathode circuits, is the same as in figure 2. Oscillation also takes place in the same manner as in figure 2. Instead of the plate of the tube acting as the anode for the oscillator, however, the screen grid has this function in figure 3. The screen grid does not offer any impedance or opposition to AC, but its positive voltage establishes the required cathode current. Maintaining the anode (screen) at a constant DC voltage improves the frequency stability of the oscillator.

The screen grid voltage of figure 3 is kept constant by the screen-grid bypass capacitor. Furthermore, with the screen at a constant DC potential, the reactance between the plate circuit and the grid circuit is minimum. The only "connection" between these circuits is the common electron stream through the tube. This arrangement is then a form of electron - coupled oscillator. Therefore, any change of impedance in the plate circuit, such as tuning, has a minimum effect upon the oscillator frequency. This contributes greatly toward the ultimate stability of the circuit.

The plate tank is a high-Q circuit, tuned to the desired harmonic. This tank must offer a very high impedance at the chosen harmonic frequency in order to establish a reasonable voltage at the output (mixer). In addition, the impedance of the plate tank must be minimum at all other harmonic frequencies; otherwise, voltages at these frequencies will reach the mixer and may cause spurious response.[1]

Even though the electron-coupled, Colpitts oscillator (figure 3) is relatively stable, it is not satisfactory for communications equipment. The only known practical answer to the required high degree of stability is the crystal controlled oscillator. This is often a modification of the basic circuit just described. Before going ahead, however, it is well that we first take a look at the characteristics and operation of crystals.

Quartz Crystals

Certain crystalline materials such as quartz, tourmaline and Rochelle Salts have a most interesting property. If one of these substances is distorted mechanically, an electric charge is developed. Conversely, when the crystal is placed in an electric field it will be distorted mechanically. This property is known as the

---

1. See TM 11-662 Theory and Applications of Electron Tubes, pages 159-162; also TM 11-668 FM Transmitters and Receivers, pages 141-142; also FM Transmission and Reception, by Rider and Uslan, pages 256-262.

Piezoelectric Effect. Of the many substances which exhibit Piezoelectric properties, quartz is the most satisfactory for frequency control purposes. Rochelle Salts has a very intense activity but is too unstable both physically and electrically. Tourmaline is a rare gem material. In addition to being costly, its frequency stability is not comparable to that of quartz.

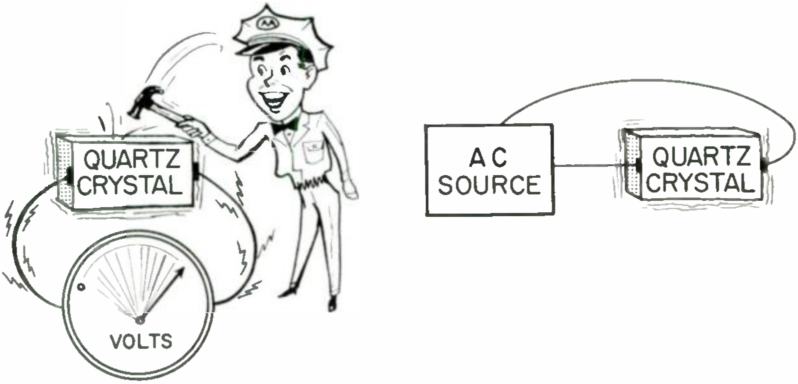

Mechanical Vibration of a Quartz Crystal Produces a Voltage Across that Crystal. In an Oscillator the Crystal is Self Excited by an AC Voltage of the Crystal Resonant Frequency.

While quartz is found in many parts of the world, the most suitable in any quantity comes from Brazil. Quartz is a silica product and is very hard. Besides its use for frequency control in electronic equipment it is used in lenses, balance weights, chemical wares and abrasives. Only crystals of high purity can be used in electronic equipment.

Small "plates" are cut from the raw crystals, and they must be cut in certain directions with respect to the axes of the crystals; they must also be free from mechanical and electric flaws.

If a crystal is placed in an oscillating electric field it will vibrate mechanically and produce a voltage across its faces at the frequency of the applied voltage. The magnitude of this voltage is very small unless the frequency applied corresponds to the natural vibrating period of the plate. At this natural vibrating frequency the voltage developed across the crystal is considerable. In fact, a strong electric field may cause vibrations sufficient to rupture or fracture the crystal.

The electrical action of quartz crystals may be analyzed by referring to figure 5, which shows an equivalent electrical network. The inductance (L) represents the crystal mass, the capacitance (C) the resilience (elasticity), and the resistance (R) represents the frictional losses. C1 is the shunt capacitance due to the crystal electrodes, with the crystal acting as the dielectric. C2 is the series capacitance between the crystal and its electrodes.

At the frequency where the reactances of C and L are equal, the circuit becomes series resonant. This represents the natural frequency of the crystal. At some slightly higher frequency the combined reactance of C and L will be inductive and numerically equal to the reactance of C1. This is the parallel or antiresonant frequency. C2 is effective only when the crystal electrodes are not in contact with the crystal faces.

The value of the inductance (L) is very large and its reactance is many times greater than the resistance (R). This results in a very high Q. The average for commercial crystals ranges from 6000 to 60,000 and even higher. In an oscillator operating at radio frequencies, the frequency stability is dependent upon the Q of the frequency determining tank or tuned circuit.

The operating frequency of an oscillator is that frequency producing a net zero reactance of all the circuit components. Any circuit changes caused by varying voltages or aging of the tubes necessitates a frequency change to keep the reactance at zero. Because of the high Q and steep resonance curve of a crystal, a minor change of frequency results in a comparatively large change of reactance in order to maintain oscillation. Thus, the change of the crystal oscillator frequency to adjust for circuit variations is extremely small.[2]

The Resonant Crystal

In some oscillator circuits the crystal usually operates as a parallel resonant circuit, and these crystals are calibrated at their parallel resonant frequency. The effective value of capacitance C1 of figure 5 changes when a crystal is placed in a vacuum tube oscillating circuit. C1 will be affected by the dynamic input impedance of the tube and by the capacitance of the leads to the crystal. Because of these factors the operating frequency of a crystal will vary with the circuitry of each oscillator. This suggests the possibility of variable frequency control of the crystal oscillator and becomes most useful in compensating for normal frequency changes which occur in the oscillator.

Warping

All crystals will change in frequency due to a natural "aging" of the crystal. (Recent advancement in crystal techniques, however, have reduced this effect to a very minimum.) There are also minor variations due to circuit changes. Regardless of how or why a fre-

---

2. See TM 11-662 Theory and Applications of Electron Tubes, page 162

quency change takes place, it is undesirable and may render the receiver inoperative. Assuming the frequency drift is small (and it usually is), it is possible to bring the oscillator back on frequency by varying a small capacitance in series or in parallel with the crystal. This changing of the oscillator frequency by a variable capacitor (or coil) is called "warping".

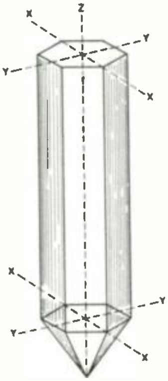

This Sketch Shows the Three Basic Axes of a Quartz Crystal.

The amount of warping provided in a circuit depends upon the requirements of the receiver and the probable shift of the oscillator frequency at the mixer. If a receiver uses an oscillator-multiplier operating at the fifth harmonic, the change of frequency is five times greater at the mixer than at the oscillator section. As an example, in figure 1 a change of 2 kc at the oscillator frequency produces a 10-kc change in the mixer signal, which, in turn, allows a 10-kc shift in the 12-mc IF.

Quartz Crystal Temperature Coefficient

The natural frequency of a crystal is influenced to an appreciable degree by the temperature at which it is operated. The extent and character of this temperature effect is determined by the manner in which the crystal is cut from the natural quartz, the shape and size of the crystal, the precision in grinding the crystal and the characteristics of the crystal itself. The frequency change is expressed in the number of cycle changes per million cycles of crystal frequency per degree centigrade variation in temperature. This change is in cycles per second and is termed the temperature coefficient of frequency.

A positive coefficient means that the crystal frequency increases with an increase in temperature and a negative coefficient indicates a frequency decrease with a increase of temperature. "Zero" temperature coefficient crystals have a relatively small change of frequency with temperature changes, being positive at some temperatures and negative at others. Thus, for the highest degree of frequency stability in a crystal oscillator, it is necessary to keep the crystal at a constant temperature.

Modes of Crystal Vibration

While some crystal oscillators operate on the fundamental crystal frequency and the crystal acts as a parallel resonant circuit, there are other arrangements which utilize the series operation of a crystal. One popular oscillator is the series mode type in which the crystal vibrates at approximately the third harmonic of the fundamental frequency.

Figure 6 illustrates vibration of a crystal plate at its fundamental frequency and at the third harmonic frequency. An interesting fact in connection with this series mode of vibration is that the harmonic frequency may be as much as 50 kc away from three times the fundamental oscillating frequency of the plate. This is due to the difference in the manner (or mode) of vibration and is not constant for all crystals.

Newer crystal techniques now allow series mode vibration at the fifth, seventh and other odd harmonics of the fundamental frequency. This means that oscillators which operate at the required local oscillator frequency are possible in the low-frequency band, 24 to 54 mc. This eliminates the need for the multiplier circuit in the receiver oscillator section.

Low temperature coefficient crystals have been developed for all normal frequency ranges. These crystals operate in "shear" (figure 6) and have excellent frequency stability for temperature changes. "Shear" vibration means that the outer faces of the crystal move in opposite direction while the center of the crystal remains relatively constant (on fundamental frequency only). Above 16 or 17 mc, fundamental low-drift plates become quite thin and fragile, but the upper frequency range is extended by using lower frequency crystal plates and grinding them so that they will oscillate at their third or fifth harmonic. For this type of operation the crystal must be used in a circuit designed for series-mode operation.

To meet the rigid requirements of modern communications practice, crystal oscillators using temperature-controlled heating ovens may have an accuracy of .0005 percent. Comparing this with time, a clock having the same accuracy will vary about one minute

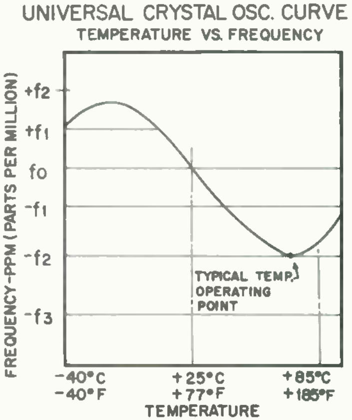

This Curve Shows the Change of Crystal Oscillator Frequency with Changes of Temperature. A Constant Operating Temperature is Maintained by a Thermostatically Controlled Oven.

in three or four months. Compared with distance, this is an accuracy to within one inch in every two miles. To insure positive operation in "split channel" applications, practical oscillators of even greater stability have been developed.

Aging in Crystals

We previously spoke of the aging of a crystal. This refers to a natural change of frequency that takes place over a period of time. All crystals age to some degree, and this usually occurs during the first few months the crystal is used. After the initial aging period, crystals are likely to maintain a stable frequency for the rest of their natural useful life. Aging in crystals may be accompanied by a deterioration in activity. If crystal activity drops as much as 25 percent during the initial aging period it is possible that the crystal has some contamination of natural flaw.

Contamination results when foreign matter accumulates on the crystal. This may seriously affect the crystal's operation as to both frequency and activity. Because modern crystals are "plated," there is no practical field repair suggested, and such crystals should be returned to the factory for service.

Grown (Synthetic) Crystals

Synthetic quartz crystals are now available, but because of their high cost they are still in the research and development stage. These crystals are not synthetic in that they are a substitute material, but they have been produced by controlled methods--or "grown." Physically, they resemble the natural quartz and may prove to be superior in that they are relatively free from impurities.

Another advantage is that grown quartz can be supplied in large slabs of the proper "cuts,"

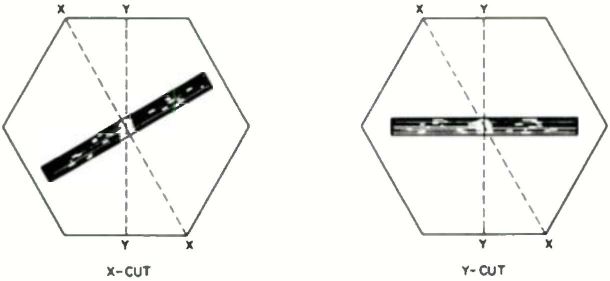

Crystal Oscillator "Plates" are Cut from the Crystal According to the Crystal Axes.

so there is comparatively little waste. (For natural quartz, a very high percentage of the original material is waste. Only that part of the crystal which is free from impurities, and of the proper cut, can be used.) Indications are that synthetic quartz may eventually replace the natural quartz crystal.

The Crystal Controlled Oscillator

Figure 4 shows the basic circuit of the crystal controlled oscillator. The main difference between this circuit and that of figure 3 is the crystal inserted in the feedback path between the cathode and the two tank capacitors. (The coupling capacitor, C4 is variable for warping purposes.) This circuit uses a series-mode crystal, designed to operate at the third harmonic frequency. The grid tank circuit is tuned to the crystal frequency. The crystal acts like a series circuit; at resonance, it offers a very low impedance to the feedback current from the cathode to the tank, and the circuit operates in much the same manner as figures 2 and 3. At any frequency other than resonance the impedance of the crystal rises sharply and the feedback current is too low to sustain oscillation. Thus, the circuit can oscillate only at the resonant frequency of the crystal.[3]

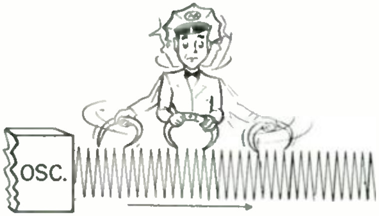

For Reliable Receiver Operation the Local Oscillator Must Generate a Constant-Frequency RF Signal.

Metering The Crystal Oscillator

The operation of the circuit of figure 4 depends largely upon the crystal action, and its stability is such that tuning the grid tank circuit does not noticeably affect the frequency. The tank circuit, which now controls the amount of oscillator activity, is normally adjusted for maximum oscillator output. This is made possible by measuring grid current. As the tank is adjusted to the crystal frequency, the voltage across the tank increases and causes a high grid voltage.

Grid voltage or current may be recorded by an arrangement shown in figure 7. A sensitive microammeter (such as a 50 ua movement), in series with a suitable resistor is connected between the oscillator grid and ground. As the tank is adjusted to resonance, the meter reads maximum. In figure 7, the bypass capacitor and resistor are mounted close to the oscillator tube socket. The capacitor removes all RF from the meter lead.

---

[3] See TM 11-668 FM Transmitters and Receivers, pages 142-146.

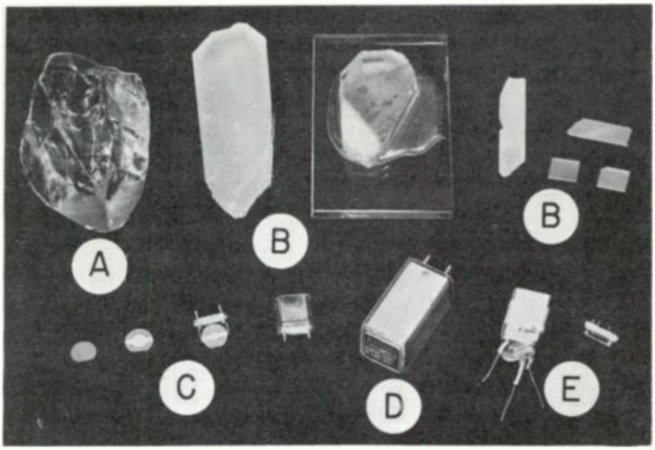

Construction of a Modern Temperature Controlled Crystal. A. A Raw Quartz Crystal. B. Steps in Cutting Plates. C. Crystal is Plated and Placed in a Holder. D. The Final Assembly. E. The Thermostat and Heater Assembly

All crystal oscillators do not behave alike when being tuned through resonance, and this must be kept in mind by the serviceman when making adjustments. For example, while the meter reading may be maximum at resonance, the grid activity may exhibit a marked lack of uniformity at each side of resonance. On one side of resonance, the grid activity shows a gradual decrease; on the other side of resonance, the oscillator stops working, and the meter reading drops to zero!

When tuning such oscillators, this condition must be taken into account. If the circuit is adjusted to maximum on the meter, there is a high probability that some change in the operation will suddenly shift the frequency and oscillation will stop. For this particular type of oscillator, the tank should be adjusted not to maximum, but to a frequency slightly to the side of resonance where the activity decreases gradually. Then, should the frequency change in either direction, the oscillator will continue to operate. (Before adjusting any oscillator, it is essential that the serviceman first read the instructions in the service manual.)

Motorola
Oscillator-Multiplier Circuit

Figure 8 shows the final arrangement of a high frequency oscillator and multiplier stage as incorporated in many Motorola receivers. It contains several minor modifications of the basic oscillator circuit of figure 4, but the principle of operation remains essentially the same.

At 32mc, the capacitance of the crystal acts like a partial short for the RF. Coil L4, parallel to the crystal, tunes this capacitance to resonance, effectively removing the "short." The resistor across L_1 improves the stability of the parallel-tuned circuit. Coil L3 permits efficient oscillator operation over a wide range of frequencies, thus providing for any desired change of channel frequency. Warping capacitor C4 aids in setting the oscillator on the exact frequency, compensating for any crystal aging or circuit changes. Although C3 is located in a different part of the circuit, it is still the grid capacitor and serves the same purpose as C3 in figure 3.

The two tuned plate circuits operate at the fifth harmonic (160 mc) of the crystal frequency (32 mc). These high-Q circuits are critically coupled for maximum rejection of all other harmonics. The signal fed to the mixer is taken from a low impedance tap on the second tuned circuit; in this way, only the correct harmonic reaches the mixer with appreciable amplitude.

In addition to the voltage dropping resistor and bypass capacitor at the screen grid, a second resistor is connected between the screen grid and ground. This resistor maintains a more constant voltage at the screen for changes of screen current and supply voltages, thus improving the overall stability of the circuit.

The design of the oscillator of figure 8 is such that it is stable over the entire tuning range of the tank circuit and it is thus possible to tune the grid circuit for maximum activity as well as output.

In order to have maximum signal from the mixer, both oscillator plate tank circuits must be tuned to 160 mc. Within the design limits of the mixer, the amplitude of the 12-mc If output voltage increases in direct proportion with the strength of the 160-mc voltage. Thus, by monitoring the signal strength at a later stage (limiter), the plate tanks of the oscillator may be adjusted for a maximum reading.

The tuning range of the oscillator plate circuits is designed so that these circuits cannot be tuned to any harmonic frequency other than the fifth harmonic. This prevents mistuning them to an incorrect frequency, resulting in a false indication in the following circuits of the receiver.

Constant Temperature Ovens

All crystals exhibit some change in frequency with any change in temperature. The normal drift may remain within the requirements of receiver operation for low-frequency receivers; but at higher frequencies, where the amount of frequency change is multiplied by a factor depending upon the oscillator harmonic chosen, a constant-temperature oven becomes essential.

The temperature within these ovens is higher than the operating temperature of the equipment. A heating element (operated from the car battery in mobile applications) is turned on and off by means of a thermostat, thus maintaining an even temperature at all times. By maintaining the crystal at a constant temperature, the oscillator does not drift as a result of changes in ambient temperatures.

The heating element, thermostat, and crystal are usually built into a small plug-in assembly. Although not shown on the schematic of figure 8, the 32-mc crystal is part of a constant-temperature oven assembly.

The High-Frequency Mixer

The incoming RF signal and the oscillator RF voltage combine in the mixer stage to create the desired intermediate frequency. For best results the oscillator voltage should be many times greater than the RF input. (In most receivers the oscillator will generate more than 1/2 volt). When the RF signal is small as compared to the oscillator voltage, and when the oscillator voltage is applied to the mixer at a point of low impedance (such as the cathode), the possibility of spurious response and intermodulation is minimized.

The conversion transconductance, or amount of gain possible in a mixer stage, is about one-fourth the gain which would be possible if the same tube were operated as an amplifier. Since the mixer output voltage depends largely upon the impedance presented to the IF signal current in the plate circuit, it is desirable that this plate circuit be highly selective.

A typical mixer, with an input of 172 mc is shown in figure 9. The local oscillator voltage at 160 mc is injected into the cathode circuit. The 1.25-volt bias developed across the cathode resistor operates the tube at the lower portion of the characteristic curve. A triode is used in the mixer stage so that the noise generation will be low, and the three high-Q, critically-coupled tuned circuits in the plate provide maximum IF signal output with good selectivity. (More will be said about Q and coupling in the following lesson.)[4]

Does Heterodyning Affect Deviation?

The question of deviation always arises in connection with mixer action and the resulting IF signal. We can best explain this by giving an example. Assume the incoming 172-mc signal has a deviation of ± 15 kc.

---

[4] See TM 11-668 FM Transmitters and Receivers, pages 127-140; also FM Transmission and Reception, by Rider and Uslan, pages 256-262.

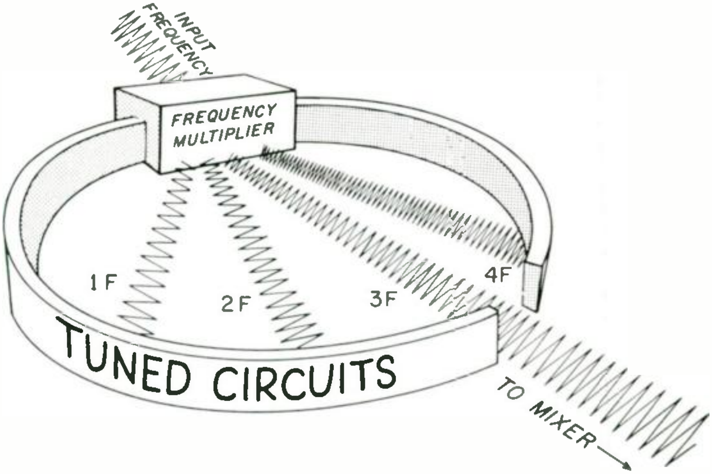

The Frequency Multiplier Generates Many Harmonic Frequencies. Only the Desired Harmonic (3F in this Illustration) is Selected and Applied to the High-Frequency Mixer.

This means the RF swings 15 kc above and 15 kc below center frequency. The incoming RF is not a constant frequency of 172 mc, but varies between 171.985 mc and 172.015 mc.

When the RF is at center, or 172 mc, it combines with the constant 160-mc oscillator voltage to produce the center IF frequency of 12 mc. When the RF is 171.985 mc it again combines with the 160-mc signal, but the difference is now 11.985 mc. Similarly, when the RF is 172.015 mc, the difference frequency is 12.015 mc. The IF frequency thus varies between 11.985 and 12.015 mc, which is a deviation of ± 15 kc. From this we may generalize that heterodyne action does not change the deviation; the resulting IF has the same deviation as the applied RF.

The First IF Amplifier

The first (12 mc) IF amplifier, which is located between the first and second mixers, is shown in figure 9.

A high-gain pentode is used for the circuit of figure 9, and the tube is operated with relatively low voltages at the plate and screen. Bias is developed by means of a cathode resistor and bypass capacitor.

Besides amplification, the seemingly endless problem of selectivity must also be taken into consideration, for in present day operation, a receiver cannot have too much selectivity in order to be free from intermodulation and other spurious response.

Even with good selectivity in the first IF section, it is possible to have intermodulation and image-frequency response in the second mixer as well as in the first mixer. The last IF frequency is usually 455 kc; the image frequency in the second mixer will therefore be spaced 910 kc from the channel frequency of 12 mc. With the oscillator operating above the IF, any signal reaching the second mixer which is 910 kc above the 12-mc IF will produce an image response.

Selectivity is obtained by means of the tuned circuits of the first IF amplifier. Three high-Q, critically-coupled circuits are employed in both the plate and grid for the purpose of offering high impedance to the IF frequency, providing gain and selectivity.

Summary

This lesson has been largely restricted to a consideration of the 172-mc receiver, and since there is considerable difference in the front end of the 450-470 mc receiver, the latter calls for further study. Before proceeding to study the 450-470 mc receiver however, let us first review what has been said in this lesson about the operation of the high-frequency oscillator-mixer and first IF amplifier.

1. The purpose of this portion of the receiver--the front end--is to deliver an interference-free signal with a high s/n ratio to the second mixer.

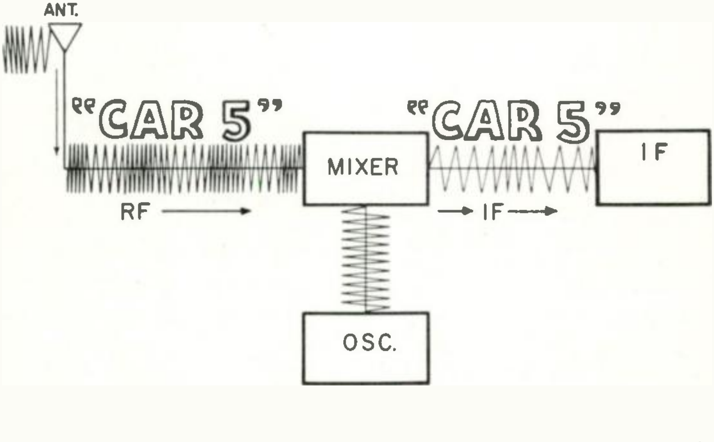

Heterodyning Does Not Alter the Deviations of the FM Wave; the IF Has the Same Deviations as the Incoming RF.

2. The high-frequency, crystal-controlled oscillator is temperature compensated for maximum stability.

3. The crystal oscillator frequency can be altered (or "warped") to compensate for the natural aging of the crystal. This is usually accomplished by means of a small variable capacitor.

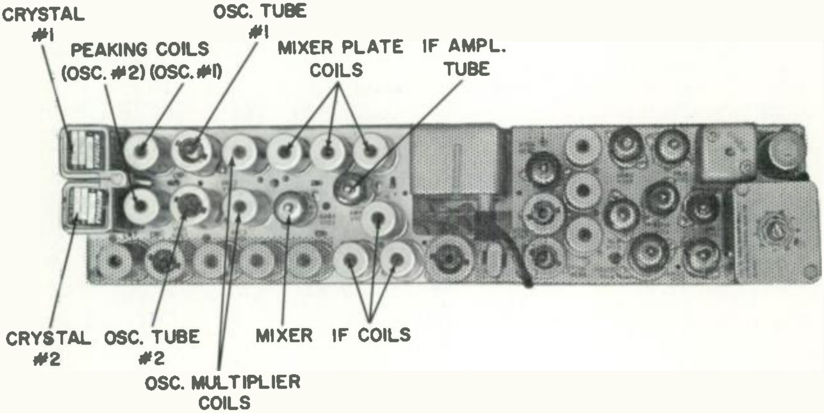

This Photo Shows the Location of the High-Frequency Oscillator-Mixer and First IF Amplifier of a Typical Motorola Receiver.

4. The mixer heterodynes the RF and oscillator signals to provide the required IF. High-Q and critically-coupled circuits in the mixer and IF amplifier plate circuits provide the required selectivity. The mixer is designed for maximum output at the intermediate frequency.

5. The heterodyning process in the mixer does not change the deviation characteristics of the signal. The frequency variations of the IF signal are identical to those of the incoming RF signal.

6. The IF-amplifier provides high gain and sharp selectivity.

The 450.470 MC Receiver

Figure 10 shows a typical 450-470 mc mobile receiver, in block diagram form. Compare this with figure 1, which shows the front end of a communications receiver operating at 172 mc.

There is considerable difference in the design of the front-ends of the two receivers. This is due to the different operating characteristics of tubes and circuits at the higher frequencies.

Because it is difficult to obtain amplification at 450 mc with ordinary tubes, the RF amplifier and mixer tubes are omitted. Instead, the RF section consists of four or five highly selective tuned circuits which form a "preselector," to reject unwanted signals and to pass the desired channel frequencies with very little attenuation. The preselector presents very little opposition to the passage of the desired signals and it does not add to the noise level. (These tuned circuits are basically a series of tuned "flat" lines. While very practical at these higher frequencies, the larger size of a similar type preselector at lower frequencies would present a mechanical problem).

The RF signal and the oscillator-multiplier output are injected into a crystal mixer to produce the desired IF. While the crystal mixer does not amplify, its noise level is low and the IF output has a satisfactory signal-to-noise ratio. The first actual amplification is provided by the IF amplifier. It is important that this stage produces a signal having a high s/n ratio, in order to result in a noise-free output at the speaker. The cascode amplifier is often used in the first IF stage because of its amplification capabilities and its low noise level.

The cascode amplifier is really two stages of triode amplification, consisting of a neutralized amplifier followed by a grounded grid amplifier. A typical circuit is given in figure 11. Coil L1 allows some out-of-phase energy from the output to feedback to the grid, thus opposing or canceling the effect of the regenerative voltage at the grid due to interelectrode capacitance.

The output of the first triode is applied to the cathode circuit of the second triode (the grid of which is grounded). This second triode requires no neutralization because the feedback voltage due to tube capacitance is degenerative (with cathode injection) and cannot produce instability or oscillation. While the cascode amplifier is actually two tubes operating in series, it is common to refer to the arrangement as a single stage. (In most applications a single twin-triode type tube is used.) The amplification of the cascode amplifier is higher than that of a single pentode, particularly at higher frequencies, and the noise level is lower.

Referring again to figure 10, it will be seen that triple conversion is used in this 450 mc receiver. At the first mixer the 12th harmonic of the oscillator is required. This harmonic is provided by a series of harmonic amplifier stages. For the second mixer the second harmonic of the same oscillator is selected. This second IF frequency varies with the channel assignment. The high-frequency oscillator is crystal controlled and is maintained near its correct frequency by an AFC circuit. The third oscillator frequency is selected so that the last IF will be 455 kc. From here on the rest of the receiver is similar in circuitry to lower frequency receivers.

Propagation characteristics of the 450-470 mc band have been found, in general, to be very satisfactory. In metropolitan areas, multiple reflections between buildings, together with use of a high antenna at the base station, have provided reliable coverage which might not have been possible at lower frequencies. Thus, 450-mc equipment has made two-way communication possible for many services where it otherwise would have been impossible.

IMPORTANT WORDS USED IN THIS LESSON

AGING: As applied to quartz crystals used in oscillator frequency control, aging is a natural change in the crystal frequency evidenced over a period of time.

CRYSTAL-CONTROLLED OSCILLATOR: An oscillator which makes use of a quartz crystal to provide a high degree of frequency stability.

FREQUENCY MULTIPLIER: A form of amplifier which produces an output at some harmonic frequency of the input signal.

HARMONIC FREQUENCY: A frequency which is a whole number multiple of the fundamental frequency.

PIEZOELECTRIC EFFECT: A natural phenomenon associated with certain crystals. When a voltage is applied across its faces, the crystal is distorted mechanically. Conversely, when the crystal is subjected to a mechanical strain, a voltage is produced across its faces.

QUARTZ CRYSTAL: A silica material which exhibits Piezoelectric properties. Its most important use in the electronics industry is in conjunction with an oscillator as a frequency controlling device.

WARPING: This is the changing of the frequency of a crystal-controlled oscillator so that it operates exactly at the required frequency.

STUDENT NOTES

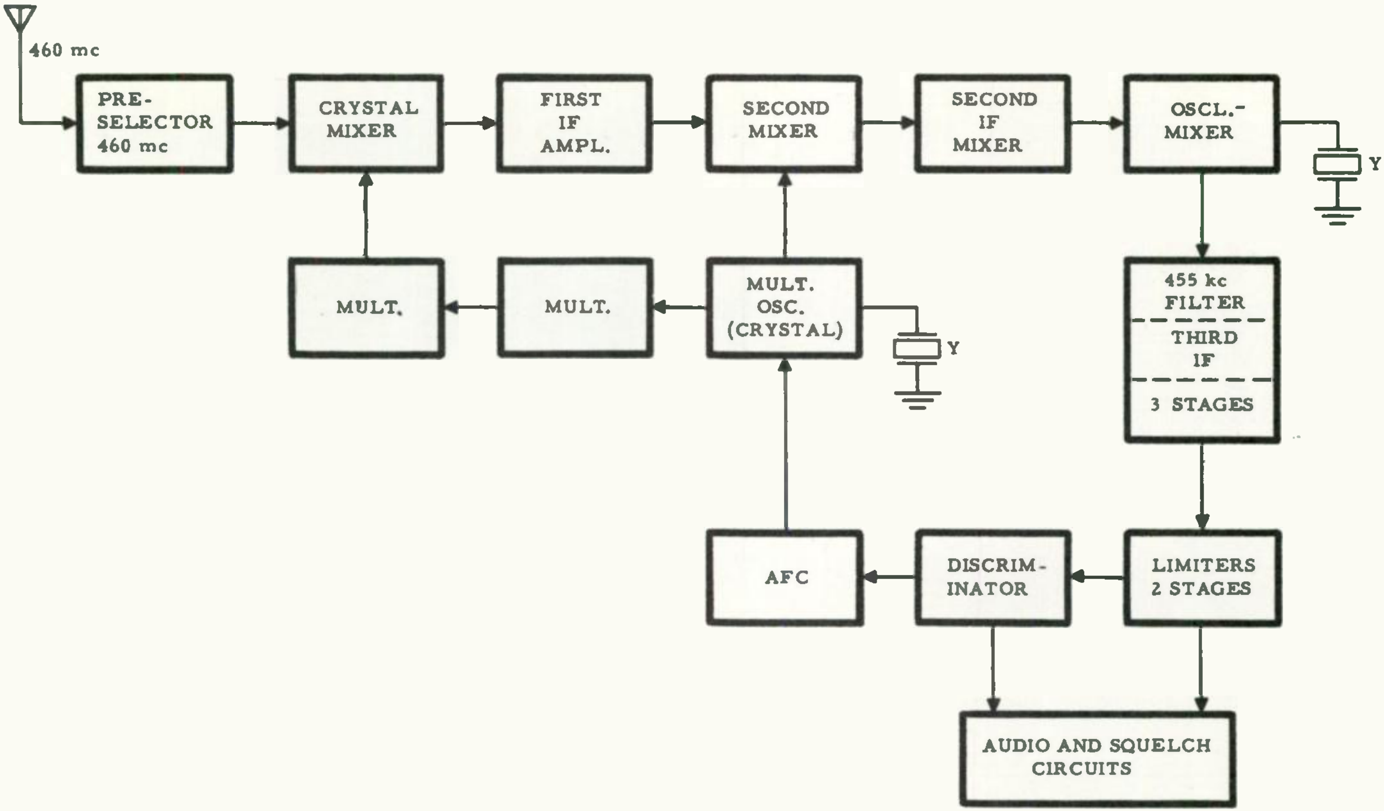

450-470 MC RECEIVER

FIGURE 10

STUDENT NOTES

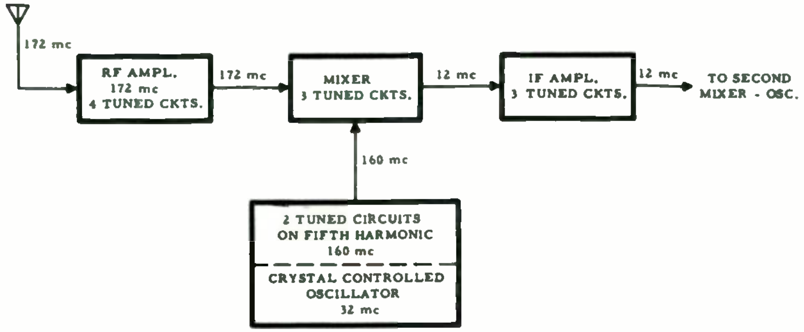

"FRONT END" OF COMMUNICATIONS RECEIVER

FIGURE 1

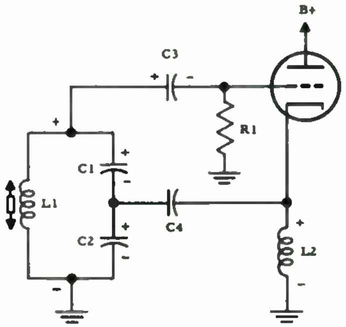

FIGURE 2
COLPITT OSCILLATOR

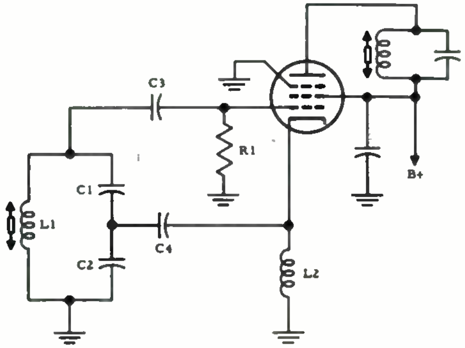

FIGURE 3
OSCILLATOR - MULTIPLIER

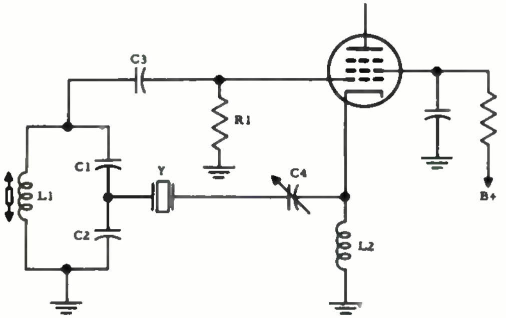

FIGURE 4
CRYSTAL CONTROLLED
OSCILLATOR

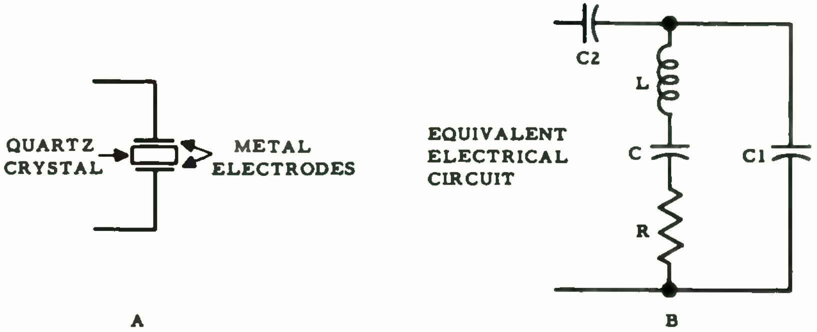

FIGURE 5

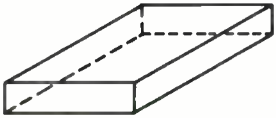

(A) UNDISTORTED PLATE

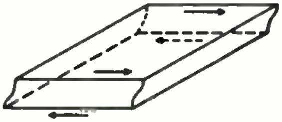

(B) DISTORTION FOR FUNDAMENTAL MODE

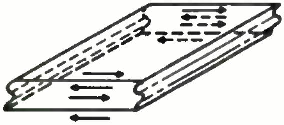

(C) DISTORTION FOR THIRD HARMONIC MODE

FIGURE 6

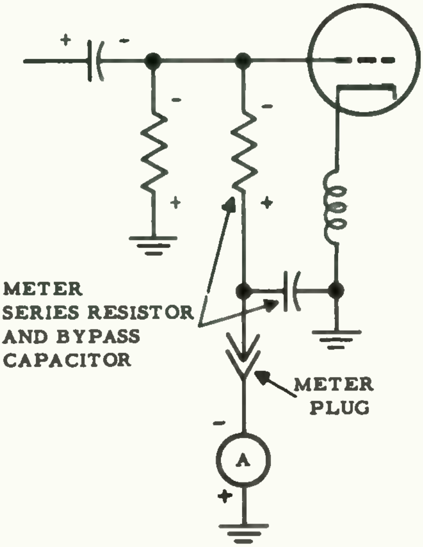

OSCILLATOR METERING

FIGURE 7

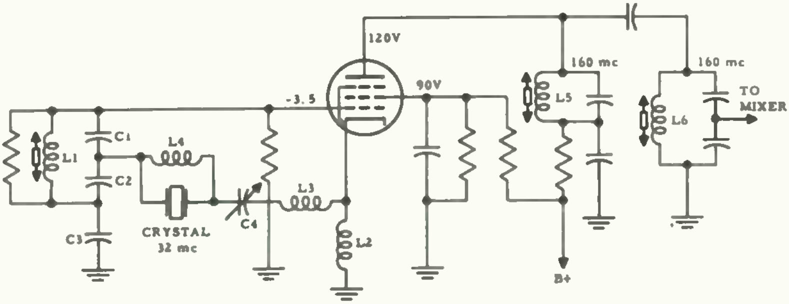

HIGH FREQUENCY OSCILLATOR AND MULTIPLIER

FIGURE 8

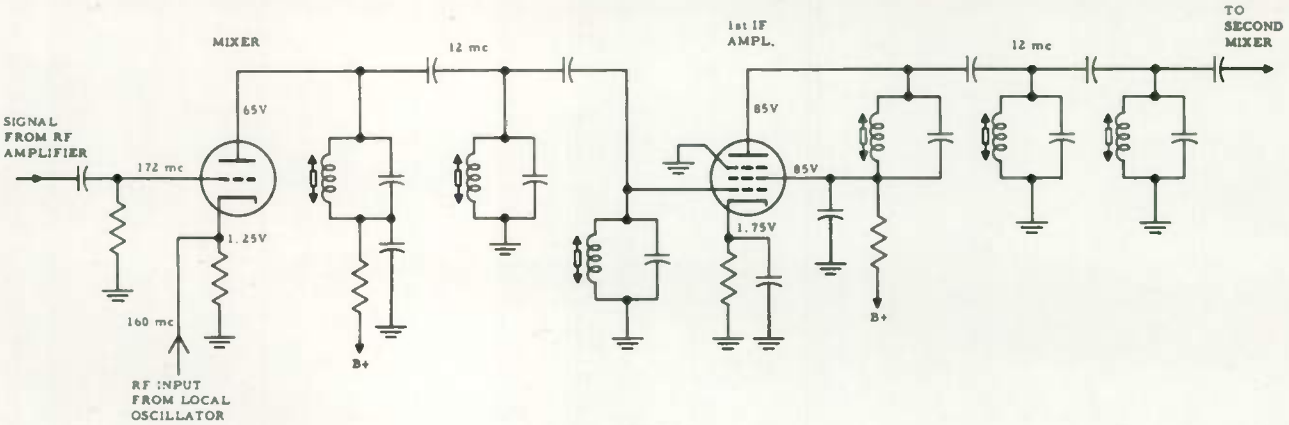

FIGURE 9
MIXER AND FIRST IF AMPLIFIER

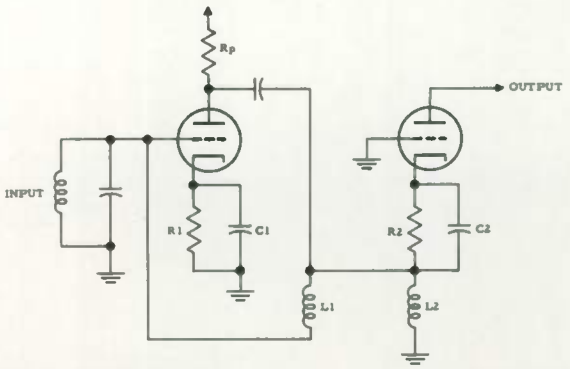

CASCODE AMPLIFIER
FIGURE 11

Motorola Training Institute

4501 West Augusta Blvd., Chicago 51, Ill.

Please PRINT or use STAMP

Name ______________________________ Student No. ______

Street ____________________ Zone ____ Date ______

City _______________ State ________ Grade ______

EXAMINATION LESSON RA-4

1. Assuming that the injection voltage from the oscillator to the mixer in figure A has a lower frequency than the RF, the crystal frequency will be ______________________________ mc.

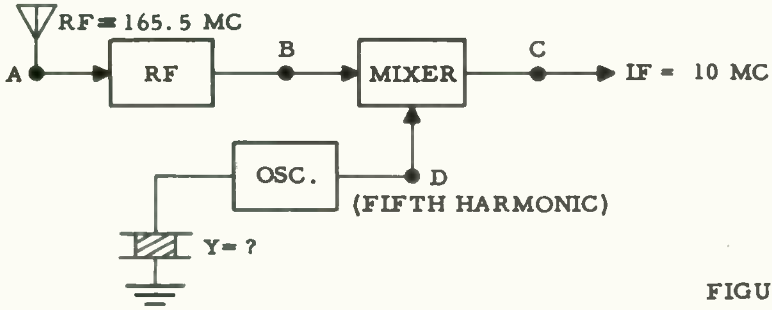

FIGURE A

2. For the values of figure A and Question 1, the image frequency is ________________ mc.

3. Referring to figure A, what is the resonant frequency of the tuned circuits at the following points? A ____ mc; B ____ mc; C ____ mc; D ____ mc.

4. The main advantage of using a crystal-controlled oscillator is ______________________________.

5. Which of the following are likely to cause a change in the operating frequency of a crystal controlled oscillator in the two-way communications receiver?

   A. A strong RF signal into the antenna. A. ______
   B. A weak RF signal at the antenna. B. ______
   C. A change in crystal temperature. C. ______
   D. A large change in the oscillator screen grid voltage. D. ______

6. In an oscillator circuit such as that of figure 8 of this lesson, the crystal acts like a (series)(parallel) resonant circuit. At resonance the crystal presents a (high)(low) impedance and allows (maximum)(minimum) feedback current.

7. The voltage applied from the oscillator to the mixer should be (larger)(smaller) than the incoming RF signal. This improves the receiver's (freedom from intermodulation)(selectivity).

8. The tuned circuits in the front end of the receiver must have good selectivity and minimum insertion loss. This is accomplished by having (high Q)(low Q) circuits with (loose)(tight)(critical) coupling.

9. The incoming signal to a receiver has a frequency of 166 mc and a deviation of 10 kc. This signal is converted to an IF of 11.5 mc. The IF signal will then have a deviation of ____________ kc.

10. The first IF amplifier section of a communications receiver has two main functions. These functions are ____________________ and ____________________.

national
MOTOROLA
RADIO COMMUNICATIONS
service

A TWO-WAY RADIO COMMUNICATIONS TRAINING PROGRAM

LESSON RA-5
FM RECEIVERS

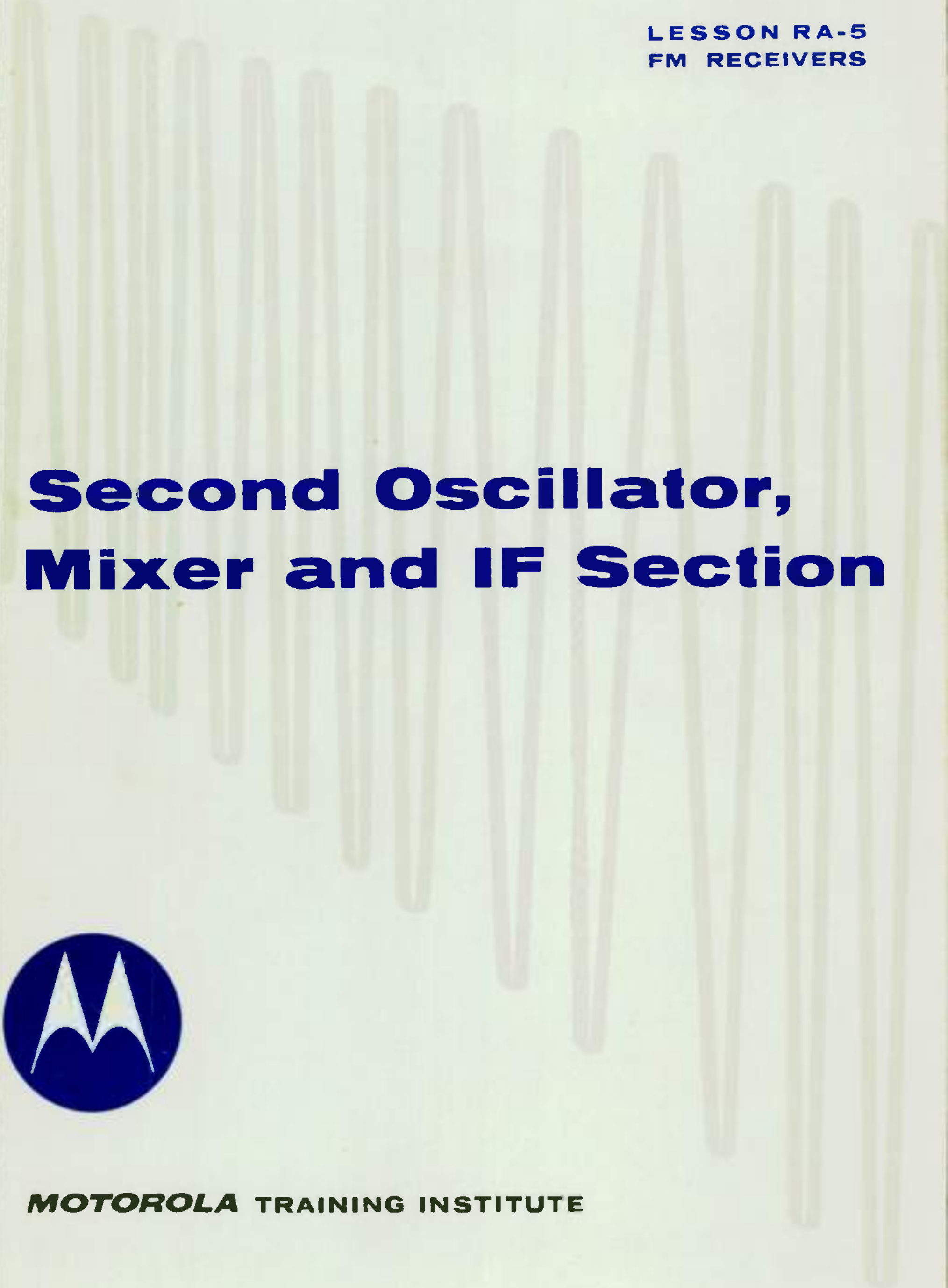

Second Oscillator, Mixer and IF Section

MOTOROLA TRAINING INSTITUTE

A TWO-WAY RADIO COMMUNICATIONS TRAINING PROGRAM

LESSON RA-5
FM RECEIVERS

Second Oscillator, Mixer and IF Section

—one of a series of lessons on two-way FM communications—

MOTOROLA TRAINING INSTITUTE
4501 W. AUGUSTA BLVD., CHICAGO 51, ILLINOIS
APPROVED BY THE STATE OF ILLINOIS
DEPT. OF REGISTRATION AND EDUCATION

PREFACE

This is one lesson of a complete Motorola Home-Study Course which presents to the Service Technician both the principles of operation and the maintenance of two-way FM radio systems. The program covers mobile, portable and base station equipment, including the latest transistorized units.

THE SECOND MIXER, OSCILLATOR AND "IF" STAGES

LESSON RA-5

TABLE OF CONTENTS

NOTICE

Diagrams and figures referenced in text are "fold-outs" in back of each lesson, for use while studying. The Examinations are also there.

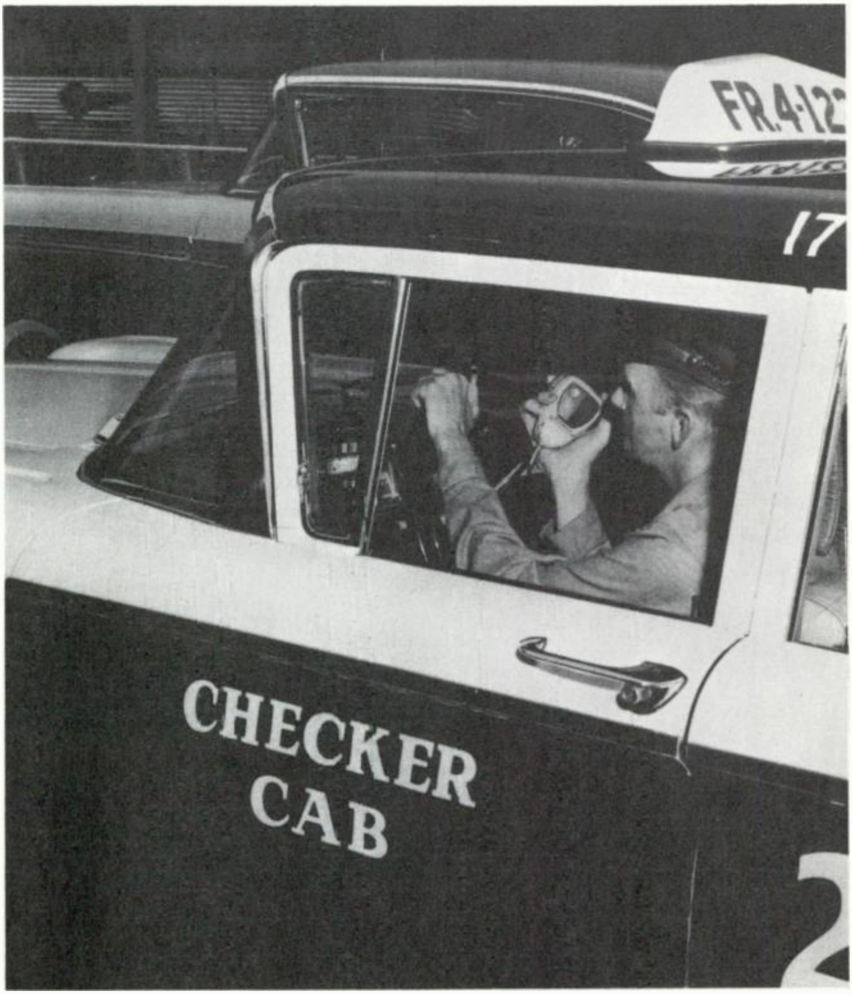

Since 1945, taxicab operators have been providing faster, more reliable, yet more economical service through radio dispatching. Today about two thirds of the nation's cabs are radio equipped.

THE SECOND MIXER, OSCILLATOR AND "IF" STAGES

Lesson RA-5

Introduction – Review

We are now prepared to discuss the second mixer, oscillator and last IF stages of the receiver, but before proceeding, let us review what has already been accomplished with the signal in the front-end stages.

The RF stage, we found, amplifies the incoming signal and provides considerable RF selectivity, so that the signal at the mixer input has a good signal-to-noise ratio and is relatively free from interfering signals--signals which might cause image response, intermodulation and desensitization.

The high-frequency oscillator is both crystal controlled and temperature compensated, for maximum stability. In order to minimize spurious responses, highly selective tuned circuits at the oscillator-multiplier provide high attenuation of other harmonics, and only the desired harmonic frequency of the oscillator reaches the mixer. The overall effect is that the signal from the mixer has a constant center frequency, is relatively free from interfering signals, and has a good signal-to-noise ratio. The high-frequency IF amplifier stage provides the gain necessary to supply a satisfactory signal to the second mixer. At the same time, the excellent selectivity of the tuned circuits further rejects unwanted signals.

This is what has already been accomplished, in the front end of the receiver. The following remains to be done in the rest of the receiver.

1. Reject all remaining signals except those of the desired channel.

2. Provide a large amount of amplification ahead of the limiters.

3. Remove all amplitude variations (noise voltages).

4. Convert the FM deviations into corresponding audio voltages.

5. Amplify the audio signal in order to operate the speaker.

6. Squelch the noise between transmissions.

In this lesson we shall be concerned with the first two of these functions. (The last four, accomplished in subsequent stage of the receiver, will be discussed in later lessons). In discussing the selectivity of the final IF section of the receiver, we shall make use of selectivity curves. Also, since the amount of rejection or attenuation of unwanted signals is usually rated in decibels, this lesson will include a brief discussion of decibels. With the above preview in mind, let us begin our study of this assignment with the low-frequency oscillator.

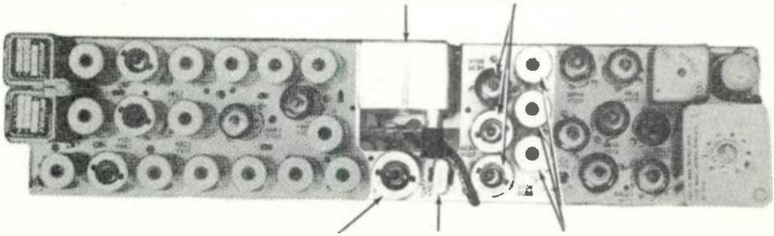

This Photo of a Motorola Receiver Shows the Location of the Second Oscillator-Mixer, Permakay Filter and Low-Frequency IF Amplifiers.

The Low-Frequency Oscillator

In order to provide for the required selectivity and amplification, the high-frequency IF signal (we have assumed 12 mc in the past lessons) must be converted to a low-frequency IF-455 kc in most communications receivers. This requires another mixer-oscillator combination. Figure 1 shows a typical circuit. With an IF of 12 mc, in order to secure a 455-kc, second IF, the oscillator must be either 455 kc above or 455 kc below 12 mc. As shown in figure 1, the oscillator frequency at 12.455 mc is above the incoming signal.

To insure maximum stability, the second or low frequency oscillator is crystal controlled. Because of its comparatively low frequency, the slight frequency change that occurs in this crystal controlled oscillator due to temperature has no appreciable effect on the operation of the receiver. Thus, the oscillator design is less critical and less complicated, and it is not necessary to use a constant temperature oven. The crystal acts like a parallel-tuned tank circuit controlling the frequency of operation. Feedback is obtained by connecting the cathode to the junction of the two capacitors connected in parallel to the crystal. The oscillator voltage is injected into the mixer grid through capacitor C1. The oscillator plate is bypassed to ground and has no active part in the oscillation of the circuit.

The Second Mixer

Two distinct inputs, the 12mc IF signal and the 12.455-mc oscillator voltage, are applied to the second mixer. The heterodyning action, or "beating", of these two inputs produces a difference frequency of 455 kc at the output of the second mixer. While the second mixer stage is operated in class A to minimize the generation of undesired signals, there is a satisfactory output at the second IF frequency. To provide a large voltage at 455kc, the plate load of the second mixer must present a high impedance at this frequency. At the same time, it must act as a low impedance to all undesired signals.

Obtaining Selectivity

When we remember that all the "intelligence" we want to hear is contained in the sidebands rather than in the carrier, we can appreciate the statement that the bandwidth of the last IF section must accommodate all of the incoming energy. Also, since FM deviations extend a considerable distance each side of center frequency, a frequency response which is both broad and flat is essential Beyond this "flat top" response, however, a sharp attenuation is required in order to eliminate adjacent channel signals. The theoretical ideal response would be nearly rectangular. In practice, however, a slight curve at the shoulder of the flat top is desirable in order to prevent phase distortion. Ideal selectivity curves, both theoretical and practical, are shown in figure 2.

Transformer Coupling

A conventional transformer-coupled, three-stage IF amplifier section is shown in figure 3. The gain of the circuit depends mainly on the transformer design; also, the selectivity depends on the Q of the tuned circuits and the coupling between the windings.

Figure 4 shows three response curves which are possible with various degrees of coupling between the windings of transformers. Curve 1 illustrates less-than-critical coupling. With all transformer windings loosely coupled the selectivity is very good but the response curve is too narrow to pass all the deviation components. This is undesirable, as FM reception relies on passing all of the "side bands" or deviations. Curve 2 of figure 4 indicates critical coupling; this response curve is similar to curve 1 but the gain is greater. This, too, is undesirable for FM reception. In order to secure a wider response, the degree of coupling is further increased, as shown in curve 3, but the "dip" in the center of the curve indicates overcoupling-producing uneven amplitude response and phase distortion.[1]

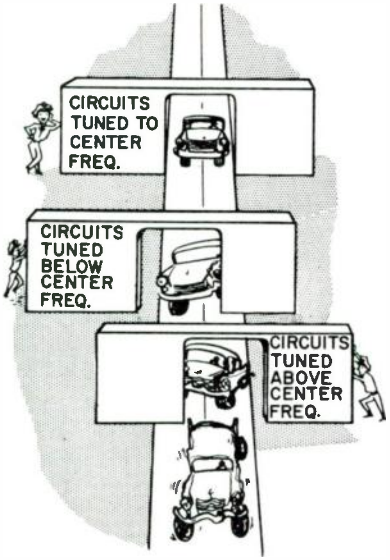

Circuits Tuned Above and Below Center Frequency Distort the Incoming Signal.

By employing overcoupled transformers in certain stages and critical coupling in others, it is possible to obtain a response curve that is relatively "flat" to accept the desired channel signals, and has fairly steep sides for the rejection of unwanted signals. There is considerable interaction between the windings, however, and the alignment of such tuned circuits thus presents a major problem. It is very difficult to secure the proper bandpass response curve, and the complicated tuning procedure which must be employed involves the use of special equipment.

The desired band-pass curve can also be obtained by using critical coupling between stages and detuning successive stages alternatively above and below the center frequency, so that each stage contributes to the over-all bandpass curve. Again the response curve is good, but this procedure results in undesirable phase distortion and the alignment is difficult.

Where the utmost rejection of adjacent channel signals is required, as in the case of the communications receiver, neither of the foregoing arrangements is a completely satisfactory solution. One alternate arrangement involves the use of a "triple tuned" transformer--a transformer equipped with a third, or tertiary, winding. (Actually, a number of these transformers must be used in order to obtain the proper curve with good rejection characteristics).

Such a transformer is shown in figure 5. The primary and secondary are inductively coupled, but the third tuned circuit is capacitively coupled to the secondary. These circuits can be designed for good response characteristics. Again, however, the problem of alignment is a distinct disadvantage and it is necessary to look elsewhere for the ideal solution to the problem of controlled selectivity.

---

[1] See TM 11-668 FM Transmitters and Receivers, pages 149-152; also FM Transmission and Reception, by Rider and Uslan, pages 263-272.

A system which separates the selectivity and amplification functions within the low-frequency IF section has proved to be most successful. This system makes it possible to use a specially designed filter, having the desired band-pass characteristics. Maximum amplification can then be designed into the following IF stages without considering problems of frequency discrimination and phase shift. The block diagram of figure 6 shows the general arrangement.

Immediately following the mixer, the signal encounters a highly selective filter which allows the signal components of the desired channel to pass on to the last IF amplifier strip with comparatively little attenuation. The response curve of the filter is very nearly that of the ideal response shown in figure 2. In operation, the slightly rounded corners and nearly vertical sides of the filter response are most desirable. The signals of the adjacent and other nearby channels are highly attenuated in the filter and do not reach the next stages. The high-gain, three-stage amplifier following the filter is designed for maximum gain and stability. No consideration need be given to selectivity--the only signal present is the desired signal.

Because it plays such an important role in the Motorola receiver, let's inspect this filter in greater detail.

The Permakay Filter

Motorola's answer to the high degree of selectivity required in the modern communications receiver is the very efficient and selective filter which is known under the registered trade mark of "Permakay". While it is pos-

Permakay Filters are Made in Many Sizes. The Very Small Ones are Used in Light, Compact, Portable Equipment.

sible to achieve considerable selectivity by using a great number of individual tuned circuits or simple filters, the resulting loss at the center frequency is prohibitive. Thus, a composite filter with many highly efficient tuned circuits (sections) is necessary. The Permakay filter components are specially designed and arranged so that attenuation of the signal frequency is kept at a minimum. During its manufacture, each completed filter is carefully aligned and tested, and then encased in a highly durable plastic which seals it from all humidity. Because of their rigid construction and the plastic seal, the tuned circuits cannot be jarred out of alignment. Thus, the filter operation remains the same for all conditions and produces positive performance at all times. Sealing the filter also makes it impossible for anyone to tamper with the tuning adjustments and upset the band-pass characteristics.

The Permakay filter has been so successful that its operation is guaranteed for life of the equipment. Also, by "packaging" the filter it is very easy to change the unit should the receiver selectivity requirements change. That is, when new station allocations on the adjacent channels make it necessary to employ a greater degree of selectivity, all that need be done is to replace the existing filter with another exhibiting greater selectivity and change the valve of a few resistors. Filters are available with any degree of selectivity that may be required in the two-way communications

RECEIVER SELECTIVITY

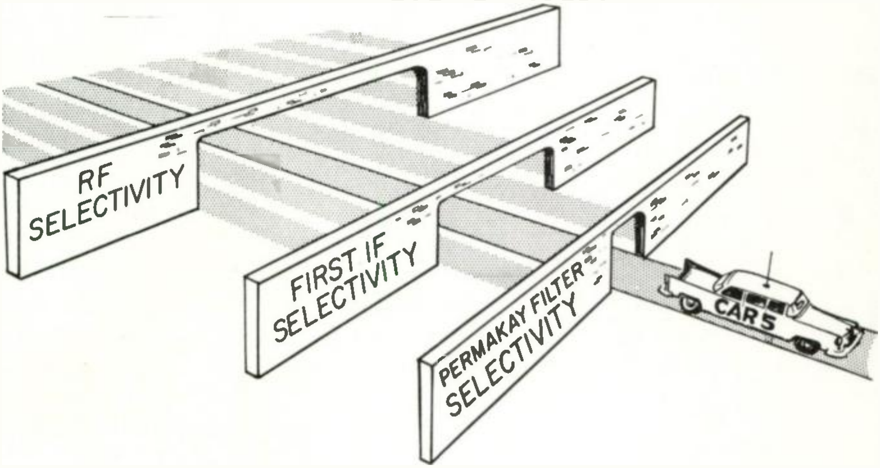

The Sharp, Controlled Selectivity of the Permakay Filter Allows Only the Desired Channel Signals to Reach the Detector.

receiver. At the present time, Permakay filters are designed for deviations of 5, 7.5 and 15 kc (a 40-kc deviation filter is used in 900-mc receivers).

Filter Design

All filters are designed to pass a specific band of frequencies and to attenuate all others. The boundary or frequency between the attenuated band and the passed band is called the "cutoff" frequency. Filters are divided into four classes, according to the frequencies to be passed. These are: low pass, high pass, band pass and band elimination. The IF filter in a receiver is a band-pass filter. It passes a specific band of frequencies and attenuates all others. Because there is no amplification these filters are often termed "passive filters".

Because there is always some loss due to resistance, all filters attenuate the signal to some extent. Attenuation of the desired signal in a passive filter is called "insertion loss". The input and output impedances of the filter must be held constant and they must match the impedances of the terminating circuits. By maintaining a constant impedance match, there are no reflections and the only losses are those due to resistance.

Filters are divided into "T" and "PI" types as shown in figures 7A and 7B. The impedances of the series and parallel section of these filters are designated Z1 and Z2 respectively. The equivalent circuits are shown in figure 8. Where two series-connected units make up the total series impedance as in figure 8A, the impedance of each unit is one-half that of the total series impedance. In a similar manner, the two parallel branches of figure 8B must each have twice the required impedance for the parallel section of the filter.[2]

The Constant "K" Filter

The simplest and most common kind of filter is the "constant-K" filter, in which the impedances Z1 and Z2 are so related that their product is a constant at all frequencies. (Motorola's trade name, "Permakay", is derived from this characteristic).

The cutoff, in a multisection constant-K filter, is gradual rather than sharp. To offset this, an "M-derived" filter may be used. This type of filter section is patterned after a constant-K, but it is provided with a sharper cutoff by the addition of tuned elements either in shunt (parallel) or in series. High attenuation will then occur at some frequency beyond the cutoff frequency. Two types of M-derived sections are possible. If the extra circuit is in series it is known as a "series derived" section, but if the added elements are in parallel the section is called "shunt derived".

---

[2] See TM 11-681 Electrical Fundamentals, pages 106-108.

The Permakay Filter in the Motorola Receiver May Be Easily Replaced.

A filter may be made up of any number of sections. The amount of attenuation of the rejected band depends directly on the number of filter sections, and the shape of the transmitted band depends upon the type of sections used. In multisection filters, a "uniform" filter is one having identical sections, while a "composite" filter is made up of two or more sections having different characteristics. In the latter case, each section is designed so as to add a particular operating characteristic to the filter response. A sharp cutoff section usually has a gradual attenuation beyond the cutoff frequency. When it is necessary to have a high attenuation of all frequencies beyond cutoff, a different type of section is added to the filter. In this manner, the bandpass may be designed to meet the requirements of the equipment. For filters requiring a very narrow bandpass, more filter sections are used.

In the case of composite filters, it is important that the impedance of one section match the impedance of the next in order to avoid reflections and losses which would impair the transmission response. Similarly, the end impedances must be properly terminated for best operation. The M-derived section is particularly efficient in matching the impedances of other M-derived section and constant-K sections.

The Permakay filter may have as many as 15 tuned circuits, where operation is on a narrow bandwidth and there are other transmissions on adjacent channels. Filters operating on narrow channels are compensated in order to avoid excessive frequency drift due to temperature changes. Some variation cannot be avoided, but where the channel is very narrow this must be minimized. The filter is not subject to detrimental factors such as weather conditions, and for this reason it should be the last part of the receiver to inspect when trouble arises. From a service standpoint, the simplest way to check the operation of a suspected filter is to substitute another, known to be good, and compare their operation.

Our discussion of filters has now brought us to the point where we are ready to discuss selectivity curves, but this entails some knowledge of the decibel. The student who feels that he is perfectly familiar with this subject may omit the two sections which follow, proceeding directly to the section headed "Selectivity Curves". Students requiring a review of this important subject, however, as well as those who have not had an opportunity to study the decibel before beginning this training, will profit by a careful reading of the following sections, headed "Introduction to Decibels" and "Decibel Reference Level", respectively.

Introduction To Decibels

There is probably no field of electronics today which makes more use of the decibel than does two-way communications. Overall gains, selectivity curves, noise levels and many other factors are all expressed in decibel levels, gains, or losses. The serviceman must have a good working knowledge of decibels, abbreviated db, in order to perform his duties intelligently. The decibel is often concerned with sound intensities, and there is a direct relationship in our hearing to the decibel. Thus, we have a convenient starting place for our discussion.

The physicist defines sound in terms of the wave motion or condensations and rarefactions that take place in air. From the physiological standpoint sound is the sensation produced in the ear by such wave motions. There is a difference in the amount of sensation as recorded by the ear as compared with the amount of energy used to produce these sound waves. In other words, our ears are neither reliable nor efficient in distinguishing between sound intensities. For example, will 10,000 people shouting sound 100 times louder than 100 people

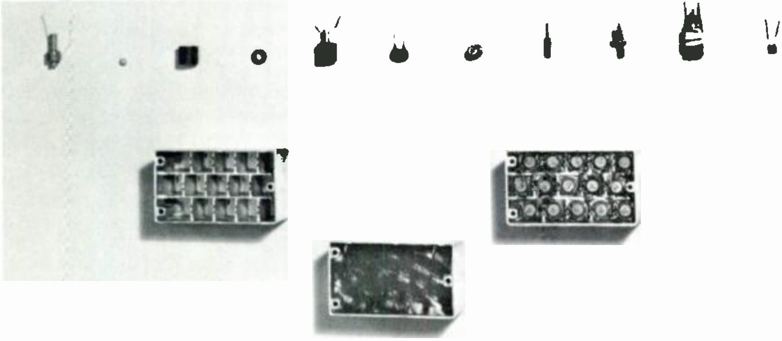

The New Die-Cast Filter is Much Smaller, Yet it Gives the Same Performance as Larger Models. Here We See the Separate Parts Used in This Filter and the Complete Assembly Before it is Potted.

shouting? The answer is NO. The difference to our ears is only about 20 times louder. There are many such examples that illustrate the non-linear hearing characteristics of the human ear.

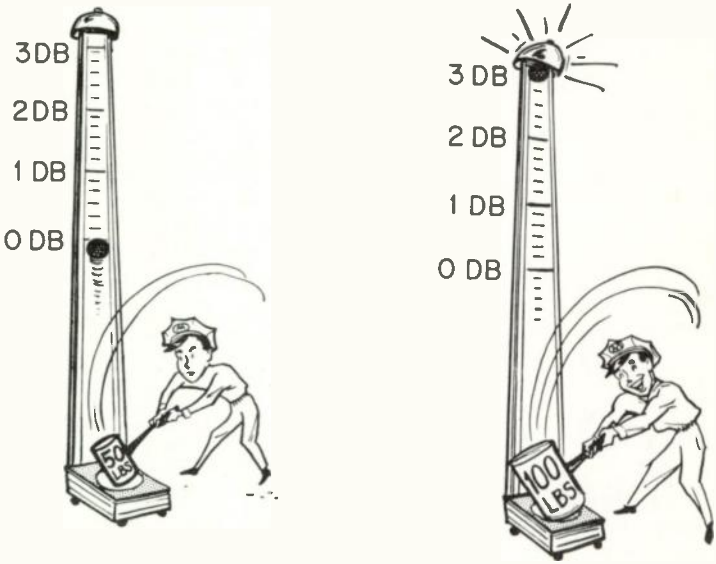

In Electronics, a Power Ratio of Two-To-One is a Difference of 3 DB.

The specific relationship between the amount of sound energy and the intensity of what we hear is conveniently expressed in terms of decibels. The decibel is said to be the smallest change of sound intensity that the human ear can detect; moreover, the conditions must be ideal, or a change of sound intensity of one decibel may not be noticeable. This is a rather non-technical definition but it illustrates how the decibel is used.

As a further example in comparing sound levels, a sound producing device increasing to twice its original power output produces a 3-db increase in intensity. Any time "power" is doubled it represents an increase of 3 db. Should the power be reduced to one-half its original value, there will be a 3-db loss; the power is said to be "down 3 db". This 3-db relationship holds true whether the level is but a small portion of a watt or many thousands of watts. For example, assume that the power from a speaker is increased from 1 to 2 watts. This is a 3-db change. On the other hand, when the power output from a commercial broadcast station is increased from 10,000 to 20,000 watts, the increase again is just 3 db. In the first instance it required only 1 watt to double the power and produce a 3-db gain; in the second case, 10,000 watts were required to cause the 3-db increase.

The exact amount of db change is usually found by means of logarithms. Where two power levels are concerned, the formula is:

(1) db = 10 times the log of P1/P2.

Where voltages (or currents) are being considered, the formula is:

(2) db = 20 times the log of E1/E2 (or I1/I2).

In using either of these formulas, place the larger number in the numerator in order that the ratio will be larger than 1. If amplification has taken place, the answer is said to be a db gain; if there has been some attenuation, the result is the db loss.

EXAMPLE 1.

Find the db change for a power increase from 5 watts to 10 watts.

Using formula (1),

db = 10 times the log of 10/5, or 2.

from a log table, the log of 2 is .3010.

Substituting,

db = 10 times .3010, or a 3.01-db increase.

If the power had been reduced from 10 to 5 watts, the solution remains the same, but this would be a 3-db loss instead of a gain.

EXAMPLE 2.

Find the db change when the voltage in a circuit is reduced from 16 to 2 volts.

Using formula (2),

db = 20 times log 16/2, or 20 times log of 8.

The log of 8 is .9031, and the db loss is 20 times .9031, or about 18 db.

The convenience of using decibels may not be apparent in the foregoing examples, but consider the problem of determining the total gain (amplification) of a communications receiver where the gain might easily be 1,000,000. Without decibels, the gain of each separate stage is determined, and then the gains of the individual stages must be multiplied. When the gain of each stage is given in terms of the equivalent db, the separate db gains are added (or subtracted, in the case of a loss).

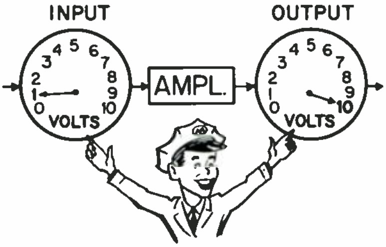

When the Impedances are the Same, a 10-to-1 Increase in Voltage is a 20-DB Gain.

The decibel also eliminates the use of large, unwieldy numbers. Let's take as an example the receiver having a gain of 1,000,000. What is the db gain? Fortunately we do not have to resort to math when graphs such as figure 9 are available. The vertical scale is laid out in decibels, and along the horizontal scale we find ratios from 0 to 1,000,000. Two "curves" are given, one for voltage and current ratios and the other for power ratios. In order to find the corresponding db gain (or loss) for a given ratio, locate the specific ratio on the horizontal scale, follow the line up to the proper curve and then read the db value directly to the left. For the problem of a voltage gain of 1,000,000 we use the last horizontal division to the right, follow up to the voltage curve and then read the corresponding db change to the left. This is 120 db. As this represents receiver amplification, there is an increase of 120 db.

From the current and voltage curve of figure 9, we can find values such as these:

Current or voltage ratio	db change
10	20
100	40
1000	60
10,000	80
1,000,000	100

From this we see that each time the voltage is increased 10 times, there is a 20-db gain.

From the power curve of figure 9 we get these values:

power ratio	db change
10	10
100	20
1000	30
10,000	40
100,000	50
1,000,000	60

Each power increase of 10 times is a 10 db gain. It is interesting to note that the voltage (or current) db change for any ratio is always exactly twice the corresponding db power change.[3]

Decibel Reference Level

To say that the power of a transmitter has increased 1 watt does not tell us very much unless we also know the power level before the increase took place. When this increase occurs for a

---

[3] See TM 11-662 Theory and Applications of Electron Tubes, pages 138-139; also Test Methods, pages 3-50 to 3-53.

low power device having but 1 watt of power originally, the increase of 1 watt means a doubling of the power and a 3-db increase.

Should the same increase of 1 watt occur in a transmitter with an original output of 20 watts, the power will now be 21 watts. The effective increase is only 0.2 db and will not be noticeable. An increase or decrease can always be accurately stated in terms of decibels, for this is always a comparison of two levels and automatically indicates the effective increase.

It is not uncommon to find a reference such as "-40 dbm". This rating must assume a standard reference level, and in the electronics industry the value of .001 watt (1 milliwatt) is taken to be the reference or 0 dbm (across 600 ohms).

The level is 40 db lower than .001 watt and 40 db represents a power ratio of 10,000. This means that the power level is 1/10,000 of .001 watt, or .0000001 watt. With the power level known and a standard impedance of 600 ohms, the voltage can be determined from the formula, $E=\sqrt{WR}$. Substituting, the voltage is .0077 volt.

Things to remember about decibels:

1. The decibel is always a comparison between two levels, whether these refer to voltage, current or power.

2. An increase (or decrease) of power to twice (or one-half) the original value is a 3-db change.

3. Each change of power by ten times means a 10-db change.

4. Each change of voltage or current of 10 times is a 20-db change.

5. Our ears are not linear devices, but hear intensities according to the db change in power levels.

6. Where a reference level is not specified, .001 watt across 600 ohms is assumed. ("O" dbm is .001 watt.)

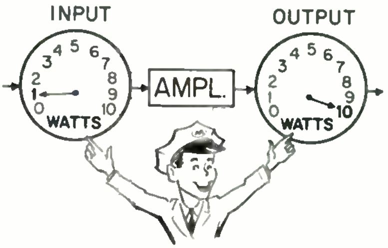

A 10-to-1 Increase in Power is a 10-DB Gain.

Selectivity Curves

Figure 10A illustrates several terms which are commonly employed in connection with selectivity curves. The horizontal scale is divided according to frequency, and at point "O" we find the center of the operating or reference channel being considered. Because the deviations of the operating channel extend 15 kc to each side of center, the "deviation bandwidth" is 30-kc wide.

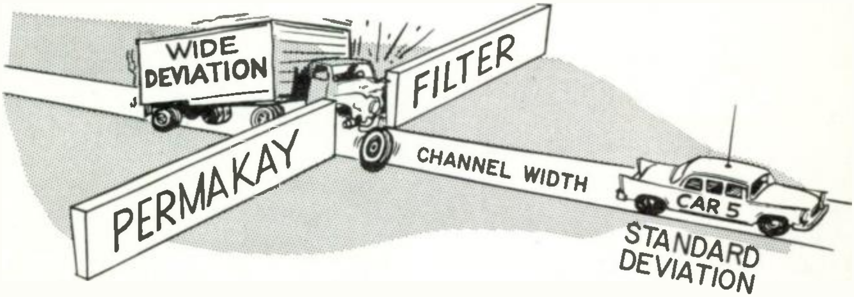

Excessive Deviation Cannot Pass Through the Permakay Filter.

The channel spacings are 40 kc apart, so the "adjacent channels" are found 40 kc above and below the center of the reference channel. The next channels are called the "alternate channels" and are found 80 kc above and below the reference channel frequency. The adjacent and alternate channels also have a deviation bandwidth of 30 kc, so this leaves a 10-kc spacing between the deviation limits of adjacent channels. This spacing is referred to as the "guard band".

Figure 10B shows the same channel assignments, the deviation being ±15 kc with a 10-kc guard band. (This is the present channel assignment for "low-band" communications which extends from 24 mc to 54 mc.) The selectivity curves of two receivers are included in figure 10B. The receiver with the "X" filter has an acceptance or operational characteristic which allows not only the desired channel frequencies to get through, but also those of the adjacent and the alternate channels. This receiver will not operate satisfactorily when there are transmissions on the other channels. The receiver with the "W" filter rejects all of the signals on the alternate channels, but there is some response to the deviations within the adjacent channels. Unless there are strong local signals on the adjacent channels, however, this receiver will operate satisfactorily. The "X" filter curve represents the typical response of a receiver incorporating only conventionally tuned circuits. The other receiver has a response curve for one particular Permakay filter, already discussed in this lesson.

Figure 10C shows the channel spacing for the new "split channel" operation, which has been authorized by the FCC and which will be placed into effect for the high-band, between 162 and 172 mc.[4] The former spacing of 60 kc has been cut in half, so there is but 30 kc between channel assignments. Furthermore, the deviation has been reduced to 5 kc, making the deviation bandwidth 10 kc. The guard band is then 20 kc.

The selectivity of the W filter discussed for figure 10B is shown in figure 10C. From the figure it is evident that the W filter will accept a considerable amount of energy within the adjacent channels. Thus, the W filter is not satisfactory for this mode of operation, and a filter having a greater amount of selectivity is needed. The desired adjacent channel rejection is indicated by the curve of the S filter--this Permakay filter has been designed to furnish the sharp selectivity required for split channel operation. Only those signals of the operating channel are accepted by the filter and passed on to the last IF amplifiers and discriminator.

A note of interest here is the additional requirements for the receiver and transmitter that operate on these extremely narrow channels. The receiver high-frequency oscillator must be extremely stable or a resulting intermediate frequency shift will be beyond the acceptance of the filters. In addition, the deviation at the transmitter must be under control or the deviation bandwidth will be excessive, spilling over into the adjacent channels. (Frequency drift in the transmitter is just as undesirable as in the receiver).

The curves of figure 10 are not complete in describing the filter since they do not specify the amount of attenuation taking place in the various channels. Unless we know how much the adjacent channel signals are attenuated we do not accurately know the effectiveness of the filter.

DB Ratings For Selectivity Curves

Figure 11 shows representative selectivity curves for two receivers having different de-

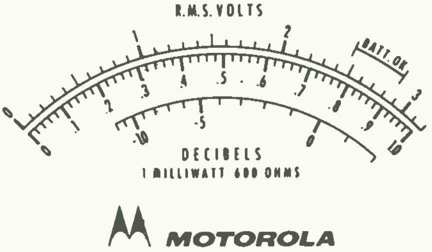

The DB Meter Dial Markings Are Actually Voltage Readings Calibrated According to Power Level.

---

[4] The FCC has since ruled that many of the channels in both the high band and low band will be converted to split-channel operation. See "Utilizing the New Split Channel Mobile Frequencies," and "The Split Channel Story."

grees of selectivity. The attenuation of the off-channel frequencies, to the left of the figure, is stated in decibels, and all comparisons relate to the strength of the signal at the center of the assigned channel. The same amount of signal is applied to the filter input at various frequencies; the output voltage is then measured and compared with the voltage produced at the center frequency. The ratio of the voltages is converted to the equivalent db rating and plotted on the graph. For comparison purposes the center frequency has zero attenuation, as shown at the bottom of the vertical scale. The higher we read on the vertical scale, the greater the attenuation.

The curve representing receiver No. 1 is relatively flat for frequencies up to 10 kc on each side of center, but at 15 kc it rises sharply and the attenuation is about 100 db. This means the receiver will satisfactorily reject all signals of the adjacent and alternate channels. The selectivity of receiver No. 2 is not as satisfactory as that of No. 1. The attenuation for the center of the adjacent channel is only 40 db. An attenuation of 40 db is a voltage ratio of only 100 to 1, insufficient to prevent a signal of reasonable strength from causing interference. Adjacent channel deviations receive even less attenuation, making the interference problem correspondingly greater. The 100-db attenuation of adjacent channel signals provided by receiver No. 1 represents a voltage ratio of 100,000 to 1 (see the graph of figure 9), and this is entirely satisfactory even in the presence of strong signals from transmitters operating on adjacent channel frequencies.

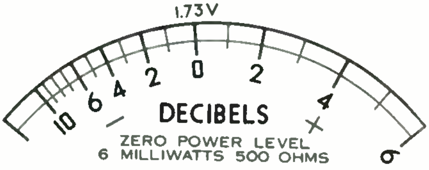

Some Meter Dial Scales Use 6 Milliwatt (.006 Watt) and 500 Ohms as the "0-DB" Reference.

Selectivity curves are occasionally drawn differently from the way they appear in figure 11. One method is to reverse the vertical scale, so that zero attenuation appears at the top and maximum attenuation at the bottom. The curves will be the same as in figure 11, but "upside down". In analyzing any attenuation curves or selectivity graphs, the important factors to note are the amount of attenuation and the frequency spread--unless these are well defined, the curves or graphs will have little significance.

The IF Amplifier Curcuit

The major requirements of the second IF amplifier section, as stated in the beginning of this

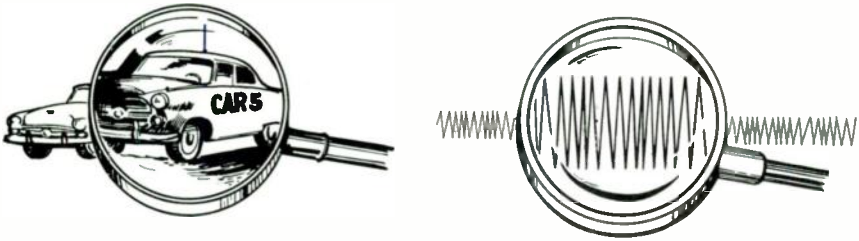

AMPLIFICATION "MAGNIFIES"

lesson, are to provide (1) a high degree of selectivity and (2) considerable amplification ahead of the limiters. By dividing these functions into separate operations, as performed by the Permakay filter and the IF amplifier strip, respectively, the requirements are realized most efficiently. We have studied the Permakay filter and its ability to provide a high degree of selectivity; we are now prepared to consider the second requirement --amplification.

The greatest portion of the receiver gain or amplification is realized in the three-stage IF amplifier strip following the Permakay filter (figure 12). This section of the receiver has more than sufficient gain to produce full saturation of the limiters on all signal input levels. Thus the second IF section provides a certain amount of "reserve gain" for the receiver. Reserve gain means that any normal reduction of amplification due to tube aging and similar causes will have no appreciable effect on the overall operation of the receiver.

Figure 12 shows a typical Motorola circuit. The three stages incorporate high-gain pentode type tubes. Since the filter has provided all the necessary selectivity, the IF amplifier strip may be designed for maximum gain and stability. Our only interest in selectivity at this point is to make sure that the tuned plate circuits which are used to obtain a higher gain are not too selective; otherwise they might reject some of the desired sidebands of the channel signal!

This IF strip does not differ materially from most well-designed high-gain voltage amplifier stages. Comparatively low plate and screen voltages, together with excellent decoupling, good design practice and parts placement, minimize the feedback, thus stabilizing the amplifier. The first amplifier stage uses cathode bias to insure maximum gain, but the second and third stages have grid-leak bias. Use of grid-leak bias produces some limiting action, particularly in the third stage in the presence of a strong signal. The negative voltage resulting from the grid-leak bias on this stage is often used as a source of negative AGC voltage, which is applied to the grid of the RF amplifier. (Grid-leak bias will be discussed in detail in the lesson on "Limiters", which follows).

In operation, the output of the filter is applied directly to the grid circuit of the first IF amplifier stage and the overall amplification of the IF strip is likely to be in excess of 1,000,000, representing a gain of at least 120 db.

IMPORTANT WORDS USED IN THIS LESSON

CRITICAL COUPLING: That amount of coupling between tuned circuits which allows for maximum output voltage, but which retains relatively sharp selectivity.

CUTOFF FREQUENCY: As applied to filters, the cutoff frequency is the midpoint between the attenuated band of frequencies and the passed band of frequencies.

DBM: A decibel reference level, in which .001 watts across 600 ohms equals zero dbm. All power levels may then be stated with respect to this 1 milliwatt reference.

DECIBEL: A standard unit of comparison between two levels of sound intensities or electrical power. A decibel is sometimes defined as "the smallest change of sound intensity that the human ear can distinguish."

FILTER: A frequency selective device in which certain frequencies are allowed to pass, but other frequencies are attenuated.

INSERTION LOSS: Attenuation of the desired signal in a passive filter; it is usually stated in decibels.

PASSIVE FILTER: A filter not having any internal amplifying device.

"PERMAKAY" FILTER: The registered trade mark given to the highly selective filter developed by Motorola and incorporated in the last IF section of a receiver in order to provide sharp selectivity.

Motorola Training Institute

4501 West Augusta Blvd., Chicago 51, Ill.
A DEPARTMENT OF MOTOROLA COMMUNICATIONS AND ELECTRONICS, INC.

Please PRINT or use STAMP.

Name ______________________________ **Student No.** ______

Street __________________ **Zone** ____ **Date** ______

City _______________ **State** ________ **Grade** ______

Examination, Lesson RA-5

1. The purpose of the second oscillator, mixer, filter and IF sections of a receiver is (choose two answers).

   A. To reject the image frequency. A. __________
   B. To prevent intermodulation. B. __________
   C. To reject adjacent channel signals. C. __________
   D. To provide high gain. D. __________

2. The incoming signal to the last oscillator-mixer of a receiver is 11 mc. In order to provide a second IF of 455 kc, the oscillator frequency may be either ______________________ or ______________________.

3. For the conditions of question 2, the image frequency operative at the last mixer may be either ______________________ or ______________________.

4. Why is it necessary for the selective receiver to have a response curve closely resembling that of Figure 2? (Check all correct answers).

   A. To reject adjacent channel signals. A. __________
   B. To accept all the signal deviations. B. __________
   C. To avoid distortion. C. __________
   D. To have high amplification. D. __________

5. What is the advantage of using a filter such as the Motorola PERMAKAY filter instead of tuned transformers as shown in Figure 3? (Indicate all correct answers).

   A. Tuning procedure less complicated. A. __________
   B. Better selectivity. B. __________
   C. Greater stability. C. __________
   D. Easy to adopt receiver to narrow band operation. D. __________

6. Indicate True or False after each of the following statements concerning filter design and operation.

   A. It is important that the impedances of the terminating circuits match the impedances of the filter. A. __________
   B. The "insertion loss" of a filter refers to the attenuation of undesirable signals. B. __________
   C. More tuned circuits in the filter means greater sensitivity. C. __________
   D. The filter provides most of the receiver's overall selectivity. D. __________

7. A power increase of 100 per cent means an increase of ______________________ db.

8. The signal input to a receiver is 0.6 microvolt (uv) and the front end has a gain of 40 db. What is the output voltage?

   A. 60 volts ______________________ C. 0.0006 volt ______________________
   B. 600 microvolts ______________________ D. 0.00006 volt ______________________
   E. All of these are incorrect; the answer is ______________________.

9. The operating frequency of a receiver is 151.55 mc. With 40-kc assignments.

   A. The adjacent channels are ______________________ and ______________________.
   B. The alternate channel frequencies are ______________________ and ______________________.

10. Underscore the correct words in the following:

    Figure 12 is the schematic diagram of a (high)(low) gain (IF)(RF) amplifier. The main purpose of the amplifier is to provide (selectivity)(gain) for the receiver. The tuned circuits are adjusted for (maximum)(minimum) signal at the following stage.

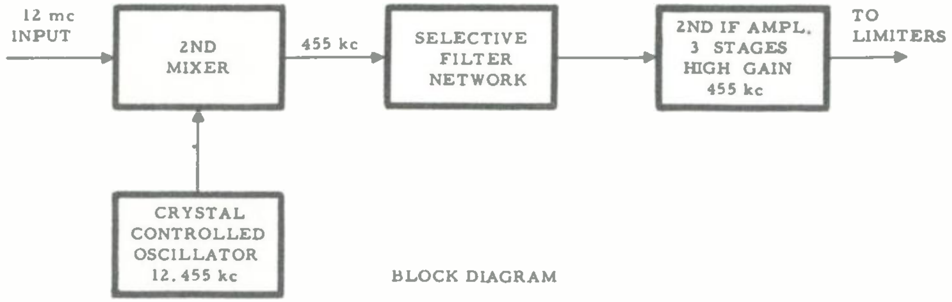

BLOCK DIAGRAM

FIGURE 6

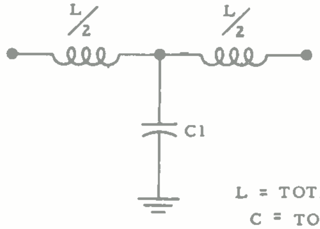

L = TOTAL INDUCTANCE
C = TOTAL CAPACITANCE

"T" FILTER

FIGURE 7A

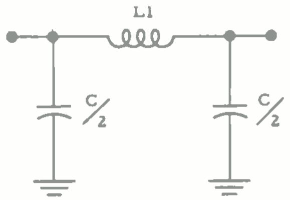

"PI" FILTER

FIGURE 7B

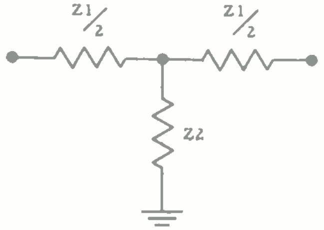

FIGURE 8A

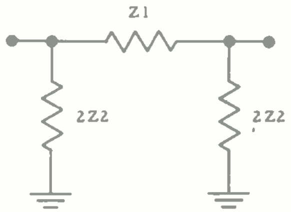

FIGURE 8B

STUDENT NOTES

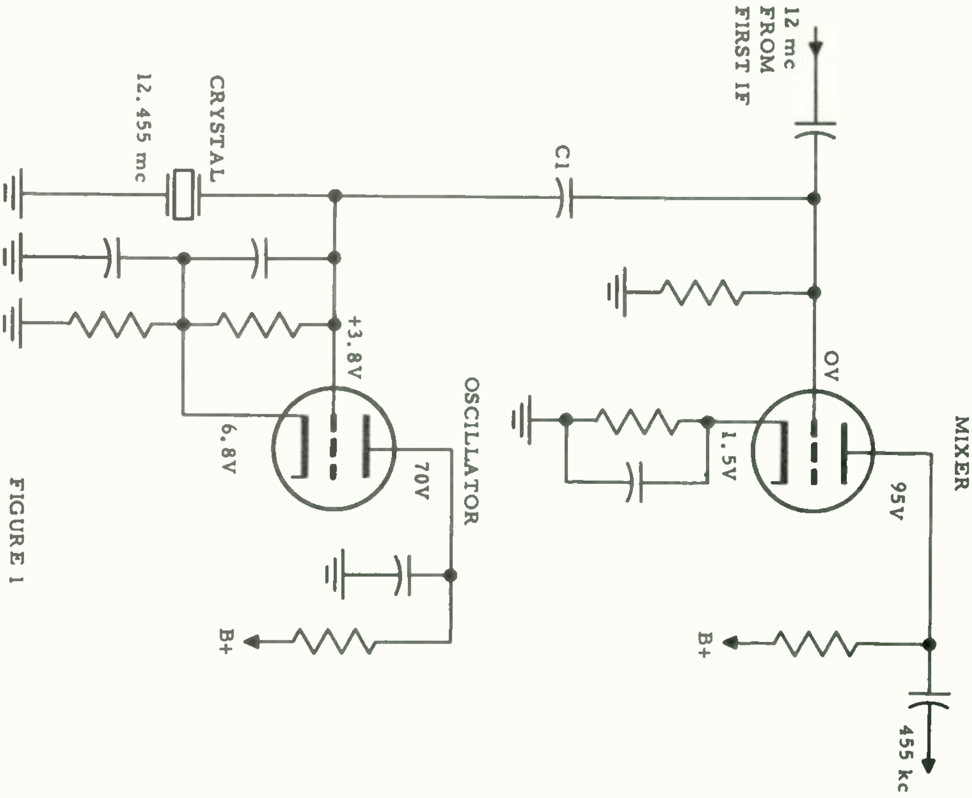

FIGURE 1

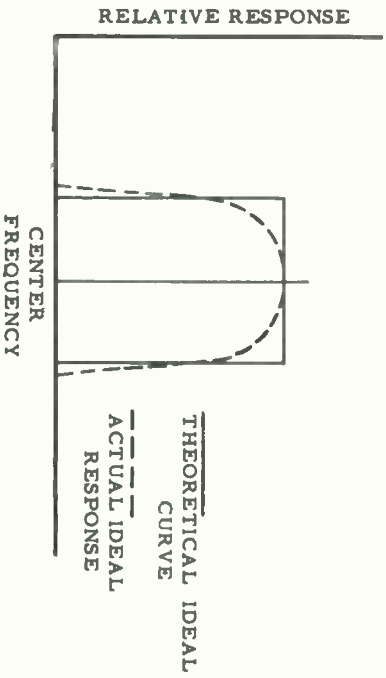

IDEAL SELECTIVITY CURVES
FIGURE 2

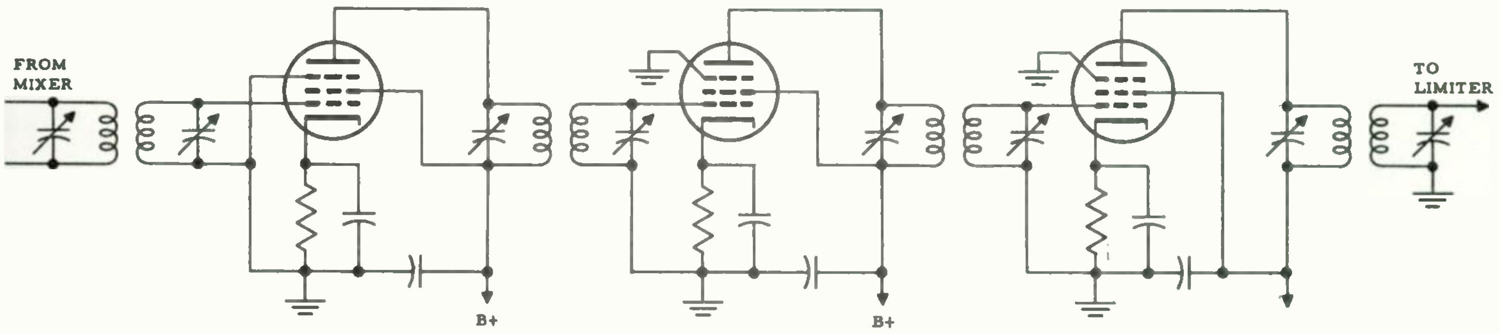

IF AMPLIFIER
FIGURE 3

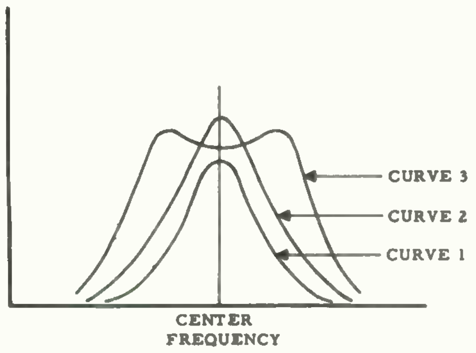

TRANSFORMER COUPLING CURVES
FIGURE 4

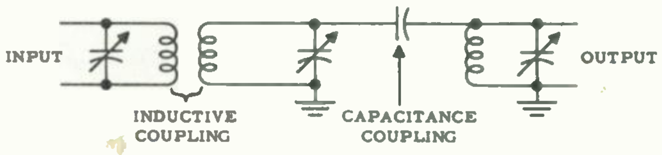

"TRIPLE TUNED" TRANSFORMER
FIGURE 5

STUDENT NOTES

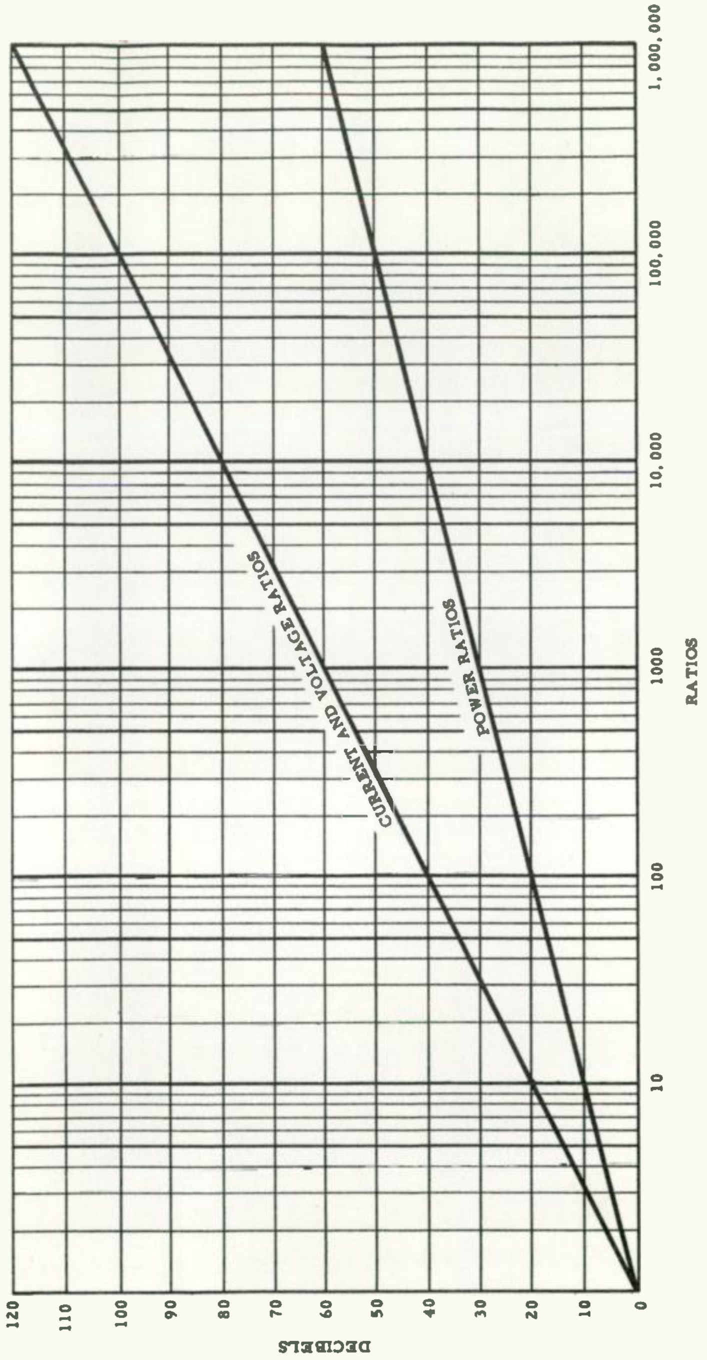

FIGURE 9

DEFINITIONS

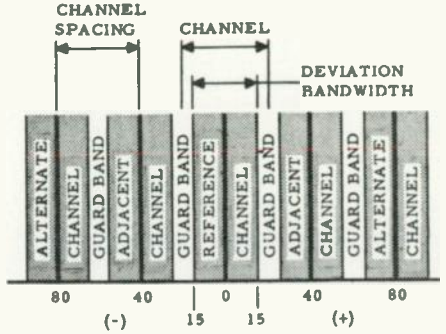

FIGURE 10A

40KC CHANNEL SPACING
±15KC DEVIATION

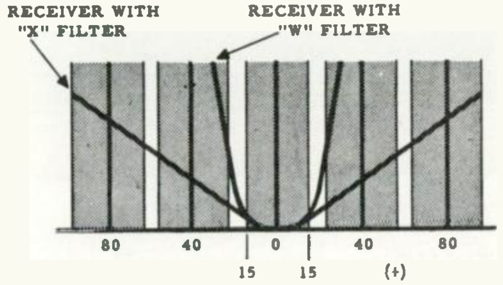

FIGURE 10B

30KC CHANNEL SPACING
±5KC DEVIATION (SPLIT CHANNEL)

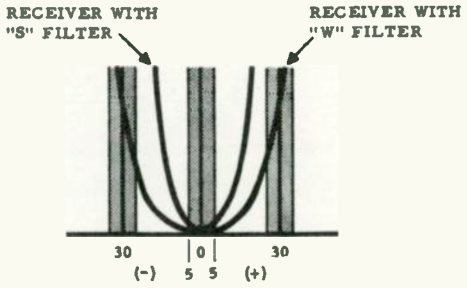

FIGURE 10C

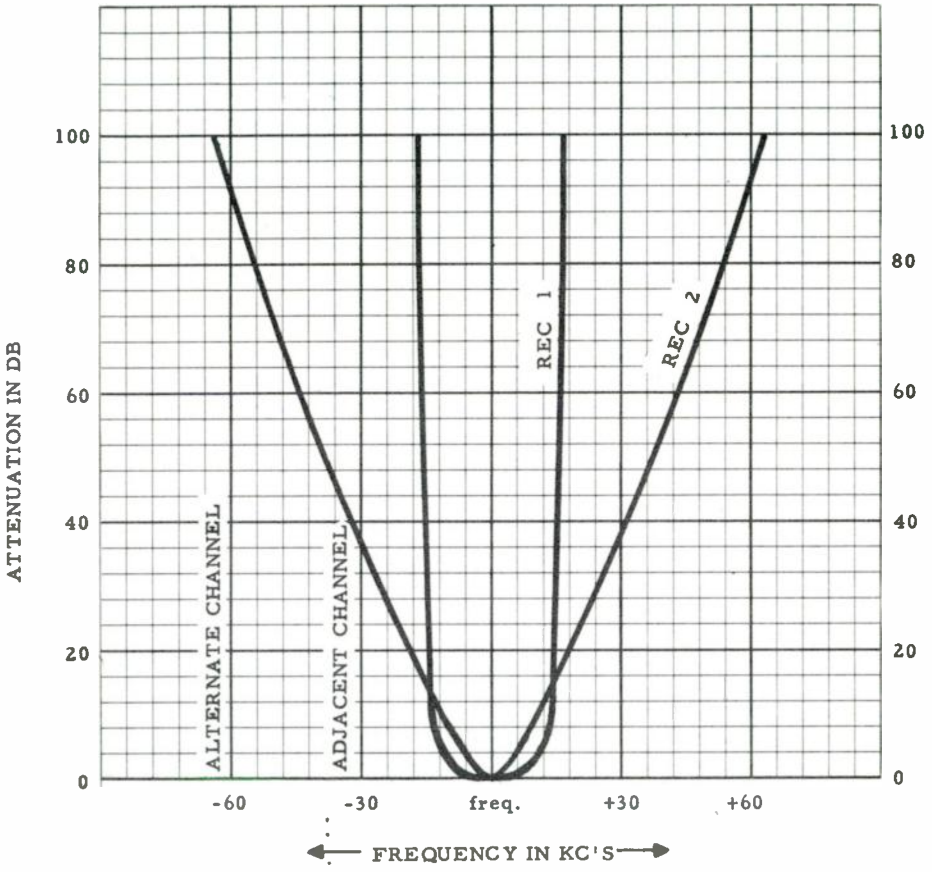

FIGURE 11
OVERALL RECEIVER
SELECTIVITY

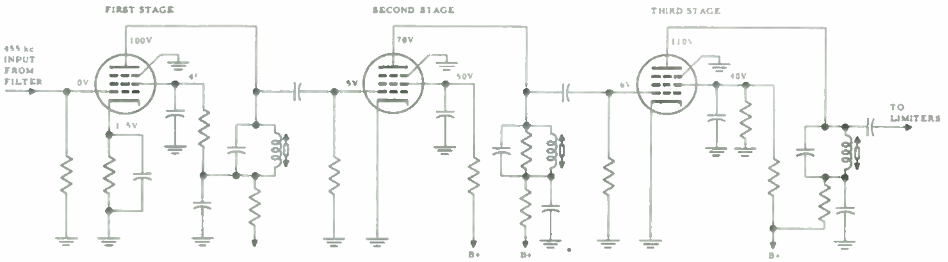

IF AMPLIFIERS - 455 kc
FIGURE 12

national

MOTOROLA

RADIO COMMUNICATIONS

service

A TWO-WAY RADIO COMMUNICATIONS TRAINING PROGRAM

LESSON RA-6
FM RECEIVERS

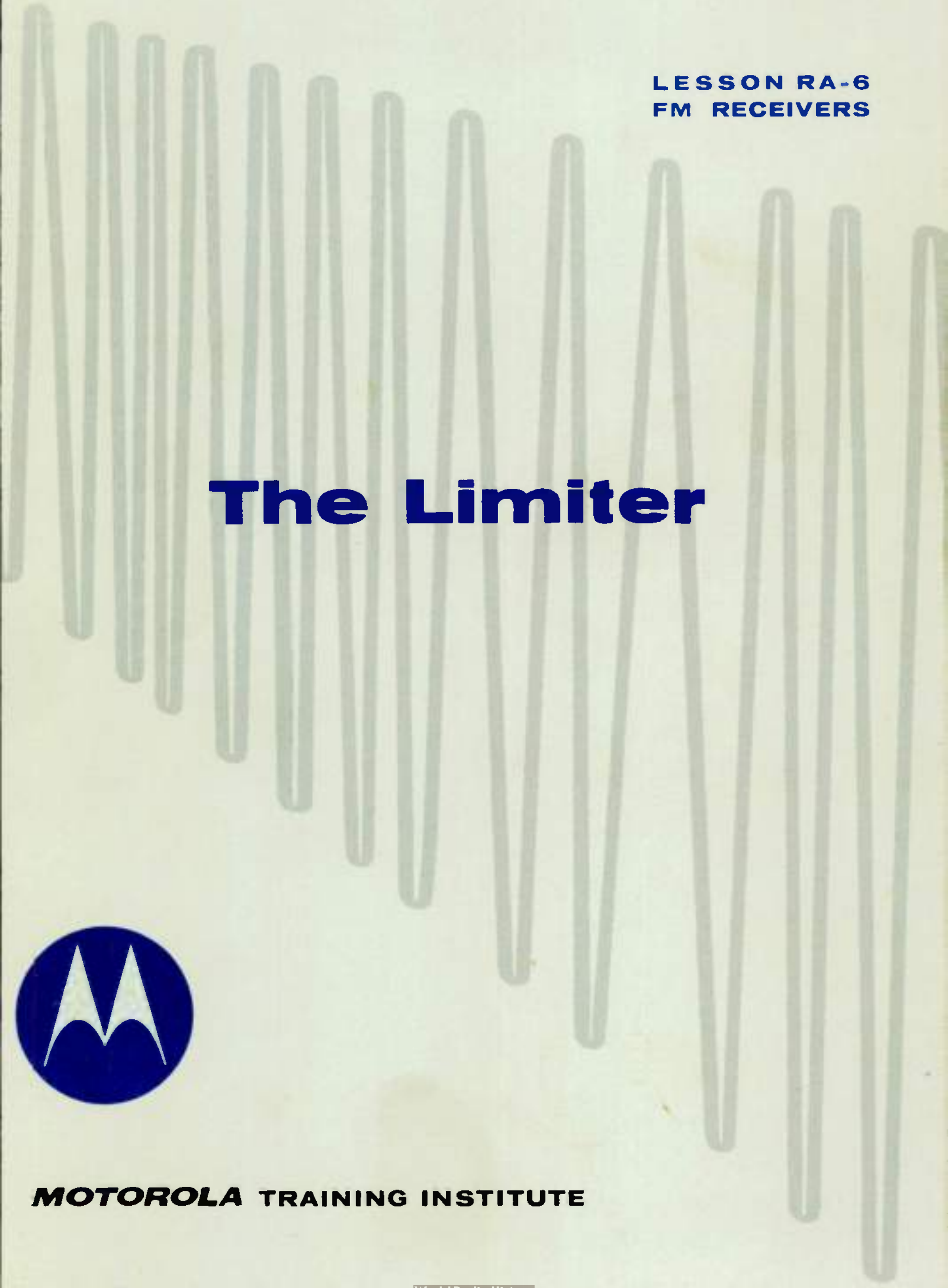

The Limiter

MOTOROLA TRAINING INSTITUTE

A TWO-WAY RADIO COMMUNICATIONS TRAINING PROGRAM

LESSON RA-6
FM RECEIVERS

The Limiter

—one of a series of lessons on two-way FM communications—

MOTOROLA TRAINING INSTITUTE
4501 W. AUGUSTA BLVD., CHICAGO 51, ILLINOIS
APPROVED BY THE STATE OF ILLINOIS
DEPT. OF REGISTRATION AND EDUCATION

PREFACE

This is one lesson of a complete Motorola Home-Study Course which presents to the Service Technician both the principles of operation and the maintenance of two-way FM radio systems. The program covers mobile, portable and base station equipment, including the latest transistorized units.

THE LIMITER

LESSON RA-6

TABLE OF CONTENTS

NOTICE

Diagrams and figures referenced in text are "fold-outs" in back of each lesson, for use while studying. The Examinations are also there.

On-the-spot reporting of news events, sports and other public affairs is made possible by lightweight hand-carried "Handie-Talkie" transmitter-receiver units right at the scene of action. As emergency devices they may also be used for coordinating traffic or crowd direction or for summoning medical or other aid.

THE LIMITER

Lesson RA-6

Introduction

The noise-free reproduction of weak signals by the FM communications receiver is made possible by the operation of its limiters. While the discriminator is designed to respond to the incoming deviations of the applied signal, it is also sensitive to amplitude variations--and the dominant characteristic of all noise energy is its amplitude irregularity. Thus, by providing a signal of constant amplitude to the discriminator, the limiter makes possible the relatively noise-free reception of FM signals.

Limiter Action -- General

Figure 1 illustrates the effect of the limiter on the FM waveform. The incoming signal at the left contains many irregular amplitude variations in addition to the desired frequency modulation. Most of the noise energy is concentrated on the peaks of this signal. To eliminate this noise energy from the signal, the peaks of both the positive and negative portions of the signal must be removed before the signal reaches the discriminator.

At the right in figure 1, we see the output waveform, represented by pulses of plate current. Only a small portion of the positive half-cycle of the incoming signal is reproduced in the output--the entire negative half-cycle and the peaks of the positive excursions have been eliminated.

The limiter has upper and lower limits, as represented by the aperture in the figure--regardless of the amplitude of the applied signal, the output can never exceed these limits. For proper operation, however, it is essential to provide a signal of high amplitude into the limiter. Otherwise the waveform may not be clipped to any great degree, and considerable noise will still reach the discriminator.

The desired limiting action, as illustrated by figure 1, may be secured by various means; (1) diodes can be inserted in the signal path so that they become conductive when the output voltage is at the predetermined value; (2) a large resistor can be placed in series with the signal input to the grid to attenuate the positive peaks of the input signal, allowing at the same time the negative peaks to pass unaltered; (3) a plate -- or "saturated" -- limiter can be used. Because almost all FM communications receivers use this last type of limiter, it is the only one we shall discuss in this lesson.[1]

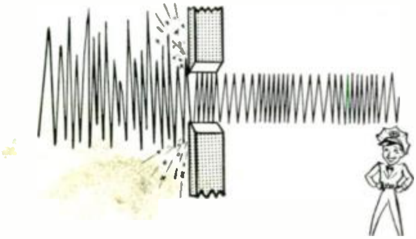

When a "Strong" Signal is Applied to the Limiter the Output Has a Constant Amplitude. This Means that the AM Noise Has Been Eliminated.

The Plate Limiter

The plate limiter is characterized by; (1) the use of low plate and screen voltages, and (2) grid-leak bias. The term "plate limiter" is descriptive of the requirement that each incoming FM wave must cause the limiter to operate between plate saturation and cutoff. The alternate term--"saturated limiter"--is even more descriptive, as we shall see.

The incoming signal, in order to "drive" the limiter to full saturation, must have a very high amplitude -- the higher the better. Most limiters reach the saturating point when a signal of about two or three volts is applied. Assuming that the weakest signal to be received measures 0.5 microvolt at the antenna, the total amplification preceding the limiter must be at least 4,000,000 in order to provide a two-volt signal at the limiter. This is a minimum gain of 132 db (1,000,000 is 120 db, and 4 is 12 db).

Even when the signal applied to a limiter is strong enough to cause saturation, there is some noise energy remaining in the output. To secure additional noise reduction or limiting--it is not possible to have too much--most communications receivers include two or more limiters in "cascade." (Cascade means that the output of the first stage is applied to the input circuit of the second stage.)

The Limiter Circuit

The typical pentode limiter shown in figure 2 uses a grid resistor and capacitor to provide grid-leak bias, and large resistors in the plate and screen circuits to reduce the operating voltages to a low value. Because of the low plate and screen voltages--usually about 50 or 75 volts--only a small change in grid voltage is required to swing the plate current between saturation and cutoff. The plate current cannot increase beyond maximum (saturation), nor can it decrease to less than zero (cutoff). Thus, all plate-current pulses have the same amplitude and, since each cycle of grid voltage produces one pulse of plate current, these plate-current pulses correspond in frequency with the frequency of the incoming signal.

---

[1] See TM 11-668 FM Transmitters and Receivers, pages 155-156; also FM Transmission and Reception, by Rider and Usland, pages 277-280.

The grid resistor-capacitor combination plays an important part in the operation of the limiter because of the automatic bias it supplies. In the absence of any signal (or noise), there is no bias. As soon as a signal is applied, however, the grid becomes negative as a result of the bias developed by the grid capacitor and resistor, and the amount of bias changes automatically according to the strength of the signal. This subject of grid-leak bias is discussed in detail later in this lesson, but it is introduced at this point because it is necessary to know that the amount of bias is determined by the strength of the incoming signal. Figures 3A, 3B, and 3C represent limiter operation for different values of signal input, indicating the degree of bias developed in each case.

In figure 3A the signal is weak, and the resulting grid-leak bias is somewhere near the straight portion of the plate-current curve. The amplitude of the signal is insufficient to swing the grid either to the point of plate-current cutoff or beyond the point of saturation. The output plate-current pattern is a reasonable reproduction of the grid-voltage waveform, and the stage provides some amplification. The limiter stage may thus operate as an amplifier for very weak signals. (This condition is not likely to exist in the modern, sensitive FM communications receiver, however, for the amplification preceding the limiter is such that the input will be greater than that of figure 3A.)

In figure 3B the signal is somewhat stronger, and this stronger signal produces a larger bias--near cutoff. During the negative portion of the input signal, the negative grid voltage is greater than the cutoff value and there is no plate current. Plate current takes place during the positive portion of the RF cycle, but the positive peaks are clipped, due to plate current saturation. When the limiter is operated in this manner-- with part of the cycle missing in the output waveform--noise voltages occuring during this "clipped" time are eliminated. This clipping action is good, but for our purpose it is not good enough. For best limiting action, the applied signal must be greater than that shown in figure 3B.

In figure 3C the input voltage is much stronger. The bias is well beyond plate-current cutoff and plate current does not take place during any portion of the negative alternation. In fact, plate current occurs during only a small portion of the positive alternation, and the positive peaks are severly clipped. This is the normal operating condition for a limiter employing grid-leak bias.[2] Let us see, now, how this grid-leak bias works.

Grid-Leak Bias Operation

In the absence of a signal or noise voltage at the grid, there is no grid-leak bias. As soon as a signal (or noise voltage) is applied, the grid becomes negative. The amount of this negative bias is

---

[2] See TM 11-668 FM Transmitters and Receivers, pages 156-158; also FM Transmission and Reception, by Rider and Uslan, pages 280-292; also TM 11-672 Pulse Techniques, pages 17-20.

variable, being determined at all times by the strength of the signal. This incoming signal, being AC, is continually changing polarity.

Figure 4A represents grid-leak operation during the positive alternation of the incoming signal. This positive voltage drives the grid positive with respect to the cathode, and the grid draws current from the cathode. This current charges the grid capacitor to a value nearly equal to the positive peak voltage of the applied signal, making the grid negative. (The charging path and direction are indicated by the arrows.) A small part of the charging current can pass through the grid resistor, since it is in parallel with the tube, but most of the current passes through the tube, which offers very low resistance when it is conductive. Because of this low resistance path, the capacitor charges rapidly.

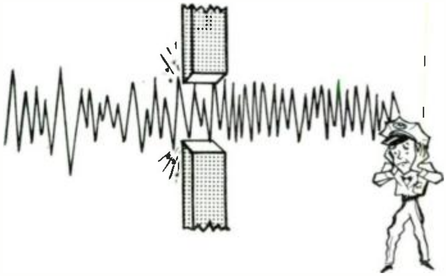

If a "Weak" Signal Reaches the Limiter, Some Amplitude Variations Remain in the Output Waveform and Noise will Still be Heard in the Output.

Figure 4B represents the circuit during the negative alternation which follows. The negative signal voltage and the negative charge on the capacitor are in series and the resulting strong negative voltage is applied to the grid, making it highly negative with respect to the cathode. Since there can be no current between the grid and cathode, the capacitor must discharge through the grid resistor; since the resistance of this path is comparatively high, the capacitor discharges slowly.

The conditions shown in figure 4A are repeated on the next alternation, when the signal is again positive, but this alternation finds the grid capacitor still partly charged. The positive signal voltage opposes the charge retained by the capacitor, and the total grid voltage is now the difference between these two voltages. This difference in voltage is negative at the beginning of each alternation, while the signal is building up. Only when the signal nears the peak of its positive swing will it exceed the charge on the capacitor and cause the grid to again become positive. The grid then draws current, but only for a short period of time, and once more charges the capacitor.

Because the signal drives the grid positive during some portion of each cycle and replenishes whatever charge has leaked off the capacitor during the remainder of the cycle, the capacitor accumulates a relatively constant voltage which becomes the "grid-leak bias".

The strength of the incoming signal determines the amount of bias, which must automatically change in value according to the strength of the signal. Another important feature in the operation of grid-leak bias is its effect upon the average plate current. Without any bias the plate current is high--plate current occurs continuously. With a signal, however, the grid is biased to class C and plate current occurs during only a short portion of each cycle. The average plate current is thus reduced. The screen grid current also decreases and for the same reason. With reduced current, the voltage drop across the plate and screen resistors also decreases. The plate and screen voltages must then increase, for they are determined by the "IR" drop of the resistors.

Let us again look at figure 3C, which represents the normal operating condition for a limiter employing grid-leak bias. The incoming signal, shown at the bottom of the figure, has appreciable amplitude and the bias is considerably beyond plate-current cutoff. Plate current does not take place during any portion of the negative alternation, but when the signal swings positive, plate-current pulses occur. At the moment the grid voltage reaches point A on the curve, plate current starts; as the grid voltage swings to the right, plate current increases to a maximum value, at point B. The grid voltage curve continues still further to the right, but plate current cannot increase further as it is already at maximum. The grid voltage next reverses direction, moving to the left. At point B' plate current starts to decrease, reaching zero at point A'. Thus, for each positive excursion of grid voltage, plate current starts at zero and increases to maximum, remains at maximum for a period of time, and finally decreases once more to zero.

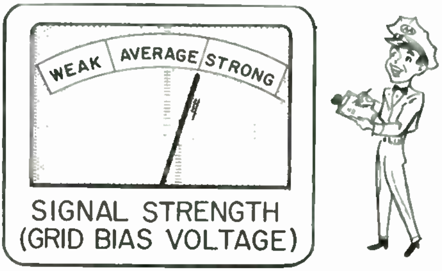

A Meter Placed in the Grid Circuit of the Limiter Indicates the Relative Strength of the Applied Grid Voltage, Whether it be Signal or Noise.

Although most of the noise energy tends to concentrate near the peaks of the incoming signal to the limiter, noise is continuous in nature and occurs during the entire portion of the signal waveform. Thus, while good noise reduction is effected by clipping the positive and negative peaks from the signal, it is also important that the noise occuring during the remainder of the cycle does not reach the discriminator. This is realized by minimizing the time it takes for the limiter plate current to change from cutoff to saturation and from saturation back again to cutoff.[3]

---

3. See TM 11-662 Theory and Applications of Electron Tubes, page 124.

Saturation and Noise Reduction

Figure 5A shows one complete cycle of RF grid voltage, with noise present; figure 5B shows the corresponding plate-current pattern.

Because of its low amplitude, the RF input of figure 5A does not cause ideal limiting action; much of the noise, which is present as an amplitude modulation of the RF, is also present in the plate current (figure 5B). Points A and B on the curve correspond to points A and B in figure 3C. Plate current starts at point A and increases to maximum at point B. During this period of plate-current increase, any noise modulations which are present will appear as variations in the plate current. In a similar manner, the plate current is decreasing between points B' and A', and noise voltages can also get through to the plate circuit during this period. Either of these two periods of time (between A and B or between B' and A') can be thought of as a "gate" which is open to plate-current variations, during which time the tube will accept noise fluctuations. It thus becomes important to shorten the time it takes for the plate current to change from A to B and from B' to A'. Figure 5A also shows several noise pulses falling below the saturation level (between points B and B' on tne curve). These noise voltages, which are present on the positive peaks, also produce variations in plate-current. The plate current pattern of figure 5B shows that noise pulses occur, (1) during the periods of plate-current increase and decrease, and (2) during the period when plate-current should remain at the saturation level.

The waveform of figure 6A is similar to 5A but its amplitude is considerably higher. The difference in amplitude between A and B is restricted to a much shorter period of the cycle; it takes less time for this voltage to change from A to B and from B' to A'.

The gate which was opened to plate-current variations in figure 5A is open for only a short interval in 6A. With the gate open for a shorter period, less noise energy can get through to the plate circuit. Also, noise voltages on the positive peaks in figure 6A are far beyond the saturation level and cannot cause any changes in plate-current. The plate-current pattern of figure 6B shows, (1) very abrupt plate-current changes between zero and maximum, and (2) a steady current for a considerable time. The noise present in figure 6B is considerably less than that in 5B.

While the application of strong signals to the limiter will result in good limiter action and noise reduction, a single limiter stage is generally unable to reach full saturation and provide satisfactory noise reduction when the incoming signal is weak. For this reason, most FM communications receivers employ two limiters in cascade.

Cascade Limiters

A typical Motorola circuit, employing two limiter stages, is shown in figure 7. Resistance coupling between the stages eliminates the use of a transformer, which is always difficult to align where the limiters are in saturation and the adjustment of the circuits to resonance do not cause any additional increase in output voltage. Low values of supply voltage and grid-leak bias are used in both stages and the operation of each is similar to that just described.

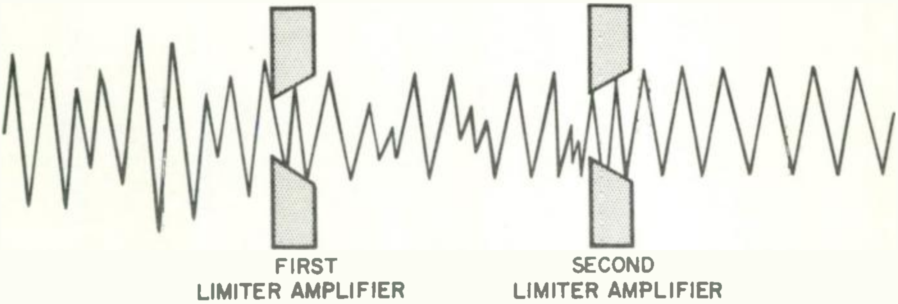

Two Limiter Stages are Usually Employed in the FM Communications Receiver to "Wipe Off" all Amplified Modulation from the Signal to the Discriminator.

The first limiter, with no signal applied, has an initial bias of approximately 25 volts due to noise. With a signal applied, this bias will increase. The stronger the signal, the higher the voltage produced, until the point of maximum bias-- about 60 volts-- is reached. At this point, the maximum possible signal will be reaching the grid, due to saturation in the plate-circuit of the preceding stage.

The second limiter, with noise applied, has an initial bias of approximately 20 volts. With a signal applied, a bias does not noticeably increase. This indicates that the plate of the first limiter is already saturated by the noise, and the signal produces little or no increase in voltage from this stage. The signal voltage merely replaces the noise voltage in the output.

Strong signals are limited to some extent even before they reach the first limiter. It will be recalled that the last IF stage does not use cathode bias, but has a grid-leak arrangement which provides some limiting action. When a signal is strong enough to exceed the straight portion of the operating curve, reaching the points of cutoff and saturation, the IF stage operates as a limiter so that, in effect, the receiver has three "limiters" on strong signals.[4]

---

[4] See TM 11-668 FM Transmitters and Receivers, pages 157-158; also FM Transmission and Reception, by Rider and Uslan, pages 290-292.

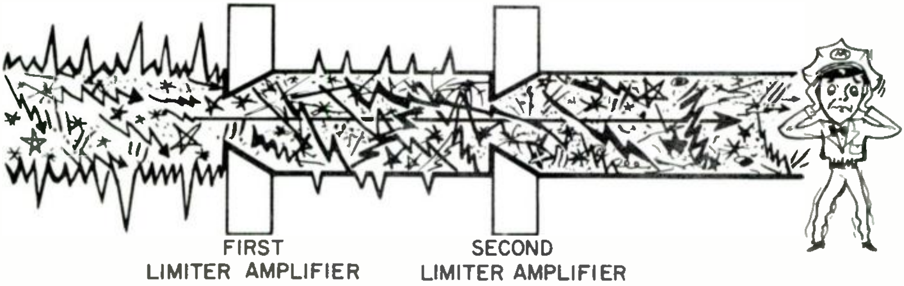

The Output Voltage of the Second Limiter Always has the Same Amplitude. In the Absence of a Signal this is "Noise" Voltage.

The Limiter Output -- No Carrier Present

While we know that the output of the limiter section of the FM communications receiver has a constant amplitude, it is well that we investigate the nature of its waveform in the absence of a signal.

Because of the very high gain of the entire receiver, particularly in the last IF section, the small noise voltages generated in the RF stage become large voltages at the limiter. For this reason, the last limiter is always in a state of saturation. Thus, the limiter output, despite the absence of a signal, consists of noise voltages having a constant amplitude. When this waveform is applied to the discriminator the receiver becomes very noisy. This noise output from the discriminator is mainly due to the irregular frequency pattern of the waveform rather than to any amplitude changes.

The Limiter Output -- Carrier Present

When a carrier is received, it "replaces" the noise energy in the output of the limiter. Because of the amplitude-limiting ability of the stage, the noise energy in the plate circuit of the last limiter is reduced. Instead of the irregular noise pulses, the plate current pulses now correspond to the last IF frequency. These pulses of plate current through the primary of the discriminator transformer (tuned to the IF center frequency) cause an oscillatory current within the tuned circuit and a sine-wave voltage results. This circulating current will also occur for frequencies slightly above and below the center frequency (deviations). Thus, the signal applied to the discriminator; (1) is a sine wave of constant amplitude, (2) is noise free, and (3) contains the same deviations as the incoming signal to the limiter.

The completeness by which the signal replaces the noise voltage at the limiter output depends primarily upon the strength of the signal itself; strong signal voltages produce a more complete noise reduction than do weak signals. The exact amount is usually referred to in terms of the resulting "quieting."

Receiver Quieting

As we have already said, when a carrier is received the noise energy at the limiters is "replaced" by the signal--the completeness of this action depends upon the carrier amplitude. The degree to which the noise is reduced is usually referred to as quieting, and is often used in measuring the effective sensitivity of a receiver. Specifically, we use "20-db quieting" in determining the receiver sensitivity. This refers to a 90% reduction in the noise voltage present at the receiver output before the carrier is received. The incoming carrier causes a noise reduction at the limiters, and when the noise voltage, measured at the speaker, is attenuated to 10% of its original value, the noise is 20 db down. (20 db is a 10 to 1 voltage ratio.)

There is no specific minimum amount of quieting necessary in order to understand a message, for, in addition to noise quieting, "readability" depends upon other factors. The ambient noise at the receiver, the experience of the operator and his ability to anticipate what is being said, and the ability of the receiver and speaker to provide full output over the entire voice range of 300-3000 cycles are just a few of the things which must be considered. With 5-10 db of quieting some noise is still apparent, but the message is usually readable. It takes 20 db of quieting, however, before uncomfortable noise is reduced to a fairly low level. At 30-db the noise has been reduced still further--to the point of inaudibility.

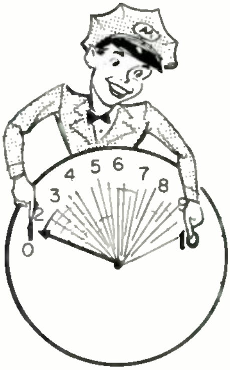

20 DB of Quieting is Realized When the Noise Voltage Reaching the Speaker has been Reduced to One-Tenth Its Original Value.

Metering the Limiter

The negative grid-leak limiter voltages are very useful, both to the operation of the receiver, and to the serviceman who makes use of these voltages in his daily work. As far as the receiver is concerned, negative voltages at the limiter grids are used (1) as a source of AGC controlling voltage--already discussed in a previous lesson, and (2) as a negative reference voltage in squelch operation--to be discussed in one of the next assignments. The serviceman finds two important uses for the negative voltages at the limiter. First, this voltage, as determined by the strength of the incoming signal (up to the point of saturation), becomes a convenient method of determining the relative gain of the entire receiver. Second, this voltage becomes a convenient "output meter" for the entire front-end of the receiver in alignment procedures. Up to the point of saturation, this voltage may be monitored, and the tuned circuits of the preceding stages adjusted to resonance.

Figure 8 shows a typical metering arrangement incorporated in FM communications receivers for the purpose of measuring grid-leak bias. The manufacturer specifies the sensitivity of the meter, usually a 50 micro-ampere movement. The required series-connected resistor is mounted directly on the tube socket, and the meter is protected from RF by means of the bypass capacitor. A plug is provided for connecting the meter to the receiver.

Summary

Amplitude modulation, particularly noise energy, is eliminated from the FM signal by the operation of limiters ahead of the discriminator stage. With low operating voltages on the plate and screen grid, plate-current saturation takes place rapidly. Grid-leak bias is used to operate the tube on the desired portion of the characteristic curve for all levels of applied signals.

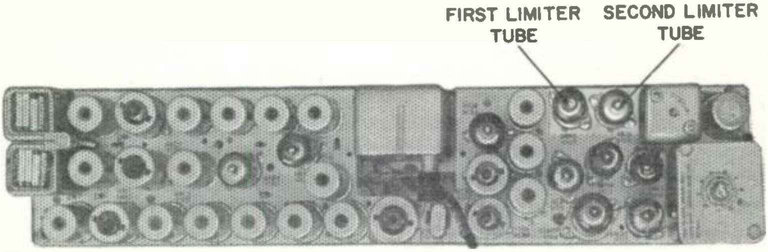

This Photo Shows the Location of the Limiter Stages of a Typical Motorola Receiver.

To obtain good limiting action, the amplitude of the input signal to the limiter must be appreciable--there must be a high order of amplification in the stages which precede the limiter. Limiting action, by removing both positive

Motorola Training Institute
4501 West Augusta Blvd., Chicago 51, Ill.

Please PRINT or use STAMP

Name ______________________________ **Student No.** ______

Street __________________ **Zone** ____ **Date** ______

City _______________ **State** ________ **Grade** ______

EXAMINATION LESSON RA-6

1. The ability of a limiter stage to eliminate amplitude modulation and reduce noise in the FM receiver is dependent upon a strong signal entering the limiter.

TRUE ______________ FALSE ______________

2. The plate limiter reduces amplitude variations by: (choose only one answer)

A. Cutting off the negative half cycle of the signal. A. ______
B. Cutting off the positive half cycle of the signal. B. ______
C. Eliminating both the positive and negative peaks. C. ______
D. Using only the negative portion of the signal. D. ______

3. A receiver has a sensitivity of 1 microvolt. The limiter requires a signal of 3 volts for normal operation. The net gain of the receiver ahead of the limiter should be at least:

A. 1,000,000. A. ______
B. 300,000. B. ______
C. 333,333. C. ______
D. 3,000,000. D. ______

4. The voltage between the plate and cathode of a limiter stage is usually about ______________ to ______________ volts.

5. In figure A below, across what component is the bias voltage developed under normal operation? ______________ Indicate the polarity of the voltage across this component.

6. For a given limiter circuit the bias is determined mainly by the (amplitude) (frequency) of the signal applied to the grid. Noise voltages (will) (will not) cause bias voltage at the limiter grid.

7. Saturation may be detected by using a meter in the grid circuit of a limiter. The symptom is that ______________________________.

8. For figure A below (limiter), in normal operation (signal being received) the plate current will be (continuous) (a series of pulses). The output signal will have a (constant) (changing) amplitude and will correspond to the (RF) (IF) (audio) frequency.

9. The complete RF waveform in the output of a limiter may be restored by using a ______________.

10. The unit of measurement commonly used to indicate the amount of noise reduction by the operation of the limiter is the ______________________________.

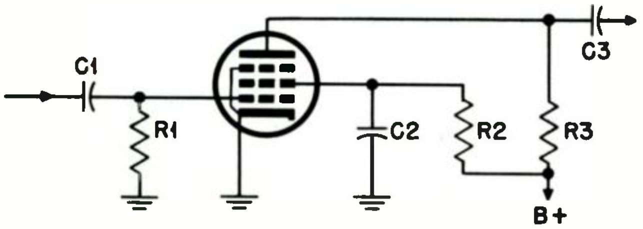

FIGURE A

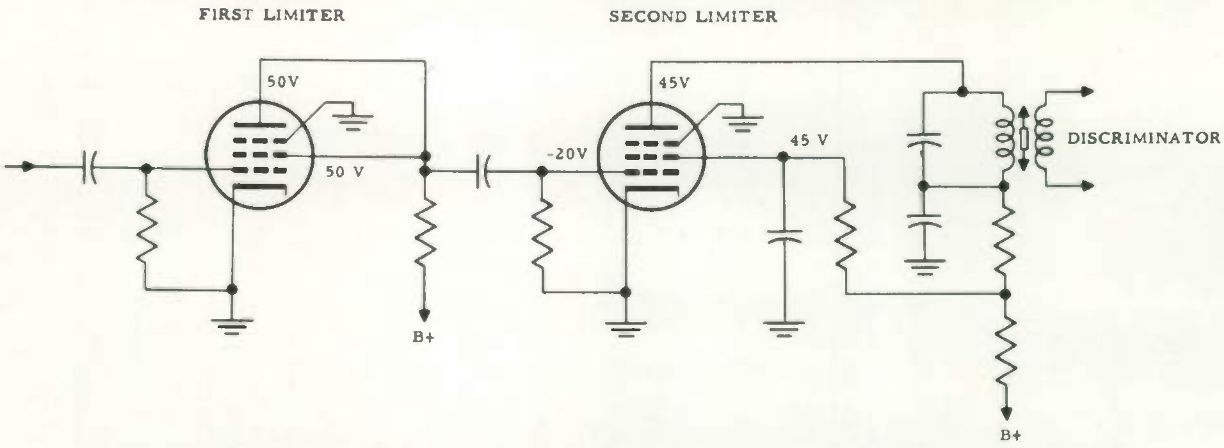

TWO STAGE LIMITER
FIGURE 7

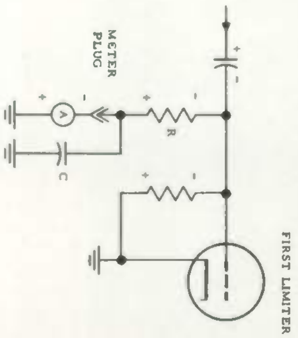

LIMITER METERING CIRCUIT
FIGURE 8

and negative peaks from the signal, eliminates most noise voltages from the signal.

At least two limiters in cascade are necessary for positive limiting of all signals.

Strong signals saturate the limiter. After limiters reach a condition of saturation, the output voltages no longer increase with signal strength. A constant grid-leak bias at any grid circuit means that the plate circuit of the preceding stage has reached saturation.

The last limiter stage in a high-gain communications receiver is saturated with or without a signal. Without a signal the noise voltage output has a nearly constant amplitude. A signal replaces the noise in the output (noise quieting)--the amplitude remaining constant.

IMPORTANT WORDS USED IN THIS LESSON

CASCADE: Two or more stages arranged so that the output of one is applied to the input of the next stage.

GRID-LEAK BIAS: A biasing method whereby the grid is made negative by an amount dependant upon the strength of the applied signal. An RC combination in the grid circuit develops this biasing voltage when the signal drives the grid positive with respect to the cathode.

PLATE LIMITER: The stage immediately preceding the discriminator, the plate limiter provides an output having a constant amplitude. A strong input signal is required to swing the limiter plate current between cutoff and saturation, thereby limiting the signal amplitude and providing good noise quieting.

QUIETING: The decrease in noise reproduced by the FM receiver when a signal is received. Receiver quieting is the result of limiter action.

SATURATION: An operating condition of a vacuum tube in which the plate current is a maximum value for the established operating voltages and plate load. Once a tube has reached saturation, the plate current cannot increase further, regardless of signal amplitude.

20-DB QUIETING: A standardized term in two-way communications, this amount of quieting is used in conjunction with the specified receiver sensitivity. Thus, sensitivity may be stated as the minimum signal voltage, at the input terminals of the receiver, required to produce a 20-db reduction (a 10 to 1 voltage ratio) in noise at the receiver output. (See QUIETING.)

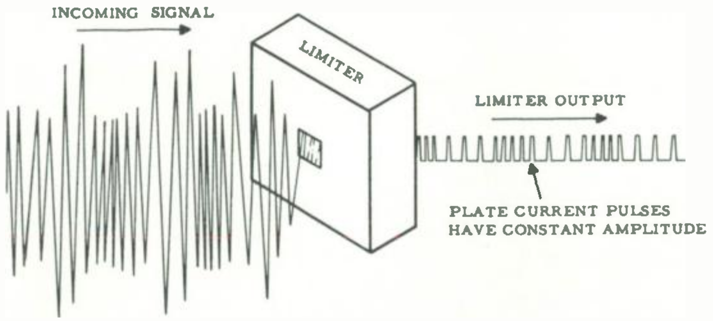

LIMITER ACTION
FIGURE 1

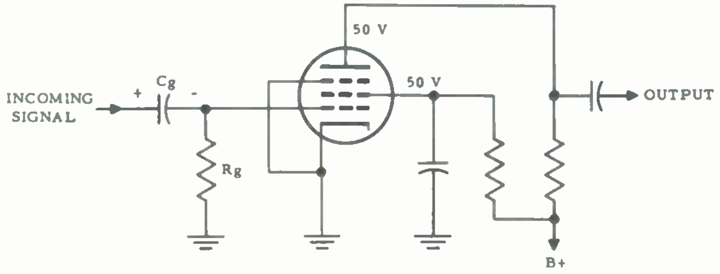

LIMITER CIRCUIT
FIGURE 2

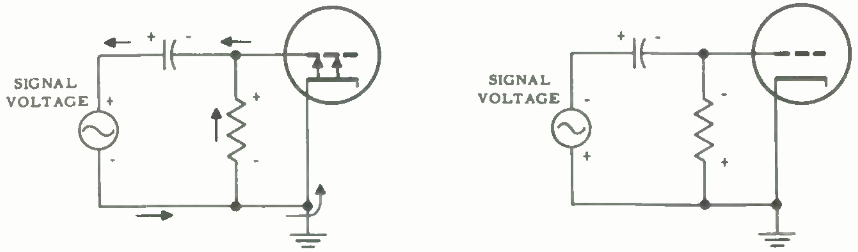

FIGURE 4A

FIGURE 4B

GRID LEAK BIAS

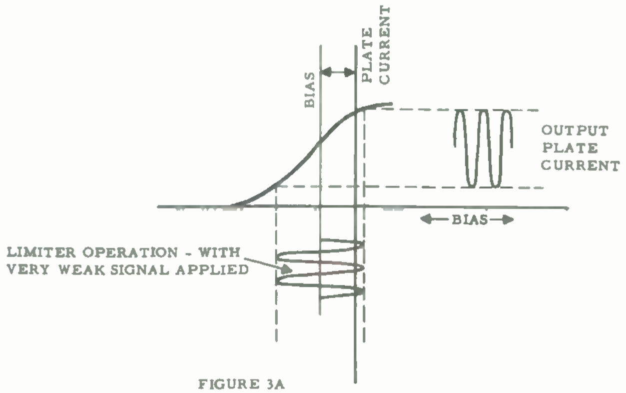

FIGURE 3A

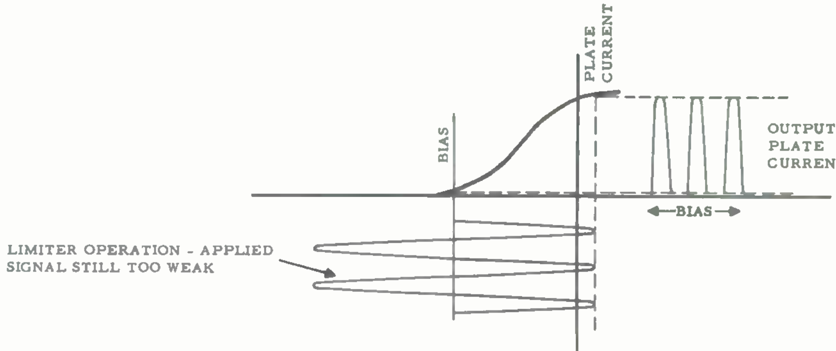

FIGURE 3B

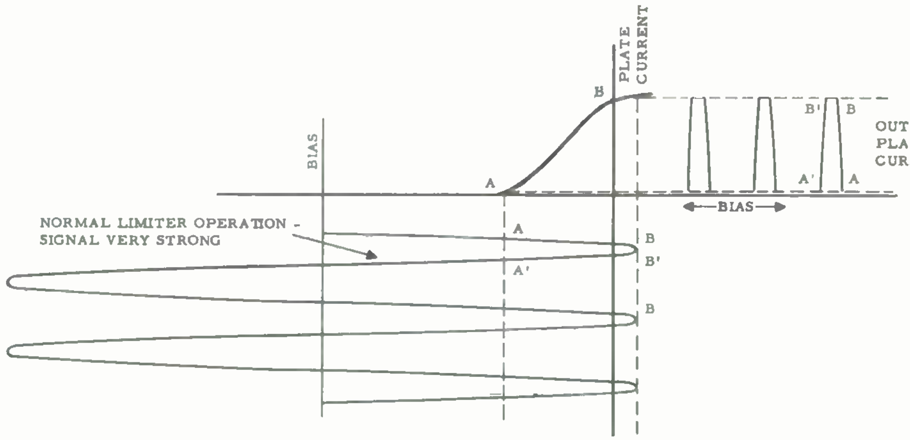

FIGURE 3C

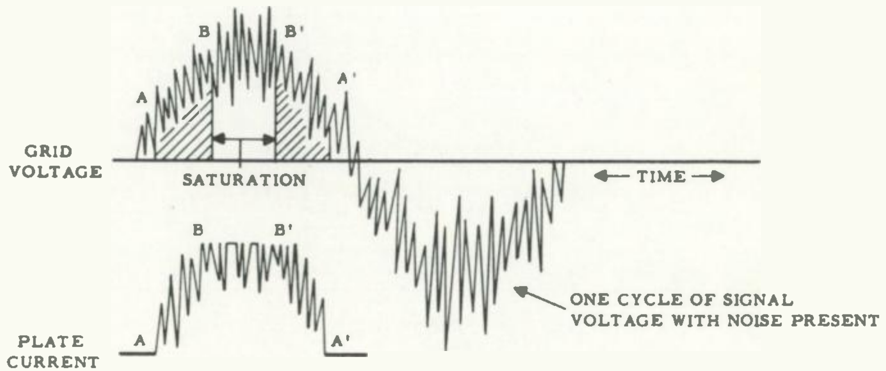

FIGURE 5B FIGURE 5A

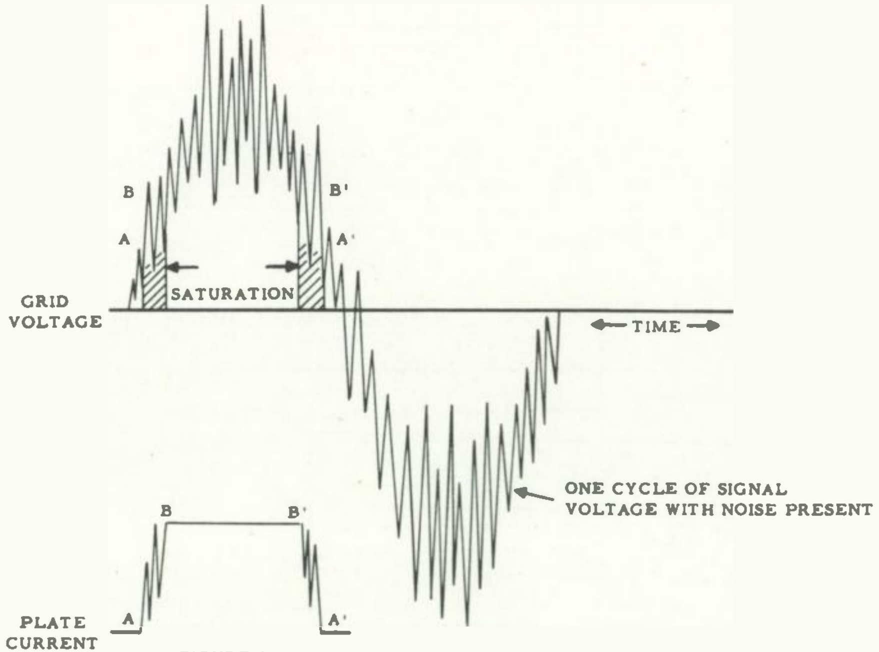

FIGURE 6B FIGURE 6A

national
MOTOROLA
RADIO COMMUNICATIONS
service

A TWO-WAY RADIO COMMUNICATIONS TRAINING PROGRAM

LESSON RA-7
FM RECEIVERS

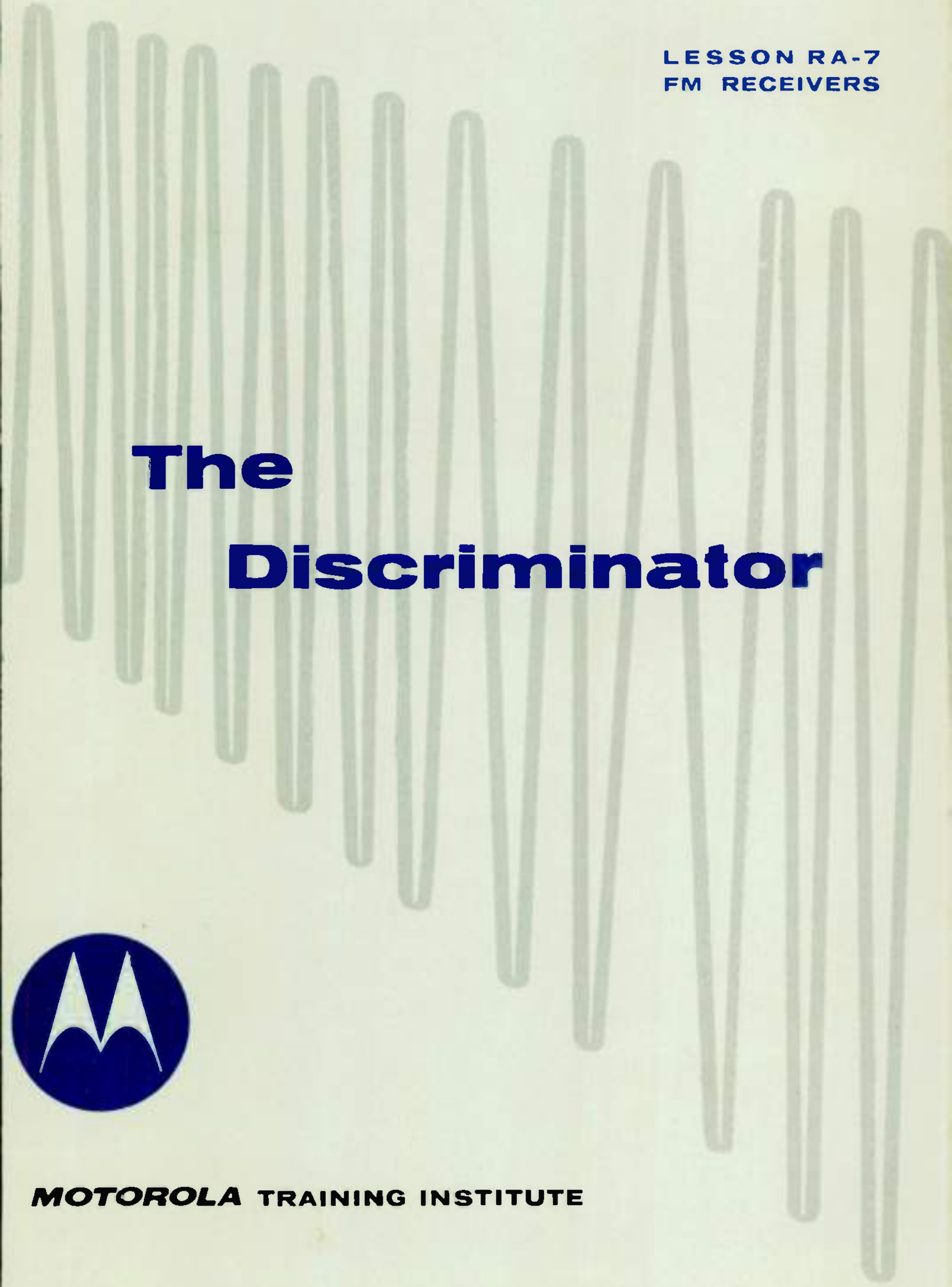

The
Discriminator

MOTOROLA TRAINING INSTITUTE

A TWO-WAY RADIO COMMUNICATIONS TRAINING PROGRAM

LESSON RA-7
FM RECEIVERS

The Discriminator

—one of a series of lessons on two-way FM communications—

MOTOROLA TRAINING INSTITUTE
4501 W. AUGUSTA BLVD., CHICAGO 51, ILLINOIS
APPROVED BY THE STATE OF ILLINOIS
DEPT. OF REGISTRATION AND EDUCATION

PREFACE

This is one lesson of a complete Motorola Home-Study Course which presents to the Service Technician both the principles of operation and the maintenance of two-way FM radio systems. The program covers mobile, portable and base station equipment, including the latest transistorized units.

THE DISCRIMINATOR

LESSON RA-7

TABLE OF CONTENTS

NOTICE

NOTICE

Diagrams and figures referenced in text are "fold-outs" in back of each lesson, for use while studying. The Examinations are also there.

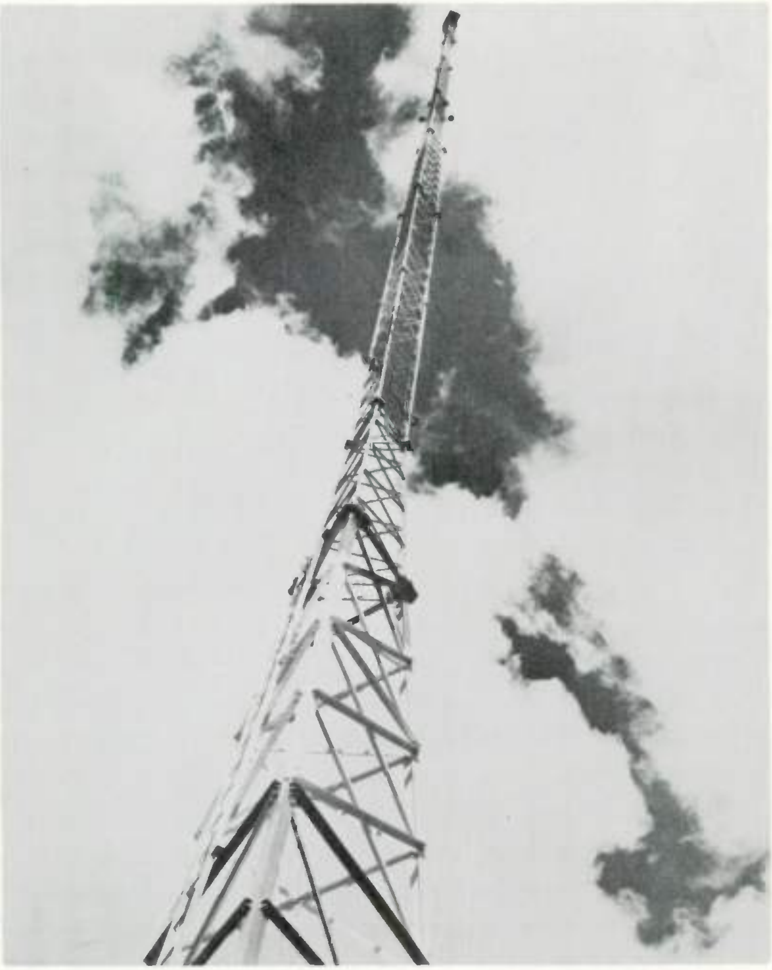

Every day more and more sturdy antenna towers rise into the air, signifying more Two-Way Radio base stations going "on-the-air" for public safety agencies, transportation companies and business and industrial enterprises. Base station antennas for the land-mobile services alone are passing the 100,000 mark.

THE DISCRIMINATOR

Lesson RA-7

Introduction

All FM receivers incorporate some circuit device to convert the incoming deviations of the IF signal (which contain the audio message to be reproduced) into voltage variations. The two most popular of these circuits are the discriminator and the ratio detector. The discriminator--which at the present is best suited for the needs of the communications receiver--is the one described in this lesson.

Because the operation of the discriminator depends upon several phase relationships between existing RF voltages, it is often regarded as somewhat more intricate than other circuits found in FM receivers. For this reason it is probably the least understood. Actually, however, these phase relationships can be easily illustrated by means of vectors.

It is not necessary to have a thorough knowledge of vectors for this purpose--a few basic facts are all that is required. All vector information needed in order to analyze discriminator action will be found in the following section entitled "Plain Vector Talk." If you have not had the opportunity to make use of vectors in the past--or if you feel that you are a little "rusty" on the subject--you will find this section helpful before proceeding with the rest of this lesson.

Plain Vector Talk

Many of the things that we weigh and measure are described in terms of pounds, feet, or perhaps gallons. Because of their nature, we do not require any further data about these things--the information is complete. Other quantities require that their direction be given before we can make useful application of the information. For instance, an airplane pilot must know the direction of a wind in addition to its velocity. In operating his plane the pilot

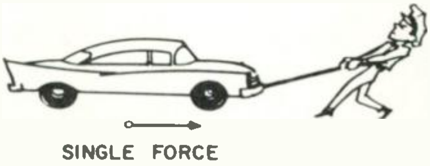

A Vector is an Arrow Pointing in the Direction of some Force. The Length of the Vector Indicates Magnitude.

must take into account the wind direction or he will not fly a straight path to his destination; he may even end up in the wrong place. Or, a person may get in a boat and start rowing to the opposite shore of a river. Unless he takes the river current into account and allows for both its force and its direction, he may find himself downstream from his intended landing spot. Thus, wind and water current must be stated in terms of both magnitude and direction. Many electrical forces, too, must be stated in terms of direction as well as magnitude before we can make intelligent use of them. The vector is a convenient device which can be used to describe both magnitude and direction of forces.

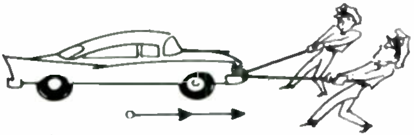

Two Forces Acting in the Same Direction are Shown by "In Phase" Vectors.

A vector is a straight line drawn to a certain length and in a specific direction. In any vector diagram all vectors must have a common starting point, known as the origin. Figure 1A contains two vectors, A and B, drawn from the same origin, "o", but in opposite directions. Furthermore, these vectors have the same length and hence represent forces of equal magnitude. Because they act in opposite directions, these forces oppose each other; because they are equal, they will counteract or cancel each other completely. The resultant of these two forces is zero.

Figure 1B also contains two vectors, A and B, acting in opposite directions. Because the vectors are not the same length they represent unequal forces. The resulting force is determined by the difference in their lengths, and the action will be in the direction of the longer vector, B. If B represents a 300-pound force acting to the right and A is a 100-pound force acting to the left, the net resulting force is 200 pounds to the right.

In figure 1C, the two forces are of unequal magnitude, and they are acting at right angles (90 degrees) to each other. Diagrams like this are commonly used to represent voltages and currents in AC circuits. To analyze the circuit operation it is necessary to determine the combined force which results from these different voltages or currents. This is done as shown in figure 2.

In figure 2A, the two vectors (A and B) are acting at right angles to each other. Their resultant is found by a process known as "completing the parallelogram". From the terminus (end) of vector A, draw a line parallel to vector B. Also draw a line, from the terminus of B, parallel to A. These lines will cross at a point, AB, which is the terminus of a new vector (A & B), drawn from the origin to the point of intersection. Thus, the resultant of vectors A and B has a magnitude and direction which is determined by the new vector, called AB. If A and B are drawn to a specific scale, the same scale can be used to measure AB; in this manner, the exact magnitude of the final force (A + B) can be found.

In figure 2B, vectors A and B are separated by an angle which is greater than 90 degrees but less than 180 degrees. The parallelogram method is again used to determine the resultant--which is shorter than either of the individual vectors. In figure 2C, the vectors lie in nearly the same direction and their resultant is considerable longer than either of the individual vectors. Again the parallelogram method is used to determine the final force, represented by the resultant vector, AB.

In AC practice, we use the word "phase" to describe the relative directions of separate forces. In figures 1A and 1B the forces oppose each other and are said to be 180° "out of phase." In figures 1C and 2A, the forces are at right angles or 90 degrees "out of phase." The vectors in figure 2C are nearly "in phase."

The system shown in figure 3A provides an accurate method which is used to describe the phase of vectors. Two lines are drawn at right angles to each other--the horizontal line is called the X axis and the vertical line is the Y axis. The entire system contains 360 degrees, and since the two axes are at right angles to each other, there will be 90 degrees in each section (quadrant). The quadrants are numbered as shown, and all vectors are considered in relation to the "zero reference," which is that portion of the X axis which lies to the right of Y.

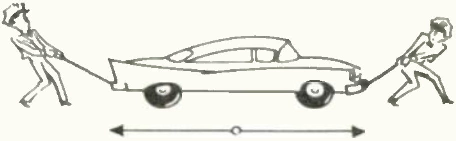

EQUAL FORCES OUT OF PHASE

Vectors of the Same Length and Pointing in Opposite Directions Indicate Two Opposing Forces of Equal Magnitude. The Resultant Force is Zero.

Vectors are thought of as being in constant rotation, moving counterclockwise. It is permissible, however, to "stop" the vectors at any instant to consider their phase angles and analyze what is happening in the circuit. Vectors A and B at figure 3A are in the first quadrant and they are both "leading" the zero reference. A is leading by 20 degrees and B is leading by 60 degrees. With reference to each other, A is lagging B by 40 degrees and B is leading A by 40 degrees. Vector A is said to be at its 20 degree phase; vector B, at its 60 degree phase. Thus, phase refers to the degree of rotation from the reference (zero degrees). The phase difference between A and B is 40 degrees. Sometimes we say that these vectors are "displaced" by 40 degrees.

In figure 3B, vectors A and B are not in the same quadrant, and B is now said to be lagging A by 90 degrees (or leading A by 270 degrees). Also, as vectors represent AC quantities which are not only continually changing in amplitude, but also periodically changing direction, we designate all vectors as being positive whenever they are above the X axis, and negative whenever they are below the X axis. In figure 3B, vector A is positive; vector B is negative.

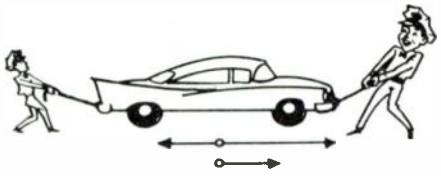

RESULTANT UNEQUAL OUT OF PHASE FORCES

Unequal but "Out of Phase" Forces Result in a Final, Smaller Force.

Vectors can thus be used to represent voltages and currents in an AC circuit. The length of the vector represents the magnitude of the voltage or current, the position of the vector (above or below the X axis) indicates polarity, and the relative directions of the vectors show their phase relationships. When arranged as shown in figure 3, the vectors indicate which voltage or current is leading and which is lagging, and the parallelogram method can be used to determine the resulting value at any instant.

This brief discussion of vectors has been necessarily confined to elementary principles.[1] A knowledge of these principles, however, will make it easier to understand the various phase relationships between voltages which are present in the discriminator circuit. The basic action of this circuit will now be discussed.

Basic Discriminator Action

Before we attempt to analyze the phase relationships between voltages in the discriminator, we should know what happens when certain relationships occur. Let us start, then, by assuming that certain phase relationships take place, and see how the discriminator circuit functions with these assumed voltages.

The simplified discriminator circuit of figure 4 is similar in operation to the FM detector described in lesson 1. The two coil sections, L_1 and L_2, together constitute the secondary of a discriminator transformer tuned to the center frequency of the incoming signal. Coil L_3 is common to both diode circuits. The upper diode, D_1, rectifies the RF voltage applied to or developed across coils L_1 and L_3. The lower diode, D_2, rectifies the RF voltages developed across L_2 and L_3. The

---

[1] See TM 11-681 Electrical Fundamentals, pages 185-189; also FM Transmission and Reception, by Rider and Uslan, pages 407-411.

voltages across R_1 and R_2, resulting from the rectified diode currents, will then be determined by the total or effective voltage applied to each diode, respectively. A steady DC voltage is maintained across each resistor by means of two capacitors (not shown in the diagram), which are connected across the two resistors.

The arrows in figure 4 indicate the direction of the diode currents. The resulting voltages across the resistors will have polarities as shown. The value of the voltage across each resistor depends upon the current, which, in turn, is determined by the applied signal. The total voltage at each diode, however, is not just the arithmetical sum of the voltages across the separate coils; there is a phase difference between these coil voltages. The effective voltage thus depends not only upon the magnitude of the separate voltages, but also upon their phase relationship.

Figure 5A shows the phase relationship of the voltages appearing across the three coils when the incoming signal is at its center frequency. The voltages across L_1 and L_2 are equal in magnitude, for they are developed across the two halves of a transformer winding tapped at its electrical center. The voltage across L_1 is leading the voltage across L_3 by 90 degrees, and the voltage across L_2 is lagging the voltage across L_3, also by 90 degrees. With these phase relationships existing between the voltages, and with the voltage across L_1 equal to that across L_2, the resulting vectors for the voltages of D_1 and D_2 will also be equal in length, as shown in figure 5A.

The discriminator output is a combination of the voltages appearing across resistors R1 and R2, which are connected in series with each other, insofar as the output voltage is concerned. With equal voltages applied to the two diodes and with equal values of resistance for R1 and R2, the resulting voltages across these resistors must also be equal. As far as the output terminals are concerned, however, the voltages across the resistors have opposing polarities and the net voltage is zero.

This condition is illustrated in figure 6A, where the two resistors of figure 4 have been redrawn to show the output when the signal is at its center frequency (no deviation). A voltmeter would read 5 volts when connected across either resistor, but if the meter were connected across the output terminals it would read zero. (Each test lead of the meter would be at the same potential, and voltage is the difference of potential.) This condition exists because of the 90-degree phase relationship between the voltage of coil L3 and the voltages of L1 and L2. Thus, when the incoming signal is at the center frequency (no deviation), the effective voltages operative in each section of the discriminator are equal and the output is zero.

Figure 5B shows the phase relationship when the deviation of the incoming signal is above center frequency (positive deviation). The voltage E_{L3} is again the reference voltage, for it is common to both circuits. The voltage of E_{L1} is now less than 90 degrees out of phase with E_{L3}, and the voltage E_{L2} is more than 90 degrees out of phase with E_{L3}. Because the voltage vectors E_{L1} and E_{L3} are more "in phase," their resultant voltage increases even though the individual voltages of E_{L1} and E_{L3} remain the same. Thus, the applied voltage to diode D1 increases and we may expect a higher current (and voltage) for R1. The voltage resulting for E_{L2} and E_{L3} decreases at the same time, for these voltages are now more "out of phase." The applied voltage to diode D2 decreases, and the voltage for R2 must also decrease. In figure 6B, it is assumed that the voltage of R1 has increases to 6 volts while that of R2 has decreases to 4 volts. The difference between these two voltages is now 2 volts, and the upper output terminal is positive. Thus, whenever the incoming signal deviates above center frequency the output of the discriminator becomes positive.

Figure 5C shows the phase relationship when the deviation of the incoming RF is below center frequency (negative deviation). The phase relation of the circuit voltages changes again, but in this instance the shift is in the opposite direction. The voltages E_{L2} and E_{L3} are more in phase while those of E_{L1} and E_{L3} are more out of phase. The effective voltage applied to D1 is less, while that applied to D2 increases. The voltage increases across R2, and in figure 6C we have assumed that it is now 6 volts, while the voltage of R1 is 4 volts. The difference is again 2 volts at the output terminals, but the upper terminal is now negative (less positive) with respect to the ground terminal, so the output voltage is negative. From this action we see that an incoming signal below the center frequency produces a negative discriminator output.

Let us summarize at this point. At the center frequency (resonance), the voltages across R1 and R2 are equal, resulting in zero output voltage from the discriminator. Furthermore, in order to have either a positive or negative voltage at the output, the voltages of R1 and R2 must be unbalanced, and this results from an unbalance in the effective RF voltages which are applied to the two diode rectifiers. Four basic ideas are involved: 1. The discriminator converts the incoming frequency variations into voltage changes. 2. The center frequency (no deviation) produces zero output. 3. Frequency deviations above center cause a positive voltage output. 4. Frequency deviations below center cause a negative voltage output.[2]

Deviation and the Discriminator Output

Out next consideration concerns the amplitude and frequency of the

---

[2] See TM 11-668 FM Transmitters and Receivers, pages 158-160; also FM Transmission and Reception, by Rider and Uslan, pages 292-300.

output voltage produced by the discriminator. At the FM transmitter, (1) the audio amplitude controls the amount of deviation, and (2) the audio frequency determines the rate of deviation. For the output voltage from the discriminator to correspond to the audio message we want to hear, the process which is taking place at the transmitter must be reversed. At the receiver, then, the discriminator must operate so that (1) the amount of frequency deviation from center will control the amount of output voltage, and (2) the rate of deviation will determine the frequency.

First, let us see how the amount of frequency deviation from center controls the amount of output voltage. When the incoming signal deviates from the center frequency, the voltages of L1 and L2 shift in phase, producing higher and lower voltages respectively, at the diodes. The greater this phase shift becomes, the more these voltages (E_{L1} and E_{L2}) are in-phase and out-of-phase respectively, with E_{L3}. The phase shift of the secondary voltages, E_{L1} and E_{L2}, is determined by the amount of deviation of the incoming signal from center frequency. Thus, the amount of voltage produced at the output of the discriminator is determined by the amount of deviation of the incoming FM signal.

Now let us see how the rate of deviation determines the frequency of the audio output voltage. Each time the incoming signal deviates above and below center, the output voltage must change polarity. Because each complete deviation of the carrier produces one complete voltage change in the discriminator output, the frequency of the output voltage must correspond to the rate, or number of deviations of the incoming signal.

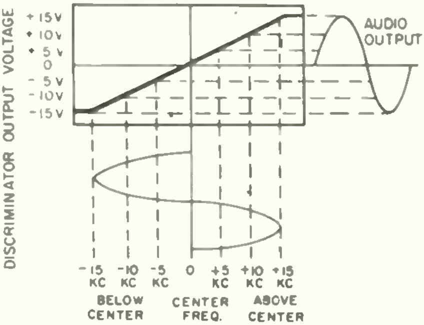

A Typical Wide-Band Discriminator Response Curve. Only a ± 15 KC Deviation Produces Full Output Voltage.

Discriminator Phase Relationships

In the foregoing analysis of discriminator operation we assumed certain phase relationships for the circuit voltages. It remains to be seen how these phase relationships take place.

The circuit of figure 7 is that of a conventional "Foster-Seeley" discriminator. The components of figure 7 correspond to those of figure 4 and the circuit operation will be the same as in figure 4. The plate circuit of the last limiter is tuned to the IF center frequency, and coil L1-L2 is tuned to the same frequency by means of C5. C1 and C2 are RF filter capacitors and maintain the voltages across R1 and R2 at a steady

DC value. The combination of R3, R4, and C3 make up the external load on the diodes, and the rectified current of both diodes passes through R3 and R4, so that these resistors become a common load for both diodes.

In order to illustrate the phase relationships of the RF voltages, the circuit of figure 7 has been simplified to that of figure 8. Because capacitors C1 and C2 act like a short to RF (at the IF frequency), the cathodes of both diodes are at RF ground potential. Also, as far as C4 is concerned, the primary is connected directly to the center-tap of the secondary winding. Thus, for an analysis of the RF portion of the discriminator, we can study figure 8.

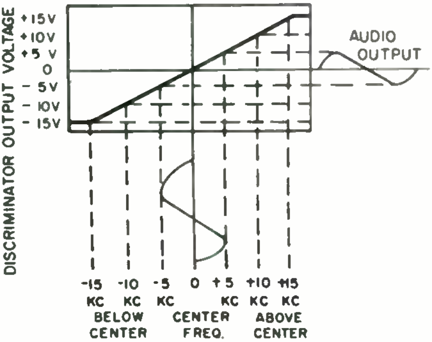

± 5 KC Deviation Produces a Small Output Voltage in a ± 15 KC Deviation System.

To construct the vector diagram of figure 9A, we must first establish a reference voltage. The voltage developed across the plate tank circuit (LP and CP) of the limiter is most convenient for this purpose, and this voltage (Ep) is shown as a vector along the X axis, to the left. All voltages in figure 9 will be considered with respect to this primary voltage, Ep.

The tank circuit in the limiter plate (LP and CP) and the coil (L3) are in series with each other, and connected between B plus and B minus. The voltage across L3 decreases as the voltage across the tank (Lp) increases. These two voltages are therefore 180 degrees out of phase with each other, and the voltage across L3 is shown as a vector(E_{L3}) along the X axis, to the right.

We must also consider the voltage which is induced in the transformer secondary winding (L1, L2) as a result of mutual coupling. This voltage (E_{ind}) is thought of as being "applied" to the secondary tuned circuit. It is always 180 degrees out of phase with the primary voltage (Ep), so it is drawn to the right along the X axis, coinciding in phase with E_{L3}. This induced voltage (E_{ind}) causes a circulating current (Is) in the secondary tank, and, at resonance, this current is in phase with the applied voltage. Since it is in phase with E_{ind} and E_{L3}, this current (Is) is also drawn to the right on the X axis.

The current in the secondary (Is) produces voltages across L1 and L2 which are 180 degrees out of phase with each other and 90 degrees out of phase with the current, Is. In a conventionally-wound discriminator transformer, the voltages thus produced will be as shown in figure 9A, with the voltage of L1 leading the voltage of L3, and the voltage of L2 lagging the voltage of L3, each by 90 degrees.

The voltage applied to diode D1 is the combined voltages across L1 and L3, while the voltage applied to diode D2 is the combined voltages across L2 and L3. The resultant diode voltages will then be as shown by the vectors E_{D1} and E_{D2}. These vectors are the same as those of figure 5A, which were the vectors previously assumed in explaining the operation of the discriminator.

Our discussion of phase relationships up to this point has been concerned with resonant conditions only. When the incoming signal is not at resonance, the phase relationships of the voltages is represented vectorially as shown in figures 9B and 9C. Three of the voltages (Ep, E_{ind}, and E_{L3}) maintain the same phase relationship whether the incoming signal is at resonance or not. Moreover, the vectors E_{L1} and E_{L2} are always drawn at 90 degrees out of phase with the current vector, Is, since these voltages are always 90 degrees out of phase with this current through L1 and L2. With the secondary no longer at resonance, however, the secondary current (Is) is no longer in phase with the applied voltage (E_{ind}). This out-of-phase current in the secondary causes equal out-of-phase voltages across L1 and L2, and when these voltages (E_{L1} and E_{L2}) combine with E_{L3}, they cause unequal diode voltages, E_{D1} and E_{D2}.

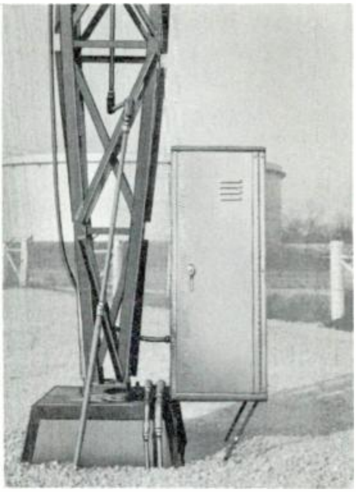

A Typical Outdoor Base Station Installation. This is an All-Weather Type of Cabinet.

Figure 9B (like figure 5B) shows the phase relationship when the incoming RF deviates above resonance. In the secondary tuned-circuit, the inductive reactance exceeds the capacitive reactance, and the circuit becomes inductive. In an inductive tank circuit, the circulating current lags the applied voltage and, in figure 9B, the current vector (Is) must be drawn lagging the voltage (E_{ind}), as shown.

Figure 9C (like figure 5C) shows the phase relationship when the deviation of the incoming RF is below resonance. The capacitive reactance now exceeds the inductive reactance, and the secondary circuit becomes capacitive. In a capacitive tank circuit, the circulating current leads the applied voltage and, in figure 9C, the current vector must be drawn leading the voltage.

It can now be seen how the amount of deviation, by establishing the in-phase and out-of-phase condition of the secondary voltages (E_{L1} and E_{L2}), determines the amount of output. When the incoming signal is far from center frequency, the secondary circuit becomes highly reactive (either inductive or capacitive), and the secondary current, now considerably out of phase with the induced secondary voltage (E_{ind}), sets up equally out-of-phase voltages across L1 and L2. These voltages (E_{L1} and E_{L2}), combining with the voltage across L3, causes unequal voltages to appear at the diodes, resulting in a large positive or negative output.[3]

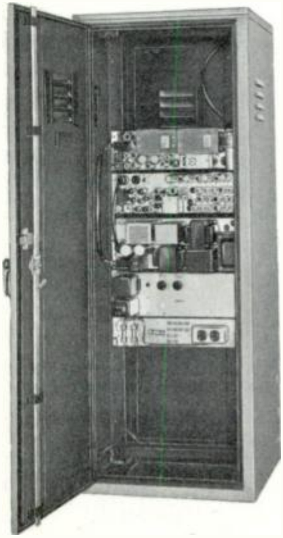

Here We See the Inside of an All-Weather Base Station Cabinet.

Review

At this point in the lesson it might be well to review what we have already learned about the discriminator.

1. The discriminator is a double-diode rectifier arrangement in which the diode output voltages, as produced across the load resistors, are combined to make up the discriminator output.

2. At resonance the discriminator output is zero. Signals above center frequency cause a positive voltage while signals below center cause a negative output.

3. Two separate signal voltages, present in each diode, produce a resultant voltage at each diode. At resonance these diode voltages are equal and the output is zero. Above or below resonance the diode voltages become unbalanced and the output is either positive or negative.

4. The unbalance of the diode voltages is due to changing phase relationships between the RF voltages and this phase shifting is caused by the applied signal being out of resonance with the tuned secondary. The secondary current, no longer in phase with the induced secondary voltage, causes a corresponding phase shift of voltages (E_{L1} and E_{L2}).

---

[3] See TM 11-668 FM Transmitters and Receivers, pages 93-94; also FM Transmission and Reception, by Rider and Uslan, pages 301-308.

5. For proper discriminator action the primary and secondary of the transformer must be tuned to resonance at the center frequency of the applied signal.

Modified Motorola Phase Detector

The Foster-Seeley discriminator circuit which has been described here makes use of the changing phase relationship of the voltages existing in the primary and secondary tuned circuits of a transformer. This description will be of help in analyzing the operation of any discriminator circuit employing these principles. Such circuits are called "phase detectors" and most FM detectors rely upon this principle although in many cases the arrangement may appear to be quite different from that of figure 7.

A Motorola circuit, found in many present-day receivers, is shown in figure 10. The circuitry is that of a modified Foster-Seeley or phase detector. The basic operation is the same as that of figure 7, but there are several distinguishing features which warrant consideration.

We found, in figure 7, that two separate voltages appear in the secondary as a result of voltage developed in the primary. One secondary voltage is produced by the mutual magnetic coupling between the primary and secondary windings of the transformer. The other voltage is due to the direct coupling (C4) from the primary to the secondary. Figure 10 also has two voltages in the secondary. The first voltage is identical to that of figure 7--there is mutual inductive coupling in the transformer. The second voltage is also due to a direct coupling between the circuits, only in figure 10 the connection is not to a center-tap at the secondary coil. Instead, this tap is made at the midpoint of two series capacitors, connected in parallel with the secondary winding. The electrical action is the same; the center of the coil must be at the same potential as the center of the two capacitors. An important advantage of this method of coupling is that it is easier to tap the electrical center of the secondary circuit. This is particularly true when the coil is the tuning element. Tuning is then accomplished by changing the position of an iron core in the coil; this changes the balance of the two halves of the winding in a center-tapped coil. The overall effect of this method of capacitance coupling is that an equal voltage is applied to each diode circuit regardless of the position of the tuning core.

The remainder of the circuit operates in the same manner as the circuit of figure 7. The combination of R3, R4, and C3 make up the external load on the diodes and the current path is completed through R1 (for D1) and R2 (for D2). The rectified current of both diodes passes through the load resistors, R3 and R4, so that these two resistors become a common load for the diodes. The diode currents pass through R3 and R4 in opposite directions, however, so the resulting current and voltage will always be determined by the difference of these current.

When the Secondary of the Discriminator Transformer is Tuned to the Center Frequency of the Incoming Signal, the Discriminator Output Voltage is "Zero."

When tuning the discriminator, two meter positions are used; these are marked 4 and 5, respectively. (The reason for the position numbers will be evident after studying the lesson on metering.) The meter at position 4 is used to measure the output of the discriminator circuit when adjusting the secondary to resonance at the center frequency--at resonance the output reading is zero. With the meter connected at position 5, the primary of the discriminator transformer is adjusted for a maximum reading. The two diodes are now in parallel and the meter indicates the amount of voltage being applied from the primary. In the actual tuning procedure, the secondary coil terminals are shorted so that the reading is due to the primary tuning rather than to the setting of the secondary circuit.

Deemphasis at the Discriminator

Before we can discuss intelligently the "deemphasis" at the discriminator output, we must first know why it is required. At the transmitter, a system called "preemphasis" is used to improve the signal-to-noise ratio of the upper voice frequencies. This is accomplished by making the higher voice frequencies produce a greater amount of deviation than normal.

Because of this preemphasis at the transmitter, the receiver must include a reverse process (called deemphasis) in order that the reproduced message will sound normal. The combination of preemphasis (at the transmitter) and deemphasis (at the receiver) provides a more uniform signal-to-noise ratio for the complete speech range--from 300 to 3000 cps, generally, for two-way mobile applications. The amount of preemphasis introduced at the transmitter is normally 6 db per octave; since 6 db is equivalent to a voltage ratio of 2 to 1, this means that each time the audio frequency is doubled, the voltage ratio (or deviation increase) is also doubled.

The deemphasis circuit in figure 10 is made up of R3 and C3, with the corrected audio voltage appearing across the capacitor. The reactance of a capacitor varies inversely with frequency, so higher frequency audio signals will have a lower voltage at the output than will the lower frequencies. The values are selected so that the amount of deemphasis at the receiver corresponds to the amount of preemphasis introduced at the transmitter, 6 db per octave. Thus, the message sounds natural. The potentiometer in parallel with capacitor C3 becomes the volume control for the receiver, for it provides a means of selecting the desired amount of audio voltage which is applied to the following audio section 4.

Motorola Capacitance Discriminator

Motorola has developed and patented a "Capacitance Discriminator" which is used extensively in two-way and other FM equipment. This discriminator operates as a phase detector, and the principle of operation is very similar to that of the Foster-Seeley circuit.

The capacitance discriminator, shown in figure 11A, derives its name from the manner in which the RF voltage is applied to the secondary tank circuit--this is its distinguishing feature. While the Foster-Seeley uses a conventional double-tuned transformer in which the secondary voltage is due to mutual inductive-coupling between the windings, the Motorola circuit avoids inductive-coupling by enclosing the primary and secondary coils in separate cans or shields. The voltage in the secondary tank circuit is produced by establishing a capacitance bridge which is purposely unbalanced in order to develop the desired amount of RF.

The "bridge" of figure 11A has been redrawn in figure 11B for the purpose of this analysis. Points 1 and 2 of figure 11B correspond to points 1 and 2 of figure 11A, and the secondary coil, L, as well as the two capacitors, C1 and C2, are the same in both figures. The capacitance identified as C6 in figure 11B repre-

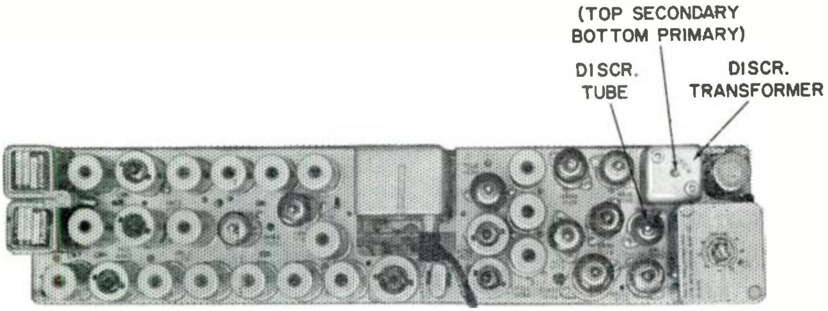

This Photo Shows the Location of the Discriminator Components of a Typical Motorola Receiver.

---

4. See TM 11-668 FM Transmitters and Receivers, pages 27-29; also FM Transmission and Reception, by Rider and Uslan, pages 170-174.

sents the total capacitance between point 2 and ground, which includes the circuit wiring as well as the internal capacitance of the diode, D2, and capacitor C4. The capacitance shown as C7 in figure 11B cannot be identified as a separate component in figure 11A, but this represents the total capacitance of the circuit, between point 1 and ground. The bridge is balanced whenever the ratio of C2 to C1 is the same as the ratio of C6 to C7, or whenever the ratio of C2 to C6 is the same as the ratio of C1 to C7. When the bridge is balanced, there can be no voltage across the coil, L, and with no voltage to initiate a circulating current through the tuned secondary, composed of L, C1 and C2, there will be no discriminator action.

To establish an RF voltage across the secondary coil, L, the bridge must be unbalanced. This can be done by changing the value of any one of the bridge elements--C1, C2, C6, or C7. The values of the bridge are so chosen that there is a definite unbalance of the RF at the opposite ends of the coil. (In figure 10A, this unbalance is realized by the large capacitance of C4.) The resulting voltage applied to the coil sets up a circulating resonant current in the circuit in much the same manner as the voltage induced in the secondary winding of the basic circuit of figure 7. By proper selection of the capacitance of each portion of the bridge, the amount of voltage at the secondary coil may be controlled. The greater the unbalance, the greater the voltage applied to the coil and the greater the secondary current. The RF voltage applied to the secondary largely determines the amount of recovered audio voltage at the discriminator and for this reason it is important that the proper amount of unbalance in the bridge be maintained. (This is particularly important to keep in mind when one of these capacitors is defective and must be replaced. The replacement capacitor must have the same characteristics as the original.)

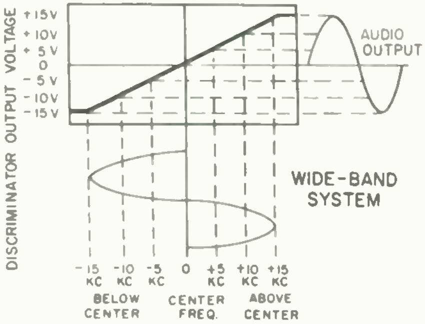

The Wide Band Discriminator Produces About 15 Volts of Audio Output when the Deviation is ± 15 KC.

Two RF voltages are operative in each diode circuit. One voltage is present across D1 and D2 by virtue of the bridge being placed in parallel to the primary, and a portion of this voltage will be applied to the C6 and C7 sections of the bridge. The second voltage is the result of the circulating tank current through the tuned circuit composed of L, C1, and C2. Because of the common ground return of C6 and C7, the center of the coil is effectively at ground potential as far as RF is concerned. One half of the RF voltage developed across the coil is applied to D1 and the other half is applied to D2. These voltages combine to produce the effective RF at each diode, and at center frequency these voltages have the same value, resulting in zero output from the discriminator. When the signal deviates from center frequency the phase change which takes place between the RF voltages is the same as in the basic discriminator.

The output circuit arrangement of the capacitance discriminator is similar to that of figure 10. The load consists of resistors R3 and R4, with C3 and R3 performing the deemphasis operation. The current through diode D1 completes its path through R1 and the load, while the D2 current path is completed through R2 and the load. Both diode currents pass through the load resistors, but in opposite directions, so that the resulting output voltage is determined by the difference of the rectified currents.

The two meter positions, 4 and 5, provide for adjusting the primary and secondary tuned circuits for resonance at the center frequency of the incoming signal. The procedure is the same as in figure 10. Meter position 5 is used in tuning the primary; meter position 4 is used to adjust the secondary.

Discriminator Response Curve

A discriminator response curve shows the amount of output voltage from the discriminator for specified amounts of deviation. The curve also shows how much deviation is accepted without distortion, and how much the discriminator can drift from center frequency before distortion occurs. Figure 12 shows such a curve.

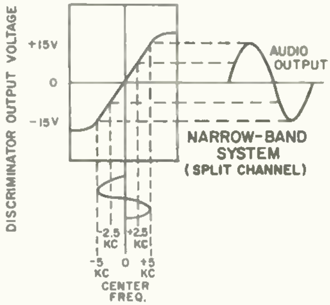

If the Output Voltage of the Narrow-Band Discriminator is to be the Same as that of the Wide-Band Unit, the Response Curve must have a Relatively Steep "Slope."

The amount of deviation above and below center frequency is plotted horizontally and the output voltage is plotted vertically. From the graph, deviations of 10, 20, and 30 kc produce outputs of 10, 20, and 30 volts respectively. This applies to deviations both above and below center--deviations below center cause a negative output voltage, and deviations above center provide a positive output voltage. At the center frequency (no deviation) the output voltage is zero.

The frequency of the incoming signal is not always at the exact center. Moreover, the tuned secondary of the discriminator transformer may change frequency slightly with changes of temperature. This does not mean that the output is distorted, however, for the response curve is linear for a greater deviation than that of the signal. The discriminator response curve of figure 12 is linear over a deviation of plus and minus 30 kc. while the system in which this discriminator is used employs a deviation of plus and minus 15 kc. Thus, if the discriminator secondary is not at exact center frequency, or if the incoming IF signal is not at the exact frequency for which it was designed, the signal will still operate over a linear portion of the curve and the output voltage is not distorted by the discriminator.

The amount of output voltage depends upon the design of the transformer and circuit values. In narrow band-width systems, the discriminator is designed so that the smaller deviations produce comparatively high output voltages. Thus, for a system operating under a plus and minus 5-kc deviation, the discriminator curve should show as much output voltage at ± 5 kc as is produced by a deviation of 15 kc in figure 12.

Summary

Phase discriminators (including the Motorola Capacitance Discriminator explained in this lesson) depend upon the phase relationships of RF voltages applied to two diodes. Incoming frequency deviations cause the RF voltages to change phase and produce a varying voltage output.

The discriminator output is zero when the center frequency is applied, but the output is either positive or negative when the signal swings above or below center.

The phase shift caused by an off-resonant signal produces a stronger signal at one diode than at the other. Under these conditions, the output is no longer balanced and a positive or negative output voltage results. The amount of output voltage depends upon the amount of deviation of the incoming signal from center frequency.

In the basic circuit, the secondary voltage is a result of mutual induction coupling between two transformer windings. The Motorola Capacitance Discriminator, instead of magnetic coupling, makes use of capacitive coupling to the secondary as provided by an unbalanced capacitance-bridge circuit.

FM systems use preemphasis to improve the signal-to-noise ratio of the higher voice frequencies. To restore the discriminator output to normal, a deemphasis network is required. To have proper balance between the audio frequencies, the amount of deemphasis at the receiver must correspond to the preemphasis introduced at the transmitter.

IMPORTANT WORDS USED IN THIS LESSON

DEEMPHASIS: Because of the preemphasis introduced at the transmitter, the FM receiver must include a deemphasis circuit in order to restore its audio output to a normal balance between the high and low frequencies.

DISCRIMINATOR: A type of FM detector which recovers the audio component from the deviations of the applied FM signal. Most communications use some form of the discriminator circuit.

PHASE: As used in AC, phase refers to any instantaneous time within the AC cycle. Because time is usually measured in the degree of angular rotation, phase is designated in degrees, as 45° phase, etc.

PHASE DETECTOR: An FM demodulator or detector, its operating depending upon a changing phase relationship between the operating voltages within the circuit. As the incoming signal deviates from center frequency, these voltages change in phase to accomplish the required detection.

PHASE DIFFERENCE, PHASE ANGLE, or PHASE DISPLACEMENT: A comparison of the instantaneous phases of two AC voltages or currents. If at some specific time, one voltage is at its 90° phase and another is at its 60° phase, the phase difference, phase angle, or phase displacement is then 30°.

PREEMPHASIS: A system of emphasizing the higher modulating frequencies at the FM transmitter, by allowing a higher than normal deviation for those higher frequencies. This results in an improved signal-to-noise ratio for the upper frequencies.

STUDENT NOTES

STUDENT NOTES

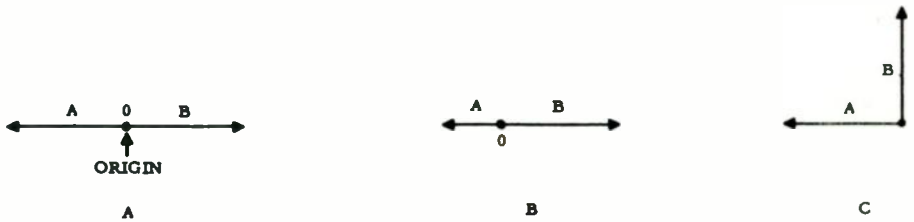

FIGURE 1.

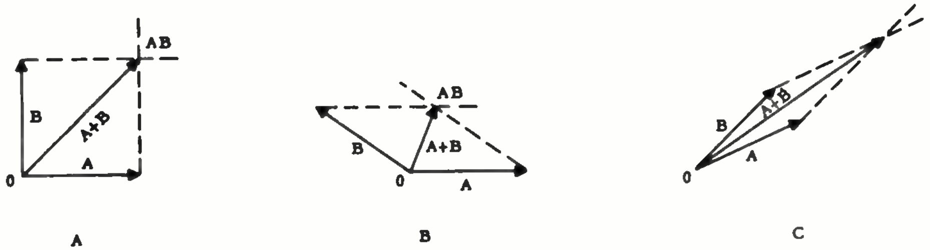

FIGURE 2.

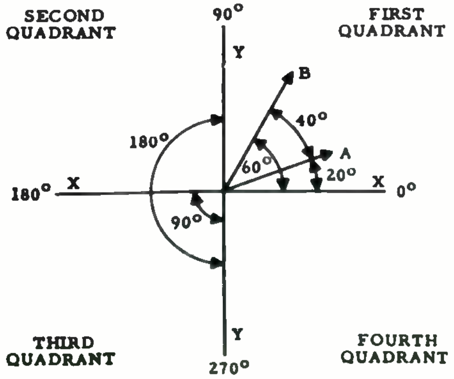

FIGURE 3A

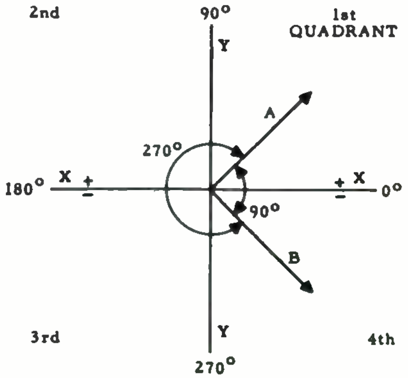

FIGURE 3B

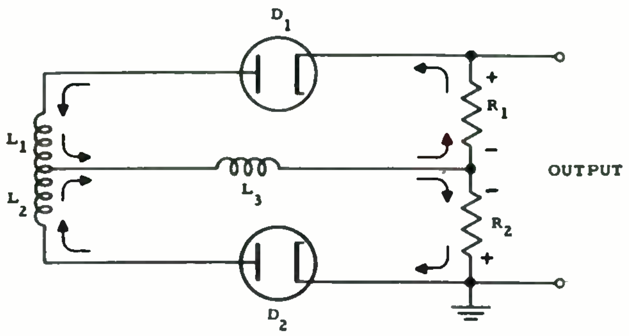

THE DISCRIMINATOR
FIGURE 4

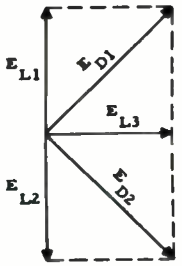

NO DEVIATION
FIGURE 5A

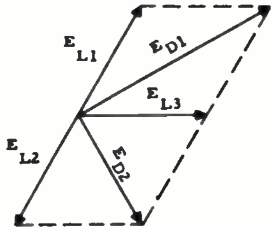

"+" DEVIATION
FIGURE 5B

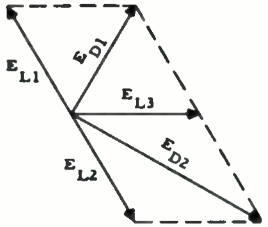

"−" DEVIATION
FIGURE 5C

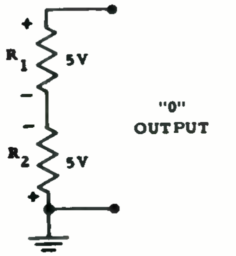

NO DEVIATION
FIGURE 6A

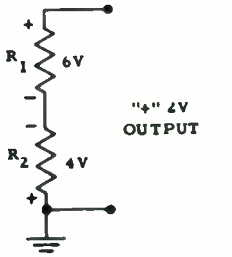

"+" DEVIATION
FIGURE 6B

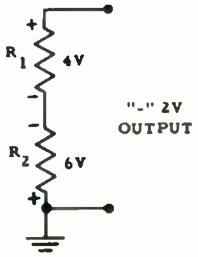

"−" DEVIATION
FIGURE 6C

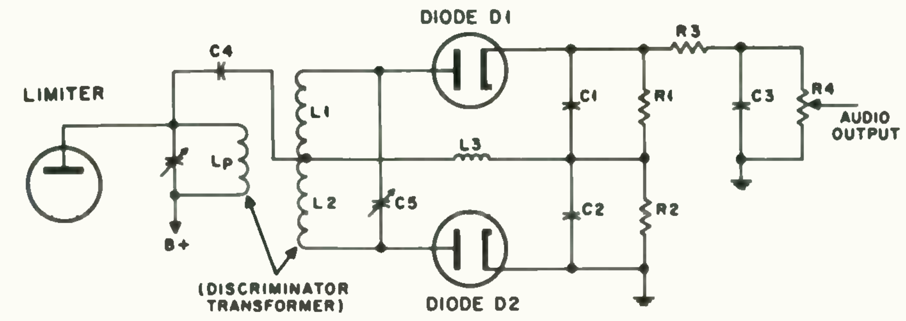

CONVENTIONAL DISCRIMINATOR
FIGURE 7

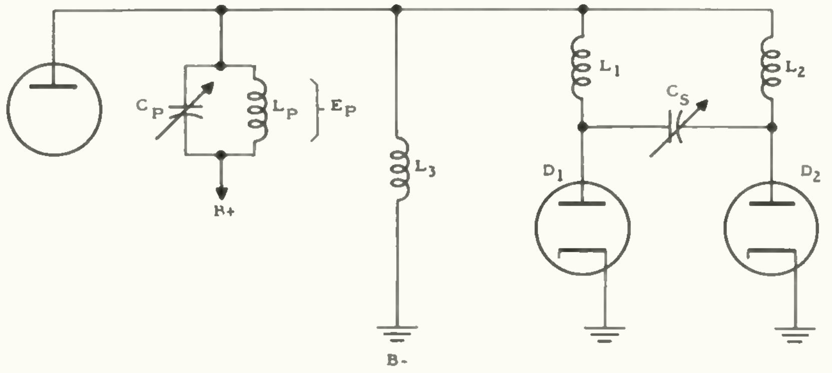

SIMPLIFIED RF CIRCUIT OF FIGURE 7
FIGURE 8

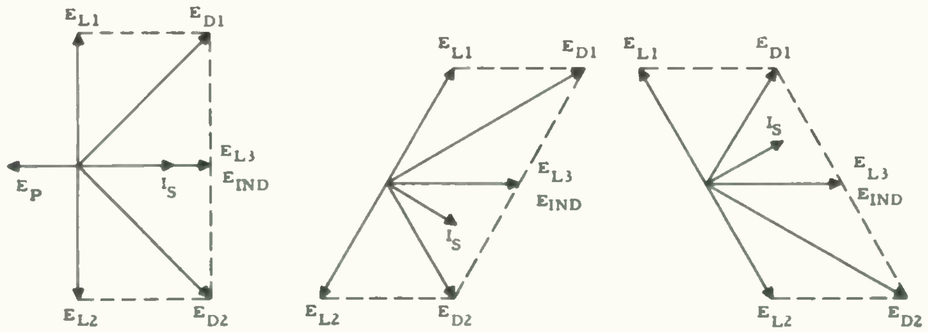

AT RESONANCE
FIGURE 9A

ABOVE RESONANCE
FIGURE 9B

BELOW RESONANCE
FIGURE 9C

PHASE RELATIONSHIPS IN DISCRIMINATOR

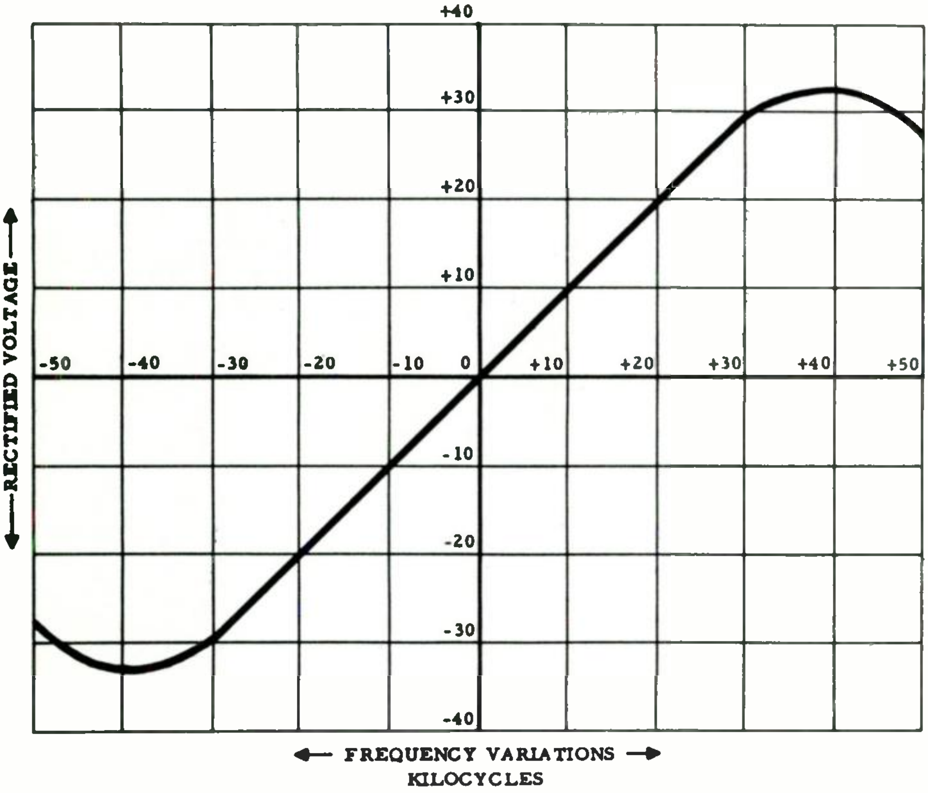

DISCRIMINATOR RESPONSE CURVE
FIGURE 12

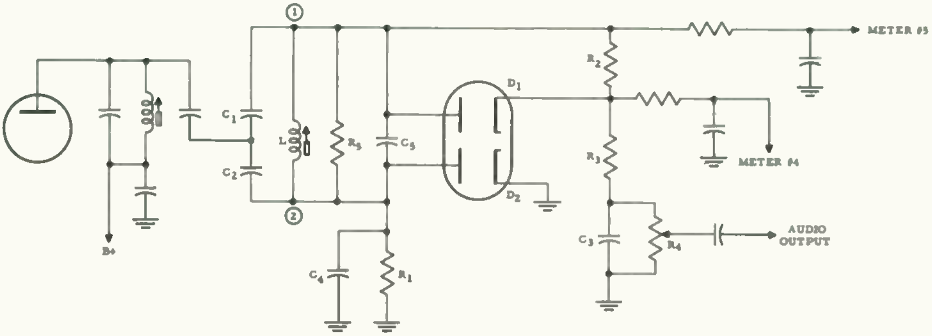

MOTOROLA CAPACITANCE DISCRIMINATOR
FIGURE 11A

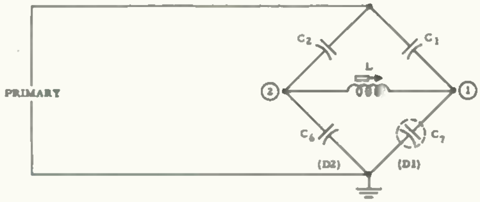

BRIDGE CIRCUIT
FIGURE 11B

STUDENT NOTES

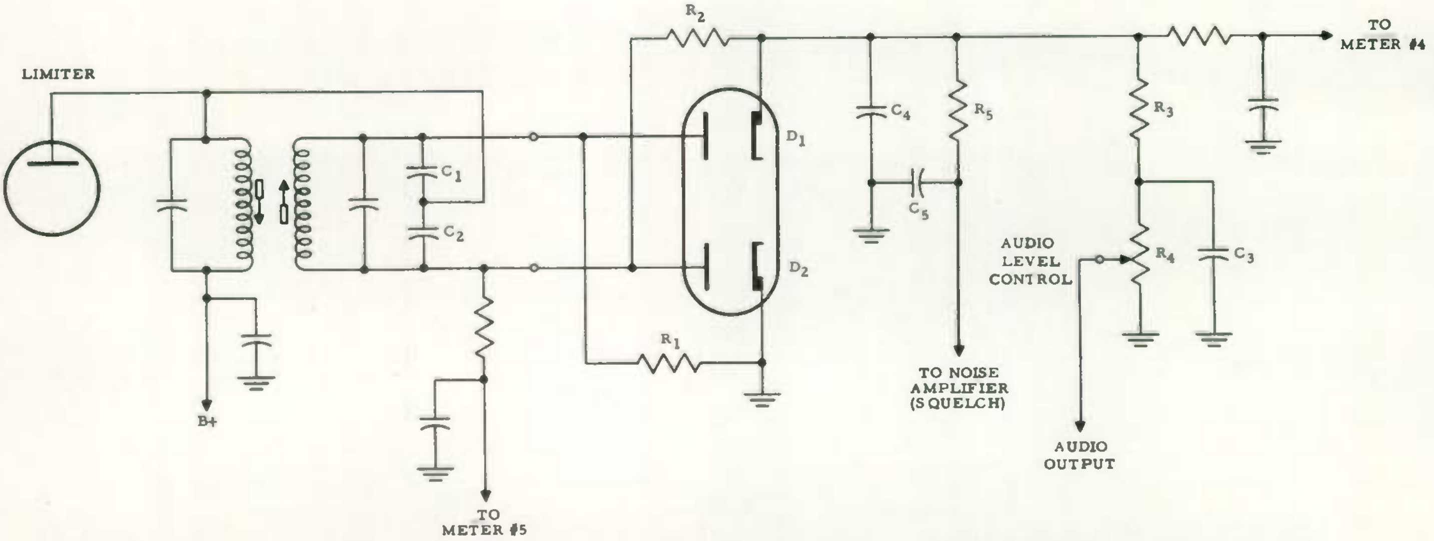

DISCRIMINATOR
FIGURE 10

Motorola Training Institute

4501 West Augusta Blvd., Chicago 51, Ill.

Please PRINT or use STAMP

Name ______________________________ Student No. ______

Street __________________ Zone ____ Date ______

City ______________ State ________ Grade ______

EXAMINATION LESSON RA-7

1. Two vectors have a phase displacement of 90 degrees. Something causes the vectors to become more "in phase". The resultant vector will (increase)(decrease)(remain the same).

2. In normal operation, the discriminator produces changes of voltage at its output from changes of ______________________________ at its input.

3. A discriminator is properly tuned and an unmodulated RF signal producing the center frequency is applied. The discriminator output is now (zero)(positive)(negative)(an audio voltage). When the incoming signal is frequency modulated, the output becomes an (RF)(IF)(audio) voltage, the amplitude depending upon the (rate of deviation)(amount of deviation).

4. For a Motorola discriminator, the primary of the discriminator transformer is tuned by observing meter position ____________________. The secondary is tuned according to the reading of meter position ____________________.

5. In figure 10, the path of the rectified DC current of diode D2 is through these components: ______________________________.

6. A discriminator is properly tuned and the center frequency is being applied. As the signal is increased in amplitude, the reading on meter position 4 will:

   A. Increase ____________________. C. Decrease ____________________.
   B. Remain the same ____________________. D. Change according to the signal strength. __________.

7. The discriminator in figure 10 produces an output of 6 volts when the applied signal has a deviation of 10 kc. When the deviation is increased to 15 kc, we might expect an output voltage of __________ volts.

8. In the circuit of figure 10, capacitor C3 opens. Besides a possible increase in output voltage for all frequencies, it is probable that the higher audio frequencies will: (check all correct answers).

   A. Become louder than the lower frequencies ____________________.
   B. Have a lower amplitude compared to the low audio frequencies ____________________.
   C. Will remain the same compared to the lower audio frequencies ____________________.

9. A discriminator has a response curve which is linear 15 kc above and below the intended center frequency. An incoming signal is 5 kc off channel and the deviation is plus or minus 15 kc. The audio output (will be distorted)(will not be affected).

10. The principal purpose for using emphasis in the receiver is to: (choose only one answer).

    A. Reduce the amplitude of the high audio frequencies. ____________________.
    B. Reduce the high-frequency noise. ____________________.
    C. Restore the audio to its normal balance between the highs and lows. ____________________.
    D. Improve the low frequency response. ____________________.


national
MOTOROLA
RADIO COMMUNICATIONS
service

A TWO-WAY RADIO COMMUNICATIONS TRAINING PROGRAM

LESSON RA-8
FM RECEIVERS

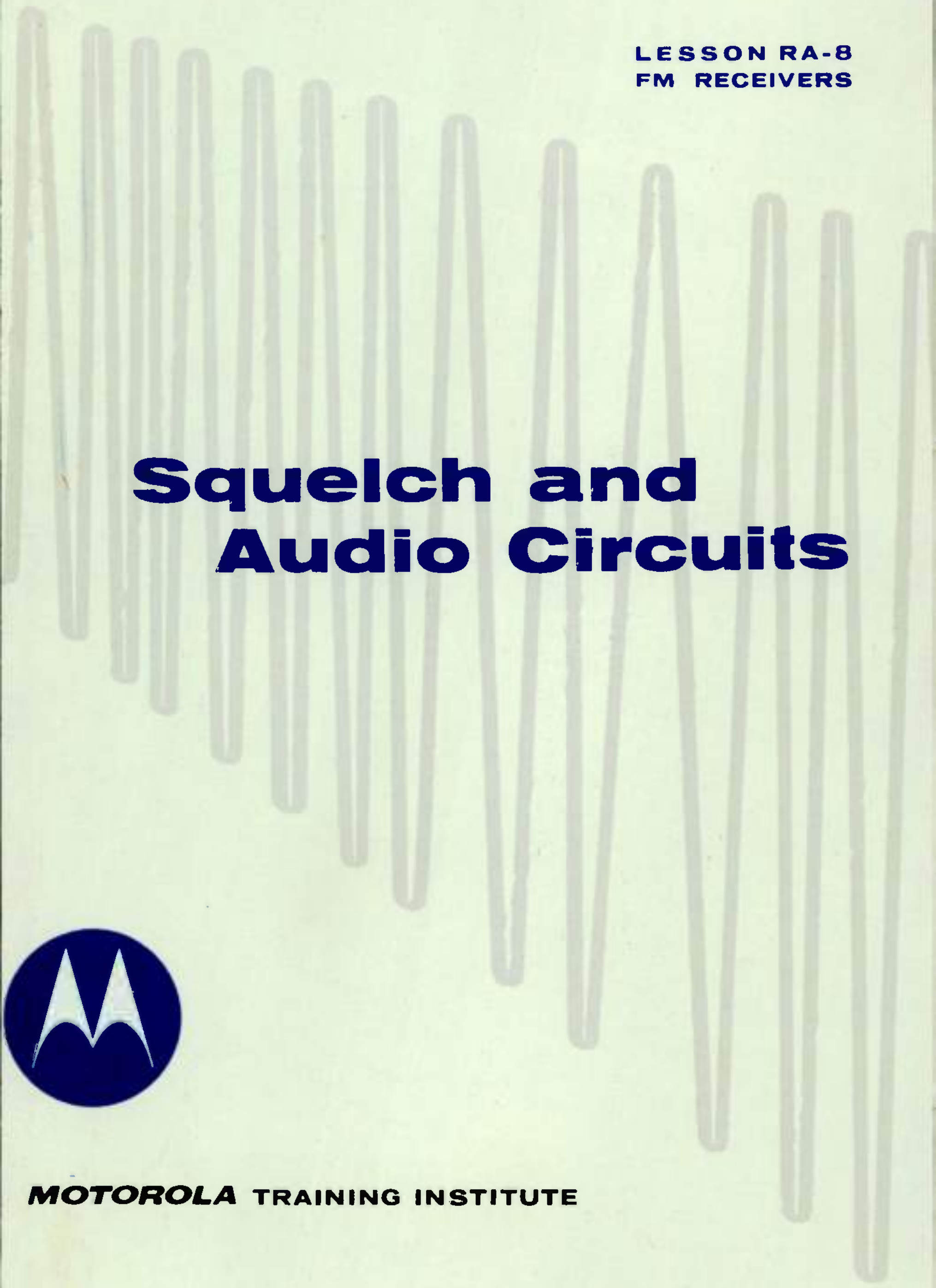

Squelch and Audio Circuits

MOTOROLA TRAINING INSTITUTE

A TWO-WAY RADIO COMMUNICATIONS TRAINING PROGRAM

LESSON RA-8
FM RECEIVERS

Squelch and Audio Circuits

—one of a series of lessons on two-way FM communications—

MOTOROLA TRAINING INSTITUTE
4501 W. AUGUSTA BLVD., CHICAGO 51, ILLINOIS
APPROVED BY THE STATE OF ILLINOIS
DEPT. OF REGISTRATION AND EDUCATION

PREFACE

This is one lesson of a complete Motorola Home-Study Course which presents to the Service Technician both the principles of operation and the maintenance of two-way FM radio systems. The program covers mobile, portable and base station equipment, including the latest transistorized units.

SQUELCH AND AUDIO CIRCUITS

LESSON RA-8

TABLE OF CONTENTS

NOTICE

Diagrams and figures referenced in text are "fold-outs" in back of each lesson, for use while studying. The Examinations are also there.

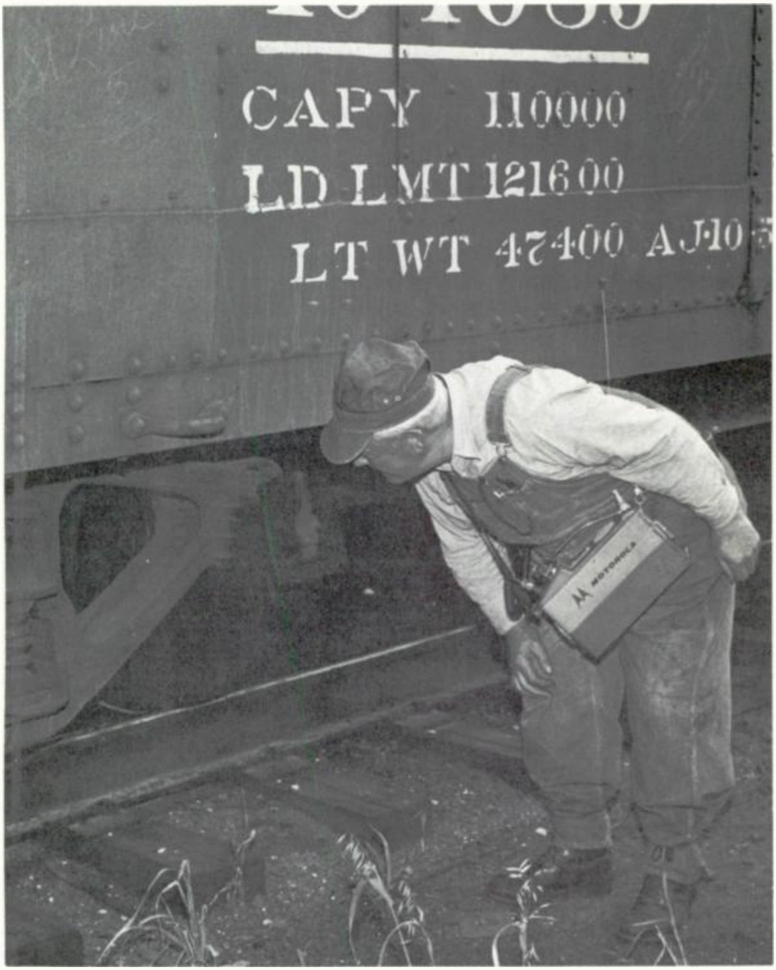

Car checking and inspection – with immediate reports back to the engineer, the conductor or the yardmaster via "Handie-Talkie" two-way radio is one of the many uses of electronics in the railroad industry. Getting trains "on-the-road" faster, more safely boosts customer service and profit.

SQUELCH AND AUDIO CIRCUITS

Lesson RA-8

Introduction

As we listen to the sound portion of a television program or to an FM broadcast receiver, we do not hear any noise or hiss from the speaker when the audio modulation is temporarily removed. The reason for this is that the carrier is still present to keep the receiver quiet even after the audio modulation (representing the transmitted message) is discontinued. When the station finally signs off for the night, however, the carrier is removed. Unless the receiver has a squelch circuit, noise is now heard in the speaker.

This is not the case in two-way communications practice. As soon as the transmission is completed, the carrier (as well as the modulation) is discontinued at the transmitter. Without some means of silencing the receiver during these periods, the constant noise soon becomes bothersome. This receiver silencing is accomplished automatically by means of the squelch circuit, which prevents the noise voltages from reaching the speaker whenever the carrier is removed.

The incoming signal---whether modulated or unmodulated---controls the squelch operation. When the carrier is received the squelch "opens," and the receiver operates normally; in the absence of the carrier the squelch "closes," preventing noise voltages from passing through the audio stages. The squelching (which actually silences the receiver) must not be confused with a similar expression, "receiver quieting", which is the noise reduction at the limiters in the presence of a signal.

Squelch Requirements

Here are the requirements of the squelch circuit:

1. The squelch must quiet the receiver during periods of no signal.

2. The squelch must not interfere with receiver operation for weak signals.

3. The squelch should not operate on strong noise pulses or other interference coming into the receiver.

4. Fading signals must not cause fluttering--opening and closing of the squelch with the changing signal.

5. Squelch action must be independent of supply voltage changes. It should not be necessary to readjust the squelch control for normal changes of supply voltage.

6. The squelch must "open" completely for weak signals coming into the receiver.

The controlling voltage for figure 1--the voltage that initiates the action--is the negative grid bias of the limiter. With no signal present, this bias is low and the limiter plate current is high. With a signal present, however, the grid becomes highly negative (depending upon the strength of the signal) and the average plate current is reduced. It is this action which controls the bias on the audio stage and determines whether the receiver squelch is "open" or "closed."

NO SQUELCH

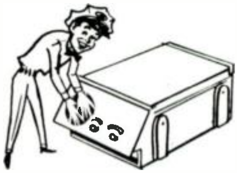

SQUELCH

The Squelch Circuit "Silences" the Noise Present in the Communications Receiver When No Signal is Being Received.

A Simple Squelch Circuit

Although the simple squelch arrangement of figure 1 would hardly be satisfactory in the modern communications receiver, it serves as a convenient starting point for our study. Like most squelch circuits, it renders the first audio amplifier inoperative when there is no signal coming into the receiver.

In the absence of a signal, the audio amplifier is biased beyond plate current cutoff so that noise voltages coming from the discriminator cannot get through to the speaker. When a signal is received, however, the bias on the audio stage is restored to normal, the signal from the discriminator is amplified in the usual manner and the message is reproduced by the speaker.

With no signal being received, the bias voltage at the first audio stage is adjusted until the tube is at plate current cutoff (easily recognized by the reduction of noise in the speaker). To accomplish this, the variable cathode resistor (R4) of the audio amplifier is adjusted so as to increase the positive voltage at the cathode, thus biasing the tube to cutoff. Resistors R4 and R5 constitute a voltage divider between B plus and ground, providing the necessary variation in cathode voltage.

The grid is returned to ground through R3, which is part of another voltage divider (R1, R2 and R3) connected between B plus and ground. The grid is therefore positive with respect to ground, as determined by the voltage across R3. Since both grid and cathode are positive to ground, the effective bias for the tube is the difference between these two positive potentials.

For example, if the grid is 50 volts positive but the cathode is 75 volts positive, the grid will be 25 volts less positive (or 25 volts negative) with respect to the cathode. This comparatively high bias prevents plate current in the audio stage. Any noise voltages applied to the grid cannot get through to the speaker.

The operation of the circuit depends upon a change of voltage taking place across resistor R3 in the grid circuit of the audio amplifier---this voltage must increase when a signal is applied. With a higher voltage across R3, the grid bias is reduced and the audio amplifier tube conducts.

You will recall that R3 is part of a voltage divider (R1, R2 and R3) which is connected between B plus and ground. So long as the supply voltage remains constant, the sum of the three voltages remains unchanged. Thus, if one of these voltages increases the other two must decrease.

Resistor R1 of the voltage divider is also the plate load resistor for the limiter stage and carries the plate current of that stage. Any change of limiter plate current causes a change of voltage across R1. With no signal coming into the limiter, the limiter grid-leak bias is minimum and the plate current maximum. Maximum plate current through R1 produces a relatively high voltage across R1, and the voltages of R2 and R3 are correspondingly low.

When a signal is received, the negative grid bias at the limiter increases and the limiter plate current decreases. With less current through R1, the voltage across R1 must decrease; hence, the voltages of R2 and R3 must increase.

Let's assume that the voltage across R3 increases from 50 to 70 volts. The bias for the audio tube is now but 5 volts and the stage operates in the normal manner. (The cathode voltage remains relatively constant at a positive 75 volts with respect to ground.) The audio coming from the discriminator is now amplified and passes on to the speaker.

As soon as the message is terminated the incoming carrier is removed. The limiter bias is again minimum and the receiver is squelched. We say that the squelch is now "closed." The signal coming into the receiver causes the squelch to "open."

The important factor in the circuit operation is that the squelch control tube (the limiter in figure 1) becomes conductive without a

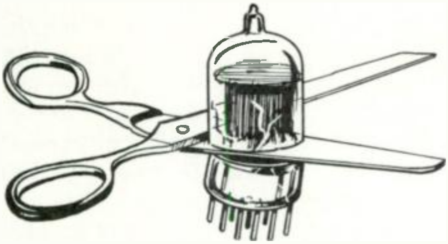

The Squelch Circuit Silences the Receiver Between Signals by "Cutting Off" the First Audio Tube.

signal and biases the audio stage to cut-off.[1]

Limitations of the Basic Circuit

There are certain limitations in the basic squelch circuit just described. For one thing, supply voltage variations cause a change in the fixed bias voltage at the audio cathode, making it necessary to readjust the squelch control setting. If the cathode voltage increases due to the increase of supply voltage, the bias becomes too high and the squelch may not open for weak signals.

When noise pulses of high intensity enter the receiver they produce a negative bias at the limiter and open the squelch. The open squelch allows these sharp noise pulses to be heard in the speaker. If the squelch is set high enough to avoid this "triggering" action, however, the circuit will not respond to weak signals.

The amount of bias change on the audio stage is determined by the change of limiter plate current, and this in turn depends upon the strength of the signal received and the resulting grid-leak bias at the limiter grid. Thus, a weak signal causes only a slight increase in limiter bias and correspondingly little bias-reducing action at the audio grid. The audio stage now operates at the lower portion of its operating curve, which means that the amplification will be very low and the output will be weak. Weak signals picked up by the antenna need all the amplification possible ---the audio stage should provide maximum gain.

Another objectionable feature of the basic squelch circuit of figure 1 concerns fading. Fading signals produce a changing limiter bias and a variable audio bias. This varies the amplification of the audio stage so that the output fluctuates with the signal level.

Besides these limitations, there is another reason why this simple squelch circuit could not be used in the modern communications receiver. The circuit of figure 1 depends for its operation upon the change of limiter grid bias. In the highly sensitive communications receiver the last limiter is always at saturation, whether a signal is being received or not. Because the limiter grid-voltage is essentially constant, there is no changing voltage to operate the squelch. Thus, it is necessary to find another means of controlling squelch operation and this leads us to the Motorola noise-compensated squelch circuit.

---

[1] See TM 11-668 FM Transmitters and Receivers, page 171.

Motorola Noise-Compensated Squelch

The complete squelch circuit as used in the Motorola communications receiver is shown in figures 2 and 3. For convenience of analysis we have divided the circuit into the "control" section (figure 2) and the "noise" section (figure 3).

In figure 2 the DC amplifier becomes the squelch control stage for the first audio amplifier, and performs the same function in controlling the audio bias as the limiter stage of figure 1. This DC amplifier either conducts, biasing the audio amplifier to cutoff, or becomes nonconductive so that the audio can operate normally. Thus squelch operation is realized through the bias of the DC amplifier.

Resistors R1, R2 and R3 in the plate circuit of the DC control tube serve the same purpose as the corresponding resistors in figure 1. The variable squelch bias for the audio amplifier is again the voltage developed across R3. When the DC control tube conducts, the voltage at the audio grid becomes less positive (negative to the cathode) and the audio stage cannot operate.

When the DC control tube stops conducting, the voltage of R3 increases and unbiases the audio grid. The cathode circuit of the audio amplifier is similar to that of figure 1 in that a voltage divider is used to establish a DC voltage at the cathode. This cathode voltage, however, is fixed rather than variable. The "squelch control" adjustment is incorporated in the noise section rather than in the cathode of the audio stage.

In order to control the squelch operation, the bias on the DC control tube must be either highly negative (in order that the tube does not conduct) or it must be near zero, so that the tube conducts and cuts off the audio.

The bias of the DC amplifier depends upon two separate DC voltages: (1) a negative voltage available from the grid of the limiter stage--this voltage is present at all times--and (2) a positive voltage from the noise section of the squelch circuit. This positive voltage is variable.

Without an incoming signal the noise is high and a strong positive voltage (from the noise section) is applied to the grid of the DC amplifier. With a signal, however, the noise input to the noise section is greatly reduced and the positive voltage to the DC amplifier grid is similarly lowered. As we shall soon see, this variable voltage from the noise section determines whether the squelch will be open or closed.

In figure 2 we have used a battery to represent the positive voltage from the noise section; and, to show that this voltage may not always be present, we have included a switch between the battery and the grid of the DC amplifier. We are now ready to analyze the squelch operation, as controlled by the two DC voltages at the control tube grid.

When a signal is received, little or no noise is applied to the "noise" circuit (figure 3) from the discriminator, and the output of the noise section may be considered as zero. This means that the switch in figure 2 is open. The only voltage at the grid is the strong negative voltage from the grid of the limiter. This bias (approximately 20 volts) is sufficient to prevent the DC tube from conducting. As a result, the audio stage is biased normally and the signal reaches the speaker.

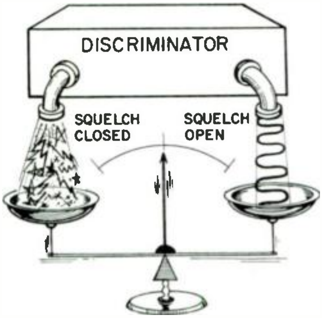

The Discriminator Output May Be Either Noise, Audio, or a Combination of Both, Depending Upon the Strength of the Incoming Signal. Noise Closes the Squelch; a Signal Opens the Squelch.

As long as the carrier is coming into the receiver, the noise applied to the noise section is very low (due to the action of the limiters) and the receiver squelch remains open. As soon as the carrier is removed, however, the squelch closes.

With no carrier to provide noise reduction in the limiters, the discriminator output is essentially a strong noise voltage which, in turn, reaches the noise section of the squelch. As a result, a high positive voltage appears at the output, and this positive voltage is applied to the DC amplifier grid circuit. (This is the same as if someone closed the switch in figure 2.) This positive voltage counter-acts the negative voltage from the limiter grid, with the result that the voltage at the DC amplifier grid is approximately zero. Without bias at the grid, plate current is established in the DC amplifier and the receiver is squelched. Noise coming from the discriminator cannot get through the audio amplifier.

From this discussion we see that the noise section (figure 3) must in some way supply a positive DC voltage to the grid of the control tube when there is no signal. Furthermore, this positive voltage must be removed when a signal comes in. Keeping this in mind, let us now see how the noise section of the squelch circuit operates.

In the combined circuit of figures 2 and 3, the battery voltage of figure 2 represents the DC voltage across capacitor C1. This voltage is present whenever there is no signal coming in, but it is removed whenever a signal is applied.

In figure 3, the discriminator output is applied to the grid of the noise amplifier. With no signal entering the receiver, the discriminator output consists of noise voltage only, having a wide range of frequencies. When a message is received, the discriminator output contains very little noise and consists mainly of voice frequencies in the 300-3000 cps range. The coupling capacitors in the noise amplifier stage are chosen so that the lower (audio) frequencies are attenuated while the higher (noise) frequencies are allowed to pass.

Thus, when noise is present (with no signal applied) the input to the noise rectifier is high and its DC output voltage is also high. With a signal, the noise output of the discriminator decreases, and the noise input to the rectifier drops to a low value. The rectifier output is now approximately zero.

The noise rectifier operates the same as the power-line rectifier in a small table model radio. The rectifier is connected so that the output voltage is positive, and two filter capacitors (C1 and C2) maintain the output voltage at a steady DC level. This DC voltage to the grid of the control tube tends to make the grid positive to ground. Actually, this positive voltage opposes the negative voltage of the limiter grid and the net voltage at the DC amplifier grid is near zero.

The variable resistor in the cathode of the noise amplifier becomes the squelch control. The cathode bias on the noise amplifier determines the gain of the stage and thus regulates the amount of noise voltage applied to the rectifier. In this manner the squelch control determines the amount of rectified DC output voltage applied to the grid of the DC amplifier, and thus controls the bias and conduction of that tube.

The Variable Squelch Control is Usually Located on the Control Head of the Mobile Two-Way Radio.

As soon as a carrier is received, the noise output from the discriminator decreases, due to limiter action, and the input to the noise amplifier consists mainly of voice frequencies. Because of the low-frequency discrimination of the coupling capacitors, the input to the rectifier is small and the positive rectified output voltage decreases. In the absence of any high positive voltage from the noise amplifier, the grid of the control tube becomes very negative and the tube cannot conduct. The squelch is now open. Because of this action at the grid of the control tube, the squelch will open on very weak signals.

The positive opening of the squelch for weak signals is further insured by using a common cathode resistor for the DC control tube and the audio amplifier. When the audio tube conducts, the current through this resistor increases, increasing the bias across the common bias resistor. (The audio stage is so designed that its plate current is considerably greater than that of the DC tube.) With this increased bias voltage applied to the control tube, cutoff is definitely assured.

The Motorola noise-compensated squelch circuit receives its name because of its freedom, both from supply voltage variations and from noise levels coming into the receiver. Let's see how this is accomplished.

Supply voltage changes cause corresponding changes in the gain or amplification of the various stages of the receiver. If the voltage should increase, the noise reaching the limiter stage also increases to produce a greater negative grid voltage. This negative voltage tends to make the grid of the DC control tube more negative. At the same time, however, the noise at the noise amplifier and rectifier also increases and produces a higher positive output from the rectifier.

These two DC voltages, the negative from the limiter and the positive from the noise rectifier, counteract each other and the grid voltage at the DC amplifier remains constant. Thus, the squelch operation is immune to supply voltage variations.

Increases in noise voltages entering the receiver balance out at the DC amplifier grid in much the same manner. The higher noise level at the limiter grid may increase the grid bias, but the DC output from the noise rectifier also increases and the voltage at the DC control tube grid remains constant.[2]

There is an action, however, known as "clamping" that may take place in squelch circuits not specifically designed to avoid this effect. If steps are not taken to counteract clamping, the receiver may not reproduce weak signals.

Clamping

Basically, clamping is a condition whereby the squelch of the receiver opens normally with the application of a carrier, but as soon as the operator at the transmitter talks into the microphone, the squelch circuit in the receiver closes and the message is not heard. The squelch circuit may remain in the clamp condition for as long as the incoming carrier is modulated. Clamping may be the result of any of three different factors taking place within the receiver. We shall discuss each of these conditions separately.

1. An incoming unmodulated carrier may be at the threshold level of the receiver so that the squelch is open, but, due to the limited quieting produced at the limiters, some noise remains. As soon as the carrier is modulated, the carrier level is automatically reduced. (In modulating the transmitter, energy is taken from the carrier and placed in sidebands.)

---

2. See TM 11-668 FM Transmitters and Receivers, pages 172-175; also "Motorola Patented Squelch Circuit", reference R8.

As a result of the lower signal level at the limiters, there is less noise quieting and the noise increases at the noise amplifier and rectifier. The positive output from the noise rectifier increases and the receiver goes into clamp--- the squelch closes. As we shall soon see, Motorola has devised an "anti-clamp" circuit which prevents this condition.

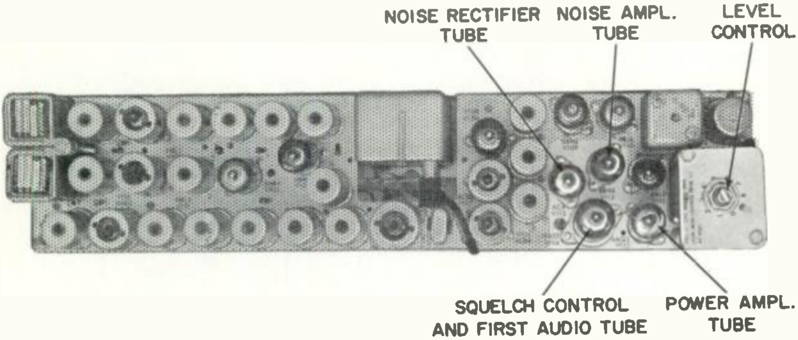

This Photo Shows the Location of the Audio and Squelch Circuit Components.

2. The second possibility of clamping in the receiver results from the modulation of the transmitter by high-frequency voice signals (such as "sss") which have a strong high-frequency component. This looks like noise to the receiver circuits and produces an increased output from the noise rectifier. As a result, the receiver clamps.

The remedy is to control the modulating signal at the transmitter. The Motorola Instantaneous Deviation Control circuit (which we shall study in the transmitter portion of this training) limits the modulation of the transmitter by these undesirable high-frequency components and thereby eliminates this type of clamping at the receiver.

3. The third possibility of clamping comes about when the incoming signal is overdeviated--- again a factor to be controlled at the transmitter. At the receiver, the sideband energy of the overdeviated signal falls outside the acceptance of the Permakay filter and less energy reaches the limiters. With less energy applied, the limiters allow more noise into the noise section of the squelch circuit and the receiver clamps.

Anti-Clamp Circuit

The anti-clamp circuit of figure 3 has been developed, patented and used by Motorola in their communications receivers.

The anti-clamp action can be broken down into three distinct operations: (1) voice frequencies are introduced into the noise amplifier, (2) the noise amplifier operates as a limiter when voice signals are present along with the noise, and(3) only the noise pulses from the amplifier-limiter are allowed to reach the noise rectifier.

The coupling circuit between the discriminator and the noise amplifier allows the upper voice signals (as well as the noise) to reach the grid of the noise amplifier. Only the RF filter and the RC coupling circuit are in this path, and the output voltage of the discriminator is thus applied to the amplifier.

Noise alone, applied from the discriminator to the noise amplifier, provides some clipping of the noise voltage peaks in the plate circuit of the amplifier. This results in near maximum output voltage from the stage into the noise rectifier. When a modulated signal is received, voice signals reaching the amplifier drive the stage into full limiting. As a result, the noise energy in the plate circuit of the amplifier, and thus the total noise applied to the noise rectifier, are lowered.

Two factors are responsible for this limiting action. First, the voice signals have a high amplitude and swing the plate current to saturation and cutoff. That is, on the positive peaks the voice signals drive the stage to saturation, and on the negative peaks the grid is far beyond cutoff. Second, the voice frequencies are lower than those of the noise---one cycle of voice energy lasts longer than one cycle of noise. The amplifier is thus held at cutoff and saturation for a large percentage of the time. The time periods when noise can get through the stage are relatively short.

The operation of the noise-amplifier-limiter stage with voice signals present is the same as that of the limiter stages preceding the discriminator when an IF signal is applied. Just as the IF signal replaces the noise in the limiter output to provide receiver quieting, voice signals entering the noise amplifier stage reduce the amount of noise in the plate circuit. At the limiter section the noise is undesirable, and two limiters are used to reduce the noise to a minimum. In the noise section, our goal is merely to control the amount of noise reaching the rectifier---the amount of noise must not increase during modulation.

Only the noise component remaining in the plate of the limiter-amplifier reaches the rectifier---not the voice signals. This is due to the attenuation of the voice frequencies in the coupling circuit between the noise amplifier and the noise rectifier. With less noise voltage applied to the rectifier, the positive output voltage decreases. Now let's see how this action prevents clamping.

The modulated FM signal, we have said, allows a higher noise level at the discriminator, and, without anti-clamp provisions, this additional noise reaching the noise amplifier and rectifier causes the squelch to close (clamp). A higher noise level reaches the noise amplifier when the carrier is modulated, but in the Motorola circuit of figure 3 there is also a strong audio voice signal that drives the amplifier to full limiting. The noise energy reaching the noise rectifier cannot increase---in fact, it will generally decrease. With the positive voltage from the rectifier remaining constant or decreasing, the squelch circuit does not close ---there is no clamping.

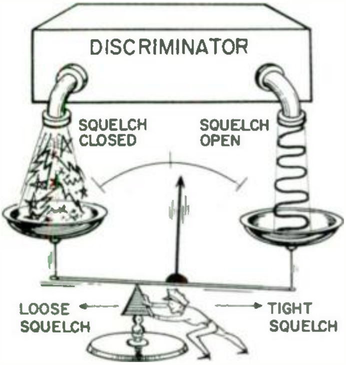

The Setting of the Squelch Control Determines the Relative Ability of the Noise and Signal Coming From The Discriminator to Open and Close the Squelch.

The operation of the anti-clamp circuit depends, then, upon the presence of audio (voice voltages) at the noise amplifier at the time the carrier is modulated. It is this voice signal which limits the noise output from the amplifier to the noise rectifier.[3]

Note that while the coupling capacitors associated with the noise amplifier play an important role in passing certain frequencies, this is accomplished only in conjunction with its associated resistors. This should be kept in mind by the serviceman making any parts substitutions. The values of these resistors (as well as the coupling capacitors) are critical and must not be altered if it becomes necessary to replace them.

Squelch Threshold and Squelch Setting

If the squelch does not open for weak signals the receiver is effectively dead, even though the desired "message" is available at the first audio stage from the discriminator. For example, if the squelch does not open for signals weaker than one microvolt, these weak signals do not get through to the speaker. Thus it can be seen that the opening of the squelch circuit determines to a considerable degree the sensitivity of the receiver.

A well-designed squelch circuit will open for signals below the 20-db quieting sensitivity rating of the signal circuits, and thus the squelch does not interfere with the operation of the receiver. Because the weakest signal producing any degree of intelligence is that which causes about 3 or 4 db of quieting, the squelch must be completely open for this signal level coming into the receiver.

---

[3] See reference R-8.

The opening of the squelch on weak signals is affected by the setting of the squelch control. This control must be adjusted so that, without a signal coming in, the noise is just quieted or squelched. If the control is advanced still further the positive bias at the control tube increases and it takes a stronger signal to open the circuit. This in turn affects the squelch sensitivity and the weak signal may not be heard.

Summary of Squelch Operation

Squelch is realized through the control of the first audio amplifier DC grid bias. With the squelch closed, noise coming into the antenna or generated within the receiver cannot reach the speaker. As soon as a signal comes in, the squelch opens and allows normal reception.

When the control tube is conductive, the audio stage is disabled. In order to open the squelch, the positive voltage due to noise is lowered and only the negative limiter bias voltage is applied to the grid of the control tube. This negative voltage prevents that tube from conducting, which in turn allows the audio tube to operate.

The Motorola noise-compensated squelch offers the advantages of (1) making the circuit immune to noise pulses, (2) making the operation more positive for small input voltages, (3) providing for a quick opening response, and (4) making the squelch circuit independent of supply variations. Also, by applying higher-frequency voice signals from the discriminator to the noise amplifier, the squelch circuit cannot clamp on weak signal inputs.

The Audio Amplifiers

The audio signal reaching the first audio amplifier is usually less than one volt, and an audio section is therefore required in order to operate the speaker.

A typical Motorola circuit is shown in figure 4. Capacitor C1 and resistor R1 form the deemphasis network, and the corrected audio voltage is available across C1. The volume control parallel to C1 determines the amount of audio voltage applied to the grid of the first audio amplifier. The bypass capacitor between the plate load and the decoupling resistor prevents noise on the B supply line from entering the audio system at this point.

The second audio stage---the power amplifier---provides the power needed to properly operate the speaker. The bypass capacitor from plate to ground reduces the amplitude of the higher audio

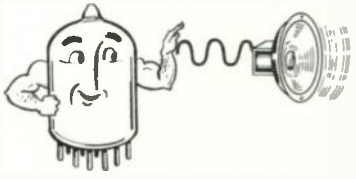

The Audio Output Stage in the Communications Receiver Furnishes the "Power" to Operate the Speaker.

frequencies (above 3000 cps). The circuit is quite straightforward except for its bias arrangement.

A fixed bias for the power amplifier is obtained from the grid circuit of the second limiter. With no signal present, the noise alone provides an appreciable amount of grid-leak bias---little increase is seen in the bias of this stage even when a signal is received. (The plate of the first limiter is already at saturation for the noise present.) Thus the second limiter bias remains relatively constant at all times and provides a convenient source of fixed bias for the audio output stage.

A voltage divider parallel to the grid circuit of the limiter establishes the desired amount of bias for the audio grid. This arrangement permits a higher plate-cathode voltage than would be possible if the more common cathode bias were used, and the tube is thus capable of furnishing more audio power to operate the speaker. Also, by eliminating the higher wattage cathode resistor and high-capacitance bypass capacitor usually associated with cathode bias, the circuit of figure 4 is more economical.

A step-down type of output transformer is used to match the impedance of the plate circuit to the impedance of the speaker voice-coil, usually about 3 or 4 ohms. The speaker is specifically designed to give greatest clarity to the voice signals, thereby improving the "readability" of the message. Output power of this receiver is limited to approximately two watts and, in most applications, is sufficient to reproduce the average message with good volume.[4]

Volume Control Circuits

There are several features of two-way communications equipment which make it inconvenient to use the conventional type of volume control found in tv and other receivers. The major problem concerns the long distance between the operator's control head and the receiver chassis.

Because any noise picked up in this long line will be amplified in the audio stages along with the low-level audio signal, the conventional type of control must have a shielded cable, both from the receiver to the control head and from the control head back to the receiver.

There are two possible solutions to this problem of volume control: (1) the pad type control and (2) the DC control. Each has its advantages and disadvantage. We shall discuss the pad type first.

The pad control (figure 5) makes use of a low-impedance pot and suitable circuit at the control head, connected in the audio supply line to the speaker. Because this audio line is of low impedance and has a high power level, and because there is no further amplification, the shielded cable is not required. Any noise pickup is small (compared to the signal) and will not be heard.

---

4. See TM 11-662 Theory and Applications of Electron Tubes, pages 127-142; also TM 11-668 FM Transmitters and Receivers, page 175; also FM Transmission and Reception, by Rider and Uslan, pages 327-330.

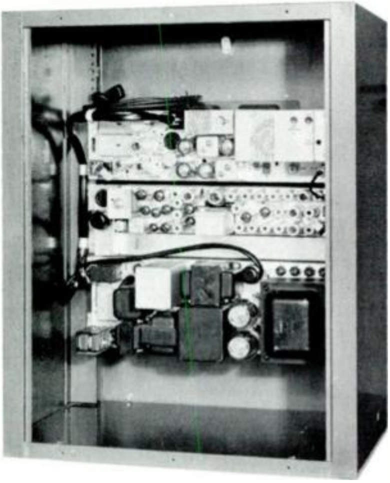

Here We See a Mobile Type Transmitter and Receiver Used as a Base Station and Operated from an AC Power Supply.

The pad control introduces some insertion loss, due to the pot being parallel to the speaker supply line. The attenuation is small, however, and does not appreciably reduce the power to the speaker. There is also a certain amount of mismatch, but again this is relatively small and does not cause noticeable distortion. Thus, the pad type control has the characteristics of nearly full output power with little distortion.

The second type of control--the DC volume control--is shown in figure 6. The DC volume control adjustment affects the voltages of three stages within the receiver. These are (1) the bias of the first audio amplifier, (2) the plate and screen voltages of the second limiter, and (3) the cathode bias of the noise amplifier.

The DC volume control circuit avoids the use of shielded cables by making use of DC voltages to regulate the volume. Two additional advantages are found in this type of circuit. First, because there is not attenuation of the audio signal due to the volume control, maximum audio output is realized. Second, there is a minimum amount of distortion with the control set at an average listening level.

The actual volume control is realized by varying the bias of the first audio amplifier stage. As the volume is reduced to a lower setting, the bias on the stage is increased and the signal operates on a lower portion of the characteristic curve. Since the gain of the stage depends upon its bias, this means less amplification and a lower audio output.

As the DC volume control is adjusted to a low level, the audio stage operates on the lower portion of the characteristic curve and, due to the non-linearity of the curve at the lower portion, strong audio inputs may be distorted. To minimize this distortion, the circuit is arranged so that the limiter output voltage is also reduced when the volume control is adjusted to a lower level.

As shown in figure 5, this is accomplished by lowering the plate and screen voltages. This in turn lowers the plate saturation level and produces a lower limiter output voltage, resulting in a smaller audio voltage from the discriminator. This lower audio signal applied to the audio amplifier does not operate over as wide a portion of the characteristic curve, and the distortion is reduced.

The change of limiter output voltage is usually about a 5-db ratio from maximum to minimum settings of the volume control, which represents a voltage ratio of almost 2 to 1 for the limiter voltage. (6 db is a 2 to 1 voltage ratio.) Thus, the change in limiter operation provides a smaller output voltage which in itself results in a smaller signal to the audio stage; at the same time, the lower audio voltage produces less distortion in the audio stage, by operating over a smaller portion of the characteristic curve.

The third circuit involved in the DC volume control is the noise amplifier stage. The object here is to compensate for the noise level available from the noise amplifier when the receiver is in squelch. When the volume control is set for a low level of audio output, the noise available from the limiter (during times of no signal) is reduced and there is less noise at the rectifier. If this condition went uncorrected, setting the DC volume control would also require resetting the squelch control.

By reducing the bias on the noise amplifier when the volume control is at a low setting, the gain of the noise amplifier stage is increased so that the same amount of noise reaches the noise rectifier regardless of the volume control setting. Also, when receiving very weak signals, some noise reaches the noise section of the squelch. Variation of the noise amplifier bias by means of the volume control maintains a constant noise level (by counteracting the change in noise output from the limiter) so that the squelch sensitivity does not change for the reception of weak signals.

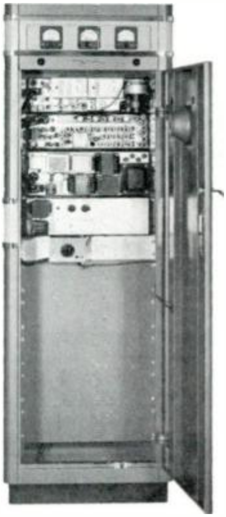

A 450-MC Base Station. The Transmitter is at the Top, Followed by the Receiver, Power Supply and Control Panels.

While the DC volume control has several advantages, the nature of its circuitry does not readily lend itself to certain specialized applications. These involve the use of tone controlling signals to operate the receiver (Quik Call and Private Line receivers).

These receivers require a constant level of the audio controlling tones (which are used to trigger the receiver). If the level of the audio reaching the controlling circuits should change with the setting of the volume control, the sensitivity of the receiver will change correspondingly. Thus, it is necessary to use a volume control circuit which maintains a constant audio level in the audio amplifiers. Since this is achieved by the pad type control, this circuit is used exclusively in such receivers. (It is not our purpose at this time to discuss Quik Call and Private Line receivers. Later lessons will deal exclusively with these circuits.)

In addition to either the DC or the pad control, it is desirable to include a level setting control as shown in figure 4. This is the same as a conventional volume control, but it is not used by the operator to adjust the volume to the desired level. Instead, the adjustment is made by the serviceman. This control is located on the receiver chassis and the unit must be removed from the housing in order to make an adjustment.

The level setting control compensates for variations in the audio gain and, in conjunction with the volume control on the control head, allows for optimum operation. The level control must be adjusted for an adequate output according to the requirement of the particular installation, but it must not be set higher than necessary. To do so will only overdrive the audio amplifiers and produce unnecessary distortion.

In practice, the volume control on the control head is turned to maximum, after which the level setting control on the receiver chassis is advanced to the maximum required output at the speaker. The operator may then select any desired volume ranging from zero (or a very minimum) to the preset maximum.

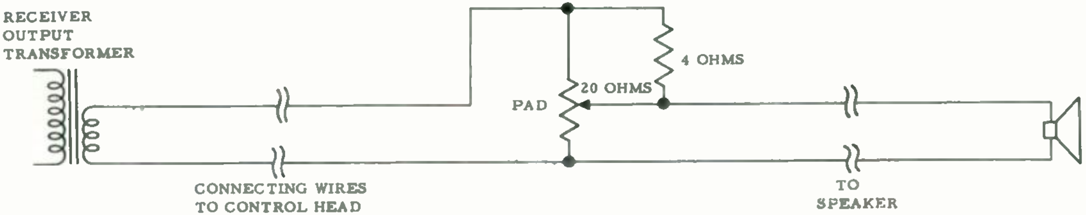

PAD TYPE CONTROL
FIGURE 5

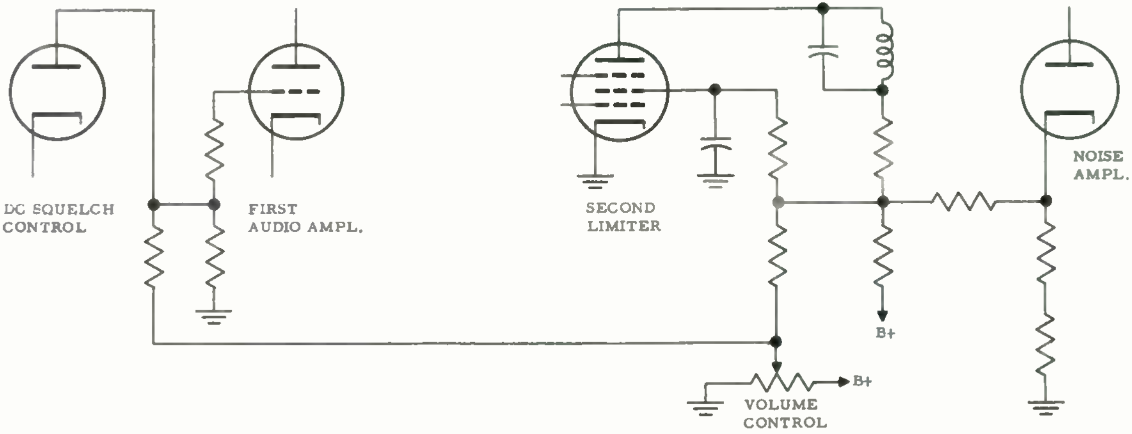

"DC" VOLUME CONTROL CIRCUIT
FIGURE 6

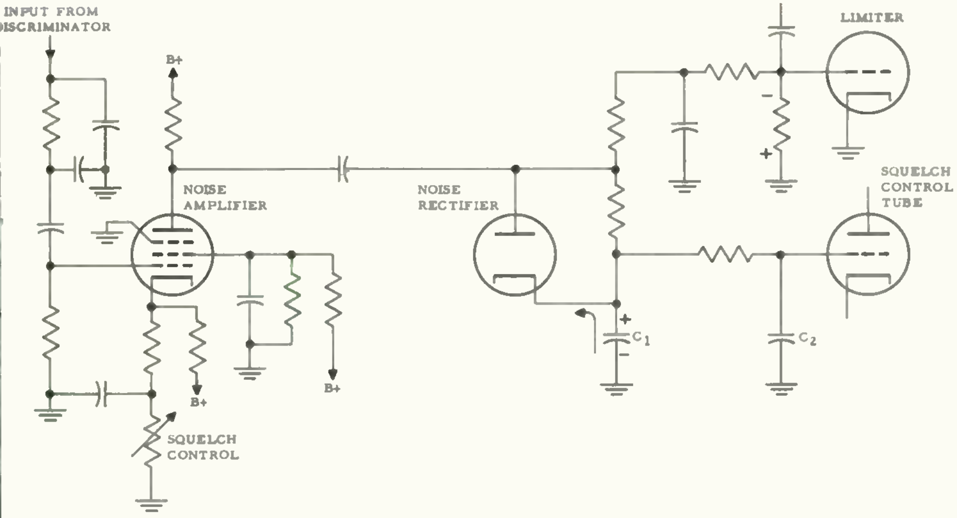

"NOISE" SECTION OF SQUELCH CIRCUIT
FIGURE 3

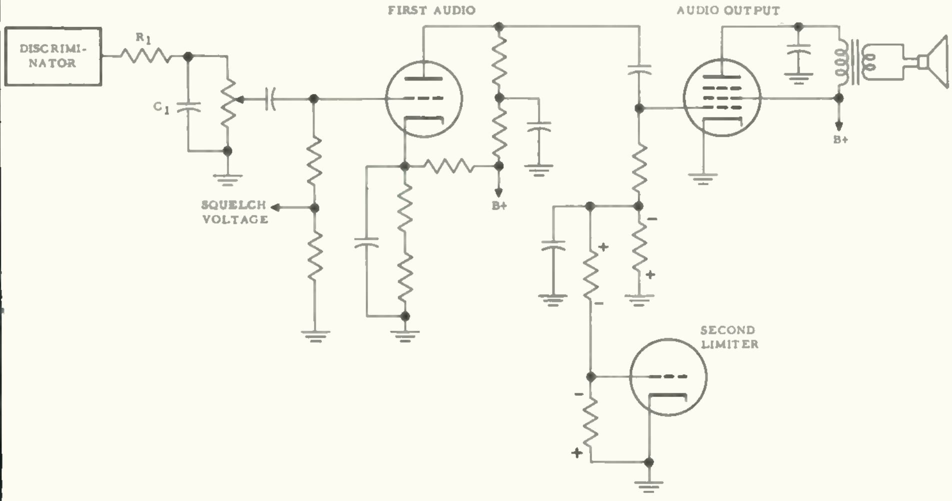

AUDIO AMPLIFIER SECTION
FIGURE 4

IMPORTANT WORDS USED IN THIS LESSON

CLAMPING: A form of undesirable squelch action which prevents the message from reaching the speaker. Although the squelch "opens" for the incoming unmodulated carrier, it "closes" again as soon as the carrier is modulated. This occurs (1) when the unmodulated carrier is weak and barely opens the squelch, or (2) when the transmitter is over-deviated to the extent that much of the sideband energy is beyond the bandpass of the receiver tuned circuits (Permakay filter). In either case, clamping is the result of the reduced signal amplitude reaching the limiters when the carrier is modulated.

CLOSED SQUELCH: The condition in which the squelch has operated to silence the receiver; noise voltages cannot get through to the speaker.

NOISE COMPENSATED SQUELCH: A circuit which utilizes the noise voltages (normally present in the receiver without a signal) to initiate and control the squelch operation.

OPEN SQUELCH: The condition in which the squelch is inoperative, with the result that the receiver may work normally. This condition is evidenced when a carrier is being received.

SQUELCH: A circuit which disables the audio section of the receiver in the absence of a carrier. As a result, the noise which is normally heard without a signal being received cannot reach the speaker.

SQUELCH THRESHOLD: The minimum setting of the squelch control which will permit the squelch to close; a weak signal at the receiver input will open the squelch.

MAXIMUM SQUELCH; FULL-ON SQUELCH: The condition caused by adjusting the squelch control fully clockwise, producing an extremely high bias on the audio stage. A weak signal may not open the squelch---there is a loss in receiver sensitivity.

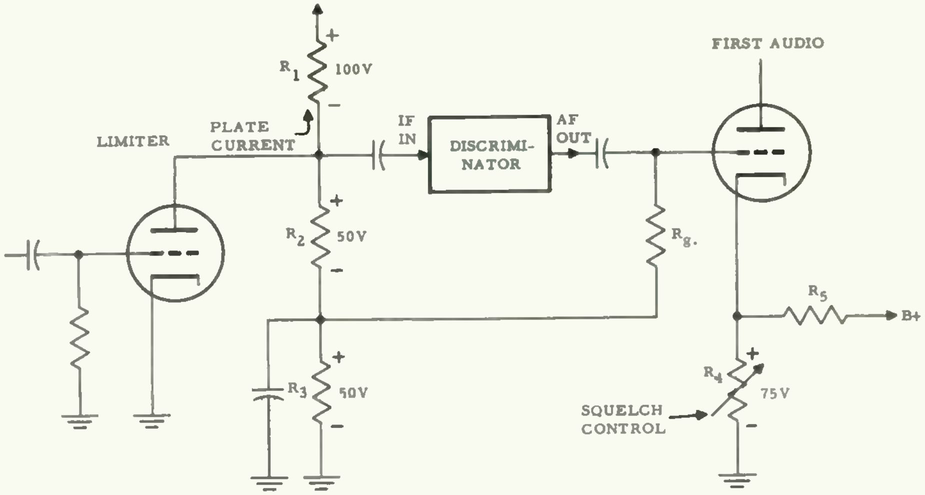

SIMPLE SQUELCH CIRCUIT
FIGURE 1.

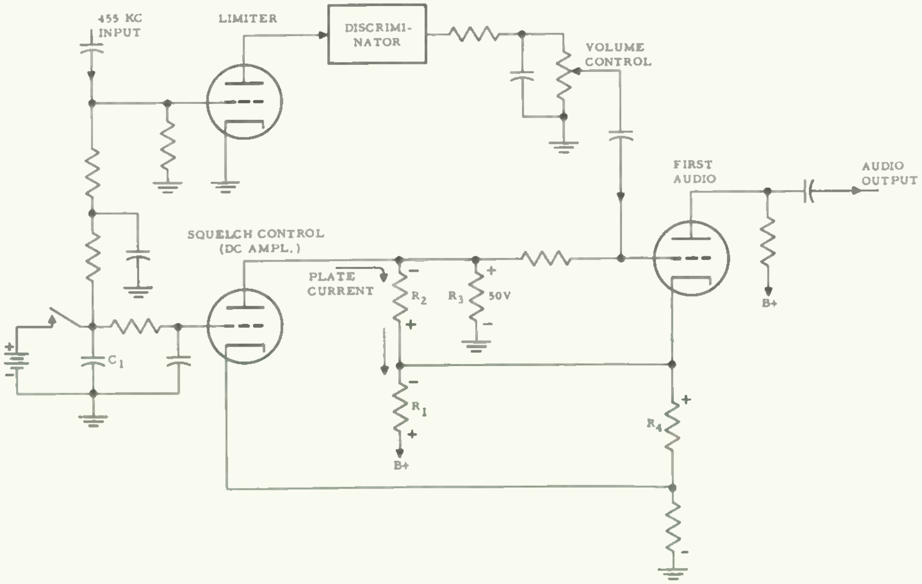

PARTIAL DIAGRAM -- SQUELCH CIRCUIT
FIGURE 2

Motorola Training Institute

4501 West Augusta Blvd., Chicago 51, Ill.

Please PRINT or use STAMP

Name ______________________________ Student No. ______

Street __________________ Zone ____ Date ______

City _______________ State ________ Grade ______

EXAMINATION LESSON RA-8

1. The squelch in the communications receiver serves to: (choose one answer).

   A. Silence the receiver when the incoming carrier is unmodulated. ____________.
   B. Reduce the amount of noise generated by the receiver. ____________.
   C. Biases the last audio stage beyond plate-current cutoff when the noise gets too high. ____________.
   D. Prevent noise voltages from reaching the speaker between messages. ____________.

2. The squelch circuit acts to (reduce)(increase) the negative bias of the first audio stage during periods of no signal.

3. Weak on-channel signals entering the receiver (should)(should not) cause the squelch to open fully.

4. In figure 2 of this lesson, the variable bias which controls the first audio stage is the voltage appearing across:

   A. The limiter grid resistor ____________.
   B. Resistor R3 ____________.
   C. Resistor R4 ____________.

5. In the Motorola noise-compensated squelch, two DC voltages are applied to the grid of the control tube. The negative voltage comes from ____________; the positive voltage comes from ____________ ____________.

6. Adjusting the squelch control of figure 3 of this lesson so that the gain of the noise amplifier is increased will (increase)(decrease) the input to the noise rectifier, which in turn causes a greater (positive)(negative) voltage output. This in turn makes the control tube (conductive)(non-conductive) and (opens)(closes) the squelch.

7. The coupling capacitors to both the noise amplifier and the noise rectifier are replaced with capacitors having much greater capacitance then the original units. The squelch is likely to remain open ____________ closed ____________.

8. In figure 2 of the lesson, resistor R2 increases to a very high resistance value. What will be the probable effect upon the receiver operation? (Choose <u>one</u> answer).

   A. Squelch always open. A. ____________
   B. Distorted audio output; squelch operation normal. B. ____________
   C. Squelch remains closed even when a signal is present. C. ____________

9. The noise amplifier stage in a squelch circuit stops operating due to burned out filament. Will the squelch be always open or always closed? ____________.

10. The audio amplifier section of the communications receiver is designed to pass the (entire)(low)(high) range of audio frequencies. Voice frequencies are usually considered to lie between ____________ and ____________ cycles.


national
MOTOROLA
RADIO COMMUNICATIONS
service

A TWO-WAY RADIO COMMUNICATIONS TRAINING PROGRAM

LESSON RA-9
FM RECEIVERS

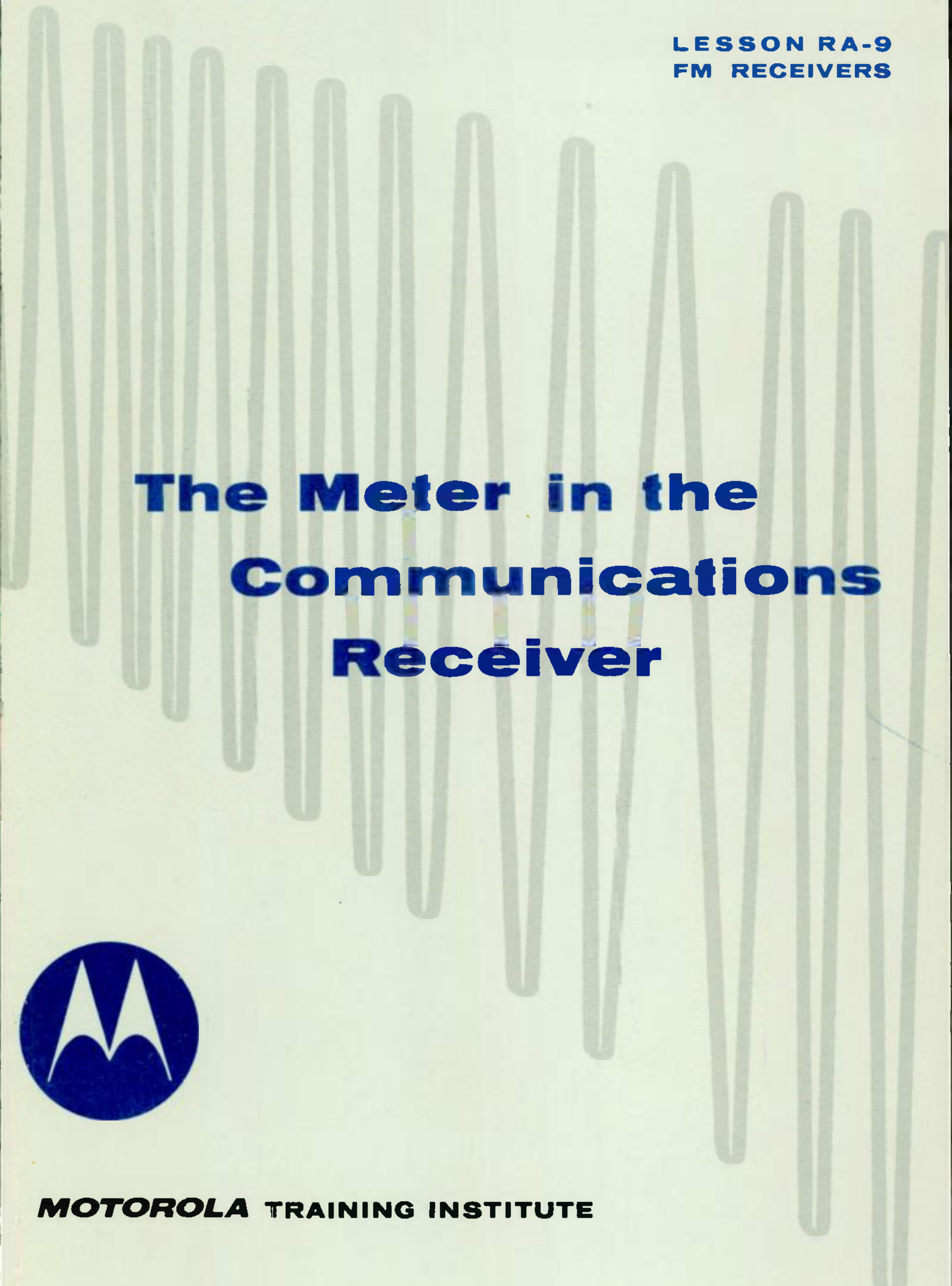

The Meter in the Communications Receiver

MOTOROLA TRAINING INSTITUTE

A TWO-WAY RADIO COMMUNICATIONS TRAINING PROGRAM

LESSON RA-9
FM RECEIVERS

The Meter in the Communications Receiver

—one of a series of lessons on two-way FM communications—

MOTOROLA TRAINING INSTITUTE
4501 W. AUGUSTA BLVD., CHICAGO 51, ILLINOIS
APPROVED BY THE STATE OF ILLINOIS
DEPT. OF REGISTRATION AND EDUCATION

PREFACE

This is one lesson of a complete Motorola Home-Study Course which presents to the Service Technician both the principles of operation and the maintenance of two-way FM radio systems. The program covers mobile, portable and base station equipment, including the latest transistorized units.

THE METER IN THE COMMUNICATIONS RECEIVER

LESSON RA-9

TABLE OF CONTENTS

NOTICE

Diagrams and figures referenced in text are "fold-outs" in back of each lesson, for use while studying. The Examinations are also there.

Two-Way Radio, by replacing hard-to-see hand signals, provides positive voice orders on a construction project – only one of the thousands of uses for "Handie-Talkie" pocket transmitters and receivers in business and industry.

THE METER IN THE COMMUNICATIONS RECEIVER

Lesson RA-9

Introduction

When the family television receiver suddenly stops working and is not repaired for a day or two there may be considerable family dissension, particularly from those younger, avid TV viewers. This is of no major importance, however, compared to the failure of a police or fire department's two-way communications system. Inoperation in such cases may jeopardize public safety.

You, as a service technician, will often be called upon to repair vital equipment, which obviously must be restored to operation immediately. The efficiency with which you go about this task will depend a great deal upon your ability to take and interpret meter readings in the receiver.

All well-designed equipment has some provision for quick monitoring of important receiver circuits by means of a meter, so that almost any trouble can be quickly isolated. Once a fault has been pinpointed to a small section within the receiver, the major part of the job is really finished.

Efficient Service of the Modern Two-Way Radio Requires Quick and Accurate Readings Within the Equipment.

The Important Circuits of the Motorola Two-Way Radio may be Measured by Plugging-In the Motorola Test Set and Turning a Selector Switch.

Consider, for example, the most probable trouble of all--a bad tube. Assuming the filament is not burned out, the offender cannot be located by a visual check. The bad tube might be found by starting at one end of the receiver and changing tubes until the faulty one is found, but such procedure is obviously inefficient and wastes valuable time.

By spending a minute or two in taking meter readings, the trouble may be isolated to a particular section of the receiver; then a few substitute tubes (at most) may be tried and the receiver is back in operation. A tube substitution, it is true, often necessitates a "touch up" of the alignment, but here too the intelligent use of meter readings simplifies what otherwise might be a lengthy or difficult job.

In this lesson we shall study the nature of various readings available in the modern communications receiver. We shall also determine what specific conclusions about the receiver operation can be deduced from these readings.

The Motorola Metering System

Figure 1 is a block diagram of a Motorola communications receiver. It is similar to the one included in lesson 2, but to this diagram we have added (1) the meter positions usually found in this equipment and (2) the location of the particular tuned circuits which must be adjusted to their correct frequencies. These tuned circuits are represented by arrows, each arrow indicating one tuned circuit.

Motorola has devised a rather unique metering system which allows a quick and accurate measurement of vital receiver circuits. (This applies to the transmitter as well as to the receiver). While other meters may be used to secure the same indications, the Motorola test set (an auxiliary piece of equipment) allows almost immediate "viewing" of the circuits.

Each meter position has the necessary resistor and bypass capacitor connected internally in the receiver, and leads are brought out to separate terminals of a multi-terminal plug. The test set is plugged into the receiver; then, by merely turning a switch on the test set, the meter monitors the various circuits.

The meter position remains the same for almost all Motorola receivers. Switch position 4, for example, is always used to balance the discriminator secondary; regardless of the particular model being used, meter switch position 4 records the discriminator output. All meter positions applicable to the receiver of figure 1 are shown in figure 2 and we shall discuss each of these positions as we proceed with this lesson.[1]

Metering The High-Frequency Oscillator

With the test set plugged into the receiver and the switch at position 6, the meter indicates grid current in the high-frequency oscillator (figure 1). In the oscillator section we find three circuits that must be tuned or adjusted: (1) the oscillator grid tank (activity) circuit, which operates at the same frequency as the oscillator, (2) the "multiplier" circuits, which are tuned to some harmonic of the oscillator frequency, and (3) the "warping" adjustment, which controls the operating frequency of the oscillator.

Switch position 6 is used to adjust the oscillator grid tank only. This adjustment affects the amount of RF voltage generated by the oscillator; hence it determines the amount of harmonic output from the stage. At the same time, the activity adjustment does not change the oscillator frequency any appreciable amount. Measuring the amount of grid current at the oscillator and setting the activity adjustment to maximum thus provides optimum operation of the oscillator.

According to figure 2, the reading at position 6 for this particular receiver model may be any value between 12 and 40 on the meter and still be satisfactory and normal. This variation in readings

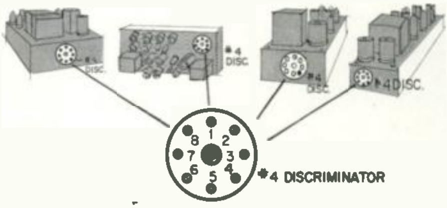

Each Switch Position of the Motorola Test Set has been Standardized. For Example, Switch Position 4 is the Discriminator Balance Test for all Receivers.

---

1. Later Servicing Lessons contain more details about the Motorola Test Sets and their use in service and alignment procedures.

from one receiver to another (which is due to the varying amount of crystal activity) demonstrates the importance of consulting the instruction manual. If he does not know that this particular reading may have a wide variation, the serviceman may conclude that a particular receiver measuring only 15 is not operating normally, because a reading of 35 or 40 was secured on similar model receivers.

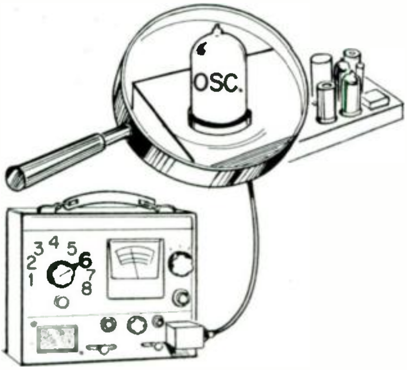

In Switch Position 6 the Motorola Test Set Indicates the Oscillator Activity, by Measuring Grid Current.

The importance of consulting the instruction manual and of following the manufacturer's recommended procedures, is illustrated in making adjustments for oscillator actiity. Certain types of oscillators cannot be adjusted for maximum or peak if they are to provide stable operation. Changes of tube operation or power supply voltages often cause these oscillators to suddenly stop operating, and the receiver is then dead.

For such oscillators, the tuned circuit adjustment must be to the "high" side (frequency-wise) of the maximum reading. Service manuals provide specific instructions regarding this adjustment, so that the final setting will allow continued operation in spite of the circuit variations. These oscillators are usually recognized by a sudden decrease in the current reading on one side of the maximum setting. On the other side the maximum, however, the decrease is gradual.

Where no specific instructions are given, it is always a good practice to set these oscillators slightly (about 95 percent) to the "gradual" side of maximum. It must be kept in mind that the activity circuit is the only adjustment within the oscillator stage that should be made when using meter position 6. Both the frequency and harmonic circuit adjustments are made when observing other meter readings.

The Meter in The Last IF Stage

The serviceman makes use of the grid current reading taken at the grid of the last IF amplifier. In communications receivers it is not uncommon to find the cathodes of the last IF amplifier stages grounded, and the only bias on these stages is that due to grid current. Except for some extremely small "leakage", grid current is evident only when a signal of some sort (noise or otherwise) is applied to the grid. Position 1 on the test set, indicates the amount of signal or noise at the grid of the last IF stage.

By measuring the strength of the signal applied to the grid of the last IF stage, the meter in position 1 serves as an output meter for all the receiver stages between the antenna and the grid of the last IF. Thus, all of the tuned circuits which control the strength of the signal may be tuned to resonance by observing a maximum indication of the meter. The circuits which may be adjusted in this manner are the antenna and RF, the oscillator multiplier, the first IF, and the plate tanks of the first two stages of the last IF section.

Figure 2 suggests a reading between -0.1 and -1.0 volt, and this is the average indication for the noise present without an incoming signal. An incoming signal produces a higher reading, the amount depending upon the signal amplitude. Strong signals may even produce saturation, although this is not the average condition.

Unless the receiver is aligned properly and receives a comparatively strong signal at the channel frequency, the reading of position 1 is very low---perhaps zero. For this reason it is usually necessary to use position 2, the grid of the following stage, for service and alignment procedures.

The reading of position 1, however, is useful where a strong signal is applied to the receiver and the reading of position 2 is in saturation. Because it is now impossible to use the reading of position 2, it is necessary to use position 1.

The Meter in The First Limiter

Figures 1 and 2 show meter position 2 as recording the grid current of the first limiter. The principles and factors discussed for position 1 apply also to position 2. Because of the additional amplification of the last IF amplifier stage, the noise or signal level at the first limiter grid will be higher then that of the preceding stage, and we can expect the readings, too, to be considerably higher. The tabulated range of -18 to -40 volts confirms this. With an average signal input, this reading will readily reach saturation.

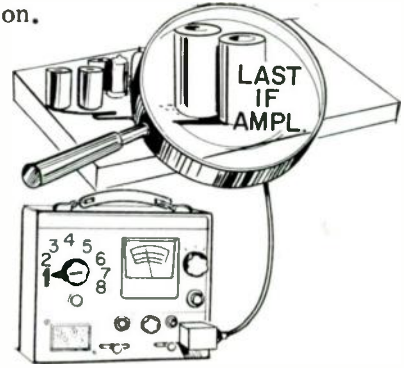

In Switch Position 1 the Motorola Test Set Indicates the Signal (or Noise) Level at the Grid of the Last IF Amplifier.

In servicing receivers with low gain we find that the reading at position 1 is often too low to be of any use, but position 2 may provide a reasonable indication.

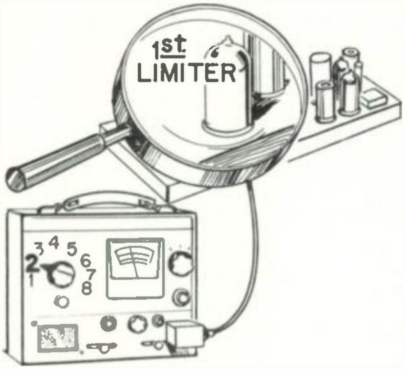

In Switch Position 2 the Motorola Test Set Indicates the Signal (or Noise) Level at the Grid of the First Limiter.

It is possible to use position 2 for adjusting all the tuned circuits listed for position 1 so long as the meter does not indicate saturation. Besides, since the tuned plate circuit of the last IF amplifier follows position 1 (insofar as the signal path through the receiver is concerned) it is necessary anyway to use position 2 in order to adjust that circuit. For the final adjustments of the tuned circuits,readings in position 2 usually show sharper changes and allow settings which are more exact.

Let's see how meter position 2 is used for receiver alignment. Assuming that an RF of the correct channel frequency is applied, and that the local oscillator is operating at its correct frequency, we may adjust the grid and plate of the RF amplifier, the multiplier circuits in the oscillator and the plate circuits of the mixer and 1st IF amplifier for maximum on meter position 2. (We can also adjust the plate circuits of the 2nd IF amplifier stages in the low-frequency IF section, but these circuits are tuned by an alternate method, discussed later in this lesson.)

When using the meter in position 2, the possibility of saturation must always be kept in mind. Once the stage has reached saturation, there will be no changes in the reading for further increases of applied signal. This is particularly important in using the meter for alignment. The signal into the receiver must be kept low so that the meter deflection is near the center of the dial.

The reading of position 2, with noise input only, is often used to determine the general sensitivity of the receiver. The amount of noise, as shown by the meter reading, indicates the amplification and allows a reasonable deduction concerning the receiver sensitivity.

Metering The Discriminator

The meter positions discussed up to this point provide for the adjustment of all circuits except those of the discriminator transformer and the oscillator frequency.

The discriminator transformer has a tuned primary and secondary and both these circuits are tuned to the second or low IF frequency. Because of the importance of having both these tuned circuits resonant at the center frequency, Motorola has provided a separate meter position for each.

Switch position 5 is used to adjust the primary, and position 4 is for the secondary. The intelligibility of the reproduced message depends a great deal upon the proper adjustment of these circuits, for considerable distortion may result if the circuits are not resonant to the center frequency. This applies to both the primary and the secondary.

There is a very good reason for having separate meter positions for tuning the primary and secondary of the transformer. The meter in the discriminator secondary is necessary to properly adjust the secondary for zero output. If we attempt to tune the primary by observing the secondary reading, we run into trouble.

When the secondary is balanced or at zero there is no deflection when we adjust the primary. If the secondary is off resonance, the reading is due to a frequency either above or below center. To tune the primary for maximum will only tune that circuit to the same off-center frequency as the secondary!

To provide for tuning the discriminator primary, Motorola receivers incorporate a meter circuit which reads the amount of rectified current in the discriminator. This meter position is designated #5 in most receivers.

As the primary is tuned to resonance at the center frequency, the voltage applied to the secondary increases and the meter reads maximum. It is essential that a short piece of wire be temporarily connected directly across the secondary winding terminals during this adjustment in order to prevent any interaction between the windings.

Figure 2 suggests a maximum reading of -12 to -16 for this meter position, and, due to the saturation of the last limiters, this reading will be about the same for either noise or regular transmissions.

After the primary has been adjusted to maximum, the wire across the secondary is removed and the meter switch is placed in

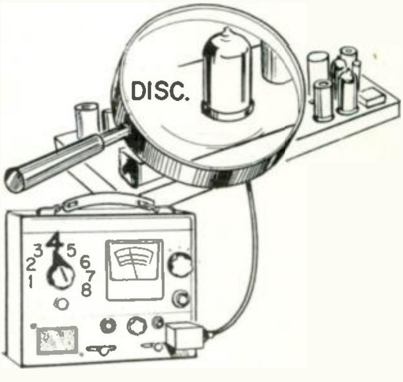

In Switch Position 4 the Motorola Test Set Indicates the Discriminator Output.

position 4. With the center frequency applied, the secondary is tuned for a zero reading.

This zero reading must be a very sharp indication between positive and negative peaks. That is, the meter reading should rise sharply, positive and negative, on either side of zero. If these peak indications are not present the tuning is not correct or there is something wrong in the receiver circuits.

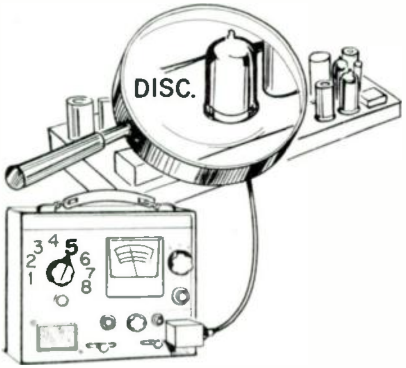

In Switch Position 5 the Motorola Test Set Indicates the Input to the Discriminator.

Oscillator Frequency Adjustment

The adjustment of the high-frequency oscillator to its correct frequency requires a source of RF signal at the exact channel frequency. Unless the RF frequency is correct, the oscillator frequency adjustment can result only in off-channel operation.

Thus, before making such frequency adjustments at the receiver it is well to first determine that the RF source is at the channel frequency. This done, the next step is to check the discriminator secondary.

Assuming the discriminator is on frequency, the frequency adjustment of the high-frequency oscillator is relatively simple. Apply the RF signal to the antenna input and view the meter indication on position 4. If the reading is not zero, adjust the oscillator frequency control for zero. Again, the zero indication at position 4 must be a sharp null between positive and negative peaks as the oscillator frequency control is varied through the correct setting.

If the local oscillator and discriminator are both off frequency, it becomes necessary to first align the discriminator to zero at the last IF frequency. In most receivers this is 455 kc, and requires a known source of signal at this frequency. Once the discriminator has been aligned, the oscillator frequency is adjusted as before.

Alignment of The Last IF Section

Where a fixed tuned filter such as the Motorola Permakay is used, for best results the last IF section and discriminator must be aligned to the center frequency of the filter band-pass. With the filter operating at a center frequency of 455 kc, the IF amplifiers and the discriminator must be tuned to the same frequency and this requires a signal of 455kc.

The Motorola test set (P8501) mentioned earlier in this lesson can be used to supply the 455 kc signal. This test set incorporates a signal generator, its frequency being controlled by a 455 kc crystal. This fixed frequency insures proper alignment of the discriminator and IF circuits. (The test set can be used to meter the various receiver circuits at the same time it is being operated as a signal generator.)

With the meter on position 1 or 2, the plate circuits of the first two stages of the last IF section are tuned for maximum indication. With the meter in position 2, the plate of the last amplifier is tuned for maximum. For these adjustments, the signal is injected into the grid of the first amplifier stage.

The meter switch is next turned to position 5. With a short across the secondary, the primary of the discriminator transformer is tuned for maximum. The short is then removed from the secondary and, with the meter switch in position 4, the secondary is tuned for zero.

Besides the adjustments of the discriminator transformer already mentioned, it is important to check its operation under normal signal conditions; while the discriminator may be tuned to the exact center frequency, it may still fail to operate properly in the presence of an incoming signal.

A more accurate check may be made by varying the frequency the same amount above and below the center frequency and observing the discriminator output. The amount of output should be the same (or within a reasonable balance) for equal deviations. Again the test set is convenient for this use.

For a deviation of 15 kc, crystals of 440 kc and 470 kc are alternately substituted for the 455 kc crystal in the test set and the readings in position 4 are noted. Of course the readings will be of opposite polarity, but a switch on the test set readily takes care of this condition. When the readings at 15 kc above and 15 kc below the center frequency are reasonably close, the discriminator will operate properly. If, however, one reading is considerably higher than the other we may expect the output to be distorted. Defective components as well as mistuned circuits may cause this condition.

Audio Output

In position 8, the test set indicates the amount of signal or noise at the receiver output. A speaker in the test set is connected to the secondary of the receiver's output transformer, and the voltage applied to the speaker is rectified and applied to the meter.

No attempt is made to calibrate the reading on the meter. By indicating the relative amount of signal or noise at the output, however, this reading is very convenient in making sensitivity and other checks of the receiver.

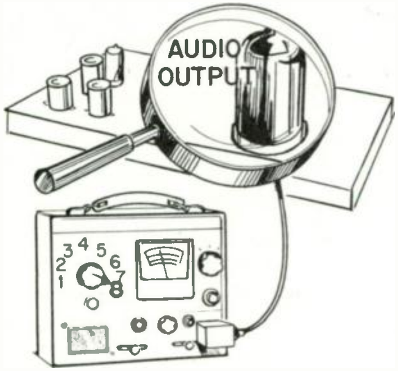

In Switch Position 8 the Motorola Test Set Indicates the Signal (or Noise) Voltage at the Speaker.

Supply Voltages

In some Motorola receivers, it is possible to use the Motorola test set to measure the B voltage available from the power supply. The test set includes the necessary circuitry to indicate this voltage when the switch is in position 7.

In this position, a series multiplier resistor makes the test set a 1000-volt DC meter---this applies to both the receiver and transmitter. The average B voltage at the receiver is between 180 and 200 volts, although some power supplies may have lower values. Whether or not a particular receiver will give an indication depends upon the internal wiring of the receiver. In order to indicate the B voltage, there must be a connection to the proper terminal of the meter socket. This connection to the proper terminal is not present in all receivers.

In our discussion of supply voltages, some consideration must be given to the A voltage (primary supply) as well as to the B voltage.

Although the test set does not measure the filament and heater voltage at the receiver, this voltage may be measured at the transmitter. (It is very simple to transfer the test set to the transmitter.) We shall speak more of this when we discuss the meter in the transmitter and when we study the test set in detail.

450-MC Receivers

While the average high-band and low-band receiver has many circuits which must be tuned to resonance, there are still others in the 450-mc receiver which require attention. These important circuits are in the multiplier stages, between the oscillator and first mixer. The receiver sensitivity depends upon the voltage applied from the oscillator-multiplier section to the mixer; hence, it is essential to provide a convenient but accurate method of adjusting these circuits to resonance.

The low operating frequency of the oscillator makes it necessary to use one or more stages of frequency multiplication in order to provide the proper signal to the mixer. It is not always possible to adjust the multipliers for resonance by watching the reading at the limiters, because the output of the multiplier section to the mixer may be low if the tuned circuits are far from resonance (the limiter reading due to an IF signal may be zero). A more positive method of tuning these multipliers must be found.

Because the multipliers are operated in class C (in order to provide a high output at the harmonic frequencies), the strength of the signal determines the amount of grid-leak bias. By measuring the grid current, then, an accurate indication of the RF level is realized. The necessary resistors and capacitors are included and connections are made to terminal of the meter plug.

A problem is encountered here, for there are no "free" terminals on the plug leading to the meter switching circuit. A convenient solution is to use an adaptor cable, installed between the meter and the receiver chassis. The multiplier grid circuits are now monitored in meter switch positions 4 and 5. Thus, with the adaptor cable installed, the multiplier stages of the 450-mc receiver are tuned for maximum by observing meter positions 4 and 5. For any particular receiver it is best to follow the specific alignment procedures as found in the instruction manual for that receiver.

Localizing Trouble by Using Meter Readings

Here is an example of how the intelligent interpretation of meter readings can be used to simplify

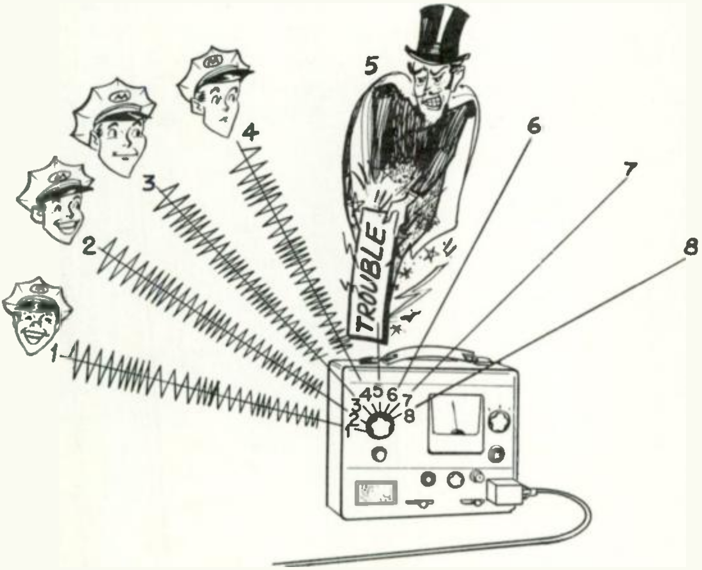

"Trouble" in the Two-Way Receiver can Usually be Pinpointed by the Readings of the Various Receiver Circuits.

service work. Suppose a receiver is "dead". No perceptible sound comes from the speaker, regardless of the settings of the squelch and volume controls. After making sure that the tubes are lit, the next procedure is to connect the test set to the receiver and observe the readings for all positions indicated in figure 1. Nearly normal readings in position 1, 2 and 6 immediately tell us that the circuits up to the limiters are probably working ok; we can momentarily eliminate them as a probable source of trouble.

The discriminator readings (4 and 5) are next observed. If they are not correct we immediately know that the trouble is between the first limiter and the discriminator. If, on the other hand, the discriminator readings seem normal, the fault is then in the squelch or audio circuits.

Additional elaborations may be made from the readings secured on the meters, but it is not the purpose of this assignment to present a complete trouble shooting procedure. The important point is that the meter plays a very prominent part not only in the alignment of the receiver, but in isolating all kinds of troubles and even pin pointing them to a particular section or circuit within the receiver. To paraphrase a popular saying, "the meter is the best friend a serviceman could possibly have."

Motorola has two test sets, the P8501 and the TU 546. This lesson describes the meter positions of the P8501 unit. The newer TU 546 test set has the same metering system, although all the switch positions may not be identical. Regardless of the test set used, the system and application remains the same. A later lesson describes both units in detail.

Switch Position	Circuit Location	Indicates	Average Indication	Usually Reads
#1	Grid of Last IF Amplifier	Grid Current Due to Signal or Noise	-0.1 to -1.0	Maximum
#2	Grid of First Limiter	Grid Current Due to Signal or Noise	-18 to -40	Maximum
#4	Discriminator Output	Discriminator Balance	0	0
#5	Rectified Current in Discriminator	Strength of Signal Applied	-12 to -16	Maximum
#6	Grid Current of Oscillator	Oscillator Activity	-12 to -40	Maximum
#8	Audio Output	Voltage at Speaker	Varies with Modulation	

Figure 2

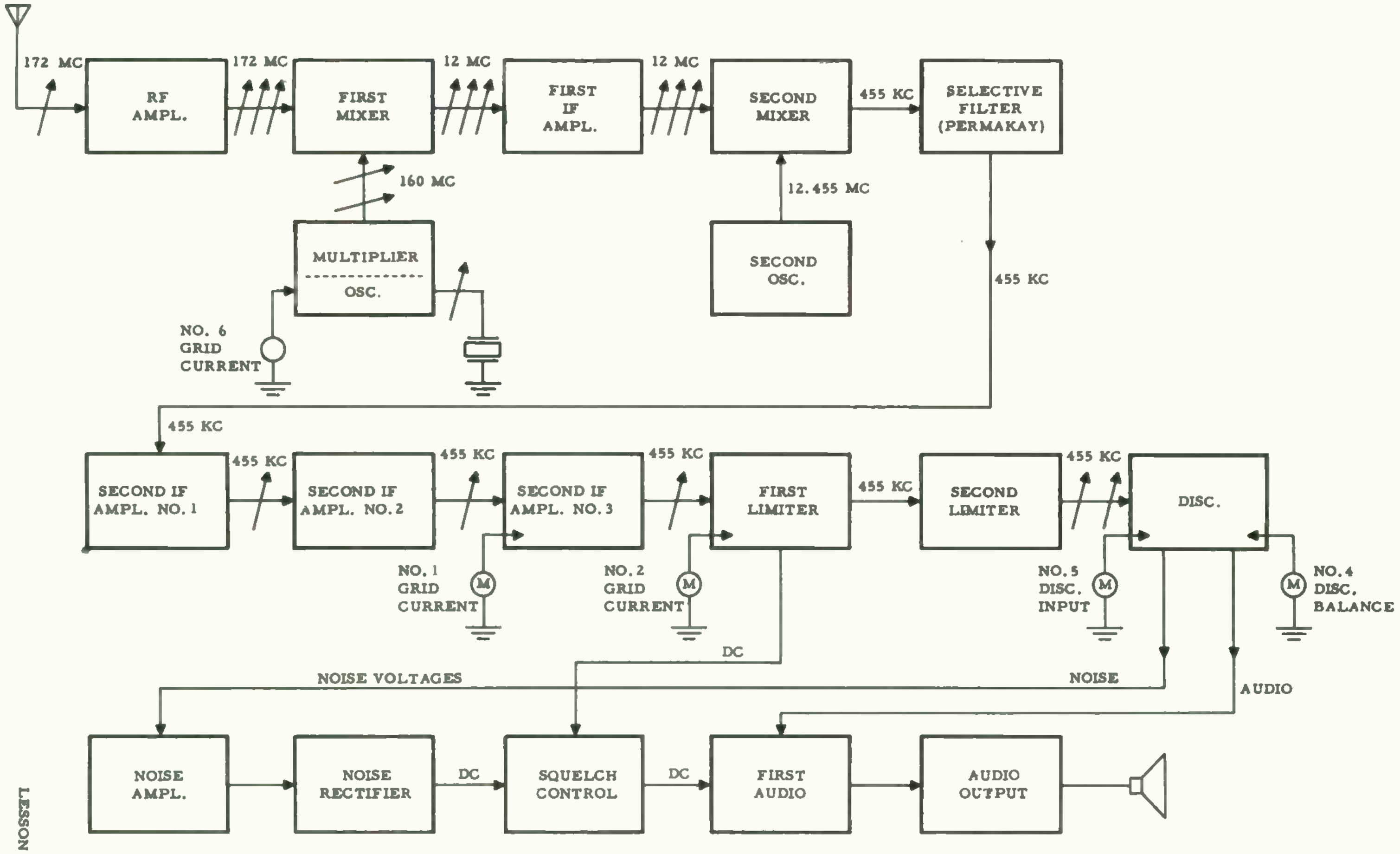
172 MC
RF AMPL.
172 MC
FIRST MIXER
12 MC
FIRST IF AMPL.
12 MC
SECOND MIXER
455 KC
SELECTIVE FILTER (PERMAKAY)
160 MC
MULTIPLIER
OSC.
NO. 6 GRID CURRENT
12.455 MC
SECOND OSC.
455 KC
455 KC
SECOND IF AMPL. NO. 1
455 KC
SECOND IF AMPL. NO. 2
455 KC
SECOND IF AMPL. NO. 3
455 KC
FIRST LIMITER
455 KC
SECOND LIMITER
455 KC
DISC.
NO. 1 GRID CURRENT
M
NO. 2 GRID CURRENT
M
NO. 5 DISC. INPUT
M
M
NO. 4 DISC. BALANCE
DC
NOISE VOLTAGES
NOISE
AUDIO
NOISE AMPL.
NOISE RECTIFIER
DC
SQUELCH CONTROL
DC
FIRST AUDIO
AUDIO OUTPUT

FIGURE 1.

Motorola Training Institute

4501 West Augusta Blvd., Chicago 51, Ill.

Please PRINT or use STAMP

Name ____________________ Student No. ______

Street ____________________ Zone ____ Date ______

City ____________________ State ________ Grade ______

EXAMINATION LESSON RA-9

1. Besides using various meter readings for trouble shooting a receiver, the serviceman uses these readings ____________________

2. Meters are often used in receivers to record grid current due to limiting action. This grid current is caused only by signals of the receiver operating frequency, and will be zero without a signal. TRUE ________ FALSE ________

3. Referring to Figure 1 of the lesson, the meter of position #6 shows zero current, but the filament and plate supply voltages are correct. The trouble is likely to be in the ____________________ stage.

4. With an unmodulated signal of the receiver operating frequency applied, as the oscillator grid circuit is tuned from "off" resonance to resonance, the reading of meter position 2 will probably (increase)(decrease).

5. A receiver is being aligned by observing the meter readings in position 2. Half-way through the procedure, the meter reading no longer shows any change as the front-end circuits are tuned. The probable trouble is ____________________.

   As a remedy, we may either ____________________
   or ____________________.

6. While observing meter position 4, which of the following are adjusted at some time or another in the tuning of a receiver?

   A. Discriminator primary. ________
   B. Discriminator secondary. ________
   C. RF circuits ________
   D. Oscillator frequency ________
   E. Oscillator grid circuit ________

7. In order to tune the primary of the discriminator transformer to exact resonance, it is desirable to prevent any interaction between the transformer windings. This may be accomplished by ____________________.

8. After each of the following, indicate the number of the metering switch position that may be used to adjust the circuit.

   A. Oscillator frequency ________
   B. Discriminator primary ________
   C. Oscillator grid tank ________
   D. Discriminator secondary ________
   E. Oscillator multiplier ________

9. Referring to figure 1 at the lesson, meter #1 shows a normal reading, but meter #2 shows no reading. What specific trouble(s) would you anticipate? ____________________

10. Using Figure 1 of the lesson, analyze the following meter readings found for a receiver and indicate that stage or stages of the receiver in which you would anticipate trouble.
    Meter positions 1 and 2, normal; Meter positions 4 and 5, zero; Meter position 6, -30.
    The trouble is in ____________________.

national

MOTOROLA

RADIO COMMUNICATIONS

service

A TWO-WAY RADIO COMMUNICATIONS TRAINING PROGRAM

LESSON RA-10
FM RECEIVERS

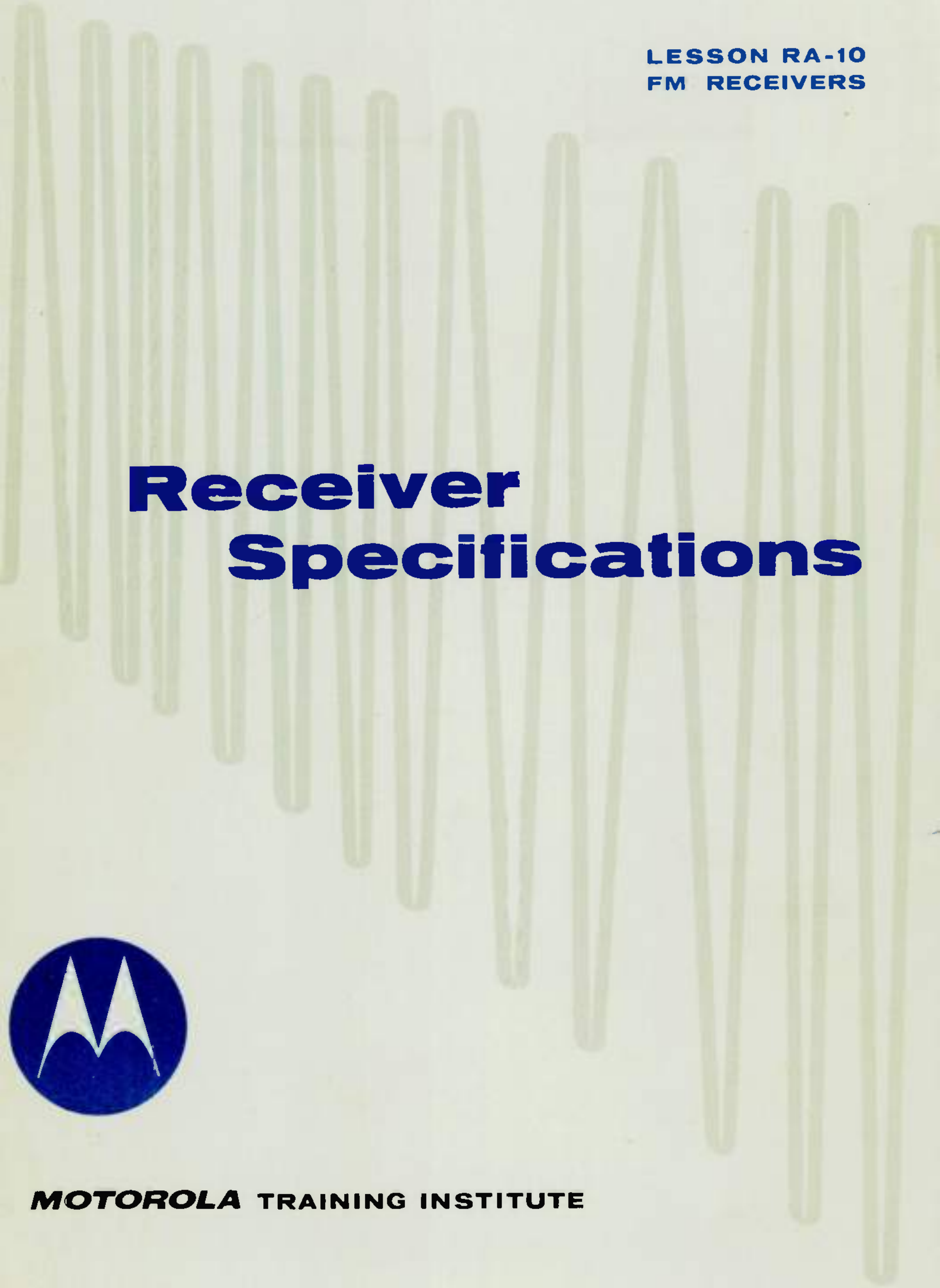

Receiver Specifications

MOTOROLA TRAINING INSTITUTE

A TWO-WAY RADIO COMMUNICATIONS TRAINING PROGRAM

LESSON RA-10
FM RECEIVERS

Receiver Specifications

—one of a series of lessons on two-way FM communications—

MOTOROLA TRAINING INSTITUTE
4501 W. AUGUSTA BLVD., CHICAGO 51, ILLINOIS
APPROVED BY THE STATE OF ILLINOIS
DEPT. OF REGISTRATION AND EDUCATION

PREFACE

This is one lesson of a complete Motorola Home-Study Course which presents to the Service Technician both the principles of operation and the maintenance of two-way FM radio systems. The program covers mobile, portable and base station equipment, including the latest transistorized units.

RECEIVER SPECIFICATIONS
LESSON RA-10

TABLE OF CONTENTS

NOTICE

Diagrams and figures referenced in text are "fold-outs" in back of each lesson, for use while studying. The Examinations are also there.

Two-Way Radio in the cab of an overhead crane represents but one of the places you'll find this versatile working tool in industrial and manufacturing plants – and you'll also hear how it can boost productivity by 10-20% – even up to 50% by better coordination of men, machines and materials.

RECEIVER SPECIFICATIONS

Lesson RA-10

Why "Specs" Are Important

The receivers of a two-way communications system, which have been performing well in their particular service, suddenly begin to pick up signals and interference from another system. Furthermore, these transmissions are continuous, being picked up as regularly as the signals of its own transmitters.

An investigation reveals that the interference comes from a local two-way system just placed into operation on a channel close to the operating frequency of the receivers.

The specifications---generally called "specs"---indicate that the receivers' selectivity is not adequate to reject transmissions on adjacent or alternate channels. Thus, the receivers are performing "as well as can be expected"; they just do not have enough selectivity to reject the interfering signals.

From the service viewpoint, the technician must realize that all receivers are not alike. For example, some receivers are designed for operation where there are signals in the adjacent and alternate channels---others are not.

In order for the serviceman to predict whether a receiver will provide normal service in any given application, he must be able to interpret the specs for that receiver and determine its intended use. With this thought in mind, we shall discuss in this lesson the more important receiver specifications and considerations. Because we have already mentioned selectivity, we shall start with this particular spec.

Selectivity

In modern applications of the communications receiver for mobile operation, selectivity is becoming increasingly important.

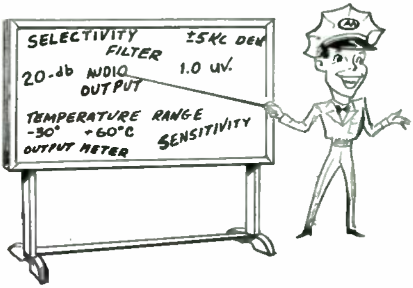

The Successful Service Technician is Well Acquainted with Receiver Specifications.

Because of the wide variety of uses being made of such equipment, it is important for the receiver to have the correct selectivity characteristics for each application. By interpreting the selectivity specs for a particular receiver, we can determine its recommended system operation.

Table 1 gives the specs of a Motorola receiver which is intended for operation within the 25-54 mc range. Three models, having the suffixes S, X, and W, are available. These models are basically the same except for the Permakay filter used. (In our discussion of Motorola's Permakay filter, we said different models of filters made it possible to equip the receiver with any required degree of selectivity.) The selectivity and use of these receiver models are given in the first three lines of table 1.

The S model is to be used in systems having a 5-kc deviation and a channel spacing of 20 kc. (This is also evident from the selectivity column.) The "-100 db attenuation at 18 kc" indicates adjacent channel application--this model is designed to operate with a minimum deviation and with close channel spacing. This receiver, however, will not give good results when used in a system having a 15-kc deviation. Its highly selective Permakay filter will accept only a narrow band of frequencies and much of the modulation energy (deviations) will not get through to the discriminator. Thus, the output from the receiver will be both weak and distorted.

The X model, on the other hand, uses a filter with comparatively little selectivity; the attenuation is 100 db down at 120 kc. This receiver could never produce good results in adjacent channel applications. Signals on adjacent channels receive comparatively little attenuation in the filter of this receiver and they will be reproduced in the speaker or, at least, will interfere with the desired signals.

The S and X models represent the limits of selectivity likely to be encountered in modern two-way communications receivers, most of which have a selectivity somewhere between these values. The W model receiver (table 1) has a designed deviation acceptance of 15 kc and, with an attenuation of 100 db at ± 32 kc, this receiver is suitable for adjacent channel operation, where the channel spacings are 40 kc.

Although an attenuation of 80 or 90 db is considered adequate in most applications, 100 db (as used in table 1) provides even better protection from interference. This attenuation, which represents a voltage ratio of 100,000, is sufficient to reject unwanted signals that may be present. When the rejection is as high as 100 db, only those interfering signals which are of unusually high amplitude are likely to have any effect on the receiver.

Although it is seldom necessary for the service technician to measure the overall selectivity of the receiver, it is possible for him to do so without a lot of expensive test equipment. In addition to the standard signal generator, a frequency measuring device is required. The procedure is as follows.

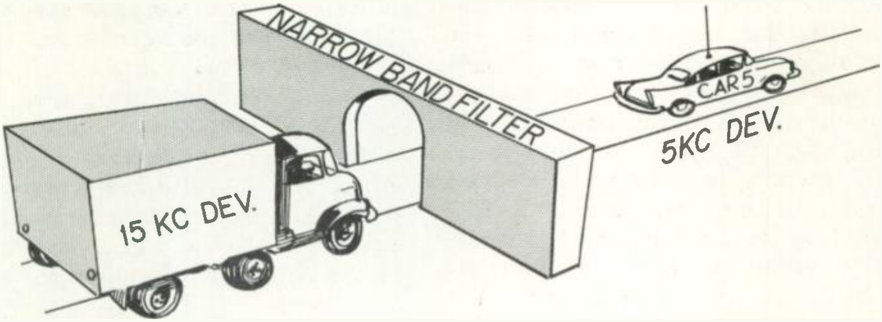

A Receiver Having a Narrow Band Filter is Not Intended for Use in a System Employing 15KC Deviation.

Set the generator to the channel frequency of the receiver and adjust the output to the level corresponding to the rated 20-db quieting sensitivity. Note the reading on the test set at position 1 (the reading at position 2 will probably be in saturation). Next increase the generator output 100 db---100,000 times greater---and vary the generator frequency above and below center until the reading at position 1 is the same as that recorded for the channel frequency.

Measure the frequencies of these off-channel signals, using the frequency meter. It is not necessary to measure the signals at the RF level. Instead, the frequencies at the last IF may be determined, for the frequency variation at the last IF is the same as that at the receiver input. These two frequencies indicate the bandwidth of the receiver at the 100-db points. [1]

Sensitivity

While the "20-db quieting" sensitivity does not appear as a spec in some standards, it provides the quickest and most efficient method to use when servicing receivers. For this reason, receiver specifications should always include sensitivity expressed in terms of the amount of signal (in microvolts) required to produce "20 db quieting", that is, to reduce the noise coming from the speaker by 20 db. Because 20 db represents a voltage ratio of 10 to 1, it becomes a convenient means of determining the amount of noise reduction.

To make this 20-db quieting test, first place an AC volt-meter

---

1. See "Receiver Selectivity and Sensitivity Measurements".

across the speaker voice coil, unsquelch the receiver, and adjust the noise output voltage by means of the volume control for a convenient reading on the meter, such as 0.5 volt. Now apply a signal of the channel frequency to the receiver input and gradually increase the signal level until the noise output decreases to one-tenth the original reading; this will be 0.05 volt, if the original setting was 0.5 volt. (In lieu of the AC meter, the Motorola P8501A Test Set may be used in switch position 8, to indicate the relative output at the speaker. Adjust the volume control for a reading of 10 on the meter and increase the signal level until this reading decreases to 1.)

Because the noise output, in either case, is but one-tenth its original value, the noise has been reduced 20 db. The amount of signal applied to the receiver input, as read on the calibrated output indicator of the signal generator, is the rated sensitivity of the receiver. The guaranteed sensitivity of Motorola receivers usually ranges from 0.3 mv (microvolts) for low-band receivers to 1 mv for 450-mc receivers.

The above test, of course, will be only as reliable as the accuracy of the generator output calibration. Also, for a valid measurement, the generator output impedance must match the input impedance of the receiver--50 ohms for most receivers.

The value of the test also depends upon the point where the receiver output is measured. By measuring the voltage at the voice coil, the operation of the entire receiver is taken into consideration. If the voltage at the discrim-

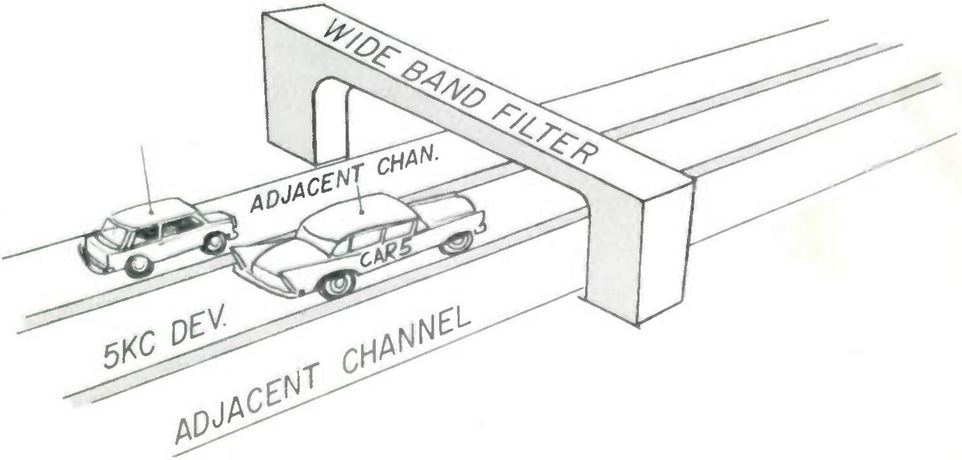

A Receiver Having a Wide Band Filter Will Not Reject the Adjacent Channels in Split Channel Operation.

inator output is measured, however, we still do not have an indication of what takes place at the speaker--which is what we are chiefly interested in.

When making tests for receiver sensitivity, we must remember that every method has certain shortcomings and that no method can give the final, complete picture. The actual operating selectivity and sensitivity are affected by a number of additional factors, such as desensitization, intermodulation, spurious response, squelch sensitivity and noise level.

Only the experienced engineer, using a lot of expensive test equipment, can fully evaluate the receiver and even then, the actual operation of the receiver under all conditions must be the final test of its worth.

Frequency Stability and Temperature Range

A high degree of frequency stability is one of the most important requirements of a communications receiver. The most detrimental factor to frequency stability is temperature. The relationship of frequency stability to temperature changes may be expressed in several ways. As given in table 1, for example, a certain Motorola receiver operating in the 25-54mc range has a stated frequency stability of "±750 cycles for temperature changes between -30° C and +60° C, referenced to +25° C." This means that, within this temperature range, the oscillator will not vary more than 750 cycles from its frequency at 25° C.

A receiver with this degree of frequency stability will undoubtedly operate well at all times. A receiver with less stability may work most of the time, but when the temperature of the equipment reaches the extreme ranges of hot and cold, reception may be poor or even nonexistent.

One late model Motorola receiver, designed for operation in the 450-470 mc band, has a stability (controlled by its AFC circuits) which is within ±0.0004 per cent of the transmitter frequency! While the crystal keeps the oscillator relatively close to the channel frequency, the action of the AFC circuit is used to swing the oscillator still nearer to the correct frequency, thus providing positive reception under the most adverse conditions.

A stability of 0.0004 per cent at this frequency means that the receiver will be within 2 kc of the transmitter frequency. At 450 mc, this is sufficiently close to assure normal reception without a loss of sensitivity or any degradation in performance.

A check can be made of the frequency stability of a receiver if we know the amount of voltage produced at the discriminator output for a given change of carrier frequency. It is not necessary, from a practical standpoint, to check the discriminator output for all values of frequency variation. We can assume that, within a reasonable range, the discriminator output will be linear. That is, if a 15-volt output is produced by a change of 15 kc, 1 volt represents a variation of 1 kc, 5 volts means a 5-kc deviation, etc.

By installing crystals of 440 and 470 kc in the test set and measuring the discriminator voltages, we can obtain an immediate calibration of the discriminator response. We can normally expect, as a minimum, a 15-volt output for a 15-kc deviation, and for convenience we will assume that the receiver being tested produces an output of exactly 15 volts for input signals of either 440 or 470 kc (±15-kc variation).

We are now ready to check the frequency stability of the receiver. First, apply a signal of the channel frequency to the receiver input and adjust the local oscillator frequency for a zero discriminator output. Now, if the applied signal has a constant frequency, any change in the high-frequency oscillator will produce a change in the discriminator output. For example, if the oscillator signal which is applied to the mixer changes 1 kc, the first and second IF frequencies of the receiver will also change 1 kc. This 1-kc change in the last IF will cause a 1-volt variation in the discriminator output.

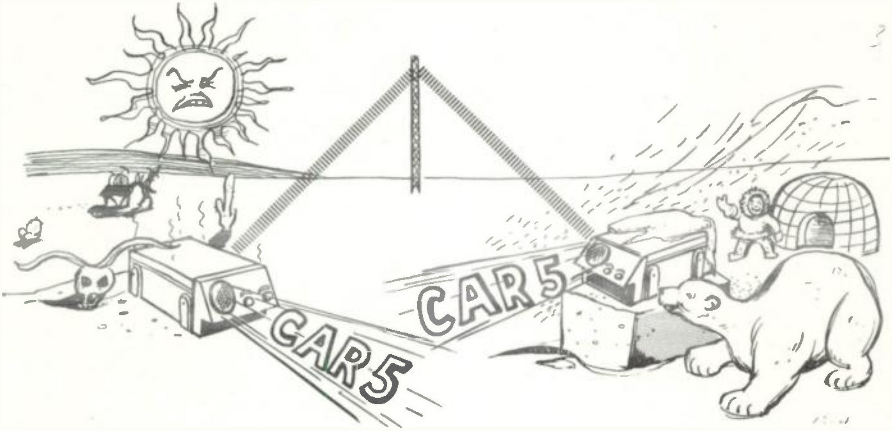

A Receiver with Good Frequency Stability will Work Equally Well when Hot or Cold.

By means of this procedure, it is possible to determine (1) the degree of frequency variation under extreme conditions of hot and cold weather operation, (2) the frequency drift over a long period of time, or (3) how long a warm-up period is required for the receiver to reach the correct operating frequency. The accuracy of this test, however, is limited by the stability of the RF signal source, for any shift of the applied RF will cause a corresponding change in the discriminator reading. Therefore, it is essential to provide a test signal of extremely high stability.

Spurious and Image Frequency Response

Most Motorola receivers have ratings of more than 100-db attenuation of all spurious response, including the image frequency. Because of higher power ratings of transmitters and the crowding of more and more signals into the same area, the problem has lately become more acute, and the ability of a receiver to reject these unwanted responses often determines the difference between poor performance and successful operation.

A rejection of more than 100 db for all spurious responses insures good reception even in the most overcrowded metropolitan areas. In only a few instances has this problem been such as to require different frequency assignments or relocation of antennas. On high-frequency bands such as 450-470 mc, where channel assignments are farther apart and transmissions are not as powerful, rejections of 80 or 85 db are usually satisfactory.

Squelch Sensitivity

In the preceding lesson we saw how the squelch, to some degree, determines the receiver sensitivity; the receiver cannot reproduce a message unless the squelch is open. Squelch sensitivity must therefore be better than receiver sensitivity; the squelch must open for signal inputs which are even lower than the stated "20-db quieting" sensitivity of the receiver. The squelch should be open when the signal reaches a level producing 3-4 db of quieting. The guaranteed squelch sensitivity of most Motorola receivers ranges between 0.1 and 0.3 uv.

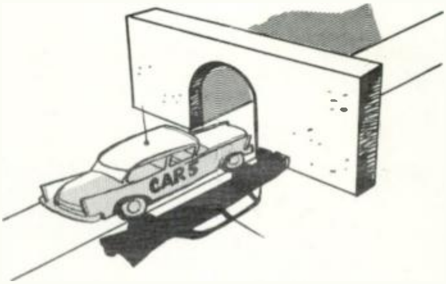

The Receiver Tuned Circuits Must Reject the "Image" and Other Undesired Signals.

Squelch sensitivity can be ascertained by checking the first audio stage (or by listening to the speaker) and determining at what value of signal input the audio tube is unbiased. For this check, the squelch control must first be adjusted to the point where the noise in the speaker is just quieted. Any additional advance of the squelch adjustment increases the amount of signal needed to open the squelch, thus lowering the threshold squelch sensitivity.

Audio Ratings

While the audio system of a communications receiver does not require the fidelity of a "hi-fi" system, it should have good response at the voice frequencies (300-3000 cps) if messages are to be intelligible. In order to restore these voice frequencies to their original balance, the FM receiver must have a deemphasis network rated at "6 db per octave." This means that, where one frequency is twice as high as another, the higher frequency must be 6 db down in the receiver response.

A "Tight" Squelch Adjustment Makes the Receiver Insensitive to Weak Signals.

The audio power output for the receiver of figure 1 is 2 watts with less than 10 per cent distortion. This power is delivered to a 3-ohm voice coil. Other receivers may have different audio power ratings, depending upon the particular requirements of the service in which they are to be used.

Antenna Considerations

An antenna is considered to have the same characteristics when it is used with a receiver as it has when used with a transmitter; power gain, directivity, and similar factors apply in both cases. The antenna and transmission line must match the input impedance of the receiver as well as the output impedance of the transmitter if the same antenna is used for both, which is usually the case in two-way communications.

Without a match between the antenna system and the receiver, it is impossible to transfer maximum energy to the receiver input. A 50-ohm impedance is most common for transmitter outputs, receiver inputs, transmission lines and antennas.

Reserve Performance

The rated sensitivity of a receiver may be conservatively stated by the manufacturer or it may refer to the maximum sensitivity attainable by the receiver. In the latter case, the receiver will operate with the specified sensitivity only when the tubes are up to maximum gain and when the circuits are peaked to their maximum settings. Such a receiver can be expected to have a somewhat lower sensitivity in actual use.

As soon as the tubes or other components show their first signs of aging, the sensitivity of the receiver is noticeably lower and when the circuits change from their maximum settings (due to vibration or changes of temperature and humidity), the receiver performance is somewhat less than maximum. Considerable--and almost continuous--servicing is required in order to maintain the system at maximum operating efficiency. We say that such a receiver shows very little "reserve performance."

Reserve performance is most evident when the given receiver specifications are not the maximum attainable, but are the average that may be expected from the unit. As an example, a receiver may have a specified sensitivity of 0.5 microvolt, but with selected tubes and with every circuit on exact frequency the sensitivity may be considerably better (lower) than this figure. Then, when normal aging of the tubes takes place, or if a circuit or two is not on exact frequency, the receiver will still operate with its stated sensitivity.

Any large amount of reserve performance is difficult to build into the front end of the modern receiver and here is where system reserve becomes important. Where the signals available and the power outputs of the various pieces of equipment are supplying signals just sufficient to maintain contact, any degradation will affect the normal functioning of the system.

Any appreciable decrease in amplification of the front-end stages will usually cause some loss in performance. The gain of these stages is kept low in order to minimize the likelihood of spurious response, intermodulation and desensitization.

A good reserve, however, can be built into the last IF section of the receiver. Then, when tubes undergo normal aging, top performance can still be obtained. Such a receiver is said to have good "reserve".

Effects of Temperature and Humidity

During times of emergency, other systems of communications are sometimes disrupted and two-way equipment is often the only means of communication available. It then becomes vitally important for this equipment to operate under all conditions of heat, cold, and rain. It is also desirable that when the equipment gets wet but eventually dries out and is returned to service, it operates as well as it did originally.

Extremes of temperature and humidity often reduce the sensitivity of the most carefully designed equipment, resulting in changes in the operational characteristics of different components within the receiver. The use of units which are least affected by these factors is an important consideration in connection with any two-way equipment.

One of the first effects noticed at low temperatures is the reduction of capacitance of electrolytic capacitors. At zero degrees F, the capacitance may be too low to prevent a hum from being heard in the speaker. Certain types of bypass capacitors, too, lose their capacitance at lower temperatures, resulting in instability and loss of gain.

A Full Quota of Audio Power from the Speaker Assures Readability of the Message.

Paper capacitors are particularly susceptible to continued moisture and they gradually develop leakage resistance. Mobile communications receivers must use other types of capacitors that are sealed from the effects of moisture.

Temperature compensating capacitors are often used in circuits which are frequency sensitive to temperature. When these units are used, the tuned circuits maintain a more constant resonant frequency with changes of temperature.

The above examples illustrate the importance of using material least affected by changes of temperature and humidity. Selection of proper material is economical, too, in that such equipment continues to operate over a longer period of time.

Receiver Construction; Replacements

Aside from their specified electrical characteristics and their ability to withstand reasonable changes in temperature and humidity, the various units and component parts used in a communications receiver must always exhibit sturdy mechanical properties, and they must be properly placed (or replaced), securely mounted, and adequately shielded where the occasion requires it. These considerations become important factors toward maintaining continuous, trouble-free operation of any receiver. They are particularly important in the case of two-way communications receivers.

Severe jarring or continuous vibration of the chassis can cause the parts to shift position if they are not mechanically sturdy and properly mounted. A shift in position of parts or wiring may detune the circuits or allow interaction between circuits that should be isolated from each other. Under severe strain, the leads of a resistor or capacitor may pull loose from the unit. In exaggerated cases of vibration and shock, variable capacitors or coil tuning slugs may be jarred out of position; transformers and other heavy units may even break loose from their mountings.

Closely associated with the subject of parts placement is the shielding required between certain circuits, particularly in the case of the oscillator and its multipliers. Currents (at either the oscillator fundamental or any of the unused harmonics) can cause spurious response if they are allowed to enter the RF, IF, or mixer circuits of the receiver. These sections are usually shielded, both magnetically and electrically, and located so that they are physically isolated from the rest of the receiver.

All these factors must be kept in mind by the serviceman when he is either servicing the equipment or making replacements. The importance of the exact position of parts in the front end of the receiver cannot be overstressed. The serviceman must be very careful in probing around this section, so that he does not change this arrangement. When making any replacements, he should first make a sketch of each component (mentally at least), so that when he is finished, each component and wire is in the same position it occupied originally.

When making any replacement, all the characteristics of the replacement unit or part must be exactly the same as those of the original. This rule applies particularly to capacitors, where it is seldom enough to merely use a replacement unit having the same voltage and capacitance ratings. The replacement must be one recommended by the manufacturer of the equipment, and this usually means it must be an exact duplicate of the original. It must conform to all specifications.

Obsolescence and Flexibility

Obsolescent equipment is equipment which is tending to become out of date. A receiver may be just as good as it ever was, but changing times and conditions require certain modifications to be made if it is to continue operating with maximum efficiency in the face of new frequency allocations, for example, or changes in service requirements. Thus, standards which are set up for today's equipment may undergo radical changes within a few months or a year from now, and this applies particularly to frequency assignments within a band.

An example of this situation was given at the beginning of this lesson. Equipment designed for alternate channel operation (with no transmissions on adjacent channels) does not require a high degree of selectivity. It is not uncommon, however, for this situation to change. After a time, adjacent channel assignments are often made in the same area. Unless the equipment can be adapted to this new operation, severe interference problems arise. The equipment has now become obsolete.

Another example of obsolescence is seen when equipment designed to be operated from a 6-volt battery and ignition system is to be used on a 12-volt system.

Both of these tendencies toward obsolescence have been overcome in Motorola equipment. Since the selectivity in Motorola receivers is determined by the Permakay filter, all that need be done in the first example is to change to a more selective filter; the receiver is then ready to operate successfully under the new conditions.

In the matter of primary power changes, Motorola has devised a method which permits the same equipment to be used on either 6 volts or 12 volts. This method, which is more fully discussed in the section on power supplies, makes use of a special power cable and fuse which can be readily installed in any mobile equipment. (Conversely, this equipment can be changed back just as easily, from 12 volts to 6 volts.)

While the latter example concerns flexibility rather than obsolescence, it illustrates the interrelationship of the two--the more flexible is the equipment, the less it tends to become obsolete.

Mounting The Receiver

While the mobile receiver is packaged as a single unit, the complete communications installation consists of three units--the receiver, the transmitter, and the power supply. These three units are built on separate chassis but combined into one complete assembly within a single housing.

In some installations, the receiver, transmitter and power supply are trunk mounted, with the speaker, microphone and operating controls contained in a control head, mounted near the driver. Or, the entire equipment may be built into a single compact unit and mounted near the driver.

In any type of installation, the housing containing the equipment should itself be firmly mounted. In extreme cases, the housing may be shock mounted in order to avoid excessive vibration of the equipment.

Conclusion

This lesson on specifications concludes the receiver section of the training. (Receiver service problems will be taken up in later assignments.) The next section is devoted primarily to the study of transmitters. The transmitter lessons follow the same general arrangement that was used in the receiver section. Starting with an overall block diagram, the entire transmitter is discussed in the first lesson in order to show its relationship to the receiver and the interrelationship of its various stages. These individual stages--oscillator, phase modulator, multipliers, etc.--are then considered separately and studied in detail, as in the receiver section.

STUDENT NOTES

TABLE 1

RECEIVER SPECIFICATIONS -- FREQ. = 25 to 54 MC.

MODELS	TA111B-S	TA111B-W	TA111-X
CHANNEL SPACING	20 kc.	40 kc.	120 kc.
SELECTIVITY	-100 db @ ±18 kc.	-100 db @ ±32 kc.	-100 db @ ±120 kc.
MODULATION ACCEPTANCE	±5 kc.	±15 kc.	±15 kc.
SENSITIVITY	Less than 0.35 microvolt for 20 db quieting; 50 ohms rf input impedance		
FREQ. STABILITY	±750 cps of center -30° to $+60^\circ$ C., $+25^\circ$ C reference		
SPURIOUS AND IMAGE REJ.	More than 100 db		
SQUELCH	Noise comp, adjustable, threshold sensitivity of .1 microvolt		
AUDIO OUTPUT	2 watts to 3 ohm v.c. less than 10% distortion		
AUDIO REPSONSE	+1, -8 db of 6 db/octave deëmphasis, 300-3000 cps.		

FIGURE 1

Motorola Training Institute

4501 West Augusta Blvd., Chicago 51, Ill.

Please PRINT or use STAMP

Name ______________________________ Student No. ______

Street ___________________ Zone _____ Date ______

City _______________ State ________ Grade ______

EXAMINATION LESSON RA-10

1. The selectivity of a receiver is rated "60 db down at 40 kc". This receiver is operated in an area having unusually strong signals on the adjacent channels, which are spaced 40 kc from the operating frequency. This receiver (will)(will not) be able to reject the adjacent channel signals.

2. A Motorola receiver designed for 5-kc deviation operation is used in a 15-kc deviation system. The receiver output will be: (check correct answers).

   Loud __________ Weak __________ Normal __________ Distorted __________

3. When the various receivers in a complete system were monitored continuously, it was noted that the reading on position 4 would vary slightly from one transmitter to the next. Two things could cause this effect. (1) ______________________________
   (2) ______________________________.

4. A particular Motorola receiver originally intended for wide band operation must now have greater selectivity, due to additional systems being placed on the adjacent channels. The most practical approach to acquire the greater selectivity is to replace ______________________________.

5. Without a signal applied to the receiver, the squelch is opened and the volume adjusted for a meter reading of 1 volt AC at the output. An unmodulated RF, applied to the input, is increased in amplitude until 20 db of quieting is realized. The meter reading will now be ____________________

6. The squelch sensitivity of a receiver changes from 0.3 to 1.0 uv due to some defect within the squelch circuit. The weakest signal that will now be heard is:

   0.3 uv. __________ 1.3 uv. __________ 1 uv. __________ 0.7 uv. __________

7. The stability of the oscillator in a communications receiver is given as 0.0005%. The operating frequency of the oscillator is 155.0 mc at a temperature of +25°C. This oscillator should not swing higher than __________ mc, or lower than __________ mc.

8. In measuring the power output of a receiver, the maximum voltage produced at the 3-ohm voice coil is 2.5 volts. The power output is ________________ watts. SUGGESTION: use the formula W equals E^2 divided by R.

9. The guaranteed 20-db quieting sensitivity of a receiver is 0.4 uv. This means that a signal of 0.4 uv or greater will cause ______________________________
   ______________________________ at the receiver output.

10. A generator is to be used to measure the sensitivity of a receiver. The rated receiver input impedance is 50 ohms. The output impedance of the generator is 50 ohms. Will the results be valid? Yes ________
    No ________

national

MOTOROLA

RADIO COMMUNICATIONS

service

A TWO-WAY RADIO COMMUNICATIONS TRAINING PROGRAM

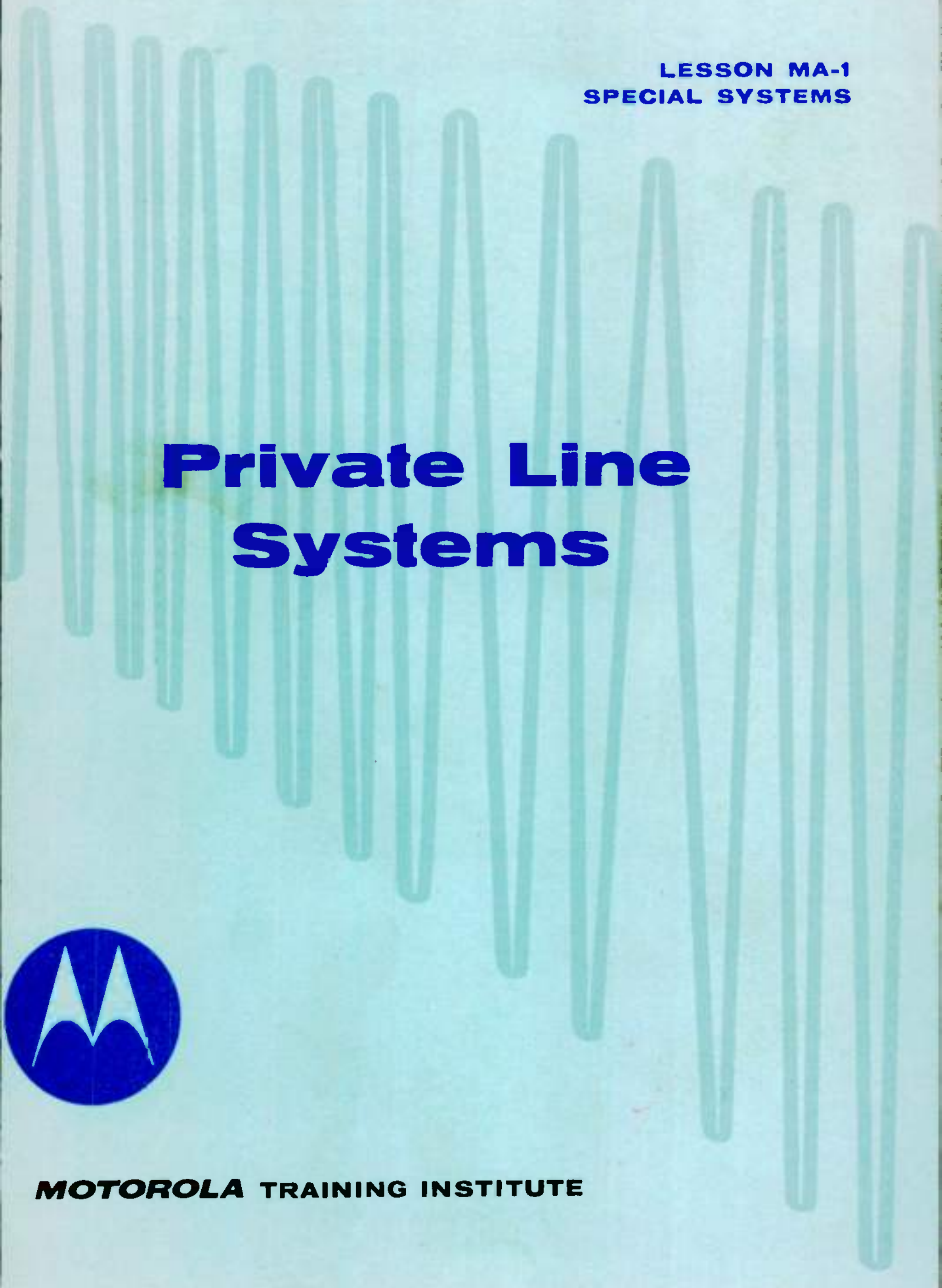

LESSON MA-1
SPECIAL SYSTEMS

Private Line Systems

MOTOROLA TRAINING INSTITUTE

A TWO-WAY RADIO COMMUNICATIONS TRAINING PROGRAM

LESSON MA-1
SPECIAL SYSTEMS

Private Line Systems

—one of a series of lessons on two-way FM communications—

MOTOROLA TRAINING INSTITUTE
4501 W. AUGUSTA BLVD., CHICAGO 51, ILLINOIS
APPROVED BY THE STATE OF ILLINOIS
DEPT. OF REGISTRATION AND EDUCATION

PREFACE

This is one lesson of a complete Motorola Home-Study Course which presents to the Service Technician both the principles of operation and the maintenance of two-way FM radio systems. The program covers mobile, portable and base station equipment, including the latest transistorized units.

TWO-WAY COMMUNICATIONS

PRIVATE LINE SYSTEMS

LESSON MA-1

TABLE OF CONTENTS

NOTICE

Diagrams and figures referenced in text are "fold-outs" in back of each lesson, for use while studying. The Examinations are also there.

Like service organizations in other fields, those involved in the maintenance of two-way radio also realize the many advantages of having two-way radio.

TWO-WAY COMMUNICATIONS
PRIVATE LINE SYSTEMS

Lesson MA-1

Introduction

We have previously referred to the crowded conditions associated with two-way mobile communications, and we pointed out that this congestion has been growing continuously, so that many services are today compelled to share the same channel. Several taxicab companies for example, may find themselves required to use the same channel, if they wish to have two-way communications.

Under these conditions, with the usual carrier-operated squelch, the mobile operator must listen to all messages on the channel, although only a small percentage of them may be directed to him. This is very bothersome.

One solution to this problem is to use Motorola "PRIVATE LINE" radio equipment. With this equipment, the only time any sound reaches the loud-speaker is when the carrier belongs to one of the stations within the system. The speakers are silenced at other times. As soon as a "system" transmitter comes on the air, however, the receiver squelch is opened and the receiver is subject to the same operating conditions as any other receiver.

Private Line radio operation is achieved by means of a unique squelch system which silences the audio section of the receiver. The squelch is not operated by the carrier and noise reduction, as is usually the case, but by a low-frequency audio tone which constantly modulates the carrier. This audio tone is below the voice range of 300-3000 cps, however, and special filters are used to eliminate it in the audio stages of the receiver. By means of highly selective circuits and a high-Q vibrating reed, the squelch is made insensitive to all audio frequencies except that one to which it is tuned. Ten audio frequencies (between 100 and 136.5 cps) are available for this purpose. Another reed is incorporated in the transmitter, and its frequency must be the same as that of the reed in the receiver. It is thus possible to have as many as ten different systems on the same channel and still maintain "Private Line" radio operation for each system.

Advantages of Private Line Operation

The main advantage of Private Line radio operation, as we have

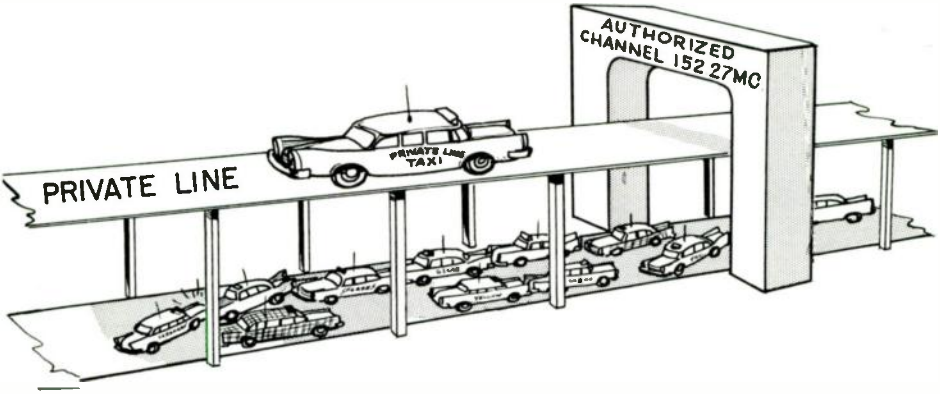

Although Private Line Radio is on the Same Channel and in the Vicinity of Other Systems, it Effectively Provides a New and Nuisance-Free Channel.

just seen, is that the operator is freed from the necessity of listening to all the messages of other systems operating on the same channel.

Another advantage of Private Line radio systems is that the equipment is continuously operated at full squelch sensitivity. With the conventional squelch system the sensitivity of a receiver squelch is subject to the setting of the squelch control. With the correct setting of this control, a weak signal will open the squelch. If the squelch control is advanced too far, however, the squelch sensitivity is lowered and this same signal may not be strong enough to open the squelch circuit.

The tone-operated squelch permits the sensitivity of the receiver to remain at its full value; the squelch setting is not adjustable. In Private Line radio operations, the squelch will always be open for the weakest signal that is readable.

With his receiver squelched and in the absence of the carrier with its correct squelch tone, the operator is not only relieved from the necessity of listening to other signals on the same channel, he is also oblivious of interference signals, intermodulation and image response. Such "interference" may still be taking place in the receiver circuits, for this portion of the receiver is operating at all times, but the speaker is silenced and the operator does not hear it. As soon as his receiver is activated, by the correct carrier and tone squelch, however, it will operate in a normal manner, being subject to all the interference signals listed above.

Basic Principle of Operation -- Transmitter and Receiver

Figure 1 shows the block diagram of a Private Line transmitter which is designed to operate in the high band (144-174 mc). The same system is also used for low-band (25-54 mc) and 450-mc equipment.

The transmitter block diagram is the same as that previously studied with the exception of the tone oscillator (TK 349), which generates a low frequency audio tone, somewhere between 100 and 136.5 cps. The exact frequency is determined by the reed installed. Motorola uses the term "VIBRASENDER" to identify this particular oscillator reed.

The tone oscillator output is applied to the phase modulator together with the audio modulation. Hence, the coding tone will be present at the transmitter output as long as the equipment is on the air.

Figure 2 shows the block diagram of a Private Line receiver. To be consistent with the transmitter of figure 1, the diagram is that of a high-band receiver. The entire front-end, low-frequency IF, limiter and discriminator sections of the receiver are the same as for any conventional receiver. The point of difference in this Private Line receiver, however, is to be found in the squelch circuitry. The discriminator output contains the audio message which is to be reproduced; it also contains the Private Line tone signal. This output is applied both to the low-pass amplifier and to the audio amplifier. Filters in the low-pass amplifier reject the higher audio signals, passing only those frequencies below 300 cps. The coding tone thus reaches the limiter amplifier where it is further amplified. The amplification is sufficient to properly drive the resonant reed, which Motorola calls the "VIBRASPONDER."

When the correct tone is received, the reed is energized, closing contacts so as to apply the negative DC bias voltage from the limiter to the grid of the DC amplifier stage. This negative voltage disables the squelch, allowing the receiver audio section to operate normally. When the correct tone is not present to operate the vibrasponder, the negative voltage from the limiter does not reach the DC amplifier, the squelch is closed, and the receiver is silent. Thus, the only time that the receiver audio section is operative is when a tone of the proper frequency is received.

The highest frequency used for the audio tone (136.5 cps) is considerably lower than the audio voice range used in two-way communications (300-3000 cps). It is therefore improbable that any normal voice transmission will open the squelch of the Private Line receiver.

Transmitter Circuit Analysis

Figure 3 shows the complete schematic of the tone oscillator used in a typical Private Line transmitter. The output of this oscillator is applied to the modulator so that the RF carrier will be modulated by the coded audio tone signal whenever the transmitter is on the air, and this signal operates the squelch in the receiver. A triode-pentode tube (V201) is used as a resistance coupled type of oscillator, with the Motorola Vibrasender resonant reed controlling the frequency. This reed is a very high-Q device and it has a frequency stability of .15% over a temperature range of -20° to $+80^\circ$C. Because of its high Q, it is a relatively slow starting device and it would interpose a time delay if it were operated during transmission periods only. Instead, the B supply is present at all times and the tone oscillator is kept in constant operation. With this arrangement, the tone modulates the signal as soon as the transmitter is operated.

Only Those Channel Signals Which Contain the Proper Code Tone are Heard in the Private Line Receiver.

The output of V201A is coupled to the grid of V201B. The plate circuit of V201B is fed back to the grid of V201A, through R202 and C201. The operation of this circuit is similar to that of a multivibrator.[1] The vibrasender reed acts as a frequency controlling device in the grid circuit of V201A. The coil energizes the reed, which vibrates at its natural frequency. The vibrating reed induces a voltage in the coil which is connected between grid and ground, and the operating frequency of the oscillator is thus controlled.

Automatic gain control, for a constant output voltage, is obtained from the grid of V201B. The grid-leak voltage developed across R209 is fed to the grid of V201A, limiting the gain and output of the oscillator. Capacitor C206 between the two plates prevents the circuit from oscillating at higher frequencies. The negative feedback resulting from C206 helps produce a nearly sinusoidal output waveform. There is also a low-pass filter (R207, C205) in the output line to the modulator, and this filter has an attenuation characteristic of 6 db per octave.

The two cathodes are connected to ground only when the vibrasender assembly is plugged into its socket. This prevents the oscillator from operating at some random frequency if the vibrasender should be removed. In order to change from one control or coding frequency to another, all that is required is to replace the reed assembly with one having the desired frequency.

If the carrier deviation due to the coding signal should become too great, the higher voltage in the receiver audio circuits will cause

---

[1] See TM 11-672, pages 59-84.

a hum at a harmonic of the frequency of the coding signal. Insufficient deviation, however, may not produce sufficient voltage to operate the Vibrasponder. Optimum operation is obtained when the deviation is between 1 and 2 kc, and the tone oscillator is designed for an output voltage sufficient to produce this deviation. There is no output adjustment by which the serviceman can control the output voltage, but it is held nearly constant by the AGC action already described.

The Private Line receiver circuitry in figure 4 corresponds to the block diagram of the receiver, shown in figure 2. This is only a partial diagram, but the remaining part is the same as any conventional receiver.

The audio input from the discriminator (upper right) goes both to the audio amplifier, V112B, and to the low-pass amplifier, V112A. By means of C153, C155 and C156 between the input and V113A, the voice frequencies are attenuated, only the coding frequencies reaching the vibrasponder driver stage (V113A) with any magnitude. The vibrasponder amplifier is in reality a limiting amplifier, operating at the saturation level for normal coding signals. Thus the drive (for the vibrasponder in the plate circuit) is controlled and remains constant for all normal operating conditions of the equipment. The high Q of the Vibrasponder prevents it from operating for any coding signal other than that of the natural vibrating frequency of the reed. When a signal having the correct frequency is applied, the reed vibrates vigorously, closing the contacts, B-B. This is an intermittent contact, but the filtering network (R148, R147 and C159) applies a nearly constant DC to the grid of the DC amplifier control tube (V113B). This negative voltage comes from the grid of the first limiter stage (not shown in figure 4).

The negative bias at the grid of the DC amplifier is sufficient to prevent that tube from conducting. The squelch is thereby opened and the audio stage may now operate normally. Basically the action is as follows:

The grid of the audio amplifier V112B is at the same DC potential as the plate of the DC control tube 113B. (This is effected by the DC path from the plate to the grid, through the tone filter). When V113B is conducting, its plate potential is low. This leaves the grid of V112B negative with respect to its cathode and cuts off the plate current in this tube. When the grid of V113B is made negative, this tube no longer conducts and its plate potential rises, making the grid of V112B less negative with respect to its cathode. The audio stage (V112B) may now operate normally.

In order to prevent a tone hum in the speaker, it is necessary to prevent the coding tone from reaching the plate circuit of the audio amplifier, V112B. Considerable attenuation of the lower frequencies is provided between the discriminator and the amplifier input, and the tone filter offers negative feedback between the plate and grid of the amplifier. As a result of this arrangement, the over-all amplification of the stage is very low for the frequencies within the coding frequency range, but normal amplification is provided for the voice frequencies. From V112B, the audio is applied to the power amplifier and thence to the speaker.

The cathode of the output stage is grounded in the normal manner for mobile installations but further provision must be made for reduction of hum which may be remaining in the output of the base station receiver. (This hum is too low to be noticed in mobile equipment, but it may be heard under quiet monitoring conditions such as encountered in base station operation.) This is accomplished by making the cathode circuit degenerative at the low audio frequencies -- those below the voice range. To perform this task, a filter having a high impedance at the low frequencies is inserted between cathode and ground to obtain inverse feedback. The output stage thus provides very little amplification for voltages present at the coding frequency range, but operates in the normal manner for voice frequencies.

The Private Line receiver may be operated as Private Line radio equipment by grounding the cathode of the DC control tube. This is facilitated by a switch which is mounted on the control-head (not shown in figure 4). If the cathode is opened at the switch, the squelch circuit is disabled and it cannot quiet the receiver. With his speaker on constantly, the operator may monitor all signals within the channel, or as a quick check of his receiver's operation. When no carrier is present, there is no squelch to provide receiver silencing, and the characteristic hiss, or FM receiver noise will be heard.

The Private Line radio squelch remains open as long as the correct carrier is being received, because the latter is modulated continuously by the tone oscillator at the transmitter. Other carriers (not having the correct coding signal) will not operate the squelch, and the receiver remains silenced.

Squelch Tail

When a transmission is completed and there is no longer any carrier present to provide quieting, the squelch might be expected to close, silencing the receiver. It is true that as soon as the squelch circuit goes into operation the receiver is silenced, but in actual practice the time constants of the squelch circuitry will keep the audio section of the receiver open for a short period of time after the carrier is removed. In the absence of a carrier to provide quieting and with the squelch still open, the typical FM noise reaches the speaker. This short burst of noise which is heard in the speaker as the carrier is removed is known as "squelch tail" and it is a common characteristic of communications receivers which are equipped with carrier operated squelch circuits.

at the transmitter a short time before the carrier is discontinued. During the period that the squelch requires to close, the carrier is present to provide quieting. By the time the carrier goes off the air, the receiver is already silenced by the squelch. Squelch tail is thus eliminated by controlling the transmitted signal rather than by any circuitry within the receiver. The operation can be seen by studying figure 5.

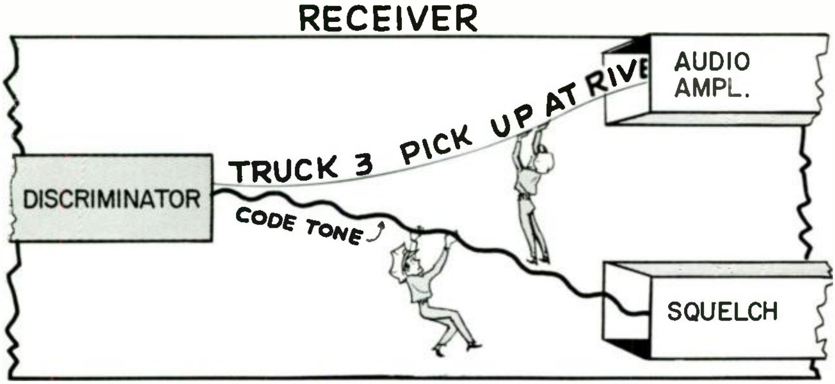

Inside the Receiver the Code Tone is Separated from the Message and Applied to the Squelch Circuit. The Correct Code Tone Causes the Squelch to Open, and the Message Reaches the Speaker.

Squelch tail can be a real source of annoyance in Private Line receivers, where the vibrating reed of the Vibrasponder due to its high "Q" tends to keep the squelch open for a still longer period of time. Special circuitry incorporated in Motorola Private Line radio equipment eliminates this squelch tail.

Squelch Tail Elimination

One simple way to eliminate squelch tail in Private Line radio is to remove the tone modulation

Figure 5 shows the control circuits of the entire equipment, with the control relays in the transmit position. The two squelch-tail controlling relays (K2 and K3) on the squelch-tail eliminator chassis (which is located on the power supply chassis) are energized whenever a ground is supplied at the "B" contact of K3. This connection is made at terminal 16 of TB2. The line may be grounded (1) by the push-to-talk switch on the microphone, or (2) by energizing the transmit-receive relay (K1) on the remote control chassis. Grounding this line completes the path through both relay coils and through the time delay network to a source of continuous B+ voltage (the receiver plate supply). With both relays now energized, they perform the following functions:

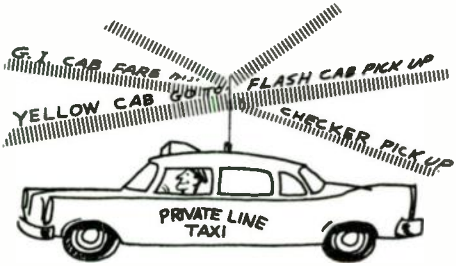

The Many Nuisance Messages of Other Systems on the Same Channel are Not Heard in the Private Line Receiver.

Contacts 3 and 4 of relay K3 open, ungrounding the output from the tone oscillator. (While the tone oscillator, which is located on the transmitter chassis, is in continuous operation, its output is grounded whenever relay K3 is de-energized and the tone cannot reach the phase modulator of the transmitter.) With K3 now energized, the tone oscillator output is present at the phase modulator. Relay K2 is also energized, grounding contact 1 through contact 2. This energizes the transmit-receive relay, K1 placing the transmitter in operation. The transmitter is now "on the air" and ready for voice modulation. The carrier is continually modulated with the coding tone, and the receiver squelch has been opened by this tone. We are now ready to see what happens when the operator releases his push-to-talk switch.

As soon as the operator is through with his message he releases the talk switch, breaking the ground connection to relays K2 and K3. Relay K3 releases immediately and the tone output from the tone oscillator is grounded. With the coding tone no longer present at the receiver, the squelch starts to close. This is not an instantaneous action as we have already explained, but there is no squelch tail heard at the receiver, because the carrier is still being received.

Although relay K2 is in series with K3, it does not release at the same time. During the time that K1 of the Remote Control chassis was energized, capacitor C2 was charged, to the voltage across K2. It now starts to discharge through the time-delay network and through the coil of relay K2. The time constant of this circuit will cause relay K2 to stay energized longer than K3. The time delay network will, when adjusted for the proper delay time, hold the relay closed until the squelch in the receiver has had time to operate.

Relay K2 now opens and the ground is removed from the coil of K1. This relay (K1) now releases and shuts off the transmitter (removes the carrier). By this time, however, the receiver squelch has closed and no noise (squelch tail) is heard in the speaker.

Before leaving figure 5 there are several other circuits shown on this schematic which warrant inspection, since they affect the squelch-tail operation of the equipment. When relay K2 releases, contacts 3 and 4 are closed, placing capacitor C2 in parallel with one of the 33K resistors. These resistors are connected as a voltage divider across the receiver B+ supply and a constant voltage is applied to them. The capacitor is thus charged at the time it is placed across the coil of K2. Whenever the operator momentarily presses his push-to-talk switch, and releases it, the capacitor will hold K2 closed, preventing a squelch tail at the receiver. Without such an arrangement, this quick on-and-off action might fail to provide the necessary charge for the capacitor and relay K2 (and K1) would make and break immediately, resulting in a squelch tail at the speaker.

The "Tone oscillator B+ stabilizing network" compensates for B supply voltage changes which occur when the equipment is switched from receive to transmit, and vice versa. During transmission periods, the load on the receiver power supply is greatly reduced and the voltage supply to the tone oscillator increases. However, with contacts 4 and 5 of relay K1 open, a voltage drop is provided by the 6.8K resistor in the supply line to the tone oscillator; this voltage drop is further increased by the 56K resistor which is placed parallel to the line. During receiving periods, the B supply voltage decreases, but the voltage at the tone oscillator remains nearly constant. When it releases, the relay "makes" contacts 4 and 5, placing the two resistors in parallel with each other and in series with the tone oscillator supply line. This means less resistance and less voltage drop across the resistors, which in turn means a steady voltage applied to the oscillator, and the operation is stabilized. Any sharp change in supply voltage would produce undesirable transients in the tone oscillator and impair operation of the equipment.

The squelch tail eliminator shown in figure 5 still has one significant shortcoming--it takes too long for the transmit-receive relay to place the receiver back in operation after the operator has released the "talk" button. Let us suppose that the operator of station number 1 has been talking to station 2. As soon as the message is completed, the operator at station 2 pushes his talk button. The equipment, however, due to the delay circuitry, has not yet returned to the receive position, and operator No. 1 does not hear the beginning of the other operator's reply. It thus becomes desirable to shorten the time it takes a station to return to receive operation, at the same time providing positive squelch-tail elimination at the receiver. This "fast acting" feature is accomplished by means of the circuitry shown in figure 6.

Fast-Acting Squelch Tail Eliminator

The Motorola squelch-tail eliminator shown in figure 6 is fast acting, allowing almost instantaneous call-back from one station to another.

This arrangement provides quick squelch action at the receiver, which allows a quicker release of the transmit-receive relay at the transmitter. By bringing the Vibrasponder to a quick stop, the receiver squelch circuit will close in a shorter period of time. To accomplish this, a tone signal of the same frequency but of an opposing phase is sent out on the carrier and this signal tends to make the reed vibrate in the opposite direction, thereby damping its action. When the reed is sufficiently damped to prevent its contacts from completing the circuit, the carrier can be removed at the transmitter.

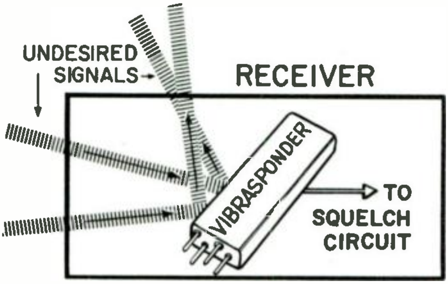

At the Private Line Receiver, Undesired Signals Cannot Operate the Vibrasponder and Cause the Squelch to Open.

The transmitter in figure 6 is turned on whenever squelch-tail relay K2 is energized. Relay K2 has two sets of contacts (both sets shown in the released or receive position in figure 6). When K2 is energized (1) one set of contacts (4 and 5) closes the circuit to the slow-release relay K3, which in turn energizes the transmit relay K1; (2) the other set of contacts switches the tone oscillator line from the pentode section to the triode section. The transmitter is now operating, with the tone modulation taken from the triode section of the tone oscillator.

When the operator releases his push-to-talk button, squelch-tail eliminator relay K2 opens. The circuit through the coil of the slow-release relay, K3, is also opened, but the relay contacts remain closed for 120 milliseconds, during which time the transmitter remains on the air.

With the release of relay K2, the tone modulation of the carrier was switched from the triode section of the oscillator to the pentode section by the second pair of K2 contacts. The opposite phase of the tone signal from the pentode section now opposes the vibration of the reed in the vibrasponder circuit of the receiver, causing a sharp damping of its movement. The reed contacts no longer complete the vibrasponder circuit and the receiver squelch closes. By this time the slow release K3 has dropped out, releasing the transmit-receive relay and switching the system to receive. This phase change of the tone modulation quickly damps the vibrasponder reed in the receiver, thus making it possible to use a short delay time when releasing the transmit-receive relay.

In the Private Line receiver circuit of figure 4, high noise levels could cause the squelch to open under adverse conditions. A slightly different arrangement, figure 7, is possible in the driving circuit for the vibrasponder; two coupling circuits have been provided from the discriminator to the low-pass amplifier.

The coupling circuit through R1 and C1 allows the lower audio frequencies to pass, but provides high attenuation to the upper voice and higher frequencies. The more direct capacitance coupling (C2) to the grid of the amplifier introduces a certain amount of high-frequency noise energy, present at the discriminator output without a signal. Both the low-frequency noise energy and the high-frequency signal are amplified in this stage, both reaching the input of the following stage, a cathode-follower type of vibrasponder driver.

This stage is a clipper-limiter, and nearly all input signals drive the stage to plate current cutoff and saturation. Thus there is a maximum amount of signal (noise) power in the output at all times, and this does not vary. With both high and low frequency noise applied, the output is divided between the high and low frequency noise. There is not enough low-frequency energy to fully drive the reed and open the squelch.

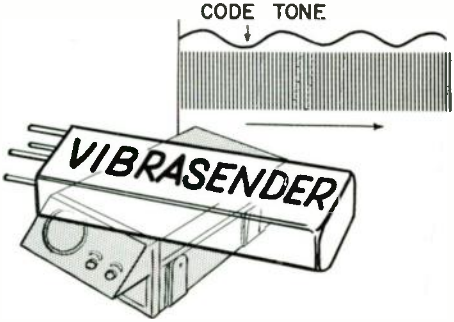

The Vibrasender Insures that the Correct Coding Tone Modulates the Transmitter and Reaches the Receiver.

As soon as a carrier enters the receiver, however, the noise quieting effect of the IF limiters reduces the high-frequency noise at the discriminator output. The only signal reaching the low-pass amplifier, then, is the tone signal. All the output power of the vibrasponder driver stage is now concentrated at the tone frequency, the reed is energized, and the squelch opens.

There is another feature of this circuit (figure 7) which makes it immune to noise. By placing the vibrasponder coil in parallel with a low impedance, the coil damps the reed and undesirable noise energy cannot open the squelch. Consider for a moment the action if a high impedance instead of a low resistance were in parallel with the coil.

Noise energy reaching the coil sets the reed in motion, only to have successive noise pulses cause damping currents in the coil. The net result? The squelch remains closed. Strong, low-frequency noise pulses, however, occasionally drive the stage to cutoff and, due to the time period of this low-frequency pulse, the stage is held at cutoff for some time.

The reed has already been driven by the strong pulse and is now free to vibrate without interruption; the tube is at cutoff and noise energy at the grid does not reach the cathode. The reed continues to vibrate and opens the squelch. The one damping effect upon the reed is the current through the coil, and this depends upon the Q of the coil. The high resistance in parallel with the coil allows a high Q and there is but little damping.

Now let's see what happens when the vibrasponder coil is in parallel with a low resistance, as in figure 7. Again the strong, low-frequency pulses bias the tube to cutoff and drive the reed. The Q of the circuit now depends on the low resistance of the cathode resistor, and the effective Q is considerably lower.

As a result, the coil currents decay quickly and the reed is damped, before the squelch has had time to open.

This arrangement, being relatively free from the triggering effects of noise pulses, will not open the squelch unless the correct tone is applied.

Private Line Systems

Various types of Private Line radio operation will be found in use. One system employs Private Line radio operation only from the control dispatcher at the base station to the mobile units. With this system the mobiles hear only those calls originating at the base; there is no mobile-to-mobile communication so long as the mobile receivers are in Private Line radio position. If the switches at the mobile units are placed in the "Private Line OFF" position, however, the operators can hear all the transmissions on their frequency.

Another type of Private Line radio operation has coding tones

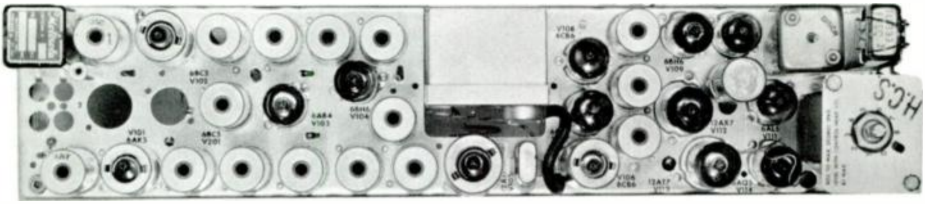

The Vibrasponder is Seen at the Upper Right Corner of this Private Line Receiver.

at all units, giving the entire system freedom from all signals except those of its own net. By means of a switch, any operator may disable his squelch and listen to all messages on the channel. There is no squelch system to silence the receiver between messages, however, and there is considerable FM noise in the speaker.

Squelch-tail elimination may or may not be used; it depends upon the particular needs of each system. The squelch-tail eliminator circuit is often incorporated in the base transmitter only, so that the mobile receivers do not hear the squelch-tail noise. Without the squelch-tail eliminator included in the mobile transmitters, the base receiver is subject to squelch tail.

Disabling The Private Line Squelch

Let us return briefly to figure 5, which shows a Private Line base station designed to operate on the 450-mc band. It is sometimes desirable for the operator to disable his squelch circuit to monitor the band or to check on the operation of his receiver. This operation can be performed by closing a switch on the remote console. The resulting current in the control line produces a voltage drop across relay K1 (shown in the remote control chassis). This current is not sufficient to operate the relay, but the voltage drop across the relay coil, when applied to the cathode of the squelch control tube in the receiver, stops that tube from conducting and, in turn, opens the squelch.

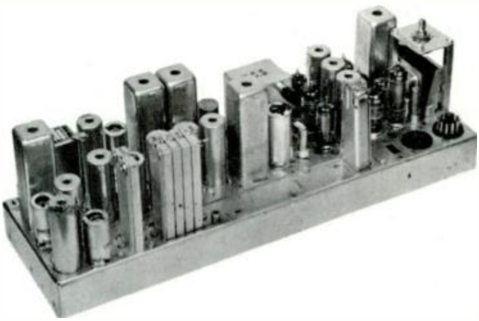

The Vibrasponder is Seen at the Right Front Section of this 450-MC Receiver.

This circuit enables the operator to disable the receiver squelch from his remote control console. The Private Line radio disabling system of figure 5 has one side of the control line grounded. This unbalance in the line can be a source of hum. An alternate circuit for disabling the base station Private Line squelch is shown (the dotted lines) immediately below the remote control chassis.

A second relay (K4) is connected in series with control relay K1. (Jumper JU3 is removed.) In parallel with K4, we find a diode rectifier. This rectifier acts like a bypass to K4 for the DC current (approximately 10 ma) which operates K1.

When the operator at the remote console closes his Private Line switch, a DC current is again established in the control line, but it is in the opposite direction. This current, only 4 ma, cannot operate relay K1; it must pass through the coil of relay K2, however, for the crystal offers a high impedance to current in this direction. The relay now closes, and disables the squelch control tube by opening its cathode circuit.

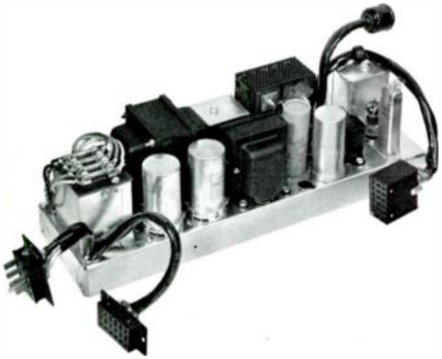

The Vibrasender and Oscillator, Which Controls the Tone Modulation of the Transmitter, is Usually Located on the Power Supply Chassis.

The ground can be removed from one side of the control line in this alternate circuit, and the line may now be balanced for minimum hum pickup. The operator may then monitor the channel for a period of time, but in the absence of transmissions or signals from other transmitters, the receiver becomes very noisy. It is evident that a system incorporating both Private Line radio squelch and normal squelch (carrier squelch) would be desirable. This combination is used in the Motorola "dual squelch" Private Line system.

Dual Squelch

The simplified circuit of figure 8 shows the squelch section of a Private Line receiver which incorporates both a tone-operated squelch and a carrier-operated squelch. A switch on the operator's control head enables selection of either private line squelch operation or normal squelch operation. With the switch in the PRIVATE LINE position, the carrier squelch section is disabled; the only operative squelch circuit now is the Private Line tone circuit, and only these signals having the proper coding tone will be heard. With the switch in the off position, however, all transmissions on the channel will be heard; the carrier-operated squelch, now active, silences the receiver between transmissions.

The operation of the circuit with the operator's switch in the PRIVATE LINE position is the same as if the carrier circuitry were not included. The cathode of the Private Line DC amplifier is grounded, making the Private Line squelch independent of the carrier squelch section. The Private Line DC amplifier tube will be conductive or nonconductive, depending upon the bias on its grid. This, in turn, is determined by the activity of the vibrasponder reed. If the coding tone is not applied, the reed does not vibrate and, because there is no large negative bias applied to the grid, the DC control tube conducts, thereby squelching the receiver.

When the correct tone is received, the reed vibrates and applies the -17 volt bias from the limited grid to the grid circuit of the control tube. This biases the control tube beyond cutoff, making it nonconductive and opening the squelch.

When the PRIVATE LINE switch is placed in the "off" position, the Private Line DC amplifier and the carrier squelch DC amplifier are placed in series as far as their plate currents are concerned. If either of these tubes should now become nonconductive the receiver squelch will open.

The operation of the carrier squelch section is the same as that of the noise-compensated squelch circuit previously explained. Noise from the discriminator, in the absence of a carrier, is applied to the noise amplifier. The amplifier output is then rectified by the noise rectifier and this positive DC voltage is applied to the grid of the DC control tube. This positive voltage opposes the negative voltage from the grid of the limiter, and the bias on the DC amplifier stage approaches zero, allowing the DC amplifier tube to conduct. The Private Line DC amplifier of figure 8 is also conductive in the absence of the Private Line tone and the audio tube is biased beyond cutoff. The receiver is squelched.

As soon as a carrier is received, the action of the limiters reduces the noise input to the noise amplifier and the positive output voltage from the noise rectifier is also greatly reduced, perhaps to zero. As a result, the limiter grid voltage makes the grid of the carrier squelch DC amplifier, highly negative and the tube is at cutoff. With the carrier DC amplifier at cutoff there can be no current through the private line DC amplifier, and the squelch is open. Any signals coming into the receiver will now be heard. So long as the carrier is being received, the carrier squelch DC amplifier is at cutoff and keeps the squelch open.

The operator of dual-squelch equipment may listen either (1) to signals of his own system, or (2) to any signals on the channel. (This is made possible by the PRIVATE LINE switch.) In either instance, one of the squelch circuits is effective, silencing the receiver between transmissions.

STUDENT NOTES

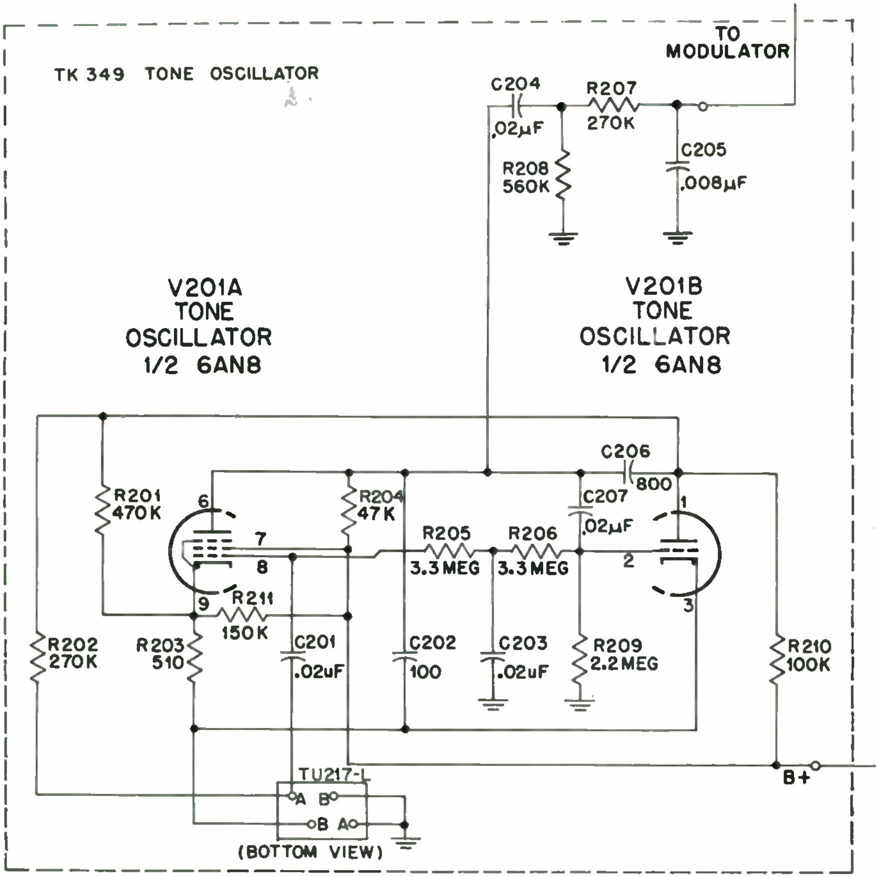
TK 349 TONE OSCILLATOR
TO MODULATOR
C204
.02µF
R207
270K
R208
560K
C205
.008µF
V201A
TONE
OSCILLATOR
1/2 6AN8
V201B
TONE
OSCILLATOR
1/2 6AN8
C206
800
R201
470K
R204
47K
C207
.02µF
6
7
8
9
1
2
3
R205
3.3MEG
R206
3.3MEG
R211
150K
R202
270K
R203
510
C201
.02uF
C202
100
C203
.02uF
R209
2.2MEG
R210
100K
TU217-L
A B
B A
(BOTTOM VIEW)
B+

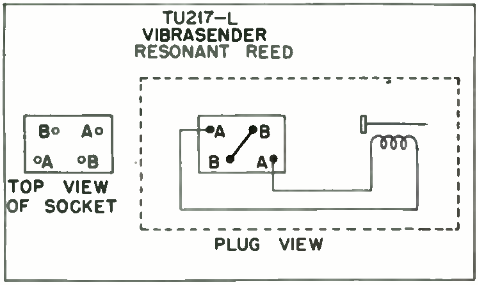
TU217-L
VIBRASENDER
RESONANT REED
B A
A B
TOP VIEW
OF SOCKET
A B
B A
PLUG VIEW

FIGURE 3

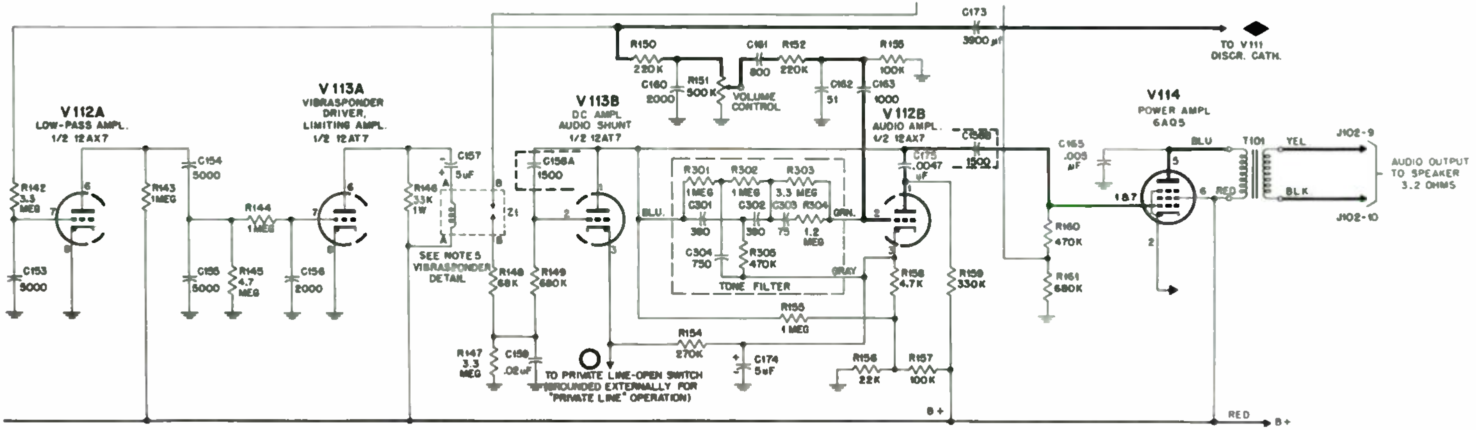

V112A
LOW-PASS AMPL.
1/2 12AX7
R142 3.3 MEG
C153 5000
R143 1MEG
C154 5000
C155 5000
R144 1MEG
R145 4.7 MEG
C156 2000
V 113A
VIBRASPONDER DRIVER, LIMITING AMPL.
1/2 12AT7
R146 33K 1W
C157 5uF
Z1
SEE NOTE 5 VIBRASPONDER DETAIL
R148 68K
R149 680K
R147 3.3 MEG
C159 .02uF
C158A 1500
V 113B
DC AMPL
AUDIO SHUNT
1/2 12AT7
TO PRIVATE LINE-OPEN SWITCH (GROUNDED EXTERNALLY FOR "PRIVATE LINE" OPERATION)
R150 220K
C160 2000
R151 500K
VOLUME CONTROL
C161 800
R152 220K
C162 51
C163 1000
R155 100K
C173 3900 µf
TO V111 DISCR. CATH.
BLU.
R301 1MEG
R302 1MEG
R303 3.3 MEG
C301 390
C302 390
C303 75
R304 1.2 MEG
C304 750
R305 470K
GRN.
GRAY
TONE FILTER
R155 1 MEG
R154 270K
C174 5uF
R156 22K
R157 100K
R158 4.7K
R159 330K
B+
V 112B
AUDIO AMPL.
1/2 12AX7
C175 .0047 µF
C158B 1500
C165 .005 µF
R160 470K
R161 680K
V114
POWER AMPL
6AQ5
1&7
BLU
RED
T101
YEL
BLK
J102-9
J102-10
AUDIO OUTPUT TO SPEAKER 3.2 OHMS
RED
B+

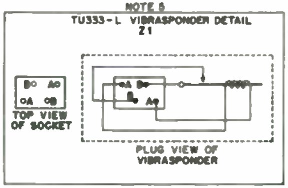

NOTE 5
TU333-L VIBRASPONDER DETAIL
Z1
B A
A B
TOP VIEW OF SOCKET
A B
B A
PLUG VIEW OF VIBRASPONDER

FIGURE 4

STUDENT NOTES

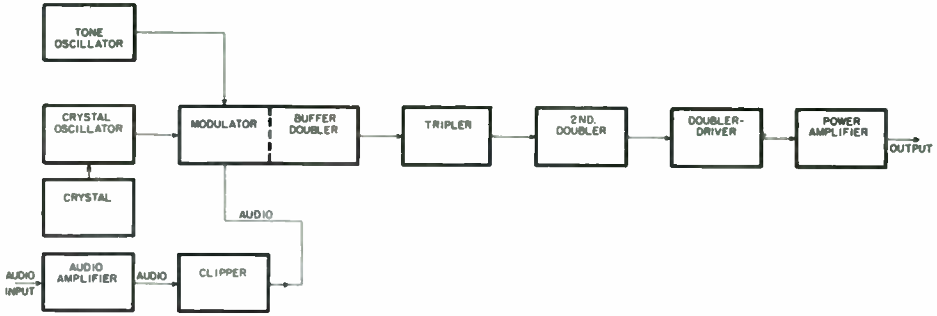

HIGH-BAND "PRIVATE LINE" TRANSMITTER
FIGURE 1

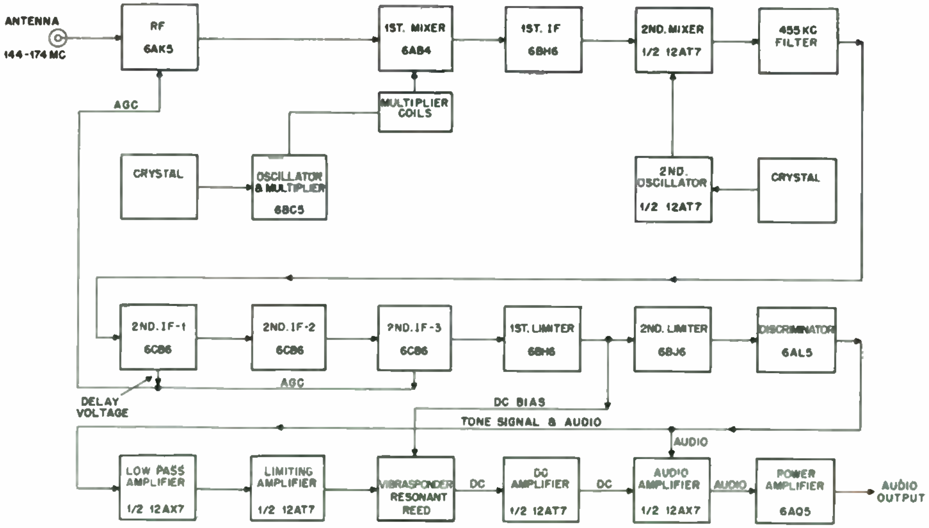

HIGH-BAND "PRIVATE LINE" RECEIVER
FIGURE 2

STUDENT NOTES

STUDENT NOTES

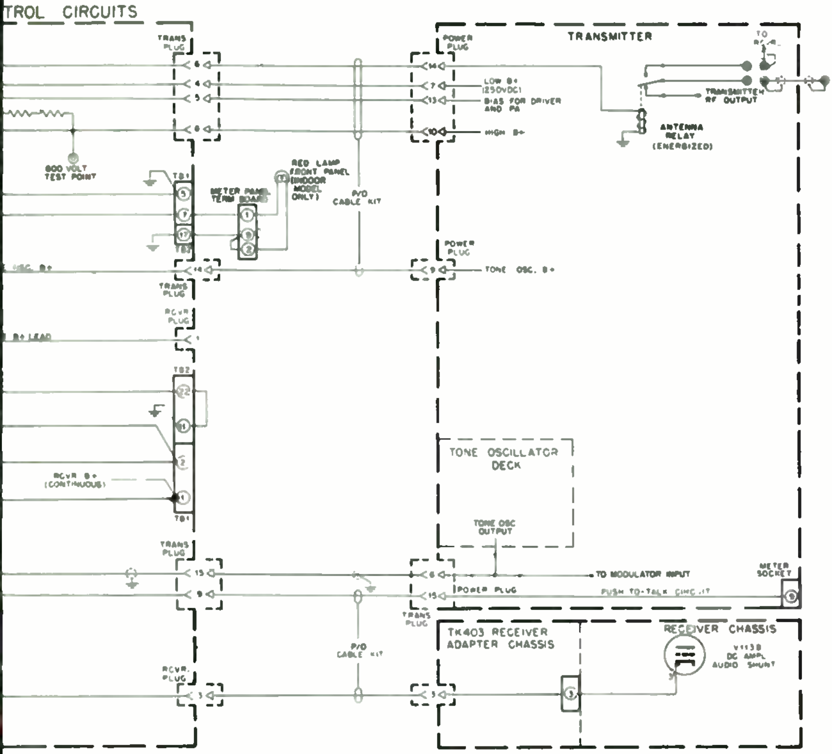
TROL CIRCUITS
TRANS PLUG
800 VOLT TEST POINT
TB1
METER PANEL TERM BOARD
RED LAMP FRONT PANEL (INDOOR MODEL ONLY)
P/O CABLE KIT
TB2
OSC. B+
TRANS PLUG
RCVR PLUG
B+ LEAD
TB2
RCVR B+ (CONTINUOUS)
TB1
TRANS PLUG
P/O CABLE KIT
RCVR. PLUG
TRANSMITTER
POWER PLUG
LOW B+ (250VDC)
BIAS FOR DRIVER AND PA
HIGH B+
TO RCVR
TRANSMITTER RF OUTPUT
ANTENNA RELAY (ENERGIZED)
POWER PLUG
TONE OSC. B+
TONE OSCILLATOR DECK
TONE OSC OUTPUT
TO MODULATOR INPUT
POWER PLUG
PUSH TO-TALK CIRCUIT
METER SOCKET
TRANS PLUG
TK403 RECEIVER ADAPTER CHASSIS
RECEIVER CHASSIS
V113B DC AMPL AUDIO SHUNT

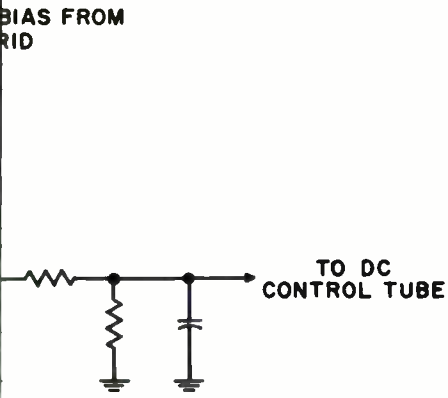
BIAS FROM
RID
TO DC
CONTROL TUBE

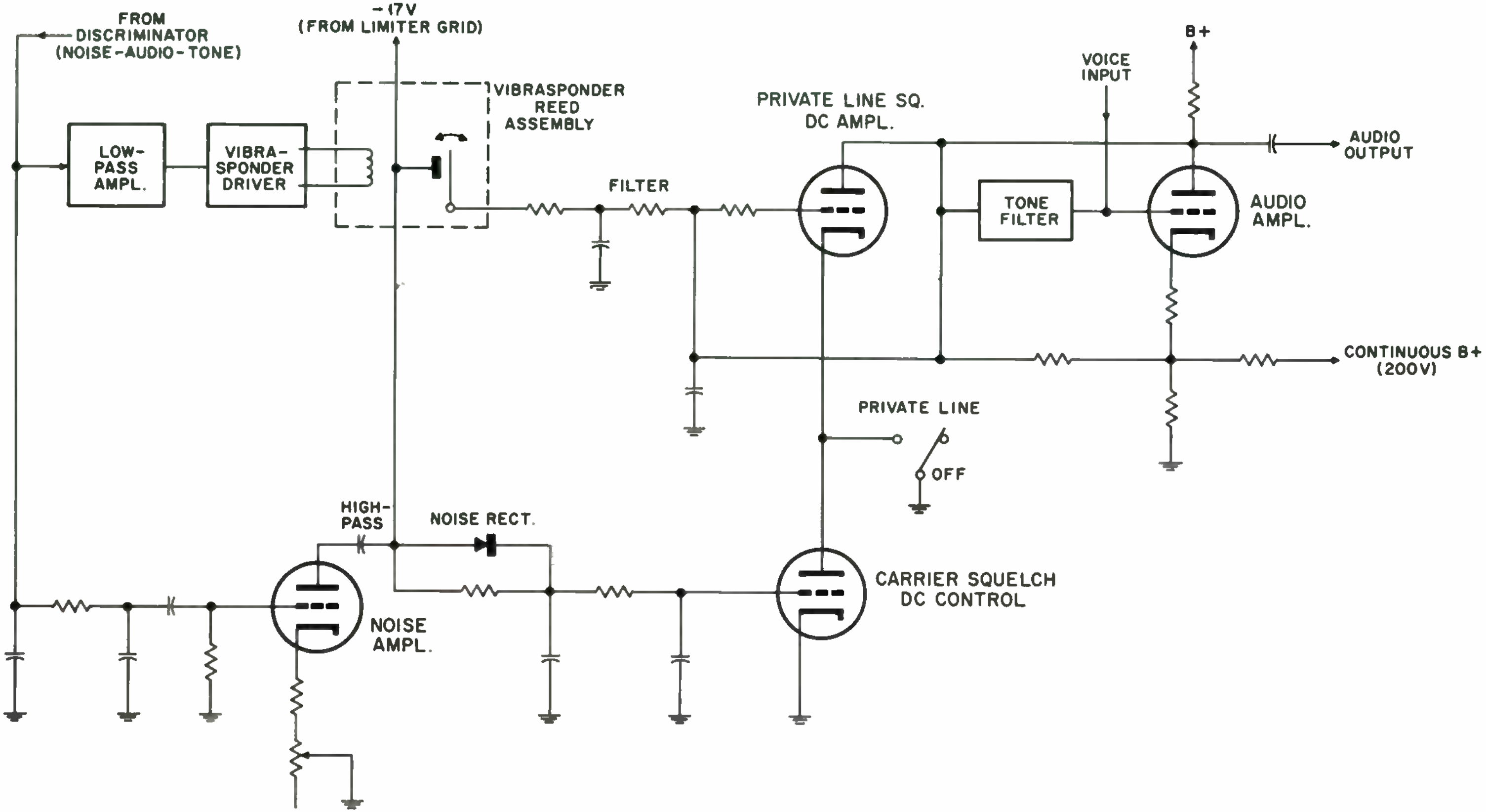

DUAL SQUELCH
FIGURE 8

PUSH-TO-TALK AND

CONDITIONS

1. 117 VOLT, 60CPS AC LINE CONNECTED TO FUSE BLOCK.
2. CONTROL LINE CONNECTED TO TERMS 7 & 8, BOTTOM ROW REMOTE CONTROL CHASSIS.
3. PUSH-TO-TALK BUTTON DEPRESSED (AT REMOTE CONTROL CONSOLE)

RESULTS

1. REMOTE CONTROL CHASSIS TRANSMIT-RECEIVE RELAY ENERGIZED.
2. SQUELCH TAIL ELIMINATOR RELAYS ENERGIZED.
3. POWER SUPPLY TRANSMIT-RECEIVE RELAY ENERGIZED.
4. RED LIGHT ON CABINET ENERGIZED. (INDOOR MODEL ONLY).
5. HIGH B+ APPLIED TO FINAL RF AMPLIFIER.
6. ANTENNA RELAY ENERGIZED.
7. TONE-MODULATED CARRIER ON AIR.

RELEASE OF PUSH-TO-TALK BUTTON

1. SQUELCH TAIL ELIMINATOR RELAY K3 DE-ENERGIZES. GROUNDING TONE OUTPUT IMMEDIATELY.
2. CAPACITOR C2 DISCHARGES THROUGH RELAY K2 AND DELAY ADJUSTMENT NETWORK.
3. K2 REMAINS ENERGIZED FOR THE TIME CONSTANT PERIOD.
4. TRANSMIT-RECEIVE RELAY K1 REMAINS ENERGIZED FOR THE TIME CONSTANT PERIOD.
5. UNMODULATED CARRIER REMAINS ON THE AIR FOR THE TIME CONSTANT PERIOD.

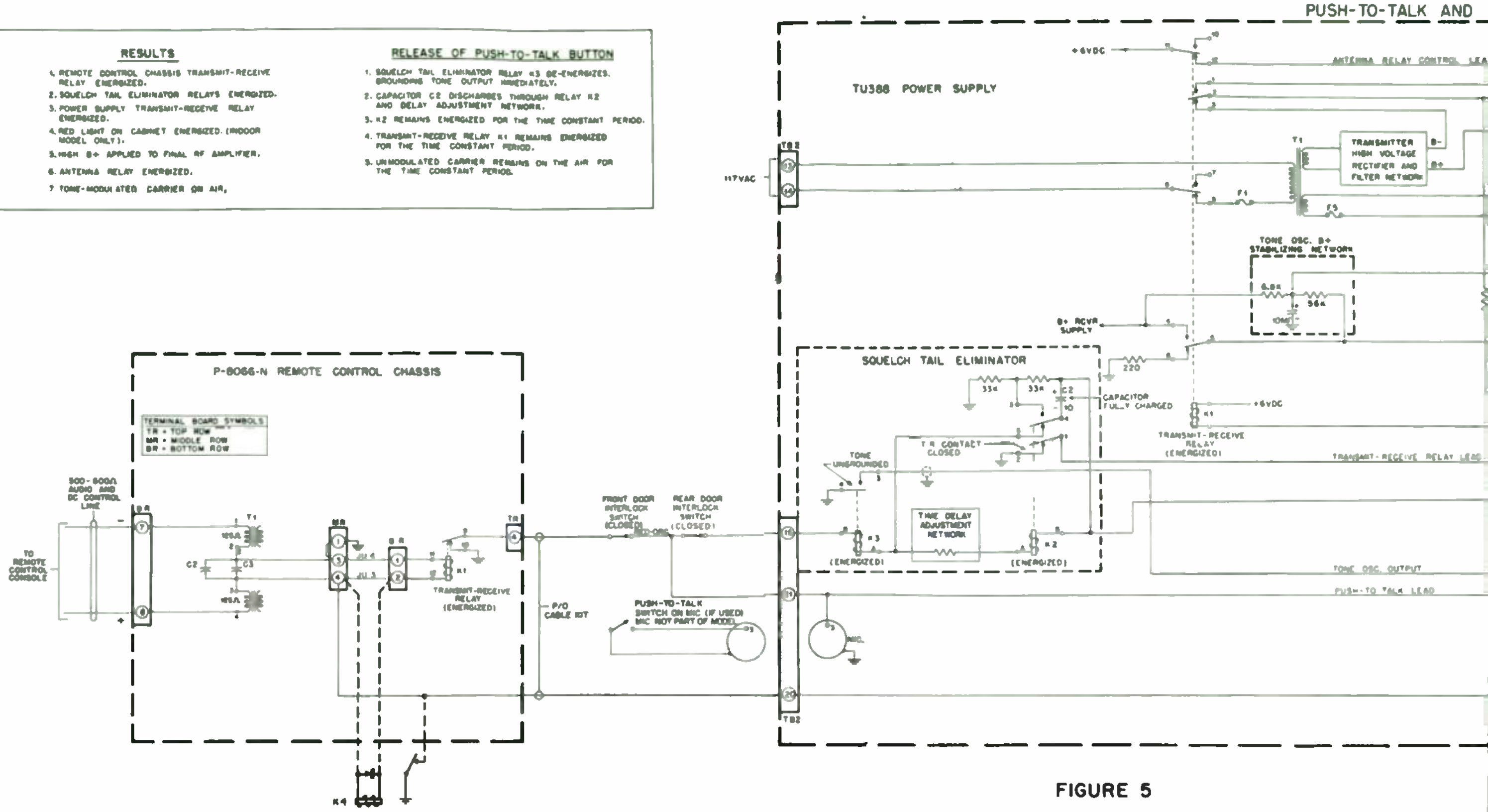

FIGURE 5

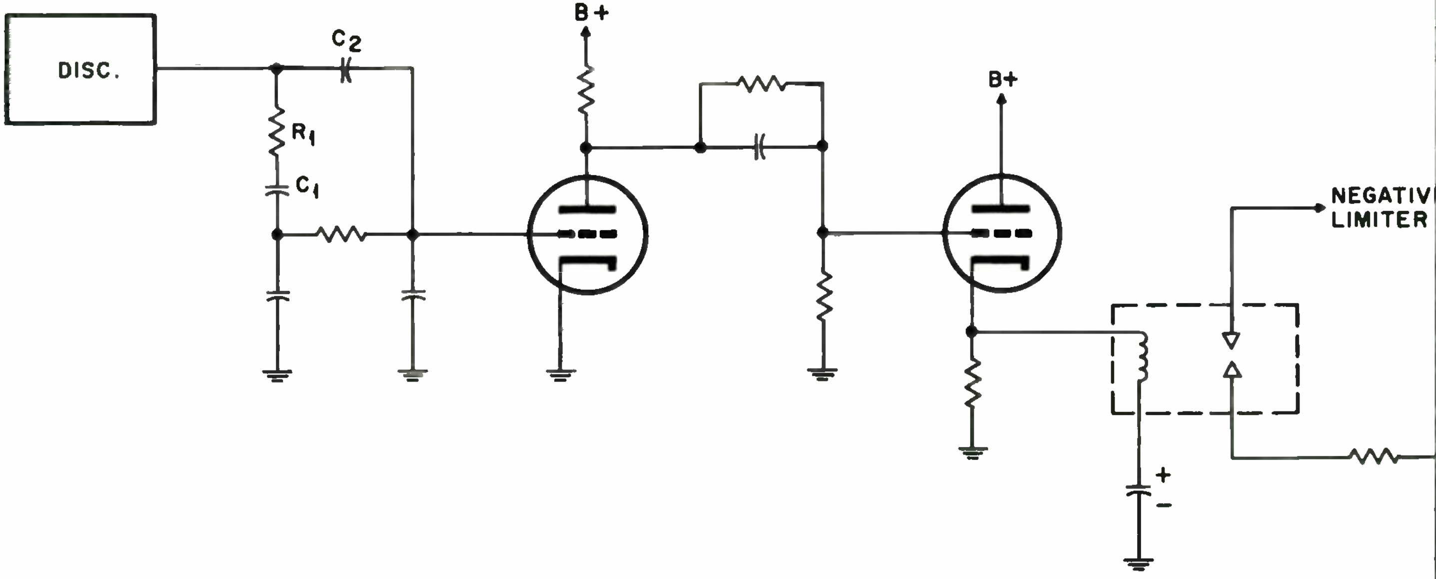

FIGURE 7

STUDENT NOTES

STUDENT NOTES

FAST-ACTING SQUELCH CONTROL CIRCUIT DIAGRAM

SEQUENCE OF OPERATIONS

CONDITIONS

1. LINE CORD PLUGGED INTO AC OUTLET.
2. AC ON-OFF SWITCH ON.
   NOTE:
   SEE AC CIRCUIT DIAGRAM FOR PRIMARY AC CIRCUIT DETAILS.
3. MICROPHONE PUSH-TO-TALK BUTTON DEPRESSED OR TRANSMIT SWITCH CLOSED.

RESULTS

1. SQUELCH TAIL ELIMINATOR RELAY K2 IS ENERGIZED.
2. CONTACTS OF K2 OPERATE SLOW RELEASE RELAY K3.
3. CONTACTS OF K3 OPERATE TRANSMIT-RECEIVE RELAY K1.
4. CONTACTS OF K1 OPERATE ANTENNA RELAY.
5. CONTACTS OF K1 APPLY 117VAC TO TRANSMITTER HIGH VOLTAGE POWER SUPPLY.
6. CONTACTS OF K2 CONNECT TRIODE TONE OSCILLATOR OUTPUT TO TRANSMITTER MODULATOR.
7. TONE-MODULATED CARRIER GOES ON THE AIR.
8. RED LIGHT ON FRONT PANEL GOES ON.

RELEASE OF PUSH-TO-TALK BUTTON

1. SQUELCH TAIL ELIMINATOR RELAY K2 CONTACTS OPEN IMMEDIATELY.
2. CONTACTS OF K2 TRANSFER MODULATOR TONE INPUT FROM TRIODE SECTION TO PENTODE SECTION OF TONE OSCILLATOR.
3. PHASE-SHIFTED PENTODE OUTPUT DAMPS VIBRATIONS OF RESONANT REED AT RECEIVER.
4. AFTER 120 MILLISECONDS SLOW RELEASE RELAY BREAKS TRANSMIT-RECEIVE RELAY CIRCUIT, TAKING CARRIER OFF THE AIR.
5. RED LIGHT GOES OUT. ANTENNA RELAY TRANSFERS ANTENNA TO RECEIVER.

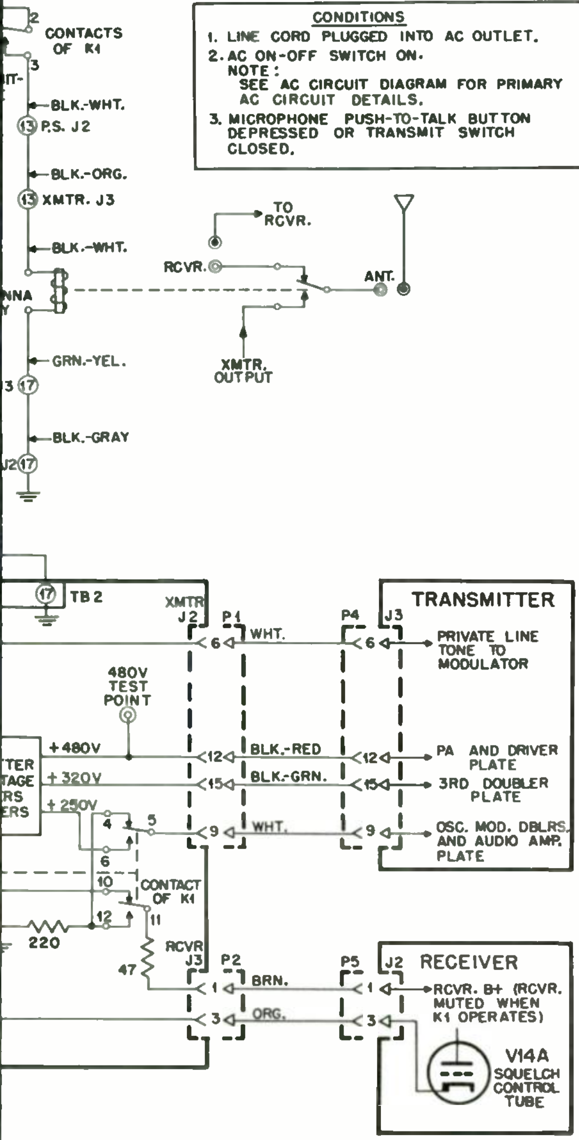

STUDENT NOTES

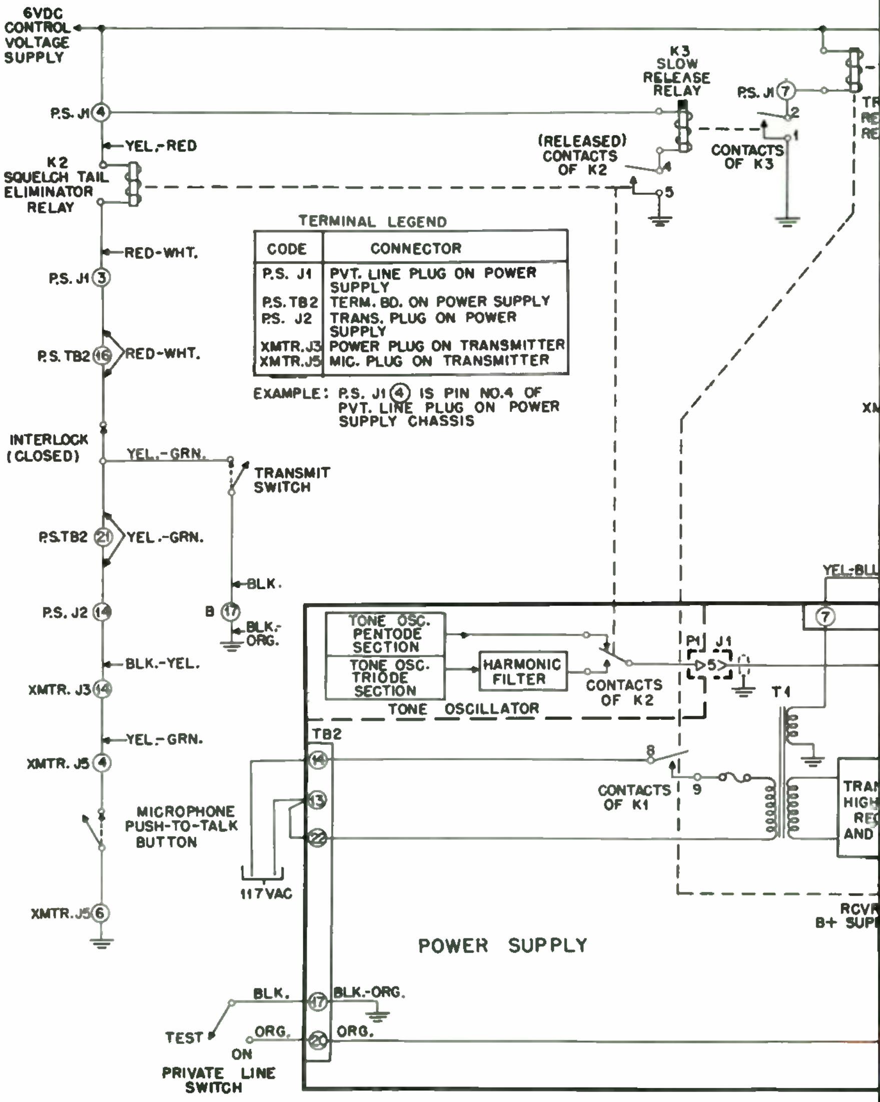

TERMINAL LEGEND

CODE	CONNECTOR
P.S. J1	PVT. LINE PLUG ON POWER SUPPLY
P.S. TB2	TERM. BD. ON POWER SUPPLY
P.S. J2	TRANS. PLUG ON POWER SUPPLY
XMTR. J3	POWER PLUG ON TRANSMITTER
XMTR. J5	MIC. PLUG ON TRANSMITTER

EXAMPLE: P.S. J1 ④ IS PIN NO.4 OF PVT. LINE PLUG ON POWER SUPPLY CHASSIS

FIGURE 6

Motorola Training Institute

4501 West Augusta Blvd., Chicago 51, Ill.

Please PRINT or use STAMP

Name ______________________ Student No. ______

Street ________________ Zone ____ Date ______

City ______________ State ________ Grade ______

EXAMINATION LESSON MA-1

1. The purpose of Motorola Private Line equipment is to allow operation of more than one system on the same channel with each system receiving its own signals and not those of other systems.
TRUE ________ FALSE ________

2. The Private Line transmitter sends out a coding tone (at the beginning of a transmission)(continuously)(at the beginning and the end of the transmission) in order to (let the operator at the receiver know this message is for him)(close the squelch circuits of all the other receivers)(open the squelch of the desired receivers).

3. The tone oscillator at the base station of a Private Line system becomes inoperative. Can the base station operator talk to any Private Line receivers?
YES ________ NO ________

4. A Private Line receiver with Private Line squelch only, has its PL switch OFF.

   Will the operator hear all messages on the channel? YES ________ NO ________
   Will there be any noise between messages? YES ________ NO ________

5. Because of the low-frequency of the Private Line tones, the audio section of the receiver must be designed to pass these low-frequency signals.
TRUE ________ FALSE ________

6. The tone amplifier of a Private Line receiver (without dual squelch) must pass:

   A. The entire discriminator output. ________
   B. Only the voice frequencies, plus some high-frequency noise. ________
   C. The frequencies of the Private Line tones. ________
   D. All frequencies above 3 kc. ________

7. Squelch tail is the result of the continued vibration of the vibrasponder reed for a short time after the transmission is completed. This action holds open the squelch circuit for a short period after the carrier is removed. During this time, the characteristic noise of the FM receiver is heard in the speaker.
TRUE ________ FALSE ________

8. The prevention of squelch tail is basically a function of the transmitter circuits.
TRUE ________ FALSE ________

9. Referring to figure 8 of the lesson, assume that the noise amplifier in the carrier squelch section develops an open filament. With the PL switch off, the squelch will be (always open)(always closed)(will operate normally). With the PL switch closed, the squelch will (be closed)(remain open)(operate normally).

10. Conventional type receivers operating on the same channel as a private line system will hear a constant low-frequency tone during all transmissions of the private line equipment.
TRUE ________ FALSE ________


national
MOTOROLA
RADIO COMMUNICATIONS
service

A TWO-WAY RADIO COMMUNICATIONS TRAINING PROGRAM

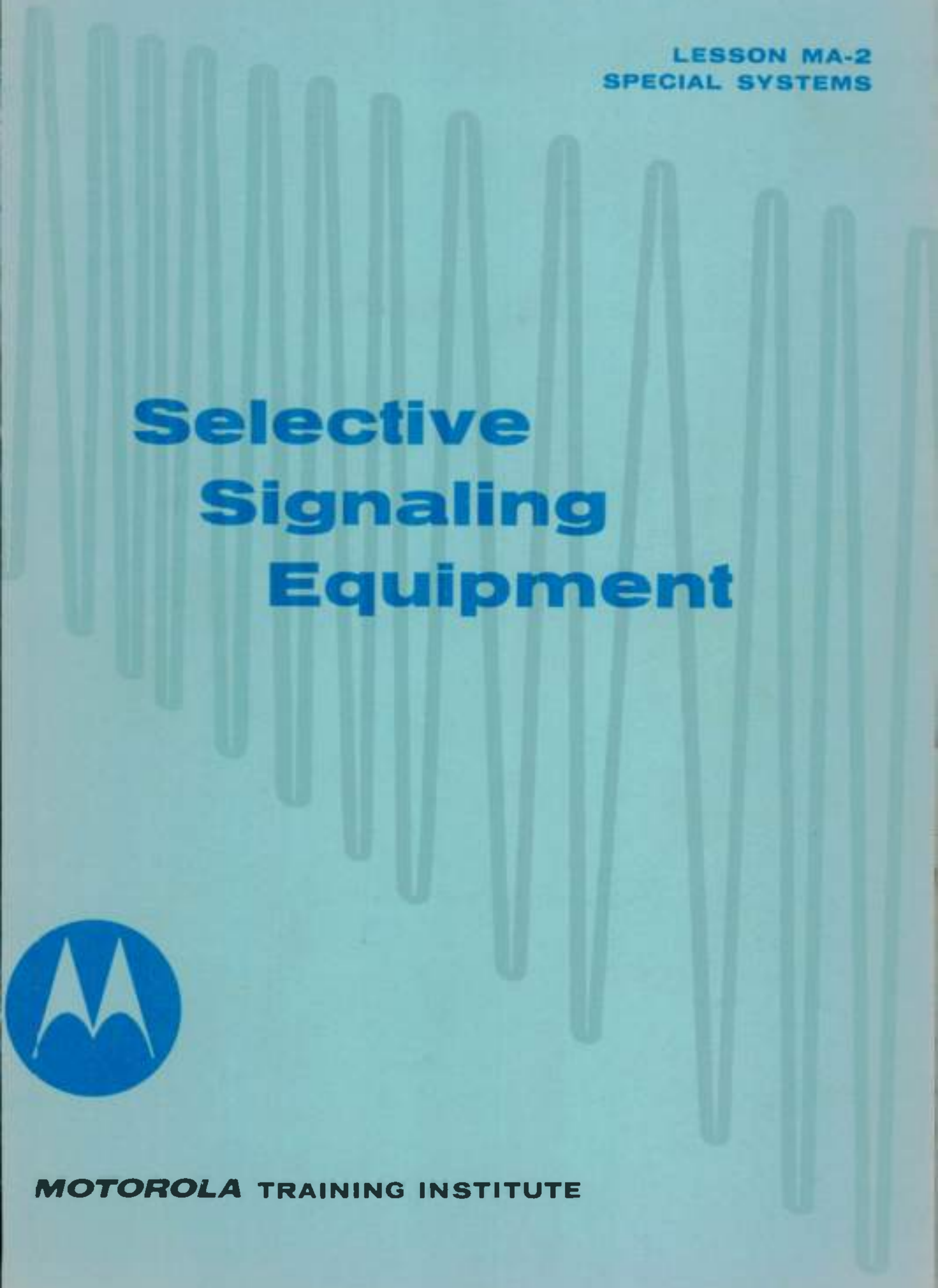

LESSON MA-2
SPECIAL SYSTEMS

Selective Signaling Equipment

MOTOROLA TRAINING INSTITUTE

A TWO-WAY RADIO COMMUNICATIONS TRAINING PROGRAM

LESSON MA-2
SPECIAL SYSTEMS

Selective Signaling Equipment

—one of a series of lessons on two-way FM communications—

MOTOROLA TRAINING INSTITUTE
4501 W. AUGUSTA BLVD., CHICAGO 51, ILLINOIS
APPROVED BY THE STATE OF ILLINOIS
DEPT. OF REGISTRATION AND EDUCATION

PREFACE

This is one lesson of a complete Motorola Home-Study Course which presents to the Service Technician both the principles of operation and the maintenance of two-way FM radio systems. The program covers mobile, portable and base station equipment, including the latest transistorized units.

SELECTIVE SIGNALING EQUIPMENT

LESSON MA-2

TABLE OF CONTENTS

NOTICE

Diagrams and figures referenced in text are "fold-outs" in back of each lesson, for use while studying. The Examinations are also there.

Providing prompt customer service, be it orange juice or rug cleaning, is essential in this competitive age. Thousands of customer service firms are utilizing two-way mobile radio to increase the speed and efficiency of their operations.

SELECTIVE SIGNALING EQUIPMENT

Lesson MA-2

Introduction

In the preceding lesson we discussed the need for a two-way communications system which would provide a certain degree of "privacy" when a channel is shared with others in the same area. We found a solution in the Private Line tone coding system. In this system, receivers will not respond to signals on the channel frequency unless the signal includes the proper coding tone to keep the receiver squelch open.

Selective calling equipment insures privacy between stations operating within one system. Motorola's QUIK-CALL system does just that. Either individual stations or combinations of stations may be selected to receive a particular transmission without disturbing other receivers in the same system. This selection is operative only from the base station, not from the mobile units. So long as a receiver is not "called" by the base transmitter, it also will be unresponsive to transmission from other systems using the same channel. This affords a certain degree of "private" operation, for the receiver responds only to those messages meant for it; the operator does not have to listen to a lot of messages which do not concern him.

In operation, the audio circuit is broken before the signals reach the speaker, so that none of the undesired messages will be reproduced. This audio circuit is completed (by the closing of a relay) only when certain coding tones are received. Four tones are used by the QUIK-CALL system, in order to provide a great number of combinations for alerting the different receivers. Since two of the coding tones may be common to several receivers, this arrangement provides considerable flexibility for group calling.

Transmission of the coding tones is automatic. The operator merely selects the tones corresponding to the receiver he wishes to call and then depresses a "code start" button. This activates several relays and timing circuits, which send out the proper alerting tones. The first two tones are transmitted during the first 3/4 second; after a short "silent" interval, the second group of two tones is sent.

All four coding tones will have been transmitted within two seconds from the time the operator depresses the start button. A neon lamp on the control panel tells the operator that the tones are being transmitted. As soon as the coding tones are completed this lamp goes out, which means that the operator may now transmit his message without interfering with the coding signals.

Figure 1A shows a block diagram of the QUIK-CALL equipment used in connection with the transmitter. Twelve tone-oscillators are in constant operation, each oscillator generating a very stable audio signal. For convenience, each tone is identified by a number or letter. In low-frequency tone systems the first 10 tones are identified by the numbers 1 through 0, and the letters A and B designate the two final tones. (High-frequency tone systems have letter designations from C to P, I and O being omitted.)

The output of the oscillators is fed to the selector box where we find two rows of buttons, the 12 buttons of each row being labeled from 1 through B for low-frequency tones. If the operator wishes to call a receiver having code tones of 1 and 3 for the first tone pulse and tones 5 and 7 for the second code pulse, he depresses buttons 1 and 3 of the first row of buttons and 5 and 7 of the second row. He then pushes the "code start" button momentarily and the signal tones are automatically transmitted. When they are completed, the lamp goes out. The operator may now talk to the operator at the selected receiver.

From the selector, figure 1A, the selected tones are next applied to the timer. The first group of tones selected on the upper row of buttons are transmitted for 0.75 second. (The transmission is controlled by a tube, several relays, and associated circuitry.) After 0.75 second, the transmission of the first group of tones is stopped and there is an interval of about 0.2 second before the second tone pulse starts. This interval is also controlled by a timing circuit. The second group of tones is sent in the next pulse, which also lasts for about 0.75 second. With the completion of this pulse, the QUIK-CALL equipment has performed its assigned function.

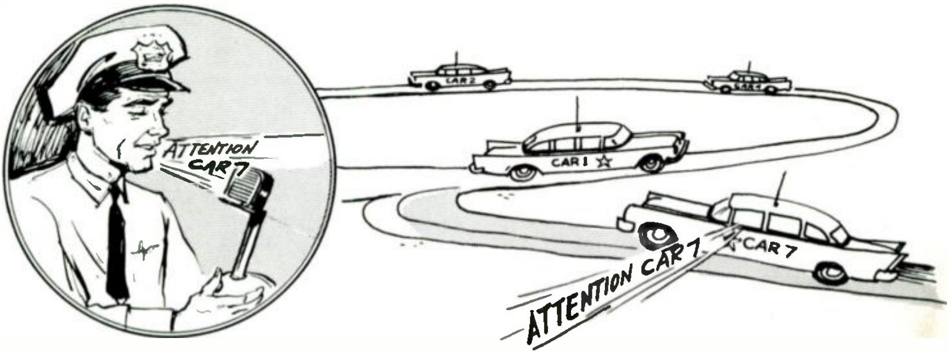

Quik-Call Radio Provides Selectivity Within a System: One Car may be Called Separately--the Remaining Vehicles in the System are Silent.

Another button at the selector box enables the operator to make a "group call" to several receivers having common code tones. The selection of these tones is made from the lower row of buttons and the operator then depresses the "group-test" button for 4 seconds. All receivers having the tones selected for this group call are thus alerted.

The tones, selected for either QUIK-CALL or group call, pass through an amplifier section before reaching the transmitter. The tone level at the oscillator output is not strong enough to properly modulate the transmitter, so an amplifier becomes necessary. The power supply shown in figure 1A is used both by the tone oscillators and by the amplifier.

At the receiver, the speaker remains disconnected from the output until the proper coding tones have been received. These tones activate a control relay which closes the audio path to the speaker. The block diagram of figure 1B testifies to the simplicity of the system. So long as the operator leaves his microphone (or handset) "on the hook," the receiver will be in QUIK-CALL condition. The relay remains deenergized until the correctly coded signals are received. When this happens the relay connects the receiver output to the speaker. When the operator removes the microphone, however, the speaker is connected directly to the receiver output and the receiver is no longer controlled by the QUIK-CALL circuitry. We shall study this arrangement in detail later.

Pulse Control Circuits

Figure 2 shows the basic method for controlling the transmission of the first group of QUIK-CALL tones. The tones required for the first pulse are selected by depressing the corresponding buttons (switches) in the top row of buttons on the control panel. These tones are transferred to the audio amplifier, but first the contacts of relays K101 and K-1 must be closed. To close relay K101 (located on the selector panel chassis), a sequence of events must take place. First, the "code start" switch is depressed; this charges capacitor C4, which sets the first pulse timer in operation.

As a result, relay K1 (in the cathode circuit of the timer tube V1A) is operated and its contacts are closed. This in turn (1) completes the tone path to the audio amplifier, and (2) completes the path which allows relay K3 to energize.

Relay K3 serves three fundamental purposes in figure 2. First, it turns "on" the transmitter by causing the transmit-receive relay to close. Second, it closes a timing circuit which keeps relay K1 energized for approximately 0.75 second. Third, it closes the path for the operation of relay K101. With relay K1 locked for 0.75 second, relays K3 and K101 will also remain energized during this time. Relay K101 has completed the path for the two tones, which are now applied to the audio amplifier. The tones at the amplifier output are applied to the transmitter modulator.

Relay K1 releases after 0.75 second, but another circuit holds relay K3 until the second tone pulse is started. (This keeps the transmitter on the air.) Relay K1 has released, however, and the tones no longer reach the modulator. Until the second pulse starts, then, there is a short period with no modulation.

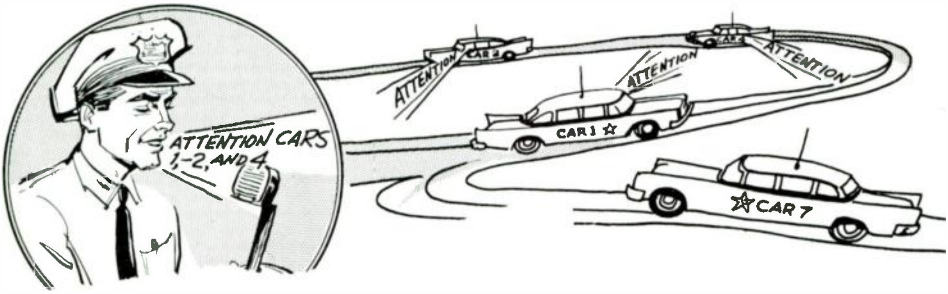

An Important Feature of Quik-Call is Group Calling: a Predetermined Group of Vehicles may be Called Simultaneously.

The operation of the second pulse is illustrated in figure 3. Capacitor C2B has charged during the time that relay K1 was operated. When the relay releases, the charged capacitor is connected into the grid circuit of the second timing tube, V1B. The tube conducts and K2 closes, being held closed for approximately 0.75 second by means of a timing circuit. The contacts of relay K2 complete the circuit, keeping K3 closed, and K3 in turn keeps relay K101 energized during the second pulse. The tones selected by the second row of buttons are now transferred to the input of the audio amplifier through the contacts of relays K101 and K2. The transmission of this second pulse lasts for the 0.75 second that relay K2 is held by its timing circuit.

The Console

Figure 4 shows the complete circuit of the QUIK-CALL console. Located near the operator at the base station, this console contains all the components necessary to generate, select, and time the QUIK-CALL signals used in this system.

The console is made up of two basic sections, (1) the selector panel and (2) the power supply and timer chassis. On the selector panel there are two rows of buttons from which the operator selects the various coding signals, a "code start" button which is depressed to start a coding signal, a "group test" button for group calls, a "release" button to release the depressed buttons, an "auto-rel." button which provides automatic release of the buttons after a completed code transmission, an indicator lamp which lights during the transmission of coding signals, and a meter which monitors the level of the tones being sent to the transmitter.

The power supply and timer chassis includes (1) a power supply, (2) a 12-tone oscillator deck (3) the timer circuits, and (4) an audio amplifier section. We shall start our detailed analysis of the QUIK-CALL equipment with the power supply.

The Power Supply

The power supply furnishes four output voltages: 250 VDC, 210 VDC, 8 VDC and 6.3 VAC. These voltages are obtained from two secondary windings. The high-voltage winding has a full-wave bridge selenium rectifier section, with an output of approximately 250 volts (at the filter input). This is used for the high DC supply (designated B++). The low DC supply (210 volts) is provided at the output of the filter section. The 6.3 VAC filament winding is also used to obtain the 8 VDC output. A single rectifier and a filter section produce the positive 8 volts, which is used as a biasing voltage at the cathodes of the tubes in the timing circuits.

Tone Oscillator Deck

Only one tone oscillator is shown in figure 4; the others are identical. The oscillator uses a 5963 twin triode, a ruggedized version of the 12AU7 tube. The oscillator, which is similar to the tone oscillator discussed in the preceding lesson, operates as a multivibrator. Section A of the tube is the basic oscillator, with section B acting as a feedback amplifier and phase inverter. The vibrasender is in parallel with the feedback voltage from the plate of tube section B to the grid of the oscillator; only that frequency which corresponds to the natural vibrating frequency of the reed can produce oscillation. The vibrasender has a very high effective Q and it maintains a high degree of frequency stability.

Capacitor C202 between the two plates provides negative feedback, which reduces the harmonic content and makes the output waveform nearly sinusoidal. The oscillator output is taken from across the plate circuit of section B, and an isolating resistor and capacitor are connected in series with a potentiometer, the output of the oscillator being controlled by the adjustment of the potentiometer. Each oscillator has a separate output voltage control. A Master

Tone Control, located near the individual tone output adjustments, determines the voltage applied to the amplifier, thus regulating the amount of modulation voltage to the transmitter. The output of the tone oscillators is terminated at the switches on the control panel. Each tone is connected to its two corresponding switches, one each in the top and bottom rows.

The Complete Tone Path

The first two tones of a 4-tone QUIK-CALL transmission are selected on the upper row of buttons, switch S105 in figure 4. This switch is mechanically designed so that only two buttons may be depressed at any one time. The tone with the lower number is applied to contact 5 of relay K101, and the second tone to contact 7.

When relay K101 is energized, the tones are combined (relay contacts 6 and 8 are tied together) and reach contact 12 of relay K1 in the timer circuit. When relay K1 is operated, the tones are applied through contact 11 of the relay to the Master Tone Control, R43. Resistor R43 applies all or some portion of the tone voltage to the audio amplifier, V2.

The output of the amplifier is available at terminals 7, 8, 9 and 10 of terminal board TB1. The connection to terminal 7 is completed only when relay K3 is operated. Terminals 7 and 8 supply a small output voltage with an impedance of 125 ohms. The same voltage and impedance is present at terminals 9 and 10, but the voltage at terminals 9 and 10 is connected directly to the output transformer and does not depend upon the contacts of relay K3. Output terminals 7 and 10 are used for a larger output voltage, at an impedance of 500 ohms, when a jumper is connected between terminals 8 and 9.

A meter on the control panel is used to monitor the level of the tones being sent to the transmitter. Calibrated in decibels, this meter is connected across the full output of the amplifier and indicates the relative amplitude of the tones.

The path for the tones selected from the lower row of buttons (S106) for the second pulse is similar to the path for the first pulse except that they reach the amplifier by passing through contacts 1, 2, 3 and 4 of relay K101 and contacts 6 and 7 of K2.

The Audio Amplifier

The audio amplifier provides the necessary amplification for the audio tones to give them sufficient amplitude to modulate the transmitter. A single 5963 type tube is used for both stages of the amplifier.

The left-hand section of the tube is the first stage. Its cathode bias resistor is unbypassed in order to provide negative feedback, thereby improving the frequency response. Resistor R26 is the plate load, with the output capacitively coupled (C8) to the grid of the right-hand section. This section also uses an unbypassed cathode bias resistor. Still further improvement of the frequency response is realized by means of the feedback capacitors (C6 and C7) between the plates of the two triode sections.

The transformer has a split secondary, each winding an impedance of 125 ohms. When these windings are connected in series (by placing a jumper between terminals 8 and 9 at the terminal board), the total secondary impedance is 500 ohms. For applications requiring output voltages between 0.5 and 1.5 volts, connections are made to terminals 7 and 8 of the terminal board; for an output of from 1 to 3 volts, terminals 7 and 10 are used. Where less than 0.5 volt is desired, a voltage divider consisting of resistors in series and having a total resistance of 500 ohms is connected between terminals 7 and 10, with the output taken from the appropriate point on the divider. When using any of these connections, it is necessary to install a jumper between terminals 8 and 9.

First Tone Pulse

To transmit a QUIK-CALL signal, the operator first depresses four buttons, two in the upper row and two in the bottom row. He then pushes the "code start" button, holding it down until the red indicator lamp goes on, which happens in less than one second. The operator may now release the "code start" button. The transmission of the proper QUIK-CALL tones will be performed automatically. Let us now analyze the operation of the equipment during the transmission of the first pulse. In order to make it easy to follow this first tone pulse operation, the circuit is printed in red in figure 4.

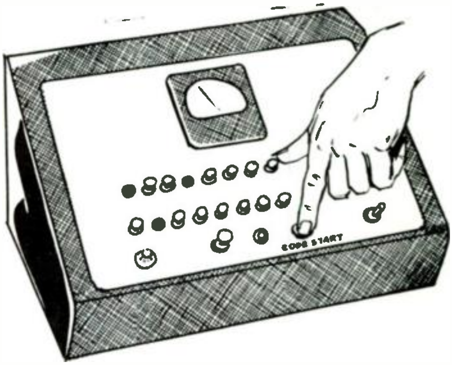

Quik-Call Code Tones are Automatically Operated, Timed and Transmitted as Soon as the Operator Depresses the Code Start Button.

We have already traced the path of the tones selected by the buttons in the upper row (switch S105). For these tones to reach the modulator, it is necessary to energize relay K1, which in turn operates relays K101 and K3. When the "code start" button is depressed, the 250 volt (B++) supply is applied to the grid of timer tube V1A, making that tube conduct heavily. Here is how this is accomplished. Terminal 2 of the start switch (S101) is connected to B++. This voltage is applied through switch contacts 1 and 2 to the grid of circuit of V1A. Capacitor C4 is in series with the grid resistor R8, but the full supply voltage is impressed across the resistor the instant the switch contacts engage.

Quik-Call Allows for Remote Control by Radio. Here a Distant Tower Light has been Turned On.

The cathode return path is through the coil of relay K1 to the positive side of the 8-volt bias supply. This voltage does not initially bias the tube to cut-off but, without the positive pulse at the grid, the cathode current is too small to energize the relay. As soon as the positive pulse is applied to the tube grid, however, the tube conducts heavily and the relay energizes. As we know (from the simplified sketch of figure 2), this controls the transmission of the first two tone pulses.

The holding of relay K1 for 0.75 second is accomplished in connection with the operation of relay K3. When relay K1 operates, its contacts 4 and 5 close, applying 250 volts to the coil of relay K3. (Resistor R20 limits the current in the relay coil to the proper amount.) Before relay K3 is energized, its contacts 9 and 10 are closed, completing a path for charging capacitor C2A. The complete circuit is through resistor R21 and contacts 8 and 9 of relay K2. Thus, before relay K3 energizes, capacitor C2A has been charged to 250 volts.

When K3 is operated by the action of relay K1, capacitor C2A is connected into the grid circuit of V1A through relay contacts 10 and 11. This positive charge maintains V1A conductive for approximately 0.75 second, and controls the timing of the first pulse. The pulse duration can be changed by using one of the alternate resistor connections (R7-R10) in the grid circuit of V1A. A large resistance produces a longer pulse. A small resistance permits a faster discharge of C2A, and hence a shorter pulse results.

Relay K1 has several other functions besides operating relay K3. The closing of contacts 11 and 12 completes the path for the tones to the grid of the amplifier. Contacts 6 and 7 are used in connection with remote operation. (This ground circuit discontinues the operation of the equipment from the remote position.) Contacts 1, 2, 3, 8, 9 and 10 are for the control of the second pulse and will be discussed shortly.

When relay K3 energizes, several other functions are provided besides the holding of relay K1. The closing of contacts 1 and 2 applies 250 volts (1) to the red indicator lamp on the selector panel and (2) through contacts 3 and 4 of the code start switch, S101, to the coil of relay K101. Relay K101 then closes, applying the audio tones to the amplifier. In order for relay K101 to become energized, however, the code start button must be held down (for a fraction of a second) until the indicator lamp lights, indicating that B++ has been applied to K101.

Three pairs of normally open contacts on relay K3, connected to terminals 1 through 6 of the terminal board, are used respectively (1) to operate the transmit relay of the transmitter, (2) to mute the microphone during code tone transmission, and (3) to perform any other similar function. When contacts 12 and 13 of the relay close, they complete the audio output circuit from the amplifier to the modulator. Contacts 14 and 15 are used to apply 6.3 volts AC to remote equipment for certain control purposes.

So much for the operation of the first tone pulse. The tones selected in the top row of buttons are sent to the amplifier, reach the modulator stage of the transmitter, are placed "on the air," and finally reach the receiver. This pulse is transmitted for a period of 0.75 second, during which time relays K1, K3 and K101 remain energized.

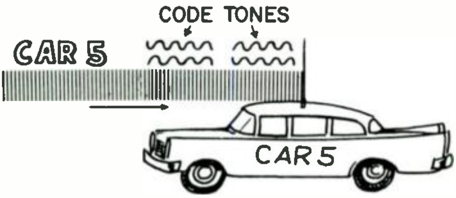

Quik-Call Operation Depends upon Four Coding Tones Sent at the Beginning of the Transmission.

Pulse Spacing

For the proper operation of QUIK-CALL equipment, it is essential that the second set of pulse tones be delayed for a short period of time, 0.2 second being sufficient. Unless this is done, receivers having the same coding tones, but in a different order, will respond to calls not meant for them. This condition arises as a result of the continued vibration of the vibrasponder reeds in the receiving equipment for a short time after the tone transmission has been discontinued. It is thus necessary to insert a short interval of no modulation after the first pulse, to permit the reeds in the vibrasponders to stop vibrating. After 0.2 second the reeds will have damped to such an extent that contact will no longer be made.

The required spacing is accomplished by the discharge of two capacitors, C3 and C2B, into the grid circuit of V1B. During the first pulse (while relay K1 is energized), capacitor C3 is charged to 250 volts, with its "right-hand" side (as shown in figure 4) positive with respect to ground. (The left-hand side of the capacitor is grounded through relay contacts 9 and 10.) Capacitor C2B is also charged to 250 volts, through relay contacts 2 and 3.

As soon as relay K1 releases, these two capacitors are connected so that they discharge through R16, the grid resistor of the second pulse timer, V1B. The positive side of C2B is connected to the grid through contacts 1 and 2, while the negative side of C3 is connected to the grid by the action of contacts 8, 9 and 10 of the relay. The negative charge on C3 is applied to the grid directly, but the positive charge (on C2B) is "delayed" by the series connected resistor R14, which makes the time constant of this circuit much longer than that of C3.

Thus, the grid of V1B first becomes negative, remaining so for a short period of time. As capacitor C3 discharges quickly, the grid soon becomes less negative. At the same time, capacitor C2B discharges through R14 and R16, forcing the grid to swing positive. Within 0.2 second, the grid reaches the point where V1B conducts, operating relay K2 in its cathode circuit.

During the brief interval between the end of the first pulse and the beginning of the second pulse, it is necessary for relays K3 and K101 to remain energized. Relay K101 will remain energized as long as relay K3 is energized. Relay K3 supplies 250 volts to terminal 13 of relay K101, and with contacts 12 and 13 closed, this 250 volts is applied to its coil, thereby locking the relay. The only way in which this relay will now open is to remove the 250-volt supply by releasing relay K3. Relay K3 is held closed between pulses by the charge that has accumulated on capacitor C5. (When relay K1 is energized, C5 charges to 250 volts through contacts 4 and 5.) When relay K1 releases, this capacitor discharges through the coil of K3, keeping this relay energized.

Second Tone Pulse

As soon as the second pulse begins, relay K3 is operated through the contacts of relay K2. We have already seen the basic operation of relay K2 (figure 3). This relay performs several functions. For one thing, it causes K3 to operate. This is accomplished by means of contacts 9 and 10 (of K2) which apply 250 volts to the coil of K3. Contacts 6 and 7 of K2 close, completing the path for the tones to the audio amplifier. This path is also completed by closed contacts of relay K101 (but this relay, we know, is being held closed by K3). Contacts 11 and 12 of K2 close, completing the grid return to ground through resistor R11. This smaller grid resistance establishes the correct timing circuit for the grid of V1B. Before relay K2 can release, capacitor C2B must discharge. The path is now through R11, and this time constant is correct for the second pulse. In the meantime, contacts 2 and 3 of K2 also close, charging capacitor C1B to 250 volts. We shall see the purpose for this later.

After 0.75 second, C2B no longer holds the grid of V1B sufficiently positive for its cathode current to operate relay K2; as a result, K2 releases. When K2 releases, K3 and K101 also release. The transmission of the second set of code tones is now completed. The red indicator lamp goes out, the meter on the selector panel reads zero, and the transmit-receive relay (in the two-way equipment) also releases, placing the equipment in standby (receive) condition. If the operator wishes to send a message, however, he may use the mike button (or foot switch) to keep the transmitter on the air after the tone transmission is completed.

Selector Button Release

Provision is made for the operator to release any buttons that may be depressed, at any time. An "AUTO. REL." (automatic release) switch also provides for releasing the buttons automatically at the termination of the second pulse.

The manual "RELEASE" switch, S102, normally connects the 250-volt supply line to capacitor C101 and the capacitor is usually fully charged. As soon as this "release" button is depressed, however, the capacitor is connected to the coil of the "button release solenoid" (L101). The solenoid immediately releases both rows of selector buttons.

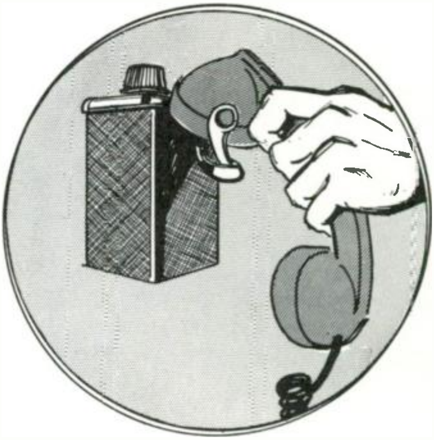

Lifting the Handset from the Hang-Up Box Stops Quik-Call Operation and the Receiver Operates in a Normal Manner.

Automatic release is accomplished by capacitor C1B through contacts 1 and 2 of relay K2. When this relay is energized during the second pulse, the capacitor is charged to 250 volts through contacts 2 and 3. When the relay releases at the end of the second pulse transmission, this charged capacitor is connected (through contacts 1 and 2) to the "button release solenoid." The functioning of this circuit requires switch S104 to be in its automatic position. Also, relay K101 must be energized, for the path is through its contacts 10 and 11. (It is normal for this relay to remain energized for a short time after relay K2 releases.) If the switch is not in the "AUTO. REL." position, the manual "RELEASE" button must be used.

Group-Call

Besides alerting a single station within the system by means of the 4-tone, 2-pulse system, it is also possible to make a call simultaneously to a group of stations within the system. Two tones are necessary for group-call, and they are selected on the bottom row of buttons. Instead of pushing the code start button, the "group-test" button is now depressed. The timing of this transmission is now no longer automatic. Instead, the timing is up to the operator, and for this operation he must keep the button down for approximately four seconds in order to properly alert the desired stations.

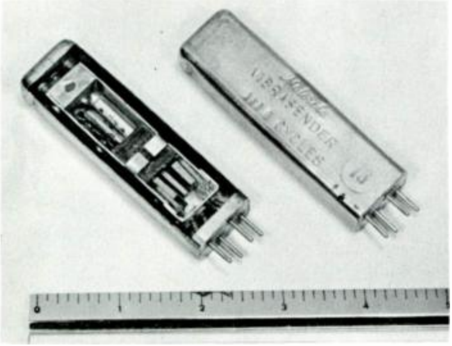

Quik-Call Code Tones are Controlled by Vibrasenders, the Same as in Private Line Systems.

When the "GROUP-TEST" switch (S103) is closed, the 250 volts available at switch contacts 1 and 3 is applied to the coils of relays K101 and K2. The contacts of relay K101 complete the tone path to the contacts of relay K2, and with relay K2 operated, the tones reach the audio amplifiers. Because K2 is operated, relay K3 also closes. Relay K3 completes the audio output circuit to the modulator, causes the indicator lamp to light, turns on the transmitter, and mutes the microphone. The group-call tones are transmitted for as long as the operator holds down the group-test button. After four seconds, however, the receivers should be alerted. The desired message may now be sent.

Meanwhile, at the Receiver . . .

The basic QUIK-CALL section of the receiver is shown in figure 5. Depending upon the switch in the hang-up box, the audio at the secondary of the output transformer may be applied to the speaker or it may be applied to the QUIK-CALL unit.

If the microphone or handset is off the hook, the audio (available at terminal 46) is applied through contacts D and C of the switch to terminal 45. From terminal 45 the path proceeds through jumper JU-1 to the speaker. Thus, if the hook in the hand-up box is "up," the receiver output will be applied directly to the speaker. QUIK-CALL control is possible only when the handset or microphone is on the hook.

In normal QUIK-CALL operation, then, the audio path does not lead directly to the speaker as described above, but rather through contacts D and E of the switch to terminal 42. From terminal 42 the audio goes to terminals G and F of relay K1 and on to the four vibrasponder coils.

The only way in which the audio can now reach the speaker is for the relay to be operated. The audio then finds a path to the speaker through relay contacts F and E. The relay is energized only if the correct tones are received. When this occurs, the vibrasponders complete the circuit (partly shown in the figure), which causes the tube to conduct and operate the relay.

The length of time that the relay remains energized depends upon the position of the "lock-nonlock" switch. With the switch in the "nonlock" position, the timing circuit will keep the relay operated for about 7 seconds; in the "lock" position, the relay stays energized until the operator removes the mike from its hook.

With a QUIK-CALL signal coming into the receiver, the pulses quickly capture the circuit and cause the relay to close. The operator will usually hear the end of the second pulse transmission. Or, if the received signal is weak so that the second pulse just opens the receiver at the end of the pulse, the operator will hear the squelch tail (if the operator at the base station does not keep the transmitter "on the air"). In this way, the operator is alerted to an incoming message before the message is actually sent.

If the operator does not complete his message during the seven seconds following the second pulse, and if the operator at the receiver does not remove his microphone, the relay opens at the end of this period, and the receiver is effectively "dead." (We are assuming that the function switch is still in the nonlock position.)

If the receiver QUIK-CALL switch is placed in the "lock" position, however, once the relay has been closed by the tone pulses the relay will remain locked-in until the operator removes his microphone from the hook. The lock-in position of the switch places the grid at near-cathode potential, through relay contacts A and B, thereby allowing the tube to conduct until the microphone is removed. With the microphone off the hook, the right-hand terminal of the relay coil is grounded through its contacts A and B, and contacts A and B of the hang-up switch. With both terminals of the relay coil grounded, the relay releases.

Terminals C and D of the relay "make" when the relay operates, and they can be used to close a circuit which operates a horn, lights a lamp, or performs a similar function. Thus the operator who has been away from the receiver knows that he has been called. For this function, the switch must be placed in the "lock" position.

The Vibrasponder Circuit

Figure 6 is a complete diagram of the QUIK-CALL unit required at the receiver. For QUIK-CALL operation, four vibrasponders control the conduction of the tube, V1, and the latter determines the operation of control relay K1.

Both triode sections of V1 are initially biased so that there is but little conduction. Relay K1 in the cathode of the right-hand section will not operate, therefore, unless that triode section is made to conduct heavily. This is accomplished by making the grid positive. As we shall see, this positive voltage originates at the plates of V1.

The QUIK-CALL tones from the receiver output transformer are applied to the four coils of the vibrasponders through contacts F and G of relay K1. The tones of the first pulse must correspond to the frequency of the vibrasponders installed at E1 and E2. Assuming that this is the case, the reeds of these two vibrasponders close their "B" contacts.

Although the reed contact is intermittent, the action of the RC circuit in parallel with the contacts produces an almost steady DC voltage as the reed continues to vibrate.

The B+ voltage (present at the plates of the tubes) is applied through the vibrating reed contacts of both vibrasponders to the grid circuit of the left-hand triode. This voltage is applied to the junction of resistors R1 and R2, and charges the grid capacitor, C1, to a high DC voltage. The discharge of this capacitor, however, is through R1 and R2 in series, so that the time constant is long and the grid is kept positive for some time.

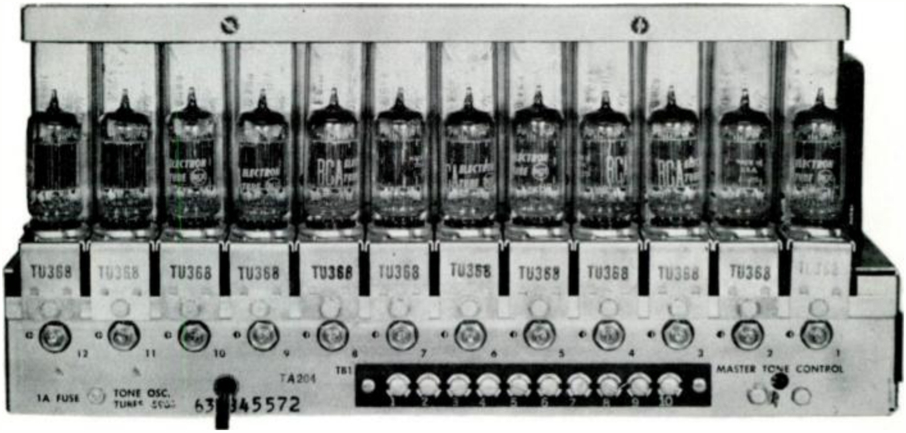

Here We See the Twelve Tone Generators, Vibrasenders, and Level Setting Adjustments, all Part of the Quik-Call Base Station.

When the grid of the tube swings positive, the tube conducts heavily and almost all of the supply voltage appears across the large cathode resistor, R3. This high positive voltage is used to unbias the grid of the right-hand triode.

Assuming that the second pulse corresponds to the frequencies of vibrasponders E3 and E4, contacts "B" of both these vibrasponders close. The positive voltage from the cathode of the first triode then charges capacitor C2 in the grid circuit of the right-hand triode. This makes the grid positive and the tube conducts. The cathode current passes through the coil of relay K1, causing the relay to operate. The charged capacitor (C2) in the grid of the triode discharges through the large resistor in parallel with it and, because of the long constant involved, the grid holds the tube conductive for about seven seconds (with the switch in nonlock position).. The relay contacts are closed during this time and the operator hears all messages that may be sent.

If the switch is in the "lock" position, however, the relay remains operated until the microphone is removed from the hang-up hook. With the switch in the lock position, the grid is returned to the top of the relay coil through relay contacts A and B. After capacitor C2 has discharged, the only remaining bias on the stage is that developed by the small cathode resistor, R5. This allows the stage to continue to conduct normally and the relay remains energized. When the microphone is removed from its hook, the blue wire leading to terminal A of the relay is grounded; with contacts A and B closed, the top of the relay (terminal J) is grounded, so the relay must release.

Receiver Group-Call Operation

Only two tones, common to a group of receivers, are required for group-call. These tones must correspond to the frequencies of the vibrasponders installed in sockets E2 and E3 (fig. 6). To alert the receivers within a group, the operator sends these common tones for a period of four seconds. These group-call tones energize vibrasponders E2 and E3 at the receiver, closing their "B" contacts and applying the plate supply voltage to grid capacitor C2 through the contacts of vibrasponder E2, R7 (3.9 megohm), and the contacts of vibrasponder E3. The tones must be continuous for approximately four seconds, as it requires this much time for the vibrasponders to operate and for capacitor C2 to charge through the high resistance of R7. After four seconds, however, all receivers which have the proper group-call tones will have been alerted. The desired message may now be sent simultaneously to all the receivers of this group.

Where group-call operation alone is desired, only two vibrasponders need be installed in the E2 and E3 sockets. (In earlier models, the wiring of E2 and E3 was different

Here We See a Quik-Call Console Utilizing High-Frequency Coding Tones (Evidenced by the Letters on the Push-Buttons).

and all four vibrasponders were required to complete these circuits.)

Level Adjustments

Although the levels of the various oscillators used with QUIK-CALL equipment are adjusted at the factory, it is important that they be readjusted (checked) according to the requirements of the system being used. Transmitters may differ as to the modulation voltage required for the same amount of deviation, and control lines have various voltage drops. It is thus necessary to adjust the tone levels for a deviation which will produce sufficient voltage at the receiver output to operate the vibrasponders. In making any level adjustments, we are thus interested in the voltage produced at the receiver rather than in the modulating voltage to the transmitter.

The various vibrasponder assemblies at the receiver require different voltage levels to produce positive operation of the reed. These levels will be found in a chart such as that of figure 7.

At the back of the QUIK-CALL console there is an adjustment for each of the individual tone outputs, plus a master tone control. The output adjustment for the separate tones are numbered from 1 to 12 and correspond to the 12 tone generators, regardless of which vibrasender is installed in the socket.

If the particular system uses high-band tones (usually the case in almost all new installations), the first steps are (1) to adjust the individual tone level for tone number 12 (labeled "P") and (2) to adjust the master level for the desired receiver output. Then, leaving the master adjustment at one setting, we adjust the remainder of the tone generators for the recommended output.

An AC voltmeter is connected at the audio input to the QUIK-CALL unit, and the receiver is unsquelched (squelch control fully clockwise). The receiver audio level control (located on the receiver chassis--not the volume control on the control head) is advanced until the reading on the meter, due to noise, is between 0.8 and 1.0 volt. The receiver is then squelched and the level adjustment for tone 12 (P) is set to approximately three-fourths maximum. The master tone control is then adjusted for a reading of 2.2 volts on the meter. (The

Here We See the 32-Button Accessory Box Connected to the Quik-Call Console.

master tone control should not be changed after this; the control for tone 12 also needs no further adjustment.) The individual tone levels may now be adjusted according to the voltage values indicated in figure 7.

Where low-band tones are used for a particular system, the level of tone number 1 is first adjusted by placing the individual tone control at three-fourths maximum and adjusting the master control to 0.70 volt. The individual levels are then adjusted according to the chart, as before.

The meter on the QUIK-CALL selector panel is not to be used in adjusting the tone levels. This meter merely indicates the level of the voltage at the console. It does not show the amount of deviation produced nor does it tell how much voltage is applied to the vibrasponders at the receiver.

Accessory Selector Box

A 32-button selector box may be used as an accessory to the QUIK-CALL console described in this lesson. This additional selector box may plug directly into the console or it may be remotely located, with an interconnecting cable between the two units. This selector box facilitates the selection of QUIK-CALL groups or group-calls by requiring only one button to be depressed for any one call. Connections may be made so that one button will initiate a QUIK-CALL function (or a group-call) without any thought as to timing. The timing is performed by the circuitry within the selector box. This piece of equipment allows as many as 32 different calls to be made, requiring only one button to be depressed for each. A red indicator lamp shows when a transmission is taking place or when the console is being used.

STUDENT NOTES

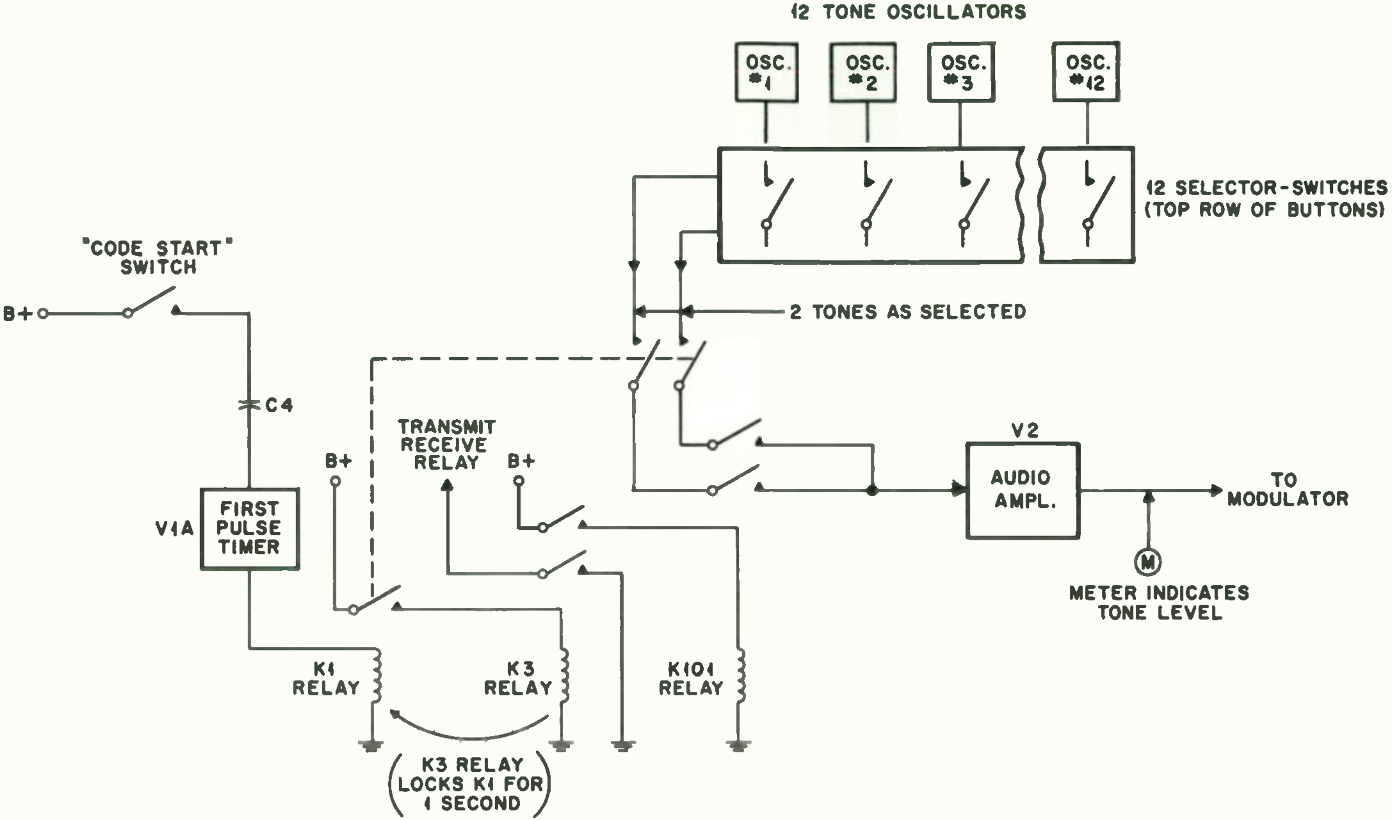

FIRST PULSE TRANSMISSION

FIGURE 2

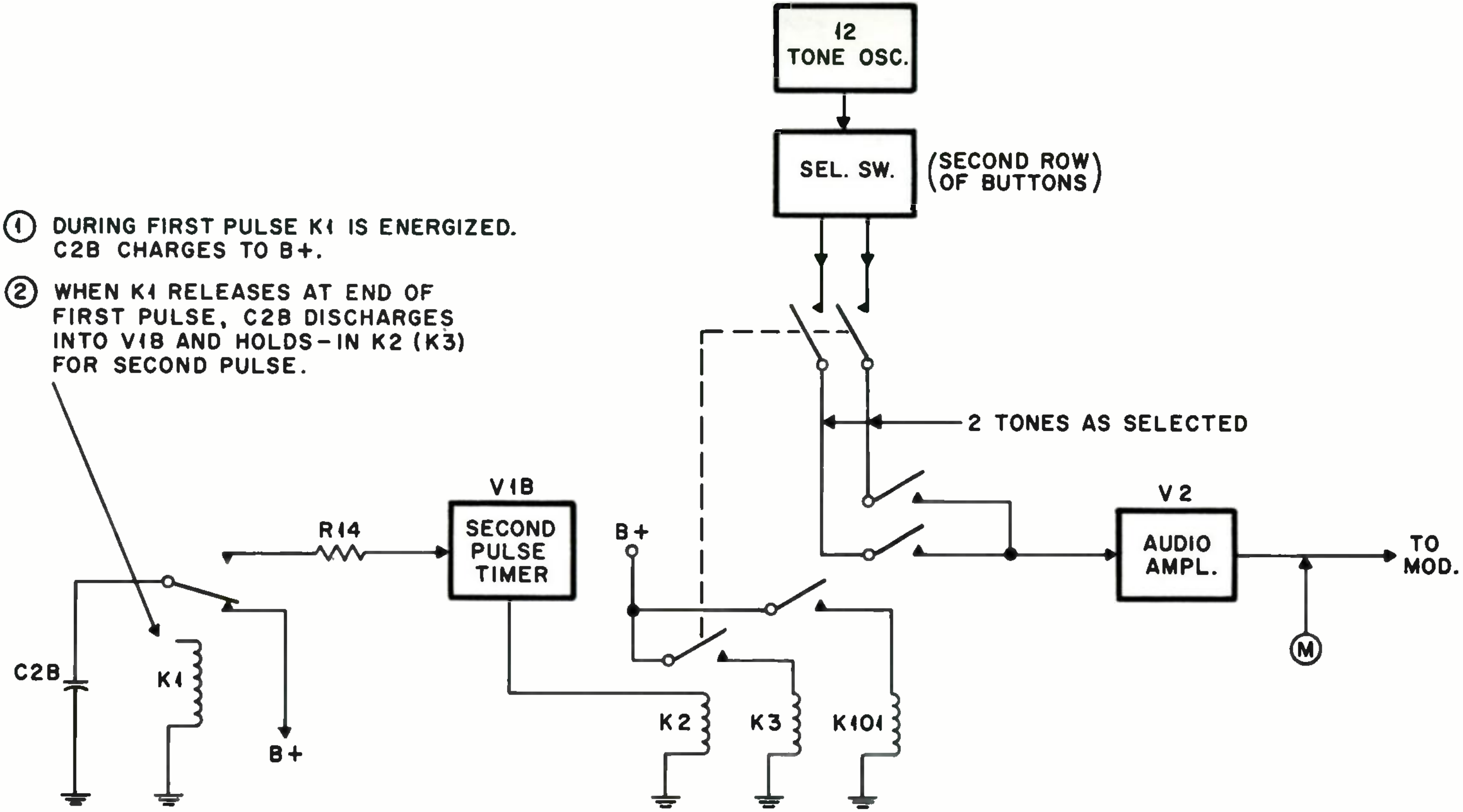

① DURING FIRST PULSE K1 IS ENERGIZED. C2B CHARGES TO B+.

② WHEN K1 RELEASES AT END OF FIRST PULSE, C2B DISCHARGES INTO V1B AND HOLDS-IN K2 (K3) FOR SECOND PULSE.

SECOND PULSE TRANSMISSION

FIGURE 3

STUDENT NOTES

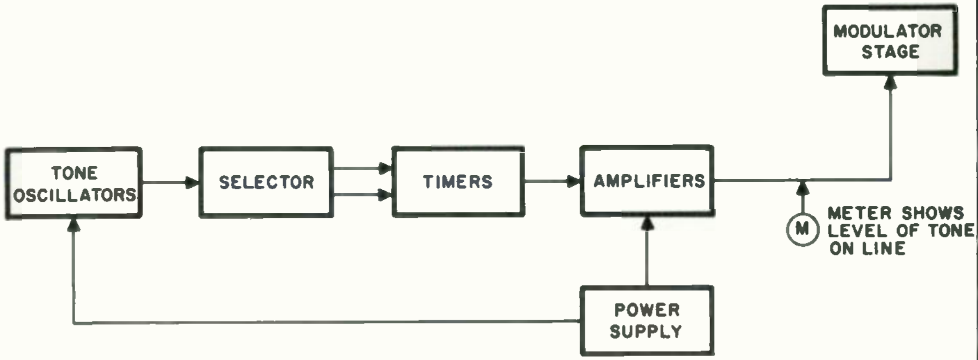

TRANSMITTER
QUIK-CALL SYSTEM

FIGURE 1A

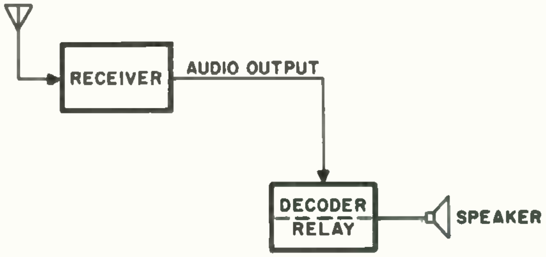

RECEIVER
QUIK-CALL SYSTEM

FIGURE 1B

STUDENT NOTES

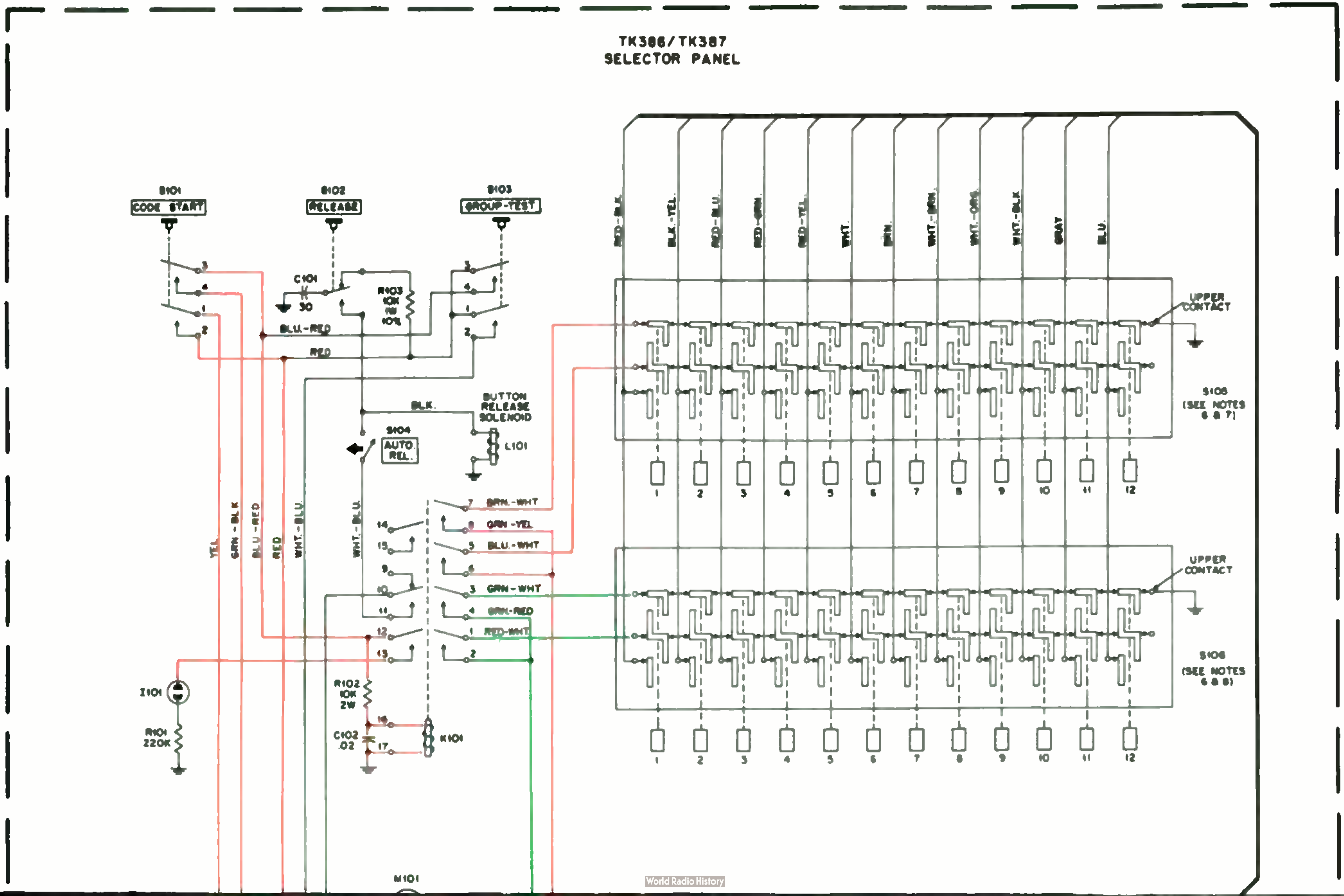
TK386/TK387
SELECTOR PANEL
S101
CODE START
S102
RELEASE
S103
GROUP-TEST
C101
30
R103
10K
1W
10%
BLU.-RED
RED
BLK.
BUTTON
RELEASE
SOLENOID
L101
S104
AUTO.
REL.
YEL.
GRN.-BLK.
BLU.-RED
RED
WHT.-BLU.
WHT.-BLU.
GRN.-WHT
GRN.-YEL
BLU.-WHT
GRN.-WHT
GRN.-RED
RED-WHT
I101
R101
220K
R102
10K
2W
C102
.02
K101
M101
RED-BLK.
BLK.-YEL.
RED-BLU.
RED-GRN.
RED-YEL.
WHT.
GRN.
WHT.-GRN.
WHT.-ORN.
WHT.-BLK.
GRAY
BLU.
UPPER
CONTACT
S105
(SEE NOTES
6 & 7)
UPPER
CONTACT
S106
(SEE NOTES
6 & 8)
1
2
3
4
5
6
7
8
9
10
11
12

TONE ADJUSTMENT TABLES

LOW BAND TONES (100 to 312.6 cps)

Push-Button	Tone Level Control	Voltage
1	1	0.70
2	2	0.62
3	3	0.53
4	4	0.53
5	5	0.53
6	6	0.58
7	7	0.65
8	8	0.72
9	9	0.79
0	10	0.88
A	11	0.98
B	12	1.08

HIGH BAND TONES (346.7 to 1084 cps)

Push-Button	Tone Level Control	Voltage
C	1	1.4 v.
D	2	1.5 v.
E	3	1.6 v.
F	4	1.7 v.
G	5	1.8 v.
H	6	1.9 v.
J	7	2.0 v.
K	8	2.1 v.
L	9	2.2 v.
M	10	2.2 v.
N	11	2.2 v.
P	12	2.2 v.

FIGURE 7.

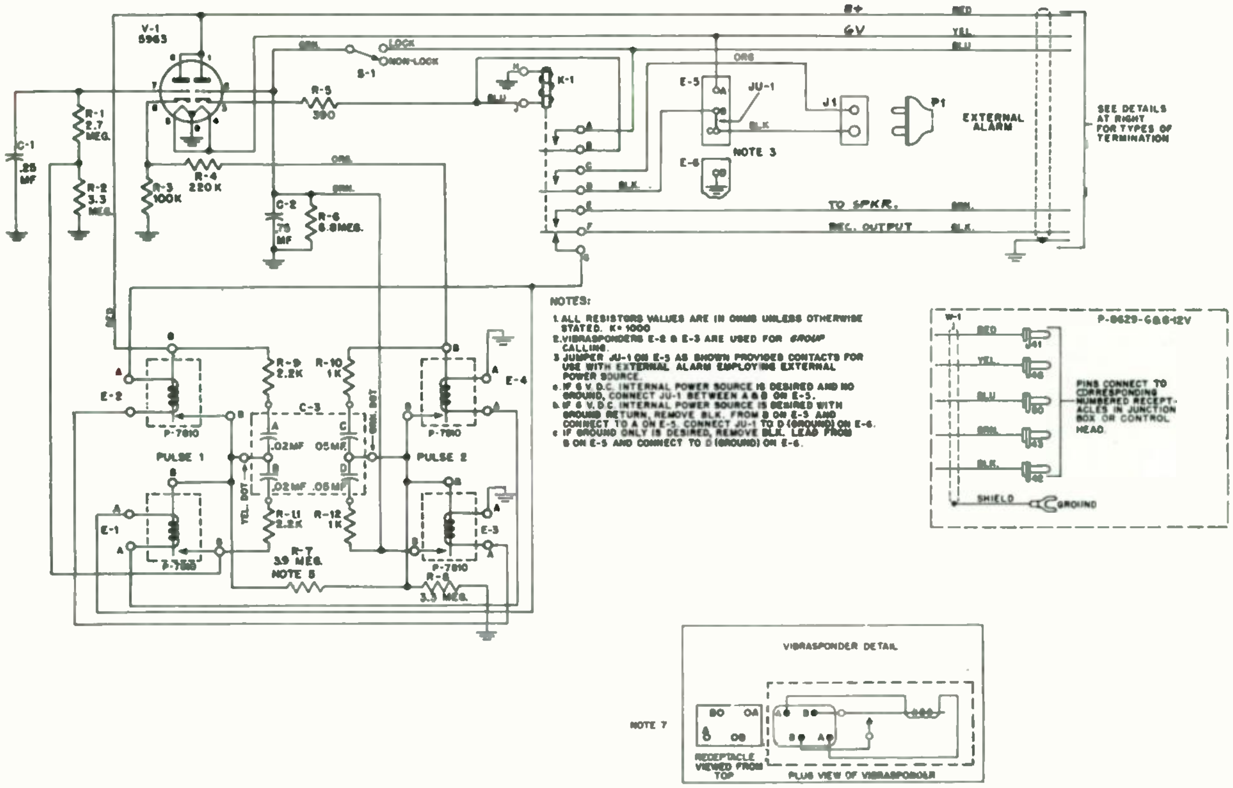

NOTES:

1. ALL RESISTORS VALUES ARE IN OHMS UNLESS OTHERWISE STATED. K= 1000
2. VIBRASPONDERS E-2 & E-3 ARE USED FOR *GROUP* CALLING.
3. JUMPER JU-1 ON E-5 AS SHOWN PROVIDES CONTACTS FOR USE WITH EXTERNAL ALARM EMPLOYING EXTERNAL POWER SOURCE.

a. IF 6 V. D.C. INTERNAL POWER SOURCE IS DESIRED AND NO GROUND, CONNECT JU-1 BETWEEN A & B ON E-5.

b. IF 6 V. D.C. INTERNAL POWER SOURCE IS DESIRED WITH GROUND RETURN, REMOVE BLK. FROM B ON E-5 AND CONNECT TO A ON E-5. CONNECT JU-1 TO D (GROUND) ON E-6.

c. IF GROUND ONLY IS DESIRED, REMOVE BLK. LEAD FROM B ON E-5 AND CONNECT TO D (GROUND) ON E-6.

RECEIVER QUIK-CALL CONTROL CIRCUIT
FIGURE 6

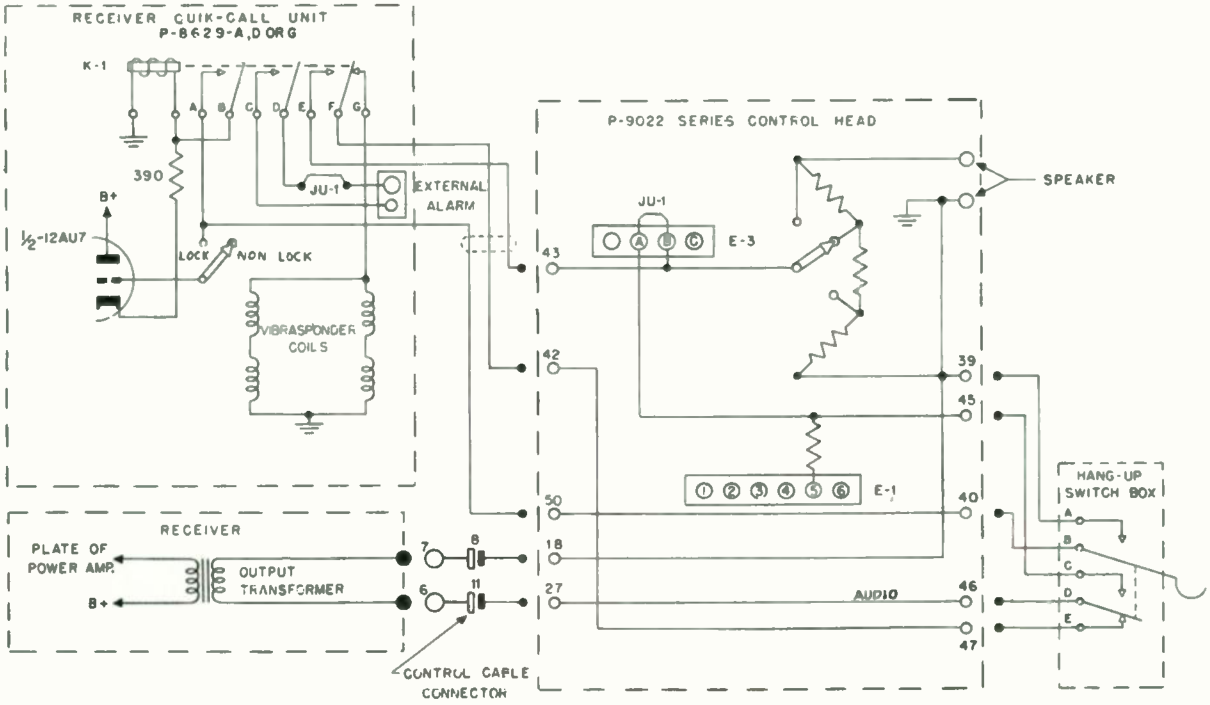

RECEIVER QUIK-CALL
SIMPLIFIED CIRCUIT OPERATION
FIGURE 5

NOTES:

1. THE MICROPHONE OR HANDSET IS SHOWN ON THE HOOK. SPEAKER CIRCUIT IS OPEN.
2. WHEN USING MILITARY MICROPHONE, JUMPER JU-1 MUST BE USED BETWEEN "A" & "B".
3. WHEN USING HANDSET, JU-1 BETWEEN "A" & "B" PUTS HANDSET IN PARALLEL WITH SPEAKER.
4. WHEN USING HANDSET AND NO JUMPER, HANDSET EARPIECE IS OPERATIVE AND SPEAKER IS MUTED EXCEPT FOR SELECTIVE CALL SIGNAL.
5. LETTER DESIGNATIONS ON HANG-UP SWITCH BOX ARE FOR REFERENCE ONLY.

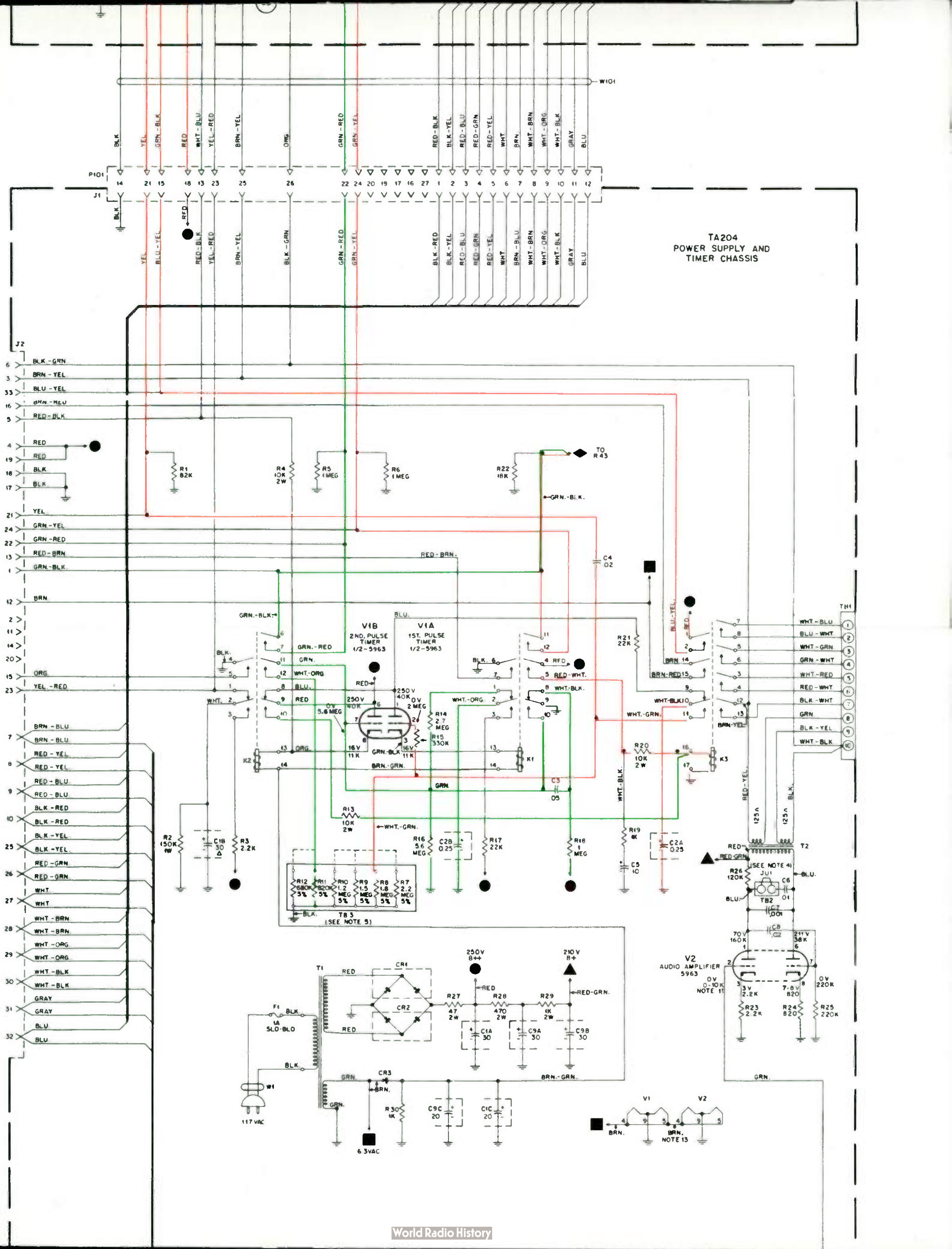
TA204
POWER SUPPLY AND
TIMER CHASSIS
W101
P101
J1
J2
TH1
BLK
YEL
GRN-BLK
RED
WHT-BLU
YEL-RED
BRN-YEL
ORG
GRN-RED
GRN-YEL
RED-BLK
BLK-YEL
RED-BLU
RED-GRN
RED-YEL
WHT
BRN
WHT-BRN
WHT-ORG
WHT-BLK
GRAY
BLU
BLU-YEL
BLK-GRN
BLK-RED
BRN-YEL
BLU-YEL
BRN-RED
RED-BRN
V1B
2ND. PULSE
TIMER
1/2-5963
V1A
1ST. PULSE
TIMER
1/2-5963
R1
82K
R4
10K
2W
R5
1 MEG
R6
1 MEG
R22
18K
TO
R43
C4
.02
R21
22K
K1
K2
K3
R14
2.7
MEG
R15
330K
250 V
40K
0 V
2 MEG
0 V
5.6 MEG
16 V
11 K
R13
10K
2W
R20
10K
2W
C3
.05
R2
150K
1W
C1B
30
R3
2.2K
R16
5.6
MEG
C2B
0.25
R17
22K
R18
1
MEG
R19
1K
C5
10
C2A
0.25
R12
680K
5%
R11
820K
5%
R10
1.2
MEG
5%
R9
1.5
MEG
5%
R8
1.8
MEG
5%
R7
2.2
MEG
5%
TB3
(SEE NOTE 5)
T1
CR1
CR2
CR3
F1
1A
SLO-BLO
W1
117 VAC
250V
B++
210 V
B+
R27
47
2W
R28
470
2W
R29
1K
2W
C1A
30
C9A
30
C9B
30
R30
1K
C9C
20
C1C
20
6.3VAC
T2
125 Ω
125 Ω
(SEE NOTE 4)
R26
120K
JU1
TB2
C6
.01
C7
.001
C8
.02
70 V
160K
211 V
38K
6
V2
AUDIO AMPLIFIER
5963
0 V
0-10K
NOTE 11
3 V
2.2K
7-8 V
820
0 V
220K
R23
2.2K
R24
820
R25
220K
V1
V2
BRN.
BRN.
NOTE 13

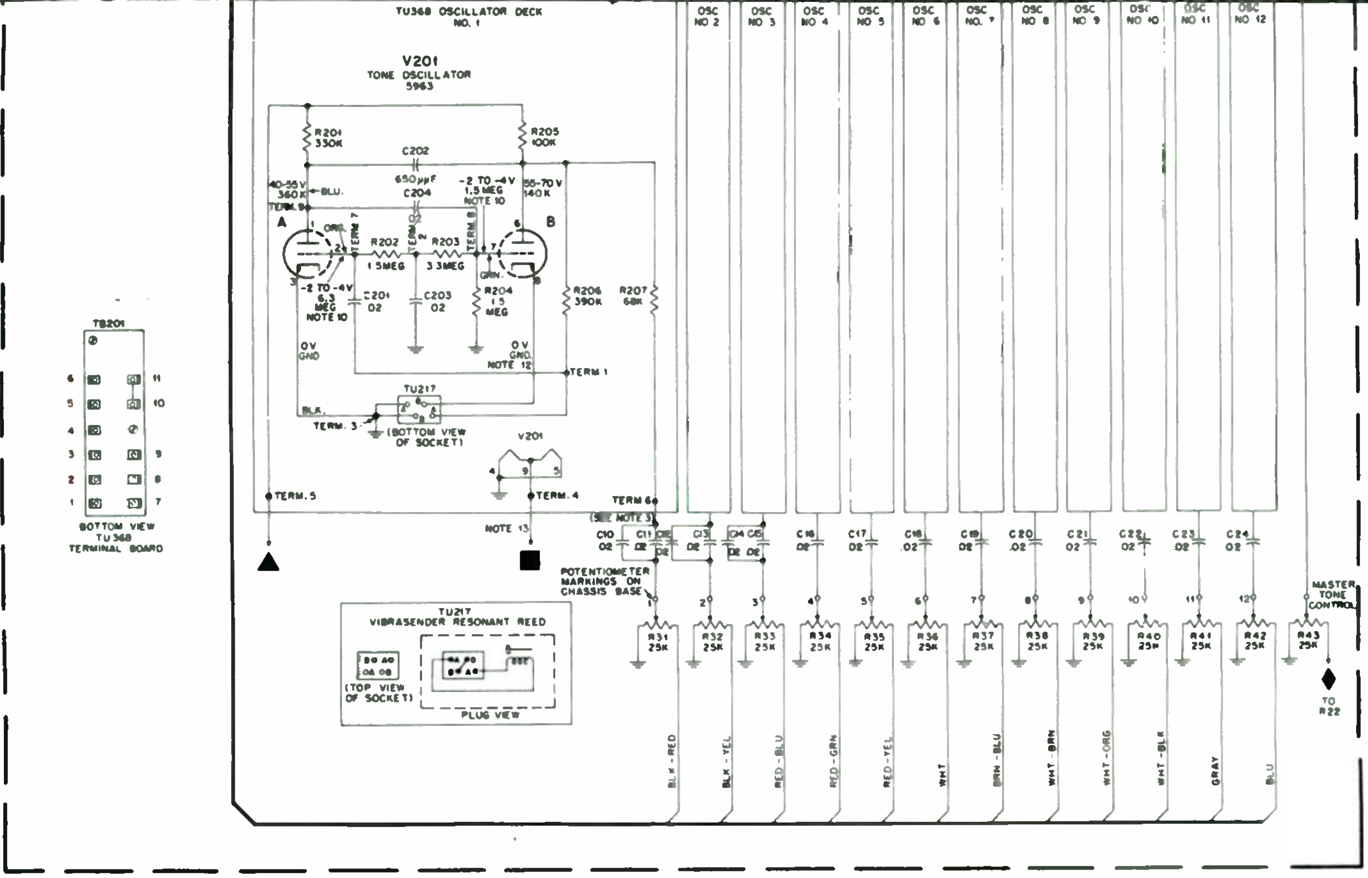

TA203 SERIES QUIK-CALL CONSOLE
FIGURE 4

STUDENT NOTES

Motorola Training Institute
4501 West Augusta Blvd., Chicago 51, Ill.

Please PRINT or use STAMP

Name ______________________ Student No. ______

Street ________________ Zone ____ Date ______

City ______________ State ________ Grade ______

EXAMINATION LESSON MA-2

1. A Quik-Call system allows the base station operator to talk to only one of a group of receivers within his system, the other receivers remaining unresponsive to his messages.
   TRUE ______ FALSE ______

2. The Quik-Call receiver will not respond to any signals on its channel unless it contains continuous coding tones of the proper frequency.
   TRUE ______ FALSE ______

3. Which of the following will alert a Quik-Call receiver?

   A. A long pulse of two tones.
   B. Two short pulses of two tones each.
   C. One strong continuous tone.
   D. One tone, occurring at the required pulse rate.

4. The Quik-Call operation is timed automatically; it is not necessary for the operator to "time" the tone transmission.
   TRUE ______ FALSE ______

5. For group calling, the tone operation is automatically timed; it is not necessary for the operator to "time" the transmission.
   TRUE ______ FALSE ______

6. The operator of a mobile Quik-Call receiver fails to replace his microphone, and the microphone hang-up switch is up. This receiver (will)(will not) receive all messages of the system. In addition it (will)(will not) receive messages directed to it.

7. A Quik-Call receiver is operated with its switch in the "lock" position. A message is received. The speaker remains connected to the receiver output until,

   A. The operator picks up his microphone.
   B. The press-to-talk button is depressed.
   C. The microphone is replaced on its hook at the end of the reply to the base station.
   D. The incoming carrier goes off the air.

8. The neon lamp on the Quik-Call console at the transmitter is lit; this means:

   A. A message is being received---do not transmit.
   B. Something is wrong with the equipment.
   C. The equipment is ready for voice transmission.
   D. Do not try to talk---Quik-Call tones are being sent.

9. Referring to figure 4 of the lesson, relay K2 fails to energize in a Quik-Call function. The nature of the transmission is,

   A. Only one tone pulse of two tones (the first group).
   B. Two tone groups, the second being continuous.
   C. No tones are transmitted.
   D. Only the second group of tones reach the transmitter.

10. Referring to figure 4 of the lesson, which of the following conditions will exist if relay K3 operates, but fails to release?

    A. Only the first tone pulse will be transmitted.
    B. Both tone pulses will occur simultaneously.
    C. Both tone pulses will occur in the proper sequence.
    D. Both tone pulses will occur, but the second will be continuous.
    E. The transmitter will remain on the air.
    F. Neither of the tones will be transmitted, but the carrier will go on.
    G. The light will remain on.
    H. The db meter will show a continuous reading.
    I. All the chosen tones will be transmitted continuously.

national

MOTOROLA

RADIO COMMUNICATIONS

service

A TWO-WAY RADIO COMMUNICATIONS TRAINING PROGRAM

LESSON MA-3
MAINTENANCE

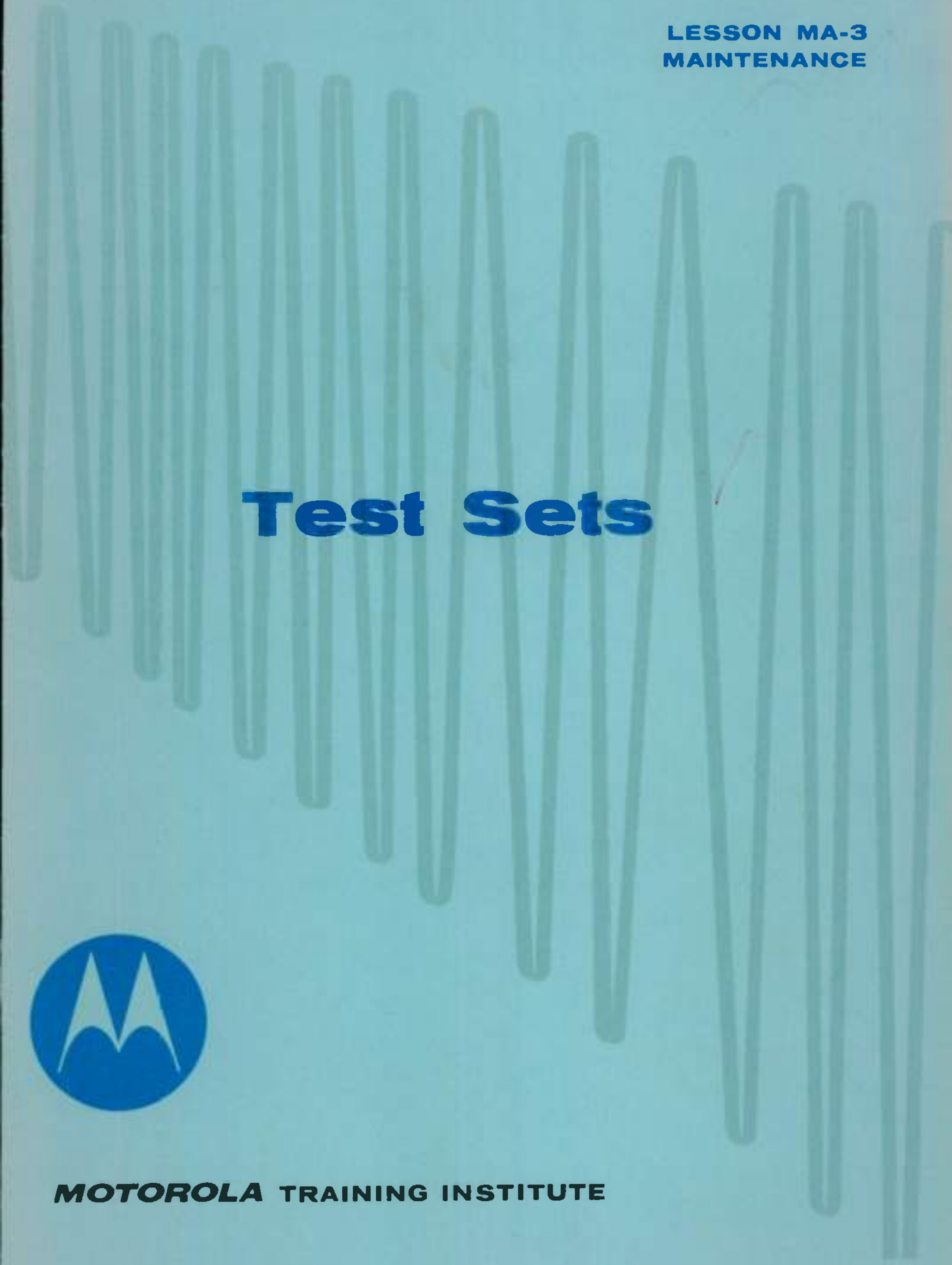

Test Sets

MOTOROLA TRAINING INSTITUTE

A TWO-WAY RADIO COMMUNICATIONS TRAINING PROGRAM

LESSON MA-3
MAINTENANCE

Test Sets

—one of a series of lessons on two-way FM communications—

MOTOROLA TRAINING INSTITUTE
4501 W. AUGUSTA BLVD., CHICAGO 51, ILLINOIS
APPROVED BY THE STATE OF ILLINOIS
DEPT. OF REGISTRATION AND EDUCATION

PREFACE

This is one lesson of a complete Motorola Home-Study Course which presents to the Service Technician both the principles of operation and the maintenance of two-way FM radio systems. The program covers mobile, portable and base station equipment, including the latest transistorized units.

TEST SETS

LESSON MA-3

TABLE OF CONTENTS

NOTICE

Diagrams and figures referenced in text are "fold-outs" in back of each lesson, for use while studying. The Examinations are also there.

The large scale activity in constructing a nation-wide system of tollways, turnpikes and freeways has resulted in many new extensive communications systems. The special police and maintenance forces needed to protect and keep up these new traffic arteries rely heavily on two-way radio.

TEST SETS

Lesson MA-3

Introduction

Motorola has developed two test sets, both designed to provide quick and accurate checks on the various receivers and transmitters used in Motorola two-way communications equipment. These test sets are identified by their model numbers, P-8501 (A or B) and TU-546. The TU-546 is the newer of the two, but the P-8501 provides all the tests necessary for aligning and servicing the equipment. In this lesson we shall make a detailed analysis of the circuits within the test set, circuits which enable the serviceman to make all the necessary transmitter and receiver measurements. Let us begin with the P-8501 unit.

Functions Of The Test Set

The P-8501 Motorola test set provides the following specific functions:

1. It meters the important circuits of the receiver. This is essential both for alignment and for the quick isolation of trouble within a particular section.

2. It meters the important circuits of the transmitter. By "viewing" the various circuits of the transmitter, the operation of each stage may be evaluated. In troubleshooting and in transmitter alignment, this function is essential, providing vital information to the serviceman.

3. It operates as a crystal-controlled signal generator. When equipped with a crystal of the correct frequency, the generator supplies an output which can be used for aligning or peaking the receiver circuits. For the RF circuits, a multiplier stage within the test set supplies the required signal at the channel frequency. For IF alignment, a crystal of the IF frequency is used.

4. It serves as a microammeter. The basic sensitivity of the meter in the test set is 50 microamperes for full-scale deflection. With an internal impedance of 2000 ohms, it takes 0.1 volt to produce full-scale deflection.

5. When used with the Motorola dummy antenna, the test set provides a means of measuring the power output of a transmitter.

6. It serves as a field strength meter. It can be used to measure relative signal strengths radiated from a transmitter antenna.

The Motorola test set is powered by self-contained batteries, and all functions of the unit are regulated by the controls on the front panel. Adapter cables enable the test set to be used with all Motorola equipment. The meter movement is protected by a 1/200 amp. fuse.

Figure 1 shows the front of the P8501 A/B test set. The various switches and controls are identified by numbers, corresponding to those on the schematic diagram (figure 2). Other connections are identified by letters for convenience of reference. The complete schematic diagram may seem complicated, but when the individual circuits corresponding to the various functions of the instrument are considered separately, the analysis can be made with ease. Before studying these

Here We See the Complete Motorola P-8501 Test Set, Including Accessories.

individual circuits, however, let us first examine the various front panel controls.

Function Switch (Grid Current-Meter-Field-Strength)

Designated as S1, this switch may be considered as the function switch. When the switch is in the meter (center) position, the test set can be used for metering the receiver or transmitter. In the GRID CURRENT position (left), the meter is connected so it will measure the oscillator grid current of the signal generator. Thus the meter is used in this position only when the oscillator is to be adjusted. In the FIELD STRENGTH position (right), the test set can be used to measure field strength. The input to the test set is at the PROBE connector (C) for this function.

Rec.-XMTR-0-50 MA Switch

This switch is designated as S4 on the schematic. With the function switch (S1) in the METER position, (as shown in figure 2), switch S4 determines whether the meter is to be used to monitor the receiver, the transmitter, or as a straight 50 ua DC meter.

The Position Switch

Designated S2 on the schematic, this 9-position switch selects the particular receiver or transmitter circuit to be metered. The fifth position is labeled both "PA" and "+4" on the panel. When the test set is being used with a receiver, this position is read as +4; with a transmitter, it is read as PA.

For monitoring either the receiver or the transmitter, the terminals of this switch are connected by means of a cable on the test set to the meter plug, P1. This plug is inserted into either the receiver or the transmitter - - - according to which is being metered.

XMTR. On Switch Microphone Receptacle

This spring-loaded switch is labeled S3 on the schematic. It provides for turning on the transmitter, by means of the test set. Because of the spring loading feature, the transmitter will be on only so long as the switch is held at the ON position. A microphone can be plugged into the mike receptacle (E) on the Test Set and used for the same purpose.

On/Off, Attenuator, Adj., Osc. Tune, XTAL, R.F. Out, and 6-12

These controls and receptacles are grouped together in the above heading because they are concerned with the operation of the signal generator portion of the test set. The ON/OFF switch (S6) connects the internal batteries to the oscillator and multiplier stages. Two crystal sockets (A and B) are provided for connecting frequency-control crystals into the oscillator. The generator output is available at the RF OUT. receptacle (D). The amount of RF voltage at the output is controlled by the ATTENUATOR (R9), which varies the output between maximum and zero. The ADJ. (C2) and OSC. TUNE (L1) controls are used in tuning the generator for correct frequency and maximum output voltage.

Filament voltage from the receiver is available for crystals equipped with heaters. The 6-12 switch (S5) provides for the proper heater voltage at the heater. This switch shorts out a series dropping resistor when 6-volt supply is used. With a higher filament voltage (12 volts), the series resistor reduces the voltage to the proper value at the crystal heater.

Meter Reversing Switch

When the service technician wishes to use the Motorola test set for measuring the circuits within a receiver, he first operates the switches as follows: function switch S1 to METER, switch S4 to REC, meter reversing switch (S7) to "—," its normal setting. The various circuits within the receiver may now be metered according to the setting of the position switch (S2). The meter plug (P1) is then inserted into the receiver receptacle. The leads of the various circuits to be measured are already connected to these terminals, within the receiver.

Metering The Receiver

Figure 3 shows the complete circuitry of the receiver metering function. Metering plug P1, to the right, connects into the receiver chassis, and the various circuits of the receiver are then connected to the meter according to the setting of the position switch, S2. The position switch has two decks or sections, designated A and B.

In position 1 the voltage present at plug terminal 1 is applied through section A of the switch, through function switch S1 (in METER position), through the meter reversing switch S7, through the RF choke (RFC2) and through the fuse to the negative side of the meter movement. The positive side of the meter is returned to ground through RFC1 and the meter reversing switch, the function switch (in METER position), the 17.5K resistor, and section B of the position switch, S2. Thus, in position 1 the meter is connected to measure a voltage which is negative with respect to ground.

Positions 2, 3, -4, 5 and 6 of the switch establish the same circuit through the meter as used for position 1. Therefore, these positions are also used for metering negative voltages.

When the test set is used with a receiver, positions 1, 2, and 3 are usually reserved for measuring negative voltages produced by limiting action. This may be in the limiter grid, or in the grids of the preceding IF stage producing limiting action. Position -4 is used to zero the discriminator transformer secondary. We know from our previous study that the discriminator output may be either positive or negative depending upon the tuned secondary; only when the secondary is tuned to its exact center frequency will the reading be zero. If the output should be positive the meter reading will be downward when the switch is in position -4. Under these conditions the meter reversing switch (S7) may be placed in the (+) setting, or the position switch (S2) may be set at "+4." The +4 circuit is the same as that of -4, except the current goes through the meter in the opposite direction.

Position 5 of the meter is used for adjusting the primary of the discriminator transformer to center frequency. Position 6 is used to meter the grid voltage in the high-frequency oscillator; it thus becomes a means of adjusting the oscillator for maximum activity.

With certain Motorola equipment, exceptions will be found in the application of the various switch positions. This is particularly true with the 450-mc line, where position 3 may be used to measure the high-frequency oscillator grid current, the position switch being used for the multipliers following the oscillator.

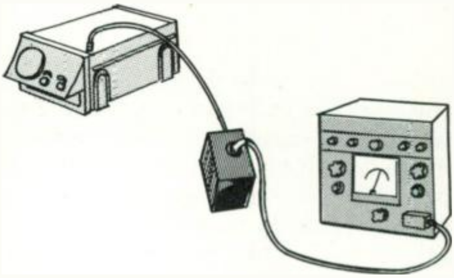

Used With the Motorola Dummy Load, the Test Set Measures Transmitter Power Output.

In 450-mc equipment a number of multipliers are used to produce the desired harmonic, and these multipliers must be tuned. Several additional multiplier readings are thus required, and for some receivers the necessary connections are made to terminals 7 and 8 of the receiver receptacle with meter plug terminals 4 and 5. With the adapter plug in use, the multipliers are thus tuned in positions -4 and 5, respectively. In other receivers, positions -4 and 6 are used to meter the multipliers. (The schematic of adapter plug appears at the bottom of figure 2.)

Position 7 is used with but a few receivers, which make use of this connection for measuring the B supply voltage. The circuit of figure 3 shows a 20-megohm resistor in series with the meter. Thus, the meter is capable of reading B plus voltage in position

7, full-scale deflection representing 1000 volts DC. The scale markings on the meter are multiplied by 20 for the equivalent DC voltage.

With the switch in position 8, the meter indicates the relative amount of noise or audio voltage at the receiver output. The output of the receiver is connected to plug terminals 9 and 10, with terminal 10 leading to ground. For monitoring the receiver output, the audio voltage is applied to a speaker mounted in the tester. The speaker voltage is rectified and applied to the positive side of the meter. This becomes a convenient indication when making 20 db quieting tests, because the meter reads the relative amount of voltage, and 20 db represents a voltage ratio of 10 to 1. Meter readings for the different switch positions can be expected to vary from one model of receiver to another.

The recommended deflection for each switch position will be found in the instruction manual of the particular receiver being used. This information should be known when making tests in order to determine whether or not a particular reading can be regarded as normal.

The instruction manual also indicates the specific circuit which is monitored in each switch position. It is, therefore, essential for the serviceman to equip himself with the appropriate instruction manual whenever he uses the test set in conjunction with a receiver.

Transmitter Metering Circuit

In order to monitor transmitter circuits with the test set, the function switch (S1) is set to the METER position, S4 in its XMTR. position, and the meter reversing switch to (-). The circuit is shown in figure 4.

Positions 1, 2, 3, -4, 5 and 6 have the same circuitry and are used in the same way as they were in the receiver positions---to measure negative voltages. Position 1 is used with 450-mc transmitters to measure the amount of RF power in the transmission line (to the antenna). A crystal RF rectifier is incorporated in the transmitter, and the output voltage from this crystal is applied to the meter in position 1.

Position 2 is used (only in certain transmitters) to measure the amount of current in the oscillator stage. This makes it possible to adjust the oscillator for maximum activity, where this is necessary for the type of oscillator circuit employed. Positions 3, -4, 5 and 6 measure the grid current in the multiplier stages of the transmitter and they are used in tuning the plate circuits of preceding stages.

The P. A. position measures the plate current of the final amplifier stage of the transmitter. The plate current enters at terminal 8 of P1 and reaches the negative terminal of the meter, the positive side of the meter being returned to terminal 7, which is connected to the high-voltage circuit of the transmitter. Thus, the plate current of the power amplifier stage may be read in the P. A. position. A suitable shunt resistor is incorporated in the transmitter for proper meter indication. The multiplying factor for the meter reading is given in the instruction manual; it varies for transmitters of high and low power output.

Position 7 is used to measure the high voltage of the transmitter. The 20-megohm resistor provides a full-scale deflection of 1000 volts. Thus, the scale reading on the meter is multiplied by 20 to determine the high voltage.

Position 8 indicates the relay voltage which, in mobile applications, is the A supply to the filaments and relays. This voltage, made available at terminal 9 of the meter plug and at terminal 3 of the microphone receptacle, is applied to the meter through the 280 K multiplier resistor. An upward deflection indicates that the input voltage is positive, which means that the vehicle has the negative side of its primary voltage grounded. (If the positive battery terminal is grounded, the meter reverse switch must be used.)

In position 8, the meter becomes a voltmeter with a full-scale deflection of 15 volts. Thus the scale readings must be multiplied by .3 to determine the applied voltage. For example, a reading of 21 on the meter dial corresponds to 6.3 volts. The reading with the switch at position 8 always represents the voltage which is applied before the transmitter is operated. As soon as the transmitter is turned on, the test set indicates zero voltage with the switch at position 8. The line being measured is the "bottom" end of the relay, the control line for turning on the transmitter. In order to energize the transmit relay this line is grounded, either by the switch on the test set or by the one on the microphone.

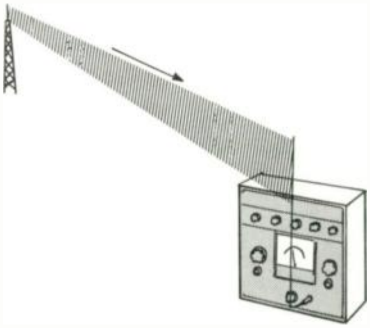

The Motorola Test Sets May be Used to Measure the Field Strength of a Radiated Wave.

The microphone and audio output voltages are not measured by the P-8501 test set, but these voltages are available at terminal 10 of the meter plug and at the microphone receptacle, respectively. A microphone at the test set can thus be used to modulate the transmitter.

Signal Generator

Figure 5 shows the circuit of the signal generator. This unit consists of a crystal controlled oscillator followed by a multiplier. In addition to serving as a source of voltage at the IF frequencies of any Motorola receiver, the unit can also be used as an RF source for any receiver in the HI or LO bands. All that is required is the proper crystal.

By using the crystal from the transmitter, the combination of oscillator-multiplier provides an output at the channel frequency. Also, by using crystals of 440, 455 and 470 kc (assuming a 455 kc IF with a 15 kc deviation), it is possible to check the response of the discriminator in the receiver.

The series mode type of crystal used in some Motorola equipment will not operate properly in the test set. In some cases, in order to use the test set it will be necessary to secure a suitable fundamental mode crystal of the correct frequency.

The relatively high output of the test set, due to its multiplier stage, makes it suitable for alignment of both the RF and the IF sections of the receiver. For RF alignment, the output of the generator, available at the R.F. Out connector (D), is applied directly to the receiver antenna input by means of the cable which is supplied. The output is variable from maximum to zero by means of the attenuator (R9), which controls the screen voltage of both the oscillator and the multiplier.

Two tuning controls, ADJ. and OSC TUNE, are provided in the oscillator-multiplier section. At the low IF frequencies only the ADJ control is used---the other has no effect on either the frequency or the output. The function switch is placed in the GRID CURRENT position and the ADJ control is operated to obtain a maximum meter reading. This provides maximum output at the IF crystal frequency.

To obtain proper results at the higher frequencies, both controls must be used; the ADJ control becomes the means of placing the crystal on the correct frequency, and the OSC. TUNE is used to provide maximum output from the the multiplier. The output is best determined by monitoring the limiter in the receiver; the frequency should be "zeroed" to some discriminator known to be correctly tuned. For higher frequency operation, some small change of frequency may result when the ATTENUATOR or OSC. TUNE controls are varied. The frequency should be rechecked periodically to make sure the oscillator is always at the correct frequency.

The crystal heater obtains its operating voltage from the filament supply of the receiver, through terminal 8 of the meter plug. A resistor in this supply

The TU546 Test Set with Complete Accessories.

line is switched in or out of the circuit depending upon whether the receiver operates from a 6- or a 12-volt system.

The generator section of the test set operates from self-contained batteries, which supply 1.5 and 67.5 volts, respectively. The ON/OFF switch (S6) is used to connect these batteries to the generator circuits.

(For bench operation, an AC supply such as that shown in figure 6 may be built to save the batteries. The switch allows quick changes between AC and battery operation. The AC supply uses standard parts, all of which may be secured from most electronic supply houses. The components necessary for the construction of this AC supply can easily be mounted on a small chassis which may be installed inside the test set cabinet.)

Microammeter, RF Power and Dummy Load

To use the 0-50 microammeter alone, (1) the function switch is placed in the METER position, (2) position switch S4 is placed in the 0-50 position, and (3) the position switch is placed in the -4 position. The input to the meter is taken from 4 and 11 of the meter plug. The plug fits into an adapter which has connections to terminals 4 and 11, terminal 11 being the ground. This adapter terminates in a jack, which in turn fits into the Motorola dummy antenna, P-7208. The meter circuit, adapter, and dummy antenna load are shown in figure 7.

The TU546P Test Set Includes a Peaking Generator, Located on the Upper Panel.

Figure 7 shows how to determine the transmitter power output from the amount of current indicated on the meter. The power output in terms of current is also a function of the frequency; hence three curves are shown, one for each frequency range. For example; a reading of 30 microamperes in the 152-174 mc range corresponds to a power of 25 watts. Note, also, that the dummy load has a maximum continuous power rating of but 25 watts; for ratings higher than this, operation of the dummy must not exceed 5 seconds duration. If the resistors in the dummy load heat the rectifier crystal (also inside the dummy load), the current will change, resulting in an erroneous reading on the meter.[1]

Field Strength Meter

Figure 8 shows the circuitry of the test set when used as a field strength meter. All that is required is to set the function switch S1 in the FIELD STRENGTH position. This disables all switches and controls except the meter reversing switch. RF energy is introduced into the circuit through the PROBE input connector (C), and the rectifier converts it to an equivalent DC, which is then applied to the meter circuit.

No effort has been made to calibrate the readings on the meter in terms of uv/m (microvolts per meter), due to the several variables involved, which would make such calibration impractical. Moreover, a relative field strength reading is all that is desired by the average serviceman. Although there is no means of calibrating or determining the frequency of the signal being picked up by the meter, it is a means of indicating maximum output from the transmitter antenna. It is also very useful in loading the transmitter for maximum output.[2]

It takes .1 volt DC for full-scale deflection and .002 volt DC for a deflection of one dial division. The meter therefore cannot be used at any great distance from the trans-

---

1. See Test Methods, page 3-23.
2. See Test Methods, pages 1-5, 3-36, and 3-37.

mitter. By providing readings at various distances from the transmitting antenna, however, the field strength meter becomes a valuable instrument for detecting "dead spots."

The TU-546 Test Set

The TU-546 test set, besides performing all the functions of the P-8501 unit, has these additional advantages: No adapters are needed in order to measure the oscillator multipliers in 450-mc receivers; for checking microphone voltage, both the DC supply and the AC output can be measured; the set permits a zero-center discriminator scale reading; it incorporates a transistorized signal generator, having a range from 280 kc to 13 mc and there is provision in the test set for three separate crystals; the internal batteries may be checked by merely placing a switch in the correct position; a fully transistorized AC voltmeter is provided for measuring small AC voltages.

Provision is also made to use the test set with a "peaking generator," which can serve as an RF signal source for receivers up to 960 mc. This peaking generator is an accessory and may be included in the original test set or added afterwards.

Figure 9 is the basic schematic diagram of this test set. A cable shown at the left interconnects the test set with the receiver or transmitter, whichever is being tested. The function switch is normally placed at either RCVR or XMTR, whichever applies. The third position (ACCESS) of this switch disconnects the meter from the internal circuits. The meter movement is then available at the meter jack. In figure 9, the function switch terminals are indicated by the letters X(XMTR), R(RCVR), and A(ACCES).

The meter movement is not fused as in the P-8501 tester; instead, two silicon diodes in parallel with the movement perform the same function and make fuse replacement unnecessary in case of an overload. The meter is connected to the position switch (S1) through the meter reversing switch and the function switch.

Let us now inspect the circuitry of this test set at each position of Switch S1, for both the receiver and the transmitter. We will start with the receiver.

Receiver Measurements

With the set plugged into the receiver and the function switch in RCVR position, the position selector switch may be used to monitor many of the receiver circuits. In positions 1 through 6, the test set is capable of measuring grid currents in the various receiver stages. The negative side of the meter connects through terminals 1 through 6 of switch S1A to the various grid circuits which are to be measured. The positive side of the meter connects to ground in positions 1 through 6 (through the meter reversing switch, the function switch, and switch S1B). In series with this ground path we find a 17.5K resistor, the same as used in the P-8501 tester. This ground lead completes its path to the receiver through terminal 11 of the plug.

Although position 4 has the same general circuitry as positions 1, 2, 3, 5 and 6, this position is used to measure the secondary of the discriminator, which is a "zero" reading. To facilitate the meter deflection to both sides of zero, a special circuit is added to switch position 4 which places the normal position of the needle at the center of the meter scale. Special scale markings have a zero-center scale reading with graduations from zero in both directions.

Zero-center needle deflection in position 4 is obtained by means of a separate battery source and series connected resistors, which limit the current to 25 microamps (center-scale deflection). This circuit is shown to the right of the meter in figure 9. Switch S1D completes this circuit when the switch is in position 4, but the function switch must also be in its RCVR position. The 1.5-volt battery is now in series with a fixed resistor and a variable resistor, and the needle can be brought to exact center-scale deflection by adjusting the variable resistor. In any other position of the switch, the zero-center circuit is inoperative.

Positions 7 and 8 of the meter, (labeled PA and PO), are not normally used for receiver measurements except in the case of 450-mc receivers. With these receivers, the multiplier switch is placed in the MULT position, the meter now indicating the grid current for the circuits (the oscillator multipliers) terminating at plug terminals 7 and 8. By means of a spring-return arrangement, the switch will never be left in the MULT position except when making this specific measurement. As soon as the readings are completed the switch is returned to the 2 VAC position.

Position 11 provides for audio output measurements. The receiver audio terminates at plug connection 9, and with the function switch at RCVR, the audio is applied to the input of the AC voltmeter section. In parallel with this input (when the function switch is at RCVR), we find the speaker switch. This switch terminates the audio line into either a 3-ohm dummy load, a 3-ohm speaker, or a 27-ohm resistor in series with the speaker (which is effectively an "open" to the audio line).

The two stage amplifier (transistorized) terminates in a rectifier circuit in order to produce a reading on the meter. In position 11 the meter is connected across the ends of this rectifier circuit. With the AC Meter switch in the 2-volt position, a 2-volt input causes full-scale deflection. In the 0.2-V position, a 0.2-volt

AC input will cause full-scale deflection. Thus, the meter indicates the output voltage from the receiver.

Transmitter Readings

When the test set is connected to the transmitter and the function switch placed in the XMTR position, a microphone may be plugged into the microphone receptacle, and either the mike switch or the switch on the test set may be used to place the transmitter in operation. The following readings may then be taken:

In positions 1 through 6 the meter indicates grid current, the same as for the receiver. Terminals 1 through 6 of the plug terminate at terminals 1 through 6 of switch S1A and, the circuit is completed through the meter to ground with only the 17.5K resistor in series.

Position 8, which is marked PO, is used only for determining the power output of 450-mc transmitters. A portion of the output power from the final tank is coupled through a rectifier to terminal 1 of the interconnecting plugs. Terminals 1 and 8 of switch S1A are interconnected through the function switch and the multiplier switch. So power output measurements of 450-mc transmitters can be made at either position. Position 8 is handier, however, since it is located next to position 7 (PA).

Position 7 is used to determine the plate current of the final stage. The circuit for this measurement is identical to that of the P-8501 test set. The meter and its series-connected 17.5K resistor are connected in parallel with the meter shunt resistor (in the plate supply lead to the final amplifier). The B supply lead and the plate side of the resistor are connected to plug terminals 7 and 8, respectively. The exact amount of plate current (the multiplication factor of the meter) is determined by the resistance of the shunt in the transmitter; the instruction manual must be consulted for the exact value of plate current for each transmitter.

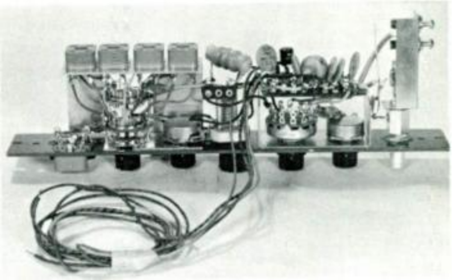

Here We See the Transistorized Peaking Generator Which is a Part of the TU546P Test Set.

In position 9 the meter indicates the plate supply voltage applied to the final stage of the transmitter. B plus is available at pin 7 of the plug connector and a 20-megohm resistor is connected in series with the meter to allow a 1000-volt DC full scale reading. This resistor is located between the B plus input at terminal 7 and terminal 9 of S1B. The circuit through the meter is completed to ground through terminal 9 of switch S1A.

In position 10 the meter indicates the A supply voltage applied to the relays. If the relays operate from a battery supply, this reading represents the battery voltage. Terminal 10 of S1A is grounded and the positive side of the meter connects to terminal 10 of S1B. By means of 300K series-connected resistor at this terminal, the meter will read 15 volts, full scale, useful for both 6- and 12-volt systems. This A voltage is available at terminal 9 of the plug connector but the circuit to the meter is completed only when the function switch is in the XMTR position (dotted lines).

In position 11 the meter indicates the audio output from the microphone. The audio component of the mike voltage (available at terminal 1 of the mike connector) is applied to the input of the amplifier and the meter is connected across the output of the amplifier, the circuit being the same as for the audio output of the receiver. With the function switch in the XMTR position, however, the speaker switch is no longer in parallel with the amplifier input. The microphone may be that of the transmitter or it may be one plugged into the test set. In either case, normal voice modulation causes a reading of about 0.25 volt on the meter, assuming a higher voltage output type of microphone. For lower voltage microphones the reading will average 0.18 volt. For this test the transmitter must be placed in operation or there will be no microphone DC supply voltage.

Position 12 of the switch is used to measure the microphone DC supply. The path between terminal 10 of the plug connector and terminal 1 of the microphone receptacle is completed through a 600 K resistor to terminal 12 of S1A, through the meter, and to ground at terminal 12 of switch S1B. The 600 K resistor is used for a full-scale reading of 30 volts, which is adequate for the microphone supply.

Position 13 is used to obtain an immediate check on the condition of the internal battery of the test set.

Position 14 is used to measure the relative amount of RF output of the internal crystal oscillator. A small coupling capacitor feeds the oscillator output to a voltage doubling rectifier circuit and results in a relative reading on the meter. Position 14 is also used when the test set operates as a field strength meter. The output of the pick-up antenna is connected to the RF connector. With the switch in position 14, the meter indicates the RF level.

The Crystal Oscillator

The transistorized crystal-controlled oscillator, shown at the lower right of figure 9, operates at any frequency between 280 kc and 13 mc. The principal purpose of this oscillator section is to provide a signal at the various IF frequencies for receiver alignment. Three internal crystal sockets are provided, selection being made by means of the switch on the front panel. The oscillator uses "AQL" type crystals for frequencies up to 800 kc and "ANL" type crystals above 800 kc. These are both anti-resonant crystals (appearing as a parallel tuned circuit to the oscillator).

Position 14 is used for automatically monitoring the output of the oscillator, giving a relative indication of crystal activity. This is particularly useful in checking the activity of unknown crystals. Due to the differences of frequency ranges and cuts of crystals, however, and due to the limited supply voltage to the oscillator, the failure of a crystal to operate is no proof that the crystal is defective.

Peaking Generator

The transistorized RF peaking generator provides a high order of harmonics of the fundamental 6-10 mc crystal oscillator frequency, and serves as a signal source for the low band (25-54 mc), the high band (144-174 mc), the 450-470 mc band and the 890-960 mc band. If not originally included with the test set, this generator may be added later as an accessory item.

The peaking generator makes use of an "AUL," anti-resonant type of crystal. In some instances the crystal from the transmitter oscillator will operate satisfactorily; if not, crystals may be purchased at low cost for any channel of operation. A frequency adjustment is provided for placing the generator on exact channel frequency, and an output attenuator provides the desired amount of RF signal for the receiver.

STUDENT NOTES

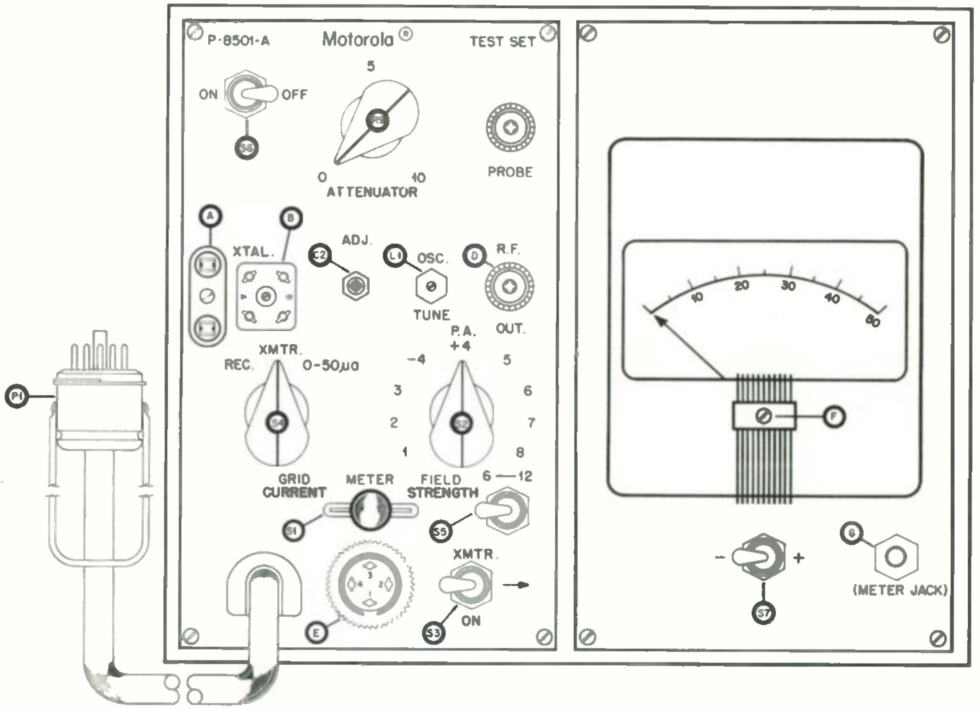

FIGURE 1

STUDENT NOTES

STUDENT NOTES

STUDENT NOTES

FIGURE 1 is on the back of this page

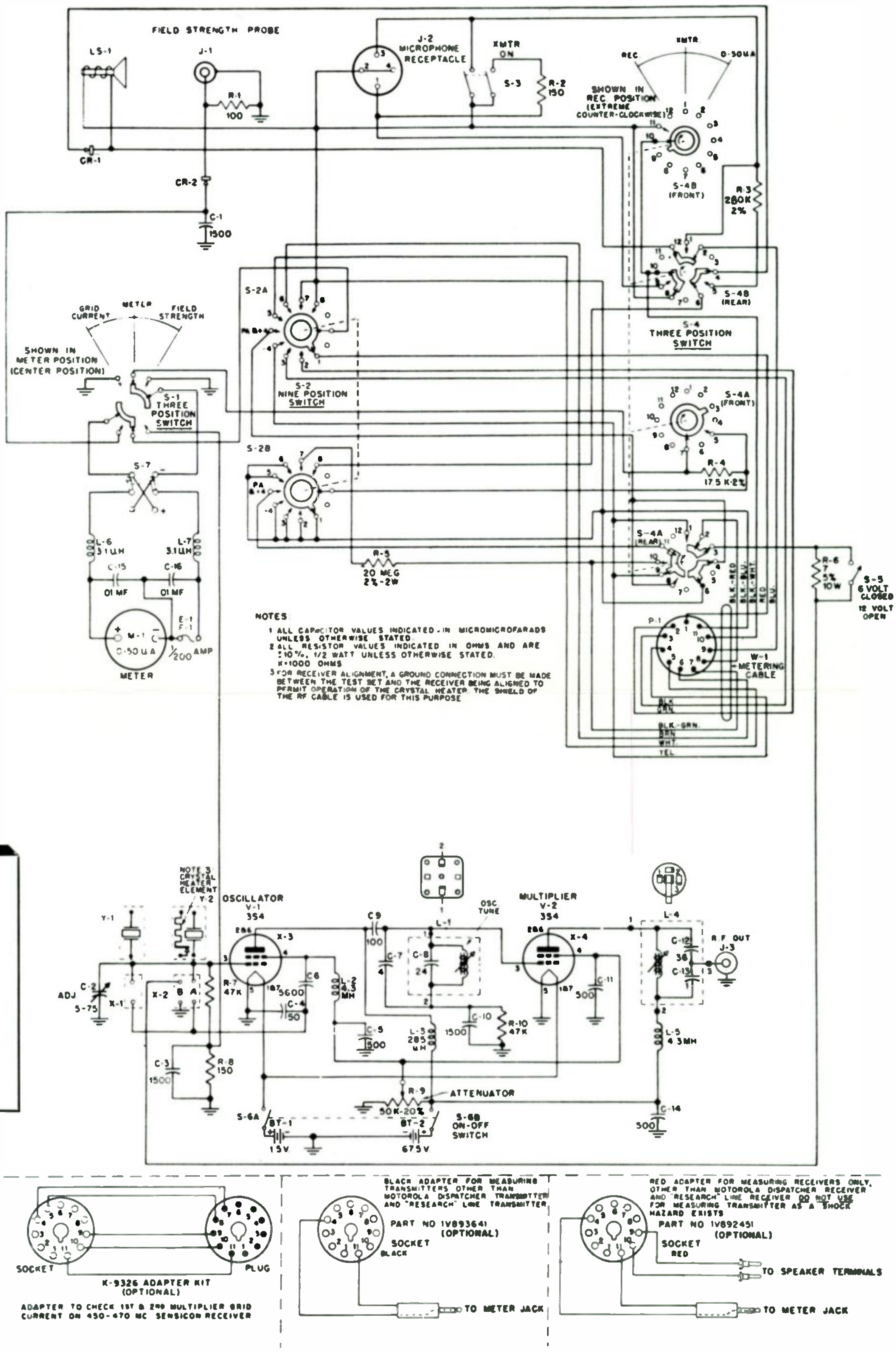

NOTES

1. ALL CAPACITOR VALUES INDICATED IN MICROMICROFARADS UNLESS OTHERWISE STATED.
2. ALL RESISTOR VALUES INDICATED IN OHMS AND ARE ±10%, 1/2 WATT UNLESS OTHERWISE STATED. K=1000 OHMS
3. FOR RECEIVER ALIGNMENT, A GROUND CONNECTION MUST BE MADE BETWEEN THE TEST SET AND THE RECEIVER BEING ALIGNED TO PERMIT OPERATION OF THE CRYSTAL HEATER. THE SHIELD OF THE RF CABLE IS USED FOR THIS PURPOSE

ADAPTER TO CHECK 1ST & 2ND MULTIPLIER GRID CURRENT ON 450-470 MC SENSICON RECEIVER

BLACK ADAPTER FOR MEASURING TRANSMITTERS OTHER THAN MOTOROLA DISPATCHER TRANSMITTER AND "RESEARCH" LINE TRANSMITTER

RED ADAPTER FOR MEASURING RECEIVERS ONLY, OTHER THAN MOTOROLA DISPATCHER RECEIVER AND "RESEARCH" LINE RECEIVER. DO NOT USE FOR MEASURING TRANSMITTER AS A SHOCK HAZARD EXISTS

OPTIONAL ACCESSORY ITEMS

FIGURE 2

MODEL P-8501-B TEST SET
SCHEMATIC DIAGRAM

STUDENT NOTES

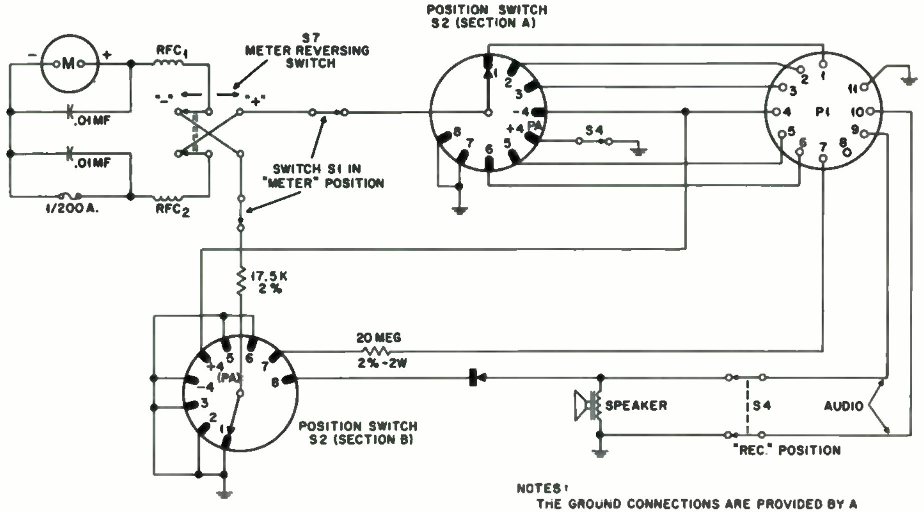

NOTES:
THE GROUND CONNECTIONS ARE PROVIDED BY A COMMON CONNECTION TO TERMINAL 11 OF P1, WHICH IS GROUNDED THROUGH THE RECEIVER CHASSIS.

SWITCH S4 IN "REC." POSITION.

P-8501-B TEST SET--RECEIVER METERING CIRCUIT
FIGURE 3

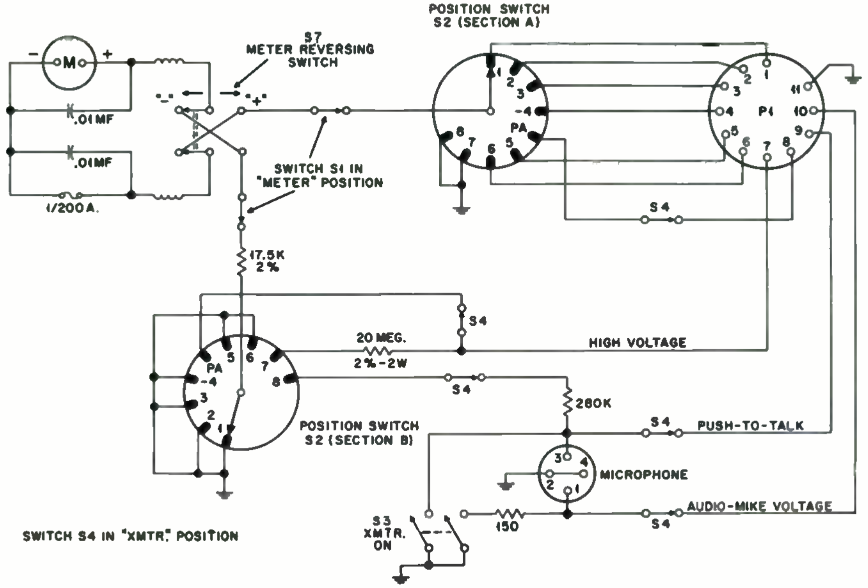

SWITCH S4 IN "XMTR." POSITION

P-8501-B TEST SET--SIMPLIFIED DIAGRAM OF TRANSMITTER METERING CIRCUIT
FIGURE 4

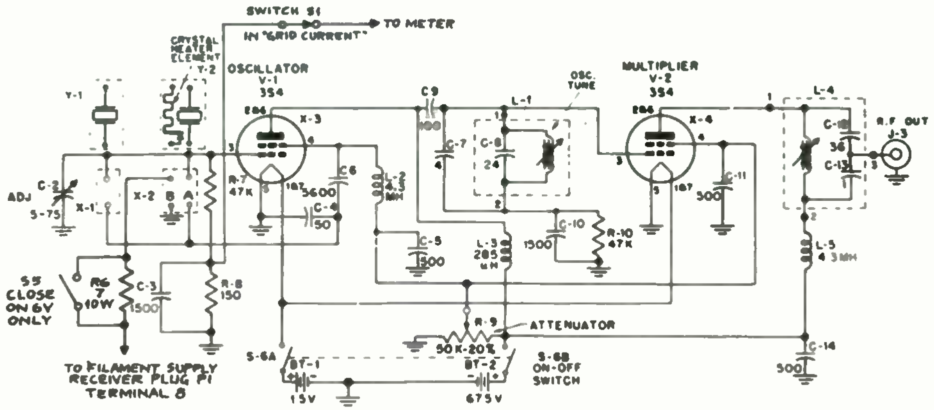

TEST OSCILLATOR OF
MOTOROLA P-8501-B
TEST SET

FIGURE 5

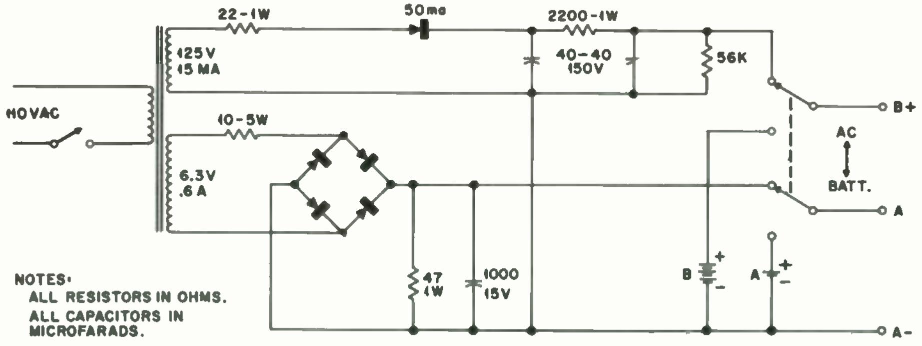

NOTES:
ALL RESISTORS IN OHMS.
ALL CAPACITORS IN MICROFARADS.

AC POWER SUPPLY
FIGURE 6

STUDENT NOTES

STUDENT NOTES

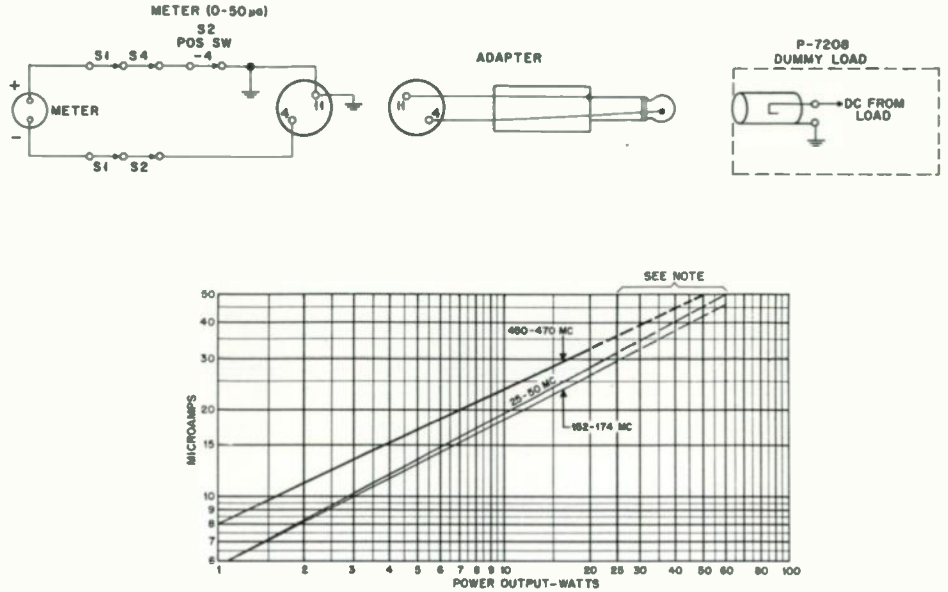

NOTE:
LOAD RATED AT 25 WATTS CONTINUOUS DUTY AND
UP TO 60 WATTS FOR SHORT PERIODS (5 SECS. MAX.).

FIGURE 7

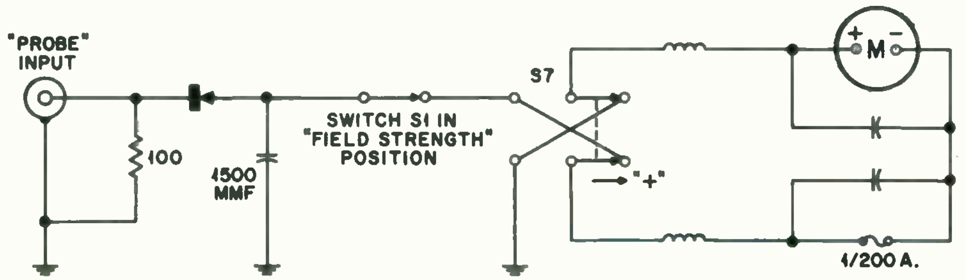

NOTES:

SWITCH S1 IN "FIELD STRENGTH" POSITION

METER REVERSING SWITCH S7 IN "+" POSITION

"FIELD STRENGTH" CIRCUIT OF P-8501-B MOTOROLA TEST SET

FIGURE 8

STUDENT NOTES

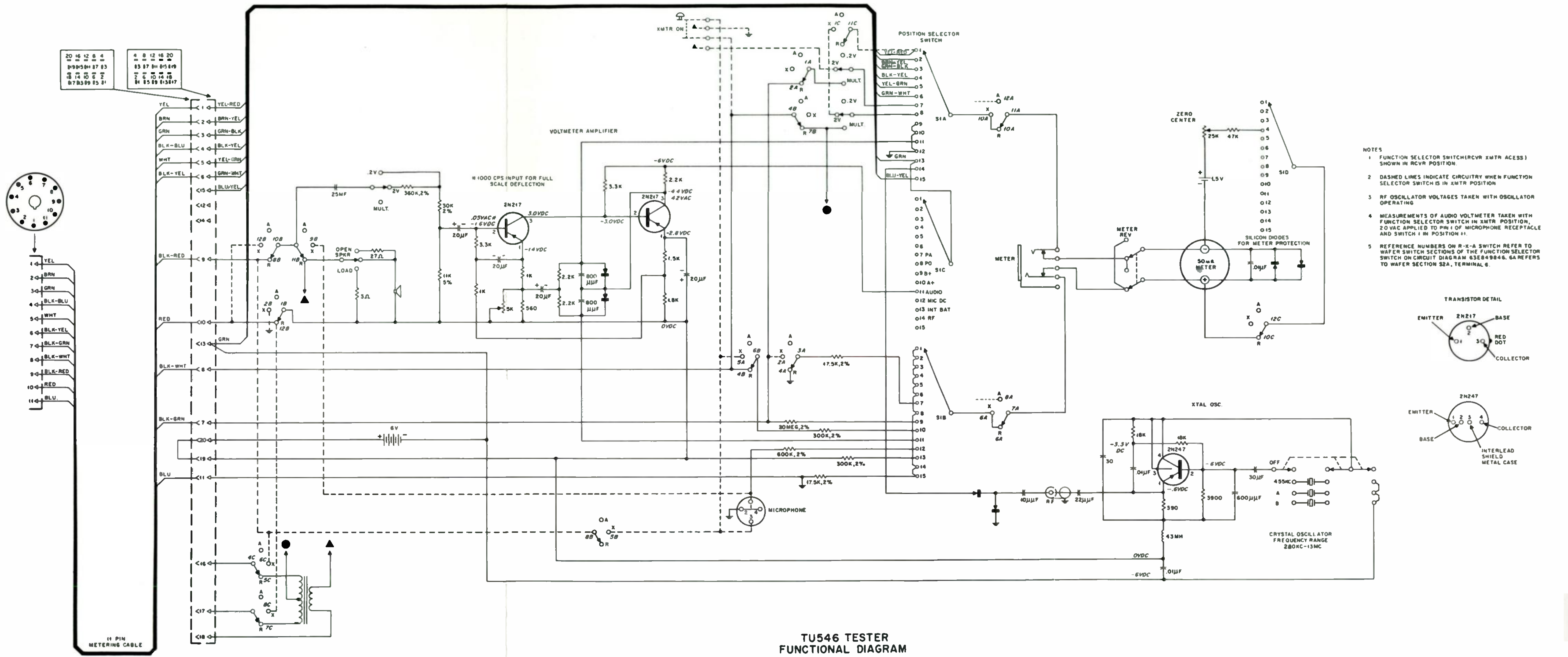

NOTES

1 FUNCTION SELECTOR SWITCH(RCVR XMTR ACESS) SHOWN IN RCVR POSITION.

2 DASHED LINES INDICATE CIRCUITRY WHEN FUNCTION SELECTOR SWITCH IS IN XMTR POSITION

3 RF OSCILLATOR VOLTAGES TAKEN WITH OSCILLATOR OPERATING

4 MEASUREMENTS OF AUDIO VOLTMETER TAKEN WITH FUNCTION SELECTOR SWITCH IN XMTR POSITION, 2.0 VAC APPLIED TO PIN 1 OF MICROPHONE RECEPTACLE AND SWITCH 1 IN POSITION 11.

5 REFERENCE NUMBERS ON R-X-A SWITCH REFER TO WAFER SWITCH SECTIONS OF THE FUNCTION SELECTOR SWITCH ON CIRCUIT DIAGRAM 63E849846. 6A REFERS TO WAFER SECTION S2A, TERMINAL 6.

TU546 TESTER
FUNCTIONAL DIAGRAM
FIGURE 9

Motorola Training Institute

4501 West Augusta Blvd., Chicago 51, Ill.

Please PRINT or use STAMP

Name	____________			Student No.	______
Street	____________	Zone	____	Date	______
City	____________	State	________	Grade	______

EXAMINATION LESSON MA-3

1. The Motorola test sets are essentially low-current measuring devices when used in positions 1 through 6. How then is it possible to measure grid voltage in the receiver or transmitter?

   ____

   ____

2. In position 4, either + or -, the P-8501 test set plugged into the receiver indicates ____________

   ____

3. A serviceman wishes to tune the primary of a discriminator transformer. The correct meter position is 1________, 2________, 3________, 4________, 5________, 6________, 8________.

4. The P-8501 test set is plugged into a high-band receiver and the switch is at position 6. The meter indication is caused by grid voltage in the ____________ stage.

5. The P-8501 test set is plugged into a transmitter, and in position 7 the meter deflection is half of full scale. This indicates (be specific): ____________

   ____

6. When plugged into a transmitter, the test set in position 8 indicates ____________

   ____

7. In making a particular reading on the test set, the meter deflection is down-scale instead of normal. This can be corrected by ____________

   ____

8. Referring to figure 7 of the lesson, a transmitter operating at 155 mc produces a reading of 30 microamperes at the test set when used with the Motorola dummy load. The power output is ________ watts.

9. Which of the following functions are provided by the TU546 test set?

   A. Measures transmitter B plus. ____________
   B. Measures transmitter A plus. ____________
   C. Measures the receiver output voltage. ____________
   D. Measures transmitter deviation. ____________
   E. Measures both DC and AC at the microphone. ____________
   F. Measures the transmitter frequency. ____________
   G. Checks the internal batteries. ____________

10. In the TU546 tester, the meter movement is protected by (a low-current fuse)(two diodes)(the meter reversing switch).


national
MOTOROLA
RADIO COMMUNICATIONS
service

A TWO-WAY RADIO COMMUNICATIONS TRAINING PROGRAM

LESSON MA-4
MAINTENANCE

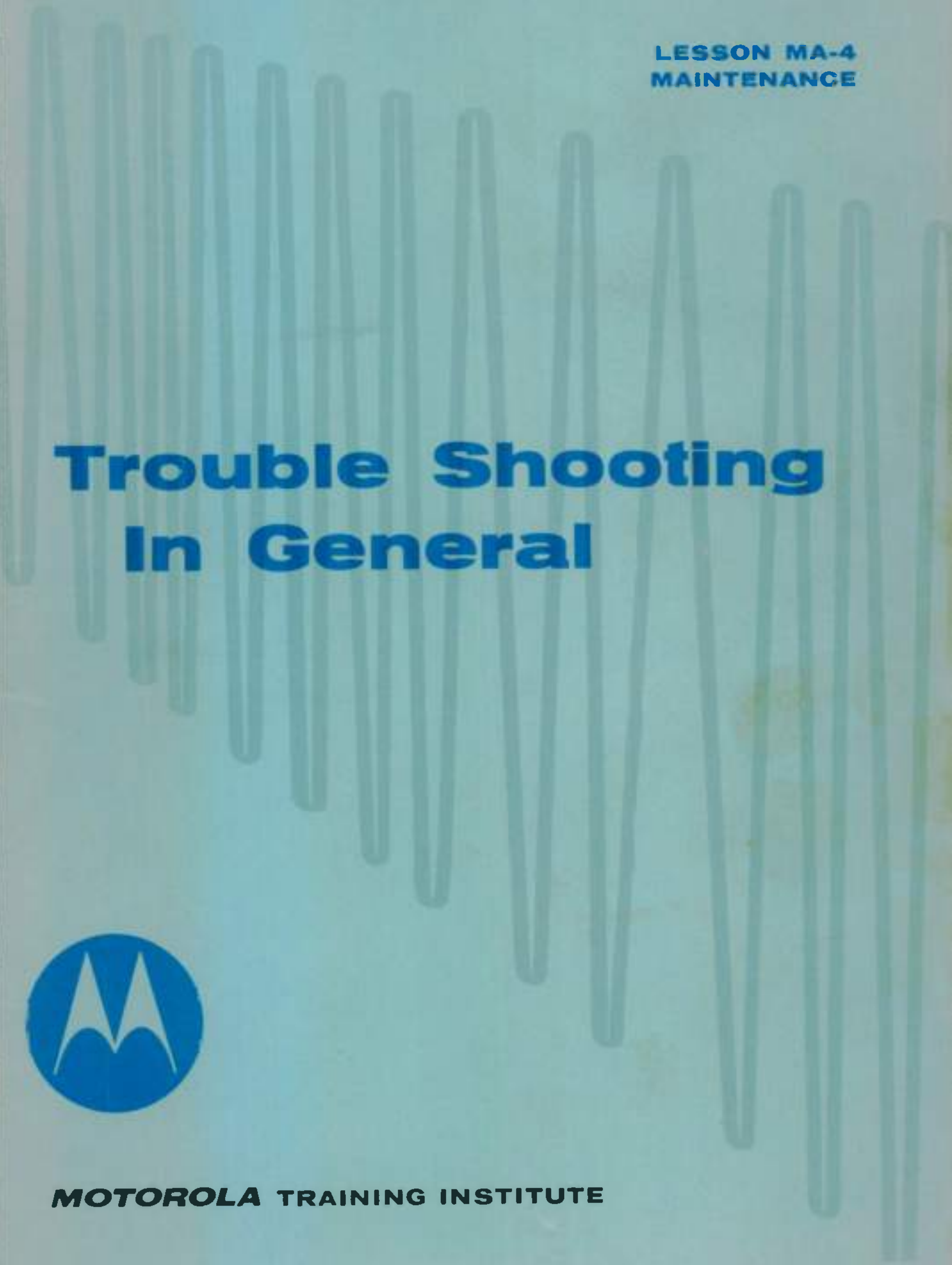

Trouble Shooting In General

MOTOROLA TRAINING INSTITUTE

A TWO-WAY RADIO COMMUNICATIONS TRAINING PROGRAM

LESSON MA-4
MAINTENANCE

Trouble Shooting In General

—one of a series of lessons on two-way FM communications—

MOTOROLA TRAINING INSTITUTE
4501 W. AUGUSTA BLVD., CHICAGO 51, ILLINOIS
APPROVED BY THE STATE OF ILLINOIS
DEPT. OF REGISTRATION AND EDUCATION

PREFACE

This is one lesson of a complete Motorola Home-Study Course which presents to the Service Technician both the principles of operation and the maintenance of two-way FM radio systems. The program covers mobile, portable and base station equipment, including the latest transistorized units.

GENERAL TROUBLE SHOOTING

LESSON MA-4

TABLE OF CONTENTS

NOTICE

Diagrams and figures referenced in text are "fold-outs" in back of each lesson, for use while studying. The Examinations are also there.

In the event of disaster, radio invariably remains as a reliable method of communications. Civil Defense organizations throughout the country have established extensive two-way radio networks in preparation for all emergencies.

GENERAL TROUBLE SHOOTING

Lesson MA-4

Introduction

It should be remembered that trouble shooting is but one phase of equipment maintenance. Trouble shooting assumes that some piece of equipment in the communications system has already become faulty so that normal contact is not possible or is not reliable.

In addition to trouble shooting, there must be preventive maintenance of electronic equipment. This includes general inspection, equipment tests, and certain required frequency and deviation checks.

In this assignment we will be concerned only with that phase of maintenance which might be classified as "emergency" maintenance, wherein a system or some portion of a system is not functioning properly and must be placed in operation "as soon as possible." We will be concerned here with general procedures only; specific instructions for trouble shooting the receiver and transmitter will be given in the assignments which follow.

General Procedure

The complete trouble shooting procedure may involve as many as six steps to make certain that proper corrective measures have been taken, and that the system has been restored to normal operation. In certain instances, the nature of the trouble may simplify these steps or even eliminate one or more of them. This will be determined by the circumstances of each situation.

The first step is to determine where the fault lies. For example, a police squad car pulls up to your shop and the operator complains that his rig is dead. A check of the system may show that the transmitter is okay (the base station hears the squad car signals). However, the squad car operator does not hear the base. This indicates either (1) a faulty receiver in the squad car, or (2) a faulty transmitter at the base. By opening the squelch, a quick check may be made on the receiver. If no noise is heard, the fault is probably in the receiver; if normal noise is heard, the trouble could still be in the receiver, but it might also be at the base transmitter. If there are other squad cars in the system, a check on the operation between the base and one of the other cars will immediately isolate the trouble.

The important fact to be recognized is that the trouble must be definitely isolated to some particular unit of the system before any one unit is subjected to a detailed analysis.

Assume that the receiver is at fault. Without removing the receiver from its case, a Motorola test set may be used to make a general check of the unit. Again it is possible that the trouble might not be in the receiver, but in the power supply. In some models, the transmitter and receiver operate from different sections of the supply, or even from different supplies.

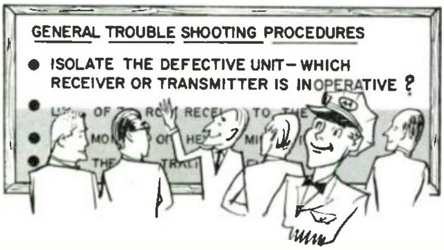

Make Complete Checks on the Operation of the Entire System.

After the fault is definitely isolated to a particular unit, the next problem is to determine which stage or section within the unit is at fault.

The next step is to find the defective component (or perhaps the control or circuit that is misadjusted). This may consist only in replacing one or more tubes, or it might require the removal of the chassis for further inspection on the test bench. In the latter case, additional test instruments (voltmeter, ohmmeter, signal generator) are usually required in order to determine the exact trouble.

After a fault has been discovered, determine the proper corrective measures. If a poor connection or broken wire is found, the procedure is obvious enough. Where a component is defective, the problem is one of correct replacement. More will be said about this later.

After the trouble is corrected, the individual unit is checked for operation (correct meter readings, sensitivity, power output, etc.). It is then placed in the car and its operation with the rest of the system is verified.

Isolating the Defective Unit

In any trouble shooting procedure, considerable time will be saved by quickly isolating the defective unit. Knowledge of the normal operation of the entire system will furnish the technician with a definite idea of the possible cause of trouble. Thus, in order to provide intelligent service, the technician must be familiar with the operational characteristics of the system.

In a typical two-way communications system the base station, as the dispatcher, controls the traffic of the mobile units. In order to have communication between vehicles, the same frequency is used for all the transmitters and receivers in the system. The mobile vehicles, let us assume, do not normally operate in extreme fringe areas but are close to the base station---the signal is thus normally stronger than necessary, and there is plenty of system "reserve."

These vehicles, however, may occasionally enter areas where communications from car-to-car is not 100% reliable. This may be due to foliage, high buildings, or other obstacles. Let us further assume that the serviceman makes a routine check each month of each transmitter and receiver, and that he regularly corrects all malfunctions such as low power output in the transmitters or poor sensitivity in the receivers.

Let us now suppose that car No. 1 comes to your shop and the operator complains that, although he is able to hear the base station, he cannot "talk back." This situation is the same everywhere, even in good areas, which eliminates the possibility that the car might have been in a "dead spot." Investigation shows that the base station has normal in-and-out traffic with the other mobiles; hence, the trouble is not in the base station receiver. The fault seems to be with the mobile transmitter in car No. 1. This is confirmed by the operator of car No. 2, who states that once, when car No. 2 was about a block away from car No. 1, the operator of car No. 2 heard car No. 1 trying to talk to the base. As soon as car No. 2 was farther away from car No. 1, the signal died out. We can be reasonably sure now that the output of the transmitter is very low. The Motorola test set may be used for further checks on the operation of the unit.

As another example, let us assume the same general complaint from car No. 1---no contact from the car to the base. The other cars report, however, that they hear car No. 1. Moreover, the other cars have been experiencing the same trouble---they can't talk back to the base. The trouble now seems to be associated with the base station receiver.

In both these examples the basic complaint was the same --- no contact from car No. 1 to the base. In the first instance, additional information indicated that the trouble would be found in the transmitter at car No. 1. In the second instance, however, the trouble seemed to be at the base receiver. This illustrates the importance of making a complete check of the operation of the entire system before deciding that any particular unit is defective.

The solution of many problems is not always so obvious. It is then necessary to make further checks before the trouble can be isolated to a particular unit. Or, the trouble may be due to poor operation of several units---the transmitter power may be weak and at the same time the sensitivity of one of the receivers may be poor.

General Check of Individual Units

Where the symptoms are inconclusive and the fault cannot be directly assigned to one unit within the system, it may be necessary to make an over-all check of all the suspected units.

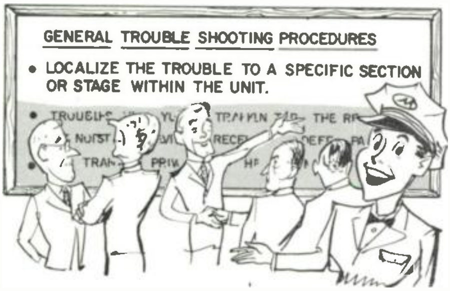

The Test Set is Helpful in Localizing a Fault Within the Unit.

Where a system has some reserve, the output of a transmitter may gradually decrease without causing any particular trouble. This reserve is desirable, for it obviates the necessity of servicing the system every time one unit becomes a little weak. Where the output of a base transmitter has decreased and, at the same time, the sensitivity of one or more mobile receivers has also decreased, normal contact may no longer be possible. In such cases, the obvious answer is to restore all units to their normal operating condition. The transmitter as well as the receiver (s) should be returned to normal power output and full sensitivity, respectively.

For trouble shooting the transmitter, a Motorola test set and wattmeter are among the most useful test instruments. By indicating the power output, the wattmeter gives an immediate check of the over-all operation. If the output is low, the test set will indicate which stage is not up to par, and further checks may then be made. If the power output seems to be normal, the operating frequency may be checked, provided another receiver in the system can be monitored. With the switch on the Motorola test set placed in position 4 of the receiver, the reading will then indicate whether or not the incoming signal is "on channel." This reading is normally zero. If the transmitter is off frequency, a frequency meter should be used to correct the condition.

The power output of the transmitter may be measured by means of a thru-line wattmeter, either with a dummy load or with the antenna system connected. This unit shows the amount of power traveling each way in the transmission line and gives a good indication of how much of the power going to the antenna is actually being radiated into space. Unless the reflected power is very low in comparison to the forward power, the poor operation of a system may be attributed to the antenna or transmission line.

In order to make a quick check of the receiver, it is important to have a Motorola test set and an RF source of the correct frequency. Using this test set, meter reading at positions 1 and 2 will indicate the operation of the front-end of the receiver; position 6 (in most receivers) can be used to check oscillator activity. These readings are taken with no signal applied. With a signal of the correct frequency applied, the discriminator secondary (position 4) should read zero. These readings, together with the noise heard when the receiver squelch is open, can be used as a general check of receiver operation. If the operation seems to be normal, a signal generator can be used to determine the receiver sensitivity. The generator used for this purpose must have an accurate calibration of its output voltage.

The output of the transmitter power supply can be measured by means of the test set. Low supply voltages can well be the cause of low power output from the transmitter or low sensitivity at the receiver. In addition, the possibility of a weak battery in the vehicle must also be considered, for this will result in a low supply voltage both to the receiver and to the transmitter. Power supplies should never be overlooked when trouble shooting individual units.

Locating The Defective Part

Having determined the defective portion of the unit, the technician is now faced with the problem of finding which particular component within the complete unit is the source of trouble. He knows the particular stage or section which is at fault--he must now determine which component is defective. The experienced serviceman knows that most troubles are due to defective tubes, so his first procedure is to substitute new tubes for those which might be causing trouble. At the same time, the test set is plugged into the unit and the effect of tube substitution upon the various readings is noted. If a new tube does not restore normal operation, the next step will vary according to the nature of the fault and according to whether the unit is a receiver or a transmitter.

When working on a transmitter, the serviceman starts with the oscillator and proceeds through each successive stage until the exact location of the trouble is determined. Each stage is checked by means of the nearest meter position. Watching these readings, he adjusts each circuit until the proper peak indication is obtained when tuned through resonance; it may also be necessary to check the neutralization and the coupling in some units. This procedure should definitely pinpoint the defective stage.

If the tube is good and the tuned circuits seem to show normal peaks, it may be necessary to take voltage and resistance readings. As a final step, the serviceman should try substituting parts in the suspected stage. This procedure is not infallible, of course, and the test may prove inconclusive, but by following a logical procedure the defective part will eventually be located.

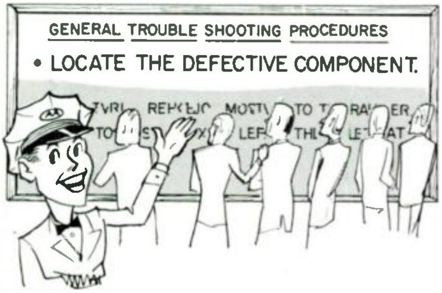

Voltage and Resistance Tests Usually Provide this Answer.

When working on a receiver, the procedure may be somewhat different, because there is no input to the receiver except from a transmitter or signal generator. Again, the procedure may vary according to the symptoms found in the preliminary checks. A signal generator can be used for stage-by-stage sensitivity checks and this is one method of definitely isolating the fault to a particular stage. These checks are made by adjusting the tuned circuits to resonance and noting the peak indications. When the trouble is isolated to a particular section of the receiver but not to a specific stage, it may become necessary to take voltage and resistance readings. The exact procedure will be governed by the symptoms.

Where the antenna system is the source of trouble, the problem may be simplified because of the limited number of parts. If the antenna is on a high tower, however, the service procedure may be difficult. The previously mentioned thru-line wattmeter may prove a very helpful instrument for determining whether the trouble is in the antenna or in the transmission line. A comparison of the forward and reflected power measured both at the beginning and at the end of the transmission line (if convenient) will usually show which is at fault, the antenna or the line.

Parts Replacement

We have now reached the point where the serviceman must replace a defective part with a good one. There are a number of components within the equipment with ratings which are not considered critical (a bypass capacitor can often be made larger without changing the operation of the unit). In most cases, however, the serviceman must observe the exact value and rating of the part being replaced. Wherever possible, the new part should be identical to the old one, and secured from the manufacturer of the original part. If this is impossible, the replacement should at least have an identical rating. For example, the wattage rating of a resistor must be the same or higher than that of the original. If the part is a capacitor, the voltage rating must be the same or higher. There are many other important factors in connection with replacement parts besides wattage and breakdown voltage. If a resistor has a 5% tolerance, for example, the new unit should also be within 5% of the indicated resistance. If the defective capacitor has certain ratings with regard to temperature and capacitance, the replacement must have the same ratings.

It is important when making replacements to position the new part in the exact same location as the original, and to be careful that the wiring is not disturbed. This is most important, of course, in the front end of the receiver. A coupling capacitor in the RF stage to the mixer, for example, may cause oscillation unless it is positioned close to the chassis.

Before replacing a defective part, the actual cause of the defect should itself be removed. In many instances a bypass capacitor may have shorted, causing a resistor to burn out. The short in the capacitor may easily go unnoticed while the burned out resistor is found at once by visual inspection. If the shorted capacitor is left in the chassis when the resistor is replaced, the new resistor will also burn out.

Recheck and System Testing

After a unit has been repaired, its operation should be checked and, if possible, it should also be bench-tested for some period of time to make sure that it will continue to operate.

After the unit has been thus tested for normal operation, it can be installed in the vehicle and a complete check made on its operation within the system. It is most important that the receiver or transmitter be "netted" with the rest of the system.

This concludes our discussion of general trouble shooting procedures.[1] The use of most trouble-shooting instruments can be explained more specifically, of course, when included in a more complete analysis of the receiver or transmitter. The following assignments on receiver and transmitter servicing will contain this information. The voltmeter and ohmmeter can be discussed at this time, however, and the remainder of the assignment will be devoted to explaining the use of these instruments. First, however, it is well to point out that we need not know the internal circuitry of either of these instruments. It is far more important to know how to use them intelligently.

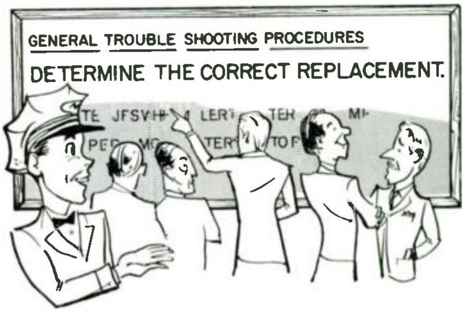

Get Replacement Parts From the Manufacturer Whenever Possible.

---

[1] See Test Methods, section 1, pages 1-2 and section 3, pages 1-5.

Using the Voltmeter

The voltmeter is an arrangement of resistors and a meter (sometimes vacuum tube controlled for greater sensitivity) which indicates the voltage or difference of potential existing between two points of a circuit. Because the voltmeter does not have an internal source of voltage, the equipment being measured must be "ON" when voltage tests are being made. The meter is connected in parallel with the particular portion of the circuit being tested. Thus, the circuit being measured is not broken, nor is anything disconnected for this test.

It must be remembered that the meter is a resistor as far as the circuit being tested is concerned, and when the meter is connected we are actually placing a resistor across the circuit. In most circuits, the high resistance of the VTVM (vacuum-tube voltmeter) does not noticeably affect the circuit operation. In certain circuits, however, the presence of the meter does change the circuit operation and it is not impossible for a "dead" receiver to start operating when the meter is connected for a voltage check! We are now ready to look further into the use of the voltmeter in testing procedures.

Figure 1 shows the circuit of the last IF amplifier stage and the first limiter stage in a typical communications receiver. We are assuming that the signal is lost at the grid of the limiter - - - there is no meter indication at this grid. Tube replacements have failed to restore operation, and the receiver has been brought to the test bench for repair.

The voltmeter tells us that the B supply voltage, between B plus and ground is normal. A further check at points C and D, however, shows no voltage present. A check at point E is also zero with respect to ground. The logical conclusion is that resistor R3 is open. The resistor may be replaced, of course, but additional tests are necessary to make sure that some other defect in the circuit is not causing the resistor to burn out. Suppose that when the resistor is replaced and the power turned on, the replacement unit also quickly overheats.

Several procedures are now possible. With the power off, an ohmmeter can be connected between point E and ground. Zero resistance would mean that C4 is probably shorted, or there could be a short between plate and cathode of the tube. (The tube can be removed to determine if it is defective.) A wire may have become shorted by rubbing against some sharp point, or a tie-point may be shorted in some manner. These shorts can be located by a visual inspection of the parts and wiring.

If operation seems to be normal after the resistor is replaced and there seems to be no reason for the burning out, we must look elsewhere for a logical explanation. The tube might have been intermittently shorted; this could burn out a resistor. If this seems to be the only explanation, it might be well to replace the tube, for there is a good chance that the tube may short again in the future.

While making the original voltage checks on the circuit of figure 1, if the voltmeter had been placed across the terminals of resistor R3, there is a good chance that the receiver would have started to operate, although the output would have been below normal. This would be because the resistance of the meter, being substituted for R3, completed the path from B plus to the plate and screen circuits of the tube. Even though the resistance may be many times higher than the normal circuit value, the circuit will still operate sufficiently to allow some signal to get through the receiver. When nonelectronic meters having low sensitivity are used, the low-voltage scale may actually restore normal operation when the meter is placed across the resistor terminals.

Here is another problem in connection with the circuit of figure 1. Let us suppose that the receiver is inoperative and that the trouble has been pinpointed to the IF stage--- the tube apparently is not conducting. This possibility seems to be confirmed by the voltage readings; screen and plate voltage readings are taken at points C and D, respectively, and these readings are just a little higher than the recommended values, but the meter reads zero at the grid of the tube.

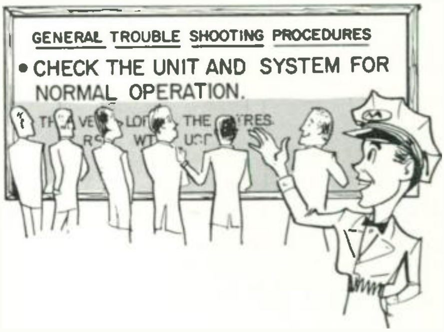

The Final Proof of any Repair is by Reestablishing Normal System Operation.

The tube is replaced, but the readings remain unchanged! Further voltage checks are taken with the voltmeter placed between plate and cathode. The reading is zero. Obviously the cathode circuit is at fault, and the specific trouble would seem to be an open cathode resistor. There can be no plate current if the cathode resistor is open, and an open cathode would also explain the zero reading previously obtained at the grid, for there should be some grid current even if there were no plate voltage, provided the cathode circuit is intact.

The voltmeter is now connected directly across the cathode resistor. If the cathode is open, this will have the effect of substituting the high resistance of the voltmeter for that of the cathode resistor. Even with this high resistance there should be some plate current, since cathode bias alone cannot entirely cut off plate current. Again our suspicions are confirmed; the receiver now operates, although the output is below normal. As a further quick check, the cathode may be momentarily shorted to ground.

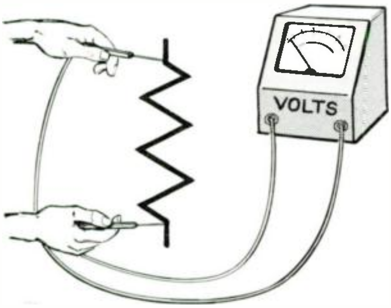

Voltage Measurements are Always Made by Placing the Voltmeter in Parallel with the Unit Being Tested.

Our diagnosis can now be verified by turning off the power and placing an ohmmeter directly across the cathode resistor, between point A and ground. The open resistor should be immediately evident.

The tube should be removed from its socket when making this ohmmeter test, or it should be allowed to cool off, at least; otherwise, if the tube is still warm, care must be taken to connect the positive lead (internal battery) of the ohmmeter to the cathode. If the ohmmeter connections are reversed (and if the tube is still hot), the tube will conduct grid current through the meter, which might lead to the conclusion that there is resistance in the circuit even though the cathode is actually open.

Tips On Using the Voltmeter

The first thing to remember when using a voltmeter is that this instrument is always placed in parallel with some portion of an operating circuit in order to determine the voltage drop at that portion of the circuit. When making DC voltage measurements, the meter polarity must always be observed. The positive test prod of the meter is placed at the point nearest the positive side of the source; the negative test prod is placed at the point of the circuit nearest the negative terminal of the source.

Unless the supply voltage is known, it is always best to start at a high scale on the voltmeter. If the reading is too low, the meter may then be switched to a lower scale. If the highest voltage in a unit is about 200 volts (as in a receiver), it is not necessary to start at the 1000-volt scale; the 300 volt range is high enough.

When a VTVM is used, it is permissible to switch to the scale which provides the most readable meter deflection. A low sensitivity meter, however, will readily upset the operation of some circuits in many cases, actually changing the circuit voltages while the meter is connected. This meter will have the least effect upon the circuit when the higher ranges are used. On the ten-volt range, for example, a meter may offer as little as 10,000 ohms of internal resistance.

When making voltage tests, the entire circuit operation must be studied and understood if the meter readings are to be intelligently interpreted. Perhaps we can best illustrate this by an example. Figure 2 shows the circuit of a typical voltage amplifier --- actually, the noise amplifier circuit of a particular Motorola receiver. A VTVM shows about 200 volts for the B supply, which is normal. The recorded plate voltage (plate to ground) is nearly 200 volts, and the screen voltage is about 100 volts. The cathode voltage (between cathode and ground) is considerably higher than normal, and there is no voltage reading at all between plate and cathode, nor between screen and cathode. This indicates that the tube is not conducting.

The voltmeter indicates zero volts across R6, but 100 volts across R5. The tube might be nonconductive, but there is a greater probability that the cathode circuit may be open, since you will remember that the voltage between both screen and plate (with respect to the cathode) was zero. This indicates an open cathode circuit rather than a bad tube. A further check results in obtaining a voltage reading across R3 in the cathode circuit, but not across R2. The zero voltage across R2 means that the cathode circuit (not R2) is open. The reading across R3 indicates that R3 is open, the circuit now having been completed by the meter! By replacing R3, the circuit is restored to normal.

This analysis may be more easily understood if we consider the complete plate circuit of figure 2 independently, as shown in figure 3. The tube can be regarded as a resistor, and it is shown as Rt. There are thus four series "resistors" between B plus and ground. Let us assume that one of these resistors (R3) is open. The circuit is incomplete and there is no current through any of the resistors. Also, since there can be no voltage across the resistors, the circuit is still incomplete even when the meter is placed across either R6, Rt, or R2, and the voltage reading must still be zero. When placed across R3, however, the meter completes the circuit and records a voltage. This is exactly what happened in the analysis above, the reading across R3 indicating an open resistor.

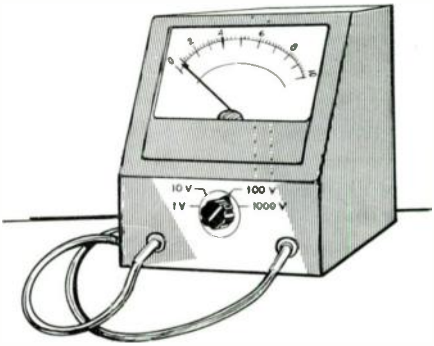

The Highest Meter Range Giving a Readable Deflection Provides the Most Accurate Voltage Readings.

A question may arise in connection with the 100 volts originally recorded at the screen when the tube was not conducting. If there was no current through the tube, you might ask, why is there a voltage drop across the screen resistor? An examination of figure 3 will show that resistors R4 and R5 form a voltage divider between B plus and ground. This will result in a lower potential at the screen, independent of screen current. This will be further decreased when the screen draws current through R5, due to the increased voltage drop across R5.[2]

AC Voltmeter

The AC voltmeter must be used when measuring AC voltages. The AC voltmeter is similar to the DC voltmeter, as far as the foregoing instructions are concerned, but no consideration need be given to the polarity of the AC test leads. Any AC measurements made by the serviceman are almost exclusively of the low-frequency type, and in this discussion we will be concerned only with such AC measurements.

While other types of AC meters are available, most of those used by the serviceman include a rectifier which changes the AC to a comparable DC and then indicates the amount of DC on the meter. Some use an amplifier stage or two to give the meter greater sensitivity.

The meter may respond to either the peak, the RMS or the average value of AC, although in most cases the meter indicates the RMS value. In using his meter, the technician should know whether the reading corresponds to the RMS (effective) or to the peak value. The dial of the meter is usually marked according to what is recorded.

Resistance Testing

An ohmmeter is essentially a source of voltage (a battery) in combination with a meter and various current limiting resistors. It is used to determine whether a particular component or circuit will conduct DC. Knowing the current through the part or circuit being measured, and with a fixed voltage source which is also known, the resistance can be read directly from the calibrated scale of the meter.

Because the ohmmeter contains its own source of voltage, there must be no other voltage used in connection with the equipment being measured. Furthermore, sensitive meters and other low-current devices must be removed before applying the ohmmeter. While this latter precaution is seldom necessary in two-way equipment, the power must always be removed, and all large capacitors discharged. Large capacitors, particularly electrolytics may retain a charge long after the power has been turned off. If such capacitors are allowed to discharge through the ohmmeter, the meter movement may be damaged.

When using the ohmmeter to analyze circuits or components, it is particularly necessary to take the entire circuit into consideration.

---

[2] See Test Methods, section 2, pages 5-11.

An ever recurring problem when using the ohmmeter is the existence of DC paths in parallel with the component or circuit being measured.

The circuit of figure 4, showing the second limiter and last audio output stage of a Motorola receiver, is an example.

Finding that the voltages of the second limiter are not correct, and suspecting the existence of trouble in the grid circuit, the serviceman makes a quick resistance check between grid and ground. The meter shows that there is a conductive path. This information alone is not sufficient, however, for grid resistor R1 may be open; the reading may be due to the circuit in parallel with R1, composed of R4 and R5. Now, the grid-ground reading should be approximately 100 k, the value of the grid resistor. The parallel path through R4 and R5, however, has a resistance of 2.5 meg. If R1 is open there is still a complete grid path for DC, it is true, but the extremely high resistance of this "parallel path" may impair the operation of the receiver; it may easily be the cause of the incorrect voltage readings. This illustrates the importance of checking a circuit or component for the correct amount of resistance as well as for an open or short.

Another problem involving the ohmmeter can be illustrated before leaving figure 5. Let us suppose that the receiver is "dead," that is, nothing is heard in the speaker. Let us also suppose that unsquelching the receiver and turning the volume full on doesn't help. Meter readings are taken on the test set and they indicate that the trouble is possibly in the audio stage (although there still is no sound from the speaker, the voltage checks are all normal for the audio output stage). The final deduction is that the output transformer secondary is open.

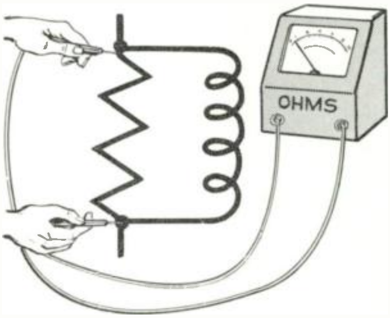

Parallel Paths Within a Circuit Often Give Erroneous Resistance Readings.

The power is turned off, and we prepare to check the continuity with the ohmmeter. Note, however, that the speaker is in parallel with the transformer secondary. Placing the ohmmeter across the secondary terminals of the transformer would be meaningless in this case. It would still be difficult to know which unit was at fault. While the resistance value of the two units in parallel is lower than that of either unit alone, this resistance is so low that it would be impossible to know which one was open. The only logical procedure in a case like this is to disconnect one of the wires leading to the speaker and then check the two parts separately.[3]

Measuring Leakage In Capacitors

A problem often encountered when trouble shooting communications equipment involves the isolation of capacitors which are not shorted, but are merely "leaky." The defective capacitor, not readily located by a resistance check, may have developed a leakage resistance in the order of one megohm, for example. In many instances, DC voltage changes will occur in the circuits at each side of the leaky capacitor. As a result, the overall operation of the entire unit becomes unsatisfactory.

A leaky capacitor can sometimes be identified by measuring the voltages at each side of the unit. The capacitor in figure 5A may be used to couple any of the audio stages, or it may be used between stages in the IF section. The plate load of the first tube may consist of a resistor (as in figure 5A) or it may be a tuned tank. Some stages may have a large value of resistance, while others may have less than 100,000 ohms--even a few ohms where only a tuned circuit is used. In any case, the change in the voltage at the grid of the next stage is important, because of the change of bias which results. An example will show how this affects the meter readings of the stage.

Let us suppose that the coupling capacitor of figure 5A has a leakage of about 5 megohms, and that the grid resistor (R2) is about 50,000 ohms (47K actually). The leaky capacitor (Rc) thus completes a series circuit between B plus and ground, as shown in figure 5B. The voltage will divide, in this circuit, according to the resistance of the three series resistors. Most of the voltage drop will be across Rc which has 100 times the resistance of R2 and there will be but a few volts across R2 and R1. Thus, a meter placed across R2 will read only a few volts at most, and this may be disregarded as a major source of trouble. Perhaps the leaky capacitor may not be causing much trouble at this particular moment, but there is a strong probability that the leakage will gradually increase to a point where the operation of the equipment is seriously affected. It is thus important to recognize this leakage and replace the unit at once.

In many circuits the signal applied to the grid of the stage produces enough grid-leak bias to make the grid negative with respect to ground, and this leaky capacitor may not be detected; while the leaky capacitor permits the application of some positive voltage from the plate circuit of the preceding stage to the grid, the latter shows a negative voltage due to the large grid-leak bias. By removing the second tube, however, the positive voltage will be readily disclosed. With the tube removed, the grid cannot

---

[3] See Test Methods, section 2, pages 12 and 13.

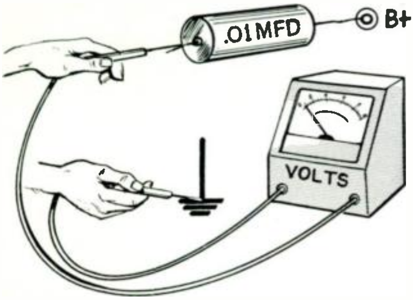

A Voltmeter in Series With a Capacitor and Connected Between B+ and Ground Gives a Reliable Check for Leaky Capacitors.

draw current and the negative bias is thus removed.

A more conclusive check can be made by disconnecting the grid side of the capacitor from the grid and placing the meter between the loose end of the capacitor and ground. The circuit is shown in figure 5C, where R2 has been replaced by a meter; if the meter is a VTVM, this resistance will now be about 10 or 11 megohms. Most of the resistance of the series circuit is now represented by the meter, and the voltage drop will be greatest across the VTVM.

It is possible that when the meter leads are first connected, the capacitor will be charged by the B+ supply; in this case the meter will show a sharp initial deflection which decreases as the capacitor approaches its full charge. If the VTVM returns to zero voltage (measured on a low-voltage scale), the capacitor is not defective. If the meter has a continuous voltage reading, however, the capacitor is leaky and should be replaced. When making a test of this kind, a high-voltage scale should be used at first so that the initial charging of the capacitor does not damage the meter movement. As the amount of deflection decreases, the meter may be returned to a lower range.

The voltmeter may thus be used to check the relative ability of a capacitor to charge, giving a relative indication of the capacitance itself. The deflection of a given meter is directly dependent on (1) the amount of supply voltage and (2) the capacitance of the unit being checked. Small capacitors, about .001 ufd and lower, do not cause an appreciable amount of initial meter deflection.[4]

---

[4] See Test Methods, section 2, pages 19-25.

STUDENT NOTES

STUDENT NOTES

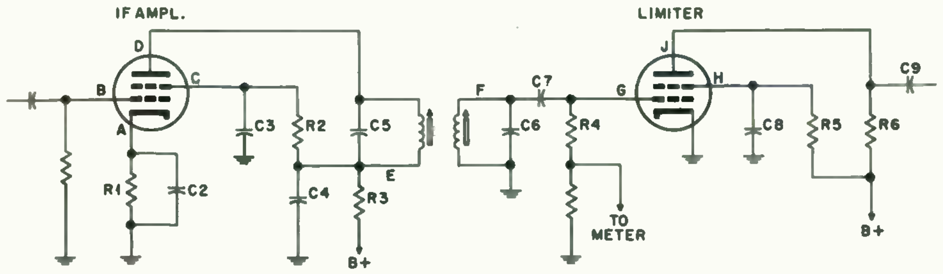

FIGURE 1

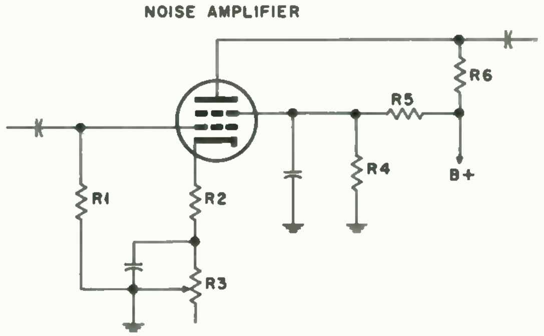

FIGURE 2

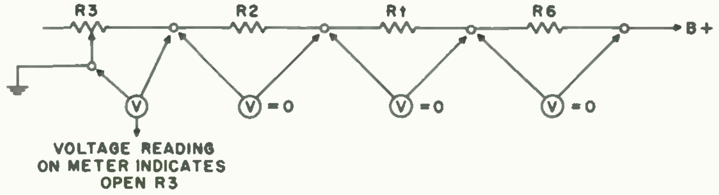

FIGURE 3

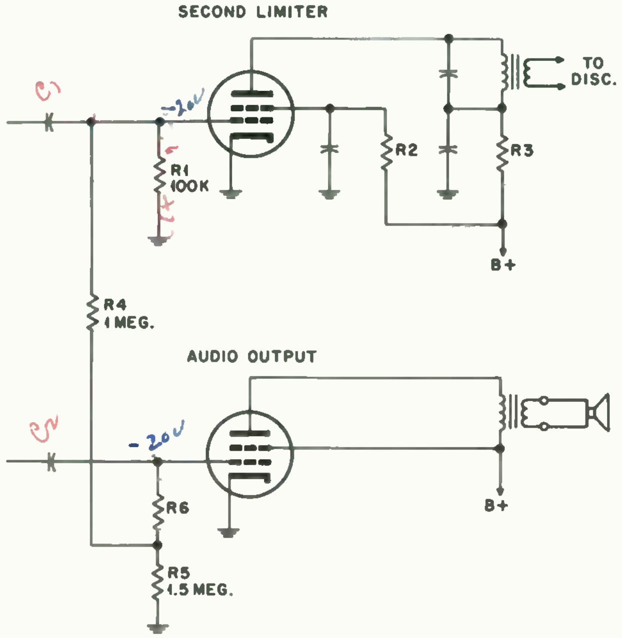

FIGURE 4

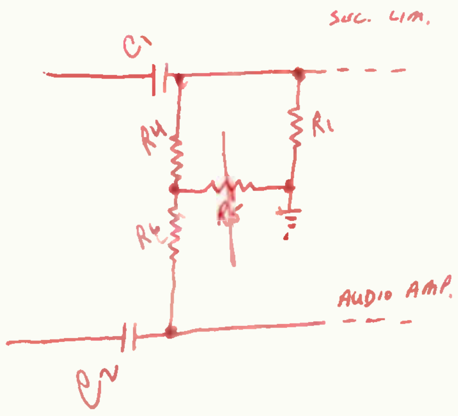

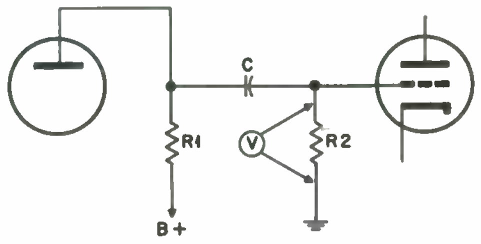

FIGURE 5A

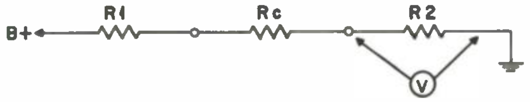

FIGURE 5B

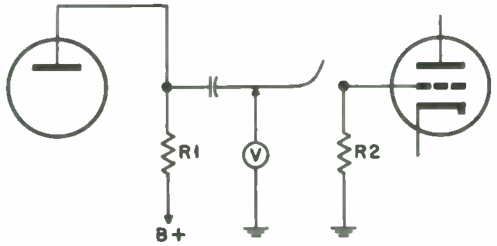

FIGURE 5C

Motorola Training Institute

4501 West Augusta Blvd., Chicago 51, Ill.

Please PRINT or use STAMP

Name ______________________________ **Student No.** ______

Street __________________ **Zone** ____ **Date** ______

City _______________ **State** ________ **Grade** ______

EXAMINATION LESSON MA-4

1. In a two-way communications system consisting of a base station and 10 mobile units all operating on the same frequency, car number 4 suddenly develops trouble; car number 4 does not hear any of the other units, nor do the other mobiles or the base station receive any signals from car 4. The most likely sources of trouble are:

   A. The number 4 receiver is defective. ______
   B. The number 4 transmitter is defective. ______
   C. The antenna or the transmission line in car 4 is defective. ______
   D. The power supply in car 4 is bad. ______
   E. Nothing is wrong with car 4; the other receivers and transmitters are probably off frequency. ______

2. A resistor in a transmitter is found to be defective and a correct factory replacement is substituted. The equipment should now be reinstalled, after which it will be ready for use.

   TRUE ______ FALSE ______

3. Any trouble-shooting procedure must always begin with a system analysis, to determine the nature of the trouble and the specific chassis or unit which is defective.

   TRUE ______ FALSE ______

4. After the trouble in a system has been localized, the next step is to pin point the fault to some particular portion of the defective unit. This is best done by:

   A. Using the test set. TRUE ______ FALSE ______
   B. Measuring resistance. TRUE ______ FALSE ______
   C. Measuring the power output of a transmitter. TRUE ______ FALSE ______
   D. Checking the receiver sensitivity. TRUE ______ FALSE ______

5. In selecting a replacement resistor, the three most important factors to consider are: (1) ______ (2) ______ (3) ______

6. In selecting a replacement capacitor, three important factors are: (1) ______ (2) ______ (3) ______

7. In using a vacuum-tube voltmeter to trouble shoot a receiver or transmitter, the power supply is (left on)(turned off). The voltmeter is connected (in series with)(in parallel with) the circuit being tested and the meter (does)(does not) affect the circuit operation or the circuit voltages to any extent.

8. Figure A shows the circuit of an IF amplifier stage. The voltage readings shown in the figure are those taken with a VTVM. The probable trouble is

   A. A bad tube---no emission. ______
   B. An open cathode resistor. ______
   C. An open in the plate coil. ______
   D. A defect in the screen circuit. ______

9. The voltages indicated in figure B were taken with a VTVM. All voltages except that of the grid seem to be within 20% of normal. The final tube is removed and the readings do not change appreciably. The most likely trouble is

   A. R2 is open. ______
   B. R1 is defective. ______
   C. The value of R3 or R4 has changed. ______
   D. C1 is open. ______
   E. C1 is leaky. ______

10. In figure B, assume that everything is normal except that R4 opens (infinite resistance). The effect upon the bias of the output stage is

    A. The bias increases. ______
    B. The bias decreases. ______
    C. No appreciable change in the bias. ______
    D. The bias will now change with signal strength. ______

A TWO-WAY RADIO COMMUNICATIONS TRAINING PROGRAM

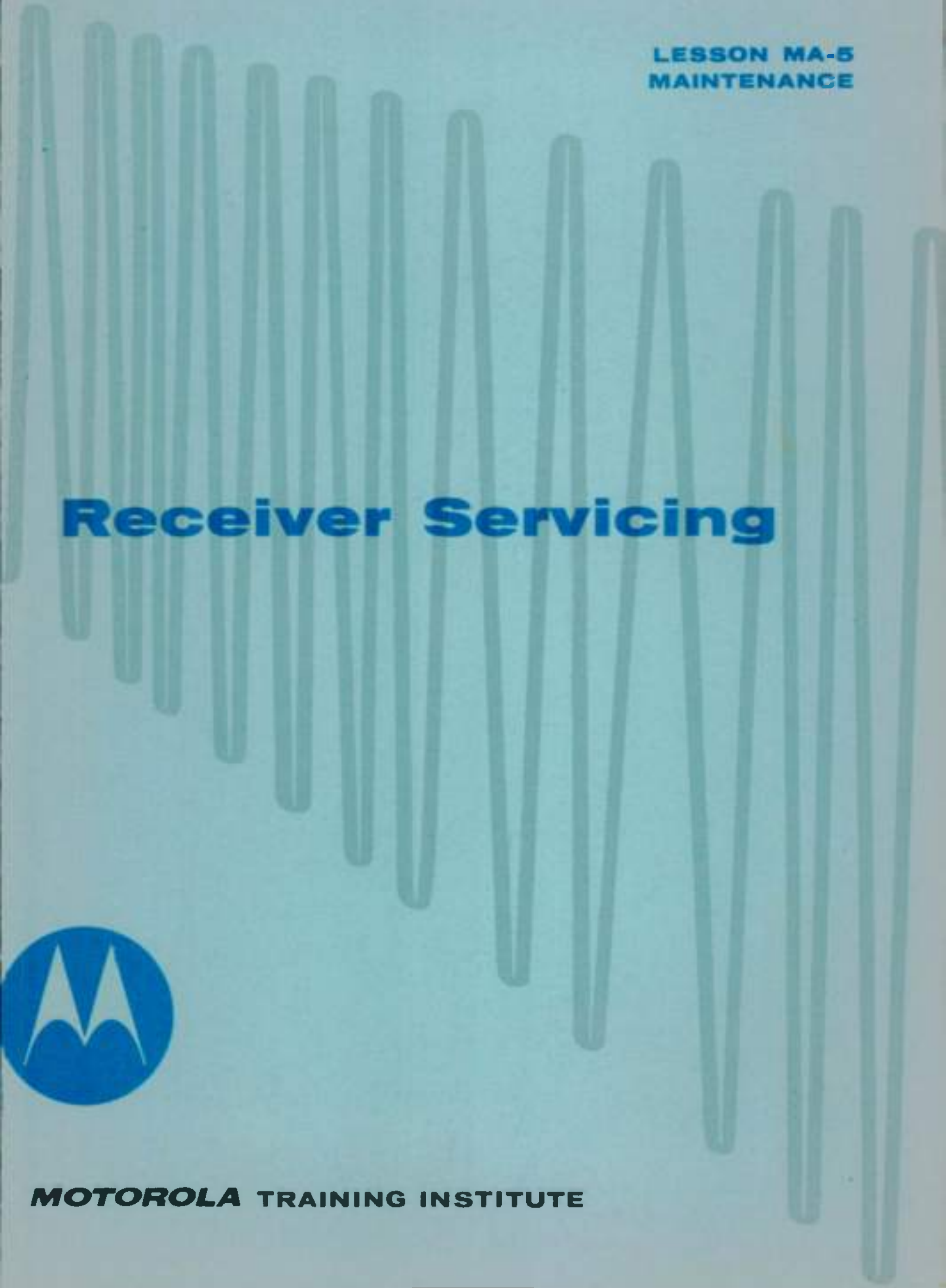

LESSON MA-5
MAINTENANCE

Receiver Servicing

MOTOROLA TRAINING INSTITUTE

A TWO-WAY RADIO COMMUNICATIONS TRAINING PROGRAM

LESSON MA-5
MAINTENANCE

Receiver Servicing

—one of a series of lessons on two-way FM communications—

MOTOROLA TRAINING INSTITUTE
501 W. AUGUSTA BLVD., CHICAGO 51, ILLINOIS
APPROVED BY THE STATE OF ILLINOIS
DEPT. OF REGISTRATION AND EDUCATION

PREFACE

This is one lesson of a complete Motorola Home-Study Course which presents to the Service Technician both the principles of operation and the maintenance of two-way FM radio systems. The program covers mobile, portable and base station equipment, including the latest transistorized units.

RECEIVER SERVICING

Lesson MA-5

TABLE OF CONTENTS

NOTICE

Diagrams and figures referenced in text are "fold-outs" in back of each lesson, for use while studying. The Examinations are also there.

Trucking dispatchers take only seconds to translate telephone pickup orders to radio dispatch calls. Many trucking companies are radio equipping all their pickup and delivery vehicles.

RECEIVER SERVICING

Lesson MA-5

Introduction

In this lesson we shall discuss procedures for quickly locating and correcting troubles within the two-way communications receiver. We shall concern ourselves primarily with the location and correction of a single fault, since a receiver rarely has more than one major trouble. If more than one fault does occur, we must find and correct them one at a time.

Before starting our discussion about receiver trouble shooting, we must assume that previous tests have been made which definitely establish the receiver as the offending unit. That is, we must assume that the power supply and the antenna system are normal.

The specific procedure for trouble shooting the receiver will vary considerably for each service problem; we may use one technique for the receiver in the vehicle and another for the receiver at the base station. The mobile receiver is the more common of the two, so we shall start our discussion with this unit.

The Mobile Receiver

The Trouble-Isolation Chart in figure 1 will serve as a useful step-by-step guide in trouble shooting the receiver. It lists a number of possible troubles and suggests corrective procedures. In this chart we assume the only test instrument available is a Motorola test set. (We are also assuming that there is no carrier frequency signal available for testing the receiver.) This chart is intended to apply specifically to the high-band receiver of figure 2, but the general procedure will apply to many Motorola receivers, of all bands.

Audio Test

The first step when isolating trouble in a receiver is to turn the volume control full on and open the squelch wide (control fully counterclockwise). A loud noise should be heard in the speaker. If there is no sound, the fault is likely to be in the audio or squelch sections of the receiver. We continue with procedure 2, to the left.

Here we use the Motorola test set (either the P-8501 A/B or the TU-546). With the test set plugged into the receiver and adjusted to measure the receiver output (position 8 of P-8501 tester; position 11 of TU-546 tester), we make two checks. First, if the speaker circuit of the receiver is defective, we shall hear noise in the test speaker. Second, the test meter measures the receiver output voltage. Let's first assume that the test set shows a reading and that a loud sound is heard in the test set speaker. We may immediately assume that the speaker or its circuit in the receiver is defective. If the receiver is mounted in the trunk, the speaker is a separate unit which interconnects to the receiver through the control head. It is likely that the wiring is defective. In some models the speaker wires plug into the control head, and one of these connections may be bad. If the trouble cannot be found through visual inspection, it may be necessary to use an ohmmeter or a substitute speaker.

If there is neither noise from the speaker nor a reading on the test meter, the speaker circuit is probably O.K. We now proceed to 3. Remove the noise rectifier tube in the squelch section and listen for sound from the speaker. Removing the noise rectifier disables the squelch section of the receiver and helps to further pinpoint the problem to either the audio circuit or the squelch circuit. If the squelch circuit is defective (if the coupling capacitor between the noise amplifier and the noise rectifier is leaky), there will be a constant positive voltage present at the DC control tube grid and the squelch will remain closed. If the squelch is to open, the negative voltage from the second limiter grid must be available and the positive voltage from the "noise section" must be removed.

If there is still sound after the noise rectifier tube is removed, try new tubes in the squelch section, procedure 4. If there is no change in the operation, the fault is in the squelch circuits and the receiver must be brought to the service bench for more detailed checks.

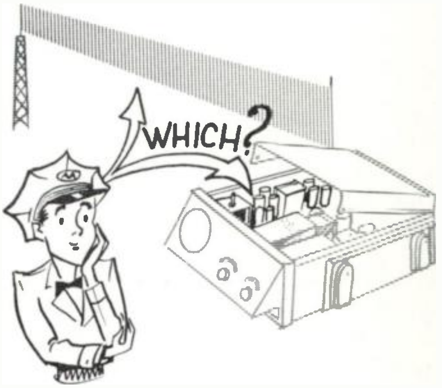

Failure to Hear a Message May Not be the Fault of the Receiver-- Check Carefully.

If there is no sound, however, with the noise rectifier tube removed, proceed to 5 and replace, one at a time, the audio, discriminator and second limiter tubes.

If replacing any of these tubes corrects the trouble, a high noise level will be heard and the receiver may be checked for normal operation. If, however, these tube replacements do not produce any change, the receiver must be further tested on the service bench.

RF and IF Tests

When the serviceman hears noise in the speaker after trying procedure 1, he immediately proceeds to 6 on figure 1. Here he takes readings in positions 1,2,4, 5 and 6 on the test set.

If the reading at position 2 is low (position 1 is normally low without a signal applied), the trouble is probably either in the front end or in the IF section. This includes both oscillators and mixers. It is not possible to isolate the trouble further within this large section of the receiver by making additional tests with the test set, so the best solution is to follow procedure 7. Replace the tubes, one by one, noting the change in the noise and in the meter readings, position 2 in particular.

It is sometimes possible, by noting the changes in noise level, to isolate the trouble within the entire front end of the receiver. If, upon removing the high-frequency oscillator or mixer tube, the noise does not decrease, the trouble is likely to be either in that stage or in a following stage. If the noise changes, the receiver is operating to some extent from this point on to the speaker, but some stages may be weak.

If tube substitution restores the meter reading at position 2 to near normal (and the other positions, as well), we may be reasonably sure that the trouble has been found and corrected. It is necessary, however, to completely check the receiver operation. This necessitates a brush-up on the alignment, particularly the netting of the receiver with the base station transmitter. If tube substitutions cause no change in the meter readings, we must look elsewhere before removing the set for bench servicing. First, the fault may be in the high-frequency oscillator, particularly in the matter of correct frequency. Second, the receiver may need realigning. If neither of these areas proves to be at fault, it may be necessary to further test the receiver on the service bench.

If the readings taken at metering positions 1 and 2 are normal, we next check the reading at position 6. Although this reading indicates oscillator activity, the test set doesn't actually measure the injection voltage from the oscillator plate circuit to the mixer. Besides, even if the reading at position 6 is normal, we cannot be sure that the injection signal to the mixer is at the correct frequency--the oscillator may be off frequency and require alignment.

If the reading at position 6 is too low, the next procedure, 8, is to try a new oscillator tube. If the new tube does not serve to restore operation, a crystal known to be good should be tried. If the readings are still too low, it will probably be necessary to remove the receiver from the vehicle for additional service. If the reading at position 6 returns to normal, the fault is corrected. It will still be necessary, however, to net the receiver frequency with the base station transmitter before placing it in operation.

When analyzing the readings at metering positions 4 and 5 (the primary and secondary of the discriminator), we have to take into account the readings at positions 1 and 2. If the reading at position 5 is low, we must first make sure that the readings at positions 1 and 2 are near normal. (If they are not, the fault is in the stages preceding the limiters rather than in the limiter or discriminator circuits. Thus, we are concerned with low readings at position 5 only when positions 1 and 2 are near normal.) If position 5 is still low, we should try new tubes in the limiter and discriminator stages (procedure 9 in the chart). Finally, if the reading remains low, either the receiver requires alignment or there is some other trouble for which it may be necessary to remove the receiver for bench service. If the readings are restored to normal when the new tubes are tried, it is well to check the alignment and noise idling before placing the receiver back in operation.

The reading at position 4 should normally be close to zero. When only noise is present, the idling of position 4 should be within two scale divisions of zero on the test meter. If the reading at position

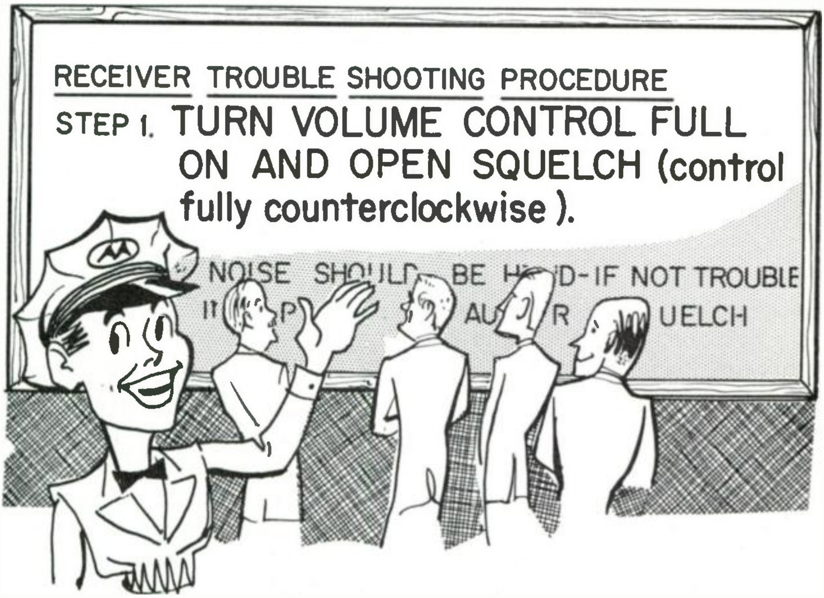

Quick, Efficient Receiver Service Requires a Complete and Logical Trouble Shooting Plan.

4 is not at zero (with no channel signal applied), it is possible that the low or high frequency IF section requires retuning. Also, a strong carrier on some nearby channel may produce "noise," causing the discriminator noise idle to swing off zero. Further checks on the receiver alignment and system netting are required.

When the reading at positions 1, 2, 4 and 5 are normal, the trouble may be due either to (1) off-channel operation of the receiver, or (2) low sensitivity in the receiver front end. For off-channel operation we may follow the suggestions under the "reading at position 6" block; for low sensitivity, follow the suggestions of procedure 7.

Using a Signal for Isolation of Trouble

When a signal on channel frequency (such as one of the transmitters of the system) is available, it is often possible to determine the trouble more quickly and with greater reliability. The Motorola test set may also be used as a source of signal.

In general, we should start our trouble shooting in the same manner as recommended in the chart of figure 1. Unless there is some noise in the speaker (a "live" sound), there is no need for the channel signal; we already know that the trouble is likely to be in the audio or squelch circuit. Also, the reading at position 6 should be normal, for without the high-frequency oscillator working properly there would be no heterodying action and thus no IF to measure or to cause noise quieting.

Assuming then, that we have established the presence of noise in the speaker and that we have obtained a normal reading at test set position 6, we may now check any change in the readings at positions 1, 2, 4 and 5, with the signal applied. It is also important to note any change of noise heard in the speaker when the signal is applied.

Unless the readings in positions 1 and 2 show a reasonable increase and the noise quieting approaches 20 db, the main trouble is in the front end or IF sections of the receiver. Figure 4 is another trouble-isolation chart similar to procedure 6 of figure 1, one that we can use when a channel signal is available.

Starting with the readings at positions 1 and 2, we find three possible variations: (1) the readings do not change, (2) they change but very little, (3) they change appreciably. If the readings change very little (or not at all), and if there is little if any noise reduction, we should recheck position 6. If this is O.K., we then follow procedure 7 in figure 1. When the readings at positions 1 and 2 increase appreciably with a signal applied and some noise quieting is noted, we know that both sections of the oscillator-mixer are working normally. However, there are still two possible trouble sources. The sensitivity may be low, or the high-frequency oscillator may not be at the correct frequency.

A Quick Check On Receiver Operation is Made by Turning the Volume Full-On and Opening the Squelch.

For the low sensitivity condition, follow procedure 7 in figure 1. If this proves good, check the test set reading at position 4. Position 4 may show no change, read zero on signal, or swing away from zero. If there is no change in the reading and noise quieting, the trouble is in the limiter or discriminator stages; try replacing tubes. If this does not correct the fault, the receiver probably requires further servicing with additional test equipment. If the reading swings away from zero when a signal is applied, the high-frequency oscillator is off frequency and may be warped back to zero. (Be sure that the discriminator reads zero with a 455-kc signal.) If the reading shows zero with the signal applied, the oscillator frequency is correct; the trouble, if any, is in either the front end or in the IF stages. See the suggestions of procedure 7 in figure 1.

The readings at positions 5 and 6 do not add appreciably to our present type of trouble shooting technique, for these readings are not likely to change to any extent with an applied signal. Only if the incoming noise fails to saturate the last limiter will there be any change at position 5. There is no normal trouble that might occur which could produce a change at position 6.

To summarize our discussion about the use of a signal to help isolate trouble in the receiver, we see by comparing the readings on the meter that:

1. If the readings at 1 and 2 do not increase and there is no noise reduction, the trouble is in the front end, ahead of the limiters.

2. If there is an increase in the readings at positions 1 and 2 and in the noise quieting, the reading at position 4 immediately tells us whether the receiver is on channel or not.

When to Remove Set for Bench Service

Up to now we have dealt with the receiver in the vehicle. We have implied, however, that on occasion further servicing required its removal to the service bench, that more comprehensive testing was required than could be done with only a test set. Whether we immediately remove the radio set or test it further in the vehicle depends upon the vehicle use. A police squad car, for example, can be out of service for a limited time only. If the trouble cannot be corrected within this time, the radio must be removed for servicing.

Where spare units are available for replacement, minimum time should be spent in servicing the equipment in the car. As soon as the serviceman is convinced that the fault is not a simple one, such as a defective tube, he should replace the unit with the spare and bring the defective set to the shop. This unit, when repaired, will then become the "spare" for the next car which requires it. This procedure saves considerable time for both the serviceman and the customer. By a spare we mean a complete installation, the receiver, transmitter, and power supply. These units are assembled together on a single frame and they are removed from the housing as a single unit. The original set can be removed and the spare installed in a matter of a few minutes. The spare is then checked out with the base station and the vehicle is ready for service.

In many instances the out time of the vehicle is not so important to the owner and it may be practical for the serviceman to make more checks on the receiver and attempt to service it without removal. This is particularly true where the serviceman has additional test equipment available.

In the remainder of this lesson we will discuss several bench service procedures and techniques. These same procedures may apply in general to the receiver while still installed in the car.

Alignment

While general alignment procedures can be given for typical receivers, we shall learn more by referring to a specific receiver chassis. We shall accordingly use the Motorola Sensicon "G" receiver, shown in figures 2, 3 and 5.

Figure 2 is the schematic diagram of this receiver, and figure 5 (which also includes the alignment chart) shows the parts placement as viewed from the top. Although this is designated as the complete "bench" alignment procedure, it can also apply to receiver alignment at the vehicle.

The following test equipment will be required to align the receiver: (1) a Motorola test set and a 455-kc crystal; (2) a Motorola model TU576 signal generator (or equivalent); (3) a known source of signal at the channel frequency. A frequency meter of acceptable accuracy can be used to set the signal generator to the channel frequency.

The photo in figure 5 shows the connections between receiver chassis and test set. The power supply for the receiver is not shown, since the receiver will usually be left in the complete assembly along with the transmitter and power supply.

The first step is to align the circuits tuned to the last IF frequency, 455 kc. This requires the test set and a 455-kc crystal. The adjusting procedure for the test set will be found at the left of figure 5. We first adjust the discriminator primary. A shorting wire is connected across the secondary terminals of the transformer assembly, and the meter switched to position 5. Then, with the generator supplying a 455-kc signal to the grid (pin 1 of V106, figure 2), the primary is adjusted for a maximum reading on the meter. Resonance is indicated by a relatively sharp peak. The primary is adjusted from the bottom of the chassis. After adjusting the primary slug to resonance, the locknut is tightened. Once this adjustment has been made, it is not likely that the primary will require a readjustment for some time.

The next step is to tune the discriminator secondary. Remove the short across the secondary, switch the meter to position -4 or 4, and adjust the secondary for a zero setting, which must be midway between positive and negative peaks. The secondary slug is adjusted from the top of the discriminator transformer assembly.

The remaining 455-kc adjustments are in the IF plate circuits; the tuning procedure appears in steps 3, 4 and 5 of figure 5. The signal is coupled to the input of the Permakay filter. The level is kept low, so that the readings are always linear with any increase in signal strength. Too strong a signal will cause saturation, in which case the readings will show little or no increase. The meter is set to position 2 and L16 is adjusted for a maximum reading. With the meter in position 1, IF coils L15 and L14 are tuned for maximum. This completes the alignment of the low IF section.

The 12-mc section is tuned next (steps 6 and 7). The 12-mc IF frequency is supplied by the signal generator, and its frequency is first adjusted for zero at the discriminator output (position 4). The 12-mc signal heterodynes with the second oscillator frequency at the second mixer, thus producing the 455-kc signal in the last IF section. If a satisfactory reading is obtained at positions 1 or 2, the signal generator is next coupled to the grid of the first mixer. If the reading is not satisfactory, however, it may be necessary to couple it to the grid of the first IF amplifier, V104. With the generator coupled to the grid of V104, coils L11, L12 and L13 are adjusted for maximum. With the generator at the first mixer grid, coils L8, L9 and L10 may be adjusted for maximum.

It is important to check the generator occasionally, making sure it remains at 12 mc throughout the adjustments. This is particularly true during the warm-up period, for the generator is likely to drift during this period. A quick check can be made by observing the reading at meter position 4; the reading must remain at zero. This completes the alignment of both the high and the low IF sections of the receiver. All that remains are the oscillator-multiplier and RF circuits.

With no signal applied and the meter at position 6, L5 is adjusted for maximum oscillator output. First, however, it is important to preset the trimmer capacitor C110 in the oscillator so that the tuning slot is parallel with the chassis. This places the oscillator close enough to its correct frequency so that the circuits will be adjusted for maximum even if a slight change of frequency becomes necessary.

After L5 is adjusted for maximum activity, the multiplier coils must be tuned. This requires a signal at the channel frequency, and the signal generator is used for this purpose. The signal generator is first set to the channel frequency in accordance with step 9 in figure 5. With the channel signal applied at the mixer or at the RF grid (antenna input), L6 or L7 are adjusted for a maximum reading at positions 1 or 2. (Unless the receiver sensitivity is maximum, it may be necessary to use position 2 for these initial adjustments.)

The RF coils are adjusted next. With the channel signal applied to the grid of the RF amplifier, L2, L3 and L4 are adjusted for a maximum reading at positions 1 or 2. If a reading can be obtained with the signal applied to the antenna input terminals, it is permissible to adjust the coils in this manner instead of injecting the signal directly at the grid.

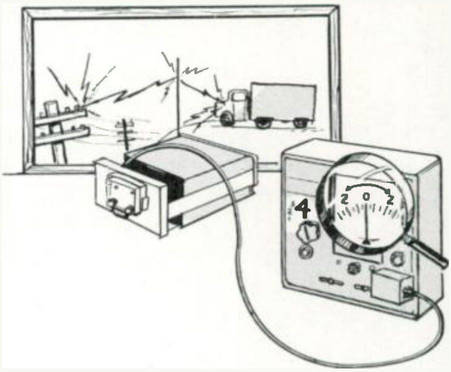

A Properly Aligned Receiver will "Noise Balance" within Two Scale Divisions of Zero in Position 4 on the Test Set.

The antenna coil is now adjusted by applying the RF signal through a 6-db, 50-ohm pad to the antenna connector and adjusting L1 for a maximum reading at position 2. (If the reading is satisfactory, use position 1.)

The receiver is finally adjusted for the exact channel frequency. This is done by "netting" the receiver frequency to that of the transmitter with which the receiver normally operates. The transmitter must be turned on; then, with the meter in position 4, C110 is adjusted for a zero reading.

After the receiver has been netted to the base transmitter, it must be checked for "noise balance." Effective noise balance can be realized only after the receiver has been netted to the carrier it is to receive. As shown in step 13 (figure 5) of the alignment procedure, this also requires the receiver to be installed in the vehicle. The vehicle motor is left running while a signal at the channel frequency is received from the base transmitter. Ideally, this signal should cause a quieting of from 20 to 30 db. The plate coil of the first stage in the low IF section may now be retuned slightly for a reduction of ignition noise. In making this adjustment it is most important to observe the meter reading at position 2, which must not decrease more than one-half microampere (half-scale division on the meter). If the above procedure is unsatisfactory, the first IF plate coils can be used. The readings of the first IF are sharper, however, and this procedure may cause a detuning of the circuit, lowering the receiver's sensitivity. It is thus necessary to observe the meter reading at position 2 closely while making this adjustment. Noise balance is best achieved in different parts of the receiver depending upon the particular model and circuit. Always proceed according to the recommendations of the service manual.

Unless the noise adjustment is made for the exact carrier frequency which is to be received, it will not be effective when the receiver is put in actual operation. Furthermore, when the correct noise adjustment is realized, the idling of position 4 without a signal should fall within one or two microamperes of zero. This means that the discriminator balance for the noise input should be within 1 or 2 scale divisions (position 4) when the signal is removed. Failure to realize this noise idling indicates that the second IF section is not aligned to the center of the Permakay filter. When this occurs, it is best to recheck the alignment of the 455-kc circuits as well as the adjustment of the ignition balance.

Sensitivity Check

Whenever the receiver has been aligned or any general service has been performed, a sensitivity check should follow, in order to make sure that the receiver will work satisfactorily.

A sensitivity check requires a T1034A signal generator (or equivalent) and some kind of output indicating device such as a sensitive output meter. In position 8 the Motorola P8501 test set can be used as a convenient output indicator for the receiver. The quieting sensitivity of the receiver is the amount of RF signal required at the receiver input in order to reduce the receiver noise by 20 db. The squelch control is turned completely counterclockwise to open the squelch circuit, and the audio volume is adjusted for approximately 0.5 volt output. If the P8501 test set is being used, the receiver volume is adjusted for a reading of 10 on the meter; if an AC output meter is used, the volume is adjusted to any convenient value, such as 0.5 volt.

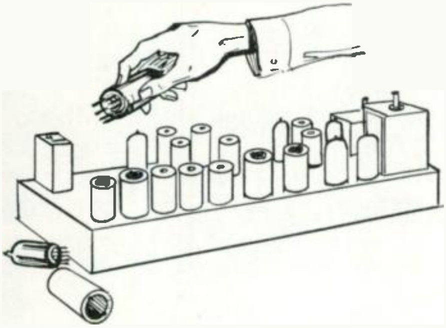

In Tube-Type Receivers, Most Troubles are Repaired by Replacing a Defective Tube.

Connect the signal generator through a 6-db, 50-ohm pad to the antenna connector and place it on channel frequency by monitoring position 4 on the test set. The generator output is then returned to zero and increased until the output reading is reduced to one-tenth its original value. The generator output, in microvolts, is the receiver sensitivity. This value should be checked against the receiver specs. If the receiver is not up to full sensitivity it would be well to determine the reason and make the necessary corrections. Sensitivity may be improved by touching up the alignment in the front end of the receiver, or by substituting new tubes in the front end stages. The supply voltages, both A and B, should also be checked. After these areas have been exhausted as possible sources of poor sensitivity, check the meter readings on the test set. It may be necessary to make stage gain checks.

Stage Gain Measurements

Stage gain measurements are shown in figure 6. The instruments and terminations recommended are important if representative readings are to be secured, and they must be followed in detail. The stage gains shown in figure 6 can be realized only when the receiver is properly aligned. If there is any doubt on this score, the receiver should be completely aligned as recommended in the instruction manual.

By comparing the actual reading (with the meter in positions 1, 2, 4, 5 and 6, respectively) with the corresponding reading in the chart, an indication of the general operation of the various circuits can be obtained. By measuring the gain of the receiver at each stage, the one causing the low sensitivity is readily isolated. Voltages and resistance measurements can be made to determine the defective component within the stage.

The following example of trouble shooting by means of stage measurements is typical. Let's sup-

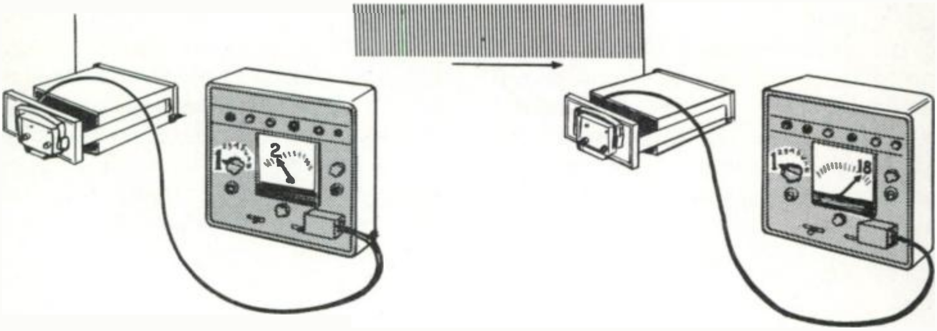

Comparing Meter Readings With and Without a Channel Signal is Very Helpful in Trouble Shooting the Receiver.

pose that the meter reads low in positions 1 and 2, when measuring noise input. The 12-mc input of 5 uv to pin 1 (grid) of V104 gives the correct 20-db quieting, but a 12-mc input of 3.0 uv at the mixer grid (pin 1 of V103) does not give 20 db of quieting, nor does a signal of 30.0 uv give a reading of -2 at position 1. This indicates that the gain between the grid of V103 and the grid of V104 is not correct, and the fault is probably in the grid or plate circuit of V103. Voltage checks are now made at the plate and cathode. If these readings are approximately correct, resistance tests may be made on the stage, including the plate coils. These may be tuned in the normal manner for checking the proper peaks. Failure of a coil to show a sharp peak indicates a definite fault in the tuned circuit. Open coupling capacitors must also be considered, although this condition results in sharp tuning with poor sensitivity. Because of their small capacitance, these units cannot be easily tested; it is usually better to substitute another capacitor and compare the results.

The effect of an open coupling capacitor depends on the amount of signal present as well as on the location of the capacitor. At the sensitivity level of the receiver, the relatively weak signal will find little coupling from one circuit to the next and the receiver may be completely dead. With a strong signal, however, it is very probable that the signal will be coupled from one circuit to the next even though the "coupling" capacitor may be open! Under these circumstances the receiver may operate fairly well, though its sensitivity will have been considerably reduced.

The results will also depend on whether the coupling capacitor is in the RF section or in the first IF section. Stray coupling is always more likely to occur at the higher frequencies.

When making stage gain measurements the correct procedure is to start at the last stage of the set and continue toward the antenna, until the point is located. The trouble is thus pinpointed to a particular stage in the receiver.

Discriminator Response Curve

One of the most important factors in securing clarity of the message reproduced by the speaker is for the discriminator "recovery slope" to be linear over the deviation limits of the system. This subject was discussed in the receiver lesson dealing with discriminator action. The discriminator response curve must be linear over a frequency range greater than the deviation employed by the system and in general this linearity is one and one-half to two times that of the deviation. This allows for some shift in the incoming IF signal and for possible detuning of the discriminator secondary.

The linearity of the audio recovery can be determined with the test set, using crystals 15 kc above and 15 kc below the center frequency of the last IF.

Each kilocycle of deviation in a 15-kc deviation system should produce approximately one volt at the discriminator output--at 15 kc from center frequency the discriminator output should be at least 15 volts. By comparing the output at 15 kc above center and 15 kc below center, the linearity of the discriminator will be known. A 10 per cent variation of the output voltages is permissible, but any greater difference represents too much distortion. When this occurs, recheck the alignment of the discriminator primary, the secondary, and the last IF section. If the receiver is operating on a 5-kc deviation, the output voltage should be at least 15 volts for the 5-kc deviation. These voltage checks are made at the full discriminator output, not at the input to the first audio stage. (In figure 1 this is at pin 5 of the 6AL5 discriminator tube base.)

Where the DC type of volume control is used, the output of the second limiter will be controlled to some extent by the setting of that control. For an accurate check, therefore, the volume control must be set temporarily at maximum.

Audio Stage Gain Measurements

While normal problems in the audio stage usually will not often require stage gain measurements, a system for determining relative audio levels should be known. In order to check the entire audio section, it is also important to test the deemphasis section. The audio input should thus be fed to the discriminator output, pin 5 of the 6AL5 tube socket.

For discussion purposes, typical readings were taken for the receiver circuit of figure 1. It should be kept in mind, however, that these figures are typical of one receiver only, and a 10 per cent variation from one receiver to another of the same model may be expected. Moreover, different receiver models have different gain requirements, and great variations may be found. The test signal was taken at 1000 cps. With frequencies other than 1000 cps, different gains should be expected.

The volume and audio level controls were first adjusted to maximum; the 1000-cps signal was then applied to pin 5 of the 6AL5 socket and adjusted to a level of 10 volts. The voltage at the grid of the first audio amplifier was 0.5 volt. This loss can be attributed to the deemphasis network and the large resistor R141 in series with the audio level control. The audio output at the plate of the first amplifier was nearly 9 volts, a stage gain of 18 (0.5 volt to 9 volts), or 25 db. There is some loss in the coupling from the first audio stage to the power amplifier, and the voltage at the grid of the 6AQ5 was 8.5 volts. The output voltage was measured at both the plate of the tube and at the lead to the voice coil (transformer secondary). These voltages were 110 volts and 2.5 volts, respectively. The output stage is designed to deliver a specific amount of power to operate the speaker, and the desired power for this receiver is two watts. The power output equals the voltage squared, divided by the resistance. The square of 2.5 is 6.25; dividing this by 3, the impedance of the voice coil, results in more than 2 watts.

By making such audio measurements on any receiver you may be servicing, you will know what the voltage levels should be when the equipment is operating in a normal manner. Then, when something happens, a second set of readings may be taken for the audio section and the results compared. These typical readings may be recorded for quick reference at any time. In fact all the readings of any receiver should be kept for future reference. This data is most valuable, for it immediately shows which circuits have changed since the last readings were taken.

When making stage gain measurements, it must be remembered that the signal level will have some effect on the amplification of the various stages, particularly in the audio section. The gain for a strong audio frequency signal may be considerably different from that of a weak audio frequency signal. More accurate results can be obtained by using a typical signal level such as the one illustrated above. Such a signal also indicates whether or not the audio power output is up to par. Too large a signal overdrives the tubes, causes distortion, and lowers the net gain.

Oscillation

In a two-way communications receiver, oscillation may take place without the operator or serviceman being aware of the fact. Oscillation within one of the stages or sections of a receiver is thus a problem which must be anticipated by the serviceman.

Oscillation may have various effects upon the receiver, depending upon the strength of the oscillation and where it is taking place. One of the most common effects is a partial quieting of the noise usually heard in the speaker when the receiver is unsquelched. The oscillation acts like a signal at the limiters, reducing the noise. Following this noise reduction, we can also expect that the noise level might be so low that the squelch circuit would be unable to squelch the receiver.

It is a characteristic of most oscillations that they produce higher than normal meter readings for the limiter grid circuits and the discriminator primary. Moreover, the discriminator secondary reading may be full scale in either direction rather than at zero, and alignment adjustments may be critical and erratic.

Trouble-shooting techniques such as "tube-pulling" and "grid-grounding" usually show which stage or section is oscillating. Oscillation usually occurs in the RF section of the receiver or in the last IF section, and pulling the front end tubes will usually pinpoint the oscillation to one of these two areas.

Common causes of oscillation are open bypass capacitors, broken ground leads, coupling capacitors out of position (away from the chassis instead of next to the chassis), ungrounded shields, and excessive supply voltages. The oscillating section of the receiver can often be found by bringing the hand close to the suspected section and noting the change in the meter readings, or in the sound coming from the speaker. When testing for oscillation, the input should always be terminated either into its antenna or into a 50-ohm load. Unless this is done, the RF stage is likely to oscillate.[1]

---

1. See Test Methods, section 2, pages 61-86, and section 3, pages 5-10.

STUDENT NOTES

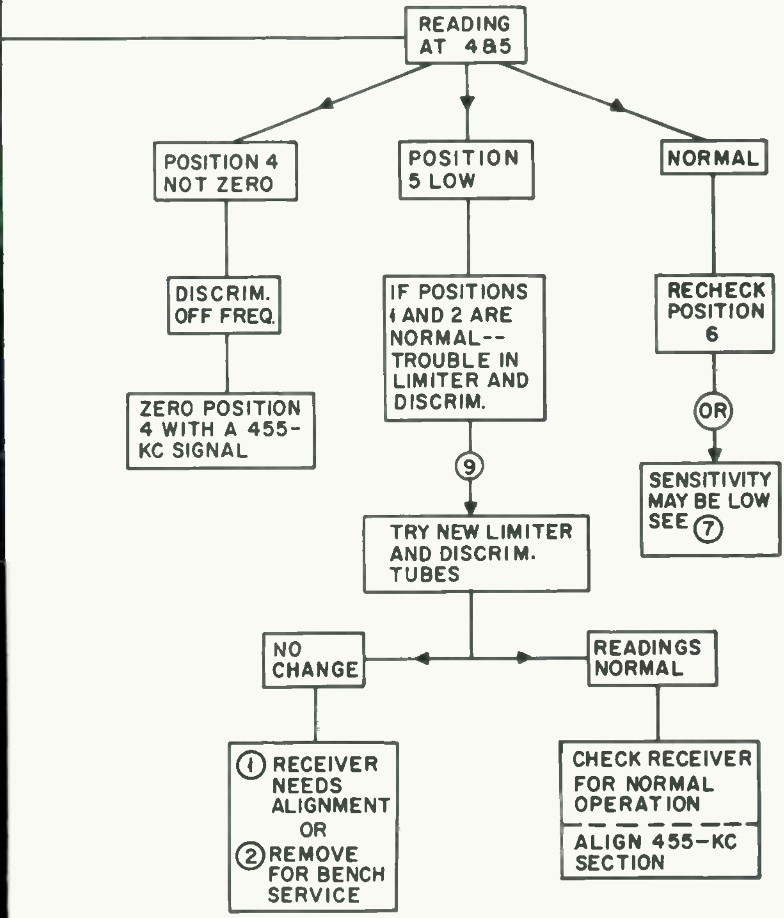
READING AT 485
POSITION 4 NOT ZERO
DISCRIM. OFF FREQ.
ZERO POSITION 4 WITH A 455-KC SIGNAL
POSITION 5 LOW
IF POSITIONS 1 AND 2 ARE NORMAL-- TROUBLE IN LIMITER AND DISCRIM.
9
TRY NEW LIMITER AND DISCRIM. TUBES
NO CHANGE
1 RECEIVER NEEDS ALIGNMENT
OR
2 REMOVE FOR BENCH SERVICE
READINGS NORMAL
CHECK RECEIVER FOR NORMAL OPERATION
ALIGN 455-KC SECTION
NORMAL
RECHECK POSITION 6
OR
SENSITIVITY MAY BE LOW SEE 7

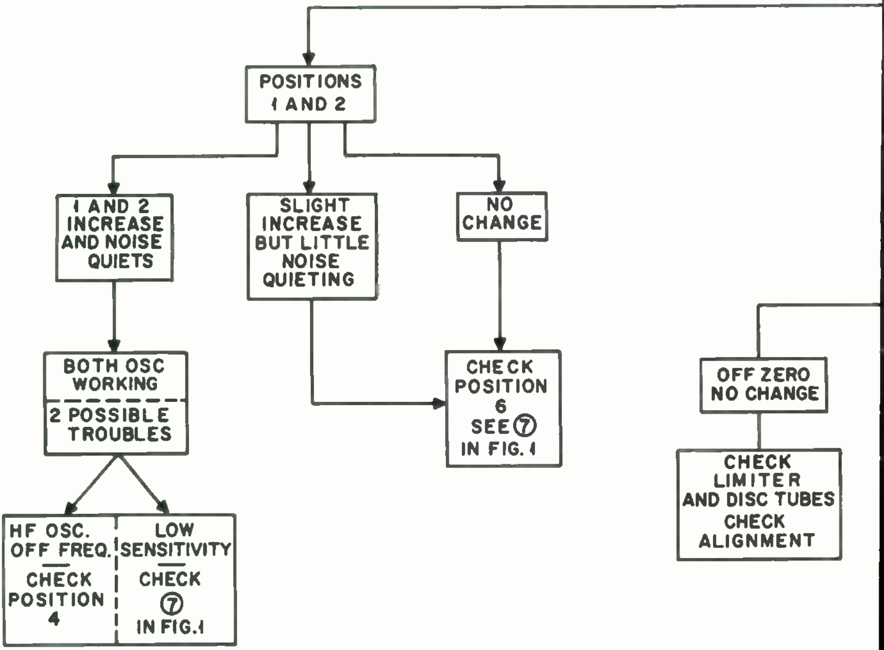
POSITIONS 1 AND 2
1 AND 2 INCREASE AND NOISE QUIETS
SLIGHT INCREASE BUT LITTLE NOISE QUIETING
NO CHANGE
BOTH OSC WORKING
2 POSSIBLE TROUBLES
CHECK POSITION 6 SEE ⑦ IN FIG. 1
HF OSC. OFF FREQ.
CHECK POSITION 4
LOW SENSITIVITY
CHECK ⑦ IN FIG. 1
OFF ZERO NO CHANGE
CHECK LIMITER AND DISC TUBES
CHECK ALIGNMENT

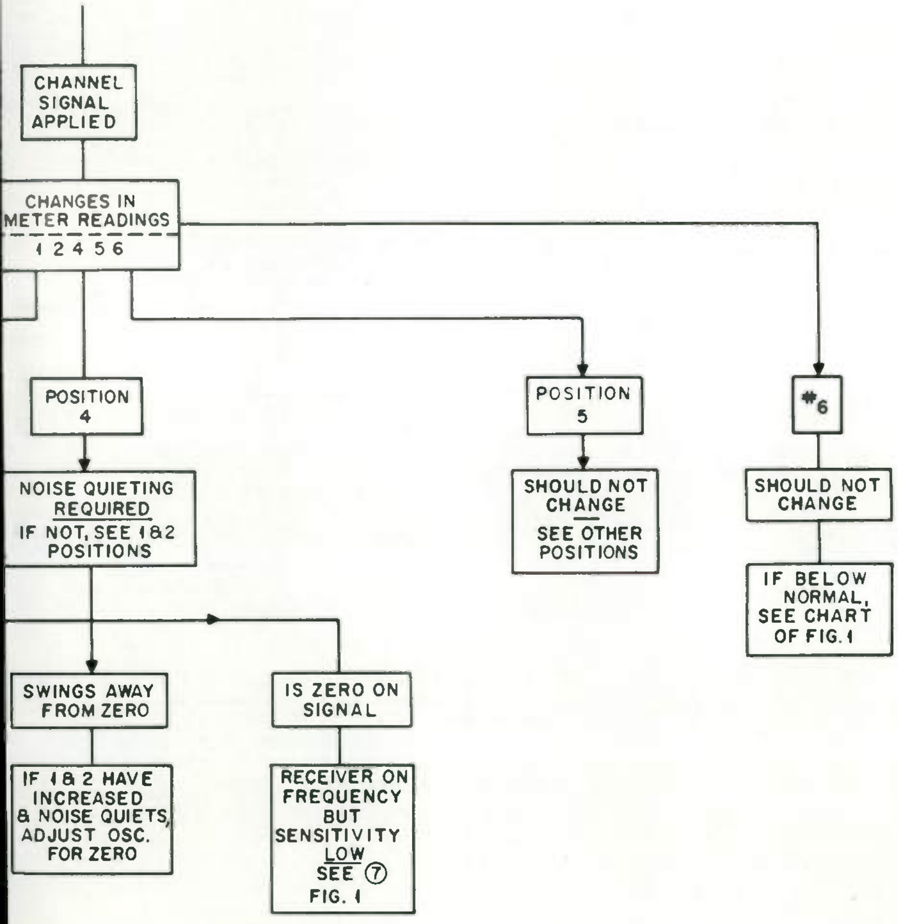

IGURE 4

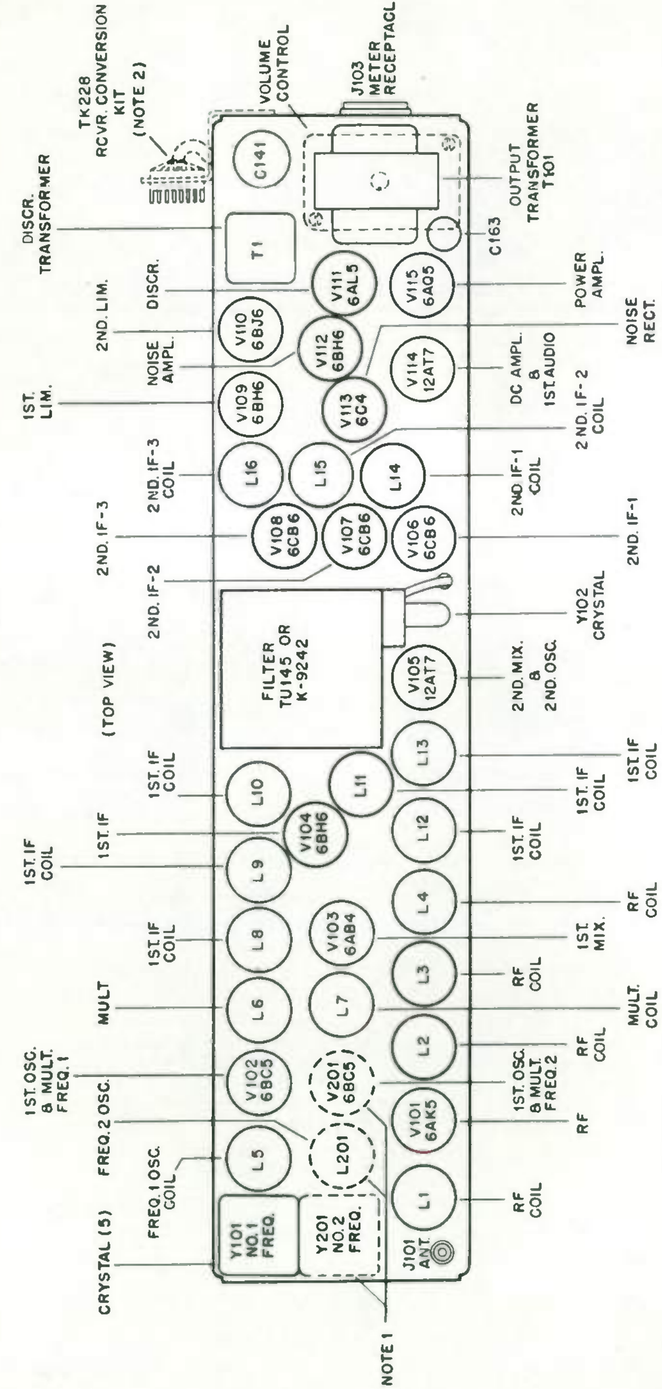

NOTES:
1. Y201, L201 & V201 ARE USED ON 2 FREQUENCY MODELS ONLY.
2. TK228 RECEIVER CONVERSION KIT USED ON TA163-A SERIES MODELS ONLY.

144-174 SENSICON "G" RECEIVER PARTS LOCATION DETAIL

FIGURE 3

RECEIVER TROUBLE-ISOLATION CHART
NO SIGNAL AVAILABLE

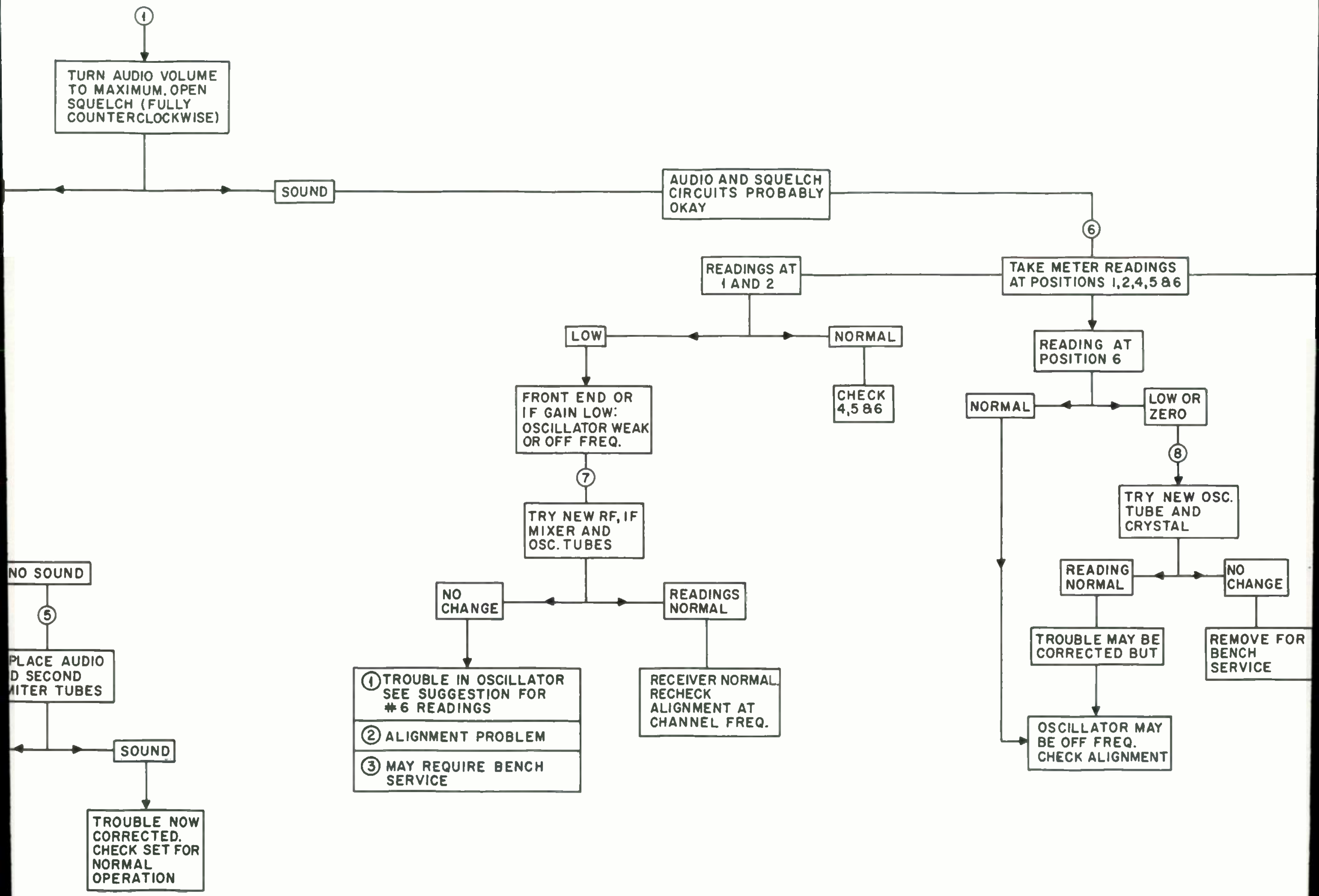

FIGURE 1

STUDENT NOTES

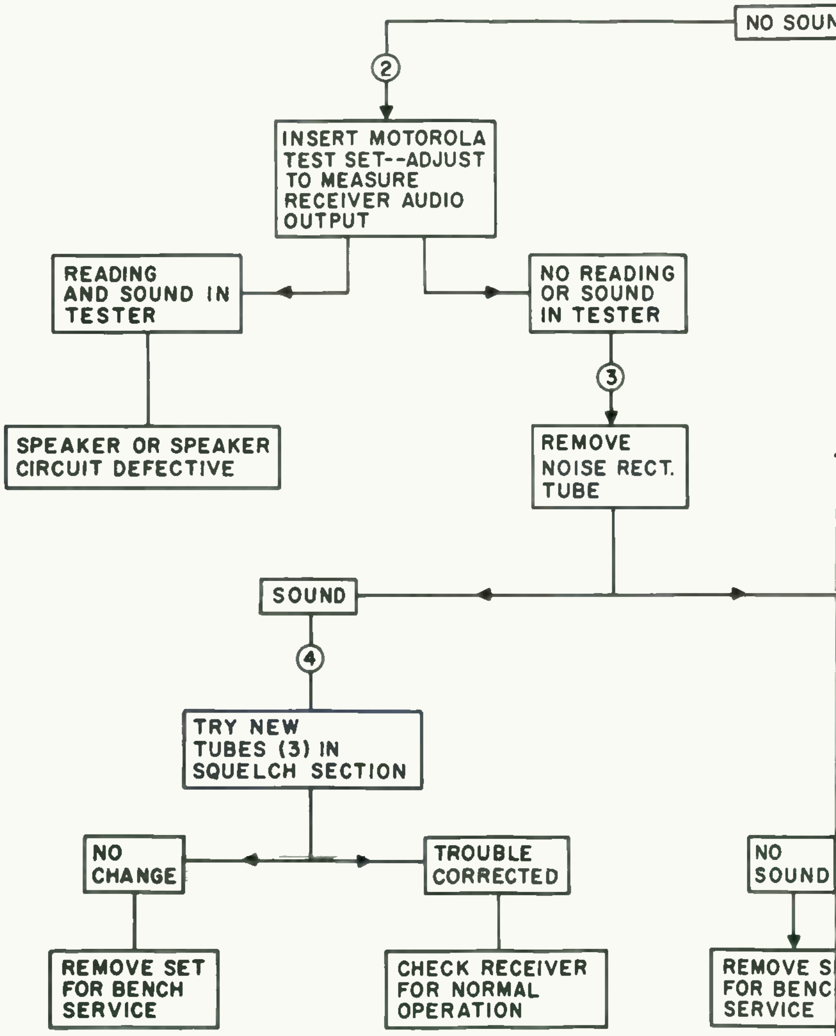

E INDICATED IN OHMS ± 10%, 1/2 WATT
ED K = 1000 OHMS

RE INDICATED IN MICROMICROFARADS
ED

OR "X" FILAMENTS IS ALWAYS 6VDC
RO (GND.) WHEN OPERATING FROM A
OURCE OR 12VDC WHEN OPERATING
POWER SOURCE

WITH A VTVM (B+ = 200V) AND WITH
AT MINIMUM (COUNTERCLOCKWISE)
L AT MAXIMUM (CLOCKWISE).

FER IN VALUE FOR THE VARIOUS RECEIVER
DIAGRAM IS APPLICABLE
G TABLE FOR SPECIFIC IDENTIFICATION

MODELS			
BR	TA140-BS	TA163-AW	TA163-AX
242	K-9240	K-9241	K-9242
K	100K	18K	18K
O	220	680	680
OK	820K	560K	560K
K	180K	56K	56K
K	180K	56K	56K

OF VOLUME CONTROL ARE USED

TED TO TERMINAL 5 ON POWER SUPPLY TERMINAL
TO THE MOVING ARM OF THE DC VOLUME CONTROL
ED DIRECTLY TO TERMINALS 1 & 2 ON POWER SUPPLY

TED TO TERMINAL 5 ON POWER SUPPLY TERMINAL
DIRECTLY TO B+
4 OHM RESISTOR IS INSERTED BETWEEN TERMINALS
PLY TERMINAL BOARD AND THE SPEAKER

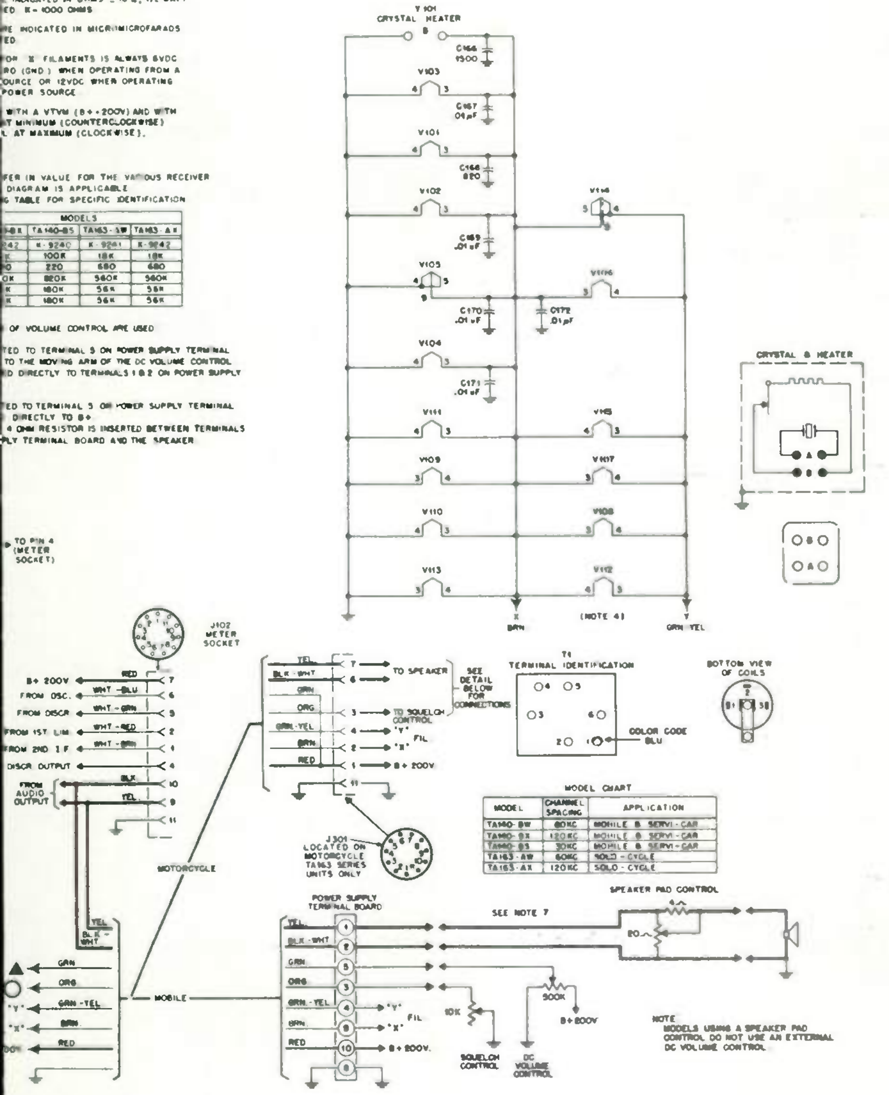

MODEL CHART

MODEL	CHANNEL SPACING	APPLICATION
TA140-BW	60KC	MOBILE & SERVI-CAR
TA140-BX	120KC	MOBILE & SERVI-CAR
TA140-BS	30KC	MOBILE & SERVI-CAR
TA163-AW	60KC	SOLO-CYCLE
TA163-AX	120KC	SOLO-CYCLE

NOTE
MODELS USING A SPEAKER PAD CONTROL DO NOT USE AN EXTERNAL DC VOLUME CONTROL

STAGE MEASUREMENTS

APPROX. MICROVOLT INPUT	INPUT TO	FREQ. IN MC.	METER POSITION	METER READING OR DB.
Noise	Antenna	-	1	-0.1 to -1
Noise	Antenna	-	2	-18 to -40
Noise	Antenna	-	4	*0
Noise	Antenna	-	5	-12 to -16
Noise	Antenna	-	6	-12 to -40
0.5 or less	Antenna	F_c	DB Meter	20 db. (quieting)
6.0	Antenna	F_c	1	-2
2.5 14.0	Pin 1 of V 101 1st RF	F_c F_c	DB Meter 1	20 db. (quieting) -2
3.8 30.0	Pin 1 of V 103 1st Mixer	12.0 12.0	DB Meter 1	20 db. (quieting) -2
5.0 150	Pin 1 of V 104 1st IF	12.0 12.0	DB Meter 1	20 db. (quieting) -2
5000	Filter	.455	1	-5
2000	Pin 1 of V 106 2nd IF-1	.455	1	-5
150,000	Pin 1 of V 107 2nd IF-2	.455	1	-5

*A meter reading of up to ±1 ua of zero is allowable without any degradation.

NOTE

A Model T1034A Signal Generator (or equivalent) with output cable should be used when taking readings on V101, V103, and V104. A Model 65B Signal Generator with a 30 ohm terminated output cable was used when taking all other readings.

FIGURE 6

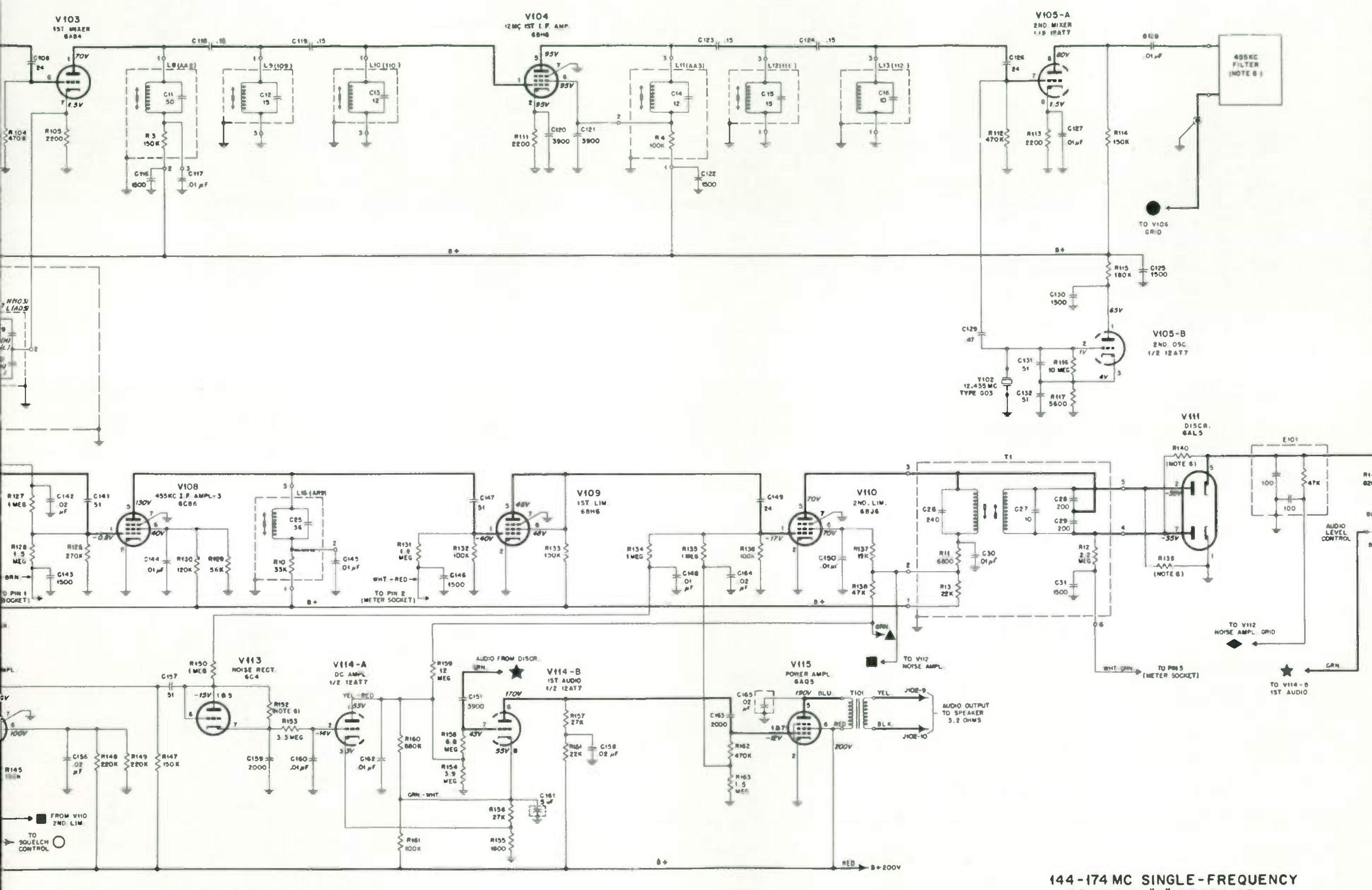

NOTES

1. REFER TO PAR

2. ALL RESISTOR
UNLESS OTHE

3. ALL CAPACITO
UNLESS OTHE

4. HEATER INPUT
Y INPUT VOL
6VDC PRIMAR
FROM A 12VDC

5. ALL VOLTAGES
THE SQUELCH
AND DC VOLU

6. COMPONENTS
MODELS FOR
REFER TO THI

COMPONENT	TA
FILTER	TU-
R125	1
R146	6
R152	5
R139	5
R140	5

7. TWO DIFFERE
A. DC CONTR
1. GREEN L
BOARD
2. SPEAKE
TERMINA
B. PAD CONT
1. GREEN L
BOARD
2. POTENT
1 & 2 ON

144-174 MC SINGLE-FREQUENCY SENSICON "G" RECEIVER SCHEMATIC DIAGRAM

FIGURE 2

STUDENT NOTES

STUDENT NOTES

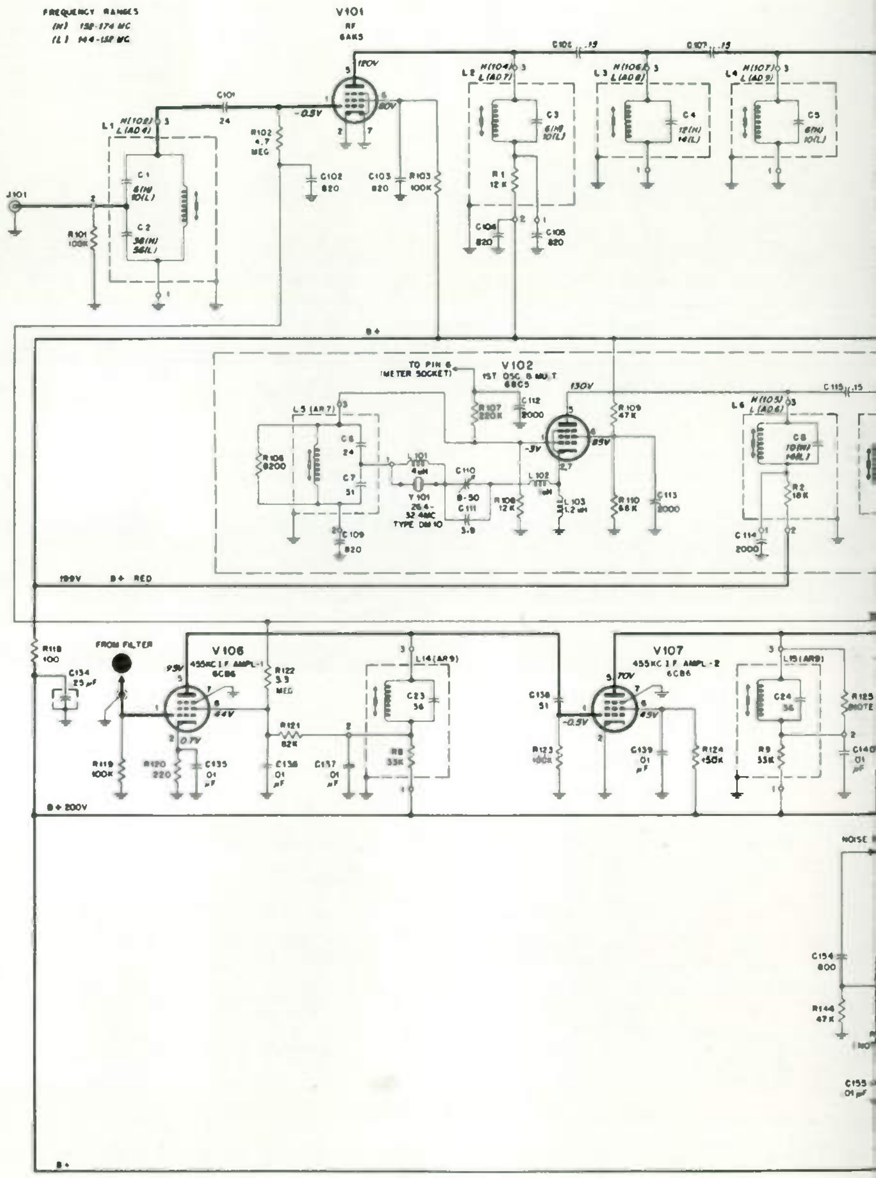

	ALIGNMENT FREQUENCY	ADJUSTMENT	METERING	
			SWITCH POS.	READING
AIL A, lower left). e ON-OFF switch to its position and place meter reading and	455 kc., sharp tuning	T1 bottom slug	5	Maximum
g (selector switch in	455 kc., sharp tuning	T1 top slug	+4 or -4	Zero
osely so that an in- sition to keep the input	455 kc., sharp tuning	L16	2	Maximum
the selector switch in	455 kc., broad tuning	L15	1	Maximum
t ON-OFF switch in	455 kc., sharp tuning	L14	1	Maximum
ion. After adjusting 104. The signal must st L13, L12 and L11	12 mc., sharp tuning	L13, L12 and L11	1 or 2	Maximum
03 and adjust L10, L9	12 mc., sharp tuning	L10, L9 and L8	1 or 2	Maximum
r adjustment slot is ctor switch in g L5. Then repeat the	Receiver crystal frequency, sharp tuning	L5	6	Maximum
follow the procedure stead of pin 7, V105.	Carrier frequency, sharp tuning	L7, L6	1 or 2	Maximum
the grid (pin 1) of	Carrier freq., sharp tuning	L4, L3 and L2	1 or 2	Maximum
hm, attenuation	Carrier freq., sharp tuning	L1	1 or 2	Maximum
eive. A zero meter tting by rotating ted. Set C110 for	Carrier freq., sharp tuning	C110	+4 or -4	Zero
g the adjustments. l generator or LUME control on lector switch to ter reading more	Carrier freq., slight adj.	L14	2	Reduce audible noise

COMPLETE BENCH ALIGNMENT PROCEDURE FOR MOTOROLA SENSICON "G" RECEIVER

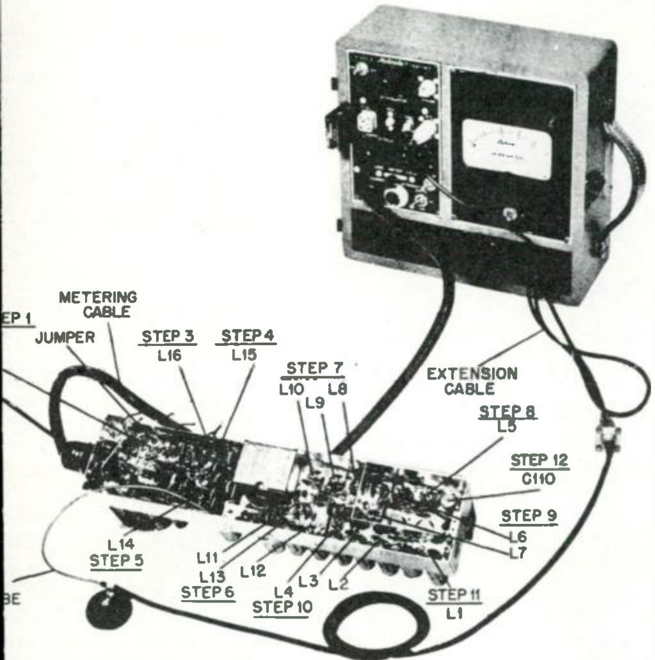

HOW TO SET UP THE MODEL 80 SIGNAL GENERATOR FOR 12 MC I.F. ALIGNMENT

he signal generator output loosely to the grid (pin 7) of V105. Couple
gh input to give a small meter reading.

est set selector switch to position +4 or -4. Set the ON-OFF switch to
osition.

ignal generator frequency for approximately 12 mc.

he exact 12 mc. point by rotating the generator dial back and forth
he 12 mc. setting until you obtain a meter reading of exactly zero (posi-
The meter reading should go above and below zero as the dial is rotated.
e generator set for zero meter reading. Make sure the signal remains
throughout the alignment (generator may drift).

PRIVATE LINE RECEIVER
BENCH ALIGNMENT CHART
FIGURE 5

STEP	STAGE, TEST CONDITIONS AND PROCEDURE
1	DISCRIMINATOR PRIMARY—Solder a short jumper across terminals 4 and 5 of the discriminator secondary coil (see Set up the P-8501-A Test Set as described in the left hand column. Place the test set selector switch in position 1 and the ON position. Move the RF probe around near pin 1, V106, until the meter reading is at least 15 ua. Secure the pr the selector switch in position 5. Loosen the locknut of the T1 bottom slug adjustment screw, adjust the slug for maxi tighten the locknut while holding the slug in the position of maximum meter reading. Unsolder the jumper.
2	DISCRIMINATOR SECONDARY—With the RF probe placed as in step 1 adjust the top slug of T1 for exactly zero meter position +4 or -4).
3	455 KC. I.F. COIL L16—Place the RF probe near the input to the 455 kc. I.F. filter (see illustration). Couple the si crease of signal strength will produce a linear increase in meter reading (switch in position 2). Secure the probe at a constant level. Adjust L16 for a maximum meter reading with the switch in position 2.
4	455 KC. I.F. COIL L15—Couple the signal to the I.F. filter so as to obtain a maximum reading of approximately 5 ua position 1. Adjust L15 for a maximum reading.
5	455 KC. I.F. COIL L14—Use the same conditions as in step 4. Adjust L14 for a maximum meter reading. Place the the OFF position and remove the RF probe.
6	12 MC. I.F. COILS L13, L12 and L11—Set up the Model 80 signal generator (or equivalent) as described below the il the signal generator set the test set selector switch to position 1 or 2 and couple the generator output to the grid (pin be coupled loosely so that an increase of signal strength produces a linear increase in meter reading (position 1 or 2) for a maximum meter reading with the switch in position 4.
7	12 MC. I.F. COILS L10, L9 and L8—Follow the same procedure as in step 6 except couple the signal to the grid (pin and L8.
8	FIRST OSCILLATOR COIL L5—Uncouple the signal generator. Position the ceramic trimmer, C110, so that the scre parallel with the length of the receiver chassis (see illustration). Adjust coil L5 for a maximum meter reading with t position 6. On two-frequency receivers be sure that the F1-F2 switch on the control head is in the F1 position while a procedure with the switch in the F2 position while adjusting trimmer C204 and coil L201.
9	MULTIPLIER COILS L7 and L6—The signal generator must be set for the exact carrier frequency to be received. T outlined below the illustration except select the carrier frequency instead of 12 mc. and couple the signal to pin 6 of With the generator output coupled loosely to pin 6, V103, adjust L7 and L6 for maximum meter reading (position 1 o
10	RF COILS L4, L3 and L2—Keep the signal generator set for the carrier frequency as in step 9. Couple the signal lo V101. Adjust L4, L3 and L2 for maximum reading (position 1 or 2).
11	ANTENNA COIL L1—Connect the signal generator output to the antenna receptacle on the receiver chassis. Use a 6 pad between the generator and the receiver input. Adjust L1 for maximum reading.
12	FREQUENCY CHECK—Transmit the carrier frequency from the transmitter which this receiver is normally intende reading indicates that the receiver is on frequency. Adjust trimmer C110 to obtain a zero meter reading. Check the C110 back and forth while observing the meter. The reading should go above and below the zero point as the trimmer exactly zero meter reading. On 2-frequency model set switch to F2 position and adjust C204 for zero meter reading.
13	IGNITION NOISE ADJUSTMENT—Install the receiver in the vehicle. Start the vehicle engine and allow it to run whil Turn the receiver ON and allow it to warm up for five minutes. Radiate a carrier frequency signal from a transmitte test set (see test set instruction manual). The signal should be just strong enough to produce quieting (20 to 30 db). T control head to normal usable level. Plug the test set metering cable into the METER receptacle on the receiver. Se position 2 and note the meter reading. Adjust coil L14 very slightly to reduce audible ignition noise. DO NOT reduce than one-half microampere.

STUDENT NOTES

HOW TO SET UP THE P-8501-A TEST SET FOR DISCRIMINATOR AND 455 KC. I.F. ALIGNMENT

1. Set the REC.-XMTR.-0-50 UA. switch to the REC. position.
2. Plug a 455 kc. crystal into the two-pin crystal socket.
3. Set the GRID CURRENT-METER-FIELD STRENGTH selector switch to the GRID CURRENT position.
4. Set the ATTENUATOR control for maximum output (10).
5. Place the test set ON-OFF switch in the ON position. (Test set operates on internal battery. Conserve battery life by keeping switch OFF when set is not in use.)
6. Adjust the frequency control (ADJ) for a maximum meter reading.
7. Set the ON-OFF switch to the OFF position.
8. Set the GRID GURRENT-METER-FIELD STRENGTH switch to the METER position.
9. Plug the test set metering cable into the METER receptacle on the receiver chassis.
10. Connect one end of the test set extension cable to the RF OUTPUT jack on the test set. Connect the other end of the extension cable to the RF probe cable.

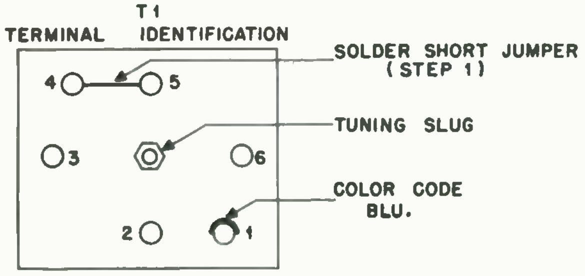

DETAIL A

Motorola Training Institute

4501 West Augusta Blvd., Chicago 51, Ill.

Please PRINT or use STAMP

Name ______________________________ **Student No.** ______

Street __________________ **Zone** ____ **Date** ______

City _______________ **State** ________ **Grade** ______

EXAMINATION LESSON MA-5

In the following questions, all references to a receiver will be to the one discussed in this lesson and shown in the lesson figures.

1. Using the Motorola test set, positions 1, 4 and 6 have near zero readings, and the remainder of the readings are lower than normal. In what specific stage is the fault most likely to exist? ______

2. In aligning the receiver, the plate tank of the last 455-kc IF stage does not show any change in the meter reading of position 1. The "trouble" is: ______

3. When taking meter readings in the DC amplifier, the grid is always highly negative regardless of the setting of the controls. This indicates trouble in the following stages:

First audio ______ Discriminator ______ Second limiter ______ First limiter ______
High-frequency oscillator ______ Noise amplifier ______ Noise rectifier ______

4. A signal is being received from the base transmitter. The reading at position 4 is considerably off-center. The possible troubles are:

A. The transmitter carrier is off frequency ______
B. The receiver high-frequency oscillator is off frequency ______
C. The discriminator secondary is not tuned properly ______
D. First IF is misaligned ______

5. The squelch in a receiver is always closed regardless of the position of the controls. In making voltage measurements, the grid of the DC amplifier is always positive, but the second limiter grid is negative, as required. The noise rectifier tube is removed but this does not change the DC amplifier grid voltage. Which of the following applies?

A. The noise rectifier tube is defective ______
B. The noise amplifier stage is inoperative ______
C. The squelch control is not controlling the input to the rectifier stage ______
D. The coupling capacitor to the noise rectifier is leaky ______

6. With no signal applied and with the vehicle motor running, a mobile receiver reads "10" in position 4. With the correct channel signal applied, however, the reading at 4 is zero. Which of the following remedies might apply?

A. Readjust discriminator secondary for zero on noise ______
B. Realign the entire 455-kc section of the receiver ______
C. Noise balance the receiver ______
D. The receiver is satisfactory----no correction required ______

7. The positive and negative swings of the discriminator are not balanced, yet the reading at position 4 is zero on center frequency. The probable solution:

A. Realign the discriminator secondary ______
B. Realign the discriminator primary ______
C. Realign the 455-kc IF amplifier stages ______

8. In following the signal through a receiver, audio from the discriminator is applied to the grid of the 1st audio stage, but there is no audio signal at the plate of this stage. Possible reasons for this condition:

A. The squelch is not open ______
B. The 1st audio tube is defective ______
C. C158 in the plate circuit is completely open ______
D. R157 in the plate circuit is completely open ______

9. Which of the following can be used to determine whether the second oscillator is operating?

A. Measure voltage drop across R115 ______
B. Measure voltage drop across R116 ______
C. Remove the crystal and observe change in grid voltage ______
D. Remove crystal; reading at position 2 should decrease ______

10. While trouble shooting the receiver, it is discovered that the squelch does not open. (The 1st audio stage remains biased beyond cut-off.) With a signal applied and opening the squelch control, which of the following tests might apply?

A. Try a new 12AT7 (V114) tube ______
B. Try a new 6BJ6 tube in second limiter ______
C. Try a new 6C4 tube in the noise rectifier ______
D. R160 is open; replace R160 ______


national
MOTOROLA
RADIO COMMUNICATIONS
service

A TWO-WAY RADIO COMMUNICATIONS TRAINING PROGRAM

LESSON MA-6
MAINTENANCE

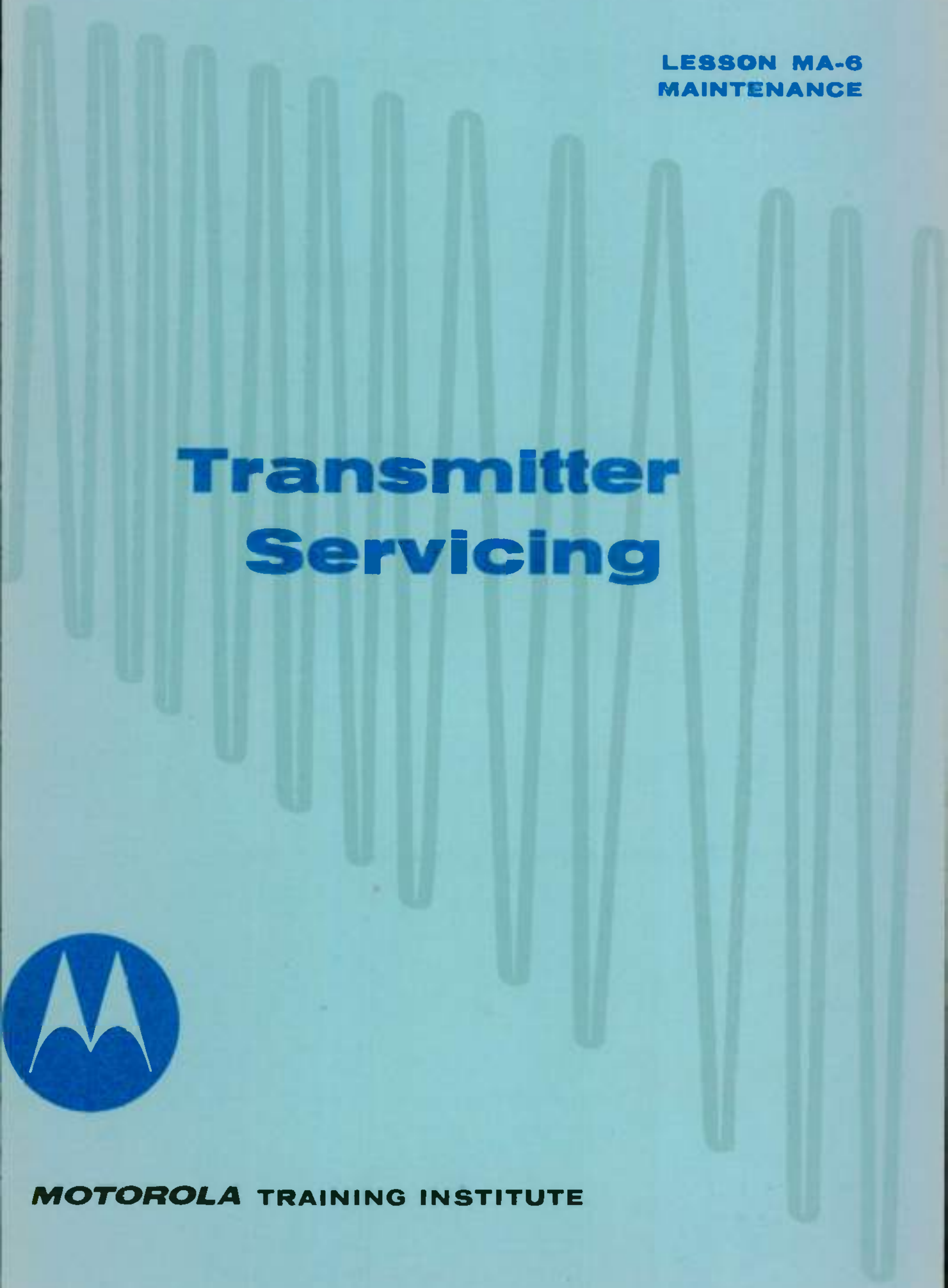

Transmitter Servicing

MOTOROLA TRAINING INSTITUTE

A TWO-WAY RADIO COMMUNICATIONS TRAINING PROGRAM

LESSON MA-6
MAINTENANCE

Transmitter Servicing

—one of a series of lessons on two-way FM communications—

MOTOROLA TRAINING INSTITUTE
4501 W. AUGUSTA BLVD., CHICAGO 51, ILLINOIS
APPROVED BY THE STATE OF ILLINOIS
DEPT. OF REGISTRATION AND EDUCATION

PREFACE

This is one lesson of a complete Motorola Home-Study Course which presents to the Service Technician both the principles of operation and the maintenance of two-way FM radio systems. The program covers mobile, portable and base station equipment, including the latest transistorized units.

TRANSMITTER SERVICING

Lesson MA-6

TABLE OF CONTENTS

NOTICE

Diagrams and figures referenced in text are "fold-outs" in back of each lesson, for use while studying. The Examinations are also there.

One Business Radio Service user is the company specializing in tire service. Large wheels on modern trucks and farm equipment need special handling tools. With radio, firms so equipped are able to provide special service.

TRANSMITTER SERVICING

Lesson MA-6

Introduction

In this lesson we shall discuss various techniques for servicing FM transmitters used in two-way communications. We shall proceed in the following order: (1) identification of a fault, pinpointing it to a particular section of the transmitter, (2) location of the specific trouble, and (3) correction of the trouble.

We shall be using the high-band transmitter shown in figures 1 and 2, but the trouble-shooting techniques applied to this unit will work equally well with other transmitters, particularly with the low-band units. Toward the end of the lesson, we shall discuss problems which apply only to certain specialized equipment, such as 450-mc transmitters.

Determining the Exact Trouble, Using the Motorola Test Set Only

When using the Motorola test set only, the serviceman will follow test procedures which are different from those he would use if he had more test equipment available. To start, let's assume that he has only the Motorola test set, and that the fault is definitely in the transmitter--both the antenna system and the power supply are normal.

RF Output

The first step when trouble shooting any transmitter is to observe the reading in the PA position of the test set. If this reading is high, the HI-LO switch must be placed in the LO position. Now observe the readings of test set positions 3, 4, 5, and 6 to get an over-all idea of the transmitter operation. If an intelligent appraisal is to be made, these readings must be compared both with the recommended values and with the values previously recorded for the transmitter, when it was operating normally.

The meter readings with the test set in positions 3, 4, 5, and 6 are used to check the preceding stages. Thus, if the reading at position 3 is normal, we know that the RF level at this point is normal. That is, the oscillator, modulator, buffer-doubler, and tripler input circuit are all operating as they should. (The frequency may be incorrect, but at this point in our procedure we are interested only in the amount of RF.)

The reading at position 4 checks the operation of the tripler stage and the input to the second doubler. If the reading at 4 is normal, try position 5. If the reading is still normal, proceed to position 6.

How do these meter readings help isolate the trouble? Let us suppose that the readings at positions 3 and 4 are normal, but that the readings at 5 and 6 are low. This tells us that the trouble is in either the second doubler or the input of the driver stage. The logical procedure is to try new tubes in these stages and to check the readings again. If normal readings are now obtained, merely touchup the alignment and your unit will be ready for use. If the readings are still low, however, more detailed trouble shooting will be required in these stages.

As another example, let us assume that all the readings are zero, or at least very low. (The reading at position 6 is never zero so long as the bias supply is applied to the grid circuit of the PA stage.) This means that the trouble is in one of the first three stages (oscillator, modulator or buffer) or that it is in the input to the tripler stage. Again the logical procedure is to try new tubes in these stages. (Try another crystal in the oscillator, too, if a suitable one is available.) If this procedure fails to correct the condition, further trouble shooting will be required.

When the reading at all positions (3 through 6) are normal, the next problem facing the technician is to determine if there is an RF output; and if so, to determine its approximate power.

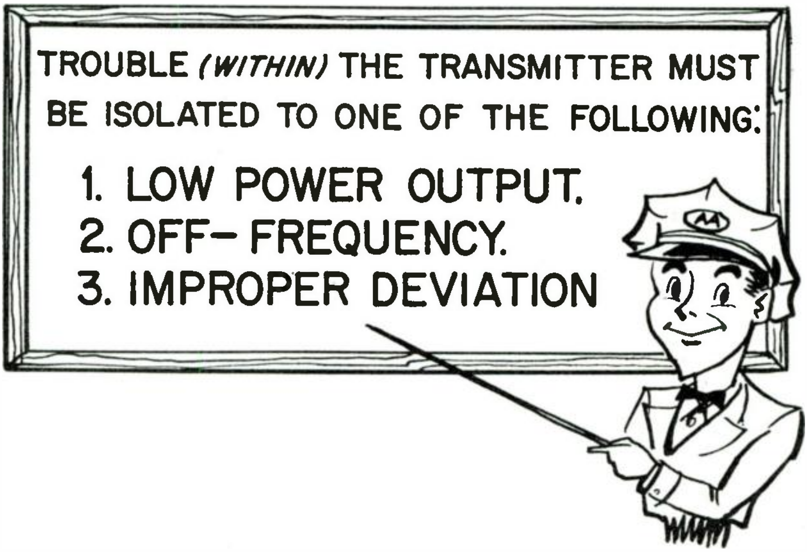

In Trouble Shooting the Transmitter Be Sure to Identify the Specific Trouble to be Corrected.

The meter positions provided in high-band and low-band transmitters do not show RF power output. The reading at position PA is an indication of the DC plate current only and is no guarantee of RF power. Only when the complete alignment procedure of the final tank, coupling and antenna circuits are followed, with normal results, can we be reasonably sure that the reading at the PA position shows the presence of RF power in the antenna. The test set responds to RF signals when used as a field strength meter, but it does not indicate the frequency or the amount of output.

Measuring Power Output

As we have just seen, measuring the power output of the transmitter becomes a problem when all the serviceman has available is the Motorola test set. If he is to provide quick and accurate service, he should be equipped with some means of actually measuring the RF output at the transmitter. Either a wattmeter or the Motorola dummy antenna (used with the test set) will serve this purpose.

Several types of wattmeters are available. Any type will suffice for determining the power output of the transmitter as long as it is reasonably accurate at the frequency involved. Using the Motorola dummy antenna, relative readings can be taken on the test set and the power can be accurately determined by means of the charts supplied. These instruments are easy to use when it is desired to measure the carrier power quickly. From the standpoint of isolating the trouble, the serviceman, as soon as he knows that the power output is normal, can concentrate on the operating frequency, the modulation, or any other faults that might exist within the transmitter.[1]

Even though the RF power output of a transmitter is known to be relatively normal, the transmitter itself may not be operating normally because (1) the carrier frequency is not on channel, or (2) the modulation is nonexistent, or at least very low.

Operating Frequency

The possibility that the carrier is off channel can be detected by means of a monitor receiver of known calibration, or by means of a frequency measuring device. If neither of these is available, the serviceman will be unable to determine the operating frequency of the transmitter.

Modulation

Metering facilities are not provided in the transmitter for measuring either the modulation or the audio input to the modulator. The newer TU546 test set, however, allows the audio voltage to be measured at the microphone, and this tells the serviceman that there is audio in the transmitter.

---

1. See Test Methods, section 2, pages 29-31.

Additional equipment is required in order to check modulation.

Isolating the Trouble--Monitor Receiver

We have just seen how a fault is isolated within a transmitter when using only a Motorola test set. A monitor receiver can also be used for making a quick check if the technician has one available. (We must assume that the monitor receiver picks up signals from other transmitters within the system and reproduces them with normal clarity.) The first step is to open the receiver squelch so that some noise is heard. The transmitter is then keyed and any noise quieting in the receiver noted. If there is some quieting, a carrier is present, although it may be weak or slightly off channel. The off channel factor is immediately checked by observing the test set reading at the discriminator secondary--it should be near zero. Although it is not advisable to adjust the transmitter frequency according to the reading on the receiver discriminator, this reading provides a good check on the approximate carrier frequency.

The monitor receiver also provides a check on any modulation taking place in the transmitter. If the carrier provides a reasonable amount of quieting in the receiver and if the carrier is reasonably close to the correct frequency, the receiver output will indicate the presence of modulation, whether weak, normal, or overdeviated. The receiver, however, will not give an accurate indication of the modulation if the carrier is too far off frequency. Again, the monitor receiver is not to be used to adjust the modulation of the transmitter; it merely gives the serviceman a relative idea of what is taking place. It enables him to quickly ascertain if there is trouble within the transmitter, and if it is one of the areas checked.

We have learned thus far how to isolate the trouble in a transmitter, pinpointing it to some particular stage or section. Once this has been done--and if the fault is not readily corrected by some simple adjustment or a replacement tube--it will be necessary to further analyze the faulty stages of the transmitter. In many instances the transmitter must be removed and placed on the test bench for this more complete analysis.

Trouble Shooting the Oscillator

Voltage and resistance readings, such as those shown in figure 1 for the 10-watt transmitter, are helpful in locating a defective component. This particular transmitter also provides for monitoring the oscillator activity (test meter position 2). The minimum reading is 10, but it will be higher than this in most cases. If the reading should drop below 10, however, the oscillator should be watched both for activity and for frequency.

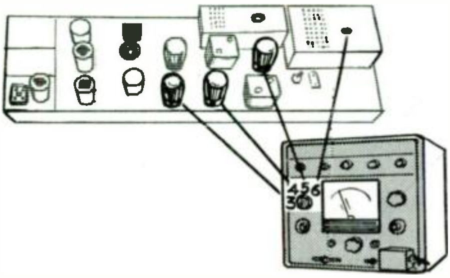

Test Set Measurements Help to Quickly Isolate "Low Output" Trouble to a Specific Stage of the Transmitter.

While the test-set reading at position 2 can be taken as an accurate indication of the amount of oscillator activity, it does not tell us how well the plate circuit of the oscillator operates, nor does it tell anything about the signal applied to the modulator or to the buffer-doubler. This information can best be obtained by measuring the voltage at the buffer grid, which is a good indication of the signal level. In figure 1, the voltage at the buffer grid is 2.5 volts negative. This serves, then, as an indication of the RF level, which is the output from the oscillator-modulator section. A VTVM equipped with an RF probe will also indicate the presence of RF. The probe may be used at the plate circuit of the oscillator and at the grids of the modulator and buff-doubler stages to determine the RF level at these points.

Low RF output from the oscillator may be caused by low supply voltages resulting from resistance changes in the plate and screen dropping resistors, open or leaky capacitors, a weak tube, or a poor crystal. In most instances a voltage and resistance check of the circuit and its components will reveal the defect, but occasionally it may be necessary to substitute new units and compare the results.

The Modulator

The modulator is basically a low-gain RF amplifier stage in which provision is made to phase modulate the RF signal in the output. The DC grid voltage is zero with respect to ground, and bias is supplied by a cathode resistor. Trouble shooting is accomplished by means of (1) voltage checks, (2) resistance checks, and (3) tests performed on the individual components.

Modulation deviation and linearity is determined to a considerable extent by the operation of the stage. It is therefore important to keep the voltages near their nominal values.

Looking at the schematic, we see an electrolytic bypass capacitor at the cathode. Its bypass quality may be poor without seriously changing the DC operating voltages. At the same time, however, the modulation characteristics of the stage could be poor; the modulation may be weak as well as distorted.

The Buffer-Doubler

The buffer-doubler is basically an RF amplifier which provides an output at twice the frequency of the input signal. The grid voltage is due both to the oscillator output and to the signal from the modulator. To provide good modulation linearity and a stable carrier frequency, the stage is operated with Class B_2 bias rather than Class C. (Class B_2 indicates operation near cut-off, with the grid driven positive by the signal.) Before performing any detailed trouble shooting, the serviceman should make sure that the grid drive (voltage) is correct.

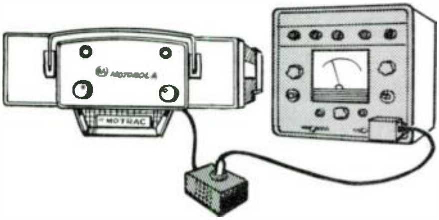

The Motorola Test Set and Dummy Antenna may be Used to Measure Transmitter Power Output.

Figure 1 shows no metering facility for the buffer-doubler, but the grid drive is checked by reading the negative grid voltage, which should be at least 2.5 volts for this particular transmitter. This grid voltage controls, to some extent, the voltages at the other tube elements. The action is as follows: The grid bias voltage limits the amount of plate current, and the plate current establishes voltage drops across the various resistors in the circuit. If the plate current increases, the voltage across the plate dropping resistor (R1) also increases, causing a lower potential at the plate. At the same time, the increased plate current through the cathode resistor increases the cathode voltage.

With the proper signal applied to its grid, the operation of the buffer-doubler stage may be determined by the reading at the grid of the following tripler stage (position 3). The maximum voltage at position 3 will be obtained only when the interstage transformer is peaked. This transformer has a tuned primary and a tuned secondary; as either is adjusted to resonance, a sharp maximum reading should result. If either the primary or the secondary fails to show a satisfactory peak, the circuits will not be properly tuned.

Tripler, Doubler and Doubler-Driver

These three stages all operate in much the same manner. As Class C amplifiers and frequency multipliers, they increase both the power and the frequency of the RF signal. Trouble shooting procedures for all three stages are essentially the same as that described for the buffer-doubler.

The RF output of each stage depends primarily upon the grid drive voltage. Therefore, the input signal to any stage must be normal before any further checks are made. The RF output of each stage is conveniently measured at the grid of the following stage. Each stage provides some reserve drive to the next stage. That is, the grid drive is more than the minimum amount needed to produce the required output. Thus, while the readings given in figure 1 are satisfactory, it is desirable to have more than this nominal amount in order to counteract the normal decreases that occur as the equipment ages.

These three multiplier stages incorporate pentode type tubes because they offer high gain with minimum drive. Screen voltages must be correct if full power output is to be realized. The screen voltage greatly affects the amount of plate current, and in a Class C amplifier or multiplier the power output is generally a direct function of the amount of plate current and the amount of grid drive.

It should never be necessary to make any change in the circuitry or in the value of a component in order to obtain correct drive voltages. If the recommended readings are not obtained, look for a defective component. Neither should interstage coupling be changed. Occasionally it would appear that the degree of coupling (between doubler-driver and PA, for example) could be changed by altering the relative position of the primary and secondary winding. This must not be done, however, for although it may seem that the amount of grid drive could thus be increased, this is not always the case.

The driver output (or the input to the PA) may increase in undesirable harmonics, but not in desired signal. The spurious emission may also exceed the maximum allowed. (The 450-mc transmitter is an exception to this rule, however. Here the interstage coupling is variable and must be adjusted according to the recommended procedure.)

Power Amplifier Problems

The various adjustments and alignments required in the PA stage make it one of the most critical sections of the transmitter. It is subject to more damages as a result of misalignment because of its high power level and its tubes are the most expensive in the transmitter. It is thus advisable to minimize tube replacement by making sure that they are always operating properly.

Plate current is controlled by the grid voltage, the screen voltage, the plate voltage and the plate tank, also by the antenna loading adjustments. To prevent the plate current from becoming excessive (in case the grid drive should fail), fixed bias is applied to the grid at all times. Moreover, a "High-Low" switch is usually incorporated in the screen grid circuit.

This switch permits lowering the screen voltage by inserting a higher resistance in the screen circuit when the plate circuit is not properly tuned. If the final stage is not operating properly, the switch is immediately placed at "Low" and left in that position until servicing and tuning are completed.

When the grid drive is normal, the stage is biased Class C. Unless the plate circuit is tuned to resonance, however, the current may still be too high; hence, the switch is left at "Low" until the plate tank is adjusted to resonance.

If the PA grid drive fails, the fixed bias will keep the plate current from rising beyond the safe limits for the tube. With no RF in the plate circuit, the tuning of the plate tank has no effect on the plate current--and there can be no coupling to the antenna if there is no RF present. With no RF power present, coupling adjustments will have no affect on the plate current.

Trouble is quickly pinpointed to either the grid circuit or the plate circuit by observing the meter readings at position 6 for the grid, and at the PA position for the plate. It can also be isolated by observing the peaks when the circuits are tuned through resonance. (When the final is loaded by the antenna, the plate current peak will be very broad.)

Voltage readings for the final stage will help to pinpoint any trouble to the defective portion of the circuit. Resistance readings are also very helpful, especially in locating resistors that have changed value.

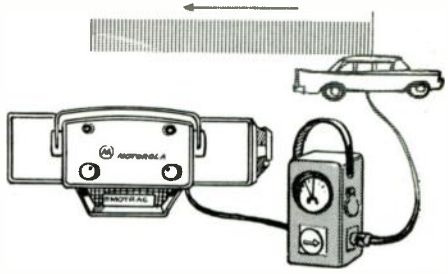

If a Thruline Output Meter is Used, the Transmission Line Should Terminate into the Antenna.

Reduced RF output (assuming that the input is normal) may be caused by a weak tube, low supply voltages, improper tuning, a defective component, or any combination of these factors. Each possibility should be checked thoroughly in any logical trouble shooting procedure. If the grid drive is normal, the tube may be replaced by one known to be good and the results compared. The final tube will often show a slight "glow" around the glass envelope. A slight glow may be normal and does not necessarily indicate a defective tube or excessive current. In low-power transmitters (such as the 10-watt unit), the PA tube is less apt to show this glow than when this same tube is operated with higher voltages to produce power outputs of 25 watts or more. If the tube becomes gassy (or "soft," as it is often called), there will be a glow around its electrodes and this glow will extend over the greater portion of the tube. This will generally indicate a defective tube (low power output) and the tube should be replaced. Operating a tube beyond the recommended values of plate and screen current will often make it prematurely soft and shorten its life.

The Audio Stages

The audio stages in the transmitter of figure 1 are the audio amplifier and the clipper. Where transistorized microphones are used, the transistor amplifier must be considered as part of the audio section of the transmitter, even though the amplifier itself is mounted in the microphone housing.

Misadjustment of the "instantaneous deviation control" (IDC) can produce bad effects, both in the operation of the system and in the interference produced in other channels. Because of the great importance of this circuit, the serviceman must be careful to establish its proper operation and maintain a proper adjustment of the control (R130) at all times.

Once the input signal reaches a certain predetermined level, the output voltage no longer increases. By driving the diodes in the clipper stage to maximum plate current, the output voltage is limited in amplitude; stronger audio voltages cannot produce higher voltages from the clipper. In most transmitters the maximum input level without causing clipping is 0.18 volt at the grid of the amplifier (0.25-volt signal at the input if the tap at position 1 is used). Before proceeding to adjust the IDC control for the correct amount of deviation, the modulation sensitivity must be correct. That is, with 0.25 volt applied to the input, the peaks of the signal reaching the 6AL5 should be at the point of clipping.

To check the modulation sensitivity, place a VTVM between terminal 2 or 7 of the 6AL5 socket and ground, using the lowest practical DC scale. The standard test signal for the audio section of the transmitter is 1000 cps, and this signal should be applied to the transmitter input. As the input is increased and approaches 0.25 volt, a slight wiggle will be observed on the meter, indicating that the peaks of the signal are being clipped. If the input is further increased, the meter reading will decrease.

The point at which the meter shows the slight wiggle is the clip level. While this is 0.25 volt for most transmitters, the service manual should always be consulted for verification; some transmitters use different values for their modulation sensitivity.

Microphones sometimes have outputs of 0.18 volt. When this is the case, the input coupling capacitor is connected to the alternate tap, allowing the full voltage to reach the audio amplifier input.

Measuring Deviation

In order to determine the amount of deviation, it is necessary to use a suitable deviation meter. With a 1000-cps sinewave signal at the input, the deviation should be set to a full 15 kc (or to 5 kc, when that value applies). When the input is not a true sinewave (voice modulation, for example), the deviation is adjusted for an indication of about 12 kc, using a sustained voice tone such as Ah-h-h-h-h--. Then, when we speak into the mike, the peaks should reach 10 kc on the deviation meter.

The scope, when used in conjunction with a deviation meter, becomes a most accurate indicator of deviation. It must first be calibrated, however. This can readily be accomplished with a deviation meter, using a signal which is below the clip level. The 1000-cps signal is applied to the audio section so that the deviation is 10 kc on the meter. The scope vertical gain is then adjusted for a convenient deflection, such as 10 squares, on the scope screening. (The scope controls must now remain in the same setting for the rest of the check.)

Since the deviation is increased by increasing the input voltage, the IDC circuit will eventually start clipping the amplitude, but the indications of the deviation meter and the scope may not agree. While the scope will show the true peak deviations, the deviation meter responds to the average deviation; its scale is marked according to the corresponding peak value rather than the average. This meter reading is accurate only so long as the input signal is a sinewave, and not clipped. As soon as the signal deviates from the sinewave, however, the peak will no longer have the same relative value with respect to the average value, and the deviation reading may not represent the true peak.

This does not mean that the deviation meter is not satisfactory for setting the deviation of the transmitter. The difference or error is very low for deviation values through 15 kc, and the error becomes significant only when the IDC circuit goes into full limiting.

The Motorola Monitor Measures Both Frequency and Deviation.

The foregoing discussion was based on an input signal of 1000 cps. Where the signal frequency is lower and clipping occurs, the average energy will be less in comparison to the peak than for the 1000-cps input. Thus, where a low-frequency signal is used, the deviation indicated by the meter for a clipped condition is likely to be lower than that recorded on the scope.

From the preceding discussions, we see that there are several factors that must be taken into consideration when trouble shooting the audio section of the transmitter. First and foremost is modulation sensitivity. If the modulation sensitivity is low, it should be corrected in the amplifier section rather than by advancing the IDC control. If the IDC control is advanced, there may not be an immediate change in the operation of the transmitter. If the control is advanced, however, because the amplifier gain is low, and then later the amplifier gain is restored to normal by replacing a weak tube, the IDC control must again be adjusted for correct deviation.

Another example of improper service procedure has to do with a weak mike. The serviceman finds that the modulation of the transmitter is weak and, rather than doing a little trouble shooting and finding out the reason, he merely advances the IDC control. This means that the audio input may never reach the clip level, and there may be no IDC action. Moreover, the weak mike eventually becomes inoperative and it must be replaced. The serviceman will be guilty of an error of omission if he fails to recheck the deviation. The output is good and loud, he reasons, so why worry about the amount of deviation! The deviation is now beyond the bandwidth of the receivers in the system and the Permakay filter in the receiver prevents some of the sideband energy from getting through to the discriminator. This results in a distorted output and a consequent sacrifice in quality. The excessive deviation also produces a lot of sideband energy which falls in the adjacent channels and interferes with systems operating within these channels.

If the modulation sensitivity is not up to par, either the amplification of the audio stage is low or the clipper is not working properly. A further check of these stages should disclose the specific trouble.[2]

Transmitter Alignment

The alignment procedure of any transmitter must include three steps: (1) the RF circuits must be adjusted so that the correct amount of power is delivered to the antenna, (2) the transmitter must be placed on the proper frequency, and (3) the modulation (deviation) must be correct.

To obtain the proper RF signal at the antenna, all of the circuits between the oscillator and

---

[2] See Test Methods, section 2, pages 53, 54 and 57, also section 3, pages 34-36; also see "Let's Measure Modulation," reference M-6.

antenna must be tuned to their correct frequency and the coupling must be properly adjusted between the PA stage and the antenna. The circuits from oscillator to PA are tuned for maximum indications at the grids of the following stages. The PA plate tank is adjusted for minimum plate current. After the plate tank is tuned, the antenna coupling circuits are adjusted to obtain the proper amount of RF in the antenna (determined by the amount of plate current).

The service manual lists certain normal readings for each stage of the transmitter. Unless these readings are obtained, it is not advisable to proceed with the rest of the alignment, for the proper operation of each stage depends upon the grid drive from the preceding stage.

The actual power output of the transmitter cannot be accurately determined merely by knowing the amount of plate current in the PA stage. Power output is best measured by means of an accurate wattmeter connected between the transmitter and antenna. Instead of the antenna, a dummy load of the proper impedance may be used with the wattmeter. This wattmeter should read both forward and reverse power, particularly if it is terminated into the regular antenna system. A transmitter may fail to load properly because of a defective antenna system, and this is readily detected by means of the forward-reverse power readings on the wattmeter.[3]

This Portable Motorola Meter Accurately Measures the Frequency and Deviation of Transmitters, between 20 and 100 MC.

The frequency of the transmitter is determined basically at the oscillator. An adjustment at the oscillator stage provides for placing the transmitter at the correct frequency. By monitoring the transmitter output with a frequency meter the oscillator can be warped until the transmitter frequency is correct. The reliability of this procedure is limited only by the accuracy of the frequency-measuring device.[4]

Deviation measurement requires the use of a special meter to monitor the transmitter output during modulation.

Besides the general alignment procedure discussed in this lesson, specific recommendations for the individual transmitter must be followed in detail, particularly in the loading procedure for the

---

3. See Test Methods, section 3, pages 17-25.
4. See Test Methods, section 2, pages 32-39 and section 3, pages 10-15.

final stage. Unless the loading is correct, the final tubes may overheat and fail prematurely. Recommended procedures must be followed, also, in order to provide the specified amount of RF power output from the transmitter, with minimum harmonic radiation.

Parasitics

Parasitics, when encountered in transmitters, are usually recognized by the radiation of abnormal signals, signals which are not normal for the transmitter. The reading at position 6 (the final grid) is likely to be abnormally high and the tuning of the circuits erratic. The power output is usually low when measured on a wattmeter, and erratic when the final is loaded by the antenna or by a dummy load.

Further evidence of the existence of parasitics is the overheating of components, particularly the parasitic suppressors! Severe parasitic oscillations may even cause the suppressors to burn up.

One method of determining the presence of parasitic oscillations is to remove the drive from the final stage momentarily, while observing the behavior of the final grid and plate circuits. If the oscillations are strong, the wattmeter may indicate some power output.

The most common causes of parasitic oscillations are defective bypass capacitors, and stages improperly neutralized. (It is essential that the neutralization procedure recommended by the manufacturer be followed in every detail.) Another likely source of parasitics is the final amplifier tube itself.

450-MC Transmitters

Before discussing troubles which may be associated with 450-mc transmitters, it is necessary to say something about circuit variations which may alter the trouble shooting and alignment procedures. This is the case where a metering circuit has been provided for measuring the power output. The meter does not give a quantitative indication of the power, but it does show peaks. It provides a means of tuning the final stage and loading the transmitter into the antenna the same as if a wattmeter were used.

Some 450-mc transmitters have a modulation sensitivity of 0.1 volt, which means that only this amount of voltage is required at the input terminals in order to cause the necessary deviation.

Another unique feature (in some 450-mc Motorola transmitters) is the use of variable coupling between the driver and final stages. Normally this coupling is fixed in

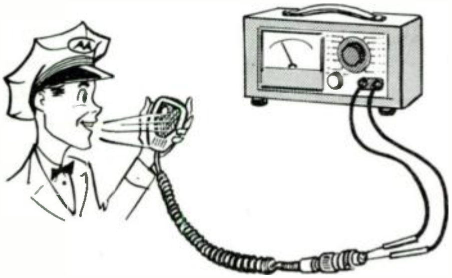

Establishing the Amount of Mike Voltage--As Measured on a Sensitive AC Voltmeter--is Helpful in Diagnosing Modulation Problems.

the transmitter, but it is desirable for it to be variable in certain instances, to obtain optimum operation of the final stages.

One of the most common complaints in connection with 450-mc transmitters concerns low power output. This is sometimes caused by the 2C39 tubes used for the final stages of some high-frequency transmitters.

When the power output is low, the first thing to check is the drive to the final and to the preceding stages. There is little reserve drive in the final stages; unless the driving voltages are up to par, the final cannot develop full power output. The final stage in Motorola transmitters is driven by a tripler stage, and the drive to this tripler is very critical. It is just as important to avoid overcoupling in this stage as it is to secure sufficient coupling. The coupling to the tripler grid is thus made variable and it must be properly adjusted by the serviceman.

The tripler coupling to the final stage can usually be set at maximum, provided no limit is specified in the alignment procedure. (This will vary from one model to another.) With the input to the final stage known to be satisfactory, the tuning and antenna loading procedures are checked. Then, if it is still impossible to obtain normal power output, a new tube should be tried in the final. The tripler-driver and the final use the same type tube in Motorola 450-mc transmitters, and these tubes can be interchanged for the purpose of comparing the power output. It is common for the final tube to operate satisfactorily in the driver stage even though it may not give full power output in the final stage.

Low power output may also be caused by low supply voltage, either filament or plate, and this possibility must never be overlooked. Another possible source of trouble is the contacts of tube filaments. Filament power is applied through these spring connectors, so they must make good contact. Poor contact causes loss of power and overheating. Low power output may be traced to defective bypass capacitors in the grid and plate circuits. These capacitors often make use of mica sheets which are held to the chassis by screws. If these screws should become loose, the capacitance is reduced and the power output decreases. The remedy is to simply tighten the screws. The ground return of the various coupling loops may be making poor contact with the chassis because of the accumulation of dirt. This also is a possible cause of low power. The remedy is to clean the ground contact.

250-Watt Transmitters

Quarter-kilowatt transmitters use an ordinary 30-60 watt transmitter as the driving section for the high-powered final. In most instances, the problems encountered are due to misaligned final stages.

Neutralization is one of the most important factors in the tuning of 250-watt finals. This is required with both low-band and high-band units but not with the 450-mc transmitter, which is fixed-neutralized. No particular alignment, adjustment, or neutralization procedure is applicable for all models of 250-watt transmitters; the step-by-step instructions provided by the manufacturer must be consulted for each model.

The antenna change-over relay may sometimes become a source of trouble, especially when its contacts become pitted or charred because of the higher RF power handled.

In working with transmitters, particularly high-powered units, the serviceman must exercise unusual care to avoid coming into contact with "hot" circuits. The high-voltage warning must be observed at all times. It is well for the serviceman to be thoroughly familiar with normal safety measures and first aid procedures.

STUDENT NOTES

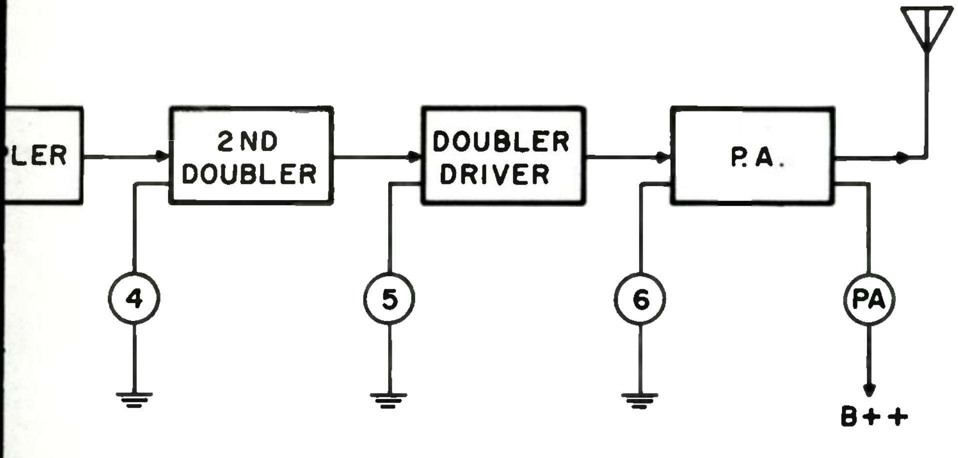

RE 2

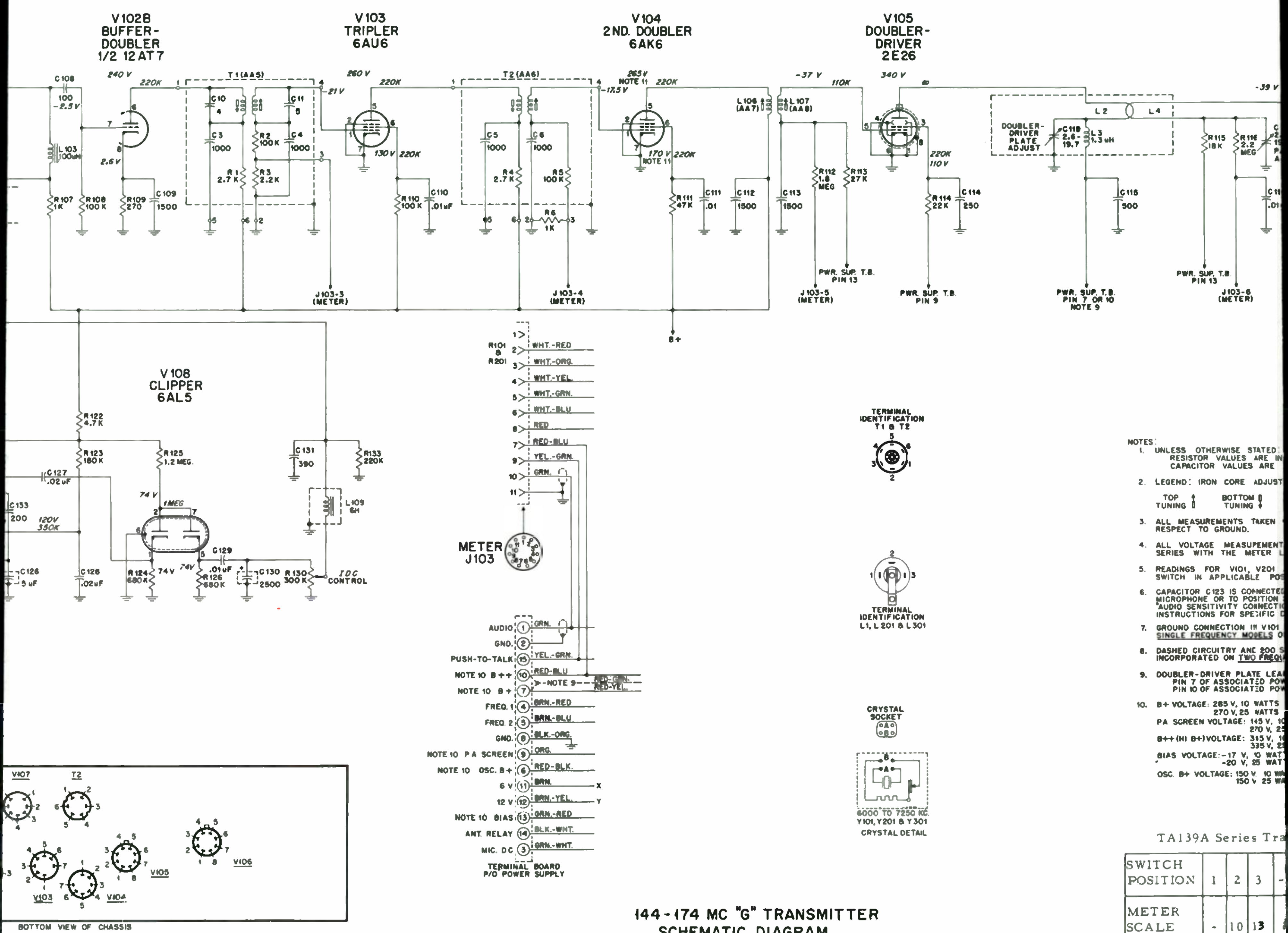

NOTES:

1. UNLESS OTHERWISE STATED:
   RESISTOR VALUES ARE IN
   CAPACITOR VALUES ARE

2. LEGEND: IRON CORE ADJUST
   TOP TUNING BOTTOM TUNING

3. ALL MEASUREMENTS TAKEN
   RESPECT TO GROUND.

4. ALL VOLTAGE MEASUREMENT
   SERIES WITH THE METER

5. READINGS FOR V101, V201
   SWITCH IN APPLICABLE

6. CAPACITOR C123 IS CONNECTED
   MICROPHONE OR TO POSITION
   "AUDIO SENSITIVITY CONNECTI
   INSTRUCTIONS FOR SPECIFIC

7. GROUND CONNECTION IN V101
   SINGLE FREQUENCY MODELS O

8. DASHED CIRCUITRY AND 200
   INCORPORATED ON TWO FREQ

9. DOUBLER-DRIVER PLATE LEA
   PIN 7 OF ASSOCIATED PO
   PIN 10 OF ASSOCIATED PO

10. B+ VOLTAGE: 285 V, 10 WATTS
    270 V, 25 WATTS
    PA SCREEN VOLTAGE: 145 V,
    270 V,
    B++ (HI B+) VOLTAGE: 315 V,
    335 V,
    BIAS VOLTAGE: -17 V, 10 WAT
    -20 V, 25 WAT
    OSC. B+ VOLTAGE: 150 V 10
    150 V 25

TA139A Series Tra

SWITCH POSITION	1	2	3
METER SCALE READING	-	10	13

144-174 MC "G" TRANSMITTER SCHEMATIC DIAGRAM

FIGURE 1

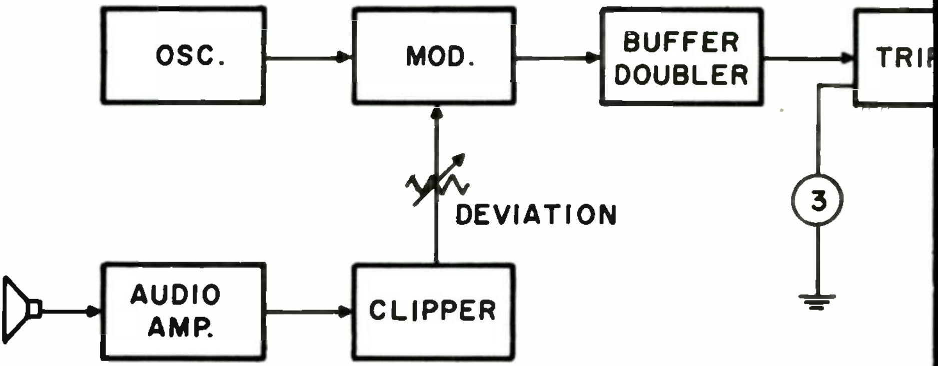

FIGU

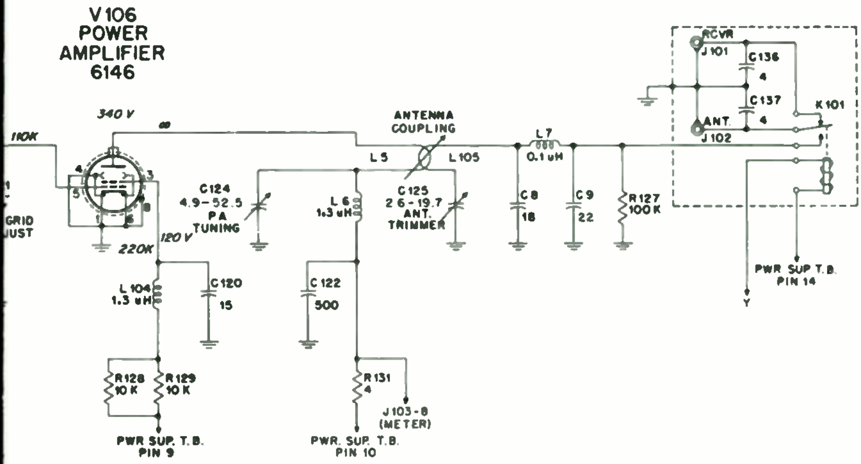

OHMS, ±10%, 1/2 WATT. K=1000 OHMS.
N MICROMICROFARADS.

ENTS:

TOP OR
BOTTOM TUNING ↕

ITH A VACUUM TUBE VOLTMETER WITH

TAKEN WITH A 1MEG RESISTOR IN
AD.

ND V301 TAKEN WITH FREQUENCY
TION.

TO POSITION 1 FOR PALM TYPE
FOR HANDSET INPUT. REFER TO
NS IN THE TRANSMITTER
TAILS.

ATHODE CIRCUIT USED ON
LY.

RIES COMPONENTS ARE
NCY MODELS ONLY.

(RED-GRN.) IS CONNECTED TO:
ER SUPPLY FOR 25 WATT APPLICATIONS;
ER SUPPLY FOR 10 WATT APPLICATIONS.

F POWER.
F POWER.
WATTS RF POWER.
WATTS RF POWER.
WATTS RF POWER.
WATTS RF POWER.
S RF POWER.
S RF POWER.
TS RF POWER.
TS RF POWER.

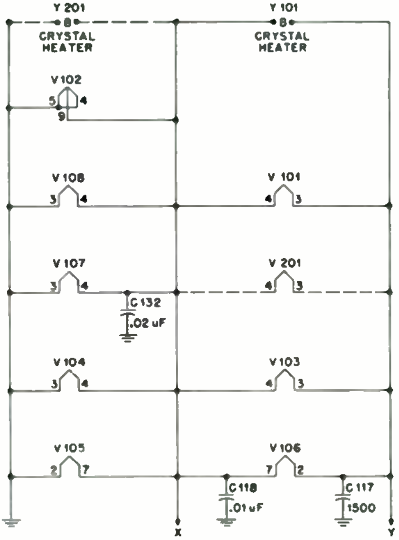

nsmitters (10 Watts)

4	5	6	7	8	PA (÷4)
[illegible]	16	11	17	*	25

STUDENT NOTES

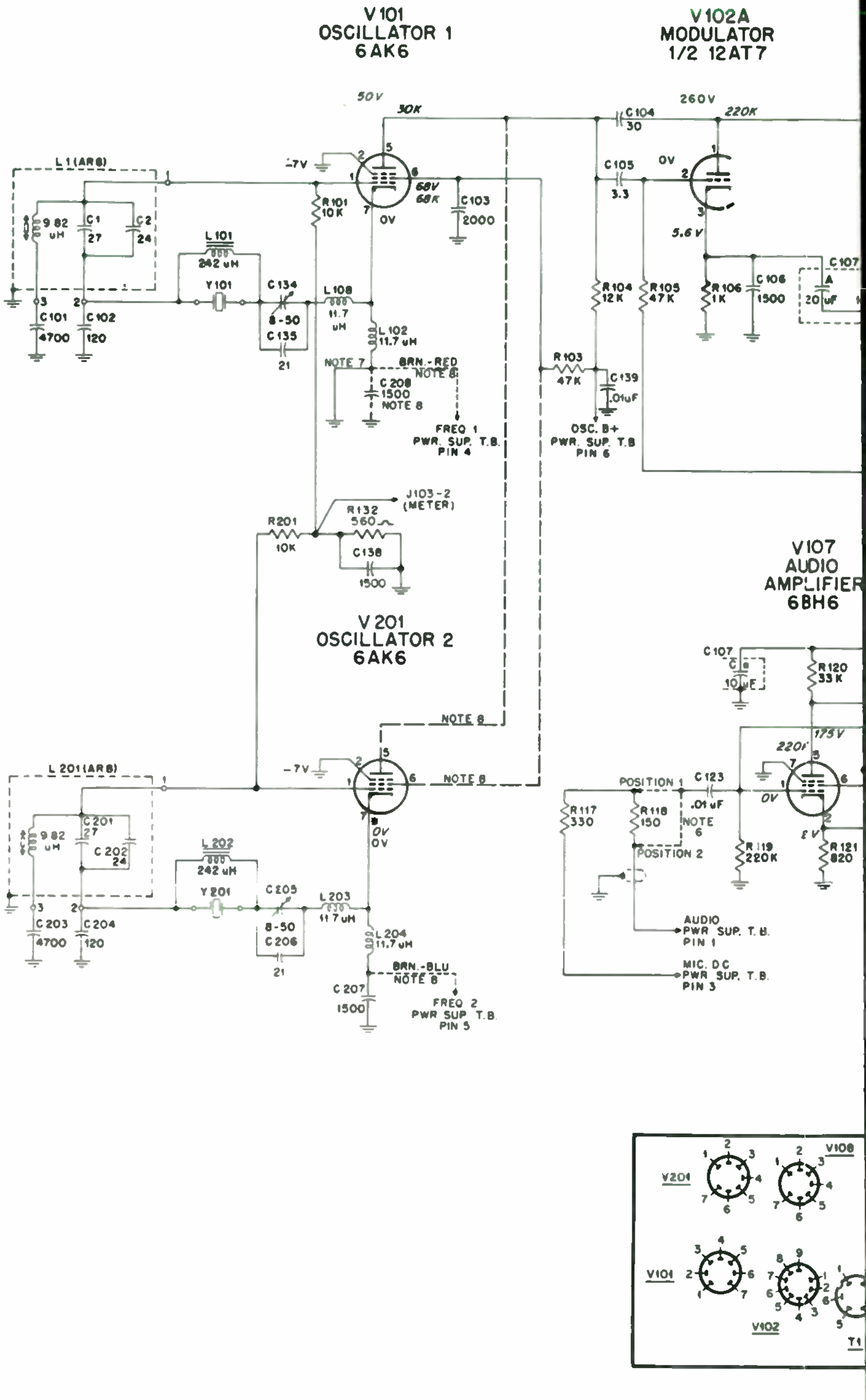

Motorola Training Institute

4501 West Augusta Blvd., Chicago 51, Ill.

Please PRINT or use STAMP

Name ______________________ **Student No.** ______

Street ________________ **Zone** ____ **Date** ______

City ______________ **State** _______ **Grade** ______

EXAMINATION LESSON MA-6

1. Which of the following may be used to determine if there is any output from a transmitter?

(A) Wattmeter ________ (B) Motorola dummy load (and test set) ________ (C) Field strength meter ________
(D) Position 6 of test set ________ (E) Monitor receiver ________

2. The purpose of the HI-LO switch of the transmitter is

A. To reduce the shock hazard when working on the equipment ________
B. To prevent excessive currents in the final tube ________
C. To enable the operator to properly load the antenna ________
D. To prevent desensitization of the receivers ________

3. When checking a Motorola transmitter, the reading at position 6 on the test set is zero. Which of the following statements are probably true?

A. There is no drive to the final stage ________
B. The final platetank is too heavily loaded ________
C. There is no fixed bias ________
D. No modulation is being applied from the microphone ________

4. There is no method by which the Motorola test set can be used for checking transmitter deviation.

TRUE ________ FALSE ________

5. In figure 1 of the lesson, the test set reads zero at position 3. Check the stages which may be at fault.

Oscillator ________ Modulator ________ Buffer-Doubler ________ Tripler ________ Second Doubler ________
Audio Amplifier ________ Clipper ________ Driver ________ Power Amplifier ________

6. In figure 1, positions 3 and 4 on the test set read normal, position 5 reads low and position 6 also reads low. The fault is likely to be in either the ________ or the ________.

7. A transmitter shows normal readings in all meter positions, the antenna loads normally, and the antenna system is known to be good. Nothing is heard in the receiver, however. The probable trouble is ________ or ________

8. When loading a transmitter antenna, the antenna does not receive full power as recorded by a wattmeter connected between the transmitter and the transmission line. Indicate all of the following which may be causing the trouble:

A. The final tube is weak ________
B. The antenna system is defective ________
C. The carrier frequency is slightly off channel ________
D. The microphone output is weak ________

9. In trouble shooting the transmitter of figure 1, the grid of the Buffer-Doubler shows a positive voltage. What specific unit might be causing this indication? ________

____

10. Referring to figure 1 of the lesson, the reading at position 3 is normal, but positions 4 and 5 read zero. A new 6AU6 tube does not affect these readings. The voltage at the screen is near normal, but the 6AU6 plate voltage is zero. Which of the following could cause this condition?

A. Transformer T2 shorted, primary to secondary ________
B. Primary T2 is open ________
C. R4 has changed value to 1500 ohms ________
D. C5 is completely shorted ________


national
MOTOROLA
RADIO COMMUNICATIONS
service

A TWO-WAY RADIO COMMUNICATIONS TRAINING PROGRAM

LESSON MA-7
MAINTENANCE

Test Equipment

MOTOROLA TRAINING INSTITUTE

A TWO-WAY RADIO COMMUNICATIONS TRAINING PROGRAM

LESSON MA-7
MAINTENANCE

Test Equipment

—one of a series of lessons on two-way FM communications—

MOTOROLA TRAINING INSTITUTE
4501 W. AUGUSTA BLVD., CHICAGO 51, ILLINOIS
APPROVED BY THE STATE OF ILLINOIS
DEPT. OF REGISTRATION AND EDUCATION

PREFACE

This is one lesson of a complete Motorola Home-Study Course which presents to the Service Technician both the principles of operation and the maintenance of two-way FM radio systems. The program covers mobile, portable and base station equipment, including the latest transistorized units.

TEST EQUIPMENT

LESSON MA-7

TABLE OF CONTENTS

NOTICE

Diagrams and figures referenced in text are "fold-outs" in back of each lesson, for use while studying. The Examinations are also there.

Building contractors, ranging from plumbers to roofers, find that two-way radio enables continuous management supervision. Workmen's efficiency is also increased by the ability to closely control schedules, vehicles and supplies.

TEST EQUIPMENT

Lesson MA-7

Introduction

In this assignment we shall discuss those pieces of test equipment which are used in servicing two-way FM communications equipment. Our study will include the operation of frequency meters, deviations meters, signal generators and wattmeters, and some thought will be given to the application of the oscilloscope and AC voltmeter.

It will be recalled that the FCC requires frequency and deviation measurements of each transmitter to be taken at least once every six months. The serviceman must therefore be able to use these instruments intelligently. We shall begin our discussion with the frequency meter.

Frequency Meters; Motorola Monitor

It is only fitting that we should start with the Motorola FM Station Monitor. This instrument serves both as a deviation meter and as a frequency meter, but for the moment we will be concerned only with the frequency measuring function.

The Motorola FM Station Monitor is available in two models (for high and low bands, respectively) but the principle of operation is the same for either. Thus, while we shall be discussing the use of this instrument for high-band measurements, its use for low-band measurements will follow the same principles.

The first step is to check the 5-mc calibrating crystal oscillator of the instrument against the highly stable signal of station WWV, operated by the Bureau of Standards. A WWV receiver is included for this purpose. Depending upon the location, the WWV signals of 5 and 10 mc or of 10 and 15 mc are used.

Figure 1A shows a block diagram of the arrangement. The WWV receiver is first tuned for station WWV. The 5-mc oscillator is then adjusted to zero beat with WWV. By exercising care in this adjustment, the oscillator can be held to within one or two cycles of 5 mc.

The second step is shown in figure 1B. The WWV receiver is turned off and the 5-mc oscillator switched to the input of the control receiver--which is to be tuned to 150, 155 or 160 mc.

Let's assume that the receiver frequency is 150 mc. The receiver is calibrated at exactly 150 mc by tuning it for zero discriminator output on the 30th harmonic of the 5-mc oscillator. Even with an oscillator variation of a few cycles (multiplied 30 times), the 150-mc receiver will still be within 100 cycles of exact frequency. For all practical purposes, this error is insignificant.

The Proper Test Equipment is Essential to Quick and Intelligent Service of Two-Way Radio Equipment.

Before making any frequency measurements, we must determine the frequency of the crystal which is to be used. This will depend on (1) the frequency of the transmitter to be measured, and (2) the frequency of the control receiver. Let us assume that we wish to measure the frequency of a transmitter operating at 152.5 mc and that our control receiver frequency is 150 mc. The difference frequency between the transmitter (152.5 mc) and the control receiver (150 mc) is 2.5 mc. This is the required crystal oscillator frequency (step 3, figure 1C). Step 4 figure 1C shows the actual measurement of the RF frequency. A crystal of the required frequency (as determined in step 3) is substituted (by means of a switch) for the 5-mc crystal in the oscillator. The signal is then mixed with the carrier frequency being measured, and the output applied to the control receiver. The carrier (assumed to be exactly 152.5 mc) beats against 2.5 mc and the difference is 150 mc, the frequency of the standard receiver. The discriminator output will be zero, indicating that the carrier is at its exact channel frequency.

If the RF is not on exact channel frequency, however, the signal input to the control receiver will be off by the same amount, and this will be recorded by the meter. For example, suppose the RF frequency is actually 152.502 mc. When this beats against the 2.5-mc oscillator the difference frequency is 150.002 mc and this signal, when applied to the 150-mc receiver, will produce a difference of 2 kc at the discriminator. The calibrated meter will record a + 2-kc variation.

If the 2.5-mc crystal oscillator is off frequency, there will be an error in the frequency recorded even though the RFis at the exact channel frequency. Thus the accuracy of the measurement depends upon the accuracy of the crystal. Let's see just how much the crystal affects this accuracy. Suppose the crystal has a guaranteed accuracy of .002 per cent. This means that the 2.5-mc oscillator will be within 50 cycles of 2.5 mc (2,500,000 times .00002). Beating this oscillator directly against the RFsignal means that the difference frequency must be within 50 cycles of its proper frequency. Now 50 cycles, as far as 152.5 mc is concerned, represents a variation of only .000033 per cent. Thus the monitor for this particular measurement is extremely accurate. The "improvement" in accuracy from that of the crystal to that of the RF being measured is determined by the ratio of the RF frequency to that of the crystal. Thus 152.5 mc to 2.5 mc represents an improvement of 61 to 1. Where the selected crystal frequency is higher than 2.5 mc, the improvement factor will be correspondingly less. The improvement will be less for low-band monitors than for high-band monitors, because of the lower RF frequency.

Besides frequency measurements, the FCC also requires a routine check of the transmitter deviation. The Motorola Monitor can be used for this purpose, the deviation-measuring system being as follows:

The deviation meter of the monitor is located at the output of the audio section of the standard receiver; hence the output voltage will vary with the gain of the audio stages. Internal calibration is provided, however, in order to insure that the recorded deviation is correct. The output of an internal audio oscillator is set to a predetermined level (as measured by the meter), and the gain of the audio section is then adjusted by applying this known audio voltage to the audio amplifier and setting the volume control for a specified output voltage. In this manner the gain of the entire audio section is maintained at the correct level, and the deviation shown on the meter will be correct. The procedure (fig. 2) is as follows:

First adjust the oscillator output for the correct voltage. This is done by connecting the deviation meter to the output of the oscillator, and adjusting the oscillator output to a specified level. This level will vary with each instrument, but a tag will be found on the unit which provides the correct reading. The next step is indicated in figure 2B. The audio oscillator is applied to the receiver audio section, and the meter is placed at the output. The volume is then adjusted for a 15-kc deviation reading on the meter. With the input and output voltages known, the correct audio gain of the receiver is established. Thus the meter will indicate accurately the deviation of the incoming RF signal, for the audio output of the discriminator is determined by the deviation of the signal into the discriminator and this discriminator output is applied to the audio section of the receiver.

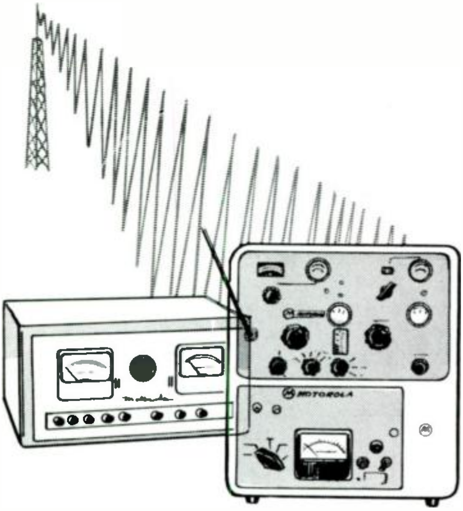

Either the Motorola Monitor or the Frequency Meter may be Used to Determine the Frequency of a Transmitter.

The RF is now applied to the monitor. This procedure is much the same as for frequency measurements, but the controls have now been adjusted to show the amount of deviation. The manner of adjusting the transmitter control will differ according to the type of test modulation, whether sinewave or voice. The instruction manual for the instrument should be consulted. It should be kept in mind that the monitor meter movement responds to average readings of the applied signal, although the meter dial is marked in peak deviation. When the modulation signal is sinusoidal, the peak and average readings have a normal relationship and the meter reading is accurate. In the case of nonsinusoidal modulations, however, the actual peak deviation may not coincide with that shown on the meter.

Pursuing this subject further, only when the audio voltage is a sinewave will the relationship between the average value and the peak value result in a correct meter indication. The average and peak values of other waveforms may have different relationships and the peak indication shown on the meter will not necessarily be the true peak deviation. This must be taken into consideration when using the Motorola Monitor for measuring deviation (and adjusting the transmitter modulation).[1]

Depending upon the equipment available and the type of modulation, there are several different procedures for measuring deviation. We shall discuss them briefly.

Assuming that we are to use the Motorola monitor to measure deviation (of a Motorola G-type transmitter) resulting from voice modulation, we introduce a sustained "Ah-h-h-h-h" of good volume at

---

[1] See reference M-6, "Let's Measure Modulation."

the transmitter microphone. The reading on the monitor meter should be about 12 kc. When we talk into the microphone, the average deviation will read about 7 kc on the meter, with the peaks at about 10 kc. The true deviations are actually higher than these indications, but the meter does not follow the instantaneous modulation of the voice signal.

Deviation may also be measured by means of a 1000-cps audio oscillator, an AC voltmeter and the monitor. With an audio input of at least 1 volt to the transmitter, the monitor should read 13 kc. This reading is lower than the true deviation of 15 kc, due to the variance of the average-peak relationship of the modulating waveform when the audio circuits of the transmitter are in full clip.

Another, and very reliable, means of determining the deviation requires the use of a scope, which must first be calibrated so that the amount of vertical deflection in relation to the deviation is known. For this purpose, the scope is connected to the output of the discriminator in the monitor, and a 1000-cps audio sinewave signal is applied to the transmitter input. This signal must be kept below the clip level during the calibration procedure. The audio is adjusted for a 10-kc reading on the monitor meter and the scope vertical gain is adjusted for a convenient deflection such as 10 full squares on the screen. Each square now represents 1 kc of deviation and we have a very sensitive indicator. Any means may now be used to modulate the transmitter and the scope will show the true deviation.

The above discussion is based on a system deviation of 15 kc. Where the deviation is limited to 5 kc, we use this as the maximum value, with 3.5 kc now corresponding to the 13 kc mentioned above. For 5-kc deviation systems, the scope again is an accurate and convenient means of measuring deviation.

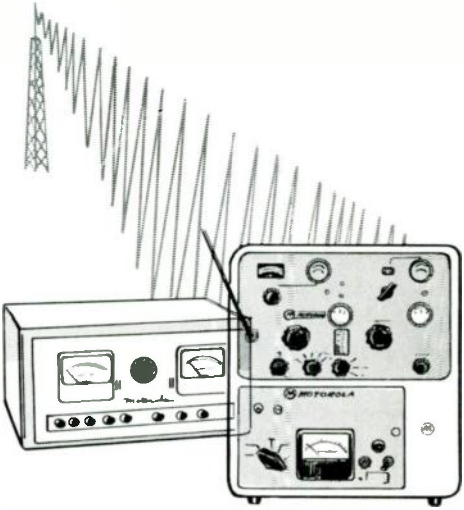

The Motorola Monitor and Frequency Meter will Also Measure the Deviations of an FM Transmission.

Heterodyne Frequency Meters

There are several types of frequency measuring meters, most of which make use of a highly stable and carefully calibrated oscillator. This oscillator is heterodyned or beat with the carrier to be measured. When a zero beat occurs, the calibrated oscillator is at the same frequency as the unknown carrier; the frequency may then be either read directly on the dials of the calibrated oscillator or determined from previously prepared charts. The basic system is shown in the block diagram of figure 3A.

The carrier which is to be measured is applied to a mixer along with the output of the calibrated oscillator, and the oscillator is adjusted to the approximate frequency of the carrier. As the frequency of the oscillator swings through the frequency of the carrier, their difference frequency will be heard in the headphones; the operator will first hear a high-frequency sound which gradually decreases in frequency until the zero beat is detected. As the oscillator frequency is further varied we again hear a difference frequency in the phones, only this time it starts at a very low frequency and the frequency increases until it is beyond the range of the equipment or the hearing range of the operator.

At zero beat, the oscillator frequency is the same as that of the carrier, so the carrier frequency is established by determining the frequency of the oscillator. On some instruments the frequency is read directly from the instrument dials; on others, it is necessary to determine the frequency from charts supplied with the instrument.

Without some means of calibrating the variable oscillator of the heterodyne type of frequency measuring instrument, the guaranteed accuracy would be poor and the instrument would not be acceptable for measuring the frequency of two-way communications transmitters. (The FCC requires that the accuracy of the instrument be twice as good as the required stability of the transmitter.)

In order to provide this higher degree of accuracy, a calibrating, crystal-controlled oscillator is included in the equipment of figure 3A. The frequency of the variable oscillator may now be calibrated against the crystal oscillator at the fundamental crystal frequency, at any harmonic of the crystal frequency, or at any combination of harmonics of the oscillators where their frequencies coincide. For example, let us assume that the crystal is 5 mc. The variable

In Addition to Monitoring a Desired Channel, the Motorola Monitor Measures Transmitter Frequency and Deviation.

oscillator has a check point at each megacycle. At 1 mc its fifth harmonic is 5 mc and a zero beat is detected when the oscillator is adjusted to exactly 1 mc. At 2 mc the oscillators have a common harmonic frequency at 10 mc to provide the zero beat. At 3 mc the common harmonic is 15 mc, and so on. Harmonic beats are thus heard throughout the range of the variable oscillator.

Now let us suppose that we require a frequency check of a transmitter operating at a frequency of 39.97 mc. The variable oscillator is first calibrated against the crystal oscillator at 40 mc, the closest check point. The two internal oscillators are applied to the mixer, with the variable oscillator dial set at exactly 40 mc. A small calibrating control is now adjusted for zero beat. The oscillator is now at 40 mc and, because 39.97 mc is very close to this check point, the measurement at 39.97 mc will be very accurate. (The further the frequency being measured is removed from a check point, the greater will be the chance for error.)

Where the frequency range of the instrument is lower than the frequency of the carrier being measured, the harmonics of the variable oscillator will provide the necessary beat signal.

In figure 3B, a variation of the basic system of figure 3A, two separate oscillators (one crystal controlled and one variable) are combined to produce the heterodyning signal. By using harmonics of the crystal controlled oscillator, and combining the output of both oscillators, the instrument supplies an accurate signal at the desired frequency.

Besides Measuring Transmitter Frequency and Deviation, the Motorola Frequency Meter may be used as a Generator for "Netting" Receivers.

One of the inherent advantages of this instrument is the frequency stability of the crystal oscillator, which determines to a considerable degree the stability of the output. The harmonic amplifier provides signals at 1-mc intervals throughout the operating range of the instrument. The low-frequency oscillator is variable from 1 mc to 2 mc. By combining these two signals, then, we have an output which is continuously variable. (This variable oscillator is readily calibrated at 1 and 2 mc by beating it with the crystal oscillator.)

The harmonic amplifier is tuned so that the output at the desired harmonic is maximum. In addition, the dial (used for tuning for this maximum output) is calibrated according to the frequency generated in the mixer, thus providing an indication of the "megacycle" portion of the signal. The "kilocycle" portion of the output is determined from the calibrated dial of the variable oscillator, also calibrated according to the frequency produced at the mixer.

The heterodyne type of frequency measuring instrument (figures 3A and 3B) may also be used as a signal generator. The desired frequency is selected on the instrument and the output is taken from the "input" terminals.[2]

Deviation Meters

Deviation meters are basically highly calibrated FM receivers; the output from the detector must be a function of the amount of deviation and this output must be indicated on a meter. If the meter reading should change with variations of input signal strength, or with the gain of the receiver, the indicated deviation will not be accurate.

The method used for converting the carrier frequency to the operating frequency of the discriminator is unimportant when measuring deviation, as the amount of deviation is not altered by frequency conversion. If we are to establish an accurate indication of the deviation, however, two things are essential.

First, the output of the discriminator must be a function of the amount of deviation but not of the strength of the signal. If the output of the discriminator should change with signal strength, we do not have a reliable indication. By providing full limiting in the receiver for all incoming signals, the discriminator will respond only to frequency changes.

Second, the gain of the amplifier stages between the discriminator output and the indicator must remain constant. Usually one or two stages of amplification are required, and if the gain of these stages changes, the meter reading is not reliable.

The metering circuit for indicating the amount of deviation may respond to the peak deviation or it may respond to the average deviation. It is important for the serviceman to know the characteristics of his instrument if he is to use it intelligently.

Interpolating Vernier Dials

Many heterodyne type frequency meters are equipped with vernier dials, which provide accurate readings to five figures. A typical arrangement is shown in figure 3C.

The system is as follows. The first two digits (hundreds) are found on the hundreds dial. Here

---

[2] See Test Methods, section 2, pages 36-38 and section 3, pages 11-14.

The Motorola Transistorized AC Voltmeter Will Measure Small AC Voltages Accurately and is Very Useful in Trouble Shooting Low Level Audio Circuits.

the reading is 3900, because the reference line is between 39 and 40.

The next two digits (units) are found on the inside circular dial. The marker for this dial is the zero reference line on the outer scale, which is between 27 and 28, so the next two digits are 27. The first four digits are 3927, and it remains only to read one more digit (tenths).

This final digit is read on the tenths vernier (the outer circular scale marked from 1 to 10). Whichever line of the vernier that coincides with (or is closest to) a line on the inner dial becomes the fifth digit. In figure 3C, the 33 on the inner scale is next to 7 on the vernier scale, so the final number is 7, and the complete number is 3927.7.

The ultimate accuracy of a vernier reading is always subject to a certain amount of "backlash." No matter how well the mechanism is constructed, there is always some backlash present and the readings can be expected to vary, according to whether the dial was rotated from a higher setting or from a lower setting. While the instruction book for any instrument should be followed in detail, it is customary to approach a setting from the low-frequency side and for the dial to have at least one full turn.

Once the dial reading has been determined, it must be converted to the corresponding frequency. A conversion chart is furnished with the instrument, but it is often arranged in 1-kc steps and does not include the in-between frequencies. It thus becomes necessary to interpolate the readings in order to obtain the exact frequency.

Suppose, for example, that the conversion chart indicates a frequency of 2420 kc for a dial reading of 3934.9, and 2419 kc for a dial reading of 3926.8. The dial reading of 3927.7 in figure 3 thus represents a frequency somewhere between 2419 and 2420 kc. The difference between the two dial readings shown on the chart (3934.9 and 3926.8) is 8.1. The actual dial reading (on the meter) is 3927.7, or 0.9 higher than the chart reading, which represents 2419 kc. The value 0.9 is only 1/9 the total difference (8.1); hence, the frequency difference is 1/9 of 1 kc, or 111 cycles. Adding this to 2419 kc, the frequency is found to be 2419.111 kc.

Some dials may differ slightly from the one shown in figure 3C, but the system of interpolating the reading remains the same.

AC Voltmeters

The AC VTVM is another important instrument in the servicing of two-way equipment. The ordinary VTVM is usually not satisfactory because its range is not low enough to provide accurate readings for small AC voltages. Besides having a high impedance, the AC meter must be capable of indicating small voltages in order to be useful to servicemen.

Microphone and other audio devices often have outputs of less than one volt, and it is essential to have an accurate means of measuring such voltages.[3]

We see from the above that the low scale of the meter should require no more than 1 volt for full-scale deflection. The manual for a particular 450-mc base station, for example, may state that the input level is 0.10 volt. Unless the scale used is at least as low as 1 volt, the meter deflection will not be sufficient to measure this value accurately. (The newer Motorola test set, Model TU546, provides for low-level AC voltage measurement facilities.)

A sensitive oscilloscope can be used instead of the AC voltmeter, and the scope can be accurately calibrated. Its limited portability is generally objectionable, however. While not essential, it is always convenient for the AC voltmeter to be portable, as the serviceman must often use this instrument where no AC power is available.

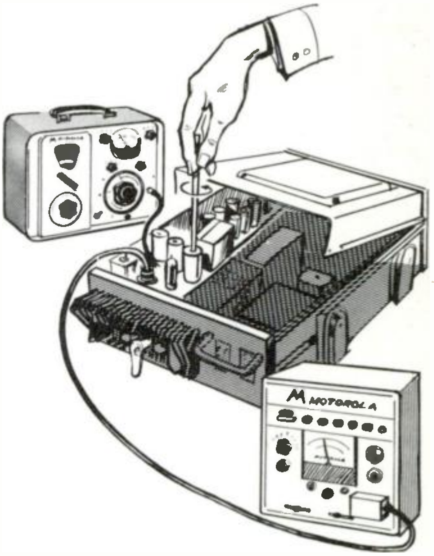

A Signal Generator and the Test Set are Recommended for Aligning Motorola Receivers.

Wattmeters

One of the most practical instruments for the service and maintenance of two-way equipment is the wattmeter. This instrument is valuable not only for aligning and trouble shooting the transmitter; it can be used also for trouble shooting the antenna system.

Wattmeters are of two general types. One type is terminated in a specific load which matches the impedance of the antenna system, the meter being used to measure the amount of power delivered to

---

[3] See Test Methods, section 2, pages 11-18.

that load. The other type uses the antenna system as the load and merely measures the power being transferred from the transmitter to the antenna. This type of wattmeter can be used to measure both forward and backward power. That is, the meter will indicate the amount of power returning from the antenna to the transmitter as well as the power being delivered from the transmitter to the antenna.

Wattmeters indicate the power directly when they terminate in a dummy load. It is important, however, (1) that the terminal impedance be matched to that of the antenna system--namely 50 ohms, (2) that the range of the meter include the transmitter frequency, and (3) that the power rating of the meter be adequate for the equipment being measured.

The Motorola test set may be used in conjunction with the Motorola dummy antenna in order to measure RF power. The dummy antenna includes a rectifier and meter calibrating resistor, which are used for measuring the current. Conversion tables are then consulted to determine the corresponding RF power.

By knowing the amount of power being delivered to the load, it is possible to adjust the transmitter for maximum output. Since the antenna has the same impedance as the dummy load, the tuning procedure does not change and the final settings will be the same when the antenna is substituted for the wattmeter and load. If the antenna is not perfectly matched to the transmitter, however, the settings may have to be changed when the antenna is substituted for the dummy load.

The wattmeter, when placed directly in line with the antenna, depends upon the antenna itself for the load, and it often proves to be a valuable instrument not only for checking the efficiency of the antenna system, but for measuring the RF power output of the transmitter as well.

This type of wattmeter is capable of measuring the amount of RF power reflected from the antenna to the transmitter as well as the amount of power delivered from the transmitter to the antenna. The difference between forward and backward power furnishes an indication as to whether the power reaching the antenna is actually being radiated into space as a radio wave, or returned from the antenna to the transmitter. This illustrates the importance of maintaining correct impedances. Unless the proper impedances are maintained, the power cannot be radiated by the antenna and must return to the source. If the impedance mismatch is as much as 2 to 1, the power loss is 11 per cent.

When measuring antenna power, the possibility of transmission line losses must also be taken into consideration. Suppose, for example, that the meter is placed between the transmitter and the transmission line. Any forward power indicated on the meter will represent the actual power being transferred to the antenna. The reflected power reading, however, may not show the true picture, for the reflected power reading is affected by the power loss in the transmission line, both going to the antenna and returning in the line to the transmitter.

This New Motorola Signal Generator Covers All the Frequency Bands Used for Two-Way Communications.

Let us further suppose that the transmission line in the above example offers a total loss of 6 db at the operating frequency and that the power available at the transmitter is 100 watts. With a 6-db loss in power (a power ratio of 4 to 1), the power reaching the antenna will be only 25 watts. Now let us suppose that the antenna is not properly matched and that only half of the power reaching the antenna (12.5 watts) is radiated, the other half (12.5 watts) returning from the antenna to the transmitter. This means that the reflected power at the antenna is 12.5 watts. but only one-fourth of this power reaches the transmitter, for again there is a 6-db loss and the reflected power at the meter is more than 3 watts. The meter at the transmitter thus indicates that the forward power is 100 watts and that the reflected power is 3 watts. Disregarding any loss in the transmission line, it would seem that the antenna system was satisfactory. On the contrary, however, the true story can be found only at the antenna end of the transmission line. A wattmeter at this position will show that the forward power is only 25 watts and that the reflected power is actually 12.5 watts--a very undesirable condition.

The cause of the above condition is twofold. For one thing, the antenna is not proper, as indicated by the high percentage of reflected power. For another thing, the 6-db loss of power in the transmission line indicates that the line is at least improper--if not actually defective--and that a different type of line, one that does not have so much loss, should be used.

Signal Generators

The RF signal generator which has an accurately calibrated output can be one of the most practical among the various measuring and trouble-shooting instruments used by the serviceman working on two-way equipment. This instrument is not essential as far as FCC requirements are concerned, but it is very convenient for checking the operation of a receiver.

The Motorola test set is accurately calibrated for IF alignment when a 455-kc crystal is used. Hence, the frequency calibration of the RF signal generator is not as important as its indication of the output signal level. Sensitivity is one of the primary considerations of the communications receiver; without a signal generator to determine the 20-db quieting level, it is hard to tell when the receiver is working at its full rating.

By using a generator (such as the Motorola TU576, or equivalent) together with an output indicator for the receiver (the Motorola test set provides this function), the sensitivity of the receiver can be measured in a very short time. This arrangement is very helpful both in alignment and in trouble shooting.

When aligning the receiver, the generator conveniently provides an RF signal having a predetermined level. The Motorola test set then indicates the output for the various circuits and the latter are adjusted to any level required. After all circuits have been adjusted, the RF level of the generator will indicate the exact sensitivity of the receiver.

When trouble shooting the receiver, the generator provides a substitute signal, and the frequency and level of this signal may be varied as required. Stage gain measurements can thus be made by the serviceman in order to determine the operation of each section of the receiver. (If the serviceman knows the amount of input voltage which is required in order to produce a specified output voltage for a particular stage, the exact location of a defective section can be easily determined.)

When using the signal generator with a receiver, it is important to provide the proper impedance match. Otherwise, the voltage indicated by the generator will not be accurate; measurements will be meaningless. This readily accounts for differences in readings when several generators are used. Unless the generator is properly terminated and unless the correct cabling and termination is provided, valid measurements cannot be obtained.

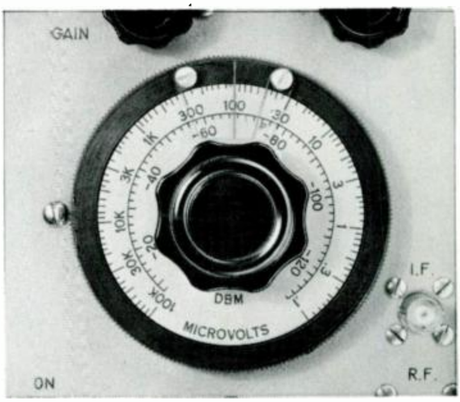

Here We See the Level Adjusting Dial of the Signal Generator. The Setting Accurately Indicates the Generator Output Voltage.

The accuracy of the output voltage furnished by the signal generator can be completely nullified if there is an appreciable amount of leakage RF. It will be obvious that a generator which radiates more signal into the receiver than that provided at its output terminals would be nearly useless at low signal levels.

The range of the instrument should include all frequency bands for the equipment being serviced --ideally from 5 mc to 1000 mc for equipment used in two-way communications. While few present-day receivers operate in the 900 mc band, it is probable that more receivers will use these high-frequency channels in the future. This frequency setting need not have a high degree of accuracy, it is true, but it is essential for the generator to have good frequency stability. The low-frequency range also finds no direct use as a channel frequency, but the 5-1000 mc generator provides the necessary output often required when aligning the high-frequency IF sections of receivers.[4]

Oscilloscopes

While the "scope" cannot be regarded as an essential piece of test equipment (since service work can be performed without one), its versatility makes it an invaluable instrument in all kinds of service work.

The scope is capable of indicating and measuring almost any electronic factor that is usually measured by a meter (frequency, waveform, phase, amplitude, etc.). It is particularly convenient when used in conjunction with a deviation meter. While any of the deviation meters discussed in this lesson can be used to indicate average or maximum deviation, it is not possible to record both values on the same instrument, nor is it possible to determine the exact modulation pattern being measured. The scope, however, indicates the actual waveform of the signal, and when it is calibrated according to its vertical deflection, the exact peak deviation is indicated. Furthermore, oscilloscope patterns for the voice range are entirely independent of frequency. When used in connection with the operation of the transmitter IDC circuit, the scope will indicate the exact point of clipping and the operating waveforms.

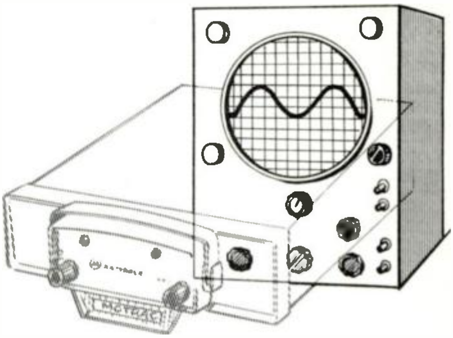

A Scope is Very Useful in Adjusting the IDC Circuit and Trouble Shooting the Audio Section of the Transmitter.

While the average serviceman is acquainted with the general op-

---

[4] See Test Methods, section 2, pages 61-68.

eration of this instrument, it may be well to review the basic circuit. Figure 4 shows the functions of the various sections of a typical model.

The scope is designed about the cathode ray tube (CRT). Deflection plates in the CRT allow the electron beam to be bent vertically and horizontally, and a waveform is thus produced according to the nature of the deflecting voltages applied to these plates.

The horizontal deflection is normally a sawtooth wave wherein the beam is gradually pulled from the left-hand side of the tube to the right. When the beam reaches its extreme right excursion the waveform changes, returning it very quickly to the left-hand side. The cycle is then repeated continuously. The horizontal deflection plates in figure 4 are connected to the output of the horizontal deflection amplifier. The amplifier input comes from the sweep (sawtooth) generator and its frequency is variable. This sweep waveform is triggered by the vertical section when the sync selector switch is at INT. A small portion of the vertical deflection voltage is then applied to the horizontal generator in order to synchronize the horizontal sweep frequency with the frequency of the vertical voltage.

The desired waveform is applied to the vertical amplifier and the output impressed upon the vertical deflection plates. Gain controls are provided for both vertical and horizontal deflection voltages, and the pattern may be shifted either to the right and left or up and down, by the two positioning controls, R3 and R4.

The exact manner in which the waveform is produced on the CRT screen is thoroughly explained in other publications and need not be repeated here. We are interested, rather, in the practical use which can be made of the waveform thus produced.

By knowing the nature of the waveform applied to a circuit, and then comparing it with its successive representations as it passes through the various stages, the operation of these stages can be evaluated, particularly with respect to gain and distortion.

In the audio section of the transmitter, the waveform of the audio modulating voltage is of particular interest, for the entire purpose of this section is to control the amplitude and waveform of the voltage applied to the modulator. By observing the waveform at successive stages within this section, operation of each portion of the circuit can be evaluated and any inoperation or malfunction immediately pinpointed. Moreover, the vertical deflection can be plotted against vertical input voltage, which enables the serviceman to ascertain the various levels of audio voltage from point to point within the circuit.

Typical audio waveforms within the transmitter are shown in figure 5. The left-hand column shows waves produced as a result of clipping, at various voltage levels. The right-hand column shows the resulting waveforms, respectively, at the output of the integrator. The upper waveforms show no change from the original sinewave, which means that the amplitude is not sufficient to cause clipping, and the sinewave is not altered by the integrator. The lower waveforms show what happens when the input voltage is very high. The severe clipping of the wave produces a square wave output and the integrator changes the square wave into a triangular wave. The waveforms in between these two extremes represent various degrees of clipping.

Distortions within the audio section of the receiver are readily located by means of the scope, and they can be quickly pinpointed with this instrument to a definite section. This is done by putting the input audio signal on the scope and then following it through the circuit. Any deviation in the original waveform indicates some kind of distortion.

Since the exact signal level can be determined by means of the scope calibration, the instrument thus becomes a sensitive AC voltmeter. By comparing the input amplitude of a stage with the output, the stage gain can be determined. Coupling circuits may show a high degree of attenuation from the plate of one stage to the grid of the next stage, automatically indicating a defective circuit. Open coupling capacitors are readily located by this method although they cannot be discovered by means of voltage or resistance tests. When checking coupling circuits, the serviceman must remember that some attenuation will always be encountered, and that it will be greater at the lower frequencies than at the higher frequencies, resulting in a proportionally greater loss. This is particularly true where the coupling capacitance is relatively small.

The scope finds good use in connection with the Motorola Monitor in measuring deviation. Test calibration circuits in the instrument allow a quick calibration of the vertical deflection at 15 kc, and the gain of the scope can be adjusted for a convenient deflection at 15 kc. The gain of the scope can then be adjusted for a convenient deflection with this known voltage applied. Then, when a signal is applied to the instrument, the amount of deviation can be immediately determined by means of the deflection produced. Observation of the waveform shows both peak and average deviation.[5]

The Test Bench

Figure 6 shows a practical test bench which includes the test equipment necessary for properly servicing two-way radios. On the

---

[5] See Test Methods, section 2, pages 40-53.

upper shelf from left to right we have the Motorola frequency and deviation meter, the Motorola transistorized AC voltmeter, the Motorola test set, a dummy antenna, an RF wattmeter, and the Motorola Signal Generator.

Other test equipment includes a power supply for bench operation of mobile radios, a filter for operating transistorized receivers, a meter panel which allows for simultaneous monitoring of the various receiver circuits, and battery testers.

On the work shelf we see a typical two-way radio, this particular model being a "Motrac" unit, which includes a completely transistorized receiver and power supply. Additional tools, cables, service manual, etc., may be kept in the storage areas below.

STUDENT NOTES

STEP 1

ADJUST AUDIO OUTPUT
TO SPECIFIED READING
ON DEVIATION METER

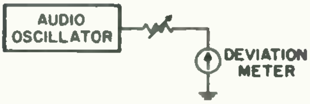

FIGURE 2A

STEP 2

ADJUST AUDIO GAIN
FOR ±5KC DEVIATION

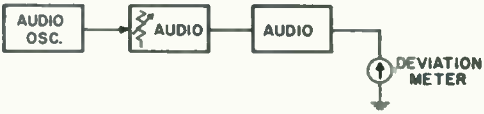

FIGURE 2B

STEP 3

READ DEVIATION
ON METER

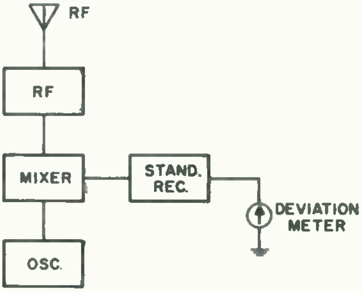

FIGURE 2C

USING THE MOTOROLA MONITOR
TO MEASURE DEVIATION
FIGURE 2

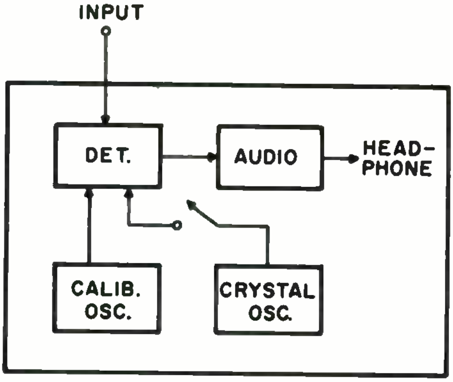

FIGURE 3A

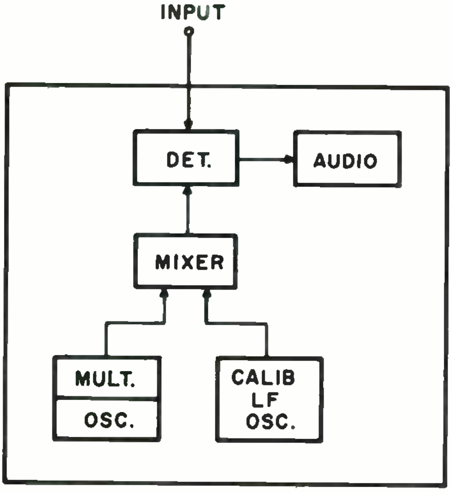

FIGURE 3B

HETRODYNE METERS

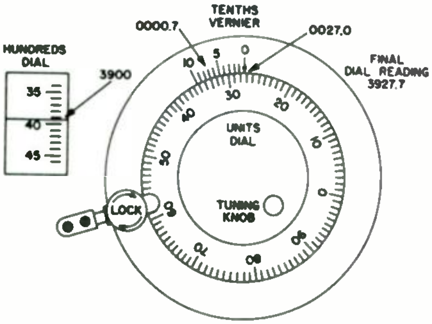

DIAL OF A TYPICAL HETERODYNE FREQUENCY METER

FIGURE 3C

STUDENT NOTES

STEP 1
CALIBRATE 5MC CRYSTAL OSCILLATOR WITH WWV

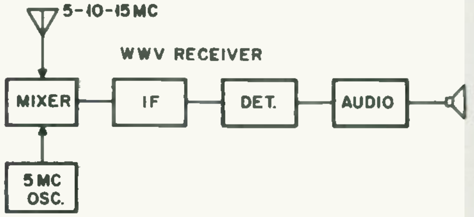

FIGURE 1A

STEP 2
USE 5MC OSCILLATOR TO CALIBRATE THE CONTROL RECEIVER TO 150MC

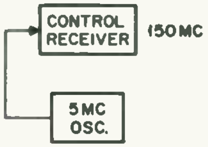

FIGURE 1B

STEP 3
DETERMINE THE CORRECT CRYSTAL FREQUENCY

FIGURE 1C

152.5 (CHANNEL FREQ.)
-150. CONTROL RECEIVER
2.5 MC

STEP 4
WITH CORRECT CRYSTAL IN OSCILLATOR, APPLY OSC. AND RF SIGNAL BEING MEASURED TO MIXER. MIXER OUTPUT IS APPLIED TO CONTROL RECEIVER AND DISCRIMINATOR OUTPUT INDICATES FREQUENCY OF RF SIGNAL

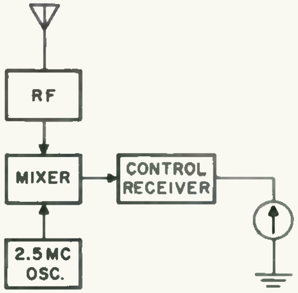

FIGURE 1D

(CRYSTAL CONTROLLED)

FREQUENCY MEASUREMENTS USING THE MOTOROLA MONITOR
FIGURE 1

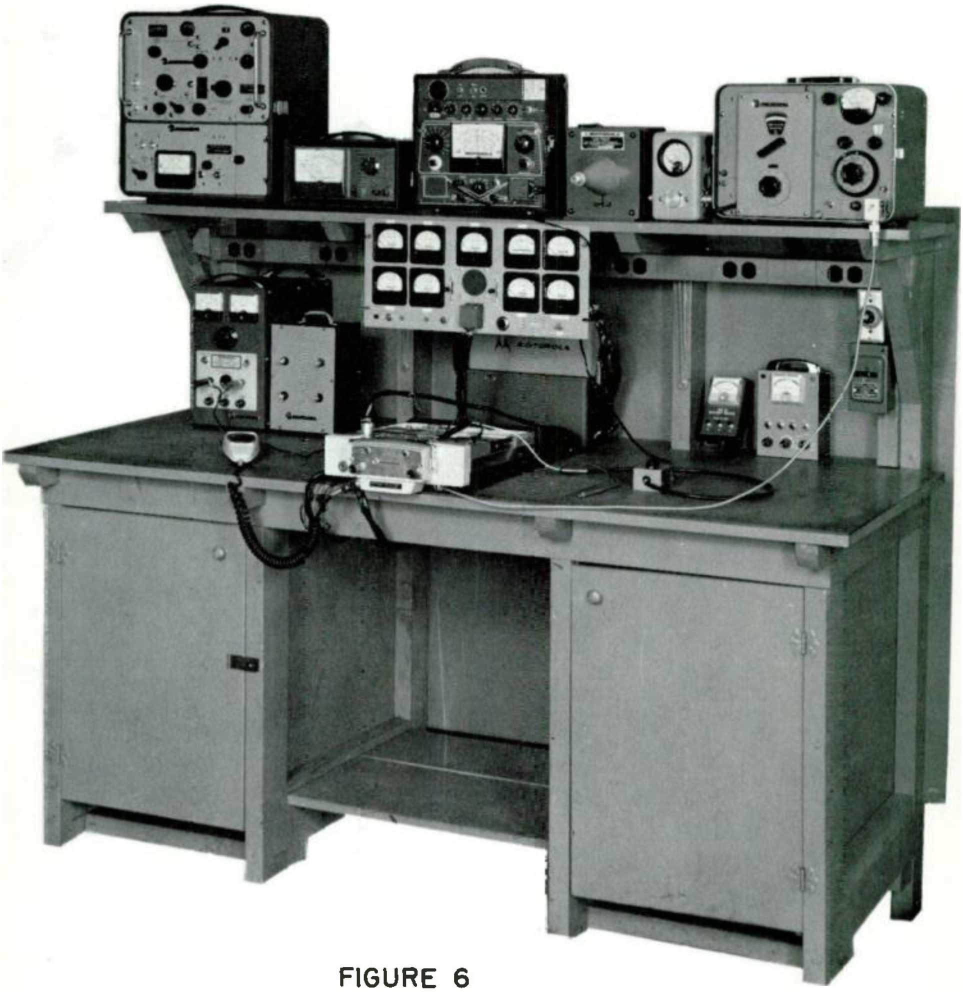

FIGURE 6

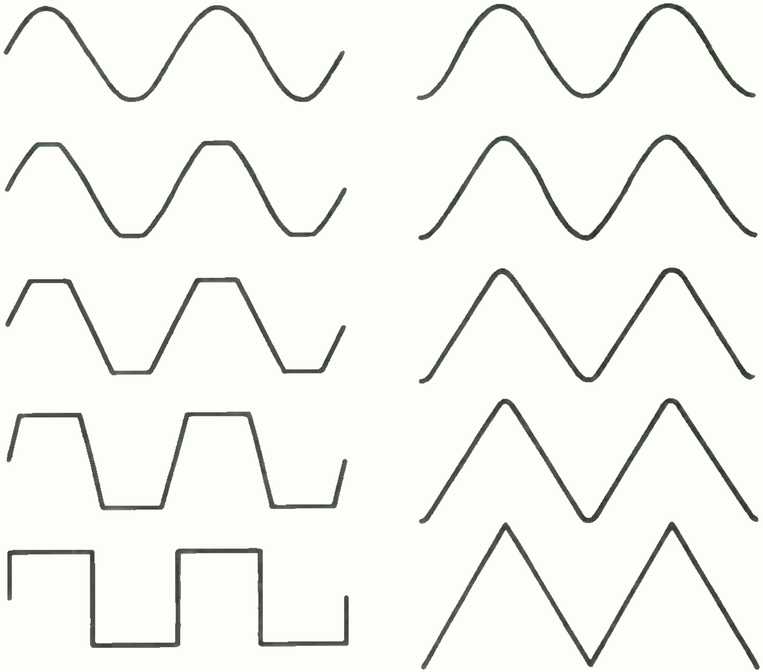

SINE WAVES WITH VARIOUS DEGREES OF CLIPPING, BEFORE AND AFTER INTEGRATING

FIGURE 5

STUDENT NOTES

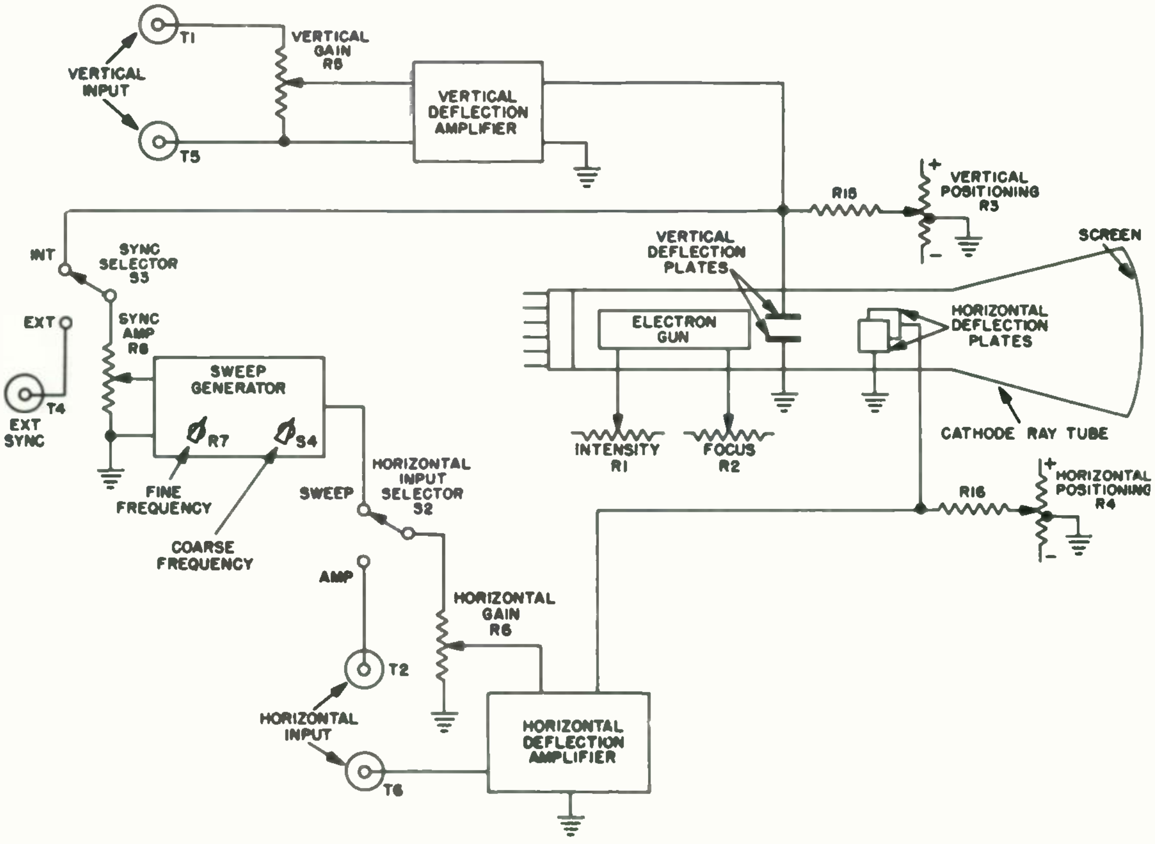

FIGURE 4

Motorola Training Institute

4501 West Augusta Blvd., Chicago 51, Ill.

Please PRINT or use STAMP

Name ______________________ **Student No.** ______

Street ______________ **Zone** ____ **Date** ______

City ______________ **State** ________ **Grade** ______

EXAMINATION LESSON MA-7

1. The Motorola monitor may be used to measure both frequency and deviation of an FM transmitter.
TRUE ________ FALSE ________

2. An internal crystal-controlled 5-mc oscillator provides a high degree of accuracy to the Motorola monitor when used for measuring frequency. The accuracy of this oscillator is obtained by means of

A. a temperature controlled oven ________
B. a highly stable crystal and circuit ________
C. frequency checks with station WWV ________

3. The accuracy of the control receiver in the Motorola monitor is obtained by

A. using a multiple of the 5-mc oscillator to place it on exact frequency ________
B. beating it against station WWV ________
C. using a stable oscillator and a voltage regulated power supply ________

4. The control receiver in a Motorola monitor is tuned to 160 mc and the channel to be measured is 158. 510 mc. The correct crystal frequency to use in the monitor is

(A) 158. 510 mc ________ (B) 1. 490 mc ________ (C) 8. 510 mc ________ (D) None of these, use ________

5. If the gain of the audio section of the Motorola monitor changes during a deviation measurement, the reading (will) (will not) be affected.

6. The gain of the control receiver in the Motorola monitor changes so that the limiters are not limiting and the discriminator output changes with the strength of the incoming signal. This has no effect upon the accuracy of the indicated deviation.
TRUE ________ FALSE ________

7. In making deviation checks with the Motorola monitor, the audio section is calibrated by inserting a known amount of voltage into the audio input and adjusting the audio control for 15 kc deviation.
TRUE ________ FALSE ________

8. In using a heterodyne type of frequency meter having a dial like that of figure 3, we have a reading of 2245. 9. Between what two numbers is the "hundreds" dial? ________ Between what two numbers is the "units" dial? ________ How do we determine the ". 9" portion of the reading? ________

____

____

9. In using a wattmeter which measures both the forward and the reverse power in the antenna, it is essential that the meter be connected at the antenna if accurate indications of the antenna match are to be had.
TRUE ________ FALSE ________

10. In using the Motorola monitor for measuring and adjusting the deviation of a transmitter, the fact that the monitor meter is responding to the average deviation must be considered. If the modulating signal to the modulator is a sinewave, the meter reading will be correct; with other modulating waveforms, the true peak deviation may vary from that shown.
TRUE ________ FALSE ________

national
MOTOROLA
RADIO COMMUNICATIONS
service

A TWO-WAY RADIO COMMUNICATIONS TRAINING PROGRAM

LESSON MA-8
MAINTENANCE

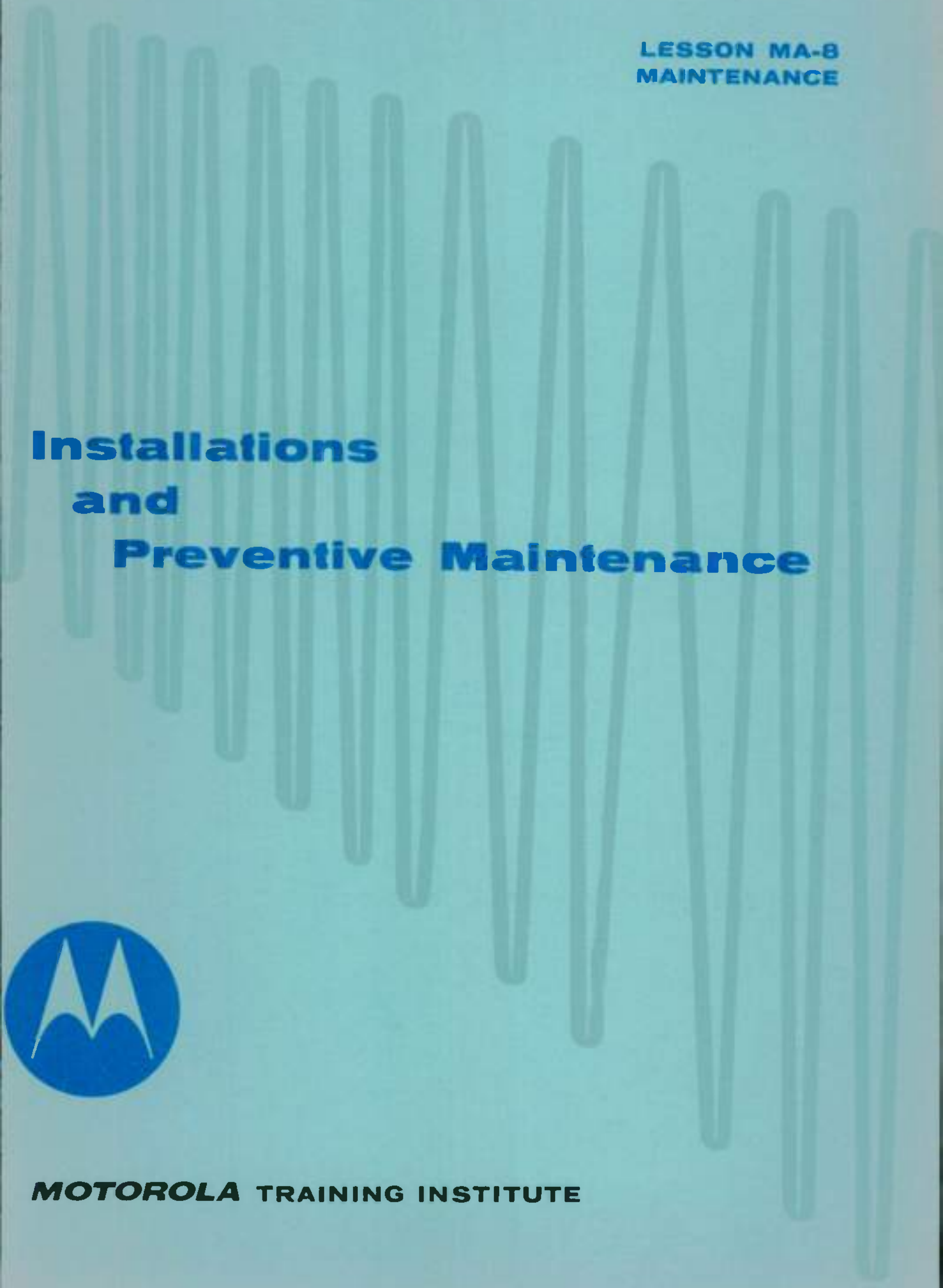

Installations
and
Preventive Maintenance

MOTOROLA TRAINING INSTITUTE

A TWO-WAY RADIO COMMUNICATIONS TRAINING PROGRAM

LESSON MA-8
MAINTENANCE

Installations and Preventive Maintenance

—one of a series of lessons on two-way FM communications—

MOTOROLA TRAINING INSTITUTE
4501 W. AUGUSTA BLVD., CHICAGO 51, ILLINOIS
APPROVED BY THE STATE OF ILLINOIS
DEPT. OF REGISTRATION AND EDUCATION

PREFACE

This is one lesson of a complete Motorola Home-Study Course which presents to the Service Technician both the principles of operation and the maintenance of two-way FM radio systems. The program covers mobile, portable and base station equipment, including the latest transistorized units.

TWO WAY INSTALLATIONS AND PREVENTIVE MAINTENANCE

LESSON MA-8

TABLE OF CONTENTS

NOTICE

Diagrams and figures referenced in text are "fold-outs" in back of each lesson, for use while studying. The Examinations are also there.

You'll find two-way mobile radios installed in all types of vehicles--from the smallest foreign car to the largest earth-moving or machinery handling type of equipment.

TWO-WAY INSTALLATIONS AND PREVENTIVE MAINTENANCE

Lesson MA-8

Introduction

In this lesson we shall discuss the installation of two-way communications equipment. If the equipment is to continue to perform with maximum efficiency and reliability, it is essential for it to be properly installed and procedures must be followed to insure satisfactory operation of the equipment. A good installation also reduces the amount of future maintenance required on the system. In addition to installation techniques, we shall talk about the routine maintenance which must be practiced in order to assure continued good performance. Let us start our lesson by discussing the installation of a mobile two-way station.

Mobile Installations

After the equipment has been unpacked, inventoried, and inspected for possible damage, the complete installation must be planned. This will be governed by the car or vehicle in which it is to be installed. For our example we shall assume that a rear mount installation is to be made in a commercial car or cab. (It will have been previously determined whether the installation is to be a front mount or a rear mount.) The instruction manual must be studied carefully. Diagrams such as figure 1 and 2 are supplied to show the recommended location of the various units and their proper interconnections.

After the installation has been planned, the serviceman should proceed according to the suggestions in the manual. The housing for the receiver, transmitter and power supply is first installed. The drawer unit is removed and the housing located so that the drawer unit is accessible and can be readily removed for service. A minimum of 3 or 4 inches is required in front of the split-type housing--see figure 1. The housing must be well grounded to the car frame.

All paint and dirt must be scraped off and the surfaces burnished (with steel wool) to insure good contact. When mounting holes are being drilled, care must be taken to prevent the drill or mounting screws from coming too close to the gas tank or gas line.

The components inside the car may be mounted next. These include the control head, the microphone and its hang-up bracket, and the speaker. The control head along with the bracket for the microphone are mounted on the dash, so that it is conveniently accessible to the operator. The microphone may require connections within the control head or a plug connector may be provided, depending upon the equipment. Details are incorporated in the manual. The speaker is mounted in the most convenient place which will provide maximum audibility to the operator, and interconnections are made between the speaker and control head.

The fuse block and A power relay are next mounted, either on the engine side of the firewall or on the fender panel. The fuse block is located close to the battery, and the relay should be near the fuse block. The relay should be mounted with its contacts pointing down to avoid moisture accumulation inside the relay can. The cabling may now be installed.

Figure 1 shows the approximate path of the cables between the front units and the housing. The exact routing will depend upon the type of vehicle. (In some of the new cars, certain cable routings could conceivably require a longer cable than that supplied. For this reason, it is well to consider the cabling before mounting the individual parts--it may be necessary to relocate a few of the units. In most installations the cable is longer than necessary and the "extra" is coiled up, taped, and positioned out of the way.)

Always "Take Inventory" and Plan Each Installation.

We shall consider the antenna installation next. It may be locate either in the center of the roof o on a fender. (See figure 1.) High band or 450-mc equipment require a roof mount for optimum operation. The length of a low-ban whip antenna often makes it impractical to mount it on the roo top; unless maximum sensitivit is required, it may be mounted o the fender.

Where some peculiarity of particular installation makes i impossible to follow the instructions in the manual, the solutio must be logical. It must not interfere with the operation of th unit. When mounting the variou units, all mounting screws mus be firmly tightened. The correc size holes are specified to insur a good contact. If the vehicle i to be subjected to excessive vibration, suitable mounting nuts, bolts and washers may be substituted for those recommended in the manual. There is more to the complete installation than the mere mounting and cabling of the equipment. In addition to the noise filtering which may be required, the frequency, deviation and power must be checked in order to insure satisfactory system operation. The receiver, too, should be checked for sensitivity, squelch operation, and noise balance. The list which appears later in this lesson will serve as a guide for checking out the entire equipment. All readings which are taken should be recorded and retained for future reference.

Base Station Installation

Installation problems with base stations are different from those encountered with mobiles. The primary power available at the site must have sufficient voltage regulation. If not, some means must be provided for controlling the voltage at the equipment. Where the base station is remotely controlled, moreover, the control line must have certain critical characteristics. DC is normally used for operating the relays which switch the equipment between standby and transmit. Besides providing a good DC path, the control line must also carry the modulation, so its frequency characteristics must be satisfactory for voice transmission. The db loss of long lines is thus an important consideration.[1]

The site chosen for the base station equipment should be easily accessible to the serviceman and it must meet all code requirements (fire department, building department, electrical department, etc.)

The antenna must be carefully located so as to avoid interfering with other services. It must not cause intermodulation and desensitization in other local receivers due to its proximity with other antennas. At the same time, the site must provide complete coverage of the service area. The base station antenna must be mounted so that it will withstand the elements, and proper lightning protection is a must. Where a directional antenna is used, it must be properly oriented. The transmission line must be properly installed and secured and, where air or gas lines are used, the proper pressure must be established.[2] The line must be well grounded where it enters the building, and a drip loop should be used. This prevents water from entering the building or equipment via the line. In some base station installations, cavities are included to prevent interference; these must be properly tuned. Tower lights must be capable of being turned off and on at the proper time, and this must be verified.

Proper clearance for the front and back doors must be provided when installing the cabinet. Upright type cabinets must be securely bolted down and grounded. Emergency power, if provided, should be checked to make sure that it operates properly.

---

1. See "Hum Reduction in Remote Control Lines," reference M-8A.
2. See reference T-12A.

The Microphone of the Mobile Two-Way Radio Must be Within Easy Reach of the Operator.

The base station must be checked and a log established, according to FCC regulations. A record should be kept of all readings such as power output, receiver sensitivity, etc.

Noise Suppression in Mobile Equipment

Noise encountered in the mobile two-way radio equipment may be caused by the ignition and electrical system of the vehicle in which the equipment is installed, or it may be reaching the receiver through the antenna system along with the desired signal. Very little can be done about this latter so-called "ambient" noise, so it imposes a limit on the effective sensitivity of the receiver. It is not likely, for example, that the receiver will reproduce a 1-uv signal very well when the incoming noise is itself 2 or 3 uv!

While noise which is caused by the car's electrical or ignition system also places a limit on the weakest signal that can be successfully reproduced, something can be done about it--it can be suppressed.

Noise suppression requirements and procedures vary considerably for different vehicles and with different types of installations, the location and use of the system often determining what degree of noise suppression is required. Where the system has a lot of reserve, so that the signal at each of the receivers is high, it may not be necessary to provide much suppression; the signal may be sufficiently strong to override the noise. Where the vehicle operates in low signal areas, however, it is necessary to limit the noise to a level lower than that of the signal, if contact is to be assured. One factor limiting the amount of noise suppression which should be realized for this condition is the ambient noise; it would be useless to reduce vehicle noise to a level far below that of the ambient noise, for the latter will always limit the reception.

The procedure for suppressing vehicle noise follows two phases. First, there is the general procedure which should be followed in almost all vehicle installations. Second, there are additional steps that must be taken when such routine procedure does not accomplish the desired suppression.

General Noise Suppression Procedure

If the vehicle is not already equipped with noise suppressors, the first thing to do is to install a suppressor in the center lead of the distributor cap and a capacitor at the armature lead of the generator. (Details for the installation of these units are given in the equipment instruction manual.) Most modern cars, have a by-pass capacitor at the generator, and the distributor suppressor alone remains to be installed. These units usually provide sufficient suppression of the ignition and generator noise without causing the radio to lose its ability to reproduce weak signals. Occasionally, the gauges produce some noise. This is suppressed by installing a capacitor at the gauge terminals, under the dash.

Receiver Noise Balance

Although the noise balance of a receiver is not a routine procedure in noise suppression, it is a regular part of the proper installation of the equipment. The noise balance of a receiver depends upon the last IF section being balanced with the response characteristic of the Permakay filter. Otherwise, the discriminator will fail to provide good noise idling and quieting. Before starting, we must assume that the receiver has been properly aligned; noise balancing should never be attempted without proper alignment.

For noise balance, with a signal applied from a signal generator and the motor running, so that noise is also present, the generator is adjusted to the center frequency and set at a level capable of producing about 20 db of quieting. The amount of noise is noted. The generator is then adjusted to either side of resonance and the amount of noise noted. If the zero discriminator output point coincides with the null point of the noise, the receiver is balanced. A perfect noise balance is not always realized, due to variations which may exist. Therefore, as long as the null is within 2 scale divisions of zero, the balance is satisfactory.

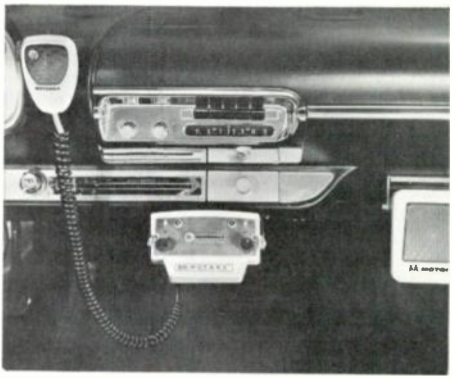

This Microphone is Within Easy Reach of the Driver.

With the generator once more at center frequency, the plate tank coil of the first 455-kc IF amplifier is adjusted slightly in either direction, the purpose being to decrease the noise at the speaker. In making this adjustment, it is important that the reading at metering position 2 does not decrease more than 0.5 microampere. If the reading is lower than this amount, the receiver sensitivity will suffer or, at least, the reserve gain will be sacrificed. In some receivers the plate tank of the IF stage will not show any appreciable change in noise balance, because of the loading resistors in the plate tank. With these receivers, it will be necessary to provide the noise balance by means of the tuned circuits in the first IF section.

Locating Noise Sources

After the general procedure for suppressing vehicular noise has been completed and the receiver adjusted for optimum noise balance, the noise input to the receiver may still be too high; further noise suppression may still be desirable. The first thing to do is to locate the source of the noise. Noise may be caused by the generator, the ignition system, the electrical gauges, or by static discharges.

The source of most noises can be determined from the sound heard in the speaker. Ignition noise is characterized by regular popping or snapping sounds, which follow changes in the speed of the engine. The ignition coil, distributor or spark plugs may be the actual source of ignition noise, the interference being radiated from the interconnecting wires.

A whining noise can usually be attributed to the car generator. This kind of noise should also follow changes in the speed of the motor.

Harsh, raspy noise, of a continuous character is usually caused by gauges: the most common offender is the pulsing type of temperature gauge. Popping noises, occurring only when the car is in motion, may be caused by static discharges from insulated parts of the vehicle. Erratic popping, which increases as lights and other electric accessories are turned on, are usually caused by miniature arcs resulting from the small voltages which exist between the vehicle body, frame and motor block.

Be Sure to Avoid the Gas Tank, Gas Line and Similar Parts of a Vehicle when Drilling Holes and Mounting Two-Way Radio Equipment.

Ignition Noise Suppression

The problem of suppressing ignition noise has been growing more acute with the widespread use of 12-volt electrical systems. This high-impulse type of noise is at once the most bothersome to radio reception and the most difficult to eliminate. Some of the more common causes of noise within the ignition system are: Distributor breaker points not operating properly, inefficient ignition condenser, corrosion and poor contacts within the system, and spark plugs improperly spaced or in poor condition.

Figure 3 shows several noise suppression arrangements which can be applied to the ignition system. Circuit element 1 represents a 0.1 mfd capacitor inserted across the primary lead of the ignition coil to ground. Either a capacitor such as that supplied with the equipment or a special coaxial type capacitor may be used. (Coaxial capacitors are more effective in reducing severe interference.) This capacitor should be located right at the coil, and the lead to the grounding point should be as short as possible.

Circuit element 2 represents the suppressor mentioned above, placed in the distributor cap lead. This should be located as close as practical to the distributor cap. Circuit elements 1 and 2 are often all that is needed to provide the necessary suppression.

Ignition noise may be further reduced by using circuit elements 3 and 4. In any case, these two components should be tried first, for they are usually the most effective in reducing the noise. When resistance ignition cable (3) is used for greater noise reduction, care must be taken not to introduce too much resistance, thereby sacrificing the performance of the engine. (It is possible to cause rough idling, particularly in cool weather, by using too much resistance.) The resistive type spark plug (4) is often included in the newer cars. The only precaution to be observed here is to make sure that replacement plugs, when used, are of the correct type for the operation of the car and that the "gap" is correct. Many of the new cars have a resistance wire type harness between the coil and the plugs as standard equipment. When this is the case, it may be neither necessary nor helpful to use resistance plugs. Resistance plugs and ignition wires may usually be installed without causing trouble, however, in cars which have the higher ignition voltage.

Spark Plug Leads

Where stubborn ignition problems are encountered and the preceding remedies fail to provide sufficient noise reduction, it would be well to use an ohmmeter to check the continuity of each of the spark plug leads. There must be a path for DC. Where there is no DC path, the end connectors may be checked. If continuity is established by "squeezing" the terminal, the lead itself is probably satisfactory. Where the continuity still is intermittent, it is best to install a replacement lead, checking the new one first for continuity.

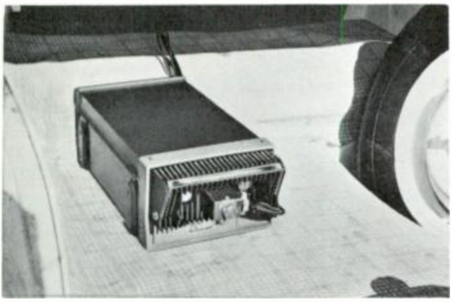

In Locating the Housing, Allow Plenty of Room for Servicing Trunk Mount Radios.

A minimum number of terminals should be used within the ignition system. Thus, it would be better to use a resistor-type spark plug or a resistance spark-plug wire than to use a regular spark plug or spark-plug wire and install separate series suppressors. If resistance wire is used, the amount of resistance added is established by the manufacturer of that particular car.

Ignition Noise

Ignition noise is coupled to the surrounding parts and reaches the two-way radio in several ways; one of the most common is direct radiation into the antenna. Resonant lengths of wire are common at high-band frequencies, and these act like a tuned antenna, radiating the available noise power quite efficiently. Ignition noise is also often coupled to low-voltage circuits. Spark plug leads should thus be separated from other wiring. The length of these wires should be changed in such instances. Shielded wire is another possible solution of difficult noise problems if the performance of the vehicle is not to be impaired.

Sometimes the distributor points undergo considerable arcing, and this causes interferences due to radiation from the associated primary wiring. Assuming that suppressors have been already installed in the primary lead and in the lead to the center connector, and that the leads to the spark plugs are all making good contact, the use of a coaxial type suppressor in the primary lead will prove the most effective. If the distributor itself is operating properly, the above steps should provide the necessary noise suppression.

Generator Noise Suppression

Generator noise is characterized by a high-pitched whine which varies with the speed of the generator. This makes its recognition a simple matter; if the noise changes with the speed of the generator, the generator is probably causing it, for there is nothing else in the car which produces this type of sound varying as it does with the motor speed.

Generator noise is usually the result of arcing between dirty or worn brushes and the commutator. In some cases, commutators may be cleaned with fine sandpaper but never with emery cloth. It is advisable to have this service performed by a competent specialist. Most of this noise can be held to a low level by keeping the generator in good operating condition.

Where generator filtering is required, a capacitor connected between the primary lead and a good ground makes an efficient suppressor. Coaxial capacitors are more efficient than ordinary capacitors over the entire noise range and they are universally preferred for maximum possible noise reduction.

Where the noise caused by the generator is unusually severe, a shielded wire, well-grounded at both ends, can be used between the generator and the voltage regulator. Heavy generator noise can also be suppressed by using an elaborate pi-type filter. These filters, which are connected directly at the generator, are usually available from the manufacturer.

Voltage Regulator Noise

Noise caused by the voltage regulator can usually be recognized by its raspy sound, the result of arcing at the regulator contacts. Where this noise is not excessive, filters may be added to the regulator. Otherwise, the best solution may be to install a new regulator! A coaxial capacitor will usually suffice at the lead to the generator, provided that the connection is close to the regulator and provided that the ground is good.

It is not permissible to connect such a capacitor at the generator field terminal of the regulator, for this will greatly reduce the useful life of the regulator. Instead, a small 1-watt resistor of about 3.3 ohms must be placed in series with the capacitor, as shown in figure 3. The capacitor will be considerably smaller than the others (usually about .002 mfd) and the resistor must be of the carbon type, not wirewound. It is usually unnecessary to use a capacitor at

Noise Produced by Ignition Systems Often Interferes with Mobile Two-Way Radio Communications.

the battery terminal of the regulator, although this may be advisable if it improves the noise level.

Gauge and Other Equipment Noise

Gauge noise is usually identified by a hissing or crackling sound in the speaker. In most instances the offending unit can be located by jarring the individual gauges while the ignition is on. Noisy gauges should be bypassed as near the noise source as possible, but it is also important to provide a good ground. Connecting wires which are close to the motor block provide a convenient ground point. The oil sender, with its low-pitched clicking sound, and the temperature gauge are among the commonest sources of gauge noise.

Noise is an inherent property of all moving parts which are ungrounded, or insulated from the rest of the vehicle. This includes the wheels, the front wheels in particular, for these are often insulated from the ground by wheel grease. The accumulated static charge produces arcs, which cause noise in the radio equipment. Standard ground brushes and springs will usually reduce the noise from this source.

While most parts of the vehicle are bonded in order to provide a good ground return, occasionally some part of the car body exhibits poor conductivity and becomes a source of noise radiation.

The muffler and tail pipe assembly, for example, is often insulated from the car frame and it may be necessary to ground the tail pipe at several points between the motor and the rear of the vehicle. The hood, too, is often insulated from the car frame, requiring bonding by heavy copper braid and contact wipers.

Although the motor is already grounded to the car frame, it sometime becomes necessary to provide additional ground straps at each corner of the motor. This is particularly true where the ignition noise is too high to be corrected entirely by the methods described above.[3]

Preventive Maintenance

Preventive maintenance, the practice of anticipating trouble and avoiding it before it starts, is a practical method of minimizing repair expense and "outage" time.

A comprehensive preventive maintenance program, when properly undertaken, will more than pay for itself and benefit both the user of the equipment and the service technician performing the maintenance.

The following case history illustrates the value of preventive maintenance.

A new two-way system has been properly installed and checked for

---

[3] See "Suppression of Ignition Noise in Mobile Equipment," reference M-8B.

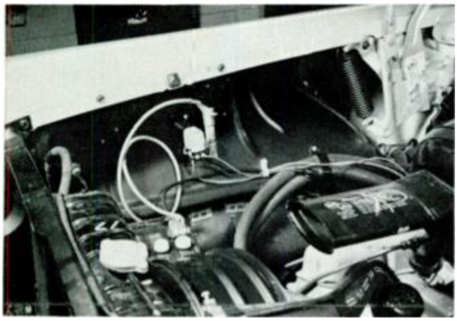

Here We See the "A" Relay and Fuse Block Mounted on the Fender Panel, near the Battery

normal operation and it is now up to the serviceman to maintain the equipment. Because the equipment is new and everything is working satisfactorily, the system will probably give months of satisfactory and normal service.

Eventually, however, complaints begin. Weak signals formerly received are no longer being heard, reception has become distorted, etc. The serviceman, on checking the system, cannot find any particular fault which is causing the trouble, so he adjusts the transmitter deviation and frequency until the system seems to have been restored to its normal condition--at least, the messages get through! The same trouble starts again. However, this time the complaints start sooner and they are more frequent.

The answer, of course, is that the serviceman has failed to check the entire system, and to maintain each transmitter, receiver and power supply at or near its normal performance. The power output of the transmitters gradually decreases due to tube aging; the sensitivity of the receivers also suffers, for the same reason, and the output from the power supplies decreases due to worn-out vibrators.

The failure of the serviceman to keep the equipment in normal operating condition forces him to perform a lot of extra work and he is constantly answering emergency service calls. It is also likely to produce an undesirable reaction on the owner of the equipment. He loses confidence both in the serviceman and in the manufacturer. Moreover, if he knows of other systems of the same make and type that give good service, he may readily see for himself that the serviceman is derelict in his duty, that he is actually falling down on the job. This owner of the equipment in the above example is actually losing money. He loses the advantage of having his two-way system in operation when it is needed; moreover, his cars and trucks are being tied up unnecessarily for service.[4]

Sources of Trouble

A good way to start is by analyzing the various sources of trouble. But first we must be able to recognize all the possible sources of trouble that can exist within the system. These, together with their accessories, include (1) the

---

4. See "System Maintenance of Two-Way Radio," reference M-8C.

primary power circuit, (2) the receiver, transmitter, power supply and control head including the microphone and speaker, (3) the intercabling between the units and (4) the antenna system.

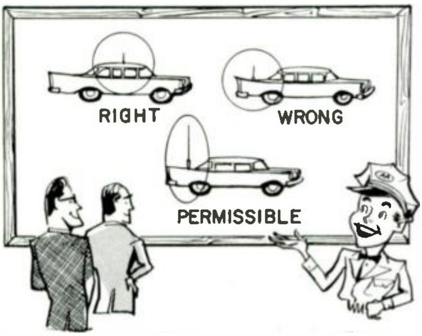

Wherever Possible the Mobile Antenna Should be on the Roof Top. Long (Lo Band) Antennas may be Mounted on a Fender if Necessary.

Primary Circuit

Under this head we must consider the various types of primary power commonly encountered in operating the equipment. The battery and generator system in the mobile vehicle is often a source of trouble. Where the battery of the vehicle furnishes the power to operate the equipment, we must remember that poor power output from the transmitter and poor receiver sensitivity may be due to trouble in the primary power source. The best test of a battery is probably the terminal voltage for a specific current drain (load). Commercial testers for checking batteries are available, but a battery usually gives plenty of warning when it is on its last legs. Batteries seldom fail all at once; they usually undergo several periods of abuse before they fail completely.

An old worn-down, or undercharged battery will measure no more than 6 (or 12) volts at the terminals and even less at the radio equipment. Depending upon the current taken by the equipment and the resistance of the cabling components, the voltage at the radio will be 0.5 to 0.7 volt lower than at the battery terminals. If the voltage drop between the battery and the radio is excessive, the reason may be found in a poor connection at the fuse block, relay, or ground connection, or the cable itself may be defective.

Relay contacts often become defective and require service or replacement. Fuses may not make proper contact in their holders, or they may develop high internal resistance. (A maximum drop of 0.1 volt is all that should be encountered across the fuse assembly.) Connections may loosen as a result of vibration and must be tightened or resoldered, whichever applies. Fuse contacts may become corroded, or loosen because of vibration.

In 12-volt systems certain conditions may cause the operating voltage at the radio during standby operation to be well above a safe value, resulting in premature failures within the equipment. Where these high voltages are noted it may be well to install a

Motorola primary voltage regulator such as that discussed in the lesson dealing with power supplies.

Receiver, Transmitter, Power Supply and Control Head

Most of the trouble shooting performed in 2-way equipment seems to be within the receiver and transmitter--possibly because the majority of troubles are found in these units (the receiver and transmitter in particular).

In the receiver, the sensitivity may become poor, its frequency may change, the squelch may be inoperative; a great many other troubles are possible. The most common faults in the transmitter are lack of power, off-frequency operation, and either too much or too little deviation. The most common trouble encountered in the power supply is a decrease in output voltage. While this usually resolves itself into a defective vibrator or inefficient rectifier. Other possibilities, such as a low primary source, for example, must never be overlooked.

Intercabling

Intercabling faults are most common where the equipment is subjected to considerable vibration. (Plugs sometimes become loose or connectors may develop a poor contact.) Cables may also rub against some sharp corner and produce a break or a short. A careful check of all cables and connectors is a must.[5]

The Antenna

Antenna systems are an often overlooked source of trouble. Broken antenna rods, shorted transmission lines, misoriented directional antennas, water-logged connectors, all constitute an enemy to normal operation of both the receiver and the transmitter.

How Often?

The question as to how often a system should undergo a routine check depends upon the type of equipment, its use, and the type of vehicle. Where the equipment is in continuous use and where it is installed in heavy trucks which are subject to a lot of vibration, it is likely to require close attention; a monthly checkup is certainly warranted. On the other hand, some installations may be put to only a limited use in a given period, in which case monthly inspections may not be required. In general, it would be reasonable to say that all units should be inspected after each 500-700 hours of operation. Of course, the FCC requires all transmitters to be checked at least once every six months for proper frequency, deviation and power.

---

5. See "On Locating Intermittants," reference M-8D.

How Are Monthly Checks Made?

For convenience we will refer to all preventive maintenance checks as monthly checks, for in most instances this will be the prevailing period. The question is to determine what this check consists of--how is it performed? In general, the procedure is threefold: listening, visual inspection, and meter measurements.

By listening to the receiver output the trained technician can often spot a defect. The sound may be weak or distorted, or the noise may be weak when the receiver squelch is open. With experience, the normal signal level at certain locations becomes known, and immediate comparisons can be made. Noisy reception, "hash" in the background, and similar effects also indicate improper operation.

Loose bolts, screws, and clamps, worn cables and mike cords, burned out pilot lamps, and relay arcing, are among the many things which can be located by means of visual inspection. Trouble can also be anticipated by visual inspection. It is quite possible, for example, that a loose plug or connector may not be a source of present trouble, and the equipment may not operate any better after a connector has been tightened; however, the loose connector could eventually be a source of intermittent trouble and might even result in damage to the equipment.

The visual inspection must also include searching for dirt--dirty contacts at relays, dirty or worn dynamotor brushes, corroded fuse holders, and the like. Cracked insulators and tubes operating "red-hot" are also located by means of visual inspection.

Visual inspection also includes what might be called "touch" inspection. Used with caution, the fingers make good detectors of improper temperature, both high and low. Fuses and fuse holders having poor contacts are readily located by the sense of touch. Transformers, relay coils and other units can also be checked by the fingers for overheating. A crystal holder and heater assembly which is cold, or a tube that normally should be warm but isn't, can be detected by "feel."

Caution must be exercised, however, for certain units (tubes and high-wattage resistors in particular) may be too hot to touch without burning one's fingers. Care must be taken that the high voltage circuits are not touched. For this reason the power should first be turned off. (Most components will retain their heat for some time afterward.)

Meter readings are perhaps the greatest aid for evaluating the operation of the receiver and the transmitter. They can be quickly taken, and they give an immediate idea of receiver sensitivity and transmitter power output. Moreover, with the base station signal

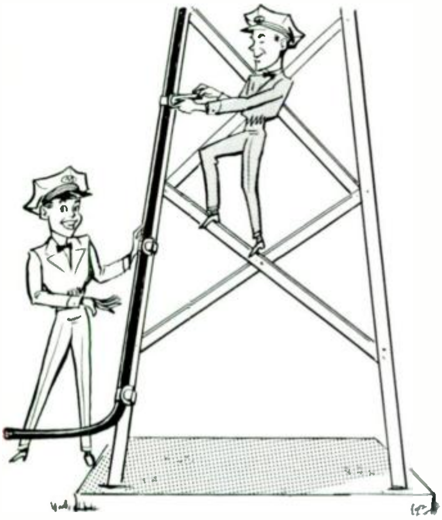

In Base Station Installations the Transmission Line Must be Well Secured to the Tower.

coming into the receiver (assuming the transmitter frequency is correct), the netting of the receiver frequency to that of the base transmitter can be effected immediately by this means. Netting means that all the units within one system are placed on the same frequency.

A frequency monitor, a deviation indicator, and a wattmeter can be used to measure the frequency, deviation, and power output of the transmitter; voltmeter readings at the battery and at the input to the equipment indicate the condition of the primary power source. Because the transmitter and receiver both depend upon the supply voltages for normal operation, these voltages must be included in the routine check. The power supply voltages can be conveniently determined by the use of meters.

Specific Checks to Make-- Check List

Figure 4 shows a check list which can be used when making monthly inspections. (The procedures listed are those which have been previously discussed.) This list applies to mobile units only. For base station installations, certain changes would have to be made in the list. The specific items thus vary from system to system, depending upon the service, the nature of the equipment or other factors, but this is not important. What is important is that certain physical and electrical aspects of the equipment are inspected systematically.

While the length of this list seems to be rather formidable at first glance, the complete check can be completed in 30 minutes by a competent technician. This is assuming, of course, that no great amount of service work or trouble shooting is involved. The list need not be followed in a definite sequence. It may be desirable to take the meter measurements and net the frequency of both the receiver and the transmitter before performing the operational check. Or, if the operational check is performed first and any adjustments are made on the equipment, a final operational check should then be made.

No check list is intended to be an absolute must for each inspection. In systems where the audio quality is good, for example, it may not be necessary to check the amount of deviation every month nor will a frequency adjustment be required if the receiver frequency is closely netted to that of the base transmitter. (This check is made by merely observing the meter reading at position 4 with the base carrier applied.)

A Record of Routine Meter Readings Allows the Serviceman to Correct Minor Troubles, thereby Avoiding "Outages" and Expensive Repair Costs.

Off-frequency operation of some of the equipment is often a prime cause of poor system performance. Hence, for the purpose of maximum system operation, it is important to keep the system netted. Without system netting, full advantage of the system cannot be realized or maintained. System netting is even more essential to narrow-band (split-channel) operation.

Routine observation of transmitter deviation also pays off in continued good performance, for full advantage of FM communication cannot be realized where the system is either underdeviated or overdeviated. A word of warning in this matter is apropos at this point. It is almost never necessary to change the setting of the deviation control at the transmitter. If the deviation is not correct, the serviceman should find out why it has changed and correct the trouble at the source, rather than compensating for this trouble by operating the deviation control. To do so may correct the transmission for the time being but it will not correct the original fault, and future trouble may be expected.

The advantage to the serviceman in making and recording these checks will be evident from the following example. Let us suppose that the reading at the grid of the final stage in the transmitter (position 6 on the meter) shows a gradual decrease over a period of several months. The individual decrease for any one month may not be great enough to require attention, but after several months it becomes too low to be disregarded. By having a record of this gradual decrease, the serviceman immediately knows that this should be checked carefully, for if the drive to the final becomes too low, the tube may be damaged. By maintaining the grid drive at the required level, the life of the final amplifier tube is increased and in this manner its premature replacement is avoided.

Besides saving his own time, the serviceman who keeps a record such as shown in figure 4 will be in possession of a valuable tool for maintaining satisfactory relations with his customers. For one thing, the serviceman will find it convenient at some time or another to haul out these records and show the customer just how well his equipment is being watched. Where the customer is paying a fixed amount every month for each unit being serviced, he may have been wondering just what he was getting for his money. Without such a check list it may be difficult to convince certain individuals that they are spending their money wisely. The fact that you, the serviceman, maintain such a record and that you can tell the customer exactly what you have done to each of his units each month immediately classifies you as a businessman who takes care of his job in the proper manner.

Moreover, when you send your monthly bill to your customer, it is well to enclose a summary showing the various parts that have been used and the troubles that were found (and corrected) in each unit.

But we haven't mentioned the greatest advantage of all. By promptly correcting the trouble in a unit when it is not up to par, many breakdowns in the equipment are avoided; the customer gets the maximum use of his radio equipment and the amount of time lost in tying up the vehicles while the radio is being fixed is minimized. This is probably the greatest factor of all to use in selling your services to the customer.

Schedule Monthly Checks

All monthly checks should be performed on a scheduled basis--a particular day of the month should be reserved for checking the equipment for a particular customer. This again is good practice in the eyes of the customer. He is more likely to be satisfied with this arrangement, for he can schedule his vehicles accordingly. In the absence of such a schedule, you may find yourself wasting valuable time waiting for several hours to check a vehicle that is in use. Besides wasting time in waiting to service the vehicle, you leave a bad impression on the customer. Again, if you happen to catch a certain vehicle for a few minutes and start your inspection, it may be called into service right in the middle of the job. The only alternative is to wait until the car returns--more time wasted.

Much time is saved by having a definite checking schedule for each vehicle; and the entire operation becomes more efficient. Certainly more units will be checked in a given time, compared to the number that can be checked when you have to wait until the vehicles are available. Moreover, if various test instruments have been set up for these checks, it is obviously more efficient to check the complete vehicle at one time. Where only half of it can be checked, the serviceman must get these instruments ready again at another time, in order to test the rest of the units.

Base Station Checks

The tests prescribed in figure 4 apply particularly to mobile equipment; several additional checks must be performed at base stations, especially if the base station is remotely controlled. At a base station, we seldom have the problem of low primary power to contend with but there is always the problem of voltage regulation. Poor regulation of the AC source can seriously affect the operation of the equipment. It is also important to make periodic checks of standby equipment (when such equipment is provided) in order to make sure that it will operate as required in case of power failure.

Where base station antennas are mounted on towers, lights may be required and they must be checked. (The FCC has issued rigid regulations on this subject which must be followed.) Where remote control is used, proper line voltages are a must. This is true whether the controlling voltages are required to switch frequencies or to establish the level of the modulating signal. Line levels, hum balance, and other adjustments should be checked periodically.

The specific tests to be made on a given base station installation will depend on the equipment being used. The specific factors to be checked each month may be determined from the instruction manual and a chart prepared accordingly. This chart not only becomes a handy device but, with proper notations added, it will satisfy the FCC regulation requiring that a log be kept on all service and adjustments of the base transmitter. The chart must be kept at the base station and be available for inspection at all times.

Specialized Equipment

Certain specialized equipment (such as the Motorola Private Line, Quik-Call, etc.) requires additional tests. Again, the specific checks will depend on the equipment and the application to which it is put. The variations are too numerous to list here, but details will be found in the appropriate service manuals.

MONTHLY INSPECTION CHART

MOBILE 2-WAY RADIO

SYSTEM ____________ UNIT# ____________

1) OPERATION	JANUARY	FEBRUARY	4) MEASUREMENTS	JANUARY	FEBRUARY
Receiver Squelch	X		Receiver		
Receiver Volume	X		Test Set Position 1	5	
Audio Output	Normal		2	12	
Reception	Normal		-4	+1	
Mike Button	X		5	28	
Contact to Base	Report Normal		6	24	
Contact to Others	Weak to Mobile #2		(Vol & Sq Clockwise) 8	15	
Contact on Freq #2	X		20-db Quieting	.5 uv	
2) VISUAL INSP.			B Supply	190 V	
Green Light	X		Receiver Netted to Base	X	
Red Light	X		Noise Idling	-1	
Mike Connector	X		Transmitter		
"A" Power Relay Connections	X		Test Set Position 2	22	
Fuse Contacts	X		3	13	
Battery Connection	X		-4	8	
Power Plug at Unit	X		5	16	
Ground Terminal	X		6	11	
Control Head	X		(B+ times 20) 7	340 V.	
Unit Mounting	X		(A supply X 0.3) 8	6 V.	
Antenna Mounting			Motor Idling		
Antenna Connector			PA	25	
3) TOUCH CHEEKS			Frequency Netted	X	
Rec. Crystal Warm	X		Deviation Check	X	
Trans. Crystal Warm	X		Mike Output	X	
Transformers Normal	X		Power Output	25 Watts	

Check Conducted By: E.M.
Date: JAN. 4/58

FIGURE 4

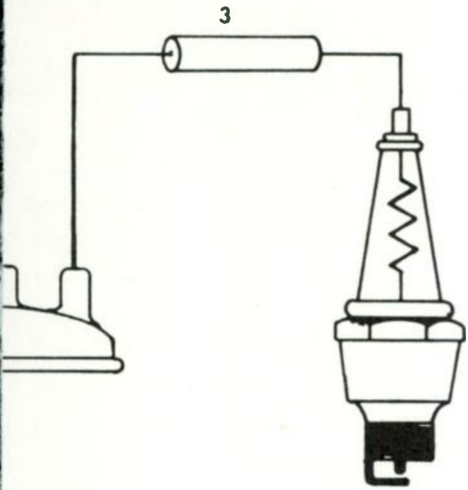

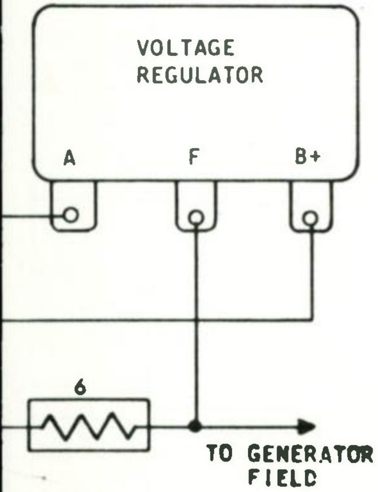

THESE REMEDIES MAY BE USED IN ITS ENTIRETY OR IN PART, ACCORDING TO THE NEEDS OR LIMITATIONS OF THE INDIVIDUAL INSTALLATION. (SEE TEXT FOR COMPLETE INFORMATION.)

REF. SYM.	DESCRIPTION
1.	COAXIAL CAPACITOR, 0.1 MF.
2.	SUPPRESSOR CABLE
3.	RESISTIVE WIRE
4.	RESISTOR SPARK PLUG
5.	COAXIAL CAPACITOR, 0.5 MF.
6.	CARBON RESISTOR, 3.3 OHMS, 1W
7.	BY-PASS CAPACITOR, .002 MF.

ESSION DETAIL

STUDENT NOTES

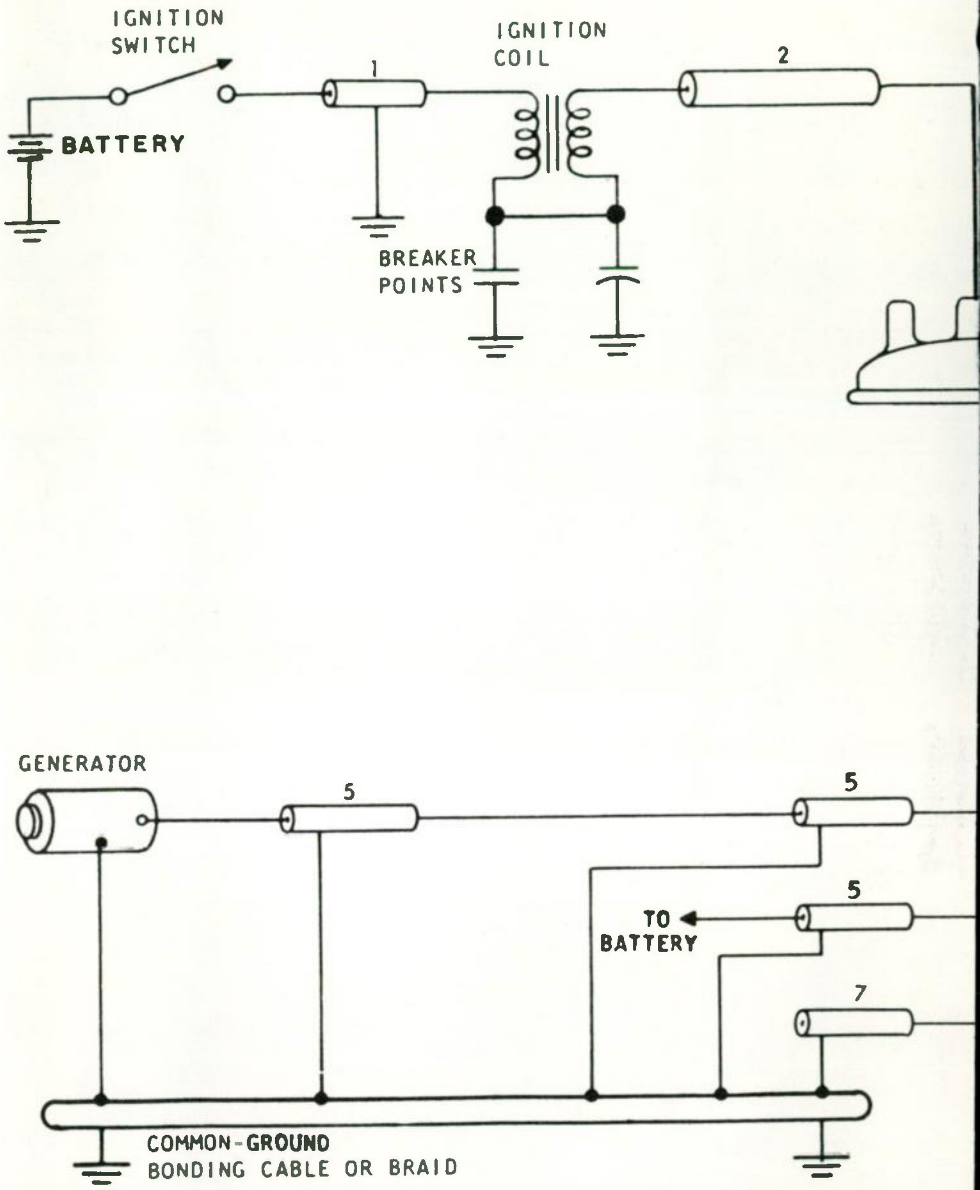

TYPICAL NOISE SUPPR
FIGURE

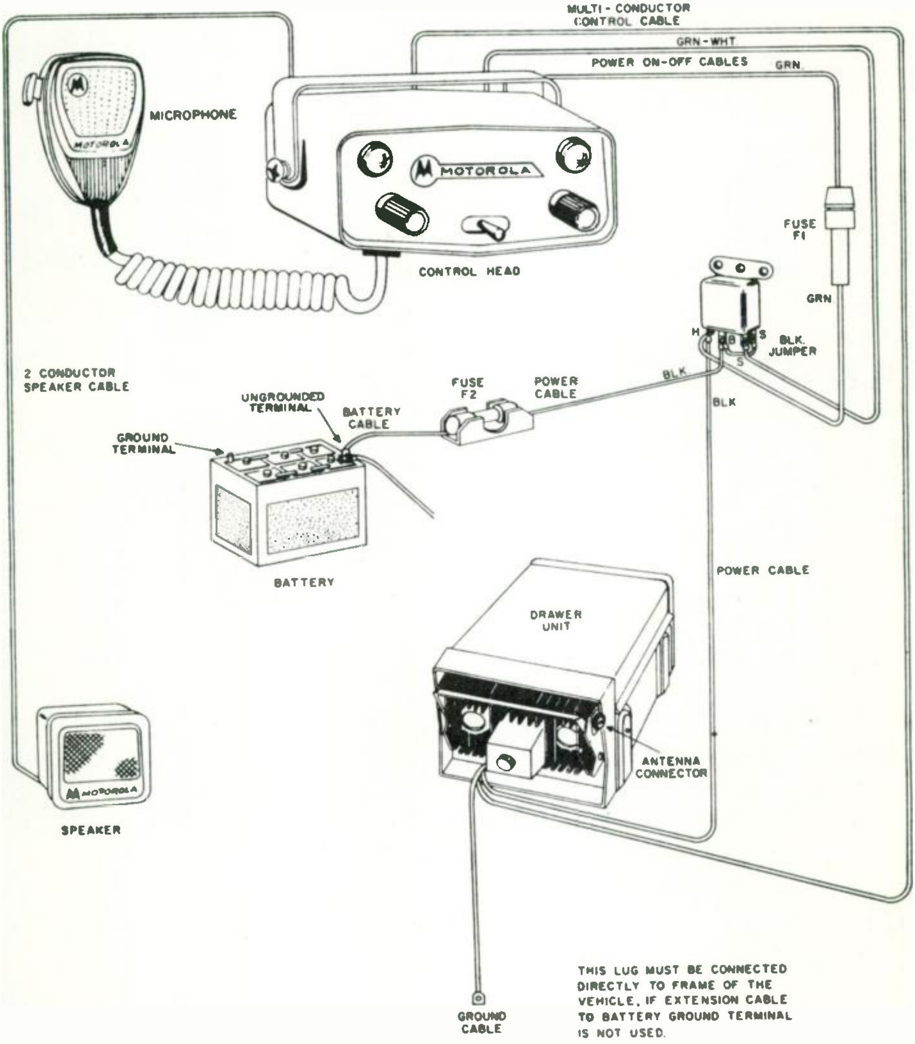

REAR MOUNT MOBILE CABLING DETAIL
FIGURE 2

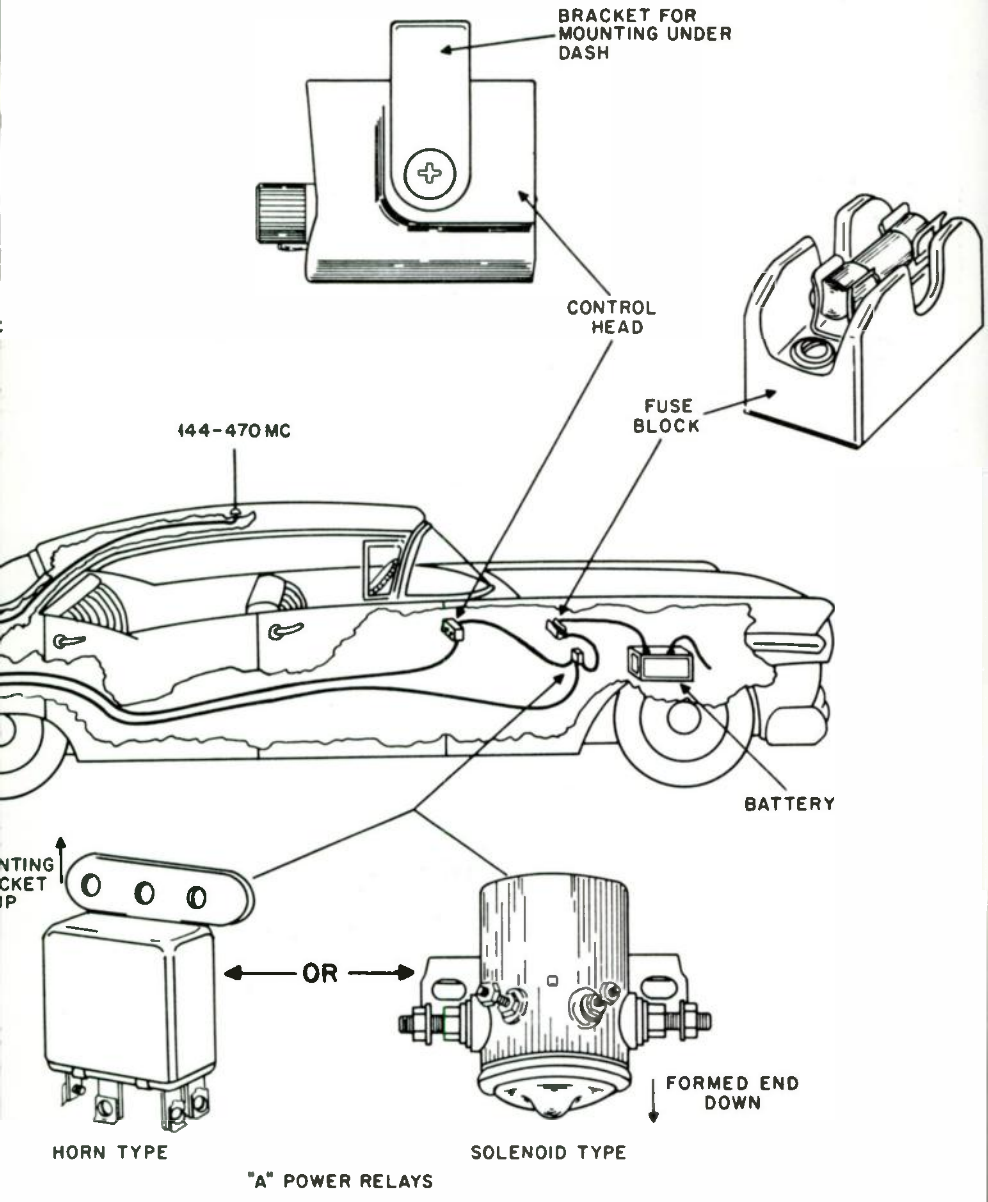

STALLATION DETAIL
E 1

STUDENT NOTES

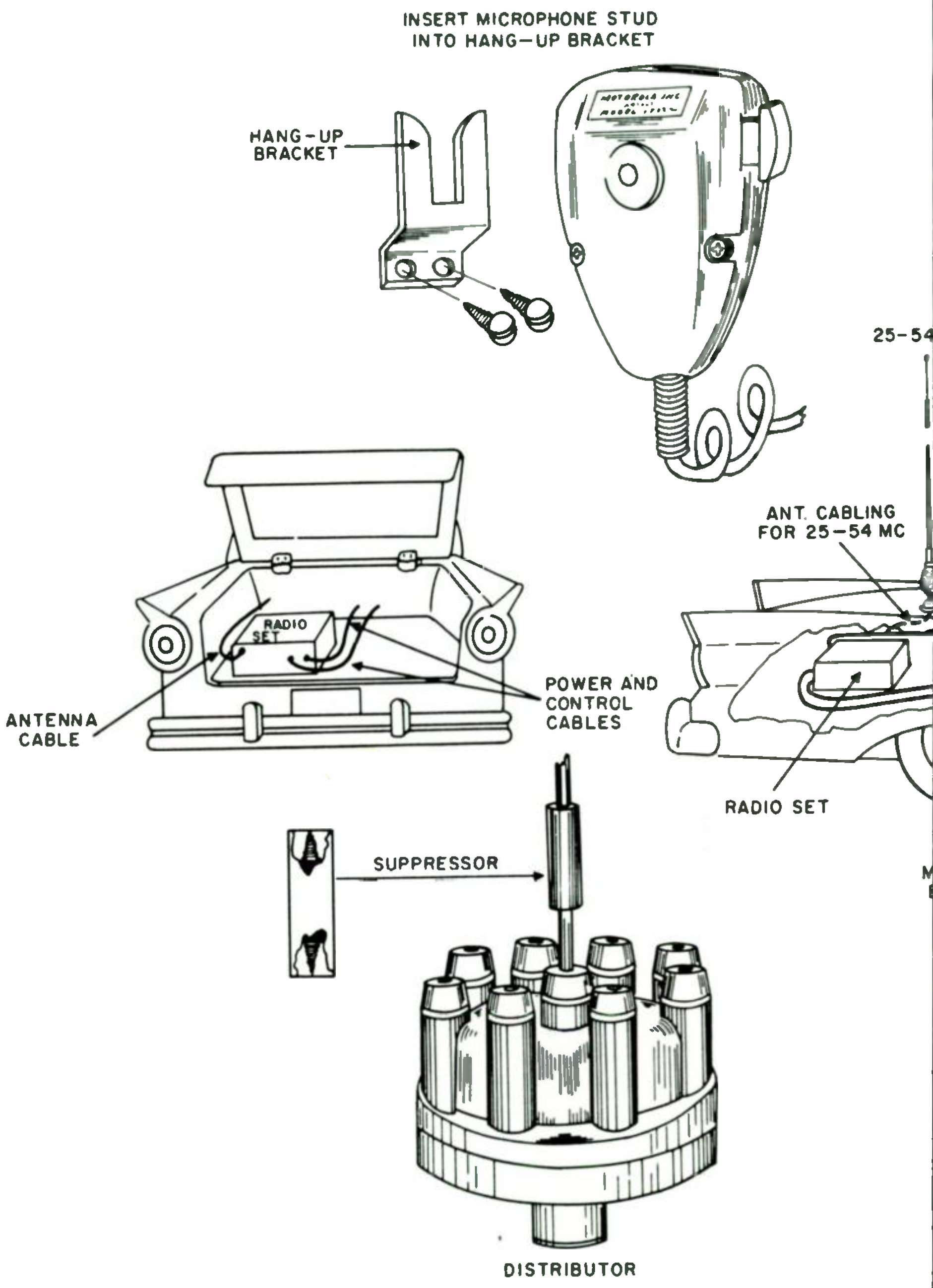

MOBILE REAR MOUNT
FIGU

Motorola Training Institute

4501 West Augusta Blvd., Chicago 51, Ill.

Please PRINT or use STAMP

Name ______________________________ **Student No.** ______

Street __________________ **Zone** ____ **Date** ______

City _______________ **State** ________ **Grade** ______

EXAMINATION LESSON MA-8

1. In the mobile two-way radio installation, the frame of the car is used as a common connection for all of the units to the primary source.
TRUE ________ FALSE ________

2. Fender-mounting the antenna for a mobile low-band unit will provide maximum coverage in all directions.
TRUE ________ FALSE ________

3. The A relay should be mounted with its contacts down. The main reason is that

A. The relay operates better ________
B. Any water can drain out of the relay ________
C. It reduces the arcing at the contacts ________

4. A cavity is installed at the input to the base station receiver. This cavity should be tuned to

A. The interfering signal frequency ________
B. The receiver channel frequency ________
C. The adjacent channel ________

5. Noise suppression in the mobile radio is mainly concerned with

A. the ambient noise coming into the antenna from external sources ________
B. the receiver noise ________
C. noise due to the ignition system ________

6. The two "filters" normally required for suppression of ignition noise are

A. Distributor suppressor ________
B. Resistor-type spark plugs ________
C. Oil gauge bypass ________
D. Generator bypass ________

7. Noise balancing is performed under the following conditions:

A. The car motor is running ________
B. The car motor is not running ________
C. The receiver has already been aligned ________
D. The discriminator secondary has not yet been set to zero ________
E. The antenna is removed from the receiver input ________

8. Which of the following may be part of a preventive maintenance program?

A. Check the netting of all the receivers ________
B. Keep a record of the meter readings of all the units ________
C. Check the deviation of the transmitters ________
D. Clean the dust from the units, connectors, etc. ________

9. Noise heard in the receiver installed in a moving vehicle is usually caused by

A. Ambient "noise" from the surrounding area ________
B. Static from the wheels ________
C. Gauges, regulators, etc. ________
D. The transmitter ________

10. Control and power cables in the mobile vehicle may follow any convenient routing to utilize available holes, etc.
TRUE ________ FALSE ________

national

MOTOROLA

RADIO COMMUNICATIONS

service

national

MOTOROLA

RADIO COMMUNICATIONS

service