IRE Transactions on AUDIO

Volume AU-10 **JULY-AUGUST, 1962** **Number 4**

Published Bi-Monthly

TABLE OF CONTENTS

CONTRIBUTIONS

PUBLISHED BY THE
Professional Group on Audio

IRE PROFESSIONAL GROUP ON AUDIO

The Professional Group on Audio is an organization, within the framework of the IRE, of members with principal professional interest in Audio Technology. All members of the IRE are eligible for membership in the Group and will receive all Group publications upon payment of an annual fee of $2.00.

Administrative Committee for 1962-1963

R. W. BENSON, *Chairman*
Robert W. Benson & Assoc. Inc., Nashville, Tenn.

F. A. COMERCI, *Vice Chairman*
CBS Laboratories
Stamford, Conn.

D. E. BRINKERHOFF
General Motors Corp.
Kokomo, Ind.

E. E. DAVID, JR.
Bell Telephone Laboratories, Inc.
Murray Hill, N. J.

D. F. ELDRIDGE
Memorex Corp.
Palo Alto, Calif.

W. H. IHDE
General Radio Co.
Oak Park, Ill.

M. COPEL, *Secretary-Treasurer*
156 Olive St.
Huntington, L. I., N. Y.

H. S. KNOWLES
Knowles Electronics
Franklin Park, Ill.

J. F. NOVAK
Jensen Manufacturing Co.
Chicago 18, Ill.

H. E. ROYS
RCA Victor Record Div.,
Indianapolis, Ind.

W. C. WAYNE
Baldwin Piano Co.
Cincinnati, Ohio

IRE TRANSACTIONS® ON AUDIO

Published by The Institute of Radio Engineers, Inc., for the Professional Group on Audio, at 1 East 79 Street, New York 21, N.Y. Responsibility for the contents rests upon the authors, and not upon the IRE, the Group, or its members. Individual copies of this issue may be purchased at the following prices: IRE members (one copy) $2.25, libraries and colleges $3.25, all others $4.50. Annual subscription price: non-members $17.00; colleges and public libraries $12.75.

Editorial Committee

MARVIN CAMRAS, *Editor*
Armour Research Foundation, Chicago 16, Ill.

Associate Editors

Acoustics, Speech, Music, Noise
D. W. MARTIN
The Baldwin Piano Co.
Cincinnati 2, Ohio

Circuits and Components
A. B. BERESKIN
University of Cincinnati
Cincinnati 21, Ohio

Instrumentation
W. H. IHDE
General Radio Co.
Oak Park, Ill.

Recording and Reproduction
B. B. BAUER
CBS Laboratories
Stamford, Conn.

Special Features and News
H. C. HARDY
Hardy and Associates
Chicago, Ill.

Systems and Applications
J. R. MACDONALD
Texas Instruments, Inc.
Dallas 9, Tex.

Transducers
P. B. WILLIAMS
Jensen Manufacturing Co.
Chicago 38, Ill.

COPYRIGHT © 1962—THE INSTITUTE OF RADIO ENGINEERS, INC.
Printed in U.S.A.

All rights, including translations, are reserved by the IRE. Requests for republication privileges should be addressed to the Institute of Radio Engineers, 1 East 79 Street, New York 21, N.Y.

World Radio History

Message from the New Chairman

DURING the next few years, members of the IRE Professional Groups will have the added responsibility of making the merger with the AIEE become effective. The Groups have had the advantage of being sufficiently small so that many members may actively participate in the affairs of their professional society. It is anticipated that the PGA will add considerably to their membership with the acquisition of almost double membership in our parent society. It is hoped that the present members of PGA will welcome new members and encourage them to participate in our meetings, read our TRANSACTIONS and publish articles when they pertain to our aspect of engineering.

The officers of our Group are making additional efforts toward planning meetings. Sessions at the New York meeting have been a regular activity of PGA. However, a regularly scheduled fall meeting has also seemed desirable. With the numerous activities of various organizations in the fall, the choice of a meeting place is difficult when considering geographical location, etc. Through adequate advance planning, we are attempting to better serve our membership through scheduled fall meetings in various parts of the country.

In the past year, you have all read and talked about the proposed merger. You have undoubtedly wondered how it will affect the Group structure of the IRE and, more particularly, your own specific interests. Your Administrative Committee and I would welcome knowing your desires and suggestions concerning the activities of the PGA so that we, in particular, may strengthen and advance audio activities during the coming period of transition.

ROBERT W. BENSO

The Editor's Corner

ZILCH'S PRINCIPLE, A GENERALIZATION OF MURPHY'S LAW

One vacation day, as Mr. Zilch sat under a palm tree contemplating the innate perversity of inanimate objects, a coconut fell, narrowly missing his cranium. Zilch's trend of thought turned towards broad, sweeping generalizations. He had long been familiar with Murphy's Law, which states that at critical or embarrassing moments in an engineer's career:

> If anything can possibly go wrong, it will.

Murphy's Law is better appreciated by experienced engineers than by beginners. For example, one can rehearse an important demonstration a thousand times. Unknowingly a minor component is wearing out. When does it first fail? You guessed it: when all the vice-presidents fly in to take a look.

Zilch generalized as follows:

"Inanimate objects, my eye. This happens also with animate objects, and even more so. Why did Ruthie break out with measles just as we were packed for vacation?

"It happens on a grand scale in nature. The worst rainstorm of the year began right after we washed all the windows.

"Maybe these things happen especially to me. I always was a *schliemiel*. No, it can't be that. Everyone complains about the same thing. So it must be that things always turn out bad for everybody.

"But, wait a minute. Suppose I am seeding my lawn at the same time as the neighbors have a backyard picnic. What happens then? Will it rain, or won't it?"

Suddenly, in a flash of genius, the answer came to him. Zilch's Principle may be stated crudely as follows:

"If an event can happen in two or more ways, it will always happen in such a way as to cause the maximum bother to the most people."

Or more elegantly:

"The summation of the products of the inconvenience factor and the individuals affected tends to be maximized."

$$\sum_{i=1}^{i=n} I_i N_i \to \max.$$

Only after he had tested it thoroughly, did Zilch realize the sweeping implications of his Principle. Just as Einstein's first theory was a special case of his later generalized principle of relativity, so Murphy's Law is seen to be only a special example of Zilch's Principle.

By applying his Principle, Zilch realized that the question of rain depended not only on his lawn and the neighbor's picnic, but also on what could frustrate many other people.

Often, one seems to be able to influence events, as for example if one carries an umbrella, it is unlikely to rain that day, and vice versa. This is explained by a corollary:

"Where there is a near balance of plus and minus inconvenience factors with regards to an event that affects a large population, then the acts of a single individual can be the determining factor."

As he thought more about it, many other things that used to be puzzling fell neatly into place—superstitions that had been handed down for centuries, primitive tribal customs, making the telephone ring for you while taking a bath, game theory, visits by your mother-in-law.

Mr. Zilch is as enthusiastic about his discovery as Archimedes was about Archimedes' Principle. He has asked me to publish it in the Editor's Corner of TRANSACTIONS ON AUDIO, where it will be seen by the appreciative audience it deserves.

Doubtless there will be skeptics. As with all basic truths, Zilch's Principle cannot be proved, but must be accepted because of intuition and experience. This is also true of other important principles such as the Conservation of Energy and Matter, the postulates of Mathematics, the invariance of the speed of light, the laws of thermodynamics, etc.

As this new Principle becomes better known and appreciated, we look forward to many practical applications in fields which formerly were left to chance, or where the Principle had been used unknowingly. It may even become the basis for an entirely new branch of science.

MARVAN CAMRAS, *Editor*

PGA News

CHAPTER NEWS

Ann Arbor

"Pulse Comparison in Acoustic Waveguides" was presented by K. Walther of Bendix Research Laboratory, Detroit, Mich., on January 17, 1962.

A talk on "Sources and Characteristics of Sounds at High Altitudes" was given by J. Wescott of the University of Michigan, Ann Arbor.

Boston

At a meeting on December 12, 1961, A. D. Grinnell of Harvard Biological Laboratories, Cambridge, Mass., talked on "Neural Correlates of Echo Location in Bats."

On March 22, 1962, K. N. Stevens of the Massachusetts Institute of Technology, Cambridge, Mass., presented a paper on "Machine Generation and Recognition of Speech."

Chicago

"Transducers for the Measurement of Sound, Vibration, and Strain," by G. W. Kamperman of Bolt Beranek, and Newman, Inc., was the subject of a meeting on January 16, 1962.

On February 21, R. Schorey of RCA Victor told about a "Novel Stereo Recording Technique."

The March 9th meeting featured a panel on "High Fidelity—Where Do We Go From Here?" which was moderated by Karl Kramer of the Jensen Manufacturing Company.

Dr. Harry F. Olson of RCA Laboratories, on May 11, described "The Phonetic Typewriter and Other Audio Information Processing Systems" at a meeting held in the Western Society of Engineers Building, Chicago. A summary of his talk appeared in the May, 1962, issue of *Scanfax:*

> *The processing of audio information involves the analysis of audio information, the conversion of this information to a code, and the final synthesis of the information from the code. Such audio information processing systems will give many new facilities for the reproduction of speech and music, the conversion of speech from the printed page, the conversion of speech to the printed page, the direct control of machines by speech, and the translation of speech from one language to another. Audio information processing systems now being developed include the phonetic typewriter, music and speech synthesizers, printer readers, and language translators.*
>
> *The present stage of audio information processing systems was outlined and some of the elements were described in detail.*

H. F. OLSON

Harry F. Olson received B.S., M.S., Ph.D., and E.E., degrees from the University of Iowa, and an Honorary D.Sc. degree from Iowa Wesleyan College. He has been affiliated with the Research Department of RCA, the Engineering Department of RCA Photophone, the Research of RCA Manufacturing Co., and RCA Laboratories. He is Director of the Acoustical and Electromechanical Research Laboratory of RCA Laboratories.

Dr. Olson is a past president of the Audio Engineering Society, past president of the Acoustical Society of America, past chairman of the Administrative Committee of the IRE Professional Group on Audio, and past director of the IRE.

He holds more than 90 patents, is the author of 85 papers and of the books, "Elements of Acoustical Engineering," "Acoustical Engineering," "Dynamical Analogies," and "Musical Engineering." He has received many honors, including the Modern Pioneer Award of the National Association of Manufacturers, and the John Scott Medal.

The final social meeting of the Chicago PGA season was held in Nielson's Restaurant on May 29, 1962.

Cleveland

"FM Stereophonic Broadcasting" was described by C. G. Eilers of the Zenith Radio Corporation on November 16, 1961.

"Information Storage Density of Magnetic Recording and Other Systems" was given at a joint meeting with the Akron Section by Marvin Camras of the Armour Research Foundation. The meeting was held at the Cleveland Engineering and Scientific Center on April 12, 1962.

Milwaukee

"Engineering Design Aspects and Problems of Modern Audio Equipment Manufacture" including a live demonstration of stereo audio equipment was presented on April 3 at the ESM Building in Milwaukee. The speakers were E. C. Fiebich, Manager of Engineering; W. Hannah, Junior Engineer; and J. Koppier, Design Engineer; all of the Heath Company, Benton Harbor, Mich.

On April 24, 1962, James F. Novak of the Jensen Manufacturing Company talked on "Performance Characteristics of Loudspeaker Arrays."

"Future Developments in Magnetic Recording" and a demonstration of the Armour tape-cartridge by Marvin Camras were the subjects of a meeting on May 22, 1962. A summary of the talk was: *Some intriguing magnetic recording devices, now in the laboratory stage, may become available in the future. These include low cost stereo cartridges with automatic changers for home music-systems; electronic-magnetic video recording with no moving heads; coil-less heads using Hall-effect principles; ferrography; and cross-field heads for 15-kc response at $1\frac{7}{8}$ inches per second.*

Philadelphia

Mrs. E. L. R. Corliss and T. Priestly of the National Bureau of Standards, Washington, D. C., talked on "Transient Distortion in Hearing Aids" on December 8, 1961.

"Diffraction Studies Using Temple's New Anechoic Chamber" was presented by M. Harbold and B. Steinberg of Temple University, Philadelphia, on February 2, 1962.

R. N. Hurat and A. C. Luther of RCA-Camden decribed a "Transistorized Video Tape Recorder—TR-22" on March 2, 1962.

San Antonio-Austin

"Audio Semi-Conductor Circuits" was given by D. Meyer of San Antonio at a meeting which took place March 23, 1962.

San Diego

H. Souther of Sonotec, Inc., Santa Ana, Calif., spoke on "Recent Developments in Miniaturization and Transistorization of Professional Audio Components" on January 26, 1962.

"Basic Requirements of Electronic Organs" were outlined by V. Smith of Veesmith Studios, San Diego, on March 29, 1962.

San Francisco

Dr. Vincent Salmon of Stanford Research Institute in Menlo Park, Calif., talked on "Measurements in Architectural Acoustics" at the December 6, 1961, meeting.

Note:

The Detroit Section and the Chicago Section had at least one successful joint meeting with the Acoustical Society of America local Chapter, or an organization closely allied to it. This type of meeting should be encouraged as it not only provides a larger base for attendance at the meeting, but also can spread the responsibility for providing speakers.

WILLIAM M. IHDE
Chairman, Committee on Chapters

A System of Electrostatic Recording*

D. E. RICHARDSON†, J. J. BROPHY†, H. SEIWATZ†, J. E. DICKENS‡, AND R. J. KERR‡

Summary—A new system of electrostatic recording in which electrical charges corresponding to the signal are injected into a thin insulating tape record has been investigated. The recorded charge pattern is produced by the application of ac or dc bias potentials to the recording electrodes, in addition to the signal voltage, and subsequently stabilized by treating the tape surface with ions to neutralize excess charge. Electrostatic recordings with extrapolated lifetimes in excess of several hundred years have been obtained.

INTRODUCTION

PREVIOUS electrostatic recording techniques have generally employed either electrical polarization of the record medium, based on electret[1] or ferroelectric[2] properties, or surface charging of an insulator.[3,4] These methods yield electrostatic records which lack the desired permanence. A new system of electrostatic recording reported here utilizes charge penetration into an insulating recording material. Such recordings are permanent and can be replayed repeatedly.

Early experiments showed that charge injection is most advantageous when charges of equal and opposite sign are produced at points opposite one another through the tape. This is accomplished by drawing certain plastic films (*i.e.*, Teflon FEP fluorocarbon film, "Mylar" polyester film, and polyethylene film) between a knife-edge electrode and a resilient conducting backing electrode. Bias and signal voltages applied to the electrodes produce a charge pattern in the film corresponding to the signal which may be played back inductively by passing the film through a similar electrode structure. Most of the results reported here refer to recording systems using "Mylar" tapes 0.25 inch wide and either 0.25 or 0.50 mil thick.

RECORDING TECHNIQUES

With the simple recording and playback arrangement of Fig. 1(a), little charge is injected into the moving tape until the electrode bias potential exceeds a threshold value as shown in Fig. 2. This motional tape current, which is a linear function of tape speed, demonstrates that electrical charge corresponding to the electrode potential is delivered to the tape. The signal-to-noise ratio (SNR) and other properties of such a recording

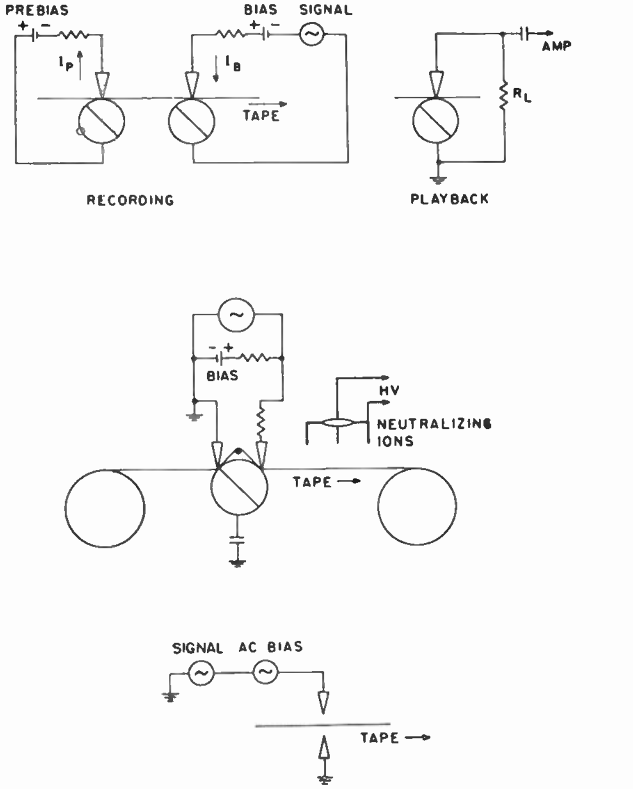

Fig. 1—Electrostatic recording and playback circuits. (a) Elementary recording and playback circuits. (b) Recording circuit for $I_B = I_P$, dc bias. (c) Recording circuit for ac bias.

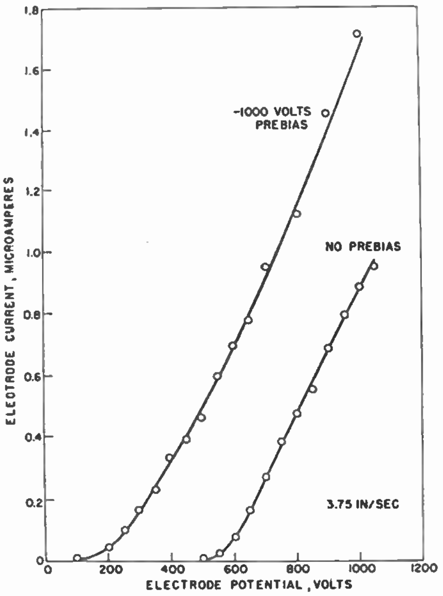

Fig. 2—Recording current characteristics for $\frac{1}{4}$-mil-thick, $\frac{1}{4}$-in-wide "Mylar" at a tape speed of 3.75 inches per second (ips).

---

* Received April 18, 1962. This paper was presented at the IRE International Convention, New York, N. Y., March 28, 1962.

† Armour Research Foundation of Illinois Institute of Technology, Chicago, Ill.

‡ Film Department, E. I. Du Pont de Nemours and Co., Wilmington, Del.

[1] R. E. Rutherford, U. S. Patent No. 1,891,780; December 20, 1932.

[2] C. F. Pulvari, U. S. Patent No. 2,698,928; January 4, 1955.

[3] F. Gray, U. S. Patent No. 2,200,741; May 14, 1950.

[4] V. C. Anderson, "Dielectric Recorder," *Rev. Sci. Instr.*, vol. 28, pp. 504–509; July, 1957.

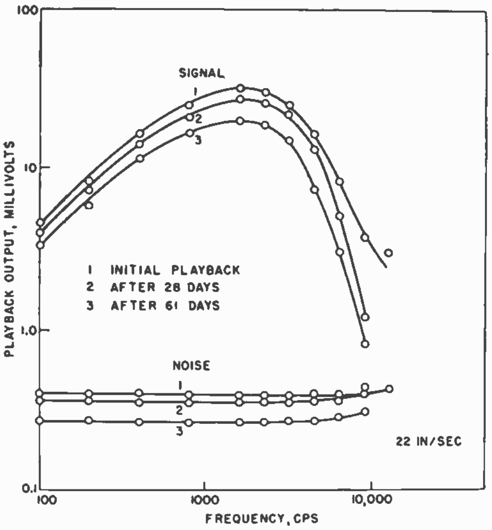

Fig. 3—Frequency response curves for dc bias electrostatic recording at 22 ips. Indicated noise levels are total wide-band noise with bias but without signal taken immediately before and after signal response reading.

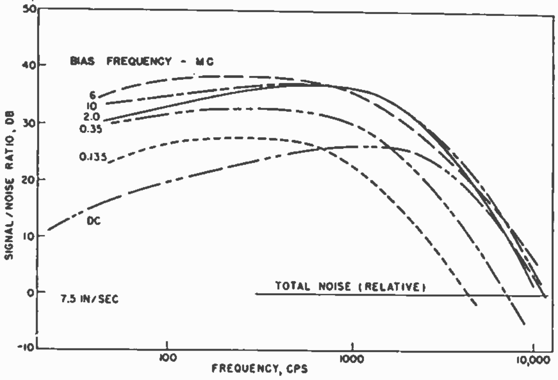

Fig. 4—Comparison of frequency response curves at 7.5 ips for various ac bias frequencies and for dc bias.

are measurably improved by subjecting the tape to a reverse polarity prebias treatment with a prior knife-edge and backing electrode combination. The subsequent motional tape current at the second electrode pair is labeled "-1000 volts prebias" in Fig. 2. In the absence of signal the net result of the prebias-bias treatment is an essentially neutral tape, for properly chosen values of electrode potentials. Signal voltages are applied only to the second electrode combination and result in a charge pattern interior to the tape corresponding to the applied signal. It is possible to erase this charge pattern by subsequently re-recording the tape.

Experiments have shown that maximum SNR, minimum playback distortion and maximum record life are obtained when the prebias electrode current is equal to the bias electrode current, which can be realized by proper adjustment of the bias and prebias voltages according to Fig. 2. The proper division of voltages may be obtained automatically through the use of the circuit in Fig. 1(b). Here the voltage of the single bias source divides between the bias and prebias electrodes such that $I_p = I_B$ on the average while the signal voltage is effectively applied only to the bias electrodes. Representative values for the bias potential and signal level in this circuit are 1500 volts dc and 100 volts rms, respectively.

Playback of these electrostatic records is simply accomplished by drawing the tape between a knife-edge and backing electrode combination as indicated in Fig. 1(a). Tape signal charges induce potentials on the playback electrodes which may be amplified by a conventional electronic amplifier. The magnitude of the signal depends upon the load resistance R_L and is of the order of 40 mv for $R_L = 10^6$ ohms. Typical playback frequency response spectra and wide-band noise levels are shown in Fig. 3. In the figure the noise data points refer to wide-band noise (10 cps to 20-kc bandwidth) taken immediately before and after each signal response point on adjacent regions of the tape record.

An effect similar to the bias-prebias combination in dc bias recording is achieved through the use of ac bias at a single pair of opposed knife edges, as sketched in Fig. 1(c). Recordings result which have a larger SNR than for dc bias, as indicated in Fig. 4. Present results also indicate less second distortion in the case of ac bias.

ION NEUTRALIZATION

The recorded tape is treated with an atmospheric ion bath prior to spooling after recording and after each playback. This ion neutralization treatment improves recording permanence, greatly reduces layer-to-layer print-through during storage. Present evidence indicates that the function of these ions is to neutralize uncompensated charge on the tape. The ion bath is produced by a high voltage corona discharge from pointed electrodes located between the recording electrodes and the take-up spool as indicated in Fig. 1(b). A similar ion source between the feed reel and the electrodes may also be employed, but is often unnecessary. The ion bath neutralizes net charge on the record medium produced by triboelectric charging or the recording process and is applied each time the tape passes through the electrodes.

NOISE

Noise in the electrostatic recording system is due to random electrical charge patterns in the tape and to recorded noise produced by the recording process. The playback noise spectrum of virgin tape, Fig. 5, indicates a very large low-frequency component, presumably the result of triboelectric charging during handling and

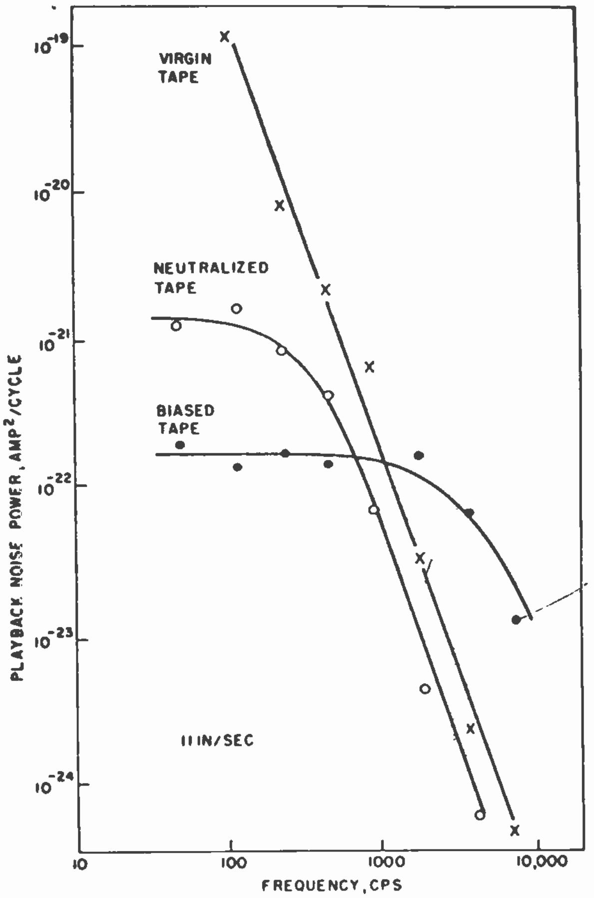

Fig. 5—Playback noise spectra at 11 ips.

spooling. This is greatly reduced by ion neutralization as also shown in Fig. 5. The noise spectra of neutralized tapes are quite reproducible and may be interpreted in terms of a stable random array of charged spots produced by air breakdown at the tape surface because of triboelectric charging. This charge pattern is altered by the application of bias and prebias voltages as indicated by the third spectrum of Fig. 5.

The recorded noise spectrum also can be analyzed in terms of a random array of (much smaller) charged spots produced by the recording process. These spots are in agreement with the observed spark-like character of the gas discharge at the electrodes during recording. The total wide-band recorded noise level is greater than that of neutralized tape, although, as the spectra indicate, disagreeable low-frequency rumble is much reduced. Therefore, dc electrostatic recordings are recording-noise limited with regard to SNR. Under ac bias the character of the recording discharge is such that the spark-like character is reduced and the SNR is improved as implied in Fig. 4.

RESOLUTION

The linear resolution of electrostatic records is influenced by the effective electrical width of the electrodes on both recording and playback. It is possible to analyze response curves such as in Figs. 3 or 4 in terms of an effective electrode width quite satisfactorily. A minimum wavelength of the order of 0.7 mil is obtained for the sample knife-edge playback electrode.

Playback resolution can be improved through the use of a shielded-blade electrode construction in which a center pick-up electrode is shielded on each side by a close-fitting electrostatic shield. This configuration restricts the region of tape effective in inducing signals on the active electrode and results in a playback electrode having a resolution equivalent to the distance between the shields. In application it is convenient to electrically drive the shields through the use of a cathode-follower input stage in order to reduce the capacitive loading effect of the shields. The improved resolution obtainable is indicated by the curves of Fig. 6 which were taken under identical conditions except for the size of the electrode gap between the shields.

Resolution limitation in recording appears to be associated with the gas discharge at the recording electrodes. The finite size of the charged spots produced in dc bias recording and the spread of the discharge away from the knife edge tend to introduce a minimum wavelength. In the latter regard, change in the ambient atmosphere is known to influence resolution to some extent.

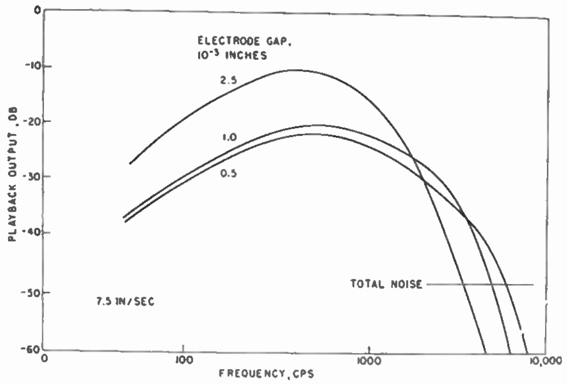

Fig. 6—Representative playback frequency response curves at 7.5 ips obtained with sandwich playback electrodes having various gap widths.

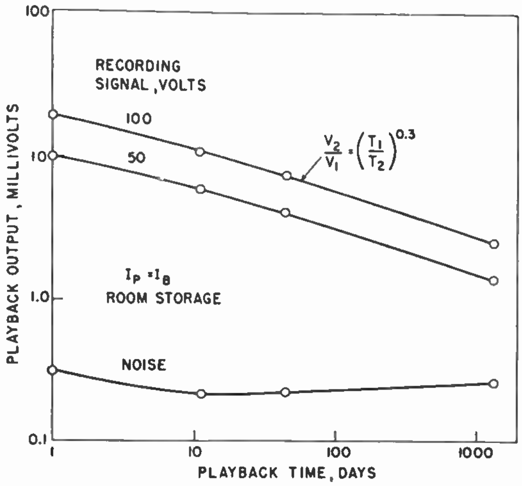

Fig. 7—Variation of signal and noise with time for "Mylar" tape stored in room ambient atmosphere.

Recording Life

One of the outstanding features of this new electrostatic recording system is the long record life, which is attributed to the particular charge distribution produced in the tape by the recording process. Typical signal and noise decay characteristics are shown in Fig. 7 for a tape stored under room ambient conditions. For a period of time following recording, the signal and noise decay together, preserving the SNR, while longer storage increases the noise somewhat, possibly due to a noise print-through effect. The signal decay may be reasonably represented by a power law as shown on the curve with an exponent of 0.3. Values of this exponent as large as 0.7 have been observed for recording prepared under nonideal conditions, for example when bias and prebias currents are not equal.

Tapes stored under low relative humidity conditions have even longer lifetimes than indicated in Fig. 7. At low humidity, exponents as small as 0.07 are observed. The life of such recordings is clearly of the order of hundreds of years. The other aspect of record life, multiple playback, appears to be affected by the ion treatment. Recordings given a suitable neutralization treatment can be played back hundreds of times with relatively small diminution of signal.

Conclusion

Based on these results it appears that the new electrostatic recording system derives its performance characteristics from the specific charge distribution pattern produced in the record medium by the recording process. The effect of ion treatment is to help preserve this pattern through neutralization of net surface charge produced by triboelectricity. The recording noise limitation on SNR in dc recording may be removed by ac bias. Linear resolution on the record is a function of both recording and playback processes but the limitation due to the latter may be largely eliminated by the proper electrode configuration. Excellent signal life, both with respect to storage time and multiple playback, is attainable. Further improvements in the system performance will result from a detailed understanding and control of the gas discharge at the recording electrode.

High-Impedance Drive for the Elimination of Crossover Distortion*

J. J. FARAN, JR.†, SENIOR MEMBER, IRE, AND R. G. FULKS†, MEMBER, IRE

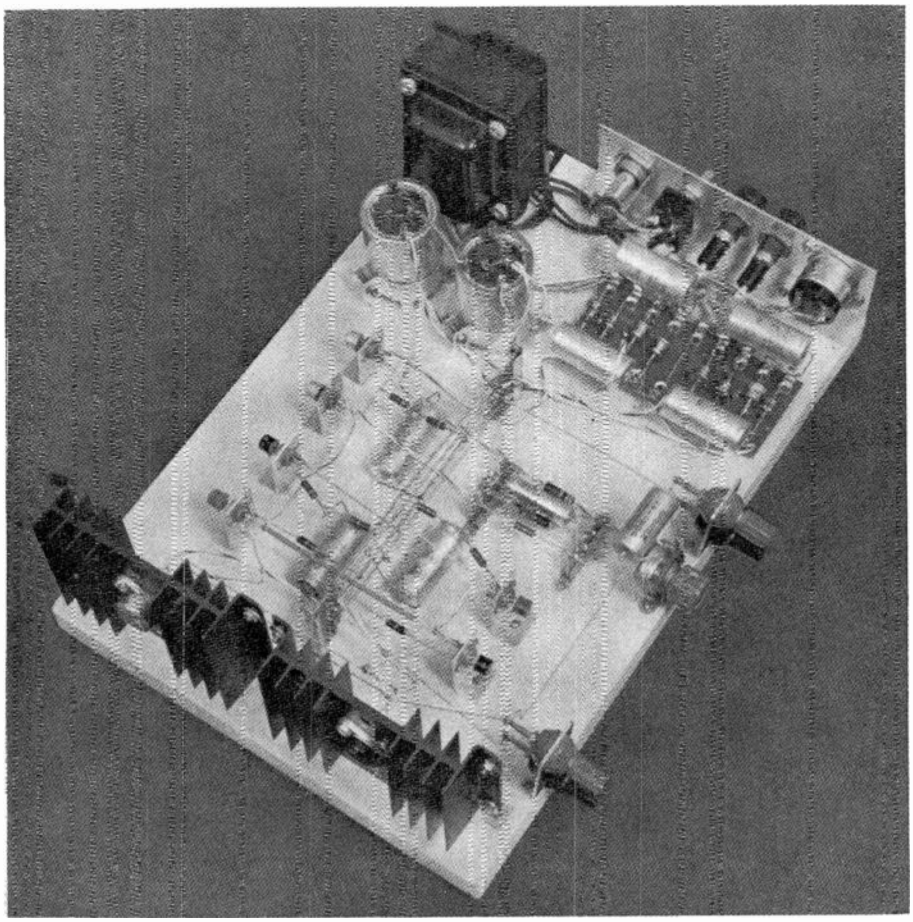

Breadboard of a 20-watt class B power amplifier making use of complementary symmetry.

Summary—**Crossover distortion in a class B transistor power amplifier can be greatly reduced by driving the output stage from a high-impedance source. Doing this capitalizes upon the fact that the current-to-current gain characteristic of a class B stage is much more linear in the crossover region than the voltage-to-current gain. High-impedance drive can be most easily applied to a complementary output stage, but can also be applied to two transistors of the same polarity if a driver transformer is used. In circuits of this type, no temperature-compensated bias arrangements are necessary, and "thermal runaway" is virtually impossible, as only one of the output transistors can be biased on at a time. Moreover, reverse bias is applied to the "off" transistor, reducing its turn-off time and minimizing the increase in power supply drain at high signal frequencies. Amplifiers designed according to this principle have operated with very low distortion and have exhibited unequalled thermal stability.**

INTRODUCTION

IN A push-pull class B amplifier, one output transistor ideally conducts current only when the input signal is positive and the other conducts only when the input signal is negative. Class B amplifiers operate with significantly greater power efficiency than class A amplifiers. The class B amplifier, furthermore, has negligible power consumption when there is no input signal. For these reason, and because transistors are especially vulnerable to heat, class B circuits are extensively used in transistor power amplifiers.

Unfortunately, crossover distortion is a characteristic of nearly all class B amplifiers. It occurs because of failure to accomplish a smooth transition from conduction in one output transistor to conduction in the other. Consider, for example, the complementary class B output stage of Fig. 1. A plot of its output voltage

---

* Received April 2, 1962. Revised manuscript received, April 16, 1962. Reprinted with permission from the *Solid State Journal*, August, 1961.

† General Radio Co., West Concord, Mass.

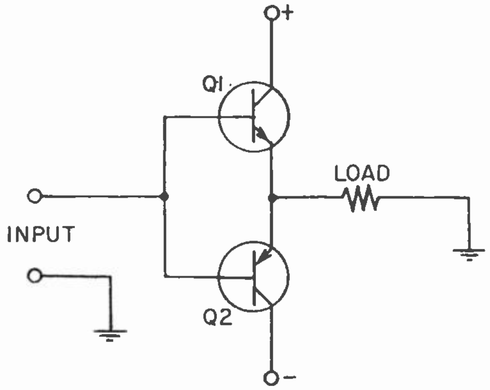

Fig. 1—A complementary class B emitter-follower power amplifier output stage.

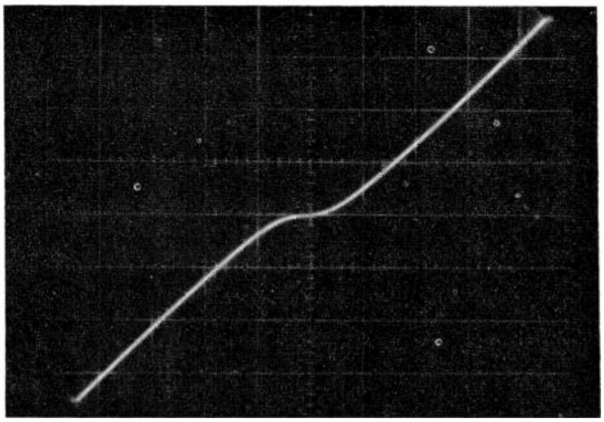

Fig. 2—Output voltage (vertical) vs input voltage (horizontal) of the output stage of Fig. 1. Q1, 2N1218; Q2, 2N176; load, 10 ohms. Both scales, 0.2 v per major division.

against input voltage is shown in Fig. 2. It can be seen that there is a region of input voltage around the zero level for which the output voltage is very small. This produces crossover distortion in a sine-wave input signal as illustrated in Fig. 3. This is a strong source of harmonic distortion as well as an almost complete loss of gain for small signals—a serious defect, for example, in servo amplifiers.

Various remedies have been devised for eliminating crossover distortion. One of these is simply to enclose the class B output stage in a loop with enough feedback to reduce the distortion to an acceptable level. However, this distortion is composed of frequencies much higher than that of the signal being amplified, so this method requires that the frequency response around the feedback loop be flat far above the highest frequency at which the amplifier is intended to operate. Another method is to apply a bias voltage to the base of each transistor to cause it to conduct slightly even when there is no input signal. This is a very effective method of preventing crossover distortion, but it creates another problem. The "standby" current in each transistor is strongly dependent upon temperature, increasing at higher temperatures. There is, therefore, serious danger of thermal runaway, in which further increases in current cause further increases in temperature, and so forth, until the transistors are permanently damaged. To prevent this, temperature-sensitive elements such as diodes or thermistors can be included in the base bias network to change the bias voltage in such a way as to hold the standby current constant. This method can correct satisfactorily for ambient temperature changes, but the temperature-sensitive element cannot instantaneously follow the temperature of the junctions of the transistors and there is danger that a suddenly-applied signal may heat up the transistors before the bias voltage is corrected. In such systems, although crossover distortion is eliminated, there is introduced the danger of thermal runaway.

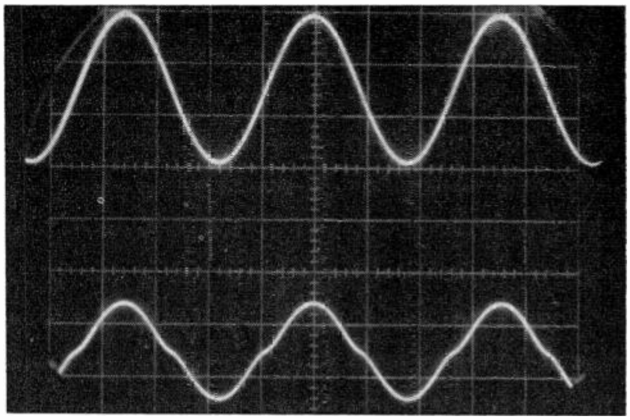

Fig. 3—Input voltage (upper) and output voltage (lower) of the output stage of Fig. 1 when driven from a low-impedance source. Q1, 2N1218; Q2, 2N176; load, 60 ohms. Both traces, 0.2 v per division.

HIGH-IMPEDANCE DRIVE

A method of operating a class B output stage so that crossover distortion is inherently eliminated is based on the discovery that the output voltage of the circuit of Fig. 1 much more closely reproduces the input current than the input voltage. To illustrate this, the output voltage of the circuit of Fig. 1 is plotted as a function of the input *current* in Fig. 4. By comparison with Fig. 2, it can be seen that the crossover distortion is no longer present. The residual nonlinearity visible near the crossover in Fig. 4 is due to the decrease of beta (h_{fe}) at very low current levels in each of the output transistors.

To reduce the crossover distortion, then, it is necessary to drive the circuit of Fig. 1 not with a voltage but with a current whose waveform is undistorted. Because the input impedance of the transistors becomes relatively high when the input voltage is near zero, the current must be supplied from a high-impedance source.[1] Then, at each axis-crossing of the input signal, the input voltage will "jump" from the voltage at which one transistor turns off to the voltage at which the other turns on. The input voltage is thereby auto-

---

[1] H. J. Woll, "Handbook of Semiconductor Electronics," McGraw-Hill Book Co., Inc., New York, N. Y., Section 11, pp. 11–33 ff.; 1956.

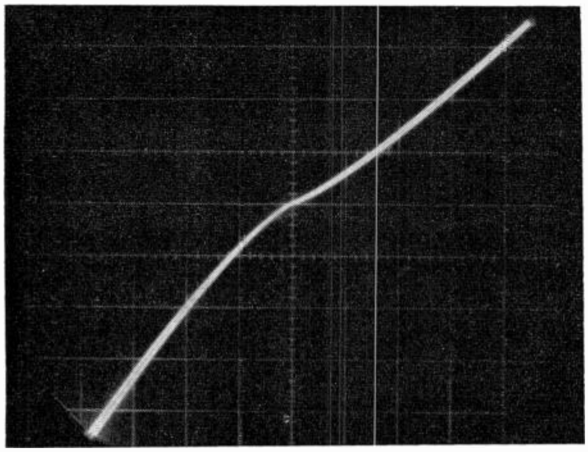

Fig. 4—Output voltage (vertical) vs input current (horizontal) of the output stage of Fig. 1. Q1, 2N1218; Q2, 2N176; load, 10 ohms. Vertical scale, 0.2 v per division; horizontal scale, 0.25 ma per division.

matically predistorted in such a way as to produce an output substantially free of crossover distortion. This system represents a sharp departure from the practice of driving emitter-follower circuits from low-impedance sources to take advantage of the inherent voltage feedback for reducing distortion due to nonlinearity of current gain.

It would appear that to drive this circuit from a very-high-impedance source would be the worst way to insure thermal stability. However, the interconnection of the two transistors itself provides the thermal protection. The most serious type of thermal runaway that might occur with the circuit of Fig. 1 would be current flow through the two transistors in series, from the positive power supply to the negative. With the bases and emitters tied together, however, if one transistor should become biased on (a necessary condition for thermal runaway), the other will be biased off by the same voltage. The runaway current path is very effectively interrupted by the transistor that is biased off, and so the thermal stability of this circuit is excellent.

A further advantage of the direct interconnection of the bases and emitters of the output transistors is that the reverse bias which is applied to the base of the "off" transistor comes from a relatively low-impedance source (the "on" base-emitter junction of the other transistor); this reduces the turn-off time of the transistor and lowers the current drain and power dissipation at high frequencies.

HIGH-SOURCE-IMPEDANCE DRIVER CIRCUITS

It is difficult to determine theoretically just how high the driving source impedance should be for any particular circuit. However, the following empirical formula can be used to estimate the magnitude of the crossover distortion:

$$d = \frac{KR_m}{R_s^2 I_{\text{in}}}$$

where

d is the total harmonic crossover distortion in per cent;

K is a constant found to be between 1 and 4 volts for germanium power transistors;

R_m is the maximum input resistance in the crossover region—on the order of 60 ohms for a common-base output stage and 2500 ohms for common-emitter and common-collector stages using germanium power transistors;

R_s is the source resistance; and

I_{in} is the input drive current in amperes.

A convenient rule of thumb is that the driving source impedance should be high compared to the maximum value of the input resistance in the crossover region.

Fortunately, it is possible to build a source using conventional transistors whose impedance is more than adequately high for most class B output stages. One of the possible configurations for such a circuit is used in the amplifier shown schematically in Fig. 5.[2] The high-impedance source for the output transistors is the junction of the collectors of Q3 and Q4. The impedance at this point is half the collector impedance of a grounded-base amplifier, and can easily be of the order of hundreds of kilohms. In order to maintain the voltage at this point at the correct dc level, it is necessary to use feedback. The feedback, however, cannot be taken directly from the junction of the collectors of Q3 and Q4 because a feedback resistor would itself lower the impedance at that point. Therefore, the feedback is taken directly from the output at the emitters of Q1 and Q2. In addition to maintaining the proper dc level at the output, the feedback is effective at signal frequencies for making the output impedance low and for reducing distortion from other sources such as beta nonlinearity and unequal betas in the output transistors. The voltage gain of the amplifier shown in Fig. 5 is approximately equal to the reciprocal of the voltage division of the feedback network, R1 and R2. This amplifier requires two positive and two negative power supplies. The lower voltage supplies, marked + and −, provide the high current for the output stage. The higher voltage supplies, marked ++ and − −, supply only the much smaller current required by the input and driver stages.

The average current in transistors Q3 and Q4 (which operate class A) must be at least equal to the peak base current required by the output transistors. Because they must conduct this much current steadily, the power dissipation in Q3 and Q4 may be considerable.

---

[2] J. J. Faran, Jr., "Elimination of crossover distortion in class-B transistor amplifiers," PROC. IRE (Correspondence), vol. 49, pp. 834–835; April, 1961.

It can be reduced to a much lower level if additional driver transistors Q7 and Q8 are added as shown in Fig. 6. The steady current in Q3 and Q4 can then be reduced in proportion to the current gain of Q7 and Q8. Q7 and Q8 operate class B and are protected against thermal runaway in the same way as the output transistors.

Fig. 7 is a detailed schematic diagram of a practical audio amplifier of this type and its power supply. The amplifier is designed to have a music-power rating of 20 watts and to work into an 8-ohm load.

The amplifier must not be directly connected to a load having dc resistance less than 8 ohms. If the output is connected to a transformer whose dc resistance is less than 8 ohms (as it would usually be), a capacitor must be connected in series to block the large current which might flow if there is a slight dc unbalance at the output.

An accidental short circuit on the output could ruin both output and transistors. The 1-ohm resistors are included to provide partial protection against such an occurrence. They limit the maximum sine-wave output

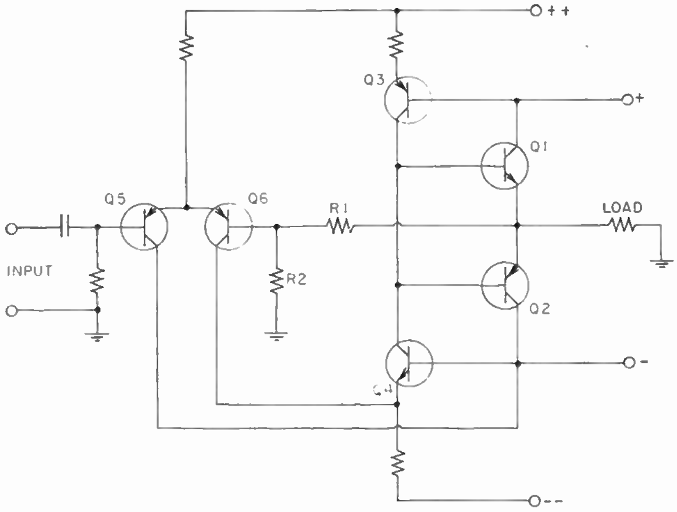

Fig. 5—A class B power amplifier using the complementary emitter-follower output stage of Fig. 1 driven from a high-impedance source.

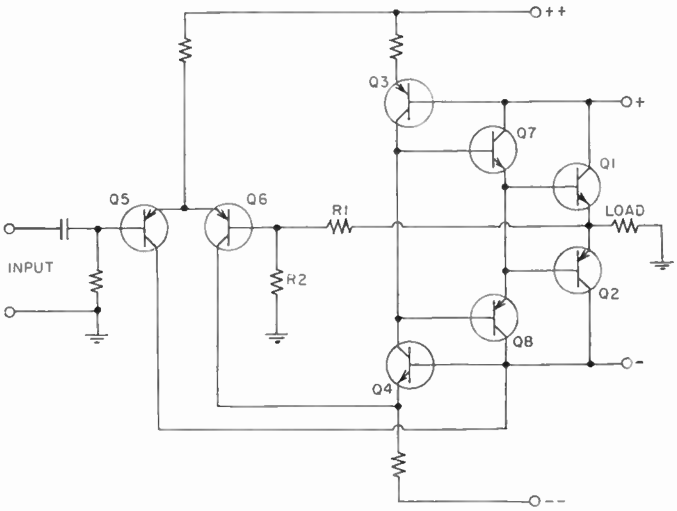

Fig. 6—The amplifier of Fig. 5 with additional class B drivers (Q7 and Q8) added.

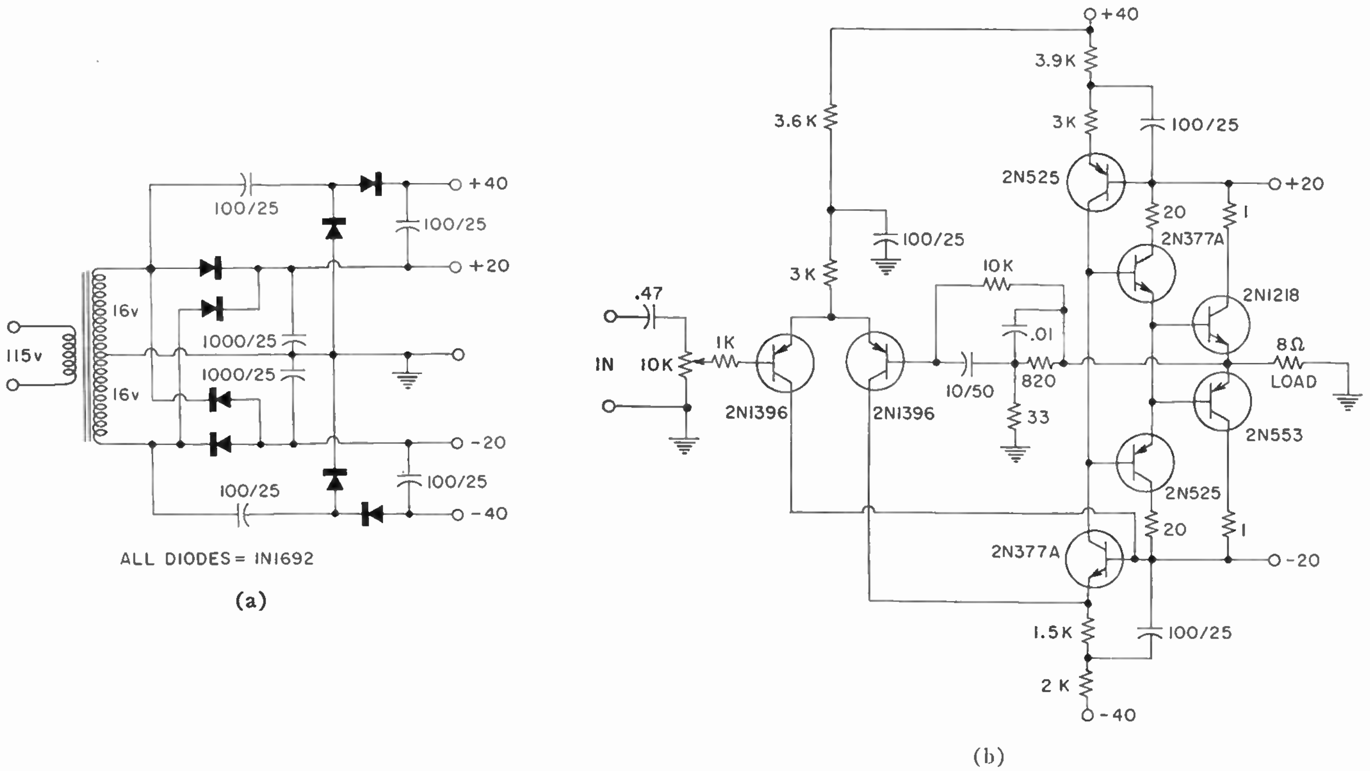

Fig. 7—Schematic diagram of (b) 20-w audio amplifier and (a) its power supply.

power to about 12 watts but the "music power" rating is still about 20 watts.

For lowest distortion, as in hi-fi applications, the current gains of the output transistors and of the two driver transistors should be closely matched. The power supplies do not require complicated regulation. The circuit is arranged so that ripple on the power-supply voltage does not cause any serious problem.

An audio amplifier of the type shown in Fig. 7 has produced 16-watt output into an 8-ohm resistive load with less than 0.03 per cent total harmonic distortion. There was approximately 34-db reduction in gain due to feedback. To achieve this performance, the output transistors were selected to have nearly equal current gains. This figure is quoted, however, to demonstrate the virtual elimination of crossover distortion. The distortion did not increase at lower output power levels.

OTHER COMPLEMENTARY OUTPUT STAGES

The class B output stage which we have considered in some detail above can be classified as the common-collector type. If we drive a similar circuit through a transformer whose secondary is connected as shown in Fig. 8, the transistors will be operated effectively common-emitter, with the possible advantage that the input impedance will be independent of the load impedance. This circuit is just as well protected against thermal runaway as the common-collector circuit, since only one of the transistors can be turned on at any time. The circuit will operate without crossover distortion if the transformer is driven from a high impedance. In addition, the transformer must have sufficient inductance that it does not lower the effective impedance of the driving source beyond an acceptable limit.

Another interesting output stage results when the transistors are connected in a common-base configuration as shown in Fig. 9. Although the current gain in the output transistors is only unity, this circuit has the advantage of much higher frequency response than either of the other two types discussed above. Its greatest advantage, however, is that when crossover distortion is eliminated by the use of high-impedance drive, the residual distortion due to variations in beta at both low and high current levels is almost entirely absent. This is so because fairly large changes in beta correspond to only very small changes in alpha (h_{fb}). In Fig. 10 the output voltage for the circuit of Fig. 9 is plotted against the input current. This is a very linear relationship, and comparison with Fig. 4 shows the great reduction in distortion which is brought about by common-base operation. Input and output voltage waveforms for a sine-wave input current applied to the common-base circuit are shown in Fig. 11. The input emitter-base voltage is characterized by steep vertical transitions at the crossover region where the input impedance is high, but no distortion is visible in the output voltage. Because the current gain in the transistors is only unity, the driver stage must be able to provide current equal to the peak output current. The steady current in the driver stage can be reduced by making use of the current gain of the transformer. The highest peak current is then generated at a lower current level (where beta is more constant) in the driver transistors. The thermal protection of the common-base output stage is again the same as for the other complementary circuits discussed above. The advantages of the common-base output stage, higher frequency response and lower distortion, are obtained at the expense of lower power gain and higher standby power consumption (in the driver stage).

NONCOMPLEMENTARY OUTPUT STAGES

All of the circuits discussed above depend for their thermal stability upon the use of complementary symmetry. *n-p-n* germanium power transistors, however, are still few and expensive. Those that are presently available have neither the current ratings, the power capacity, nor the frequency response of readily-available, reasonably-priced *p-n-p* germanium power transistors. It is therefore desirable in certain cases, particularly that of very high power output, to use two transistors of the same type in class B output stages. High-impedance drive can be applied to a "noncomplementary" output stage without jeopardizing the thermal safety by simply using a driver transformer with two secondary windings. A schematic diagram of a common-emitter output stage using two *p-n-p* transistors is shown in Fig. 12. The thermal stability of this circuit is not provided automatically as in the circuits discussed above, but can be made quite good by making the resistances of the secondary windings very low. They can readily be made less than an ohm, which is some orders of magnitude less than the resistance of a temperature-compensated bias network. Again, as with the complementary circuits, whenever one transistor is driven on, the other is driven off by a voltage of the same magnitude. Tight coupling in the transformer is necessary because current flows only half the time in each secondary, and there is the possibility of the generation of undesirable transients in the leakage inductance. It is not difficult in practice, however, to design transformers which have adequately high inductance, low resistance, and tight coupling, since the power level is relatively low and the required turns ratio is not large.

An amplifier using an output stage of the form of Fig. 12 has produced 200 watts in a resistive load with less than 1 per cent total harmonic distortion. At lower power levels, the distortion is considerably less.

The common-base output stage can also be constructed of transistors of the same polarity as shown in Fig. 13. Input impedance, gain, and frequency response considerations are the same as for the complementary common-base output stage. Protection against thermal runaway is again achieved by making the resistances of the secondary windings very low.

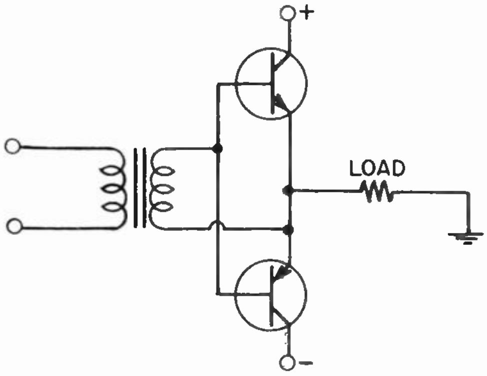

Fig. 8—A complementary common-emitter class B power amplifier output stage.

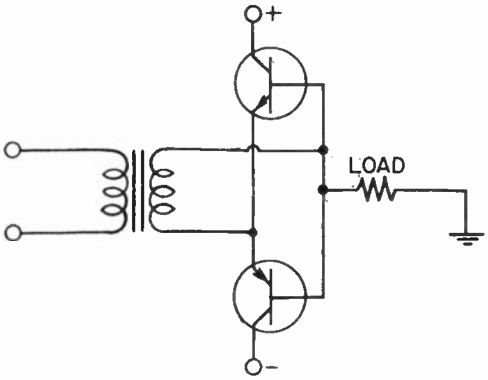

Fig. 9—A complementary common-base class B power amplifier output stage.

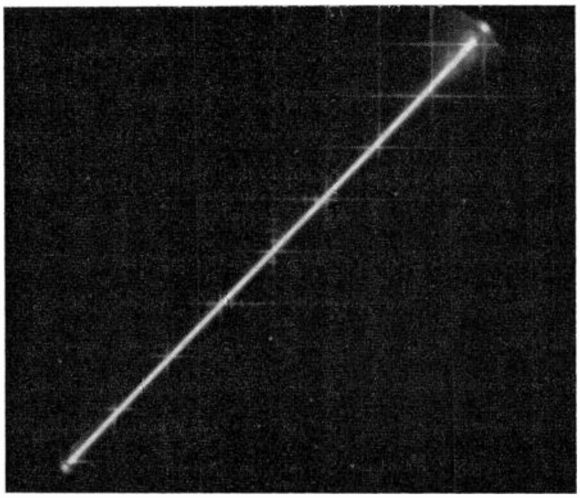

Fig. 10—Output voltage (vertical) vs input (base) current (horizontal) for output stage of Fig. 9. Q1, 2N1218; Q2, 2N176; load, 100 ohms. Vertical scale, 0.2 v per division; horizontal scale, 2 ma per division.

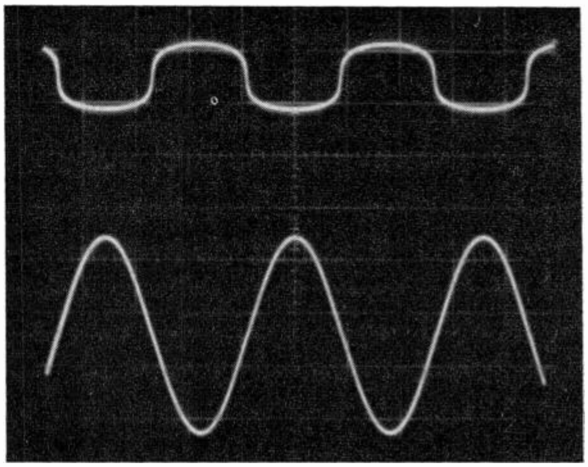

Fig. 11—Input (emitter-to-base) voltage (upper) and output voltage (lower) for sine-wave input current applied to the output stage of Fig. 9. Q1, 2N1218; Q2, 2N176; load, 100 ohms. Upper trace, 0.2 v per division; lower trace, 0.5 v per division.

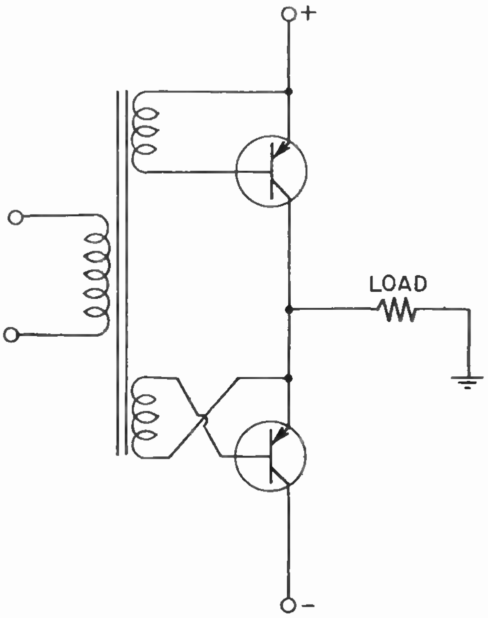

Fig. 12—A noncomplementary common-emitter class B power amplifier output stage.

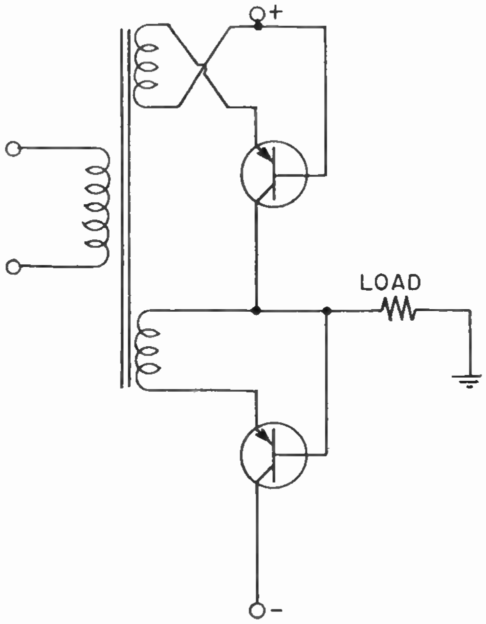

Fig. 13—A noncomplementary common-base class B power amplifier output stage.

CONCLUSIONS

The principle of high-impedance drive for eliminating crossover distortion in class B transistor amplifiers can be applied to circuits having the highest possible degree of protection against thermal runaway. This can be accomplished most easily with complementary output transistors, but examples have also been given of how this can effectively be done with two transistors of the same type.

Several high-impedance-drive amplifiers have been constructed to date, and they exhibit very low distortion without the use of bias networks in the output stage. They have a few disadvantages, one of which is that it is not possible to take advantage of the transconductance linearity at high current levels which can be realized if the transistors are driven from a low impedance. It has been found, however, perfectly possible to reduce the distortion due to beta nonlinearity to a negligible amount by the use of simple feedback arrangements. Circuits employing high-impedance drive do show significant reduction of crossover distortion and possess unequaled thermal stability. For these reasons, circuits of this type appear to be by far the most satisfactory for class B amplifiers.

Electro-Pneumatic Air Modulator for Fog Signals*

J. K. HILLIARD†, FELLOW, IRE, AND W. T. FIALA†

Summary—**This paper describes a highly-directional electropneumatic loudspeaker system capable of radiating any type of warning signal in the 100–1000 cps range as well as speech. The mechanism of the electropneumatic device is described in detail. Field measurement data on the directional characteristics, maximum range, and the effect of wind, which we gathered on tests performed at Point Montara, Calif., are presented. Aspects of signal duration, threshold, and new requirements for fog signal resulting from new trends in coastal shipping patterns, as for example, the increase in private craft, are discussed.**

INTRODUCTION

RECENT TRENDS in coastal shipping patterns, plus changing conditions in the areas directly adjacent to lighthouses or other navigation-aid installations, have created a need for new types of audible sound generators.

For many years the principal source of fog signals has been the familiar air horn, pitched at a low (100-200 cps) frequency in order to obtain a maximum hearing range. Such a sound generator has been difficult to make directional, since any reasonably-sized horn would have a small mouth diameter compared with the wavelength of the sound transmitted.

In the days when most lighthouses were in unpopulated areas, the nondirectional chracter of the air horn presented no particular problem. But today the increased mobility of the population, plus the pressure for attractive building sites in coastal regions, has created entire communities in the immediate vicinity of many fog signal installations. Under such conditions, a nondirectional fog signal can become a serious public nuisance.

At the same time that the need for a highly-directional signal has increased, the total power and range required of such signals has tended to decrease. In earlier days, nearly all commercial ships traveled within 1-to-3 miles of the coast. The radius of turn of such vessels required a minimum 6-to-10 miles warning range if safe navigation were to be achieved. Today, however, with the advent of radar and sonar, most major ships follow a course that keeps them a safe 4-to-10 miles from land. Only small and maneuverable craft, private and commercial fishing boats, stay close to shore. To service these craft, a fog signal with a 3-to-5 mile range is more than satisfactory in many instances. Because of the inverse square law, cutting the range in half lowers the power requirements by 75 per cent.

A third important new trend is the increasing number of private craft in coastal waters manned by amateur or only partially trained crews. Such individuals may not know, or may choose to ignore, storm warnings and similar safe-navigation instructions or signals. At harbor entrances and similar locations, therefore, it would be advantageous to have an audible signal that could be voice modulated to produce intelligible speech.

The purpose of this paper is to describe a highly-

---

* Received April 27, 1962; revised manuscript received, May 22, 1962.

† LTV Research Center, Western Division, Anaheim, Calif.

directional electropneumatic, air-modulated loudspeaker capable of radiating any type of warning signal in the 100–1000 cps range, as well as speech. Results are also given for a series of tests conducted to delineate the directional qualities of the sound generator, both in absolute terms and in a practical navigation situation. In these tests, 200 and 400 cps warbled tones, plus a voice signal, were compared with the standard diaphone fog signal presently installed at the U. S. Coast Guard Lighthouse station at Point Montara in the 12th U. S. Coast Guard District.

An interesting adjunct of the test was the establishment of a shadow zone in the up-wind direction, fully substantiating the effect of wind and vertical temperature gradients on the transmission of sound over water as described by Wiener.[1]

TECHNICAL DESCRIPTION OF THE ELECTRO-PNEUMATIC FOG SIGNAL GENERATOR-LOUDSPEAKER

The electropneumatic equipment used for the tests included, in the case of the 200 and 400 cps warble tones, a single unit consisting of four air-modulated loudspeakers driving an exponential horn. Fig. 1 is a photograph of the type of horn used in this test. The total length of the horn is 15′, and the mouth area is large enough to be capable of radiating audio frequencies down to approximately 60 cps. The sound pressure level at the throat is 173 db, which corresponds to about 75 acoustic watts per square inch. The walls were made sufficiently stiff to handle this power by constructing the horn of aluminum with adequate wall reinforcing.

In the electropneumatic transducer, the flow of compressed air through a orifice is modulated at audio frequencies by the valve action of a diaphragm attached to an electric coil. The coil assembly is almost identical with the voice coil in a loudspeaker of the type commonly used in theaters.

Each of the air-modulated speakers is capable of developing in excess of 2000 acoustic watts, with a 40-psi air pressure input. Fig. 2 is a cross-sectional view of this unit, showing the inner and outer modular rings that form the internal air valve. The inner ring contains two rows of eight slots, equally spaced around its circumference. Each of these slots has a height of 0.060 inch. The outer modulator ring also contains eight slots of the same width, spacing, and height. The inner ring is fixed in a stationary position, while the outer ring "floats" on eight quarter-inch butyl rubber blocks bonded onto the inside circumference of a fixed supporting ring.

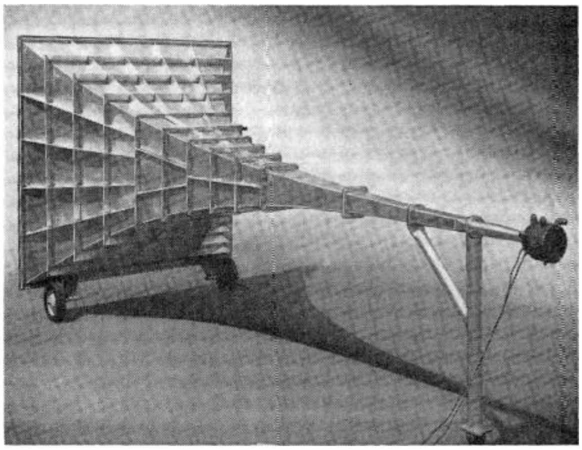
Fig. 1—Electro-pneumatic loudspeaker system with exponential horn.

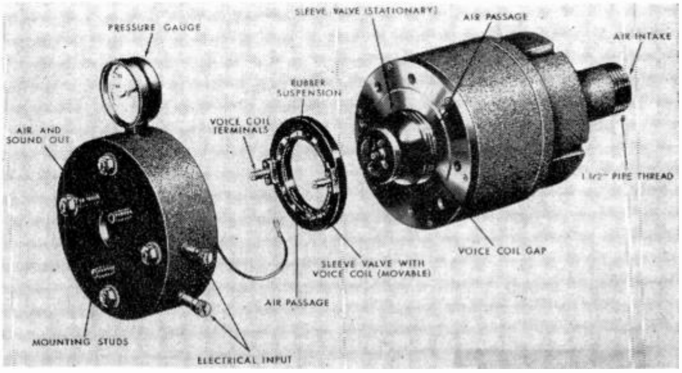

Fig. 2—Cross-sectional view of electro-pneumatic transducer.

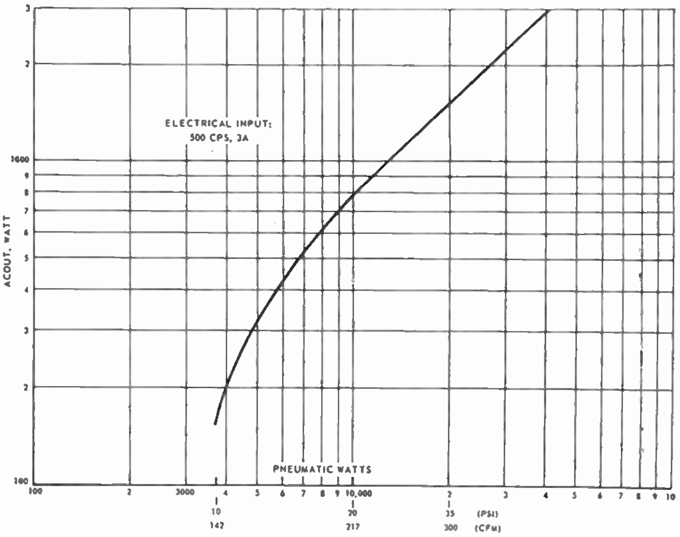

Fig. 3—Acoustic output as function of pneumatic input.

Electrical impulses directed to the loudspeaker drive the outer modulator ring in an axial direction, increasing and decreasing the alignment of slots in the inner and outer rings. In the quiescent state, with no modulation occurring, the slots of the inner ring are half closed, presenting an effective slot height of 0.030 inch to the stream of air flowing radially inward. Electrical signals change the area of air passage, modulating the flow in accordance with the signals received. As presently constructed, one hundred watts of audio power are required for 100 per cent modulation. Fig. 3

---

[1] F. M. Wiener, "On the propagation of audible sound over water in fog," *Sixth Internat'l Tech. Conf. on Lighthouses and Other Aids to Navigation*, Washington, D. C. no. 6-1-2; September, 1960.

shows how the acoustic output varies with the pneumatic input.

POLAR SPL TEST

Before transporting the equipment to Point Montara, the Ling-Altec loudspeakers and horn were checked for directional quality in polar tests conducted over flat terrain at the Orange County Airport. Warble signals were used, modulating the tone ±100 cps at a 2-cps rate. A sound level meter was positioned 60 feet from the air valve. Observations were made at 10°. Two sets of readings were taken, one with a 200-cps signal, a second with a 400-cps tone.

Results of these tests are shown in Fig. 4. As might be expected, the 400-cycle signal was more directional than the 200-cycle signal, since the horn dimension more closely approximated the wavelength of the emitted sound. But both signals displayed an effective concentration of sound directly in front of the horn. In the case of the 200-cps signal, a difference of approximately 20 db was measured between the 0° and 180° points. Increasing the frequency to 400 cps increased this directional difference to 25 db.

Similar polar tests of the diaphone installation at Point Montara would have been valuable, but houses and other structures prevented such measurements. The voice loudspeaker used in the subsequent tests had a distribution angle of 90°. The directional qualities of the electro-pneumatic signal were clearly evidenced in the results of the later tests off the Point Montara coast, including the effect of increasing the frequency from 200 to 400 cps.

AUDIBILITY THRESHOLD RANGE TESTS

At Point Montara, a repetitive sequence of sounds was established in order to eliminate any variance in the test conditions. The order and timing of this sequence was as follows:

1) Standard diaphone—4 sec
2) 200-cycle air-modulated tone—4 sec
3) 400-cycle air-modulated tone—4 sec
4) Voice signal announcements—10 sec.

The "audibility threshold" was defined as the point at which all five observers aboard the vessel approaching Point Montara from seaward could clearly hear the signal indicated. Five cardinal runs were made at 000°, 030°N, 060°N, 030°S, 060°S. The run originated 10 nautical miles from the noise sources.

The exponential horn used to transduce the 200- and 400-cps signals was located directly below the Point Montara diaphones mounted on a building wall and supported by an external scaffold. The voice signal generator was independently mounted and located directly south of the diaphones.

Observations were made of the exact point at which the first observer claimed to hear each signal source, and again when all five observers were able to detect the signal. The latter points were used to develop the range limits indicated in Fig. 5.

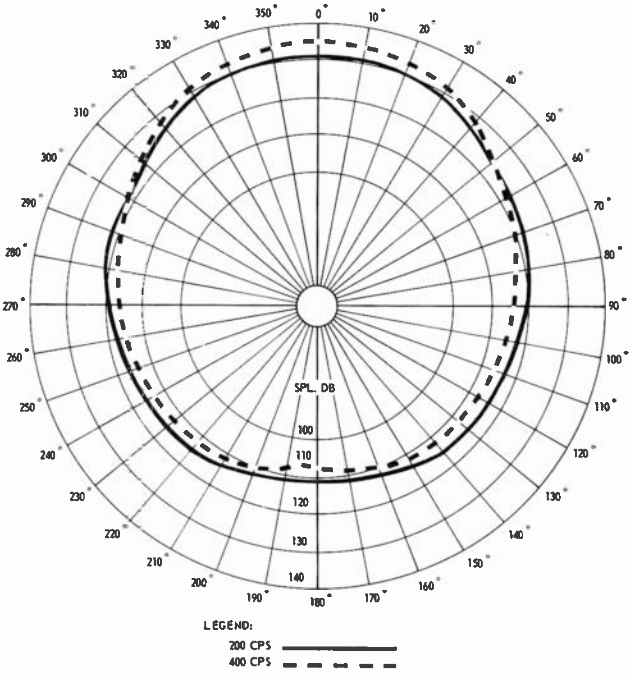

Fig. 4—Polar pattern of exponential horn.

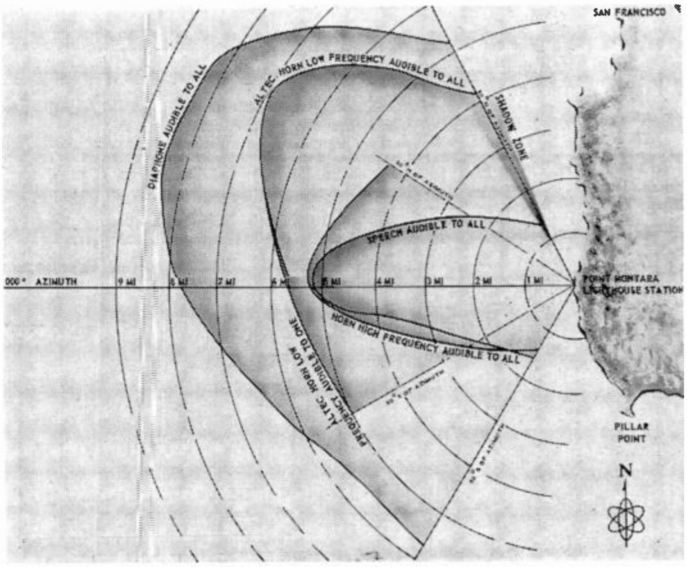

Fig. 5—Maximum range pattern.

ANALYSIS OF 400-CPS SIGNAL RESULTS

The lower range of the 400-cps signal as compared to both the 200-cps signal and the diaphone, can be explained on several counts.

It is well known that signal attenuation over turbulent water is greater for higher frequency components than lower frequency. Also, higher frequency signals require a greater difference limen, if the tone is to be readily picked out from background noise.

However, the principal reason for the sharply reduced range is that the steam-powered Coast Guard cutter *Willow*, while crusing at the speed indicated for the tests, produced a background noise heavy in the 300-to-600 cycle band, effectively masking the 400-cps signal to a far greater extent than the lower 200-cps signal.

The highly-directional quality of the 400-cps signal, however, indicates that it would be the preferred sound source in any condition where directivity was more important than range. Note also that the speech signal had a range almost equal to that of the 400-cps tone, indicating that loudspeakers of this type should be completely practical for harbor applications and other instances where the sea-going traffic is restricted within a known area.

WIND SHADOWS

Over the open ocean the speed of sound varies with the height as a result of the vertical temperature and wind gradients. As a result, sound waves are bent upward or downward. Under these conditions it is possible to have shadow zones into which no direct sound can penetrate. A shadow zone is most commonly encountered upwind from a source, where the wind gradient bends the sound waves upward. Downwind, the wind gradient bends the sound waves downward.

In the test at Point Montara, the prevailing wind was from a northwesterly direction, and therefore it was to be anticipated that shadow zones would exist. Previous information indicated that these shadow zones should exist at ranges less than 1 mile; however, it was found that along the 60° heading north of azimuth, no signals were observed at 3.8 miles, at 3.15 miles, and at 1.1 miles, with the three different types of tone signals. However, at the 1.1-mile position, speech was audible.

This data confirms other measurements to indicate that in the shadow zone there is considerable frequency selective attenuation and in some cases the higher frequencies have less attenuation than the lower frequencies.

The observation of this wind shadow substantiated the theory governing phenomena such as this, and provided excellent proof of the many and often intangible variables that can be expected in empirical tests of this type.

SIGNAL DURATION THRESHOLD

The ability of the electro-pneumatic transducer to convert a large amount of pneumatic energy into an acoustic signal with a very high power level of a very short duration offers another advantage which is not generally appreciated.

In psycho-acoustics there is a relationship between signal levels and signal duration which parallels the relationship between the threshold flash intensity and flash duration of lights often referred to in optics as the Blondel-Rey effect. The threshold sound pressure level for a pure tone acoustic signal masked by broadband noise is independent of signal duration for signals longer than 0.5 sec. For signals shorter than 0.5 sec the threshold sound pressure level increases about 3 db for each halving on the signal duration. This reciprocal relation between threshold sound pressure level and duration holds for signal durations down to a few milliseconds. For shorter signal durations the threshold sound pressure level increases by as much as 5 to 6 db per halving of signal duration. This means that a constant amount of acoustic energy is consumed to elicit a threshold response of hearing for pure tone signals having durations between a few milliseconds and 0.5 sec. For signal durations greater than 0.5 sec, the amount of acoustic energy consumed to elicit a threshold response doubles for each doubling of signal duration.

The efficient generation of short blasts is practical with this electro-pneumatic type of signal. At least under laboratory conditions with a constant level of masking noise, it is possible to decrease the duration of fog signal blasts from the commonly used 4 sec to 0.5 sec without requiring a change in sound pressure level. This would result in an eightfold reduction in the energy required per blast for a given range of audibility. If the number of fog signal blasts per unit time is unchanged, this would result in an eightfold reduction in the primary power requirements for a given fog signal installation. Conversely, the power level of the primary source could be maintained and the sound power of the 0.5-sec blast could be increased eightfold with a resultant increase in sound pressure of 9 db. This would just about double the range of audibility of an intermediate range (2 to 4 mile) fog signal.

CONCLUSION

It may be that the capability to transmit voice signals over great ranges might provide a very useful auxiliary service for fog signal stations; for example: to transmit weather bulletins or advisories to the many small boat operators who may not recognize displayed storm warnings or who may imprudently neglect to act on such warnings. In any case it appears that the electrically modulated air stream transducer offers promise as an intermediate long-range fog signal for general Coast Guard use.

In addition, these tests demonstrate the feasibility of using such equipment for a number of applications where high-powered speech communication and warning systems are needed to provide a range of 2 miles in any direction.

In disaster warning systems many forms of communication are in use; however, at the present time the pedestrian has been left without contact since he has no receiving equipment except his ears, and he is also the most vulnerable in terms of protection.

Stereophonic Frequency Test Record for Automatic Pickup Testing*

A. SCHWARTZ†, ASSOCIATE, IRE, G. W. SIOLES†, MEMBER, IRE, AND B. B. BAUER†, FELLOW, IRE

Summary—The recently issued CBS STR-100 stereophonic test record enables the user to make a rapid and accurate assessment of phonograph pickup characteristics.

An important feature of the record is the synchronized sweep frequency bands which are used in conjunction with a level recorder to obtain an automatic plot frequency response and crosstalk in a fraction of the time previously required. A synchronizing circuit for the level recorder is described. Spot frequency band with voice announcements also are provided. Other test bands permit measurement of pickup sensitivity, stylus-tone arm resonance compliance, and wavelength loss based on Miller's equations.

A significant proportion of the effort was devoted to calibration of recorded amplitudes. Microscopic, light pattern and variable speed turntable methods were used, and the resultant calibration curves are shown.

INTRODUCTION

THE RECENT ISSUE of the CBS STR-100 stereophonic test record is a matter of importance for those engaged in the measurement of phonograph pickup characteristics. The salient feature of this record is the frequency sweep bands which will yield continuous response data that can be automatically plotted by a level recorder.

The first portion of this paper will describe the test bands and their application to measurement of pickup characteristics. The second half of the paper will describe the design, calibration and mastering procedures.

APPLICATION

Pickup Response

The accuracy and ease of measurement of pickup frequency response characteristics has been greatly improved with the introduction of the synchronized frequency sweep bands. Complete response data for left and right channels can now be obtained in the frequency range from 40–20,000 cps where heretofore only spot frequency measurements were available. Accuracy is improved by eliminating the judgement required in reading meters especially when fluctuations are present at high frequencies. In addition measurements can be made in a fraction of the time previously required.

The sweep is logarithmic at a rate of 1 decade each 24 seconds and corresponds to the chart speed of the General Radio Graphic Level recorder. The response is obtained by having the level recorder plot the pickup output to the recorded frequency sweep. A 1000-cps reference tone precedes the sweep and can be used to automatically start the recorder. Fig. 1 (next page) is the schematic of such a synchronizing circuit. All relays are initially de-energized as shown in the schematic diagram. Left and right channel inputs are combined in the cathode of V1 insuring that the keying tone will be present for either direct or crosstalk measurements. The cathode follower output is fed to the V2 high gain amplifier through a high-Q LC 1000-cycle filter allowing only 1000 cps to feed through. Following this stage is a cathode follower V3 employed as a power amplifier to drive a sensitive relay K1, after the signal is rectified by the two 1N2482 diodes. A Zener diode and clipping-range control prevent high signal levels from overheating the sensitive relay.

With K1 energized, relay K2 is energized and locks itself across the power supply through contact 1. At the cessation of the keying tone, K1 is de-energized—thereby actuating K3, which starts the recorder motor at the instant the sweep beings. At the termination of the sweep band, the reset switch is manually set at RESET momentarily to de-energize K2, and the circuit is then ready for the next sweep.

In addition to the sweep, a set of spot frequency bands from 20 to 20,000 cps, with voice announcements, have been recorded for manual response plotting and for playback of single tones when required. Discrete frequency bands facilitate the absolute calibration of recorded amplitudes, a procedure which will be described below.

Sensitivity

Pickup sensitivity is measured with the left and right channel 1000-cps calibration bands. The recorded level is 3.54 cm/sec rms, which is an equivalent lateral velocity of 5.0 cm/sec rms and is accurate to within ±0.25 db.

Stylus-Tone Arm Resonance

Stylus-tone arm resonance is measured with the high-level low-frequency sweep bands which extend from 250 to 10 cps. These sweeps can be plotted by the level recorder and are also adaptable to automatic starting.

Compliance

Compliance can be determined with calibrated 100-cps lateral and vertical modulation. If tracking force

---

* Received April 27, 1962; revised manuscript received June 11, 1962.

† CBS Laboratories, Stamford, Conn.

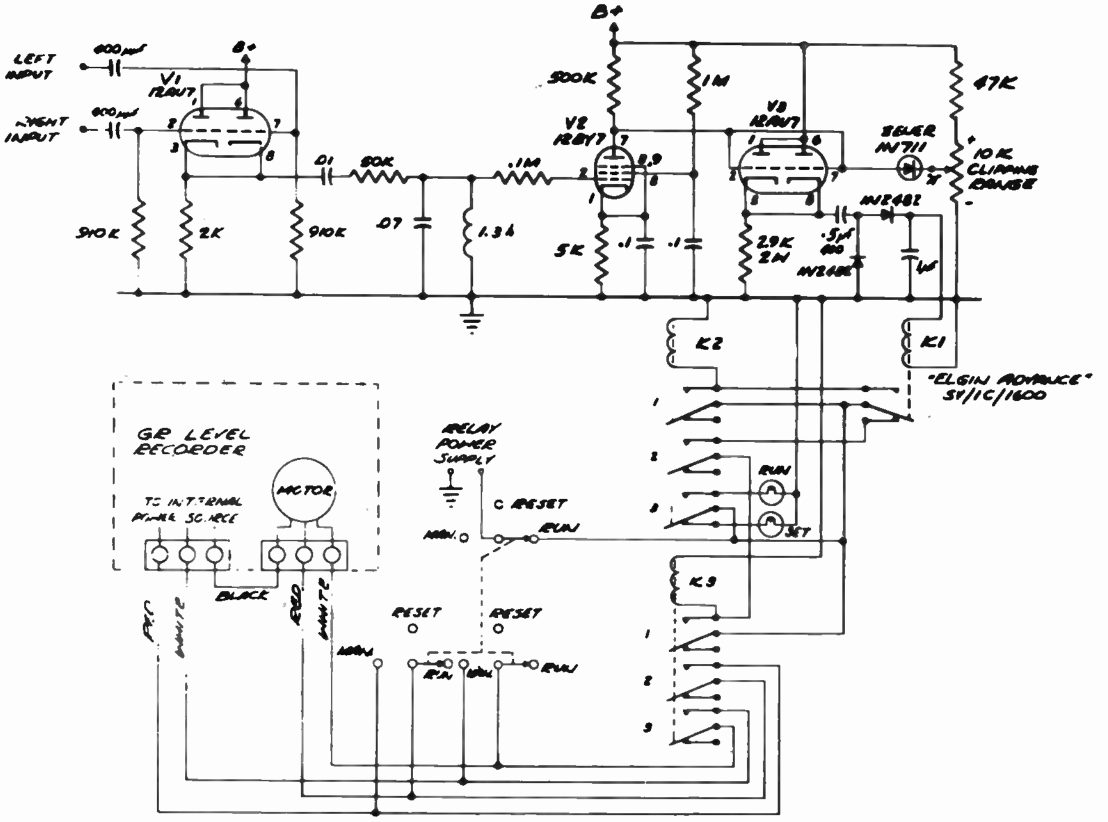

Fig. 1—Schematic diagram of synchronizing circuit.

and the peak groove displacement are known, the compliance can be calculated. This data may differ somewhat from that obtained by use of compliance meters, and is due in part to the differential force between the inner and outer groove walls arising from pickup and tone arm geometry.

Wavelength Loss

Fig. 2 is the equation derived by Miller[1] depicting the pickup response for lateral recording. It has been verified experimentally at CBS Laboratories and found to be applicable to single channel recording. The second factor in the equation is a function of playback frequency, pickup characteristics, and the modulus of elasticity of the disk. The first factor in the equation, a quantity that varies from 1 to 0, can be termed the wavelength loss and is a function of recorded wavelength, pickup characteristics, and modulus of elasticity of the disk. For convenience in the expression shown here, recorded frequency and medium velocity, *i.e.*, diameter and recording rotational velocity, have been substituted for wavelength.

$$\text{Response} = \left[1 - \left(\frac{f}{f_c}\right)^2\right]\left[\frac{1}{\left(1 - \frac{f}{f_0}\right)^2 + \epsilon^2\left(\frac{f}{f_0}\right)^2}\right]^{1/2} \quad (1)$$

$$f_c = 6.65 \times 10^{-2} DN \left[\frac{E}{RF}\right]^{1/3} \quad (2)$$

$$f_0 = \frac{1.94}{\sqrt{m}}\left[FRE^2\right]^{1/6} \quad (3)$$

f = frequency in cps
f_c = cutoff frequency in cps
f_0 = stylus-groove resonance in cps
D = recorded diameter in inches
N = recording revolutions per minute
E = modulus of elasticity of disk material in dynes/cm^2 (3.3×10^{10} for vinyl)
R = playback stylus tip radius in centimeters
F = tracking force in dynes
$\epsilon = r_M / 2\pi f_0 m$
m = mass at playback stylus tip in grams
r_M = resistance at playback stylus tip in mechanical ohms

Fig. 2—Pickup response as a function of record and pickup constants.

The wavelength loss is measured by means of identical frequency bands from 1000–20,000 cps and recorded at maximum and minimum diameters. The inner group has been compensated for the wavelength losses expected from a pickup having a 0.7×10^{-3} inch tip radius tracking at $2\text{–}4 \times 10^{+3}$ dynes. Playback under these conditions should produce response within 2 db between the outer and inner diameter at a given frequency. Increasing tracking force or tip radius should cause a corresponding loss in high frequency response at the inner diameter.

---

[1] F. G. Miller, "Stylus Groove Relations in Phonograph Records," Acoustics Res. Labs., Harvard University, Cambridge, Mass., Off. of Naval Res. TM 20; March, 1950.

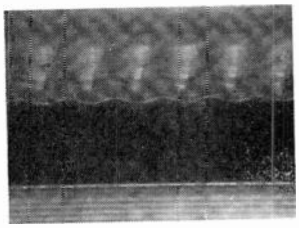

Fig. 3—Photomicrograph (one wall) of a 10,000-cps wave.

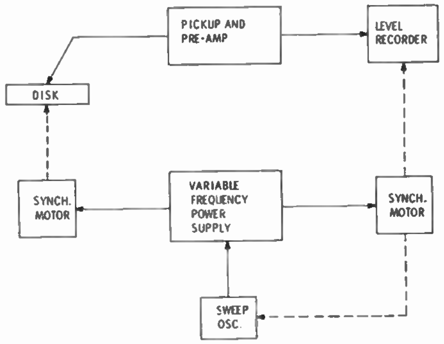

Fig. 4—Sweep frequency calibration apparatus, block diagram.

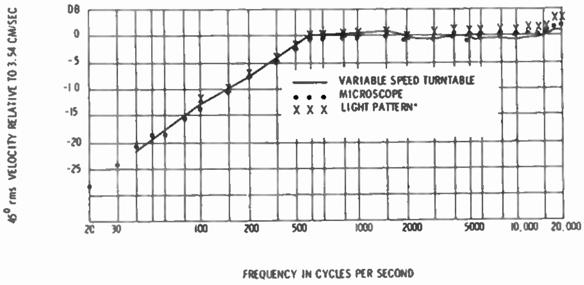

Fig. 5—STR-100 calibration, left channel; right channel is missing.

Mastering and Calibration

Recording Characteristics

Selection of the recording characteristic was based on obtaining the maximum recorded level while staying within the limits imposed by the disk recording medium. Peak displacement is limited, in stereophonic recording, by the groove depth and groove pitch. At high frequencies the power handling capacity of the cutter, the Westrex 3C in this case, must not be exceeded. A peak displacement of about 0.63×10^{-3} inch and a peak velocity of 5 cm/sec were selected to accommodate these limitations. The characteristic is, therefore, constant amplitude below 500 cps and constant velocity above 500 cps. The transition is abrupt, so that variations in pickup response can be readily determined by the deviation from two straight lines. This "ideal" straight line characteristic was obtained by switching from a constant amplitude to a constant velocity characteristic at 500 cps during the recording of the glide tone.

Calibration

Absolute and relative calibration of the recording system proved to be the most time consuming part of the preparation. The three established methods of measuring recorded amplitudes are microscopic observation, light pattern and variable speed turntable. The first two methods, which do not require playback of the recording, are fundamental methods and are to be preferred wherever possible.

Measurement of the discrete frequency bands up to 10,000 cps was performed primarily by the microscope method. In this frequency range recorded amplitudes vary from 0.6×10^{-3} inch to 0.03×10^{-3} inch. Above 10,000 cps amplitudes were too small to measure by observation so that photomicrographic techniques were used. Fig. 3 shows a photomicrograph of 10,000-cps wave, typical of those used in the calibration procedure. The amplitude can be measured directly from the projected image of the photomicrograph. Substantially the same recorded amplitudes were measured by the light pattern method.

Measurement of the frequency sweep bands presents a difficult problem since neither the microscope or light pattern method is applicable for continuous plotting. A modification of the variable speed turntable method was developed which was able to provide continuous calibration of the sweep bands. A block diagram of the measurement apparatus is shown in Fig. 4. The synchronous turntable motor is excited by a variable frequency power supply which in turn is fed by the sweep frequency oscillator that has been previously used to record the glide tone. The oscillator tuning is mechanically driven by the level recorder, and synchronous drive motor of the latter is driven by the variable frequency power supply. Playback of the sweep under these conditions will present a constant frequency to the pickup over a 20:1 frequency ratio. The characteristics of the pickup are thereby eliminated so that plotted response is that of the recording system alone.

Fig. 5 is a comparison of the recording system calibration by microscope, light pattern, and variable speed turntable methods. The three measurements show good agreement. Response characteristics of the cutter head is irregular above 10 kc so that the recording was made at 16⅔ rpm at half the playback frequency. The response data shown is on a playback frequency basis.

Right-channel and left-channel response characteristics are equal within ½ db of each other.

Crosstalk measurement for either the spot frequency or sweep bands cannot be made by either microscope or light pattern because of the small amplitudes involved. Based on playback measurements, crosstalk is better than −20 db from 100 to 10,000 cps.

Cutting Stylus

High-frequency response of the recording system varies inversely with the size of the cutting stylus burnishing facet or "dub." To insure accuracy, the recording system must be calibrated each time a cutting stylus is installed. A damage to the stylus during the recording requires recalibration and scrapping of the completed portions. For these reasons the cutting stylus was carefully selected so that the dub size was sufficiently small for adequate high-frequency response without being unduly fragile.

Critical stylus selection was made possible by the development of a special microscope fixture. The stylus is positioned by the fixture so that it can be viewed and measured from any angle under 1300× magnification, without being defocussed. Measurements of the dub size and tip radius are accurate to within 0.5 micron or 20×10^{-6} inch.

Mastering

Despite the increase in complexity involved, the frequency recordings were made directly from an oscillator to avoid introducing tape recorder distortion and modulation noise. Voice announcements were taped. Precise timing, which was required to synchronize the glide tones and tape recorded announcements, was achieved by use of an elaborate step-by-step procedure. Because direct recording introduces the possibility of human errors, as many as 12 lacquers of each side were cut. From this group the best two copies of each side were selected to be processed. At the processing end, careful quality control is being maintained at all stages to insure against possible deterioration in the quality of the recording.

CONCLUSION

The STR-100 Test Record has been an outgrowth of more than two years of intensive disk recording research. Advances have been made in calibration methods and the development of the associated calibration apparatus. Studies have been made of the cutting process and the dependence of recording response on stylus geometry. Miller's pickup response function has been investigated and experimental verification obtained. As a result, the record is an accurate and reliable instrument with which to measure stereophonic pickup characteristics. In addition, its adaptability to automatic testing can effect significant economics for pickup manufacturers and users.

ACKNOWLEDGMENT

The authors wish to express their thanks to A. Gust for his valuable assistance and technical contribution during the development of the record and the work preceding it. The kind assistance of Gunter and Anderson of Shure Bros., Inc., is acknowledged in providing the light pattern calibration for the STR-100.

Drop-Outs in Instrumentation Magnetic-Tape Recording Systems*

ROBERT H. CARSON†

Summary—**A method of measuring drop-outs from magnetic-tape recording systems has been designed and built so that quantitative data can be quickly obtained from any tape on any machine and under any condition. Conclusions are made as to the relative effects of tape, machines, reels, recording processes, reproducing processes, environmental dirt, tensions, etc., on the drop-out count. It has been found that drop-out measurements can be used to evaluate tape and machines in regards to wear characteristics, to evaluate tape-cleaning methods, and to determine techniques in handling tape and operating tape machines to minimize drop-out effects both for analog and digital applications.**

INTRODUCTION

Background

THE PHENOMENA that occurs in an output signal of a tape recorder, now generally known as "drop-outs," have long been known by those who have worked closely with magnetic recording systems. However, up to about 1950, drop-outs, as known today, were very numerous and were usually masked by an over-all variation in the output level that was continuously changing. The envelope from such a tape is shown in Fig. 1(a). A constant level sine-wave signal

---

* Received April 30, 1962.

† U. S. Naval Research Laboratory, Washington, D. C.

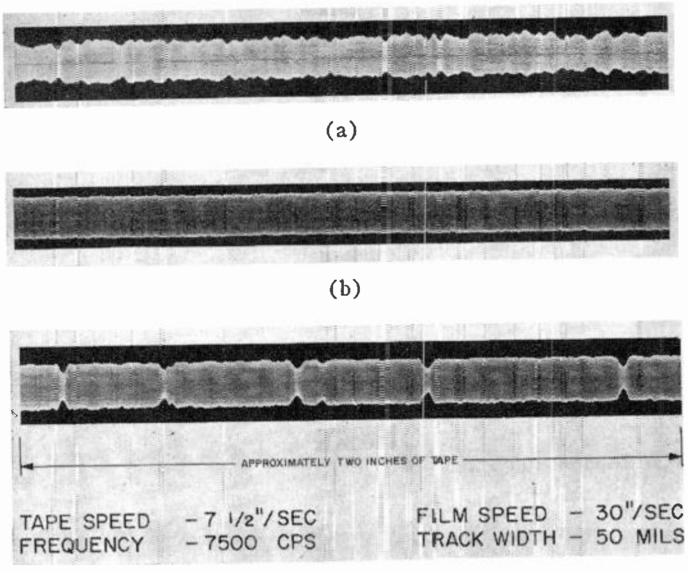

(a)

(b)

(c)

Fig. 1—Types of modulation envelopes of tape—past and present.

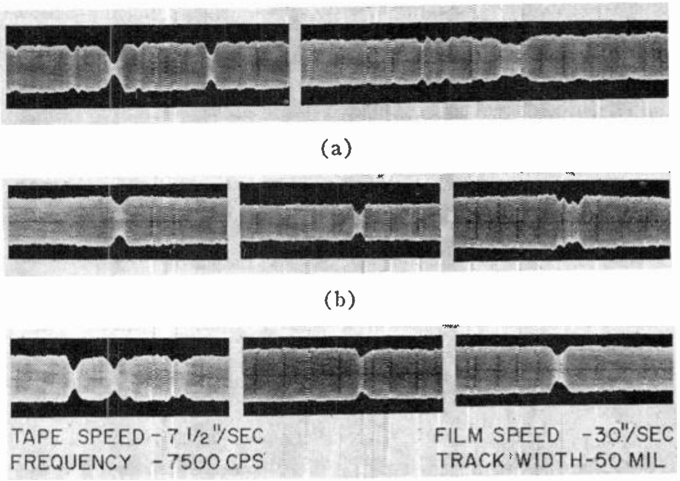

(a)

(b)

(c)

Fig. 2—Types of drop-outs.

was recorded with a recorded wavelength of 1 mil.

Due to steady improvement in both tapes and machines, the output of present-day systems may be as shown in Fig. 1(b). Unfortunately, however, this is an exception rather than the rule. The usual envelope is the one shown in Fig. 1(c), though this represents the output of a system somewhat worse than the average.

These discrete drops in signal are known as drop-outs. With an envelope as in Fig. 1(a) the modulation noise figure was a good indication of the envelope character; but, with discrete drops in signal, this figure has less meaning. Various shapes of drop-outs are shown in Fig. 2. These were selected from a large number of tapes.

Definition

The definition of the term drop-out has not been standardized so its meaning can be somewhat different as used by various groups who use magnetic recording systems.

In this study, a drop-out has been considered any reduction of signal level, as reproduced from a magnetic recording system, of a specified amount (either in db or per cent) and lasting no longer than 100 msec at a tape speed of $7\frac{1}{2}$ ips ($12\frac{1}{2}$ msec at 60 ips) provided a constant level signal was recorded. The time indicated represents 75 mils in actual length of tape.

This definition resulted from study and experience with many magnetic tapes. In making a thorough search with many tapes and machines, it was found that the average length of drop-out with a signal reduction of 3 db (about 30 per cent) was about 15 mils, with only very few extending beyond 75 mils. Many observers, nevertheless, have noted that signal reductions corresponding to much longer lengths of tape, even up to several inches, may be found. It is true that such reductions can be found under certain special conditions, but they do not result from the same causes as the shorter drop-outs.

Drop-outs that fit the definition result almost entirely from loss of contact due to nodules or holes in the tape surface, or from foreign particles either embedded in the tape or on the surface or a combination of both. Longer drops in signal level are caused by skew (azimuth misalignment) or loss of contact over longer lengths of tape due to physical deformities of the tape that may result from improper tensions applied by machine and reels, and from severe temperature and humidity changes.

Though these longer drops in output can be quite important, they were not included in this study since it was considered necessary to first determine the basic nonuniformity characteristics of tapes and machines under normal laboratory conditions. This study was initiated because of the many contradictory opinions generally prevalent concerning which tapes have the most or least drop-out effect, which machines cause more or less drop-outs, and to what extent various environmental conditions affect the signal loss from drop-outs.

Measuring Technique

The design, construction, and calibration of the measuring system was a major problem and the final design resulted from considerable trial and error experimental experience. These design problems will not be detailed, but to aid in the interpretation of the data, some understanding of the basic measuring technique is necessary.

Many systems using demodulation techniques have been used to show the nonuniformity of output, and for modulation envelopes that were continuously changing, such systems can give a general figure of merit. With only discrete drops in output, a more precise system must be utilized. Since the objective was to make a basic study of factors affecting drop-out formation and not just total loss of information, a digital system was constructed that would count the number of times that the signal drops below a selected threshold level, and, in addition, would also measure the length of time that the signal stays below the threshold.

Fig. 3 is a block diagram of the basic system for one threshold level. The system shown is the latest revision of the measuring system. It is completely solid state, completely digital, and will operate at frequencies up to 100 kc. The system used previously was all vacuum tube plug-in units, was limited to frequencies up to 15 kc, and used one shot controlled gates that measured the time that the signal stayed below the threshold level. In the present system, the timing system is based on a free running multivibrator, synchronized to the signal frequency, whose output is fed into a binary counter which can be tapped off at any count to control a gate through which the counting pulse must pass. This system inspects every cycle or pulse of the reproduced signal and, if the signal is above the threshold, the one shot will fire. The leading edge of the one shot pulse is the counting pulse and will go through any gates that are open. The trailing edge of the one shot pulse is used to reset all flip-flops so that the gates are closed, if not already closed.

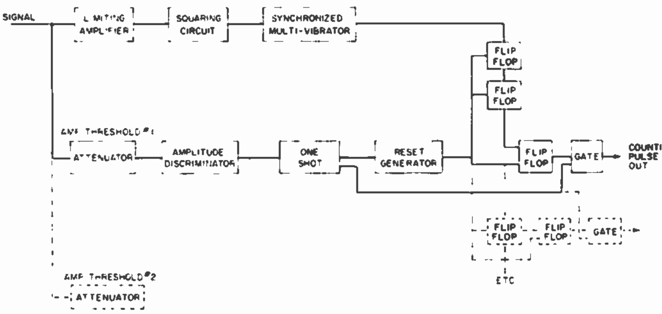

Fig. 3—Block diagram of basic drop-out measuring system.

All pulses going through the gates are counted in decimal counters and, after the run is completed, the various numbers are either recorded on a data sheet or punched out on tape for entry into a computer.

In addition, a 20-channel event recorder is available so that the counting pulses can also be made to operate the marking pen. This gives a graphic presentation of the location of drop-outs along the tape.

A timing system is used that allows a tape to be rerun and started at exactly the same place. Therefore, a complete history of any particular drop-out can be followed through any number of runs.

RESULTS

General Survey

In starting to investigate any complex phenomena, the experimenter is confronted with decisions as to what factors to investigate first. In this study, it was thought advisable to first make a general survey of the types of tapes available to determine the general distribution of drop-outs, in amplitude and in length.

Amplitude Distribution: Fig. 4 is a plot of the number of drop-outs per 1000 ft of tape vs per cent signal reduction, regardless of length. While these curves are from 1959 tape, data from recent tapes show the same general curve shape, but may vary in actual numbers. The curve D-4 shows why it is often difficult to obtain consistent measurements from a tape, even when run through the same machine on successive passes. As shown, if the output level changes from one run to the next by as little as 5 per cent in the 3-db threshold region, the actual count of drop-outs could vary about 250 out of a total of 800. A 5 per cent change in output level can easily occur due to normal tension variations in the best instrumentation recorders.

In order to obtain more consistent data, it was decided that on most tests an AVC circuit would be used to drive the drop-out measuring equipment. A time constant was selected that would allow all drop-outs to pass but would eliminate changes of the average output level due to machine tension, tape skew and other long term effects.

Length Distribution: This general study also showed that the distribution of drop-outs by length was very similar for all standard tapes. This is shown in Fig. 5. The tape that is somewhat different is one that has a thin plastic coating over the oxide.

Data Requirements

Using this general survey as a basis, a system was selected that would give the most useable information with the least possible data numbers, and also considering the practical limitation of the number of thresholds and gate lengths that could be used simultaneously. During a period of two years, over 185 reels of instrumentation tape representing 38 types from four manufacturers have been tested using 3 amplitude thresholds, 3, 6, and 12 db, and 4 time gates for each threshold, 3–8, 9–15, 16–35, and over 36 cycles. As a result of considerable effort spent in determining the most efficient data-processing technique and data presentation, it now seems possible to obtain all useable information with only 9 data numbers per run. These include the total count for 5 amplitude thresholds, 2, 3, 6, 12, and 18 db, with the 4 time gates for the 3-db threshold only. It is believed that this amount of data from each run will make possible a thorough evaluation of tapes and machines in respect to any specified application. There is a strong possibility that with added experience and knowledge even less data may be required for such evaluations. Undoubtedly the ultimate objective would be to arrive at an index figure of merit for certain major types of applications such as an analog index, digital index, etc.

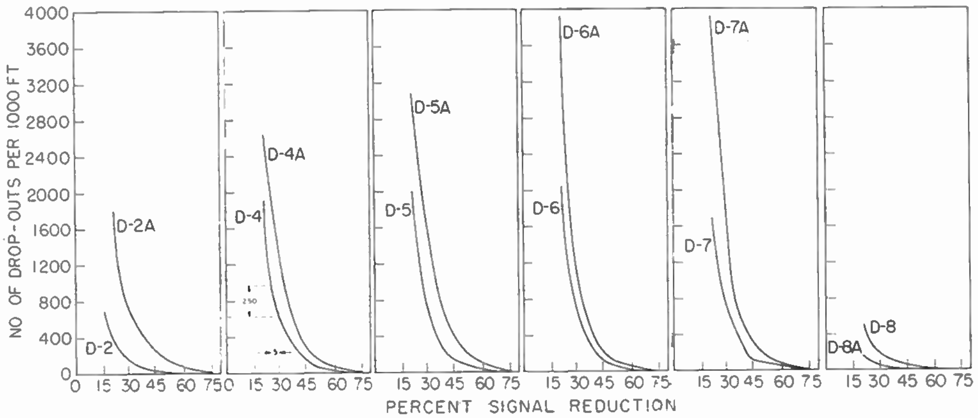

Fig. 4—Amplitude distribution of drop-outs.

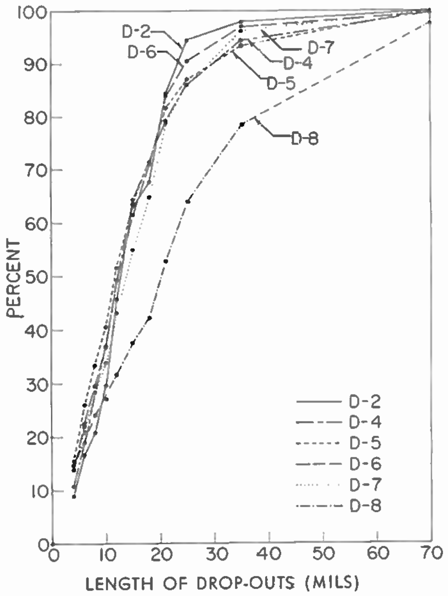

Fig. 5—Length distribution of drop-outs.

Data Processing

Even after very few tapes had been run and drop-outs counted, it was apparent that the processing of the data into a useful form was going to be a difficult problem. It seemed that the only solution would be the use of a computer. Considerable time and effort were spent in determining the way in which the data was to be processed and the format in which to present it. It was realized that a true statistical analysis could not be made, but it did seem that statistical methods of treatment of the data could be utilized.

Data Presentation Format: Several formats of data tables were programmed through a computer and the final results submitted to various laboratory personnel and visitors for comment. As a result a compact format was selected that is believed to contain all the information required to evaluate a tape and/or machine. Table I (next page) represents the data from testing of any number of reels of tape of the same type, run on the same machine, and represents the initial condition of the tape as received from the manufacturer. A brief explanation of the table will be given:

1) The left column "Amplitude threshold" designates the amplitude threshold used.

2) The column "Total number" first gives the average number of drop-outs per 1000 ft, for all reels and runs, and below this, the standard deviation of the average from reel to reel. This shows the consistency from reel to reel.

3) The next column "Reel standard deviation" shows first the average of the standard deviation of the means for each reel, and the lower figure shows the standard deviation of this mean of standard deviations. The top figure indicates how much variation to expect within any one reel of this type of tape while the lower figure indicates the consistency of the standard deviation from one reel to another.

4) The figures in the "Slope" column indicate the average per cent increase (positive number) or decrease (negative number) in drop-outs which can be expected on each successive pass of the tape relative to the first pass.

5) The column "Minimum-Maximum" shows the minimum and maximum drop-out counts that were encountered in the complete test.

6) The next column shows the percentage of total drop-outs represented by the drop-outs for the particular amplitude threshold shown.

7) The rest of the data is concerned with the breakdown of the drop-outs into lengths, with a percentage of the total number and its standard deviation shown for each length. This data is useful in determining, for any given application, how much information would be lost. It has been found that only the 3-db figures are sufficient. Therefore, all future data tables will have only the 3-db drop-outs broken down into lengths.

This data can be arranged in graphs and tables of various types to bring out certain relationships, such as

TABLE I

COMBINED DROP-OUT DATA FOR ONE TAPE TYPE—ALL REELS

Amplitude threshold db	Total number mean and std. dev.	Reel standard deviation mean std. dev.	Slope index	Minimum Maximum values	Per cent of total no. mean and std. dev.	Per cent of total for each length shown		Length, mils
						Mean	Std. dev.	
3	153.60	32.45	22.90	57.00	84.66	5.75	1.92	36–560
	37.20	24.68		286.00	3.79	40.28	4.87	16–35
						30.00	3.17	9–15
						23.94	4.78	3–8
6	23.95	5.35	24.55	3.00	14.15	12.13	7.00	36–560
	8.60	2.34		41.00	3.22	56.78	8.06	16–35
						14.82	5.60	9–15
						16.23	5.26	3–8
12	1.85	0.84	−7.78	0.00	1.16	10.16	20.33	36–560
	1.20	0.57		5.00	0.72	49.16	35.43	16–35
						7.32	10.41	9–15
						13.33	20.97	3–8

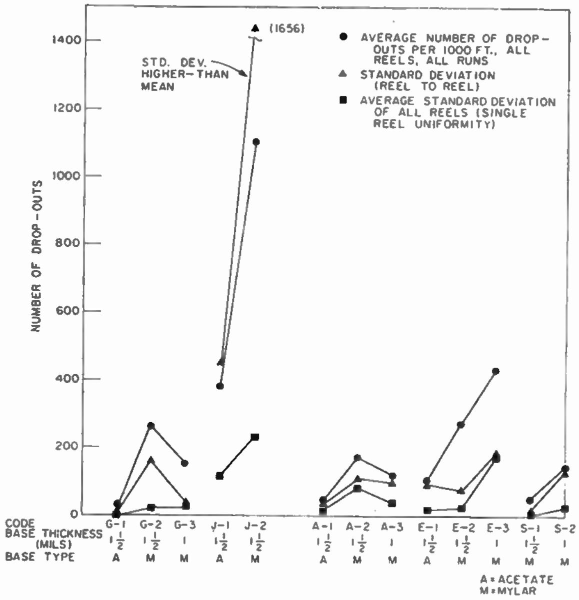

Fig. 6—Number of 3-db drop-outs and standard deviations for 5 reels of each type of tape (1959 tapes).

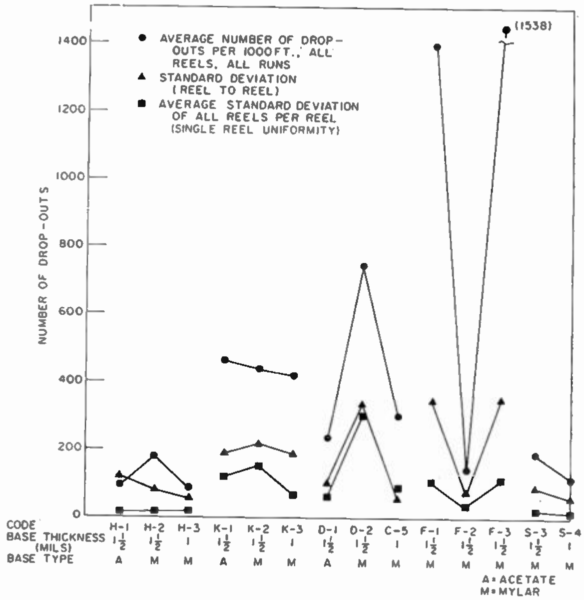

Fig. 7—Number of 3-db drop-outs and standard deviations for 5 reels of each type of tape (1960 tapes).

to determine if there is any significant difference in backing material among all manufacturers, or whether all tape of the same manufacturer exhibit similar characteristics.

Data Graphs: One type of plot was made from all this data and is shown in Figs. 6 and 7. A standard oxide coated on 1½-mil acetate, 1½-mil Mylar and 1-mil Mylar was selected from each manufacturer, where possible, and the average number of 3-db drop-outs per 1000 ft, the standard deviation reel to reel, and the average standard deviation of all reels are shown for tapes of 1959 and of 1960 production. This same type of information will be available this summer for 1962 production tape.

Wear Tests: After running very few tapes, it seemed that the measurement of drop-outs could be a very sensitive method of determining the wear characteristics of a tape with only a few passes. Therefore, tests were set up to run every tape several times with a new recording made on each run since evidence clearly shows that the recording process determines the drop-out condition of a tape to a greater extent than the reproducing process. This had been assumed for years as a result of obtaining considerable qualitative data, but the use of the chart recorder has given quantitative data to prove it.

Drop-out Repeatability: Table II shows the per cent repeatability of drop-outs on reproducing runs only, and then on recording-reproducing runs. Chart recordings were used and drop-outs were compared each to each.

As can be seen from the table, for reproducing runs 70 per cent of the drop-outs that occurred once reappeared on all runs. Only 10 per cent appeared only on one run. However, with new recordings made for each run, only 45 per cent of the drop-outs appeared on each run, but 20 per cent appeared only once. It should be pointed out that these figures show the most favorable relation since all runs were made under fairly high bias conditions. If the bias were to be adjusted for maximum output, as is usual, the repeatability of drop-outs from one recording to another would drop considerably. And in non-biased saturated systems, the repeatability from one run to another can be so low that it is difficult to obtain any kind of statistical correlation.

TABLE II

Repeatability of Drop-Outs on Successive Runs (Per cent* of Total Number)

Number of runs the same drop-out occurs	Reproduce each run	Record and reproduce each run
4	50	45
2 or 3	20	35
1	10	20

* Average per cent from 4 tapes.

Figs. 8 and 9 are short samples of the chart recording that was used to obtain the repeatability figures of Table II. Fig. 8 shows a tape that was reproduced 4 times. There is a slight timing error between runs, but it is always easy to recognize and compensate for such error. The chart paper is generally run at 3 inches per minute and only on very bad tape do drop-outs occur so frequently that one mark on the chart may represent more than one drop-out. The tape speed was $7\frac{1}{2}$ ips. Since one minute of time represents 37.5 ft of tape, the chart is quite compressed. Higher chart speeds (up to 12 ipm) have been used to study a particular phenomenon.

A study of the 6-db and 12-db drop-outs shows that generally they are quite repeatable, and even when not,

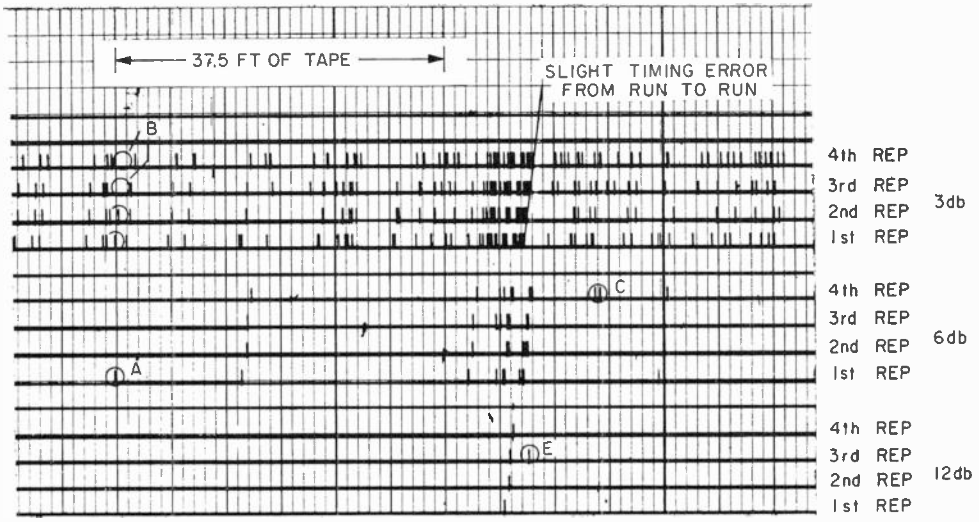

Fig. 8—Small section of chart. Sample recorded once and reproduced 4 times.

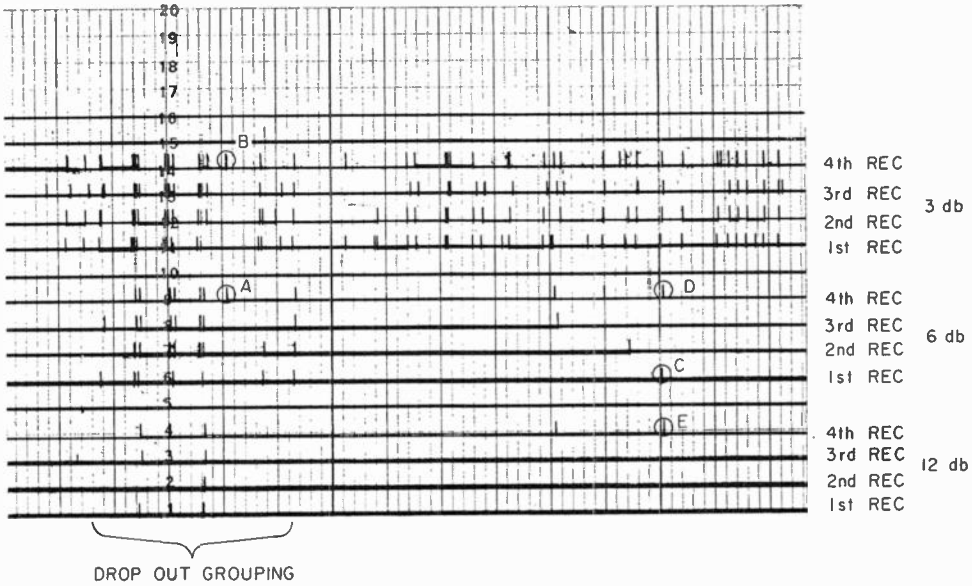

Fig. 9—Small section of chart. Sample recorded and reproduced each run for four runs.

a drop-out of lesser magnitude can usually be found to correspond to the nonrepeating higher magnitude drop-out. Two of these cases are noted in the 6-db plot. The 6-db drop-out on the first reproduction at the far left, A, did not repeat. It can be seen, however, that although a 3-db drop-out occurred on both the first and second runs, it did not appear on the third and fourth runs.

There is a different situation with the two close 6-db drop-outs in the fourth run shown at C. These did not show up until the fourth run, but an inspection of the 3-db charts show that these drop-outs were there all the time. A final example is that of the 12-db drop-out at E. It appeared only on the third run, while a 3-db and 6-db drop-out occurred at this point for each run. This is an indication of how machine variation in tension can cause such different drop-out counts on successive runs.

Fig. 9 shows another chart sample, one made where each successive run was of a new recording. While there still are a large number of drop-outs that repeat exactly, the general pattern does appear more irregular than Fig. 8. Some specific examples are noted. The 6-db drop-out at A, and the corresponding 3-db drop-out at B, appeared only on the fourth recording. There were 6-db drop-outs, C and D, on recordings 1 and 4, with a 12-db drop-out, E, appearing only on the fourth recording. There were 3-db drop-outs at this location on all recordings.

Another general effect can be seen from these charts, although on such a short sample it is not so striking. Drop-outs often occur in groups. A section of tape that contains large drop-outs often is preceded and followed by smaller drop-outs. This can be seen in Fig. 9 at the left of the chart.

A brief explanation of why the recording process is more responsible for the formation of drop-outs than the reproducing process will be given. The signal drop due to loss of contact in the reproducing process can be calculated by the separation loss formula of 54.6-db loss per wavelength of separation. With a 1-mil recorded wavelength, a separation of $\frac{1}{10}$ mil would cause a 5-db drop in signal. Obviously it would not take much dirt to cause severe drop-outs during the reproducing process. On particularly bad or dirty tapes, the drop-outs due to the reproduction process can become very large and numerous. However, under some conditions this same loss of contact distance of $\frac{1}{10}$ mil can cause more than a 5-db drop in signal during the recording process. This may be explained by the use of Fig. 10 which shows the range of the output vs the bias curves for all the tapes used in obtaining the data for this study. In order to improve high-frequency response, most recording systems are set to use the lowest bias possible, perhaps in the region of A. Below this point the output decreases very rapidly for less bias. Limited measurements taken by the author have indicated that the effective bias in the tape itself is quite sensitive to the loss of contact between tape and head. A $\frac{1}{10}$ mil separation can easily reduce the effective bias to about 50 per cent or even 25 per cent of its original value. At 50 per cent, the output could be down over 15 db while at 25 per cent it could be down by 30 db. Obviously, if drop-out effects are to be reduced in the recording process, the bias used should be higher on the output bias curve.

It has long been assumed that the biased recording process might result in more drop-outs than in the saturated unbiased recording process as is used in FM carrier and digital applications. The previous paragraph points out how the changing effective bias level would affect the amplitude of the recorded signal. It would seem that if no bias is used, then this cirtical condition would not exist. However, actual tests of unbiased saturation systems indicate that the drop-out count is slightly higher than in a well-biased system. This would seem logical since the curve of output vs recording signal level (unbiased) is somewhat like Fig. 11. The curves rise sharply just before saturation; therefore, if a loss of contact occurs while a normal saturating signal is being applied, the actual flux reaching the tape can easily drop low enough to reduce the output considerably. Fig. 12 is a small section of a chart showing the same section of tape recorded with the standard biased signal, shown as A (for analog) and then erased and recorded with a saturated square wave of the same frequency and is shown as D (for digital).

Qualitative Rankings: One further example of the way

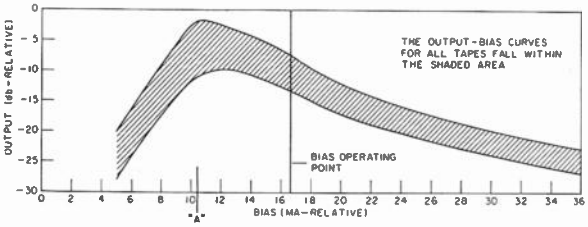

Fig. 10—Output-bias curve limits for all tapes used.

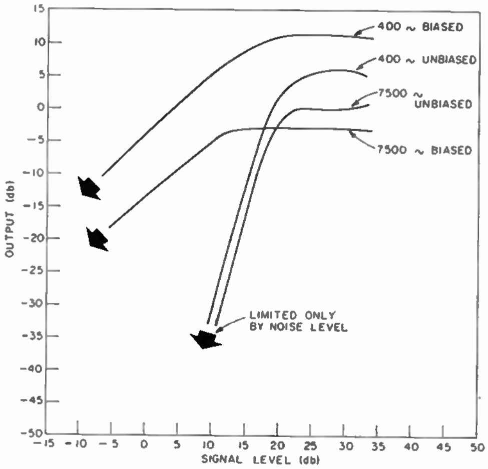

Fig. 11—Output vs input for biased and unbiased recording signals.

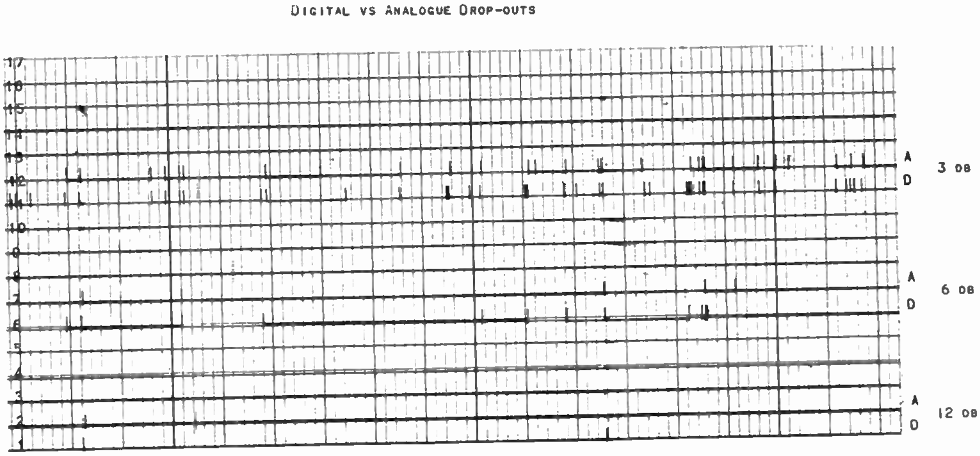

Fig. 12—Small section of chart. Biased and nonbiased recordings.

TABLE III

ANALOG-DIGITAL RATINGS

Tape code	Analog ratings		Digital ratings	
	Initial	Wear	Initial	Wear
C-1	B	C	A	C
C-2	A	C	A	A
C-3	A	D	A	D
C-4	D	B	F	B
C-5	C	B	C	A
D-1	C	B	A	D
D-2	D	B	F	B
F-1	F	C	C	F
F-2	B	A	C	B
F-3	F	B	F	A
H-1	A	B	C	A
H-2	B	B	A	C
H-3	A	B	A	C

in which the drop-out data can be and is being used is in the relative ranking of tapes according to analog and digital capabilities. Such a ranking is only a very crude first step in trying to arrive at some kind of classification system, and was used only because of a special requirement.

This particular rating was done to supply data to the National Bureau of Standards to help determine the correlation between the the drop-out measurement technique and a Bureau of Standards chemical technique of testing the quality of tape.

Tapes were grouped into 5 classifications, A (Excellent), B (Good), C (Average), D (Poor), and F (Very Poor). The table of rating that resulted from such a treatment is shown in Table III. At least a definite idea can be obtained concerning the relative merits of tapes for analog and digital applications, though these ratings are not proposed as, or can they be considered as, rigidly correct. The kinds of figures encountered and the rating scale used to arrive at the grades listed are shown in Table IV. It must be repeated that these figures should not be used as an absolute guide to classify tapes.

TABLE IV

RATING SCALE FOR ANALOG-DIGITAL RATINGS

Initial values in number per 1000 ft			Wear in per cent
Rating	3 db	12 db	3 db and 12 db
A	0–100	0–$\frac{1}{4}$	Any—value to +2
B	100–200	$\frac{1}{4}$–1	2 to 15
C	200–500	1–4	15 to 50
D	500–1000	5–10	50 to 150
F	Over 1000	Over 10	Over 150

CONCLUSIONS

As a result of over two years of testing tapes and machines, measuring drop-outs with the equipment described, using the chart recorder, constantly monitoring the output signal on an oscillosope, and noting the oxide build up on heads, rollers, and guides, the following conclusions have been reached:

1) Reel effects on these short-term drop-outs is relatively minor. Warped and eccentric reels would usually affect several inches of tape so the variations in output signal would be relatively long. However, the shorter drop-outs can be affected by the way a tape winds on itself on a reel. If an edge of the tape protrudes from the stack, it may become scalloped and thus make poor contact when pulled across a head. It is recommended that tape never be left in a high-speed wind condition.

2) Environmental dirt in a normal laboratory atmosphere is relatively minor. Tests made with tapes that had no oxide to shed showed remarkable consistency run after run, and even drop-out to drop-out.

3) Difference in drop-out counts on different machines, excluding any obvious physical damage to the tape, are determined by the manner in which the transport controls the tape as it is drawn over the heads. Transports with tight loops are generally better than those with open loops, though the wear is usually more severe. It would seem reasonable to assume that the tighter the tape is held against the head, the less effect a tape imperfection or physical deformity would have on

the signal output, while at the same time more wear could be expected. Machines do not generate drop-outs.[1] They do change the effective size of any given drop-out.

4) Self-dirt in the form of oxide flaking and build-up is certainly one of the main causes of increased drop-out counts with use. If it is assumed that a new tape has a clean surface (and this assumption is by no means always valid) the first run of a tape should be a good indication of the imperfections of the surface of the tape. As tapes are run repeatedly, flakes of oxide coating wear off or flake off and can become attached to the heads, the rollers, and pressure idlers, or to the tape itself. Photographs of oxide particles building up on tape surfaces have been published by many researchers. Such self-dirt does play an important part in the drop-out history of a tape. If the machine surfaces are kept thoroughly clean, the drop-out count tends to remain more consistent. However, even machine cleanings after every 1000-ft pass of tape fail to prevent the oxide from building up on the tape itself. One possible solution to this problem is the continuous cleaning of the tape as it is passing through the machine as some machines now are equipped to do. However, it has yet to be proven by quantitative data just what is the most effective cleaning technique. Various methods of cleaning are being investigated using the drop-out measuring equipment. While the information is still not complete, results so far show that ultrasonic cleaning techniques improve very dirty tape, especially where large drop-outs are numerous, but that small drop-outs may even increase. Preliminary tests of a vacuum cleaning unit show very little effect on drop-out count. It would be expected that loose particles would be removed, but it has been shown by others that oxide particles are usually fused onto the surface of the tape, apparently by the pressure and heat to which a tape is exposed while going through a tape drive system. Knife edge cleaning systems have not been tested as yet. It would seem that such a method could remove some fused flakes but the danger of physically injuring other areas of the tape must be considered.

Scope of Present and Future Efforts

In addition to a study of various cleaning methods, wide tapes are being investigated to determine channel to channel correlation, and effects on various channels due to wear on various types of machines. Efforts will continue to simplify the amount of data required to properly evaluate any given recording system for a specific type of application. There has been considerable evidence that some recent tapes have been remarkably improved so it is expected that during the next few months another complete testing will be made of all current 1962 production instrumentation and digital tapes.

---

[1] If machine guides and rollers are not properly aligned with the reels, drop-outs on edge tracks can increase due to physical action on the tape edges.

Contributors

Benjamin B. Bauer (S'37–A'39–SM'44–F'53), for a photograph and biography, please see page 181 of the September–October, 1961, issue of these TRANSACTIONS.

◆

James J. Brophy was born in Chicago, Ill., on June 6, 1926. He received the B.S. degree in electrical engineering in 1947, the M.S. degree in physics in 1949, and the Ph.D. degree in physics in 1951, all from the Illinois Institute of Technology, Chicago.

He has been with the Armour Research Foundation, Chicago, Ill., since 1951, and is presently Director of Technical Development.

Dr. Brophy is a Fellow of the American Physical Society and a member of Sigma Xi.

◆

Robert H. Carson was born in St. Mary's, West Virginia, on April 16, 1912. He received the B.S. degree in electrical engineering at the University of Arizona, Tucson, Ariz., in 1933, where he also did graduate work in education.

He taught science, mathematics and radio at the Marana and Phoenix High Schools, Ariz., from 1936 until 1942. In that year he became a Research Associate at the Harvard Electro-Acoustic Laboratory, Cambridge, Massachusetts, specializing in research and development of special recording devices. He remained there until 1945 when he joined the Naval Research Laboratory, Washington, D. C., where he continued research into recording processes and development of special recorders for various Naval applications. He is now the Section Head of the Recording and Air Acoustics Section of Transducer Branch of Sound Division.

Mr. Carson is a member of the Acoustical Society of America and the Audio Engineering Society of America.

◆

J. E. Dickens was born in Sheffield, England, on August 29, 1929. He graduated with the Ph.D. degree in physical chemistry from Oxford University, Oxford, England, in 1954.

He worked at Imperial Chemical Industries, Ardeer, Scotland, from 1954–1955 and 1956–1958, with a post-doctoral appointment at Northwestern University, Evanston, Ill., in 1955–1956. He has been a Research Chemist in the Film Department of Du Pont de Nemours and Co., Wilmington, Del., since 1958.

◆

James J. Faran Jr. (S'49–A'51–SM'54) was born in Youngstown, Ohio, on April 1, 1921. He received the B.A. degree from Washington and Jefferson College, Washington, Pa., in 1943. He attended the Massachusetts Institute of Technology, Cambridge, for one year, and received the M.A. and Ph.D. degrees from Harvard University, Cambridge, Mass., in 1947 and 1951, respectively.

From 1944–1946, he engaged in war research at the Harvard Underwater Sound Laboratory and the Harvard Systems Research Laboratory, Cambridge, Mass. In 1951, he worked at the Harvard Acoustics Research Laboratory studying the application of correlation techniques to acoustic receiving systems. In 1952, he joined the General Radio Company, West Concord, Mass., where he is now engaged in the design and development of electronic instruments.

Dr. Faran is a member of Phi Beta Kappa and Sigma Xi, and is a Fellow of the Acoustical Society of America.

◆

Walter T. Fiala was born in Vienna, Austria, on November 29, 1920. He was graduated in 1944, as Diplom Ingenieur in physics, and also received the Ph.D. degree in physics (summa cum laude) in 1954, both from the Technische Hochschule, Vienna, Austria.

His experience includes seven years at Henry Radio in Vienna as Head of Transducer Research and Development; two years at Madras Institute of Technology, Madras, India, as Professor of Electronics; five years as Chief Physicist for Altec Lansing Corporation Anaheim, Calif.; and two years as Assistant Director for the LTV Research Center, Western Division, Anaheim. His sixteen years of practical and theoretical experience have been in the fields of basic and applied research and development of all types of transducers and electro-acoustic systems. He has long, extensive experience with all acoustic test and calibration procedures, and has developed several new techniques. He has experience in unique areas, such as high-intensity sonic environmental systems, high-intensity sound measurement in extreme environments, and ultrasonics in air up into the megacycle range. He developed electro-pneumatic transducers with kilowatts of acoustic output. He is presently with LTV Research Center, Western Division, Anaheim, Calif.

Dr. Fiala is a member of the Acoustical Society of America.

◆

Robert G. Fulks (S'56–M'60) was born in Kansas City, Mo., on April 8, 1936. He received the B.S. and M.S. degrees from the Massachusetts Institute of Technology, Cambridge, Mass., in 1959.

He then joined the General Radio Company, West Concord, Mass., where he has been engaged in the design and development of electronic instruments.

Mr. Fulks is a member of Sigma Xi and Eta Kappa Nu.

◆

John K. Hilliard (A'25–M'29–SM'43–F'52) was born in Wyndmere, N. Dak., on October 22, 1901. After receiving the B.S. degree in physics from Hamline University in 1925 he did graduate work in electrical engineering at the University of Minnesota, Minneapolis. In 1951 he received the D.Sc. degree in engineering from Hollywood University, Calif.

He spent fourteen years at MGM Studios working on the development of recording and reproducing film and tape equipment and designing microphones and loudspeakers for theaters. Also, he was Project Engineer at the Radiation Laboratories, M.I.T., Cambridge, Mass., working on radar. For ten years he was engaged with high-intensity sound environmental equipment. He designed a microphone for measurement of nuclear blast, high-speed boundary layer measurements, high-intensity environmental equipment to simulate jet and missile engine noise to evaluate fatigue of electronic equipment and air frame structures, microphones to pick up heart sound, communication equipment for telephone systems and anti-submarine warfare equipment. From 1943 to 1960 he was with the Altec Lansing Corporation, Anaheim, Calif., first as Vice President, Advanced Engineering Department, working with transducers and communication equipment, and recently as Director of the LTV Research Center, Western Division, Anaheim, Calif.

Dr. Hilliard is a Fellow of the Acoustical Society of America, the Audio Society, and SMPTE; a member of Eta Kappa Nu, AIEE, Armed Forces Committee on Hearing Bioacoustics and the Institute of Environmental Engineers. He is also an Acoustic Consultant at the Brain Institute, UCLA Medical School, Calif.

❖

R. J. Kerr was born in Johnstown Pa., on September 1, 1926. He attended Swarthmore College, Swarthmore, Pa., and graduated with a B.S. degree from the College of Wooster, Wooster, Ohio, in 1952.

He taught in the U. S. Navy underwater sound school during the war and joined Du Pont de Nemours and Co., Wilmington, Del., in 1952, where he presently is a Research Engineer in the Film Department.

Mr. Kerr is a member of the RESA.

❖

Donald E. Richardson was born in Farine, Ill., on April 12, 1899. He received the B.S. degree in electrical engineering from Armour Institute of Technology (presently Illinois Institute of Technology), Chicago, Ill., and the M.S. degree in physics from the University of Chicago, Chicago, Ill.

He has been with Armour Research Foundation, Chicago, Ill., since its inception in 1936 where he presently is a Senior Engineer in the Electronics Research Division.

Mr. Richardson is a Fellow of the AIEE.

❖

Arnold Schwartz (A'61) was born in New York, N. Y., on July 16, 1926. He received the B.S. degree from the City College of New York, N. Y. in 1949 having taken graduate studies there as well as at the Polytechnic Institute of Brooklyn, N. Y.

During World War II, he was an Electronic Specialist in the U. S. Navy for two years. He has an extensive background since 1949 in electromechanical devices, circuit design and analysis and very short wavelength disk recording and reproduction. He has been associated with the Bendix Corporation, Teterboro, N. J.; the Sonotone Corporation, Elmsford, N. Y.; and University Loudspeakers, Inc., White Plains, N. Y., in design and production engineering. Since 1959 he has been employed by CBS Laboratories, Stamford, Conn., as a Project Engineer in the Audio Research Section, where his activities have included stereophonic disk recording research requiring psychoacoustic studies in sound localization and the importance of source symmetry, ceramic microphone development, and nonlinear circuitry development for use with a transmission system in such a manner that the output is related to the input linearly.

Mr. Schwartz is a member of the Acoustical Society of America and the Audio Engineering Society of America.

❖

Henry Seiwatz was born in New York, N. Y., on January 27, 1931. He received the B.A. and M.S. degrees in physics from Cornell University, Ithaca, N. Y. He did graduate work in biophysics as an N.S.F. Fellow at Yale University, New Haven, Conn., from 1954 to 1956.

He has been a member of the Physics Research Division of Armour Research Foundation, Chicago, Ill., Since 1956 where he is presently an Associate Physicist in the Solid State Physics Section.

❖

George W. Sioles (M'52) was born in New York, N. Y., on October 15, 1924. During World War II he served as a combat B-29 bombardier-navigator. He received the B.S. degree from Columbia University, New York, N. Y. in 1949 and has taken graduate courses in mathematics and theoretical physics there and at New York University, N. Y.

He has a broad background in engineering and electroacoustics, with specialized experience in loudspeaker research and development. From 1950 to 1953 he was Project Engineer for navigation training devices with the U. S. Naval Training Device Center, Port Washington, N. Y. In 1953 he became associated with University Loudspeakers, Inc., White Plains, N. Y., where he engaged in research and development of all types of loudspeakers; he became Engineering Manager, responsible for the organization's research, development, design, and production. Presently he is Section Head for Acoustical Research at CBS Laboratories, Stamford, Conn., where his responsibilities include the technical direction of psychoacoustic research involving maximization of speech intelligibility in the presence of noise, stereophonic recording and reproduction research, studies of acoustics of bounded space, and research in very short wavelength disk recording, including distortion cancellation by "complementary distortion" techniques.

Mr. Sioles is a member of the Acoustical Society of America and the Audio Engineering Society of America.

INSTITUTIONAL LISTINGS

The IRE Professional Group on Audio is grateful for the assistance given by the firms listed below, and invites application for Institutional Listing from other firms interested in Audio Technology.

Charge for listing in six consecutive issues of the TRANSACTIONS—$75.00. Application for listing may be made to the Professional Groups Secretary, The Institute of Radio Engineers, Inc., 1 East 79 Street, New York 21, N.Y.