Pin-Point
TRANSISTOR TROUBLES
IN 12 MINUTES

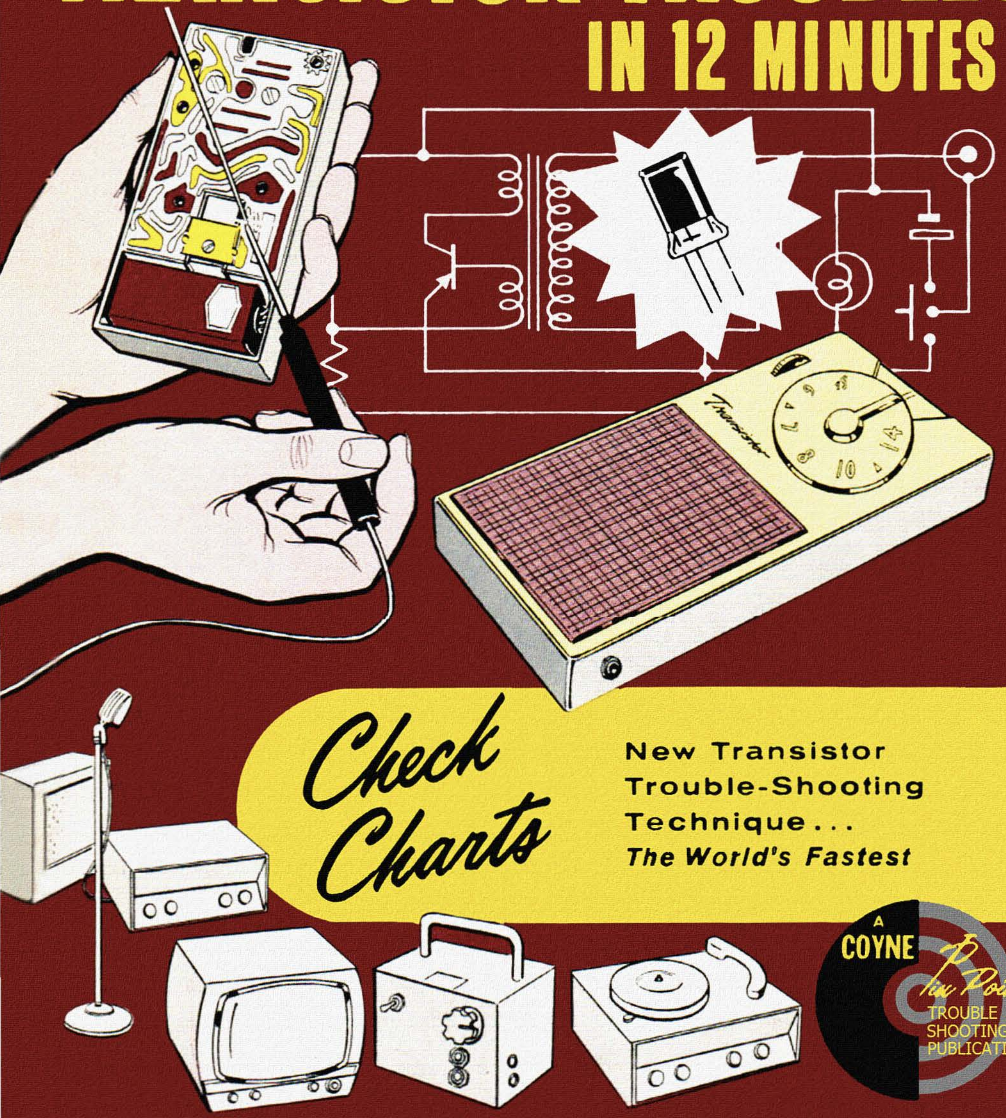

Check Charts

New Transistor Trouble-Shooting Technique . . .
The World's Fastest

A COYNE
Pin-Point
TROUBLE SHOOTING PUBLICATION

PIN-POINT TRANSISTOR TROUBLES IN TWELVE MINUTES

By

LOUIS E. GARNER, JR.

Senior Member, STWE
Life Member, AFCEA
Author, *Transistors and Their Applications,*
The Transistor Circuit Handbook.

Published by

Educational Book Publishing Division

COYNE ELECTRICAL SCHOOL

Chicago 7, Illinois

COYNE ELECTRICAL SCHOOL

1501 W. Congress Pkwy.

Chicago, Illinois

1960 Edition

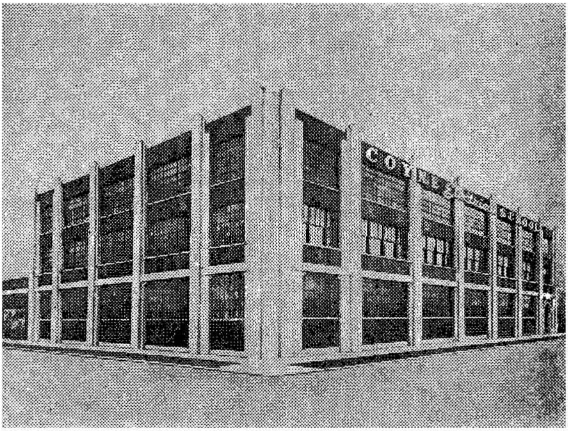

Published in the United States of America

AUTHOR'S PREFACE

Few technical books have received a response as great as that accorded Coyne's first "Pin-Point" book, *Pin-Point TV Troubles in 10 Minutes*. The overwhelming response of practical servicemen and technicians to this publication, as well as the success of later volumes covering color TV and record changers, emphasized the practical man's need for useful, down-to-earth service information that could be put to immediate use in the workshop.

Too often, a servicing book or manual gets bogged down in a mass of theoretical details or obscure mathematics which is of little immediate value in solving the service technician's more urgent problem . . . that of repairing a specific piece of equipment. The "Pin-Point" books have been unique among servicing texts in that they have outlined practical "how to" techniques which the trained technician could put to *immediate use* without exhaustive study, but which, at the same time, were of equal value to students, apprentices, beginners, and others with less background or limited theoretical knowledge.

In a sense, then, the "Pin-Point" books are really shop manuals rather than training textbooks and, as such, are as an important "tool" as the technician's soldering iron, multitester, or diagonal cutters. Properly used, any of the "Pin-Point" books can save good-sized chunks of the practical technician's most valuable commodity . . . his time.

The present volume continues the practical tradition established by the earlier manuals in the series. Here, however, the "Pin-Point" system has been applied to the diagnosis and repair of troubles encountered in all types of transistorized equipment. To a few service technicians, such coverage may seem somewhat premature, for they may have encountered relatively little in the way of transistorized gear in their day-to-day work. The vast majority, on the other hand, have felt the need for practical service data for some time. While the amount of vacuum-tube operated equipment in common use far exceeds the quantity of transistorized gear in consumer hands, the use of transistors is increasing by leaps and bounds, with the day not far distant when the *majority* of electronic equipment will use one or more transistors.

Of perhaps equal . . . if not greater . . . importance to the practical service technician is the mushrooming growth of transistor applications in non-entertainment (phonographs, radio and TV sets) devices. Today, transistors are being used in automobile ignition systems in Geiger Counters, in light flashers, in photoflash equipment, in power converters, and in a grand array of other types of equipment. The repair and maintenance of "non-entertainment" transistorized equipment may, one day, be as important a source of revenue to the practical technician as is radio and TV repair today.

Since the present volume deals with all kinds of electronic equipment rather than with a specific type (such as TV sets or record changers), and, further, since the average technician may be considerably less familiar with transistor circuitry and test techniques than he is with the circuits encountered or test-methods used in his past day-to-day work, the author has found it necessary to vary slightly from the approach used in the earlier books. This has been done without deviating from the basic philosophy of the "Pin-Point" series, however, and the present book, like the earlier manuals, emphasizes practical techniques, and makes liberal use of the popular Troubleshooting Chart method of presentation.

First, since conventional "vacuum tube" test methods and diagnostic techniques often give misleading results when applied directly to transistor circuitry, a part of the volume (Section 1) has been devoted to a discussion of basic test equipment and troubleshooting techniques, with special emphasis on how these techniques must be changed when applied to transistor work.

Second, inasmuch as the practical technician's most valuable "tool" in his knowledge of circuit behavior and his ability to reason back to the cause of a trouble from the nature of the complaint, somewhat greater emphasis has been placed on the discussion of basic circuit operation. Again, however, care has been taken to show how transistor circuits differ from their vacuum tube counterparts.

Third, since *all* types of transistorized equipment are discussed, it has been found impracticable, in most cases, to prepare Troubleshooting Charts which apply to a *specific piece* of equipment or to a specific circuit. Instead, *general* Troubleshooting Charts are given which apply to entire classes of equipment. The exception has been where a specific piece of equipment is considered as fairly typical of a class . . . here, a more detailed method of presentation has been used.

Finally, recognizing that the service technician undertaking transistor work for the first time may have limited access to the detailed reference data often needed in service work, the author has included a section (Section 10) covering such topics as transistor characteristics, lead connections, parameter definitions, transformer and battery specifications, and specialized test and repair methods. Also included in this section is data on transistor interchangeability.

– Louis E. Garner, Jr.
Wheaton, Maryland

ACKNOWLEDGEMENTS

Although the immediate responsibility of the author, any modern technical book, in a larger sense, is a cooperative work made possible by the combined talents, resources, and efforts of innumerable individuals and groups . . . the neighbor who lends an encouraging word . . . the understanding publisher who bears with the author through long delays . . . the magazine writer covering the book's subject in the popular technical press . . . the scientist who discovered the basic principles discussed by the author . . . the advertising agency who furnishes a publicity photograph for background illustration . . . and, of course, the manufacturer who supplies the author with stacks of reference data, service manuals, technical illustrations, and other material. The present volume is no exception.

It would be impossible, then, to render formal acknowledgement to *every* individual or business firm contributing to this book. However, the author does wish to acknowledge the help of those firms, listed below, who made tangible contributions in the way of technical data, illustrations, photographs, tables, charts and similar materials. Individual credits are as listed.

- AIRCRAFT RADIO CORPORATION
  - Fig. 9-19.
- ALLEN B. DU MONT LABORATORIES, INC.
  - Figs. 5-26, 5-27, 5-28, 5-29, 9-27, 9-28.
- ALLIED RADIO CORPORATION
- ARGONNE ELECTRONICS MANUFACTURING CORPORATION
  - Table 10-J.
- AUTOMATIC RADIO MANUFACTURING COMPANY
  - Figs. 4-4, 4-5, 5-18, 5-19, 5-20; Tables 4-D, 5-A.
- ADVANCED RESEARCH ASSOCIATES, INC.
  - Fig. 9-47.
- AUTOTRON, INC.
  - Fig. 9-25.
- BENDIX RADIO, Automotive Products Department
  - Figs. 6-5, 6-6, 6-7, 6-8, 6-9, 6-10, 6-11, 6-14, 6-15, 6-16, 6-17, 6-21, 6-22, 6-23, 6-24, 6-25, 6-26, 6-29, 6-30, 6-31, 6-32; Tables 6-A, 6-C, 6-E, 6-I.
- BENDIX AVIATION CORPORATION, Red Bank Division
  - Table 10-D.

BURGESS BATTERY CORPORATION
    Table 10-I.
CBS-HYTRON, Semiconductor Division
CHICAGO TRANSFORMER COMPANY
    Fig. 9-20.
CUBIC CORPORATION
    Figs. 9-26, 9-30, 9-31, 9-32, 9-33, 9-34, 9-35.
DAVID BOGEN COMPANY
    Figs. 3-5, 3-6.
DELCO RADIO, Division of General Motors
    Figs. 6-12, 6-13, 6-27, 6-28, 7-1, 7-2, 7-3, 9-16; Tables 6-B, 6-H.
ELECTRO PRODUCTS LABORATORIES
    Figs. 1-8, 6-4.
EMERSON RADIO AND PHONOGRAPH CORPORATION
    Figs 4-6, 4-7, 4-8, 10-4(a), 10-4(b).
FIRESTONE TIRE AND RUBBER COMPANY
    Fig. 5-34.
FISHER SCIENTIFIC COMPANY
    Fig. 9-22.
GENERAL CEMENT MANUFACTURING COMPANY
GENERAL ELECTRIC COMPANY, Radio Receiver Department
    Figs. 5-12, 5-31.
GENERAL ELECTRIC COMPANY, Semiconductor Division
    Figs. 3-12, 3-13, 3-14, 3-15, 9-24, 9-45, 9-49, 9-50, 9-51, 9-52, 10-6, 10-9; Tables 10-A, 10-B, 10-C.
HEATH COMPANY
    Figs. 1-13, 5-15, 9-5, 9-17, 9-18.
I.D.E.A., Inc., Regency Division
    Figs. 2-11, 5-2, 5-7, 9-1, 9-2, 9-7, 9-8, 9-9, 9-11.
JOHN OULD, LTD.
    Fig. 3-7.
LAFAYETTE RADIO
    Figs. 1-7, 1-16, 2-13, 3-3, 3-4, 3-10, 9-13.
LANSDALE TUBE COMPANY
    Fig. 9-15.
MAGNAVOX COMPANY
    Figs. 5-21, 5-42; Tables 5-C, 5-D.
MINNEAPOLIS-HONEYWELL, Semiconductor Division
MOHAWK BUSINESS MACHINES CORPORATION
    Fig. 9-41.

MOTOROLA, INC.
Figs. 6-18, 6-19, 6-20, 6-33, 6-34, 6-35, 6-36, 6-37, 6-38, 6-39, 6-40, 6-41, 8-1, 8-2, 9-21, 10-4 (c); Tables 6-D, 6-J, 6-K.
PHILCO CORPORATION
Figs. 5-5, 5-43, 9-48; Tables 5-E.
QUANTUM ELECTRONICS
Fig. 1-9.
RADIO CORPORATION OF AMERICA, Semiconductor Division
Fig. 10-5; Tables 10-E.
RAYTHEON MANUFACTURING COMPANY
RCA SERVICE COMPANY
Figs. 5-22, 5-23, 5-24, 5-25, 5-35, 5-36, 5-37, 5-38, 5-39, 5-40, 5-41; Table 5-B.
R. E. DIETZ COMPANY
Fig. 9-44.
SHURE BROTHERS, INC.
Figs. 2-3, 2-4.
TEXAS INSTRUMENTS, INC.
UNIVERSAL ATOMICS, Division of Universal Transistor Products
Figs. 9-36, 9-37, 9-38, 9-39, 9-40.
WESTINGHOUSE ELECTRIC CORPORATION, Television-Radio Division
Fig. 10-16.
ZENITH RADIO CORPORATION
Fig. 5-44; Table 5-F.
ZIFF-DAVIS PUBLISHING COMPANY

TABLE OF CONTENTS

SECTION 1

SECTION 2

SECTION 3

SECTION 4

SECTION 5

SECTION 6

SECTION 7

SECTION 8

SECTION 9

SECTION 10

HOW TO USE THIS BOOK

This manual is primarily a *tool.* Properly used, it should enable you to isolate troubles in transistorized equipment in a matter of minutes . . . in some instances, in seconds. Like any tool, however, its value depends, to a large extent, upon the skill of the user, and his familiarity with its application. And, like any tool, it can be abused.

To get the most from this manual, then, you should become familiar with it . . . with the material covered, with the method of presentation, and with the location of the specific material you use the most in *your own work.* If you specialize in the repair of Hi Fi audio equipment, for example, you may refer to Sections 2 and 3 regularly, turning to other Sections only on rare occasions. If car radios are "your meat," you may find that Sections 6 and 7 are of maximum value. Finally, if you've had considerable experience in transistor work, you may turn to the manual only when stuck with a "dog" or when you encounter an unfamiliar piece of gear.

There is no *one* "right" way to use this manual. Rather, there are many "right" ways, depending on the needs and requirements of the individual reader. Just as you learn new and better ways to use your soldering iron, long nose pliers, and other shop tools as you gain experience, so will you learn different ways to use this manual as you become familiar with its application.

As a start, however, you'll find it worthwhile to read through the entire book. This "first reading" can be detailed . . . or just a cursory glance through the various Sections, as dictated by your own background and needs. If you've had a moderate amount of experience with transistorized equipment and know transistor circuitry fairly well, you may wish to skim through the book quickly, reading only those sections of immediate interest in your work. On the other hand, if your background in transistor work is limited, you may wish to read through the entire book *carefully,* returning to reread and to study those sections of major interest.

Now that you're generally familiar with the manual, you're ready to use it to simplify your service work. Getting down to specific cases, you'll find the following Step-by-Step outline a useful guide.

STEP 1: Determine the type of equipment. Chances are this will be obvious. The equipment may be an amplifier, receiver, radio transmitter, test instrument, electronic control, TV set, tape recorder, or any of the other types listed in *Table AA*. If you are unable to identify the equipment exactly, identify its general type . . . for example, a special "control amplifier" may be, basically, an audio amplifier with a narrow frequency response. For servicing, it can be treated as an audio amplifier.

STEP 2: Refer to Table AA. With the type of equipment identified, *Table AA* will tell you where to find applicable Troubleshooting Charts. If you are not too familiar with this general class of equipment . . . perhaps it is a transistorized photoflash, and you've never worked on such a unit before . . . refer to the Section of the manual dealing with this type of equipment and read through the text briefly to become familiar with circuit operation.

STEP 3: Use the appropriate Troubleshooting Chart . . . as identified in *Table AA* . . . as a guide in servicing the equipment. In some cases, the Troubleshooting Chart may outline a definite test procedure; in other cases, the Chart may suggest specific defects which can cause various complaints. Generally, there will be more than one Chart which applies to a specific piece of equipment. Use the Chart (or Charts) appropriate to the complaint encountered.

STEP 4: Refer to Table BB . . . for additional service information on various types of commercially manufactured equipment. In preparing this manual, many types of commercial equipment were used to provide examples of transistor circuitry. In most cases, the complete schematic diagram of the equipment is given and, often, additional service data in the way of alignment instructions, layout diagrams, and interior or exterior photographs.

STEP 5: For general Technical Data, refer to Table CC. If you need data on transistor or component specifications, or need to refresh your memory on specific test techniques or repair methods, refer to *Table CC* for the location of such data in this manual.

STEP 6: Make a note of any unusual or unique defects you encounter in Table 10-0 (Section 10). In this way, you can build up your own personal file of valuable "Service Tips" applying to the specific equipment encountered in *your own* work. This will be many times more valuable than a general file which might include "tips" on equipment never encountered in your field of specialization.

TROUBLESHOOTING CHARTS QUICK-REFERENCE TABLE

FOR CHARTS ON		REFER TO		
CLASS	EQUIPMENT	SECTION(S)	TABLE(S)	PAGE(S)
AMPLIFIERS	Audio	2, 3	2-A, 2-B, 2-C, 2-D, 3-A, 3-B, 3-C, 3-D, 3-E	64-65-66-67-92-97-94-95-96
	Booster	3	3-A, 3-B, 3-C, 3-D, 3-E	92-93-94-95-96
	Control	9	9-N	362
	Hearing Aid	2	2-A, 2-B, 2-C, 2-D	64-65-66-67
	High Fidelity	2, 3	2-A, 2-B, 2-C, 2-D, 3-A, 3-B, 3-C, 3-D, 3-E	64-65-66-67-92-93-94-95-96
	Instrument	2, 9	2-A, 2-B, 2-C, 2-D, 9-0	64-65-66-67-377
	Intercom	3	3-A, 3-B, 3-C, 3-D, 3-E	92-93-94-95-96
	Laboratory	2, 3, 9	2-A, 2-B, 2-C, 2-D, 3-A, 3-B, 3-C, 3-D, 3-E, 9-0	92-93-94-95-96 64-65-66-67-377
	Megaphone	3	3-A, 3-B, 3-C, 3-D, 3-E	92-93-94-95-96
	Meter	9	9-0	377
	Microphone	2	2-A, 2-B, 2-C, 2-D	64-65-66-67
	Mixer	2	2-A, 2-B, 2-C, 2-D	64-65-66-67
	Phonograph	3, 9	3-A, 3-B, 3-C, 3-D, 3-E, 9-C	92-93-94-95-96 325
	Power	3	3-A, 3-B, 3-C, 3-D, 3-E	92-93-94-95-96
	Preamplifiers (Preamps)	2	2-A, 2-B, 2-C, 2-D	64-65-66-67
	Public Address	3	3-A, 3-B, 3-C, 3-D, 3-E	92-93-94-95-96
	Recorder	3, 9	3-A, 3-B, 3-C, 3-D, 3-E, 9-R	92-93-94-95-96-389
	Relay	9	9-N	362
	Servo	1, 3, 9	3-A, 3-B, 3-C, 3-D, 3-E, 9-V, 1-A, 1-B, 1-C	92-93-94-95-96-42-43-40-399
	Stereophonic (Stereo)	3	3-A,3-B,3-C,3-D,3-E	92-93-94-95-96
	Stethoscope	2	2-A, 2-B, 2-C, 2-D	64-65-66-67
RADIO RECEIVERS	Automobile (car)	7	7-B, 7-C, 7-D	270-273-274
	Automobile (car), "Hybrid"	6	6-L, 6-M, 6-N	251-252-253
	Broadcast Band	5	5-G, 5-H, 5-I, 5-J, 5-K, 5-L, 5-M	185-183-184-186 187-188-189
	Broadcast Band, "Hybrid"	4	4-A, 4-B, 4-C, 4-D	110-111-112-113

TABLE AA CONTINUED ON NEXT PAGE

TROUBLESHOOTING CHARTS QUICK-REFERENCE TABLE

FOR CHARTS ON		REFER TO		
CLASS	EQUIPMENT	SECTION(S)	TABLE(S)	PAGE(S)
RADIO RECEIVERS	Communications	5	5-G, 5-H, 5-I, 5-J, 5-K, 5-L, 5-M	185-183-184-186-187-188-189
	Conel rad	9	9-B	323
	Converter, Amateur Band	9	9-H	335
	Converter, FM to TV	9	9-J	340
	Direction Finder	5, 9	5-G, 5-H, 5-I, 5-J, 5-K, 5-L, 5-M, 9-E	185-183-184-186-187-188-189-330
	Long-wave	5, 9	5-G, 5-H, 5-I, 5-J, 5-K, 5-L, 5-M, 9-E	185-183-184-189-186-187-188-330
	Marine	5, 9	5-G, 5-H, 5-I, 5-J, 5-K, 5-L, 5-M, 9-E	185-183-184-186-187-188-189-330
	Multi-band	5	5-G, 5-H, 5-I, 5-J, 5-K, 5-L, 5-M	185-183-184-186-187-189-189
	Navigator	9	9-E	330
	Pocket	5	5-G, 5-H, 5-I, 5-J, 5-K, 5-L, 5-M	185-183-184-186-187-188-189
	Radio-Phonograph	9	9-C	325
	Short-wave	5, 9	5-G, 5-H, 5-I, 5-J, 5-K, 5-L, 5-M, 9-H	185-183-184-186-187-188-189-335
	Television	8	8-A, 8-B, 8-C, 8-D, 8-E, 8-F	309-311-313-314-315-316
	Truck	6	6-L, 6-M, 6-N	251-252-253
RADIO TRANSMITTERS	Conventional	9	9-K	346
	Modulators	3	3-A, 3-B, 3-C, 3-D, 3-E	92-93-94-95-96
	Phono Oscillators	9	9-K	346
	Remote Control	9	9-K, 9-M	346-355
	Wireless Microphones	9	9-K	346
POWER SUPPLIES	Amplifier	3	3-D	95
	Automobile radio	6	6-0	254
	Converter, D.C. to A.C.	9	9-L	351
	Converter, D.C. to A.C.	9	9-L	351
	Dosimeter Charger	9	9-Q	384
	High voltage (Photoflash, Strobe)	9	9-U	397
	Inverter, D.C. to A. C.	9	9-L	351
	Photoflash	9	9-U	397
	Receiver	5	5-N	190
TEST INSTRUMENTS	Amplifiers	3, 9	3-A, 3-B, 3-C, 3-D, 3-E, 9-0	92-93-94-95-96-97-377
	Bridges, Imedance	9	9-0	377
	Curve Tracers	9	9-0	377
	Field Strength Meter (Service as receiver)	5, 9	5-G, 5-H, 5-I, 5-J, 5-K, 5-L, 5-M, 9-0	185-184-183-185-187-188-189-377

TABLE AA – CONTINUED ON NEXT PAGE

TROUBLESHOOTING CHARTS QUICK-REFERENCE TABLE

FOR CHARTS ON		REFER TO		
CLASS	EQUIPMENT	SECTION(S)	TABLE(S)	PAGE(S)
TEST INSTRUMENTS	Frequency Meter	9	9-0	377
	Meters	9	9-0	377
	Preamplifiers	2, 9	2-A, 2-B, 2-C, 2-D, 9-0	377-64-65-66-67
	Pulse Generators	9	9-0	377
	Radiation Instruments	9	9-P, 9-Q	382-384
	Signal Generator, Audio	9	9-0	377
	Signal Generator, Radio (Service as small Transmitter)	9	9-K, 9-0	347, 377
	Signal Tracer, Tuned (Service as radio Receiver)	5, 9	5-G, 5-H, 5-I, 5-J, 5-K, 5-L, 5-M, 9-0	185-184-183-186-187-188-189-379
	Signal Tracer, Untuned (Service as audio Amplifier)	3, 9	3-A, 3-B, 3-C, 3-D, 3-E, 9-0	92-93-94-95-96-377
	Sound Level Meter (Service as audio Preamp)	2, 9	2-A, 2-B, 2-C, 2-D, 9-0	64-65-66-67-377
	Square-wave Generator	9	9-0	377
	Stethoscope (Service as audio Preamp)	2, 9	2-A, 2-B, 2-C, 2-D, 9-0	64-65-66-67-377
	Sweep Generator (Service as small Transmitter)	9	9-K, 9-0	346, 377
	Waveform Generator	9	9-0	377
	Wavemeter	9	9-0	377
SPECIAL EQUIPMENT	Alarms, Burglar	9	9-N	362
	Alarms, Fire	9	9-N	362
	Alarms, Flood	9	9-N	362
	Automobile Ignition systems (Service as Power Supply)	9	9-L	351
	Computers	1, 9	1-A, 1-B, 1-C, 9-W	40-42-43-405
	Conelrad Alarm Receiver	9	9-B	323
	Controls	9	9-N	362
	Controls, Radio Remote	9	9-M	355
	Dosimeter Charger	9	9-Q	384
	Flashers, Lamp	9	9-T	394
	Geiger Counter	9	9-P	382
	Humidity Controls	9	9-N	362
	Instruments	9	9-0	377
	Organs, Electronic (Service as Audio Amplifiers)	3	3-A, 2-B, 3-C, 3-D, 3-E	92-93-94-95-96
	Photoelectric Controls	9	9-N	362
	Photoflash	9	9-U	397
	Radio Direction Finders	9	9-E	330
	Radio Navigators	9	9-E	330
	Radiological Survey Meter	9	9-P	382
	Servo Systems (Service as Audio Amplifiers)	1, 3, 9	1-A, 1-B, 1-C, 3-A, 3-B, 3-C, 3-D, 3-E, 9-V	40-42-43-92-93-94-95-96-399
	Tape Recorders	9	9-R, 9-S	399-390

Table AA — Concluded

COMMERCIAL EQUIPMENT SERVICE DATA

TRADE NAME OR MANUFACTURER	MODEL NUMBER	TYPE OF EQUIPMENT	REFERENCE DATA			
			FIG. NOS.	PAGES	TABLES	PAGES
AUTOMATIC RADIO MFG.	PTR-15B	Receiver	5-18, 5-19, 5-20	139-140-141	5-A	142
AUTOMATIC RADIO MFG.	TT-600	Receiver	4-4, 4-5	101-102	4-D	113
BENDIX RADIO	FM88BH	Automobile FM Tuner	6-25, 6-26	221-222	6-F, 6-G	223-224
BENDIX RADIO	R74BT	Truck Receiver	6-21, 6-22 6-23, 6-24	217-218 219	6-E	220
BENDIX RADIO	R84BC	Automobile Receiver	6-14, 6-15, 6-16, 6-17	208-209 210-211	6-C	213
BENDIX RADIO	R84BF	Automobile Receiver	6-5, 6-6, 6-7, 6-8 6-9, 6-10, 6-11	198-199-200 201-202-203 204	6-A	205
BENDIX RADIO	R84BT	Truck Receiver	6-21, 6-22 6-23, 6-24	217-218 219	6-E	220
BENDIX RADIO	R85BM-S	Automobile Receiver	6-29, 6-30, 6-31, 6-32	230-231 235	6-I	236
BOGEN, DAVID	BT12	Public Address Amplifier	3-5, 3-6	75-76	--	--
CADILLAC BROUGHAM	7268085	Automobile Receiver	7-1, 7-2, 7-3	258-259-264	7-A, 7-B, 7-C, 7-D	266-270 273-274
CENTRALAB	TA-6	Preamplifier	2-1	46	--	--
CENTRALAB	TA-7	Preamplifier	2-1	46	--	--
CENTRALAB	TA-11	Hearing Aid Amplifier	2-14, 2-15	59-60	--	--
CHEVROLET CORVETTE	372156	Automobile Receiver	6-27, 6-28	227-228	6-H	229
CHEVROLET	987575	Automobile Receiver	6-12, 6-13	206-207	6-B	208
CUBIC CORPORATION	500	Waveform Generator	9-30, 9-31 9-32	368-369 370	--	--
CUBIC CORPORATION	502	Pulse Generator	9-33, 9-34	371-372	--	--
CUBIC CORPORATION	504	Curve Tracer	9-35	374	--	--
DELCO RADIO	372156	Automobile Receiver	6-27, 6-28	227-228	6-H	229
DELCO RADIO	987575	Automobile Receiver	6-12, 6-13	206-207	6-B	208
DELCO RADIO	7268085	Automobile	7-1, 7-2, 7-3	258-259 264	7-A, 7-B 7-C, 7-D	
DU MONT, ALLEN B.	1210(RA-902)	Receiver	5-26, 5-27, 5-28, 5-29	148-149 150-151	--	--
EMERSON RADIO	838	Receiver	4-6, 4-7	104-105	--	--
EMERSON RADIO	843	Receiver	4-8	106	--	--
FIRESTONE	4-C-29	Receiver	4-4, 4-5	101-102	4-D	113
FIRESTONE	4-C-33	Receiver	5-18, 5-19, 5-20	139-140 141	5-A	142
FIRESTONE	4-C-34	Receiver	5-34	155	--	--

TABLE BB – CONTINUED ON NEXT PAGE

COMMERCIAL EQUIPMENT SERVICE DATA

TRADE NAME OR MANUFACTURER	MODEL NUMBER	TYPE OF EQUIPMENT	REFERENCE DATA			
			FIG. NOS.	PAGES	TABLES	PAGES
FORD	B8A-18805-B	Automobile Receiver	6-5, 6-6, 6-7, 6-8, 6-9, 6-10, 6-11	199-200-201-202-203-204 205	6-A	205
FORD	FEG-18806-G	Automobile Receiver	6-33, 6-34, 6-35, 6-36, 6-37, 6-38, 6-39, 6-40	241 to 245	6-J, 6-K	239
FORD	FEM-18805-A FEM-18805-B	Truck	6-21, 6-22, 6-23, 6-24	217 to 219	6-E	220
GE (GENERAL ELECTRIC)	675	Receiver	5-11, 5-12, 5-13	131-132-133	--	--
GE	P-715D	Receiver	5-30, 5-31, 5-32, 5-33	152-153-154-155	--	--
HEATH	DF-2	Radio Navigator	9-4, 9-5, 9-6	326-327-328	9-D	329
HEATH	PC-1	Power Converter	9-17, 9-18	347-348	--	--
HEATH	XR-1	Receiver	5-14, 5-15, 5-16, 5-17	134-135-136	--	--
KNIGHT (Allied Radio)	93 S 283	Audio Mixer	2-7, 2-8, 2-9	51-52-53	--	--
LAFAYETTE	KT-96	Power Amplifier	3-3, 3-4	72-73	--	--
LAFAYETTE	KT-104	Hi Fi Amplifier	3-10	80	--	--
LAFAYETTE	KT-117	Hi Fi Preamplifier	2-13	57	--	--
LAFAYETTE	SB-201 "Stereo-Bug"	Phonograph Oscillator	9-13, 9-14	341-342	--	--
LEL	Wrist Radio	Receiver	5-4	119	--	--
LINCOLN	FCC 15491-B	Automobile FM Tuner	6-25, 6-26	221-222	6-F, 6-G	223-224
MADISON-FIELDING	30 "Micamp"	Hi Fi Preamplifier	2-5, 2-6	50	--	--
MAGNAVOX	"50 Series"	Multi-band Receiver	5-42	168	5-C, 5-D	169-171
MAGNAVOX	CR-744	Receiver	5-21	143	--	--
MERCURY	FEW-18805-T	Automobile Receiver	6-29, 6-30, 6-31, 6-32	230 to 235	6-I	236
MOHAWK	"Midgetape"	Tape Recorder	9-41, 9-42	208	9-R, 9-S	389-390
MOHAWK	402	Booster Amplifier	9-43	388	--	--
MOPAR	851	Automobile Receiver	6-14, 6-15, 6-16, 6-17	208 to 212	6-C	213
MOTOROLA	78MF	Automobile Receiver	6-33, 6-34, 6-35, 6-36, 6-37, 6-38, 6-39, 6-40	237 to 245	6-J, 6-K	239-246
MOTOROLA	397X	Automobile	6-18, 6-19, 6-20	218-219-220	6-D	216

TABLE BB – CONTINUED ON NEXT PAGE

COMMERCIAL EQUIPMENT SERVICE DATA

TRADE NAME OR MANUFACTURER	MODEL NUMBER	TYPE OF EQUIPMENT	REFERENCE DATA			
			FIG. NOS.	PAGES	TABLES	PAGES
MOTOROLA	TK-74	Remote Control Transmitter	9-21	353	6-D	216
PHILCO	T-3	Receiver	5-5	120	--	--
PHILCO	T-9	Multi-band Receiver	5-43	172	5-E	177
PHILCO	TPA1 TPA2	Portable Phonograph	3-8, 3-9	78-79	--	--
RCA	1-BT-3	Receiver	5-40, 5-41	164-166	5-B	167
RCA	7-BT-9J	Receiver	5-22, 5-23, 5-24, 5-25	144 to 147	--	--
RCA	8-BT-10K	Receiver	5-35, 5-36, 5-37	157-158 159	--	--
RCA	9-TX-2	Receiver	5-38, 5-39	161-163	--	--
REGENCY (I.D.E.A., Inc.)	---	High Fidelity Preamplifier	2-10, 2-11 2-12	54-55-56	--	--
REGENCY	ATC-1	Amateur Band Converter	9-7, 9-8, 9-9	331-332 336	9-F, 9-G, 9-H	333-334 335
REGENCY	CD-2	Conel-rad Receiver	9-1, 9-2	319-320	9-A, 9-B	321-323
REGENCY	RC-103 "Tele Verter"	FM to TV Radio Converter	9-10, 9-11, 9-12	337-338	9-I, 9-J	339-340
REGENCY	TR-1G	Receiver	5-6, 5-7, 5-8, 5-9, 5-10	124-125-126-129-130	--	--
ROCKLAND	---	Radiophonograph	9-3	324	--	--
UNIVERSAL ATOMICS	750	Dosimeter Charge	9-39, 9-40	383-384	9-Q	384
UNIVERSAL ATOMICS	V-700	Survey Meter (Geiger Counter)	9-36, 9-37, 9-38	378-379-380	9-P	382
ZENITH	"Royal 1000"	Multi-band Receiver	5-44	175	5-F	179

TABLE BB – CONCLUDED

TECHNICAL DATA REFERENCE TABLE

INFORMATION NEEDED		REFER TO		
CLASS	TYPE	SECTION	FIG. or TABLES	PAGES
TRANSISTOR DATA	Amplifier Characteristics	10	10-5, 10-6, 10-G, 10-H	433-434 432-435
	Interchangeability	10	10-D, 10-E	426-427
	Lead Connections	10	10-C	422
	Manufacturers	10	10-F	431
	Outlines	10	10-C	422
	Parameter Definitions	10	10-A	412
	Specifications	10	10-B	415
	Symbols	10	10-1	440
	Test Techniques	1, 10	1-9, 1-10, 1-11, 10-2, 10-3, 10-4	11-12-13- 418-410- 411
COMPONENT DATA	Battery Specifications	10	10-I	438
	Battery Tests	1, 10	10-7	436
	Transformer Specifications	10	10-J	440
STATIC TEST TECHNIQUES	Current Measurements	1	1-8, 1-19	10-26
	Resistance Checks	1	1-19	26
	Voltage Measurements	1	1-19	26
	Visual Inspection	1	1-18	24
DYNAMIC TEST TECHNIQUES	"Brute Force"	1	1-25	34
	Circuit Disturbance	1	1-22, 1-23	30-31
	Signal Injection	1	1-22, 1-23	30-31
	Signal Tracing	1	1-20, 1-21	27-28
	Waveform Analysis	1, 10	1-12, 1-13, 10-8, 10-9, 10-10, 10-K, 10-11, 10-L, 10-M, 10-N	14-16 442-443 446-444 445-447 448
SPECIAL TEST TECHNIQUES	Sine-wave Tests	1, 10	1-23, 10-8, 10-9, 10-10, 10-K	31-442- 443-444
	Square-wave Tests	1, 3, 10	3-E, 10-8, 10-11, 10-L, 10-M, 10-N	96-442 446-445 447-448
	Substitution	1	1-14, 1-26	17-37
REPAIR METHODS	Alignment	1, 4, 5, 6, 7, 8, 9	1-17, 1-24	20-33
	Etched circuit repair	1, 10	1-3, 10-14, 10-15, 10-16, 10-17, 10-18, 10-19, 10-20	4- 452 to 459
	General	1	1-1, 1-2	2-3
	Heat Sinks	1, 10	10-12, 10-13	450-451

Table CC

Section 1

BASIC TEST PROCEDURES

TRANSISTORIZED equipment, in general, performs the same functions as does corresponding types of tube-operated gear. A transistor receiver, like a tube set, picks up, selects, amplifies and detects incoming radio signals. A transistorized phono amplifier, like a tube-operated unit, takes the weak audio signal delivered by a pick-up cartridge and amplifies it sufficiently to drive a loudspeaker. Both types of equipment use similar components . . . resistors, capacitors, coils, volume controls, and transformers. Finally, both types may be similar in external appearance, although transistorized gear is usually smaller and more compact. But with this the similarity ends.

Transistors are not like vacuum tubes. They are different mechanically, electrically, in their power requirements, and in their principle of operation. In a great majority of the cases, trouble in vacuum tube equipment is the result of a defective tube or tubes; secondary defects may be caused by tubes. In transistorized equipment, on the other hand, poor operation is seldom due to defective transistors, and these are the *last* components suspected.

The basic shop tools and test instruments needed for transistor work are similar, but not necessarily identical, to those used in tube equipment maintenance. In most cases, test instruments intended primarily for vacuum tube work can be used for troubleshooting transistor devices if the instruments' limitations are known; in a few instances, however, the technician needs equipment designed especially for transistor work.

Finally, familiar test techniques may fail if applied to transistorized equipment without modification, either by giving misleading results or by physically damaging transistors in the equipment under test. The author has seen top service men with years of vacuum tube experience stumped for hours by comparatively simple defects . . . not because they were using the wrong techniques or were faced with particularly tough "dogs," but because they were interpreting their test results in terms of their vacuum tube experience rather than in terms of transistor operation.

TOOLS. A high percentage of transistor-operated equipment is miniaturized; some units are *sub*-miniaturized, and approach a fine watch in complexity and in the size of components used. To repair such gear efficiently, the technician needs hand tools smaller than those used in general electronic maintenance.

The soldering tool should have a small, moderately long tip to permit the worker to reach and to solder (or unsolder) closely spaced connections without burning adjacent components. A standard soldering "gun" is excellent, but a miniature transformer-powered soldering iron with a one-eighth inch (or smaller) tip may be needed for work on sub-miniature equipment. Where the equipment uses Surface-Barrier transistors, a small A.C. leakage between a soldering iron's heating element and its shell or tip can damage the transistors. There is little danger of this where *transformer-type* soldering tools are employed, but if a standard (or "pencil") soldering iron is used, its shell should be grounded through a length of shielding braid. Soldering tools suitable for transistor work are illustrated in Fig. 1-1.

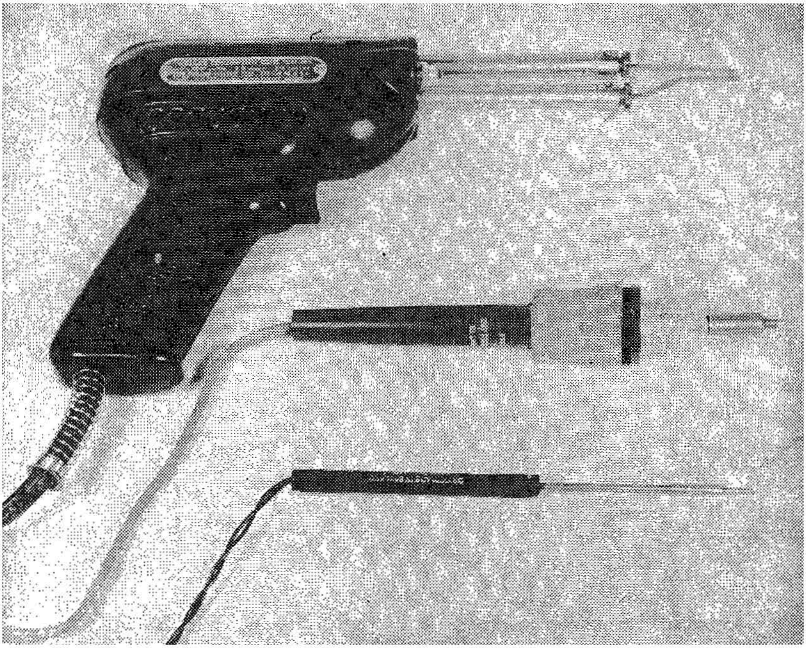

Fig. 1-1: A small soldering instrument is needed for working on the miniaturized circuits in which transistors are used. A soldering gun is satisfactory, as is a "pencil" type iron or a miniature soldering tool.

As far as hand tools are concerned, the basic units needed are a set of "jeweler's" screwdrivers and a pair each of miniature long-nose pliers and diagonal cutters. A specialist in sub-miniature work should have, in addition to these, miniature equivalents of most other hand tools, such as a small hammer, standard and duck-bill pliers, needle-nose pliers, a set of miniature wrenches, a set of small "Spin-tites," miniature punches and chisels, a set of Swiss files, and so on. Typical miniature tools are compared to a standard pair of long-nose pliers in Fig. 1-2.

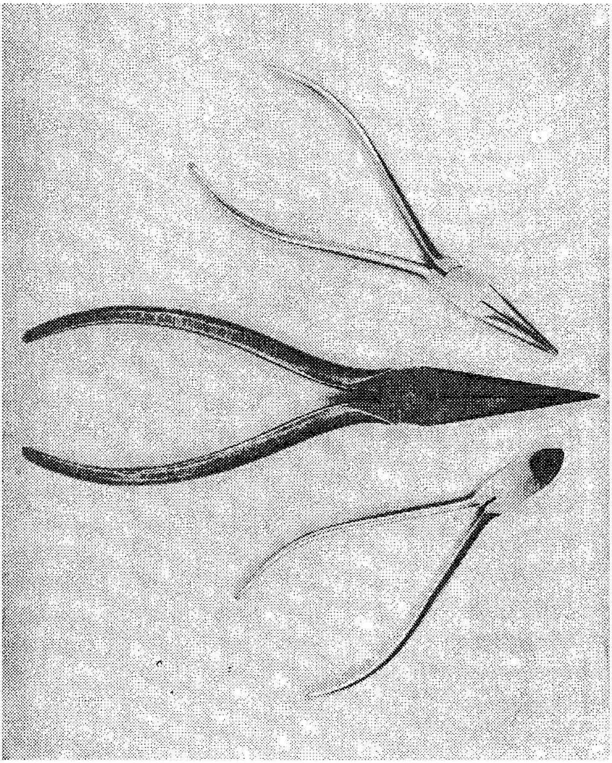

Fig. 1-2: You should have small "jeweler's type" hand tools for transistor work. Here, a standard sized pair of long-nose pliers is compared with miniature long-nosed pliers and diagonal cutters.

An extremely useful, but not absolutely essential tool, is a large illuminated bench magnifier . . . or, as a substitute, a fair-sized magnifying type "reading glass."

Today, etched and printed circuit boards are used extensively in the manufacture of all types of electronic equipment. Special tools, such as straight and curved probes, a wire brush, and a knife-edge scraper, are needed for the repair of these boards. These tools, along with a basic supply of such essential materials as low-melting point solder, non-corrosive flux, resin solvent, silicone resin, and conductive ink are available in *Printed Circuit Repair Kits;* one such kit is shown in Fig. 1-3. The physical techniques used to repair etched circuit boards are essentially the same whether the boards are found in transistor or tube-operated equipment; these are outlined in detail in Section 10.

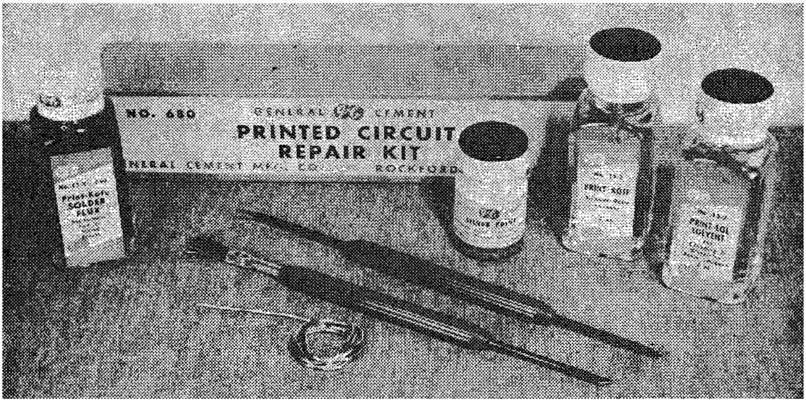

Fig. 1-3: Since etched circuit boards are used extensively in the manufacture of transistorized equipment, you should add a PRINTED CIRCUIT REPAIR KIT to your workshop. A General Cement kit is shown here.

TEST EQUIPMENT CONSIDERATIONS

With but few exceptions, the test instruments needed for transistor work corresponds to that used in servicing similar tube-operated equipment, although modified specifications may be desirable. A Tube Tester is not needed, of course, except for tests of "hybrid" equipment.* Let's examine basic test instruments in terms of transistor applications.

MULTITESTERS. The multi-range Volt-Ohm-Milliammeter (or Multitester) is an essential instrument. Although high sensitivity is not as important as in vacuum tube work, many equipment manufacturers specify voltage readings and other service data in terms of measurements made with 10,000 ohms/volt or 20,000 ohms/volt meters; hence, such instruments are preferred to less sensitive units (5,000 or 1,000 ohms/volt).

Most transistorized equipment is designed for battery operation,

---

*NOTE — "Hybrid" equipment uses *both* tubes *and* transistors.

requiring from 1.5 to about 22.5 volts. Aircraft and military equipment may be designed for 28 volt operation. Therefore, the Multitester should have adequate ranges for D.C. voltage measurements up to 30 volts. Two or three higher ranges (up to 1,000 volts) should be available. Corresponding A.C. ranges are needed for tests of line-operated equipment.

Current measurements are seldom made in day-to-day tube equipment servicing, and instruments designed specifically for such work may not have current ranges. In transistorized equipment, on the other hand, circuit currents may be more significant, if anything, than operating voltages. In some cases, circuit currents must be checked and bias adjustments made whenever a transistor is replaced. The currents encountered range from less than one milliamp to about half an amp (or 500 MA). Some equipment . . . high power audio amplifiers, servo amplifiers, radio modulators, power converters, and car radios, for example . . . may require currents up to several amperes. The Multitester, then, should permit D.C. measurements from less than a milliamp (MA) to about 500 MA, and, preferably, up to 12 or 15 amps.

Since resistance measurements are made frequently, and an Ohmmeter can be used to check transistors (see Section 10), the Multitester should have several Ohmmeter ranges, permitting accurate measurements from under 50 ohms to several megohms. To avoid transistor damage, however, the Ohmmeter should *use a series-type* rather than a shunt-type circuit. A number of older instruments use shunt-type circuits, particularly on their lower ranges. Generally, these can be identified by their mode of operation . . . the "zero" resistance reading is on the left-hand (instead of right-hand) side of the scale, with the needle swinging to a full-scale reading on an "infinite" resistance measurement. Finally, a low-voltage (3 volts) battery should be used.

VTVMs. As mentioned above, a high sensitivity instrument is not essential for most transistor work. Hence a Vacuum-Tube-Voltmeter (VTVM) is not as important for transistor servicing as it is for tube circuit tests. A VTVM may be needed for tests of industrial or laboratory equipment, however. Here, the ranges needed correspond to those desirable in a conventional Multitester, with emphasis on the low voltage ranges (from under 1.0 to about 30.0 volts).

Unless adequate precautions are taken, the use of a line-operated VTVM may damage transistors in equipment using Surface-Barrier transistors. These units are quite sensitive to transient voltage surges and may be burnt out by a relatively small static accumulation on line-powered instruments. To avoid damage, remove transistors before making tests, or, if this is impracticable due to the design of the equipment or the nature of the tests needed, "bond" the VTVM chassis and equipment ground to a *common* earth ground *prior* to turning the power "ON." Where junction transistors and related types are used, such precautions are less important.

For general transistor service work, a combination *battery-operated* VTVM and Volt-Ohm-Milliammeter will meet most test requirements. Such an instrument is shown in Fig. 1-5.

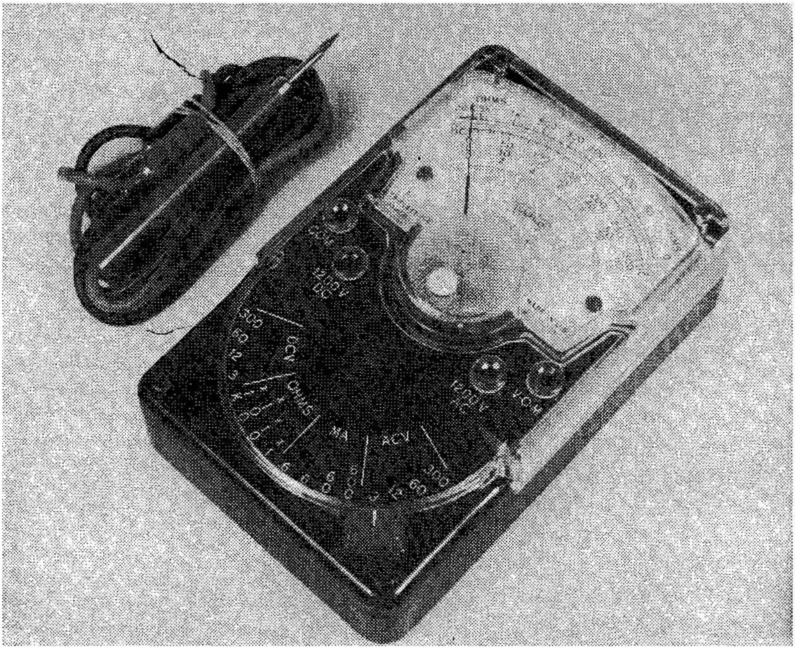

Fig. 1-4: A Multitester chosen for transistor work should include several low current ranges as well as the usual AC and DC Voltage and Ohmmeter ranges. The TRIPLETT instrument shown here is useful for both shop and field work.

SIGNAL GENERATORS. Supplying test signals of known frequency, waveshape, and easily controlled amplitude, Signal Generators are used for frequency response measurements, distortion analysis, Signal Injection tests, and Alignment. The type of Signal Generator needed and its general specifications depends more on the equipment serviced . . . radio receiver, TV set, audio amplifier, etc. . . . than on whether tubes or transistors are used.

For troubleshooting and aligning radio receivers, a standard R.F. Signal Generator is needed. It should be able to supply both modulated and unmodulated (CW) R.F. signals from 160 KC to 220 MC, and should have a low impedance output, with the signal level easily adjusted from close to zero to at least 25 millivolts. Preferably, the instrument should have a blocking capacitor in series with its output

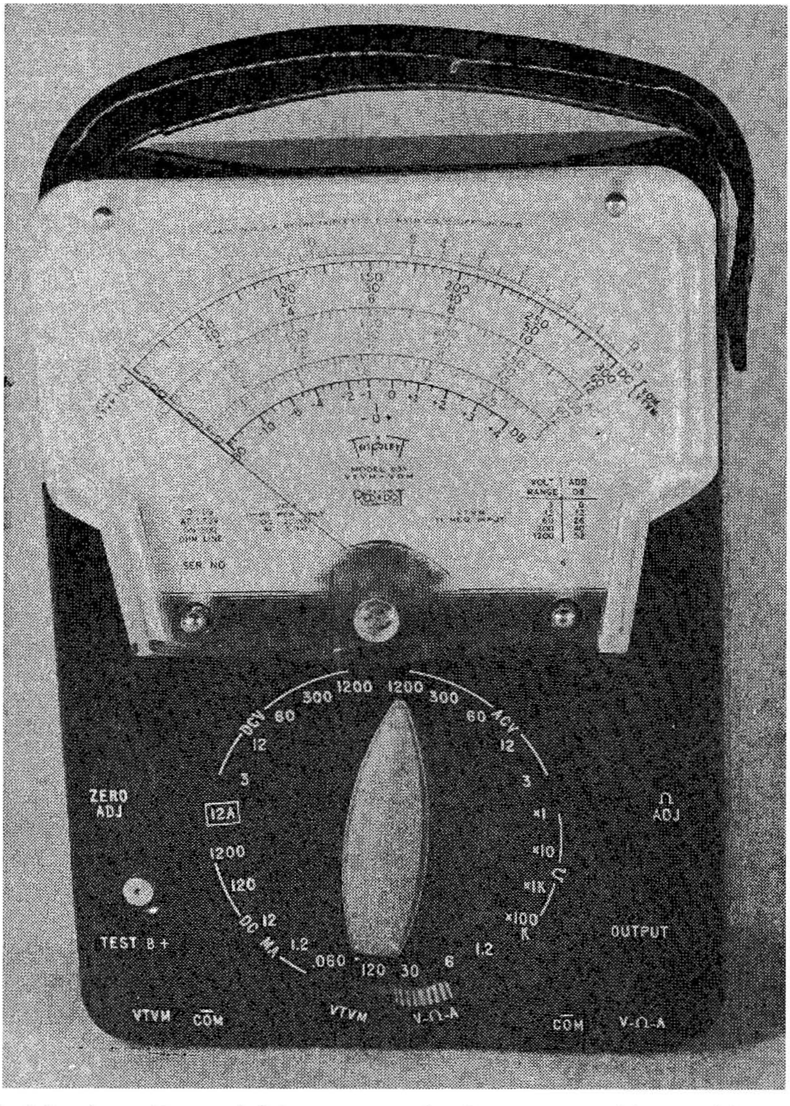

Fig. 1-5: A VTVM is needed for some tests, but is not as essential to servicing transistorized equipment as it is in the repair of vacuum tube operated gear. The TRIPLETT Model 631 is a combination VTVM-VOM and hence may be used for all types of tests.

terminal; this last point is not critical, however, for an external capacitor may be added when required.

An R.F. Sweep Generator covering approximately the same range (160 KC to 220 MC), and with a frequency deviation of 0 to about

1 MC is needed for the Alignment of some short-wave receivers (see Section 5), Hi-Fi Tuners, and, occasionally, for checks of FM sets.

Transistorized TV receivers are aligned and serviced with essentially the same instruments used in repairing tube-operated sets. Needed here are a TV Sweep Generator covering from 3 to 220 MC, with a sweep width of up to 12 MC, and a crystal calibrated Marker Generator covering approximately the same range; an R.F. Signal Generator may be used as a "marker" for most applications. In addition to these instruments, a Dot-Bar Generator is needed for linearity adjustments on B/W and convergence adjustments on color TV sets.

The Audio (Sine-Wave) Generator is used for Signal Injection tests, frequency response measurements, and distortion tests of Hearing Aids, phonographs, Hi-Fi systems, P.A. installations, intercoms, and other audio amplifiers, and can be valuable for servicing servo amplifiers. This instrument should supply good quality sine-wave signals from 20 cps to 100 KC with an accuracy of 5% (or better). It should have a low output impedance (600 ohms, or less), with its output level easily adjusted from under 1.0 millivolt to several volts.

A Square-Wave Generator is valuable for transient response tests, quick frequency response and phase shift checks, and for tests of the clipper, gate, flip-flop, pulse and counter circuits found in computers and industrial equipment. This instrument should supply square-wave signals with negligible tilt and overshoot, and with a rise-time of less than 0.1 micro-seconds, from 20 cps to at least 50 KC. Like the Sine-Wave Generator, it should have a low impedance output, with its output level easily controlled from zero to several volts.

In addition to the instruments discussed above, special Signal Generators may be needed for tests of computers and industrial or military equipment. Here, the type of Signal Generator required and its electrical specifications are generally outlined in the manufacturer's Service Manual. Typical special purpose Signal Generators are . . . Pulse Generators, Waveform Generators, UHF R.F. Signal Generators, and Ultrasonic Generators.

POWER SUPPLIES. Most transistorized equipment is designed for battery operation, requiring voltages of from 1.5 to about 20 volts, and currents from less than 1.0 MA to 5 or 10 amps. While *final* tests should always be made with the battery (or power pack) which the equipment is designed to use, a line-operated Power Supply is preferred for preliminary bench work. Using such a Power Supply, the technician can adjust supply voltages above and below the equipment's "normal" (battery) operating voltage; this may aid in the isolation of obscure circuit defects. For example, a slightly leaky component may be difficult to locate under normal conditions, but, when the supply voltage is raised, it will become "more leaky" and can be isolated quite easily. By the same token, a "borderline" oscillator may quit entirely if the supply voltage is dropped slightly, again permitting quick isolation of the defective stage.

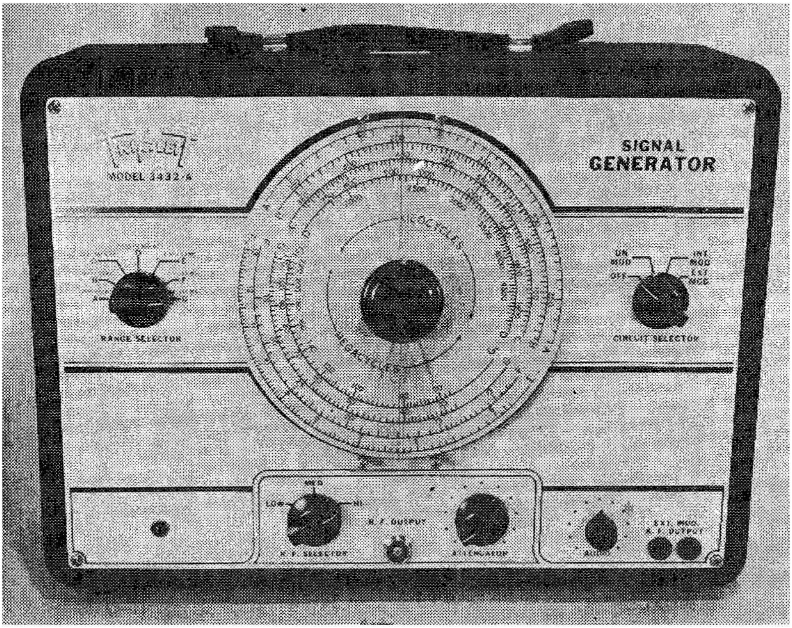

Fig. 1-6: As in other types of servicing, a general purpose R.F. Signal Generator is needed for the test and alignment of transistorized radio equipment.

For transistor work, the Power Supply should meet the following requirements: (a) current rating of at least 5 amperes, or up to 10 amperes on intermittent service, (b) output voltage easily adjusted from 0 to 20 volts, (c) ripple (hum) less than 0.5%, and (d) panel meters provided to indicate output voltage and current.

As a general rule, equipment using only small transistors requires *less* than 75.0 MA, while equipment using one or more multi-watt power transistors requires from half an amp to several amperes. Since a constant check of circuit current is desirable in many operations, a Power Supply designed specifically for transistor work should have *two* outputs . . . one metered for currents up to 75.0 MA, and the second metered for currents up to 10 amps. The instrument shown in Fig. 1-8 meets these basic specifications.

TRANSISTOR TESTERS. As high as 80% of the "troubles" encountered in tube-operated electronic equipment are due to defective

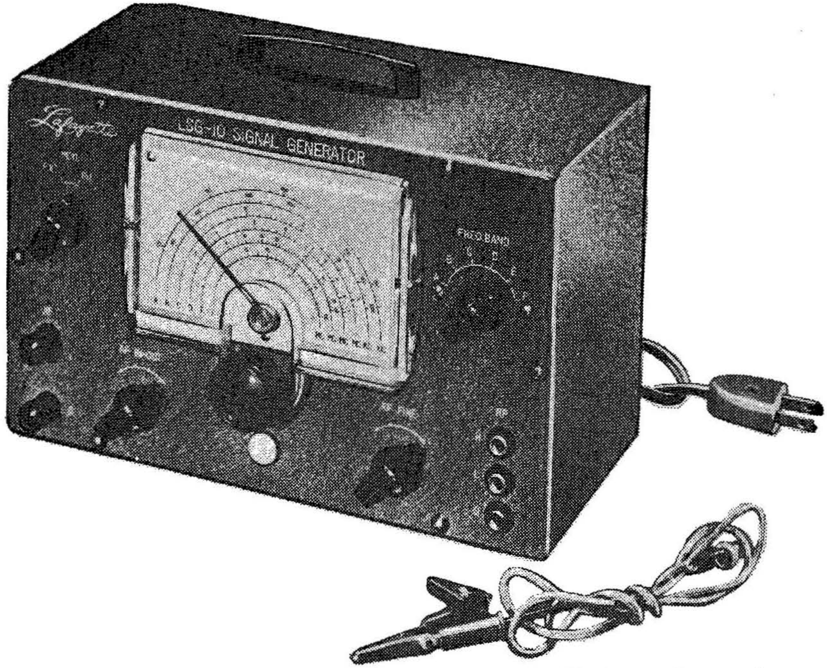

Fig. 1-7: Another type of R.F. Signal Generator suitable for transistor work.

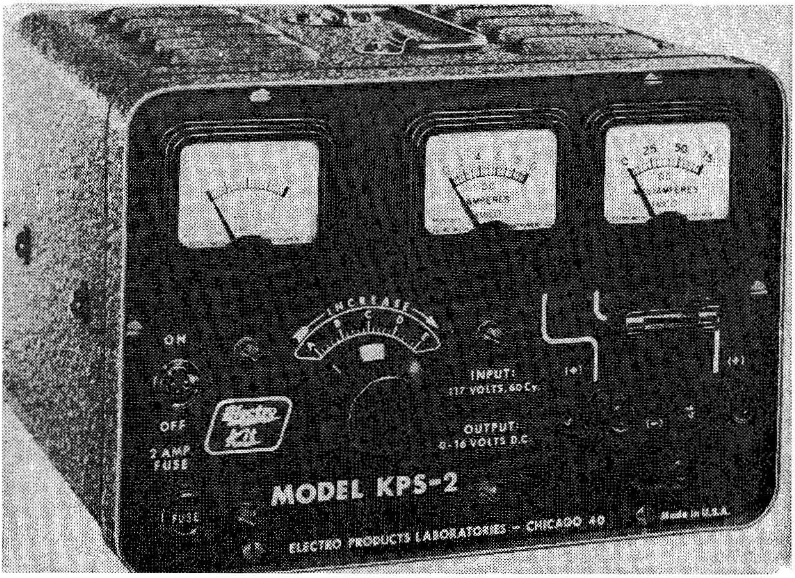

Fig. 1-8: A line-operated D.C. power supply or "battery eliminator" is valuable in transistor work. The unit shown here is suitable for servicing small receivers, preamps, and hearing aids as well as devices requiring high currents, such as car radios and transistorized P.A. systems.

tubes. Vacuum tubes may burn out, short, become leaky or gassy, lose emission, or change their electrical characteristics. Often, when a tube fails, some other component is damaged; a gassy or shorted tube, for example, may burn out a plate resistor or overheat a transformer. Since tubes *are expected to fail* after a certain amount of use, one of the first steps in servicing is to "check the tubes."

Transistors, diodes, and other semiconductor devices, on the other hand, should have a "service life" as long as any other component used in electronic equipment. They may be considered as permanent a part of the circuit as are resistors, capacitors, and coils, and, like these parts, often are wired permanently in place.

Transistor breakdown can occur, of course, and may be caused by poor circuit design, abuse (such as electrical overload, exposure to excessive operating temperatures, etc.), or latent defects in the component itself. No manufacturer has yet achieved 100% "reliability" for his products. Transistor defects include opens, internal shorts, high leakage, low gain, or an overall change in operating characteristics. When a transistor defect is suspected, the unit can be "checked" by substitution, by testing in a Transistor Tester, and, often, by a simple Ohmmeter test (see Section 10).

Commercial Transistor Testers are of three general types: (a) inexpensive units which provide a quick check for "leakage" and an approximation of gain, (b) more elaborate instruments roughly comparable to good quality Tube Testers, and (c) expensive laboratory-type Transistor Analyzers which permit an accurate check of the transistor's most important characteristics.

Typical low-cost Transistor Testers are shown in Fig. 1-9. Designed to check small transistors, these instruments apply a D.C.

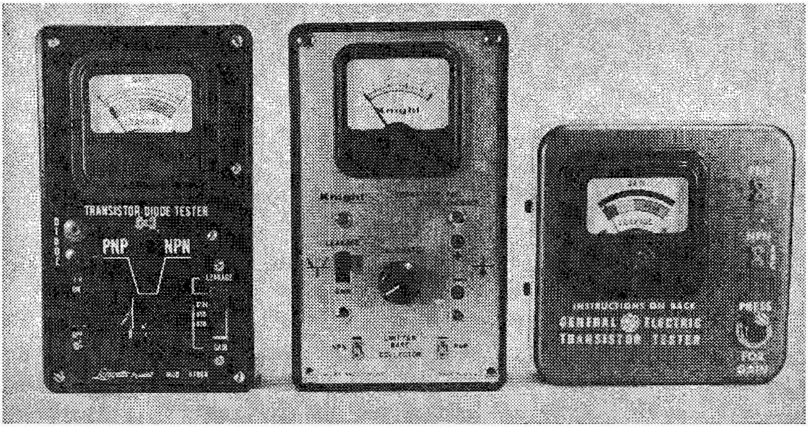

Fig. 1-9: Small low-power transistors may be given a quick qualitative check with any of the inexpensive Transistor Testers shown here.

voltage across one pair of electrodes (usually emitter and collector) and monitor the resulting current as a check for "leakage." A "gain" test is made by applying a fixed bias current to the transistor's third electrode (base) and noting the change in collector current. These instruments provide a rough qualitative check for transistors, and are useful for selecting similar types and "matched" pairs.

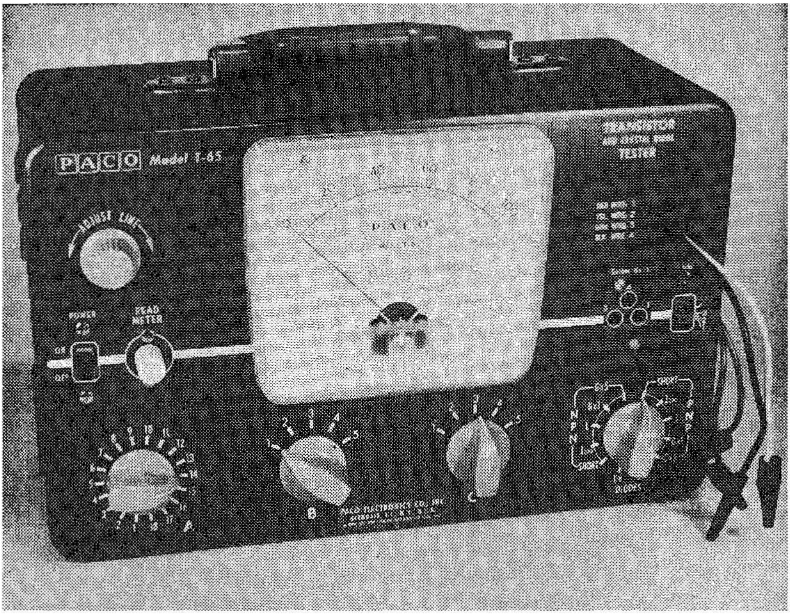

Fig. 1-10: For fairly extensive tests of both low-power and hi-power transistors, a more elaborate instrument is needed. The tester shown here, available in kit form, can be used to check diodes as well as all types of transistors.

A more elaborate instrument is shown in Fig. 1-10. Apparatus of this type is more versatile than the instruments shown in Fig. 1-9, and can handle multi-watt power transistors as well as low-power units. In addition, it provides a more accurate check of a transistor's characteristics.

For extremely accurate tests of transistor characteristics, a laboratory-type Transistor Analyzer is needed. Such an instrument is shown in Fig. 1-11. Ranging in cost from a few hundred to over a thousand dollars, depending on manufacturer and model, these instruments are not needed in routine service work. However, they are necessary for the service of industrial and commercial instruments, computers, precision controls, and similar equipment requiring accurate calibration or having stringent performance specifications.

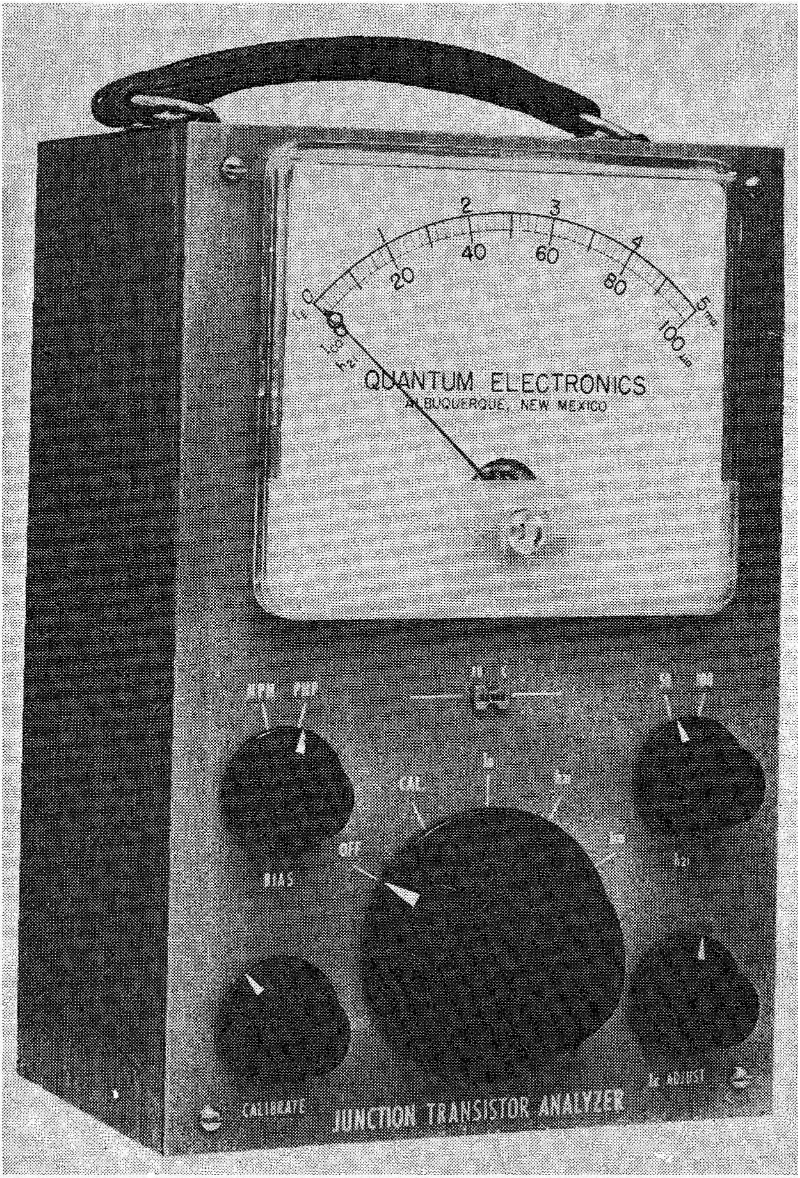

Fig. 1-11: If precise tests must be made, a laboratory-type Transistor Analyzer is needed. The instrument shown here is suitable for most work, and would be a valuable addition to the shop specializing in the maintenance of transistorized industrial controls and instrumentation.

OSCILLOSCOPES. One of the most versatile of test instruments, the Oscilloscope provides a graphical display of electrical signals. It may be used as a voltmeter, Signal Tracer, frequency comparator, or waveform analyzer, and is valuable for troubleshooting all types of electronic equipment. A 2″ or 3″ Oscilloscope (or, simply, 'Scope) is preferred for "field" tests, while a 5″ instrument is best for bench and shop work. The minimum performance specifications needed depend on the type of equipment tested.

Fig. 1-12: A good general-purpose Oscilloscope, while essential only for a few service jobs, is valuable for signal-tracing and waveform checks in transistorized instruments, TV sets, and similar gear.

If used primarily to service audio amplifiers, Hearing Aids, and similar equipment, the instrument's vertical amplifier should have a sensitivity of at least 0.1 volts/inch, with its frequency response flat within 3 db from 20 cps to 200 KC. A higher sensitivity may be needed for checking pickups and some types of preamplifiers. Its built-in horizontal sweep should cover from 20 cps to at least 40 KC.

Where a 'Scope is used for TV repair, its vertical amplifier should have a sensitivity of at least 1.0 volt/inch, with a frequency response flat within 6 db from 10 cps to 4.5 MC; again, a higher sensitivity may be needed for some tests. Calibrated vertical attenuators should be provided, or, in lieu of these, some other means of determining input signal amplitudes. The vertical amplifier should be able to handle a 60 cycle square-wave without tilt or distortion, and a 100 KC square-wave without excessive overshoot or rounding. The horizontal sweep should cover from 10 cps to at least 60 KC, with coverage to 100 KC desirable for Square-Wave Tests of video amplifiers or for pulse analysis.

Finally, where the 'Scope is used for servicing medical electronic equipment, test instruments, computers, controls, and similar apparatus, it should be equipped with a *direct-coupled* vertical amplifier reasonably flat from D.C. to 4.5 MC, and with a sensitivity of at least 0.25 volts/inch. The vertical attenuators should be calibrated in terms of volts/inch (or volts/CM). The horizontal sweep should be calibrated in terms of time/inch (or time/CM), and should be designed for repetitive and triggered ("slave") operation.

The Oscilloscope shown in Fig. 1-12 is designed for all-around service work, and features a unique "dual-range" vertical amplifier which can be used as a narrow band (10 cps to 200 KC), high gain unit for checking audio equipment or as a wide-band (10 cps to 4.5 MC) amplifier for TV and video service applications; also included is a built-in peak-to-peak Voltmeter for checking input signal amplitudes. The 'Scope shown in Fig. 1-13 is designed for laboratory applications, and is useful for servicing computers, medical electronic apparatus, and precision instruments and controls; it features calibrated direct-coupled amplifiers flat from D.C. to 4.5 MC, and is equipped with a calibrated horizontal sweep.

There are a number of special accessories available which increase a 'Scope's overall versatility. Included here are the Electronic Switch (used for observing two signals simultaneously), the Voltage Calibrator (which supplies a test signal of known amplitude), Low Capacity and R.F. Demodulator (Detector) Probes, and various Instrument Preamplifiers. Which of these accessory instruments are needed depends on the work handled and individual preferences.

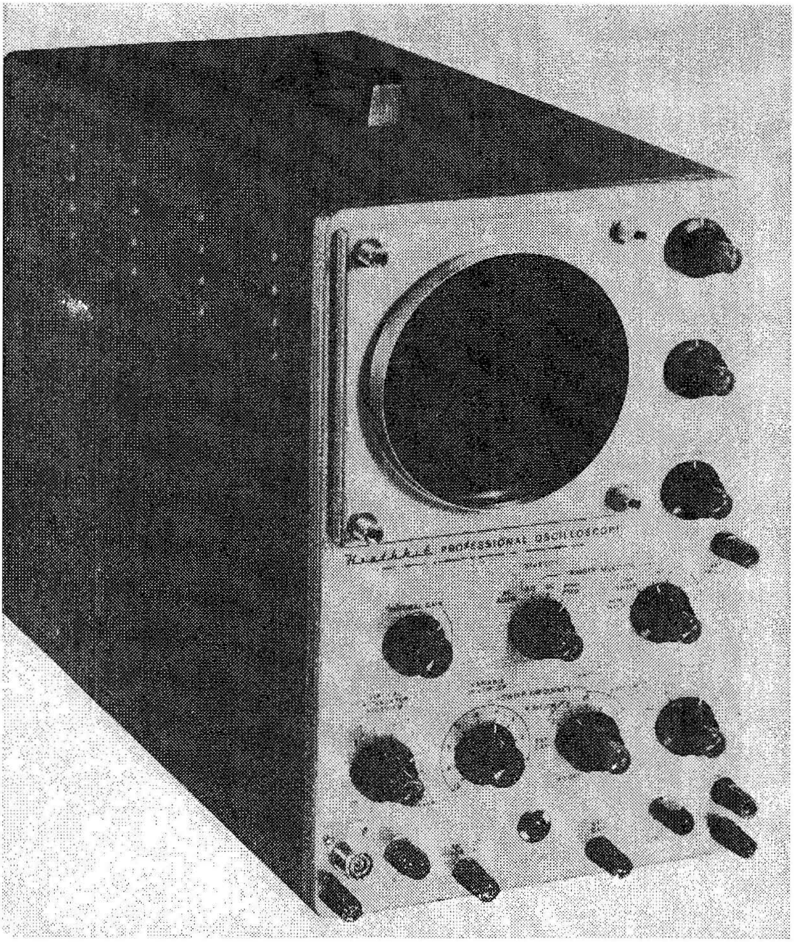

Fig. 1-13: If you specialize in servicing transistorized industrial controls, computers, medical electronic equipment, and related units, you'll need a professional type Laboratory Oscilloscope similar to the unit shown here.

OTHER TEST EQUIPMENT. In addition to the basic instruments discussed above, there are a number of units available which are designed for special applications. Included here are instruments intended for checking specific types of equipment as well as general-purpose units such as "substitution" type devices and component checkers.

Used primarily for troubleshooting radio receivers and audio amplifiers, the *Signal Tracer* is basically a high-gain audio amplifier equipped with calibrated input attenuators, an R.F. Detector Probe, and both audible (loudspeaker or earphone) and visual (tuning "eye" or meter) output indicators. In practice, this instrument is used to follow a signal stage-by-stage through a piece of equipment, and can be used to isolate noise, hum, and distortion, as well as "dead" and "weak" stages.

Several special instruments are needed for the proper maintenance of radio transmitters and related communications equipment. Aside from a suitable Communications Receiver, a Crystal Calibrator or Secondary Frequency Standard is needed for accurate frequency measurements. Either a Frequency Meter or Wavemeter may be used for quick frequency checks. A Grid-Dip Meter is valuable for checking tuned circuits in transmitters, matching networks, and receivers. Both the Reflected Power Meter and Antenna Impedance Bridge are used for adjusting and checking transmission lines and antenna systems. Finally, a Field Strength Meter is needed for checking the radiation pattern and relative power output of antennas.

The audio specialist needs an *A.C. VTVM* for checking the outputs of phono cartridges, microphones, and similar pickup devices, as well as signal levels in audio amplifiers. For power output tests, and Audio Wattmeter is needed; this instrument should be equipped with built-in loads of 4, 8, 16 and 500 (or 600) ohms. Distortion measurements may be made with an Audio Analyzer and a Harmonic Distortion Meter. Finally, a Sound Level Meter is needed for checking room acoustics prior to making an audio installation, and is valuable for balancing stereophonic systems.

For transistor work, Resistor and Condenser Substitution Boxes (see Fig. 1-14) are extremely valuable. Other "substitution" type

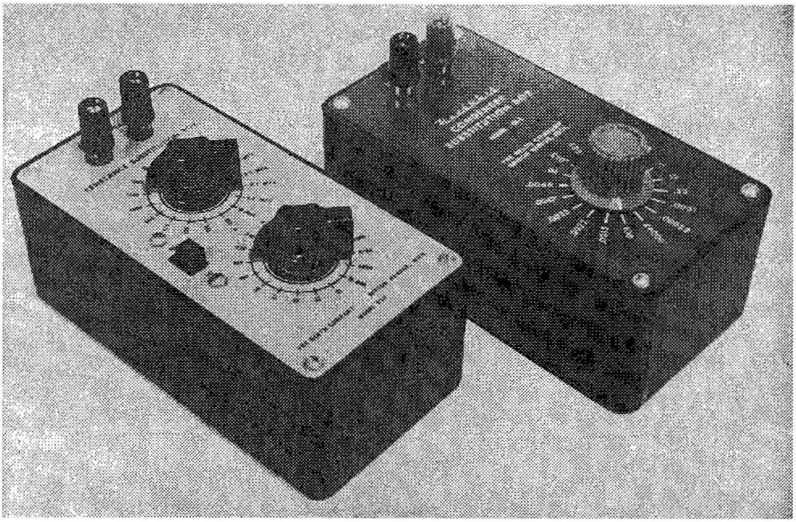

Fig. 1-14: Resistor and capacitor Substitution Boxes similar to the units shown are time-savers in repair work, and especially valuable for SUBSTITUTION tests.

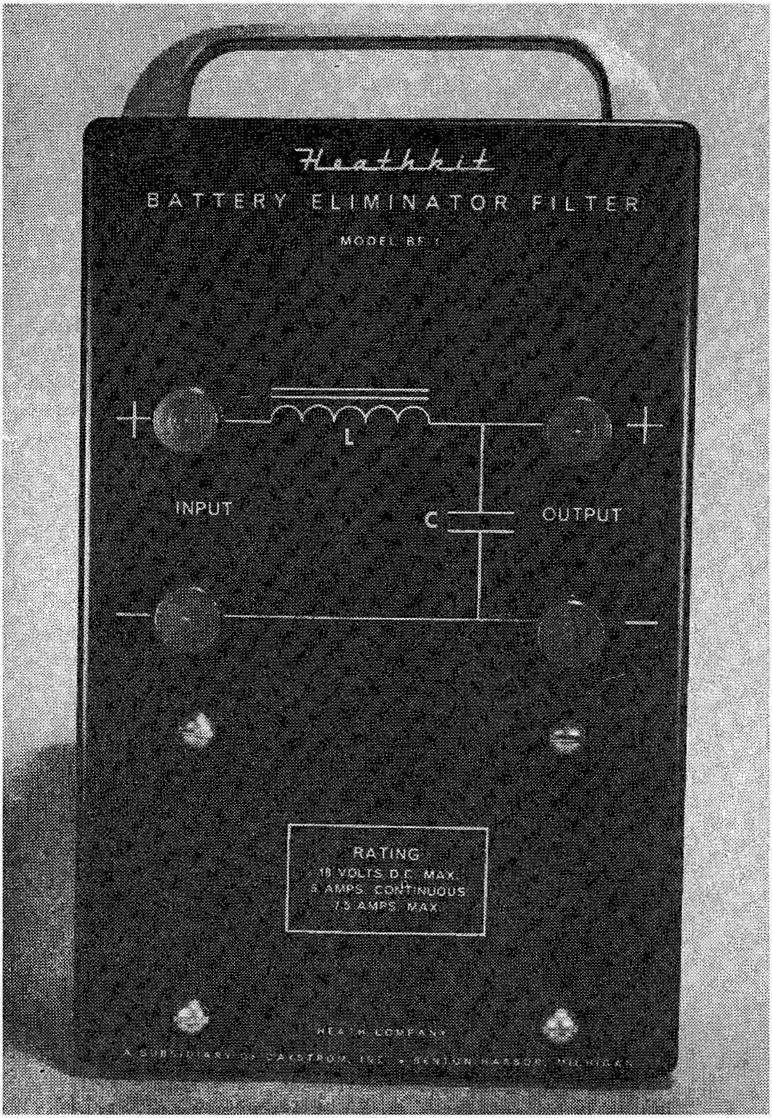

Fig. 1-15: An external Power Supply Filter, designed for use with line-operated Power Supplies, reduces ripple to a minimum for checking critical circuits and high-gain audio equipment.

devices which are great time-savers are the Test Loudspeaker, Decade Boxes, and, for TV work, the Test CRT. For industrial control servicing, computer repair, and similar work, a Zener Diode Substitution

Box (for example, International Rectifier's "Zeniac") is extremely useful.

While components may be checked by substitution or with other instruments, such as the Volt-Ohm-Milliammeter (VOM), specialized "component testers" may be needed where a large volume of service work is handled. Included here are the Capacitor-Resistor (C-R) Checker (see Fig. 1-16) and Battery Tester (see Section 10).

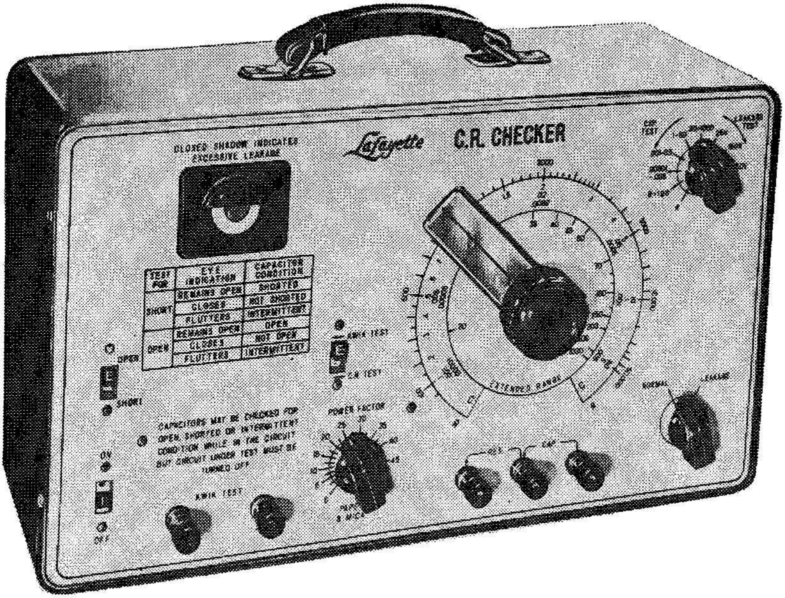

Fig. 1-16: A general-purpose C-R Checker will be found valuable in larger service shops.

For TV work, a CRT Tester-Rejuvenator and a Flyback Tester are useful. The Impedance Bridge and Q Meter are needed for advanced work and for the maintenance of precision control or communications equipment.

EQUIPMENT ANALYSIS

A composite block diagram which can be applied to virtually any type of transistorized electronic equipment is given in Fig. 1-17. This diagram is useful for basic equipment analysis, and may be used as a guide in selecting suitable test techniques. Each "block" in the diagram may represent one *or more* stages. The names used for identification in the illustration are arbitrary and will vary with the type of equipment studied, as indicated by the following examples.

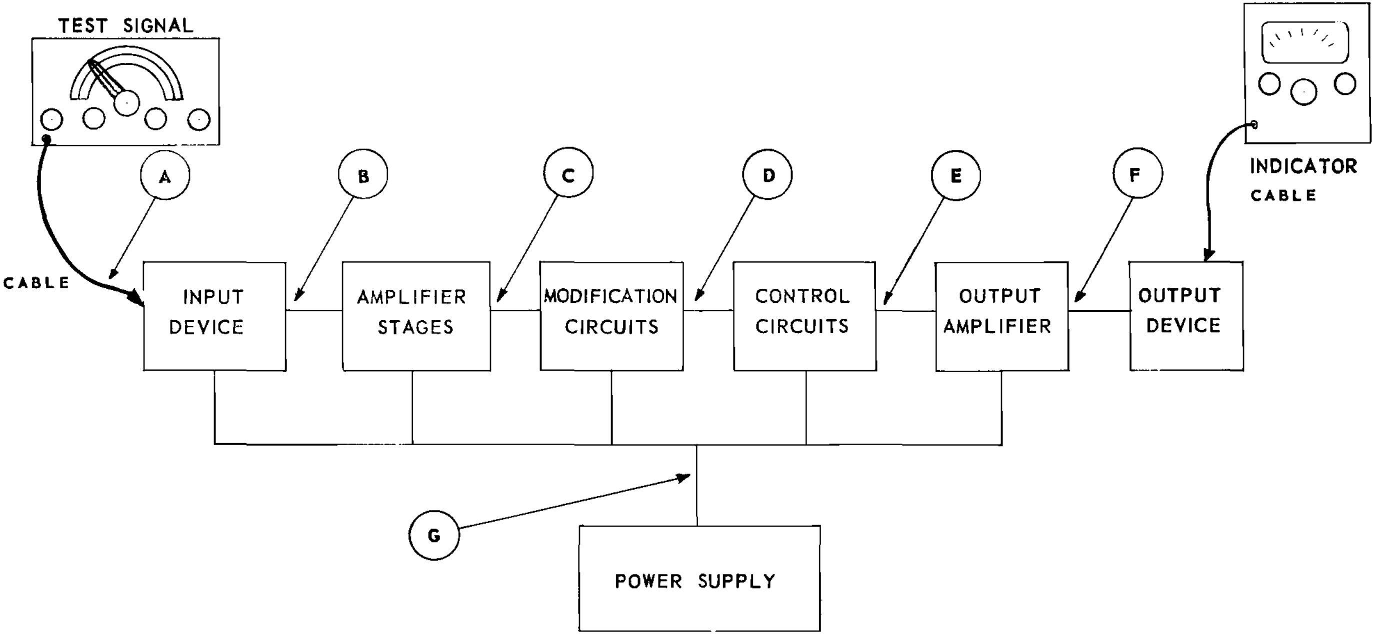

Fig. 1-17: This composite block diagram can be applied to almost any type of transistorized electronic equipment, and is valuable for determining servicing techniques and for isolating trouble.

In a Public Address Amplifier, the INPUT DEVICE becomes a *Microphone,* the AMPLIFIER STAGES are the *Preamplifier,* the MODIFICATION CIRCUITS are the *Tone Controls,* the CONTROL CIRCUITS are the *Gain* (or *Fader*) controls, the OUTPUT AMPLIFIER is the *Power Amplifier,* and the OUTPUT DEVICE is a *Loudspeaker.* The POWER SUPPLY, of course, may be a battery or a line-operated power pack.

In a Radio Receiver, the INPUT DEVICE becomes the *R.F. Front End,* which includes the antenna, R.F. amplifier, and converter. Continuing, the AMPLIFIER STAGES are the *I.F. Amplifiers,* the MODIFICATION CIRCUITS the *Second Detector,* the CONTROL CIRCUITS the *Volume* control, the OUTPUT AMPLIFIER the *Audio Section,* and, finally, the OUTPUT DEVICE is a *Loudspeaker* (or earphones).

In a Radio Transmitter, the INPUT DEVICE becomes the *Crystal Oscillator,* the AMPLIFIER STAGES the *Buffer Amplifier,* the MODIFICATION CIRCUITS the *Modulator,* the CONTROL CIRCUITS are the necessary *Impedance Matching Networks,* the OUTPUT AMPLIFIER is the *Final Amplifier,* and the OUTPUT DEVICE is the *Antenna.*

In a piece of Industrial Control Equipment, the INPUT DEVICE is a *Sensor* of some type, such as a thermistor, photoelectric cell, moisture detection plate, or Microswitch. The functions of the AMPLIFIER STAGES, MODIFICATION CIRCUITS, CONTROL CIRCUITS, and OUTPUT AMPLIFIER may be combined in a two or three stage *Direct-coupled Amplifier.* Finally, the OUTPUT DEVICE is generally an *Electromagnetic Relay* or, in some cases, a control *Motor.*

An analysis similar to the four given may be applied to any type of signal handling equipment. If the equipment is very complex, however, as in the case of TV sets and computers, it would be necessary to break down its circuitry in terms of several interconnected block diagrams, each similar to the one given in Fig. 1-17.

COMPLAINT-TO-CAUSE ANALYSIS. The service technician's most effective diagnostic tool is not his VOM, his 'Scope, nor his Signal Tracer, but his brain, coupled with his knowledge of circuit behavior. Often, he can eliminate many "possible" defects by a quick mental analysis of the complaint in terms of expected performance and equipment circuitry, and can reason *back* from the complaint to . . . (a) *where* the defect is *likely* to be, and (b) what *parts* are *probably* defective. This technique of *complaint-to-cause analysis* may be applied at every step of the service procedure. Let's see how it works in a typical service job.

THE EQUIPMENT – *a 6-transistor portable receiver.*
THE COMPLAINT – *distortion* (sound "garbled").

By applying complaint-to-cause analysis, we know immediately that the complaint is *not* due to such defects as "open" or "shorted" transistors, an "open" loudspeaker, or a "dead" battery, for any of these defects would "kill" the set. By simple mental analysis, then, and *without making a single test,* we have eliminated many possible defects. Further, we can be sure that the trouble is one which *changes* the operating characteristics of a stage, such as a changed value bias resistor, leaky capacitor, leaky transistor, or weak battery, for our knowledge of circuit behavior tells us that these are the defects which cause distortion.

Having come this far, we are ready for our first tests. Weak batteries are a common source of trouble – so we check the battery, either by using a Battery Tester or by installing a replacement. If the complaint is still present, we use a Signal Tracer, 'Scope, or similar instrument to check the output of the 2nd detector. If normal, we have eliminated the R.F. amplifier, converter, I.F. amplifier, and 2nd detector as possible sources of the trouble, and know that the defect is in the audio section.

For further isolation, the Signal Tracer is used to check, in turn, the input and output signals of the audio driver and power output stages. Let's say that all signals are normal *except* the output of the power stage. Fine! We have isolated the defect to a specific stage, and can again apply our *complaint-to-cause analysis.* Since distortion (the complaint) is the result of a change in operating characteristics (the cause), our next step is to check the stage's operating voltages (or currents). Suppose we find that base bias voltage is high, collector voltage low. This checks with our knowledge of transistor behavior, for a high bias voltage results in high collector current flow which, in turn, causes an increased voltage drop across the collector load, reducing collector voltage.

Examining the base circuit, we find that bias is supplied by a voltage divider made up of a series resistor and a "bleeder" resistor to circuit ground. A *decrease* in the value of the series resistor or an *increase* in the value of the bleeder will cause an increase in base bias. Turning off the set's power, we check both resistors with an Ohmmeter and find that the bleeder is "open." Replacement of this component clears up the complaint.

The complaint-to-cause analysis technique is made up of the following steps:

1) Analyze the complaint in terms of expected equipment performance.

2) Eliminate immediately *all defects* which *cannot* cause the specific complaint encountered.
3) Eliminate, too, those sections which are obviously operating normal.
4) Determine, by quick circuit analysis, what defects are *likely* to cause the complaint, and in which sections the defect is *probably* located.
5) Make preliminary tests of those sections to isolate the defect to an individual stage.
6) Analyze the test results, and make any final tests needed to isolate the trouble to a specific component(s).
7) Confirm these results by checking and/or replacing the suspected component.

In actual practice, complaint-to-cause analysis, when combined with professional test techniques, and used with the *Troubleshooting Charts* given in later Sections of this book, permits defects to be pinpointed in just a few minutes, except in the most stubborn cases. In the example given above, the total bench time required to isolate the defect (open bleeder resistor) may be *less than five minutes.*

PROFESSIONAL TEST TECHNIQUES

Regardless of the effectiveness of non-physical diagnostic techniques such as complaint-to-cause analysis and the use of Troubleshooting Charts, actual electrical or mechanical tests are necessary, both for isolation and for final confirmation of a defect, once found. Many test methods are available, of course, but, for practical discussion, they may be grouped into three general classes . . . *Static Tests, Dynamic Tests,* and, finally, a broad group of *Special Techniques.*

STATIC TESTS. In this group are tests which may be used *whether or not a signal is present.* Such tests are valuable for isolating defects which affect a circuit's operating conditions, such as open or shorted resistors and leaky or shorted capacitors. They are less useful for finding defects which affect *only the signal,* such as detuning and partially open capacitors. Frequently, these tests are used alone, but, more often, are used in conjunction with *Dynamic Tests,* and serve to isolate the defect to a specific component once the trouble has been isolated to a single stage.

A "mechanical" method requiring no instruments, *Visual Inspection* is perhaps the simplest yet, often, the most effective of all "tests." It is useful where the defect is partially mechanical or where the defect has caused physical damage, and consists of the following steps . . .

1) Inspect the equipment with the power "Off." Watch for charred insulation, burnt resistors or other components, bulging capacitors, open connections (as illustrated in Fig. 1-18), broken leads, melted wax, and obvious shorts.

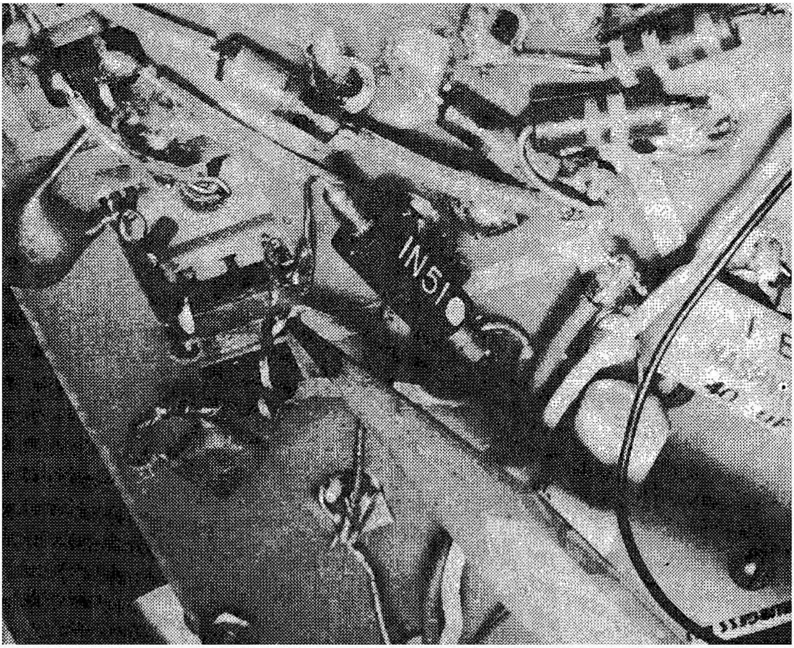

Fig. 1-18: VISUAL INSPECTION of the defective equipment often permits an immediate isolation of the defect. Here, the pencil points to an open connection in a small radio receiver... one lead of the 1N51 diode has broken loose from the I.F. transformer terminal.

2) With the power "On," reinspect the circuit. Watch for smoking components, arcing or sparking, etc.

3) Note any odors, such as may be caused, say, by overheated insulation.

4) Listen for "frying" or arcing sounds.

5) Lightly touch suspected components to see if they are overheated . . . but *don't touch* bare leads or terminals carrying high voltages.

Where sub-miniature equipment is checked, a bench magnifier or large reading glass is useful for Visual Inspection, and a small mirror is handy for checking the underside of components.

Point-to-point *Resistance Tests* are useful for isolating defects which cause a change in D.C. resistance values, such as open, shorted, or changed value resistors, shorted capacitors, and open coils or transformers. When servicing tube-operated equipment, Resistance Tests are made with the tubes still in their sockets. A modified technique is needed for checking transistorized equipment to avoid misleading results, *for there is a direct resistive connection between a transistor's various electrodes.* To make Resistance Tests, then, use the following technique:

1) Turn the equipment "Off."
2) Discharge any large filter or by-pass capacitors, using a short piece of hook-up wire or a clip lead.
3) Remove the transistors, if sockets are used. If soldered in place, remove the transistors *only* from the stages to be checked.
4) Using an Ohmmeter, measure the D.C. resistances between each transistor's electrode connection points (each socket pin, for example, if sockets are used) and either circuit ground or the common power connection.
5) Compare the readings obtained with those given in the equipment's Service Manual or expected from an inspection of the schematic diagram.
6) Ignore minor differences between the "actual" and "expected" values. Major differences indicate trouble.

D.C. *Voltage Analysis* is perhaps the oldest of all test techniques, and is valuable for isolating defects which cause a change in the equipment's operating voltages. A leaky transistor, for example, draws considerably more current than normal; this results in a larger voltage drop across its load, decreasing its collector voltage.

To avoid misleading results, it is necessary to make several modifications in the Voltage Analysis technique as used in vacuum tube work. In tube circuits, for example, it is customary to connect the negative side of the power supply to circuit ground. In transistor work, *either the positive or the negative side* of the power source may be "grounded," depending on whether *PNP* or *NPN* transistors are used and on the circuit arrangement employed. Further, in tube circuitry, D.C. voltages are reasonably high, ranging from a half-volt to several hundred volts; even the "low" half-volt value is easy to spot on, say, a 5-volt scale. In transistor circuits, operating voltages are much lower, and base bias voltages, in some cases, may be *well under a tenth of a volt.* A value this low causes very little needle deflection on the 5-volt or 10-volt scale of the average D.C. Voltmeter. Unless you are aware of this, your reaction might be . . . "Oops, no bias" . . . when, in fact, a stage has normal bias and is operating properly

To use the Voltage Analysis technique:

1) Turn the equipment "On," and adjust any controls for normal operation.
2) Using a D.C. Voltmeter, check voltages between each transistor's electrodes and circuit "ground," taking care to observe correct polarity. See Fig. 1-19.

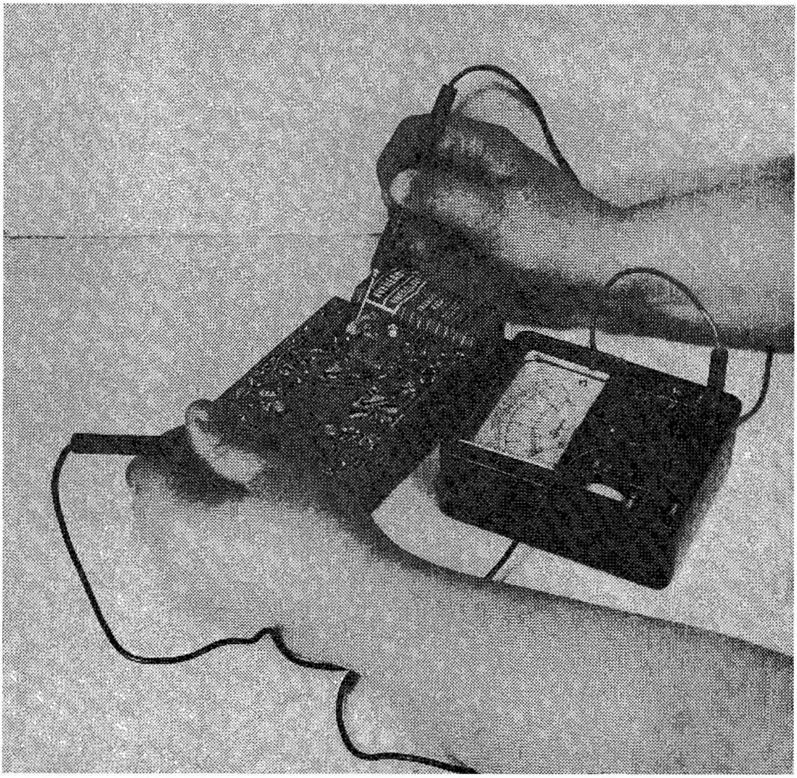

Fig. 1-19: A multirange Volt-Ohm-Milliammeter or Multitester is used for both RESISTANCE and VOLTAGE (or CURRENT) tests.

3) Compare the readings obtained with those specified in the equipment's Service Manual or expected in the type of circuit checked.
4) Major discrepancies between "actual" and "expected" values indicate trouble in the stage tested.

Generally speaking, transistor operating currents are more important in determining operation than electrode voltages. Because of this, *Current Tests* may be used in lieu of Voltage Analysis for locating obscure troubles or for checking precision control devices and instruments. These tests are made in much the same way as voltage measurements, except that a Milliammeter (or Microammeter) is used, and the circuit connection must be opened, with the meter inserted *in series* between the power source and the transistor's electrodes. Current Tests are less popular than Voltage Analysis, however; first, because the circuit must be opened for meter insertion . . . this can be quite time-consuming . . . and, second, because relatively few equipment manufacturers provide typical current data in their Service Manuals.

An *overall* Current Test may be made as a check on equipment efficiency, and is often recommended by equipment manufacturers. Here, the meter is inserted in series with one of the power supply (or battery) leads. An 0-10, 0-50, or 0-100 Milliammeter is used for checking the currents of small receivers, Hearing Aids, and amplifiers, while an 0-10 or 0-20 Ammeter is needed for checking the currents of car radios, high power P.A. amplifiers, and power converters.

DYNAMIC TESTS. In this group are equipment tests made under *actual operating conditions.* These tests may be used to isolate *all types* of troubles, including not only serious component defects causing a major change in equipment operation, but minor defects which affect circuit efficiency and performance, but permit "nearly normal"

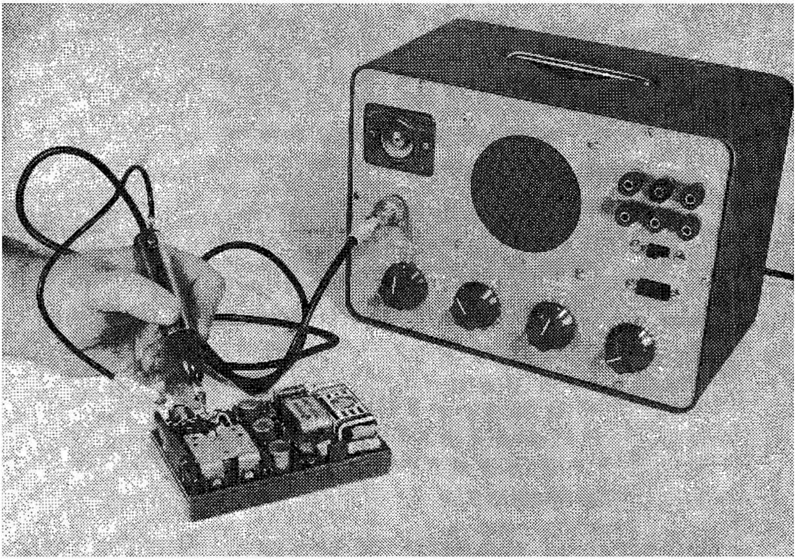

Fig. 1-20: Using a Signal Tracer to check the performance of a small transistorized receiver.

operation. Dynamic Tests are also valuable for tracking down that bugaboo of the service man, the "intermittent" defect.

Signal Tracing is, perhaps, the most powerful of the Dynamic Test techniques and, as the name implies, involves "tracing" a signal stage-by-stage as it passes through the equipment. The instrument used to follow the signal may be an A.C. Voltmeter, a Signal Tracer, or an Oscilloscope. Generally, a Signal Tracer is used to follow signals through receivers and audio amplifiers (see Fig. 1-20), while an Oscilloscope is used when servicing audio or servo amplifiers (see Fig. 1-21), computers, instruments, industrial controls, or other equipment. But a 'Scope can be used to check receivers if equipped with an R.F. Demodulator Probe.

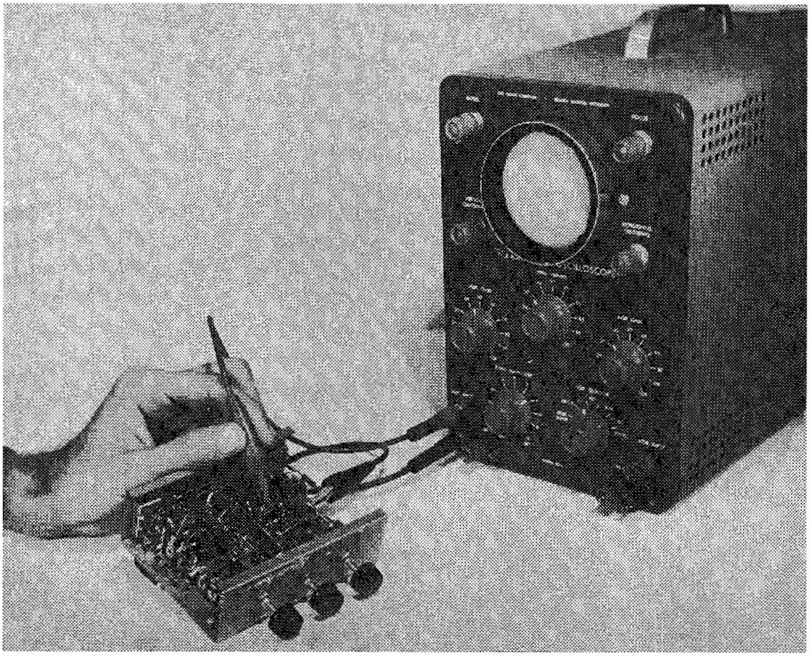

Fig. 1-21: An Oscilloscope may be used for SIGNAL TRACING in many types of equipment. Here tests are being made on a small preamplifier.

Refer to the composite block diagram given in Fig. 1-17. To use the Signal Tracing technique:

1) Turn the equipment "On."
2) Apply an adequate test signal to the equipment's *input*. In a receiver, this signal may be obtained from an R.F. Signal Generator or by tuning in a local station. In an audio am-

plifier, this signal may be obtained from a record player, Tuner, or Audio Generator. In other cases, depending on the equipment tested, the signal may be obtained from a Pulse Generator, Square-Wave Generator, saw-tooth oscillator, or other device. If the equipment generates its own signal . . . as in a radio transmitter, for example . . . a separate signal source is not needed.

3) Make sure the connection of the signal source does not disturb the circuit . . . where necessary, insert a D.C. blocking capacitor in series with the "input" lead.
4) Make sure that the test signal does not *overload* the equipment . . . use the minimum signal needed for useable output
5) Use a signal tracing instrument (Signal Tracer, 'Scope, etc.) to check the relative amplitude and quality of the signal at the *input* and *output* of *each stage* . . . in Fig. 1-17, at points Ⓐ, Ⓑ, Ⓒ, Ⓓ, Ⓔ and Ⓕ. Depending on the instrument used, the signal may be . . . (a) heard in a loudspeaker, (b) observed as the closure of a "tuning eye," (c) indicated by the deflection of a meter needle, or (d) seen as a pattern on the screen of a CRT.
6) The test signal should be modified by each stage. In the case of an amplifier stage, for example, the signal should be *increased* in amplitude. In a clipper stage, a portion of the signal may be removed or "clipped" off.
7) If the signal is changed in an *unexpected* fashion . . . for instance, if amplitude *drops* when it passes through an amplifier stage . . . trouble is indicated, and the defective stage has been isolated.
8) Where necessary, change the type of pick-up (or Probe) as the signal is followed through the equipment. For example, an R.F. Detector Probe is used for checking the R.F. and I.F. stages of a receiver, a Direct Probe in the audio section.

In addition to isolating a defective stage, the Signal Tracing technique may be used for other jobs. An open coupling capacitor may be identified by comparing signal amplitudes on each side of the unit. An open bypass may be found by checking across it for the presence of a signal. Stage gain may be measured by comparing the relative amplitudes of its "input" and "output" signals, taking circuit impedances into account. And undesired signals . . . hum, noise, interference, oscillation, etc. . . . may be tracked down and identified.

Waveform Analysis is a specialized technique corollary to Signal Tracing. Its primary application is in detecting minor (rather than major) changes in equipment performance . . . a deterioration in frequency response characteristics, for example. Here, an Oscilloscope is used. The test signal may be a sine-wave, square-wave, pulse, an AM or FM R.F. carrier, or other signal, depending on the equipment. To use this technique, apply a test signal of *accurately known characteristics* and, using a 'Scope, observe the signal *waveform* at the "input" and "output" of each stage. Changes in the signal waveform are indicative of stage operation; a "rounding" of a square-wave or pulse signal, for example, indicates a falling off of an amplifier's high frequency response. See Section 10 for a detailed discussion of Sine-Wave and Square-Wave analysis techniques.

Signal Injection is the second of the Dynamic Test techniques. It is complementary to Signal Tracing and is almost as powerful for tracking down trouble; in some equipment, it is even more effective. As the name indicates, this technique involves "injecting" a test signal into the equipment. Refer to Fig. 1-17. To use the Signal Injection technique:

1) Connect an "INDICATOR" to the equipment's output stage. This may be an A.C. Voltmeter, Oscilloscope, or even the equipment's own OUTPUT DEVICE (loudspeaker, meter, or earphones).
2) Turn the equipment "On."
3) Apply an appropriate test signal to the "input" of the *output stage* (point Ⓔ, Fig. 17). The test signal may be obtained from an R.F. Signal Generator when checking the I.F. and R.F. stages of radio receivers (see Fig. 1-22), from an

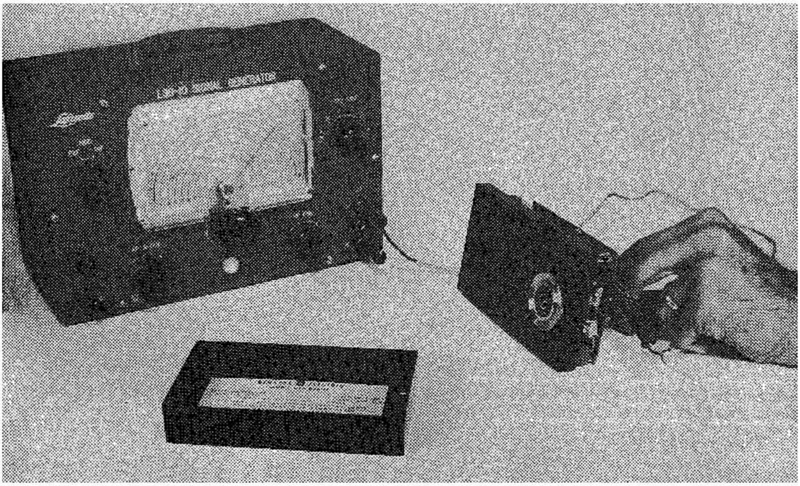

Fig. 1-22: Using a Signal Generator to carry out SIGNAL INJECTION tests.

Audio Generator when checking the audio sections of receivers, P.A. amplifiers, Hi-Fi gear, and similar equipment (see Fig. 1-23), or from a Pulse or Square-Wave Generator when testing computers, counters, or other types of equipment.

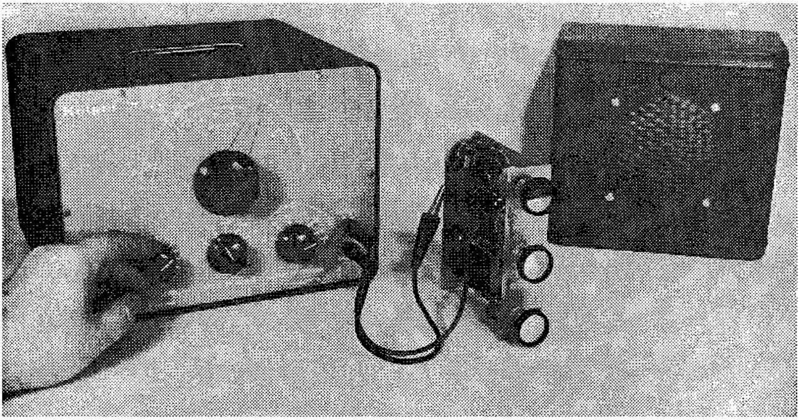

Fig. 1-23: An Audio Generator is used for SIGNAL INJECTION tests of P.A., Hi-Fi, and other audio equipment, and is also useful for frequency response and distortion measurements.

4) Make sure that the connection of the signal source does not change the normal operation of the stage; use a small coupling capacitor in series with the input lead if necessary.
5) Adjust the input signal level to the *minimum* signal needed for a normal output indication; later, readjust this signal level as necessary to prevent overload. Do this by adjusting the Signal Generator's *Attenuator* control.
6) Transfer the signal injection point *back,* stage-by-stage, from the equipment's output stage (point Ⓔ, Fig. 1-17) to its input (point Ⓐ, Fig. 1-17).
7) Change to a different type of test signal where necessary. For example, an audio signal is used in the audio stages of a receiver . . . a modulated R.F. signal at the I.F. frequency in the I.F. and converter stages, and a modulated R.F. signal at the set's R.F. frequency in the converter, R.F., and antenna stages.
8) Note changes in the equipment's output, as shown on the INDICATOR. Normally, output level will go *up* as the signal injection point is transferred back, requiring readjustment of the Signal Generator's *Attenuator.*
9) Unexpected changes in the equipment's output signal indicate that the defective stage has been isolated. In the case of a

"dead" stage, for example, the output signal will drop to zero when the injection point is shifted from the "output" to the "input" side of the stage.

Like Signal Tracing, the Signal Injection technique may be used for other jobs. An open coupling capacitor may be identified by comparing the output levels obtained as the test signal is injected on each side of the unit . . . a sudden drop in output indicates an "open" unit. Stage gain may be approximated by noting the Signal Generator *Attenuator* setting needed to maintain a *constant* output level as the injection point is transferred from the stage's "output" to its "input" side.

Frequently, Signal Tracing and Signal Injection techniques are combined for tests of a single stage or section. For example, referring to Fig. 1-17, a test signal might be injected at point Ⓑ, with a 'Scope or other instrument used to observe the signal at point Ⓒ, thus providing a check of the AMPLIFIER STAGES alone.

The *Circuit Disturbance Test* is a modified form of the Signal Injection technique. Here, a random noise pulse is used as a test signal. Its primary application is in the isolation of a "dead" stage in a receiver or audio amplifier. It is of limited value for the isolation of more obscure troubles. In vacuum tube service work, this test is applied by momentarily touching the grid terminals (or by removing and replacing a grid top cap) of individual tubes, starting with the output stage, and working back toward the equipment's "front end." The technician listens for a click, hum, or noise in the equipment's loudspeaker. When he first fails to obtain a signal as he "disturbs" a particular stage, he has isolated the dead stage.

A somewhat similar technique may be used in transistor work, but is *much less effective* due to the low input impedance of transistor amplifiers. And care must be taken that this test is *not used* where a pulse is likely to cause damage. Surface-Barrier transistors, for example, are quite sensitive to transients, and may be ruined by pulses of excessive amplitude.

Perhaps the most difficult of all service jobs are those involving "intermittent" troubles. The equipment works properly for a while, then develops trouble; the trouble is not permanent, but disappears temporarily, with the equipment operating normally in the interim. The "intermittent" trouble may be any of the common complaints . . . the equipment may be intermittently *dead, weak, distorted,* or *noisy,* or may break into *oscillation* at intervals. If the trouble is present for long enough periods, the defect can be isolated using conventional techniques. Unfortunately, most equipment seems to have an innate "stubborn" streak and, when placed on the workbench, decides to "behave." Since it is almost impossible to "troubleshoot" equipment which is working properly, the technician is faced with the choice of waiting . . . perhaps for an indefinite period . . . until the trouble recurs "on its own," or of trying to stimulate the defect. It is for this last job that the third Dynamic Test technique is used. The *"Brute Force"* method is a "mechanical" technique especially suited to troubleshooting intermittent defects. To use it . . .

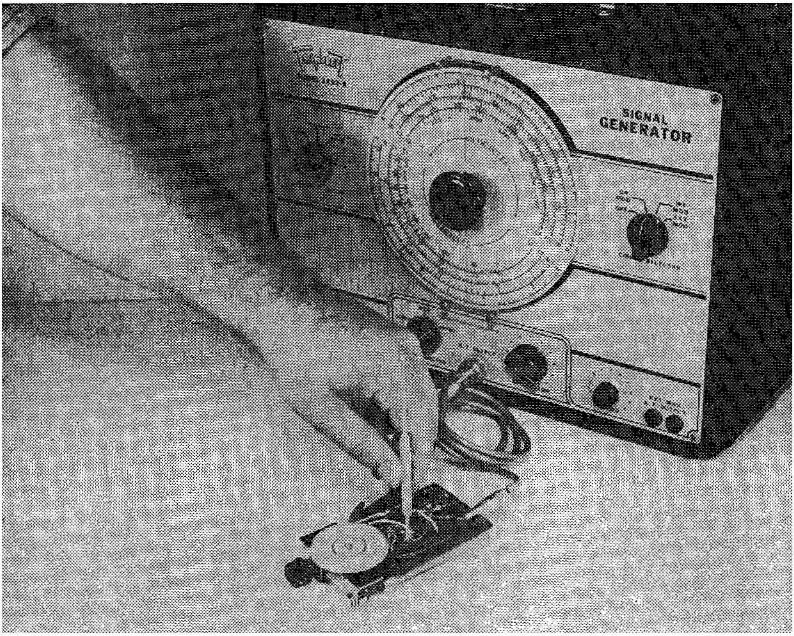

Fig. 1-24: Using a Signal Generator to ALIGN a transistorized pocket radio.

1) Turn the equipment "On."
2) Make any control adjustments necessary for normal operation.
3) Using a pair of plastic tweezers, plastic pliers, or similar insulated tool, carefully wiggle and move each part and connection. See Fig. 1-25. Take care not to short adjacent wires or to apply so much leverage as to break a connection.
4) If you can cause the intermittent complaint to "come and go" as you move a particular part or connection, you have isolated the defect.
5) An intermittent part, such as a resistor, coil, or capacitor, should be replaced. An intermittent or loose connection is resoldered. If the intermittent is due to poor contact in a socket or jack, the contact surfaces should be cleaned and the contact springs tightened.

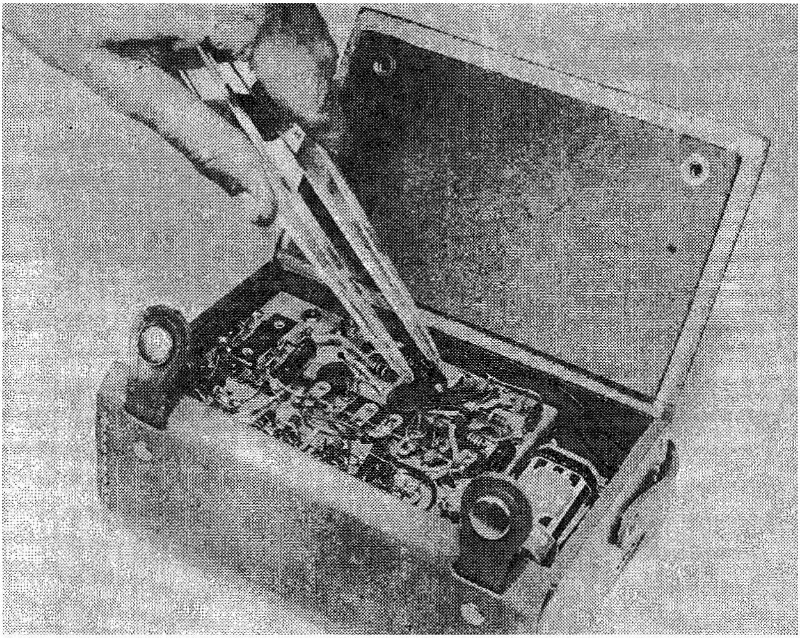

Fig. 1-25: An example of the "BRUTE FORCE" test method. Here, a pair of plastic tweezers is used to move components in order to isolate an intermittent connection or part.

A variation of the "Brute Force" technique is used for isolating *microphonic* components. Here, the rubber eraser end of a pencil is used to *lightly tap* suspected components until the microphonic part (or connection) is found.

Occasionally, an intermittent complaint will involve temperature sensitivity . . . for example, "the set works fine on cool days, but the sound is garbled on hot days." Where this is the case, it is necessary to duplicate the operating conditions causing the defect for proper isolation. Equipment may be *warmed* above room temperature by placing it under a large cardboard box, together with, ***but not next to,*** a small (40-60 watt) lighted lamp bulb. Insert a thermometer through a small hole in the box to keep a constant check on temperature, and *do not allow the temperature to rise above the maximum specified for the transistors used in the equipment under test.* At the opposite extreme, equipment may be *cooled* below room temperature by placing it in a refrigerator for a few minutes.

SPECIAL TECHNIQUES. While other test techniques are available, a majority of these require specialized test instruments or are suitable only for certain types of equipment or specific defects. There are three techniques which have wide application, however. These are: *Alignment, Substitution Tests,* and various *Component Tests.* Of these, Alignment is more a "repair method" than a test technique, but, often, must be used in lieu of actual tests.

In general, any equipment using a number of *fixed tuned* stages will require Alignment . . . for example, AM and FM radio receivers, TV sets, tuned amplifiers, and some radio transmitters. In a few cases, the equipment may be aligned by the manufacturer, and may never require realignment during its service life; here, the tuning adjustments may be sealed. More often, however, the equipment will have to be realigned from time to time . . . either when components are replaced, after the parts have "aged" for a few months (or years), or when the equipment is subjected to extreme environmental conditions.

A shift in Alignment may cause a number of service complaints. In receivers, these complaints range from *dead, weak,* or *noisy* to *poor tracking, oscillation* (squealing or motorboating), or *poor selectivity* (interference). In TV sets, misalignment may cause the picture to be *smeared* or *blurred,* may cause *tearing* or *rolling* (poor sync), *poor contrast* or *snow* (low sensitivity), and *streaks* or *hash* (oscillation); in the audio section, poor Alignment may cause *weak operation, noise, buzz, squealing,* or *distortion.* In radio transmitters, misalignment may cause a *shift in output frequency, lowered efficiency* stances, incorrect adjustment of a transmitter's tuned circuits may (with a drop in power output), or *parasitic oscillations;* in some in- result in physical damage to circuit components. Misalignment of instrument or control circuits may result in *poor sensitivity, erratic operation,* or *inaccurate calibration.*

There is no single Alignment technique that can be applied, without change, to all types of equipment. Each unit has its own technique, as outlined by the equipment's manufacturer in his Service Manual. The basic technique outlined below may be applied in a general way to receivers, tuned amplifiers, and related types of equipment. Refer to Fig. 1-17.

1) Connect an appropriate Signal Generator to the equipment's "input," taking care that the connection *does not alter* circuit operation; to insure this, one of several methods may be used . . . (a) the connection may be made through a small coupling capacitor, (b) a "dummy antenna" may be used, and (c) coupling may be through a small inductive loop The type of Signal Generator used depends on the equipment – and Audio Sine-Wave Generator may be used in the case of tuned amplifiers, an R.F. Signal Generator for radio receivers.

2) Connect a suitable *output indicator* (A.C. Voltmeter, 'Scope, etc.) at the proper point in the equipment's circuit.
3) Turn the equipment "On," and adjust its controls for normal operation.
4) Set the Signal Generator to the desired test frequency and adjust its output level to the *minimum* needed for a satisfactory indication on the "output indicator."
5) Using a fiber, plastic, or insulated Alignment tool, adjust fixed tuned circuits in the equipment for an appropriate reading on the "output indicator." Often, this will be for a *peak* (or maximum) reading but, in some cases, the adjustment will be for a *null* (or minimum) reading.
6) Repeat the adjustments made above to correct for interaction.
7) Shift the Signal Generator's connection and/or frequency setting as may be necessary for additional adjustments. In some cases, it may be necessary to shift the "output indicator" connections as well.
8) Using a suitable tool, make additional adjustments at the new frequency settings . . . again, for an appropriate reading on the "output indicator." Repeat the adjustments two or three times to correct for interaction.

The Alignment of a pocket-sized transistorized superhet receiver is shown in Fig. 1-24. Here, the receiver's earphone is used as an "output indicator," and the I.F. transformers and other tuned circuits are adjusted for maximum output volume.

TV sets, some radio receivers, and other equipment having a broad frequency response may be aligned using a Sweep Generator. Here, an Oscilloscope is used as the output indicator. In the case of a receiver, the 'Scope is generally connected to the 2nd detector. An interconnection is made between the 'Scope and the Sweep Generator to obtain a horizontal sweep with a repetition rate equal to the generator's sweep rate. A separate Marker Generator (generally an R.F. Signal Generator) is used to identify the Sweep Generator's center frequency and sweep limits. The 'Scope pattern, then, represents the *overall frequency response* of the equipment, with the Marker Generator signal showing up as small "pips." Circuit Alignment is for the response pattern recommended by the equipment manufacturer. In some cases, individual circuits may be adjusted to specific frequencies, as indicated by the Marker Generator.

The *Substitution Test* is useful where a component is thought to be defective and where test instrument limitations or other conditions prevent an accurate test of the component itself. In essence, a part known to be in good condition is substituted for the suspected part, and equipment operation checked. If the trouble has disappeared, the defect has been found . . . and corrected! This technique may be applied with equal facility to coils, capacitors, resistors, transformers, or even to the transistors themselves. Frequently, a Substitution Test is the only really adequate test for a suspected transistor, for the unit may check "Good" in an inexpensive tester, yet fail to work in a critical circuit.

Where a component such as a resistor or capacitor is thought to be "open," a quick check may be made simply by "bridging" the part with a replacement, as shown in Fig. 1-26. This technique is a popular way of checking electrolytic filter and bypass capacitors, but care must be taken to observe D.C. polarities.

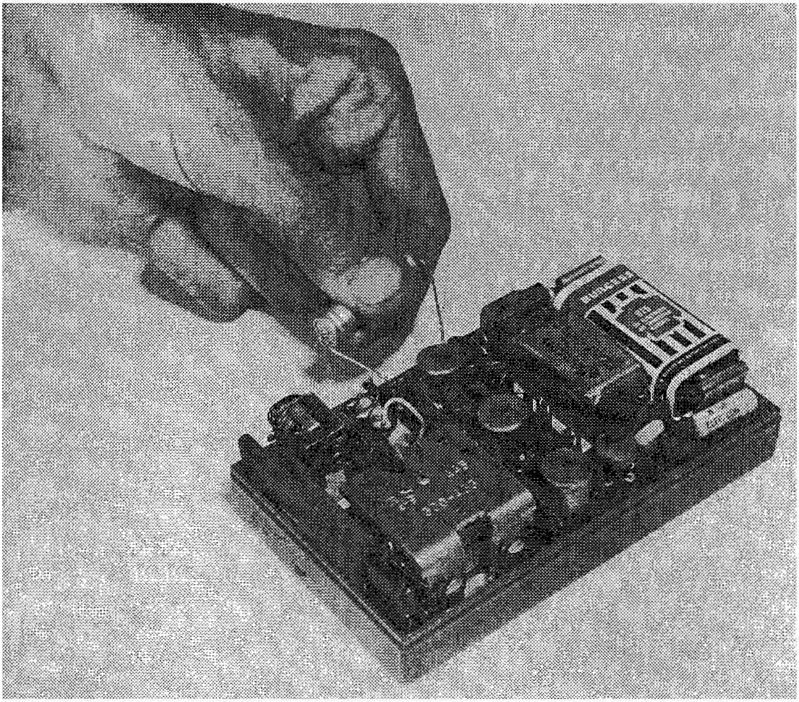

Fig. 1-26: "Open" capacitors and similar components may be given a quick SUBSTITUTION test by bridging a good part across their terminals as shown here. Use a part with similar or identical electrical characteristics.

Standard *Component Tests* are made after the defect has been isolated to a specific stage using Static or Dynamic Test techniques. Often, the isolation test used (or *Troubleshooting Chart*) will point to a specific component. In other cases, it may be necessary to check two or three parts. Resistors may be checked for value with an

Ohmmeter or C-R Checker; capacitors may be checked with a C-R Checker, or for shorts (and leakage) with an Ohmmeter; coils and transformers may be checked for continuity and "shorts" with an Ohmmeter. A *Q Meter* or an *Impedance Bridge* is needed for an overall quality check of a coil. Since these are "laboratory" rather than "service" instruments, and seldom available in the average shop, the technician generally assumes that a coil is "good" if it checks O.K. for continuity and has no shorts; otherwise, he will try a replacement.

As a general rule, a suspected part must be removed from its circuit before it can be tested, or at least one of its leads must be disconnected, to avoid inaccurate readings caused by components in parallel with the unit. In recent years, however, several manufacturers have introduced test equipment which permits "in circuit" tests. The use of a *Capacitor Checker* designed for such applications is illustrated in Fig. 1-27.

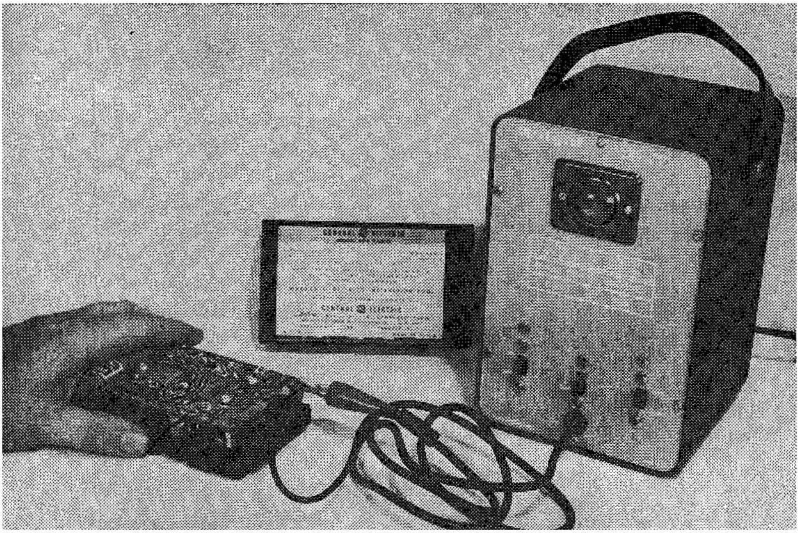

Fig. 1-27: Using a Capacitor Checker to perform "in-circuit" component tests.

"UNIVERSAL" TROUBLESHOOTING CHARTS

Many servicemen hesitate to tackle repair jobs on electronic equipment with which they are not familiar, feeling that the task may prove beyond their skills and knowledge. The experienced "old timer," on the other hand, may take on such jobs without hesitation, for he realizes that *all* electronic equipment of a given general type (tube-operated, transistor-operated, etc.) works on the same principles, uses the same basic components (resistors, capacitors, coils, etc.), can suffer the same defects, and, in general, can be serviced using the same troubleshooting techniques. In fact, if we consider complaints in *broad* rather than *limited* terms, specific defects may cause the *same complaints* in all types of equipment. The physical manifestation of the "complaint" may vary considerably from one type of equipment to another, however. Let's examine a practical example.

A defect such as a "leaky" transistor in an amplifier stage can cause *distortion.* This broad complaint (distortion) may manifest itself in different ways in different types of equipment, as follows:

(a) In the video section of a TV set, the distortion may show up as a *smeared picture.*
(b) In an audio amplifier or radio receiver, it may show up as *garbled sound.*
(c) In a radio transmitter, it may show up as *excessive harmonic radiation.*
(d) In an instrument, it may show up as *inaccurate readings.*
(e) In an item of industrial control equipment, it may show up as *erratic operation.*

But in every case, the defect is the same (leaky transistor), the basic circuit is the same (amplifier), the *broad complaint* is the same (distortion), and *the defect can be found using the same general troubleshooting techniques* (Signal Tracing, for example).

Thus, it is possible to design a set of *"Universal" Troubleshooting Charts* which apply to all types of electronic equipment. Three such charts are given in Tables 1-A, 1-B, and 1-C. Detailed Troubleshooting Charts applying to specific types of equipment are given in later Sections. These charts, then, should be used only where specific test charts are not available . . . for example, where the equipment serviced is a newly developed type or highly specialized instrument not discussed in this manual.

Table 1-A is used to select a suitable diagnostic test technique. To use this chart, first determine the *general complaint.* To do this, you'll have to interpret the specific "physical" complaint in terms of its broad technical nature, as was done in the examples given above. For instance, if the equipment *doesn't work at all,* it is DEAD, whether the item is a receiver, audio amplifier, industrial control, transmitter, or test instrument. If the equipment *works, but lacks its usual response,* it is "WEAK." In a radio transmitter, this may show up as lowered power output, in a receiver as lack of sensitivity, in control equipment as sluggish operation. If the equipment *works "now and then,"* or if some other *complaint "comes and goes,"* it is considered INTERMITTENT. If the equipment *works, but not*

DIAGNOSTIC TECHNIQUE → COMPLAINT ↓	VISUAL INSPECTION	RESISTANCE CHECKS	VOLTAGE CHECKS	SIGNAL TRACING	SIGNAL INJECTION	"BRUTE-FORCE"	PARTS SUBSTITUTION	COMPONENT TESTS	ALIGNMENT	TEST TRANSISTORS	TEST BATTERIES	REMARKS
DEAD	●	●	●*	●*	●*		●	●		●	●	
"WEAK"	●		●*	●*	●*				●*	●	●	Alignment if indicated by other tests
INTERMITTENT	●		●		●	●*	●*	●		●	●	
DISTORTION	●	●*	●*	●*	●		●	●	●	●	●	"Weak" and "distorted" may be a common complaint
OSCILLATION ("Squealing")	●	●	●	●*			●*		●*	●	●	Similar tests for complaint of "hum" or "noise." Alignment if indicated by other tests

TABLE 1-A: A "Universal" Troubleshooting Chart which can be used to choose diagnostic techniques for the most common complaints in ALL TYPES of transistorized equipment. The techniques identified by diagonal shading are used regardless of complaint. The techniques identified by round dots may be used for the complaints listed . . . those identified by stars or asterisks (*) are the best. The BEST technique to use in any single case depends on the type of equipment serviced, test equipment available, and the technician's previous experience with the equipment. Where the trouble is an unusual one, or represents a "combination" of complaints (such as "intermittent distortion"), two or more test methods may be employed before the defect is finally isolated.

quite properly, the complaint is DISTORTION; in a radio transmitter, this may show up as excessive harmonic radiation or a shift in output frequency, in a receiver or amplifier as "garbled sound," in a TV set as a deterioration of picture quality, or in control equipment as erratic operation. If the equipment is *unstable,* the complaint is OSCILLATION; the test methods used for this last general complaint also apply where circuit operation is upset by an undesired signal, such as *hum, noise,* or *interference.*

In most cases, any of several test techniques may be used, depending on the test instruments available and the type of equipment serviced. Two general checks should be made regardless of complaint . . . the equipment should be given a quick VISUAL INSPECTION for obvious defects or physical and mechanical damage, and the batteries (or Power Supply) should be checked; incorrect supply voltages can cause a variety of complaints. Where ALIGNMENT is indicated by the table, this is necessary only for equipment which utilizes fixed tuned circuits. Finally, the transistors should be tested *only* if other techniques have failed to isolate the defect.

Table 1-B serves as a general guide to the defects which may cause the general complaints listed. The listing for DEFECTIVE MAJOR COMPONENT refers to parts which are *not* resistors, capacitors, coils, or transistors; depending on the equipment serviced, these may be such components as *relays, loudspeakers, solenoids, transducers, meters, motors, Geiger tubes, sensors,* and so on. Generally, a major component defect will be obvious from the equipment's operation.

Finally, Table 1-C outlines, in block diagram form, basic service procedure for all equipment. The first step, of course, is a quick VISUAL INSPECTION of the equipment, watching for discolored insulation, charred resistors, broken components, or other obvious physical or electrical damage. This, in itself, may permit a quick isolation of the defect. At this time check with the "customer" to see if the equipment has been subjected to unusual operating conditions . . . to excessively high temperatures, high humidity, and so on.

Always CONFIRM THE COMPLAINT; in general, to do this, try out the equipment and make sure that the "complaint" is as described by the "customer." Too often, a layman will use the catch-all expression . . . "it doesn't work" . . . to cover everything from *weak* operation to *distortion.* The technician, on the other hand, may use the same expression only to describe a *dead set.*

Afterwards, a quick check may be made of the POWER SUPPLY (Batteries) and, if desirable, of any "plug-in" components used. In most cases, an equipment manufacturer will use plug-in parts only where the components are likely to fail after extended service.

POSSIBLE DEFECT → **COMPLAINT** ↓	**OPEN RESISTOR**	**SHORTED RESISTOR**	**CHANGED VALUE R**	**OPEN CAPACITOR**	**SHORTED CAPACITOR**	**LEAKY CAPACITOR**	**OPEN TRANSISTOR**	**SHORTED TRANSISTOR**	**LEAKY TRANSISTOR**	**LOW GAIN TRANS.**	**OPEN COIL OR CHOKE**	**OPEN TRANSFORMER**	**WEAK BATTERIES**	**DEFECTIVE MAJOR COMPONENT**	**REMARKS**
DEAD	●	●		●	●		●	●		†	●	●	●	●	† If local oscillator in superhet
WEAK			●	●		●			●	●			●	●	
INTERMITTENT	●	●	●	●	●		●	●			●	●	●	●	
DISTORTION	●		●	●		●			●	●			●	●	
OSCILLATION		●	●	●					●				●	●	
HUM OR NOISE			●	●					●				●	●	

TABLE 1B: This "Universal" Troubleshooting Chart identifies the various defects which may cause common complaints in ALL TYPES of electronic equipment. In some instances, one defect may cause another. For example, a shorted capacitor may result in a resistor heating and either burning out or changing value. In rare instances, one defect may "act" like another . . . for example, an "open" resistor in a voltage divider circuit may have the same effect on equipment operation as a "changed value" resistor in another part of the circuit. Use this table as a general guide, referring to specific tables and Troubleshooting Charts in later Sections.

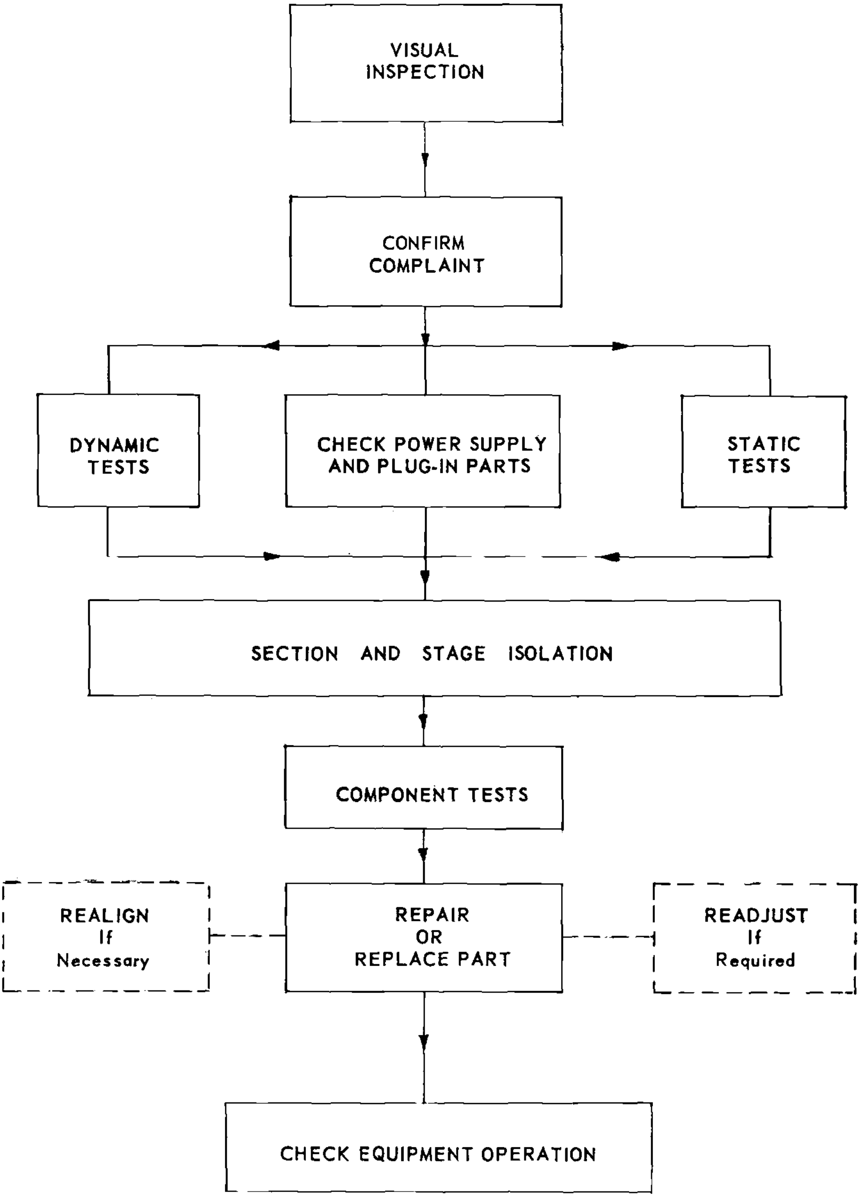

TABLE 1-C: This chart outlines the basic steps in servicing ANY TYPE of transistorized electronic gear. Most of the steps require but a few seconds . . . a minute or two at the most. Where the technician is personally familiar with the equipment serviced, he can sometimes "skip" one or more steps. Frequent reference to the Troubleshooting Charts in this book will keep diagnosis time to a minimum.

Next, use DYNAMIC and/or STATIC Tests appropriate to the equipment and to the nature of the complaint to isolate the trouble to a particular stage and section. Refer to Table 1-A for suggestions, and to earlier parts of this Section for details of specific techniques. After stage isolation, COMPONENT TESTS may be applied to suspected parts.

With the defective part (or parts) isolated, REPAIR OR REPLACE it. At this point, depending on the type of equipment and the nature of the defect, it may be necessary to REALIGN tuned circuits or to READJUST fixed controls for optimum performance. Finally, CHECK EQUIPMENT OPERATION for normal performance and to determine if any obscure defects are present which were "masked" by the major complaint. For example, a radio receiver may have lacked sensitivity or been *weak* for months before a second defect caused the set to become *dead.* The receiver's owner may have tolerated the weak operation, and may fail to mention this prior condition to the service technician. Obviously, the set cannot be serviced for *weak operation* until *after* the defect causing it to be dead has been isolated and corrected. If a second complaint is discovered, the basic service procedure may be repeated, but this time "skipping" the first few steps.

Section 2

SERVICING PREAMPLIFIERS AND HEARING AIDS

THE TRANSISTOR's first important commercial application was in Hearing Aids . . . basically high-gain, low-level audio amplifiers. In this field, the transistor completely displaced the sub-miniature vacuum tube in a matter of months and, today, *all* commercially manufactured Hearing Aids use transistors. The transistor's small physical size, light weight, and ability to operate on a single power source (tubes require two sources . . . *filament* and *plate* voltages) have influenced its use here, but are not the only factors contributing to its predominance in this application. Other factors are its long, almost infinite, service life and its overall ruggedness . . . transistors can sustain, without damage, physical shocks many times greater than the typical vacuum tube can handle.

Quite aside from its physical characteristics, however, the transistor is superior to the vacuum tube in low-level audio work on other counts. First, a carefully manufactured and selected transistor has a much lower inherent noise level than a vacuum tube of similar quality. Second, a transistor's power supply requirements are more nearly comparable to its signal-handling capacity, leading to much more efficient circuit operation. A vacuum tube may require from 100 milliwatts to several watts power to handle millivolt signal levels . . . a transistor may require but a milliwatt or two to handle the same signal. This second factor contributes to long battery life in portable equipment. Third, low-power transistors run "cool," and will not overheat adjacent components; in tube-operated equipment, the heat developed by the tubes may cause electrolytic capacitors to dry out, shortening their service life, or may cause a gradual deterioration of circuit insulation. Finally, transistors can operate efficiently on very low supply voltages. This permits the use of less costly components, reduces the possibility of voltage breakdown, and makes battery operation much more practical.

All of these factors have affected the transistor's use in low-level audio equipment, with the result that, today, more and more equipment manufacturers are switching from tube to transistor circuitry. This trend is likely to continue in the future, with the transistor finding broader uses in various types of preamplifiers, P.A. microphone mixers, Hi-Fi gear, medical electronic apparatus, and audio test instruments.

THE BASIC PREAMPLIFIER. As the name indicates, the preamplifier (or, simply, "preamp") is a device intended for use *ahead* of some other type of equipment. As an accessory instrument, it may be used for any of several jobs. Generally, it serves to boost a relatively weak signal to a level sufficient to insure adequate drive to an amplifier or other unit. However, it also may be used as an impedance-matching device, or may serve as a compensating amplifier to correct for line losses. Preamps are used extensively in Hi-Fi and P.A. audio work, in medical equipment, in broadcast and recording studios, in control and alarm devices, and in some test instruments.

It is simplest form, a preamp is a single-stage resistance-coupled amplifier, as shown schematically in Fig. 2-1 (a). Although the circuit

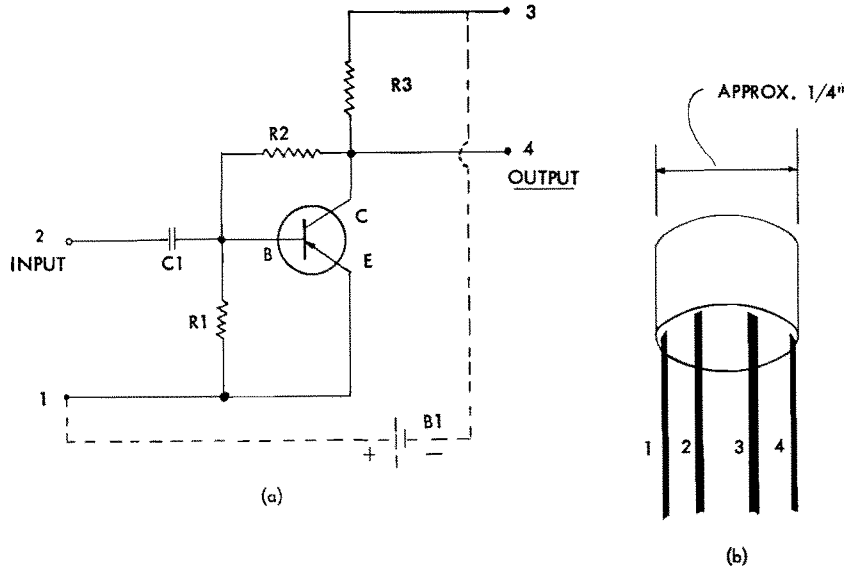

(a)

(b)

Fig. 2-1: A single stage transistorized preamplifier available in encapsulated form. The schematic diagram is given at (a), lead connections for the CENTRALAB TA-6 (and TA-7) amplifier at (b).

shown applies specifically to that used in Centralab's type TA-6 encapsulated amplifier, it is typical of those used in many types of preamps. The lead identification numbers (1, 2, 3, and 4) refer to the terminal connections of the Centralab unit, shown in outline form in Fig. 2-1(b). The TA-6 amplifier is a sub-miniaturized unit measuring approximately one-fifth of an inch long by a little over one-quarter of an inch in diameter; all three resistors (R1, R2, R3), the input coupling capacitor (C1), and the transistor itself are wired and sealed within this small volume. Electrically, the TA-6 provides a gain of 21 db, has an input impedance of 1,000 ohms, and a frequency response flat within 2 db from 250 cps to 20 KC; it requires approximately 0.5 MA at 1.3 volts for operation, supplied by an external battery (B1, shown dotted in the diagram). A companion amplifier, the TA-7, is similar, except for the omission of R3; it is designed to use an external load, such as an output transformer, earphones, or a small audio choke. Intended for use as a "power" amplifier, the TA-7 delivers a maximum output of 1 milliwatt, has a rated gain of 26 db, and requires approximately 2.0 MA at 1.3 volts.

Referring to Fig. 2-1(a), a *PNP* transistor is used in the common-emitter circuit configuration. In operation, C1 serves as the input coupling capacitor and to block any D.C. present in the input signal. Base bias is supplied by voltage divider R1-R2. R3 serves as the collector load. Since R2 is returned to the transistor's collector electrode rather than to the power source, the amplified signal developed across R3 is fed back through R2 (along with the D.C. bias current) to serve as a degenerative feedback signal. This reduces stage gain slightly, but improves circuit stability with changes in ambient temperatures, variations in supply voltage, or differences in the characteristics of individual transistors.

The circuit given in Fig. 2-1(a) is used for conventionally wired preamps as well as for encapsulated units (like the TA-6 and TA-7). Relatively few defects can develop in such units. C1 may become leaky if a high D.C. voltage is applied to the *input* terminal; if the leakage is small, the output signal may be distorted . . . if large, the amplifier's output may drop to zero (stage *dead*) and the transistor may be damaged. The transistor can also be damaged by physical or electrical abuse . . . for example, by exposure to excessively high temperatures or by the application of a high D.C. supply voltage. Since very low currents pass through the three resistors, these components are not likely to fail in normal use.

Where a small preamp is assembled on an etched circuit board or wired on a small chassis, circuit repairs are relatively easy; the defective component, once isolated, is simply replaced. If a defect develops in a sealed or encapsulated preamp, on the other hand, the entire unit must be replaced.

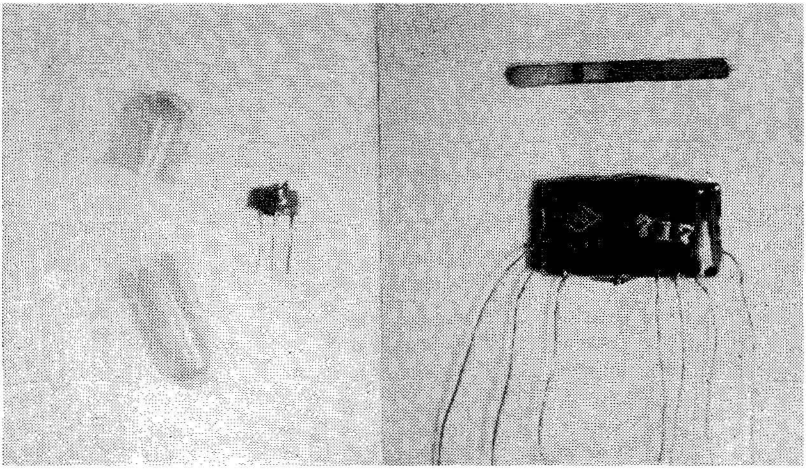

Fig. 2-2: Encapsulated amplifiers. A single stage unit is shown at (a) (see Fig. 2-1 for schematic and lead connections); a four-stage unit at (b) (see Fig. 2-14 for schematic, Fig. 2-15 for lead connections) . . . a matchstick is included in the latter photo for size comparison.

MICROPHONE PREAMPS. Carbon microphones have a relatively high output level compared to crystal, dynamic, ribbon, or magnetic units, and, for this reason, are used extensively in radio communications work, even though they are inherently noisy ("hiss") and have a tendency to "age" when used under conditions of vibration. As a carbon microphone ages, its sensitivity and output level drops, its noise level increases, and its distortion goes up. In order to obtain the high output level of a carbon microphone while retaining the low noise characteristics of magnetic and dynamic units, several manufacturers have introduced "transistorized" microphones. Generally, these units consist of a magnetic microphone cartridge and a

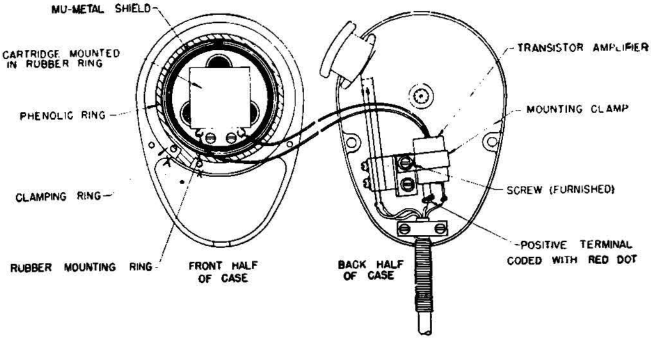

Fig. 2-3: Sketch showing interior of a transistorized microphone.

single-stage transistor preamp mounted in single case, as diagrammed in Fig. 2-3. A typical "mike" cartridge and preamp are shown separately in Fig. 2-4. The circuits used may be similar to that given in Fig. 2-1(a), except that an external load resistor (R3) is used, and component values are chosen to permit operation on higher D.C. voltages (6 to 12 volts), permitting the transistorized microphone to be used as a direct replacement for carbon units. These microphones are used by Ham operators, and in police, taxicab, Marine, and other two-way mobile radio installations.

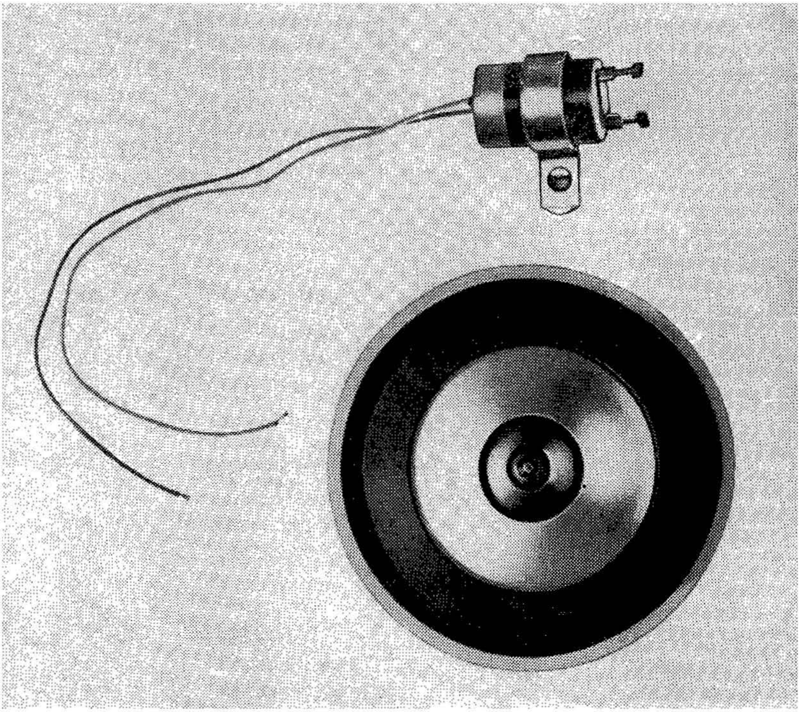

Fig. 2-4: Photograph of the cartridge (top) and self-contained amplifier used in the transistorized microphone diagrammed in Fig. 2-3.

PHONOGRAPH PREAMPS. The Madison Fielding Model 30 *MICAMP* is shown in Fig. 2-5; its schematic diagram is given in Fig. 2-6. This single-stage amplifier is typical of the simple preamps used to boost the low-level output of magnetic phono cartridges. With a nominal input impedance of 125 ohms to match the low impedance of magnetic cartridges, this unit has an output impedance of 18,000 ohms and provides a voltage gain of at least 30 db; its

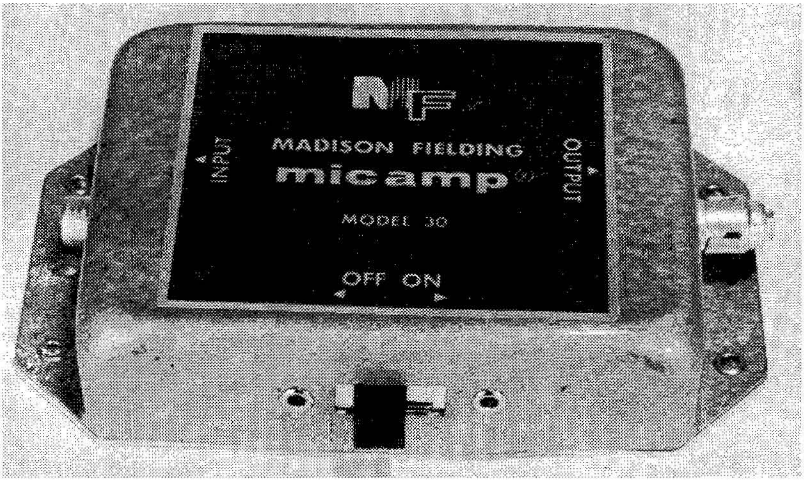

Fig. 2-5: The MADISON FIELDING Model 30 "micamp," a single stage transistorized amplifier used as a preamp in Hi-Fi work.

signal to noise ratio is better than 50 db. The amplifier has a frequency response flat to within 1.5 db from 20 cps to 20 KC, with a distortion level of less than 0.75% at full output. A 2.6 volt mercury battery (B1) furnishes operating power and has a service life of well over one year under normal intermittent operating conditions.

Referring to Fig. 2-6, a *PNP* transistor is used in the common-base circuit configuration. C1 serves as the input coupling capacitor, and R1 as the emitter load resistor. Base bias is furnished through voltage divider R2-R3. A 22K resistor, R4, is used as a collector load,

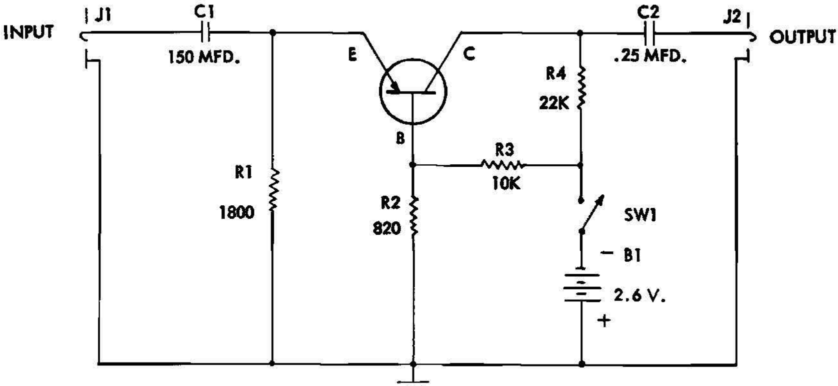

Fig. 2-6: Schematic wiring diagram of the "micamp" amplifier shown in Fig. 2-5. The common-base circuit configuration is used, providing a low input and moderately high output impedance.

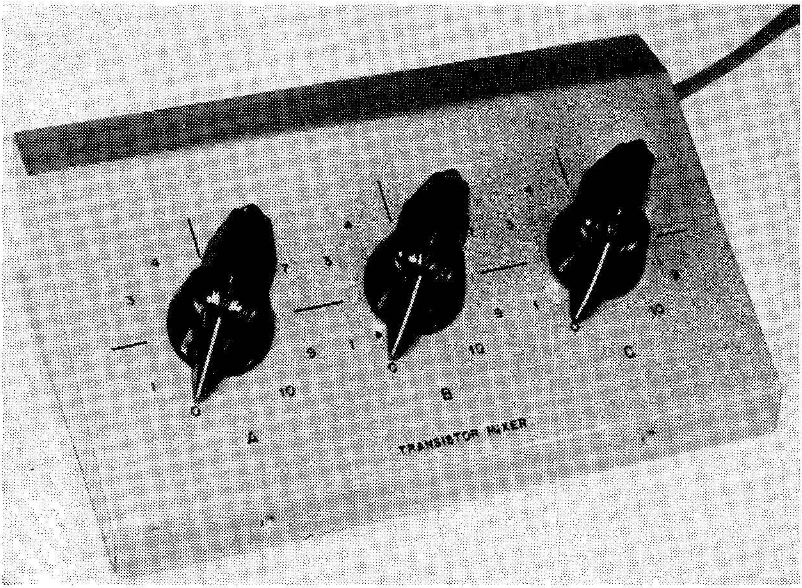

Fig. 2-7: The KNIGHT Transistor Mixer. Designed primarily for use in Public Address applications, this unit permits the output of three microphones (or other pick-ups) to be combined, while providing individual control over each input.

with the amplified signal developed across this load coupled through D.C. blocking capacitor C2 to output jack J2. Operating power is controlled by a SPST switch, SW1.

In operation, the magnetic cartridge is connected to *Input* jack J1 through a single-conductor shielded cable. A second shielded cable is connected between *Output* jack J2 and the audio amplifier with which the preamp is used. Physically, the preamp may be mounted in the record player's base or attached to its back with small wood screws. Its exact location is relatively unimportant, as long as the "ON-OFF" switch is accessible, and as long as the unit is *kept away* from hot vacuum tubes or other sources of external heat.

Aside from the battery becoming exhausted, relatively little can go wrong with a preamp of this type as long as it is not subjected to excessive operating temperatures. Like all electrolytics, C1 can dry out, losing capacity, or may become leaky, after years of operation. A loss of capacity will show up as a drop in the unit's low frequency response. Excessive leakage may cause the output signal to become distorted.

MICROPHONE MIXERS. In Public Address and recording work, it is sometimes necessary to combine (or "mix") the output of several microphones, while retaining a separate control over each and,

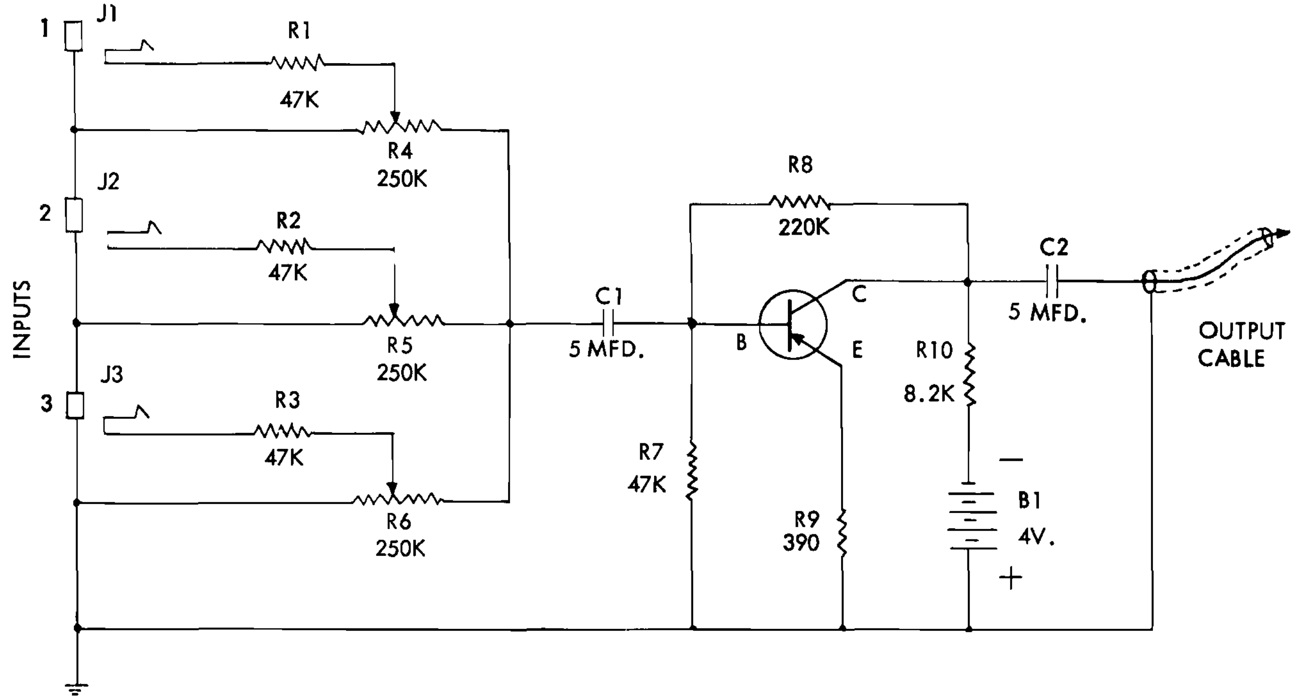

Fig. 2-8: Schematic wiring diagram of the KNIGHT Mixer shown in Figs. 2-7 and 2-9. A common-emitter circuit configuration is used. The single PNP transistor is powered by a 4.0 volt mercury battery (B1).

at the same time, preventing interaction or cross-coupling between the units. A comparatively simple resistance network may be used for this job. However, such a network, if effective in preventing interaction, will introduce an appreciable signal loss. To compensate for this, a single-stage transistorized preamp may be used with the "mixer" network.

Exterior and interior views of a commercially manufactured Microphone Mixer based on this approach are shown in Figs. 2-7 and 2-9, respectively. The instrument's schematic wiring diagram is given in Fig. 2-8. Designed to combine the outputs of as many as three high-impedance microphones and to provide a separate gain control for each, this unit uses a *PNP* transistor in the common-emitter circuit configuration. The amplifier's gain is *more than adequate* to compensate for circuit losses, resulting in an actual boost of each microphone's "effective" signal level to twice its normal value. In use, the different microphones are connected to input jacks J1, J2, and J3, and the instrument's shielded output cable is connected to the *Input* jack of the amplifier or recorder with which it is used.

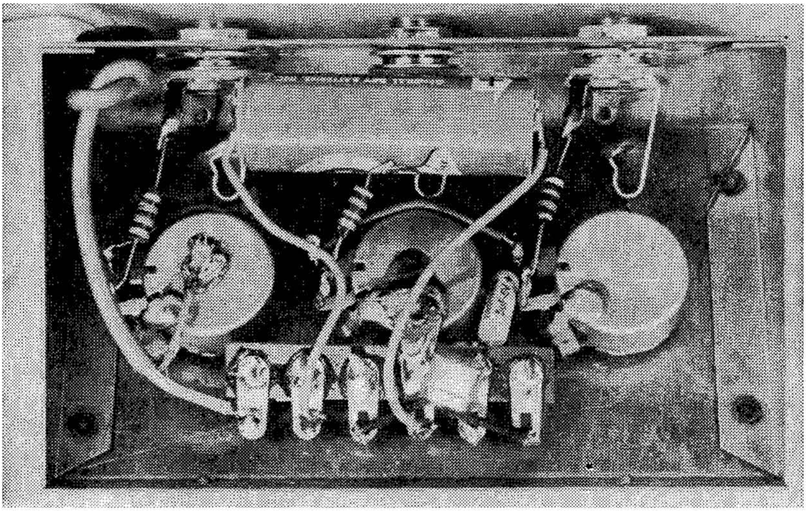

Fig. 2-9: Interior view of the KNIGHT Mixer. The transistor is soldered permanently in place in the circuit.

Referring to Fig. 2-8, isolation resistors R1, R2 and R3, together with gain controls R4, R5 and R6 make up the basic "mixer" network. In operation, C1 and C2 serve as the amplifier's input and output coupling capacitors, respectively. Base bias current is supplied through voltage divider R7-R8, operating in conjunction with emitter resistor

R9. Since R9 is not by-passed, a small degenerative feedback voltage is developed across it which aids in circuit stabilization. Additional degenerative feedback is provided through R8, which feeds back a small portion of the amplified output signal developed across collector load resistor R10. Operating power is supplied by a single 4.0 volt mercury battery (B1). This battery is permanently connected into the circuit and *is not provided with an "ON-OFF" switch;* however, due to the low current requirements of the transistor amplifier, the battery's service life approximates its normal "shelf" life.

This type of equipment develops few defects and requires relatively little maintenance. The battery has to be replaced at intervals, of course, and electrolytic capacitors C1 and C2 have to be replaced if they dry out (losing capacity) or become leaky after several years service. Gain controls R4, R5, and R6 may become noisy if subjected to considerably more than "normal" use. Finally, the shielded ouput cable may develop an intermittent open after repeated flexing.

HI-FI PREAMPLIFIERS. The preamps we have discussed thus far have used relatively simple single-stage circuits. In Hi-Fi audio work, a more complex amplifier is needed, for the preamps used here must supply higher gain, must permit frequency response equalization for different inputs, and must provide the user with adequate control over the unit's *bass* and *treble* response characteristics. In addition, equipment designed for Hi-Fi applications must meet tighter performance specifications than units intended for P.A., voice communications, or general audio work. Intermodulation and harmonic distortion, microphonics, and noise levels must be kept to minimum values. Good

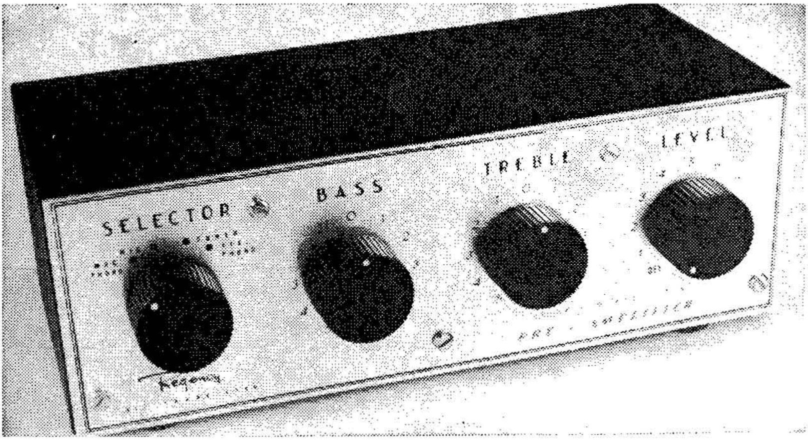

Fig. 2-10: The REGENCY "All Transistor" pre-amplifier. Designed for use in Hi-Fi installations, this multi-stage unit features several inputs and both Treble and Bass controls.

frequency response, low hum levels, and excellent long-term stability are other important characteristics.

Exterior and interior views of the Regency Model HFT-1 preamplifier-equalizer are given in Figs. 2-10 and 2-12. The instrument's schematic diagram is shown in Fig. 2-11. Two high-level, high impedance and two low-level, low-impedance inputs are provided. The high-level inputs are designed to accept signals from AM or FM Tuners, crystal or ceramic phono cartridges, or a Tape Recorder. One low level input is designed to match the output of a magnetic phono cartridge, the other to accept signals from low impedance dynamic or ribbon microphones. With a maximum output level of over 2 volts (RMS) across a 10,000 ohm impedance, the unit can be used to drive any standard Hi-Fi Power Amplifier. With maximum gain, an output level of 1.0 volt is obtained with high level inputs of 0.5 volt, a magnetic phono input of 11 millivolts, or a low level microphone input of only 0.2 millivolts; at this output level (1 volt), noise is 70 db down. The unit's intermodulation distortion level averages less than 0.5%. With the Bass and Treble controls in their center (flat) position, the instrument's frequency response is flat within 0.5 db from 20 cps to 20 KC.

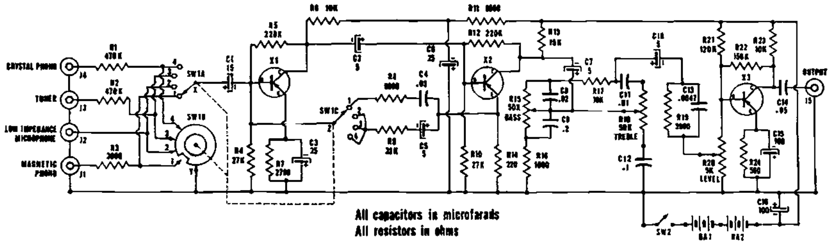

All capacitors in microfarads
All resistors in ohms

Fig. 2-11: Schematic wiring diagram of the REGENCY amplifier shown in Figs. 2-10 and 2-12. Three PNP transistors are used.

Using low-noise *PNP* transistors, the HFT-1 is basically a three-stage resistance-coupled amplifier. The common-emitter circuit configuration is used in all stages. Operating power is supplied by two 9-volt batteries (BA1, BA2) connected in series to supply 18 volts. Since the unit requires only 2.5 MA for operation, battery life is quite long . . . well over 500 hours.

Referring to Fig. 2-11, we see that *Selector* switch SW1 serves three functions. One section (SW1A) selects the input signal to be applied to the first stage (X1) through coupling capacitor C1. A second section (SW1B) shorts out the unused input jacks to prevent "cross-talk" and noise pick-up. Finally, a third section (SW1C) switches in different coupling networks (R8-C4 and R9-C5) between the emitter electrode of the second (X2) and base of the first (X1) stage to provide the response equalization needed for each input. Thus, the signal voltage appearing across unbypassed emitter resistor R14 is fed back to X1 to serve as a control over the amplifier's frequency response characteristic.

In operation, X1's base bias current is supplied by voltage divider R4-R5, working in conjunction with emitter resistor R7, bypassed by C3. A portion of the amplified signal voltage appearing across collector load R6 is coupled back through R5 as a degenerative feedback signal, insuring good circuit stability. R11 and C6 form a simple decoupling filter. X1's output signal is coupled through C2 to X2's base electrode. Base bias for the second stage (X2) is supplied by voltage divider R10-R12, in conjunction with emitter resistor R14; R12 is returned to X2's collector to obtain the degenerative feedback signal needed to insure good stability. The amplified signal appearing across X2's collector load, R13, is coupled through C7 to the Bass and Treble tone control network, consisting of R16, Bass control R15, C8, C9, R17, C11, Treble control R18, and C12; from here, the signal is coupled through C10 and compensation network C13-R19 to Level control R20, and then to X3's base. X3's base bias is supplied by voltage divider R20-R21, in conjunction with

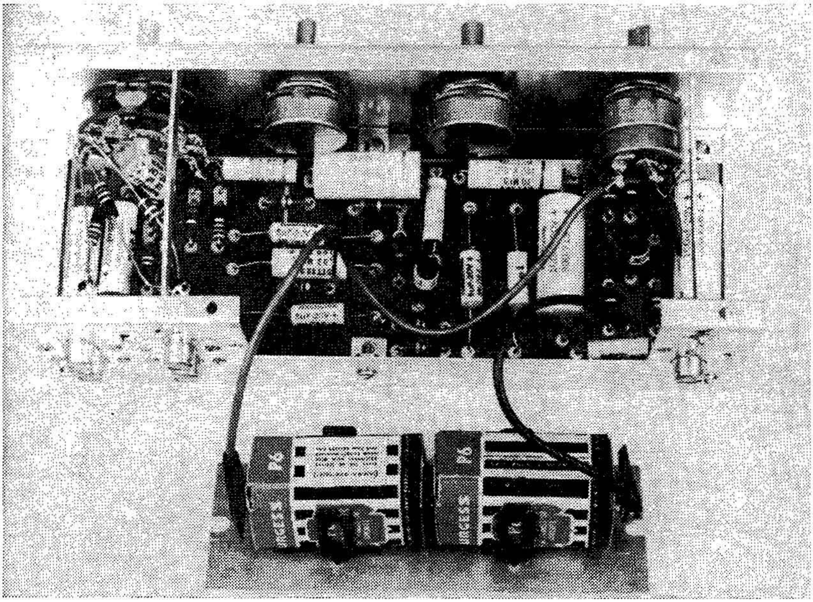

Fig. 2-12: Interior view of the REGENCY pre-amplifier. All components, except for the controls and batteries, are assembled on an etched circuit board.

emitter resistor R24, bypassed by C15; a degenerative feedback voltage is obtained from X3's collector and fed back to its base through R22. The final output signal appears across X3's collector load, R23, and is coupled through D.C. blocking capacitor C14 to the unit's *Output* jack, J5. C16 serves as a general bypass across the power supply.

The schematic diagram of Lafayette Radio's Model KT-117 preamplifier is given in Fig. 2-13. This popular instrument has a reason-

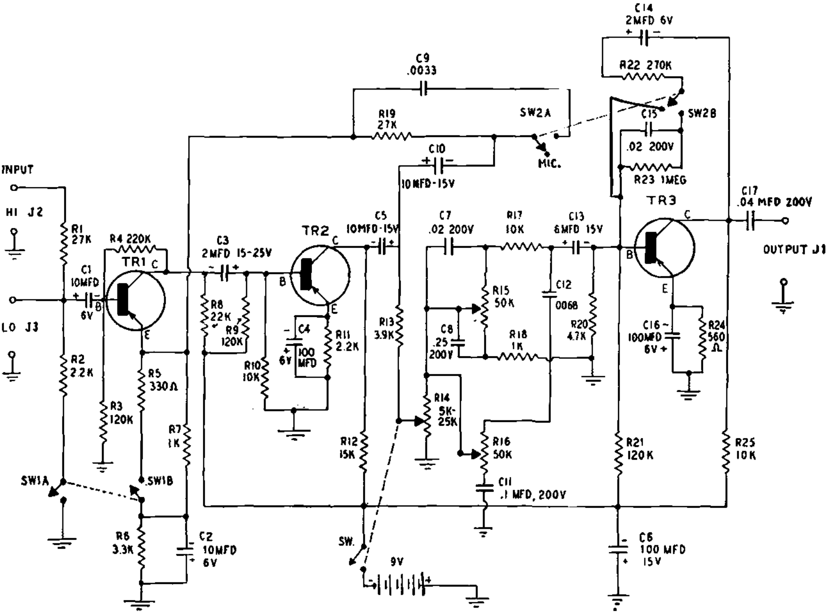

Fig. 2-13: Schematic wiring diagram of the LAFAYETTE Model KT-117 audio preamplifier. Using PNP transistors in the common-emitter configuration, this unit may be used for general purpose as well as Hi-Fi applications.

ably flat frequency response from 20 cps to 20 KC, and can supply a maximum gain of 40 db. Its noise level is 48 db below a 10 millivolt input for high impedance (crystal or ceramic) cartridges, or better than 52 db below a 2 millivolt input for low impedance (magnetic) pickups. Supplying output signals up to 1.0 volt, the unit is powered by a single 9-volt battery. Separate Bass and Treble controls are provided, together with switches to adjust for "High" and "Low" level input signals (SW1) and to change circuit equalization for "Microphone" or "Phonograph" operation (SW2). The overall circuit arrangement is similar to that in the Regency preamp in that *PNP* transistors are employed in a three-stage resistance-coupled amplifier, with the common-emitter configuration used in all stages. However, the input switching circuit and frequency equalization networks are somewhat simpler than those used in the HFT-1.

Assuming the equipment hasn't been abused, the most common service complaints associated with Hi-Fi preamps are those resulting from *weak, dead,* or *high resistance* batteries. Next are those resulting from defective jacks, plugs, and interconnection cables. After the equipment has been in use for a number of years, other defects may be encountered, including *open* and *leaky* electrolytic capacitors, and *noisy controls.*

SPECIAL PREAMPS. As a class, Hi-Fi preamplifiers are the most complex encountered in normal service work. However, modified versions of Hi-Fi preamps are used in a number of fields. Most of these use similar basic circuits, but employ simplified equalization, compensation, and tone control networks. The *Electronic Stethoscope* is a typical example. Used by both the Medical Profession and by Industry (to track down vibrations in heavy machinery), these instruments are basically three or four-transistor amplifiers with circuits very similar to those used in a Hi-Fi preamp, but with the equalization network designed to extend their low frequency response. These devices are used with a *Vibration Pickup* (basically, a special type of microphone); their output is used to drive a pair of earphones (instead of a Power Amplifier).

The *Sound Level Meter* is another example. Essentially a Hi-Fi preamp circuit-wise, but with a permanently installed microphone and an A.C. Voltmeter to indicate output signal level, these instruments are used to check sound and noise levels in factories, schools, hospitals, stores, and office buildings. They are also valuable for checking the acoustics of concert halls and theaters. In research work, the Sound Level Meter is used to determine the noise levels generated by jet engines, air hammers, turbines, or other machinery, and for measuring the effectiveness of sound dampening techniques. Finally, with stereophonic sound increasing in popularity, these instruments may be used to check to acoustic characteristics of rooms in homes or apartments, and for balancing dual-channel Hi-Fi systems.

Instrument Preamplifiers are used extensively in experimental laboratory and research work. These units are connected to the input terminals of such instruments as Recording Oscillographs, Voltmeters, Oscilloscopes, and Null Indicators, and serve to boost the instrument's overall sensitivity. Again, the circuits used are much like those in the Hi-Fi preamps discussed above, except that the continuously variable tone controls are omitted and replaced by fixed compensation circuits to obtain a flat frequency response characteristic.

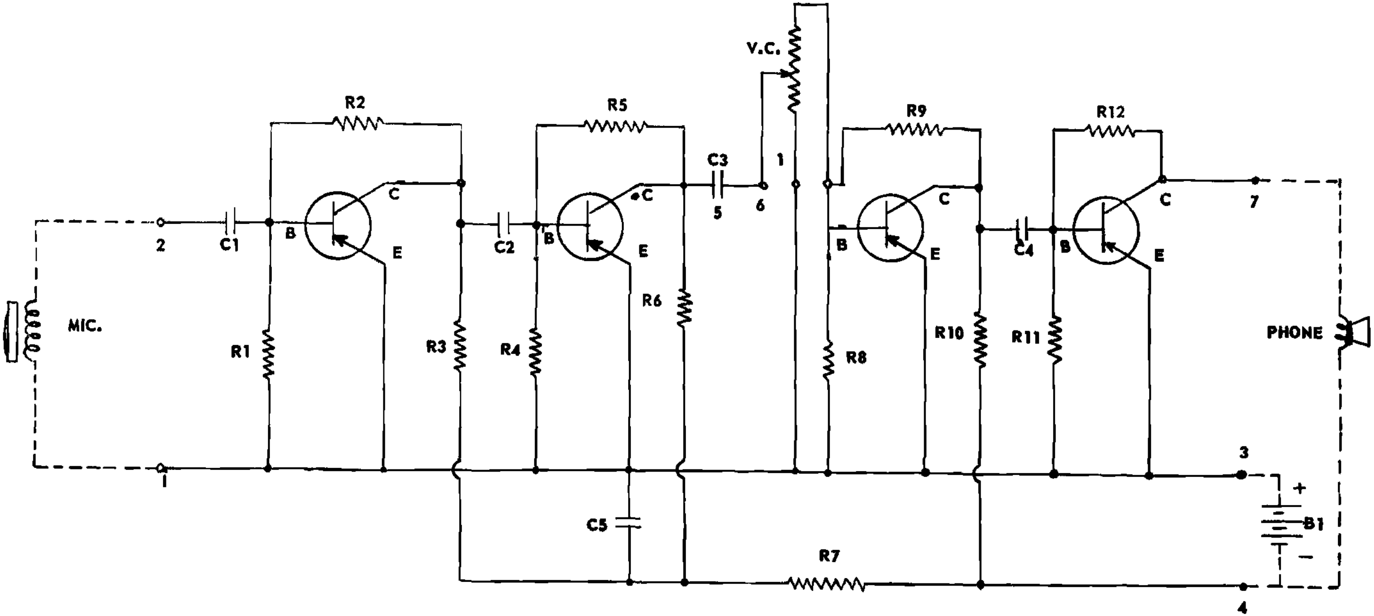

Fig. 2-14: The basic schematic diagram of the CENTRALAB TA-11 amplifier. A photograph of this unit is given in Fig. 2-2(b). This circuit is typical of that used in Hearing Aid amplifiers. Four PNP transistors are employed, with the common-emitter configuration used in each stage.

Since similar circuits are used, the service complaints associated with special purpose preamps are essentially like those encountered in Hi-Fi equipment, and are caused by similar defects. The same troubleshooting techniques may be used to check such units. Aside from circuit troubles, there may be service problems connected with the accessory equipment used with the instruments . . . with the Vibration Pickup and earphones used with the Electronic Stethoscope, or with the microphone used in a Sound Level Meter, for example. These troubles are frequently mechanical in nature, and may be spotted by Visual Inspection or the simplest of tests. They include damaged connector, plugs, broken cables, defective cartridges (in pickups and microphones), broken glass (on meter faces), and dented cases. Generally, these defects are the result of accidental damage in field work.

HEARING AIDS. The typical Hearing Aid employs a three or four-stage resistance-coupled amplifier having a gain of from 65 to 85 db and a power output of from 0.5 to 2.0 milliwatts. Most are designed for operation on from 1.3 to 4.0 volts, and require operating currents of *less* than 5.0 MA. Their medium and high frequency response characteristics are generally quite good, with some units "flat" within a few db to as high as 20 or 30 KC; this insures excellent reproduction of voice frequencies. Their ultra-small physical size prevents the use of other than sub-miniature components, how-

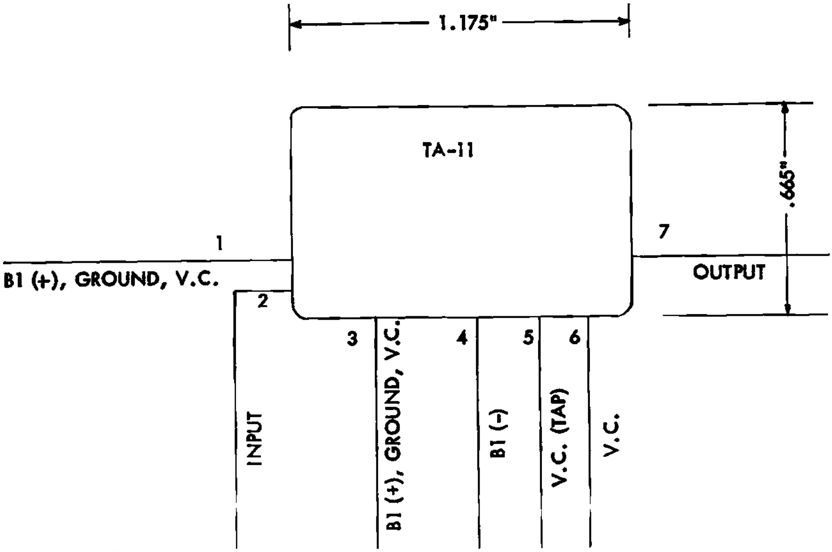

Fig. 2-15: Lead connections for the TA-11 amplifier . . . refer to Figs. 2-14 and 2-2(b).

ever, and this, in turn, limits their low frequency response. Relatively few Hearing Aids are "flat" much below 300 cps. Most Hearing Aid amplifiers are designed to use moderate impedance magnetic or dynamic microphones and earphones, and have input and output impedances from 500 to about 2500 ohms.

The schematic diagram of the Centralab Type TA-11 amplifier is given in Fig. 2-14. Although this is a general purpose unit, its circuit is typical of those used in Hearing Aids. The TA-11 is a true *printed circuit* amplifier, in that not only the wiring, but its electrical components (resistors and capacitors) are manufactured using printed circuit techniques. The entire amplifier, exluding only its *volume* control (V.C., Fig. 2-14), microphone (MIC.), earphone (PHONE), and battery (B1), is sealed with epoxy resin on a steatite plate measuring a little over an inch by about two-thirds of an inch, as shown in outline form in Fig. 2-15; the unit is less than a quarter-inch thick. Input, output, volume control, and power supply leads are identified in both illustrations.

Fig. 2-16: A commercial transistorized Hearing Aid. The unit is smaller than a package of cigarettes. Some Hearing Aids are even smaller and weigh but a fraction of an ounce.

Electrically, the TA-11 has a gain of 73 db at 1 KC, input and output impedances of 1,000 ohms, and a signal to noise ratio 20 db below a 30 microvolt input signal. When powered with a 1.3 volt mercury cell, the unit draws a current of approximately 4.0 MA, and can deliver a maximum power output of 1.0 milliwatt at a 15% distortion level. Its frequency response is flat within 5 db from 250 cps to 20 KC.

Referring to Fig. 2-14, we see that four *PNP* transistors are used in the amplifier. C1 serves as an input coupling capacitor, and C2, C3, and C4 as interstage coupling capacitors. Base bias currents are furnished by resistive voltage dividers in each stage . . . R1-R2 in the first, R4-R5 in the second, R8-R9 in the third, and, finally R11-R12 in the power output stage. In each case, the "high" side of the bias voltage divider is returned to the transistor's collector electrode; this provides a degenerative feedback signal which insures good circuit stability with respect to ambient temperature and supply voltage variations. The common-emitter circuit configuration is used in all stages, with R3, R6, and R10 serving as collector loads for the first three stages, and a magnetic earphone as a load for the final power stage. C5 and R7 form a simple decoupling filter for the first two stages.

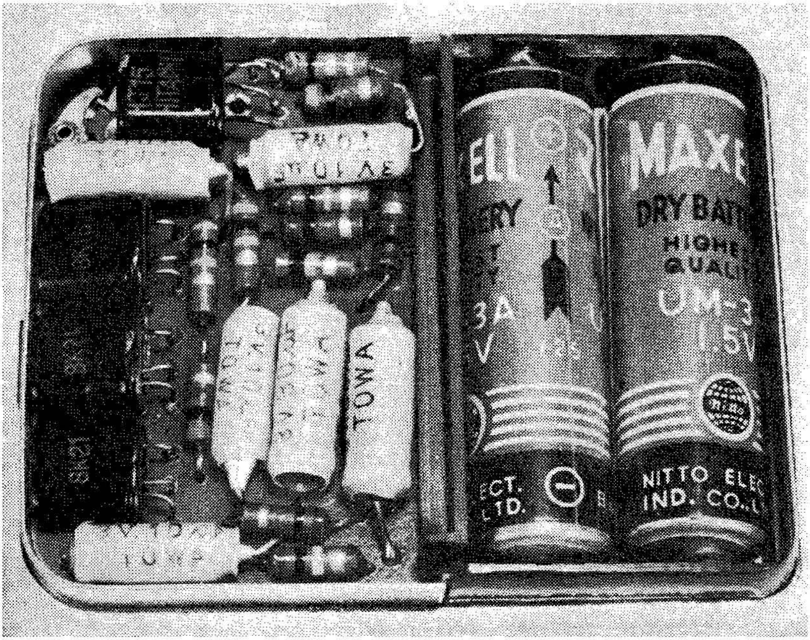

Fig. 2-17: Interior view of the Hearing Aid shown in Fig. 2-16. The printed circuit transistor amplifier fills a little over half the interior. Power is provided by a pair of standard penlight cells.

While similar circuit arrangements are used in most Hearing Aids, a variety of construction techniques are employed. Some are manufactured using printed circuit components and wiring (like the TA-11), others are wired using "conventional" construction, and still others, perhaps a majority, are assembled using standard sub-miniature components assembled on an etched circuit board. The latter type of construction is used in the Hearing Aid shown in Figs. 2-16 (exterior) and 2-17 (interior). If a component defect develops in a sealed printed circuit amplifier, repairs are not feasible, and the entire assembly must be replaced. Where standard parts are used, on the other hand, component replacement is a practical technique.

Circuit component defects in Hearing Aid amplifiers are a relatively rare occurrence, however, with the great majority of service complaints the result of defective batteries, noisy controls, broken switches, or mechanical defects in the microphone, earphone socket or plug, earphone cord, or earphone itself. An intermittent "open" in an earphone cord, for example, is a fairly common defect. Transistor or component defects may develop, of course, if the Hearing Aid is abused or exposed to excessively high temperatures.

TROUBLESHOOTING CHARTS

The Troubleshooting Charts given in Tables 2-A, 2-B, 2-C, and 2-D have been carefully designed to apply to *all* types of transistorized low-level audio amplifiers, including Microphone and Phono Preamps, Mixers, Hi-Fi Preamplifiers, Electronic Stethoscopes, Sound Level Meters, Instrument Preamps, or Hearing Aids. They may be applied with equal facility to single or multi-stage devices. Table 2-A outlines typical complaints and indicates preliminary tests which should be made before other, more complex, tests are used; often, these tests will isolate the defect almost immediately. Table 2-B outlines general complaints and indicates probable defects. Table 2-C is similar to 2-B, but refers specifically to "intermittent" troubles. Finally, Table 2-D indicates various defects which may cause different types of distortion . . . that is, changes in the "quality" of the amplified signal.

COMPLAINT	PRELIMINARY TESTS
DEAD	Check battery; try out unit, adjusting all controls; make sure input and output connectors are secure; if plug-in transistors used, make sure they are all in sockets.
WEAK	Check battery; apply test signal and check unit's operation; check D.C. operating voltages on transistor electrodes.
HUM OR NOISE	Try wriggling input and output cables; watch for open shielding; try a 50-100 MFD. by-pass across battery or power supply as check for high impedance circuits.
DISTORTION	Check battery; check unit's operation, readjusting controls; make sure a normal input signal is used; obtain case history...if unit has been subjected to high temperatures, test all transistors.
OSCILLATION (Squealing)	Check battery; check shielding; use substitute electrolytic (about 100 MFD.) to shunt across by-pass and filter capacitors.
INTERMITTENT OPERATION	Check battery and power supply connectors; operate unit under normal conditions, adjusting each control or switch over full range; wriggle input and output connectors and cables; make sure transistors are firmly seated in their sockets (if used).

TABLE 2-A: PRELIMINARY TEST TROUBLESHOOTING CHART. Carry out the basic tests shown first. Often, the defect will be found within a minute or so.

PROBABLE DEFECTS → COMPLAINT ↓	BATTERY		CAPACITORS				CONNECTORS CABLES				TRANSISTORS							REMARKS
	Dead	Weak	Leaky coupling	Open coupling	Leaky by-pass	Open by-pass	Shorted	Open	Partial open	Partial short	Noisy	Weak	Open	Leaky	Defective shield	Defective gain or tone control	Defective pickup or microphone	
DEAD	*		●		●		●	●					●				●	
WEAK		*		●				●	●	●		●					●	
NOISY						*			●	●	●				*	*	●	Noisy load resistor (rare)
HUM						*									*		●	
DISTORTION		*	*		*									*		●	●	
INTERMITTENT		●		*					*	*				●	●	●	●	
OSCILLATION		*				*								●	*			Also "Motorboating"
TEMPERATURE SENSITIVE			●		●							●		*				
MICROPHONIC						●				●	●		●		*	●	*	

TABLE 2-B: GENERAL COMPLAINT TROUBLESHOOTING CHART . . . for preamps and Hearing Aids. Various complaints are listed, along with probable defects. The most common defects are identified with an asterisk (*), while other defects which can cause the complaint are identified with large dots.

PROBABLE DEFECT	CAPACITORS				CABLES CONNECTORS											
INTERMITTENT COMPLAINT	Leaky coupling	Open coupling	Leaky by-pass	Open by-pass	Partial open	Partial short	Poor contact	Defective circuit board	Poor socket contact	Defective transistor (s)	Defective shielding	Defective transducer	Weak battery	Defective resistor	Defective control (s)	DESCRIPTION
DEAD		*			*	*		●	●	●		●			●	"Works now and then"
WEAK		*					*		●	●		●	●			"Volume changes suddenly"
HUM OR NOISE				*	*			●	●	●	*		*	●	*	"Noise comes and goes"
DISTORTION	*		●							●			*	●		"Becomes garbled now and then"
OSCILLATION				*			●				*		*			"Starts squealing sometimes"
MOTORBOATING				*			●				●		*			"Putt–putt sound comes on"
TEMPERATURE SENSITIVE	*		●							*			*	●		"Works fine on some days – not so good on others"

TABLE 2-C: INTERMITTENT COMPLAINT TROUBLESHOOTING CHART. An "intermittent" complaint is one that comes and goes . . . the unit may work normally most of the time. It is the most difficult type of trouble to isolate. As before, common defects are identified by an asterisk (*), others with large dots.

PROBABLE DEFECT → / DISTORTION COMPLAINT ↓	BATTERY			RESISTORS				CAPACITORS				TRANSIST.						REMARKS
	Weak	High resistance	Poor contact	Changed value bias	High value load	Low value load	Emitter R.	Open coupling	Leaky coupling	Open by-pass	Leaky by-pass	Weak	Leaky	High gain	Defective transducer	Defective transformer	Defective control	
GARBLED	*	●	●	●					*		●		●					
WEAK & DISTORTED	*	*	●	●	●		●	●		●	●	*			●	●	●	
DISTORTS ONLY ON PEAKS	*	*		●	●				●		●	●	●	*		●		
POOR LOW FREQ. RESPONSE	●					●	●	*		●						●		
POOR HIGH FREQ. RESPONSE					●		●			●						*		
DISTORTS WITH TEMP. CHANGE		*		●					*		●	*	*	*				
DISTORTS AT MAX. VOLUME	*	●		●	●				●			*	*	*	●	●	●	
DISTORTS ON MIN. VOLUME		*	*	●			●						*				●	

TABLE 2-D: DISTORTION COMPLAINT TROUBLESHOOTING CHART. Often, the complaint is . . . "the equipment works, but not quite right." Such complaints may be grouped together as varying types of "distortion" . . . that is, a departure from normal operation. This chart will help you to track down the trouble in minimum time. Again, common defects causing the basic complaints are identified with asterisks (*).

Section 3

SERVICING AUDIO AMPLIFIERS

TO DO AN EFFECTIVE job, audio amplifiers designed to operate loudspeakers should deliver power levels from 50 milliwatts* to as high as 50 or 100 watts. In the preceding Section, we discussed *low-level* audio amplifier circuitry and troubleshooting techniques. Two basic types of amplifiers were covered . . . (a) devices designed for use with other types of equipment, such as preamplifiers and Mixers, and, (b), instruments which are complete in themselves, such as Hearing Aids and Sound Level Meters. While a number of different circuits were examined, all shared one important feature . . . they could deliver very little output power. Even Hearing Aids designed to drive moderate output dynamic earphones can supply output levels of only *one to five milliwatts.* This is *considerably less power* than is needed to drive a standard loudspeaker to normal room volume.

Power levels ranging from fifty to several hundred milliwatts are needed in equipment designed for limited coverage, such as "personal" portable receivers, some phonographs, and small intercommunication (intercom) amplifiers. Audio powers of from a half-watt to several watts are required for better coverage and by equipment used in areas having a high background noise level. Finally, multi-watt amplifiers are needed for Public Address and High Fidelity installations, or for driving the motors used in servo systems. To obtain these power levels, we must use medium and high power transistors.

Historically, the transistor was produced for many months before semiconductor manufacturers developed and introduced units capable of handling medium and high power levels. For this reason, the transistor's first industrial and commercial use was in low-level equipment; even today, with moderate and high power transistors available from many manufacturers, some of the unit's most important applications are found in low power devices. Power transistor applica-

---

*Milliwatt: One thousandth of a watt, or 0.001 watts.

tions are increasing daily, however. As we shall see in this . . . and later . . . Sections, the power transistor can be used for as great a variety of jobs as can small (milliwatt) units.

From a theoretical viewpoint alone, there is relatively little difference between low, medium and high power transistors. All three types are made from both germanium and silicon semiconductors. All three are available as either *PNP* or *NPN* types. All three can be operated at low D.C. voltages. They are all identified with the same schematic symbol(s) and have the same basic electrode connections (*emitter, base, collector*). All three have varying degrees of temperature sensitivity. They are all subject to the same general types of defects. Finally, all three may be used in the same basic circuit configurations.

At the practical level, however, there are several important differences between milliwatt and multi-watt types, quite aside from their power handling capabilities. Physically, high power transistors are much larger than low power units; medium power transistors, on the other hand, may be housed in the same size cases as milliwatt types. Continuing, high and low power transistor input impedances, operating currents, and electrical characteristics are on different orders of magnitude. In a single-ended Class A amplifier stage, for example, a low power transistor would have a typical *input* impedance of 1,500 ohms, an *output* impedance of 10,000 ohms, and might require a collector current of 0.5 milliamperes. By contrast, a multi-watt power transistor in a similar circuit arrangement would have an input impedance of 10 ohms, an output impedance of 50 ohms, and a collector current of 500 milliamperes. But both might supply the same amount of gain (in db).

Low and high power transistor types differ in other electrical characteristics. The *cut-off* or *saturation* current (sometimes called "leakage") of a small transistor may be a few *microamperes* . . . of a power transistor, as much as several *milliamperes*. Power transistors have much larger interelectrode capacities and, because of this and other factors, generally have much lower cut-off frequencies; relatively few power transistor types are currently available which can be used at frequencies much above 50 KC . . . but there are a number of small transistors which can be used as amplifiers at frequencies from 50 to as high as 1,000 MC.

Finally, small transistors develop little internal heat. Power transistors, since they handle fairly large currents, may become quite warm in operation. This heat, if not dissipated by a suitable *heat sink* or external radiator (such as a metal plate or chassis), can cause a change in the transistor's characteristics. The change is generally a *drop* in the transistor's internal impedances, resulting in an *increase* in collector current flow; this, in turn, will cause further heating and a still greater increase in collector current. If not checked, collector current may increase to the point where the transistor's junction is destroyed. This condition is called either *collector current "runaway"* or, since excessive heat is a contributing factor, *thermal "runaway."*

Let's see how medium and high power transistors are used in typical audio amplifiers . . .

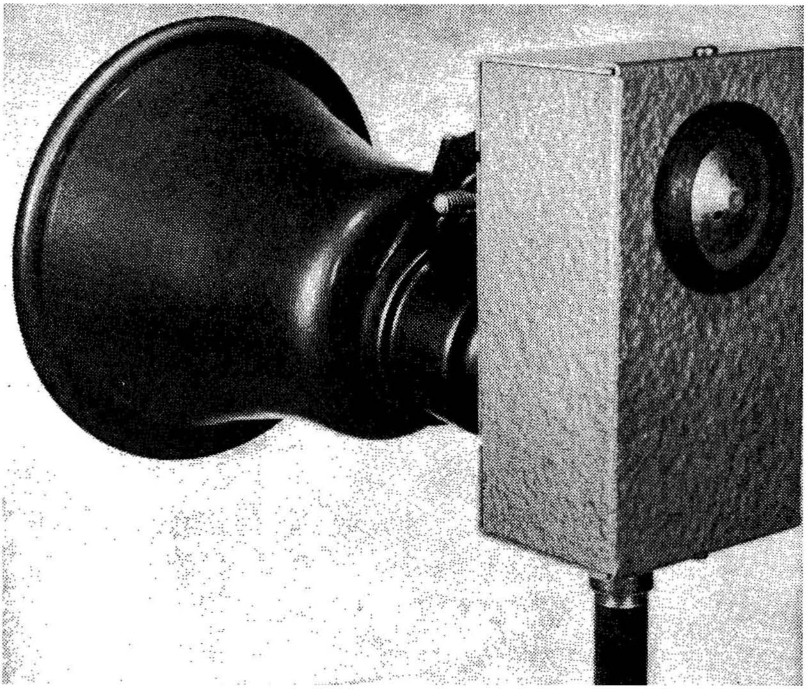

Fig. 3-1: One of the simplest of transistorized audio amplifiers . . . a Power Megaphone.

A POWER MEGAPHONE. Perhaps the simplest power amplifier circuit is one in which the power stage is driven directly by a signal source and, in turn, is transformer-coupled to its load (loudspeaker). Such an arrangement is used in the Power Megaphone shown in Fig. 3-1; the unit's schematic diagram is given in Fig. 3-2. Instruments using similar (as well as more complex) circuits are employed extensively by life-guards, policemen, firemen, coaches, construction foremen, CD workers, and military personnel, and are valuable for such tasks as directing traffic, supervising athletic events, delivering instructions and warnings, and for general person-to-person communications during floods, fires, or other disasters.

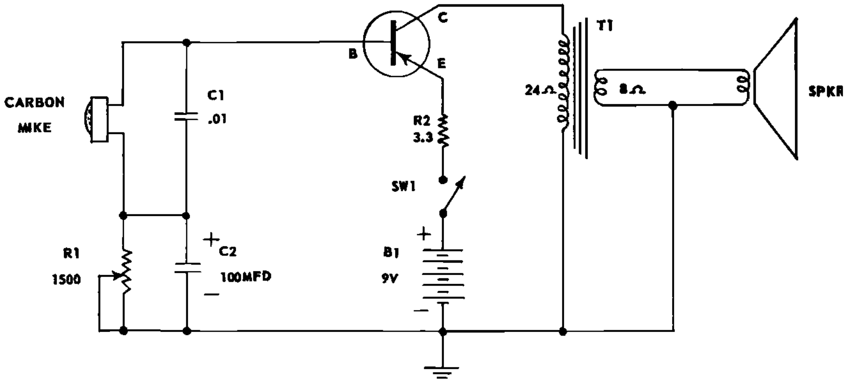

Fig. 3-2: Schematic wiring diagram of the Power Megaphone shown in Fig. 3-1. A single PNP power transistor is used. The common-emitter circuit configuration is employed.

Referring to Fig. 3-2, a multi-watt *PNP* power transistor is used as a single-ended Class A amplifier in the common-emitter circuit configuration; signal power output is on the order of several hundred milliwatts. Base bias current is determined by emitter resistor R2 and by a series resistance made up of *bias control* R1, bypassed by C2, plus the D.C. resistance of the carbon microphone. A small capacitor, C1, is connected across the microphone (MIKE) to bypass hiss and noise. In addition to its role in establishing base bias, emitter resistor R2 serves to introduce a small degenerative signal voltage (negative feedback) which helps reduce distortion and to stabilize circuit operation; finally, R2 provides a maximum limit on emitter-collector current and thus acts to prevent thermal runaway. Output transformer T1 matches the transistor's moderate output impedance (24 ohms) to the low impedance (8 ohms) of the trumpet-type loudspeaker's voice coil, assuring an efficient transfer of the amplified signal. Operating power is supplied by a single 9-volt battery, B1, controlled by a SPST push-button switch (SW1).

The carbon microphone, while quite sensitive and capable of delivering a moderately high output signal, is a relatively noisy device. To avoid the disadvantages of these units, some manufacturers employ dynamic or magnetic cartridges, using a one or two stage preamplifier ahead of the power output stage to compensate for the lower sensitivity of the better quality microphones (see Section 2).

A Power Megaphone with an audio output of several hundred milliwatts is quite adequate for many industrial, commercial, and governmental applications. If the instrument is used where background noise levels are high, however, or where the maximum in voice projection is needed, a power output of from 3 to as high as 15 watts may be necessary. Units designed for these applications generally employ push-pull power amplifiers (instead of a single-ended stage); their circuits are essentially like those used in transistorized P.A. amplifiers (see Fig. 3-6).

The most common service complaints are those resulting from weak or defective batteries, from physical damage, or caused by exposure to extreme environmental conditions. Power Megaphones, although ruggedly built, are subjected to quite severe operating conditions. They may be used by inexperienced personnel, may be dropped, kicked, or slammed about, and, quite often, are used outdoors in rain, sleet, snow and dust. Referring to Fig. 3-2, *weak* or *distorted* operation may be caused by a defective battery, by misadjustment of R1, by leakage or an open in C2, by a defective microphone, or by a change in the transistor's characteristics after exposure to excessive heat (for example, during firefighting work). Excessive *noise* may be caused by a defective microphone, an open in C1, poor battery contacts, or an intermittent switch (SW1). Failure to operate may be caused by a dead battery, defective switch, or open circuit.

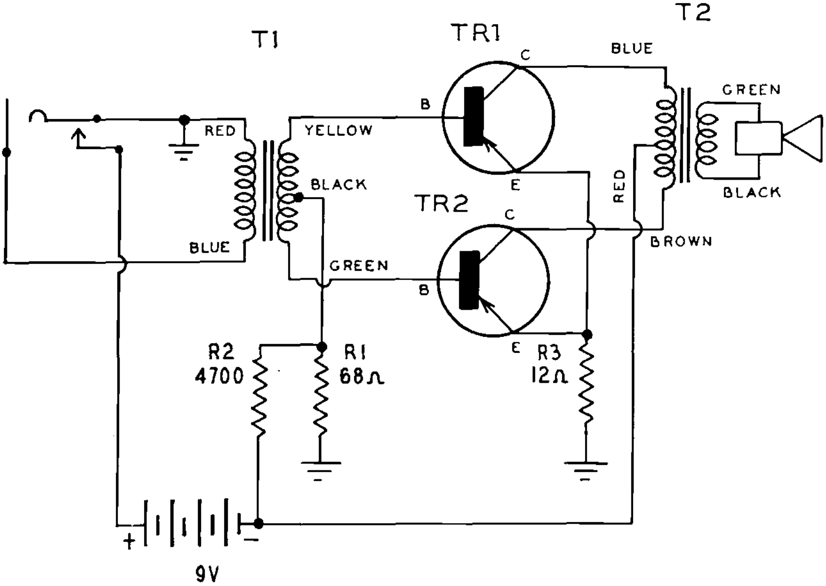

Fig. 3-3: Schematic diagram of a compact push-pull power amplifier. This unit, LAFAYETTE Model KT-96, is used as a booster amplifier for receivers designed for earphone operation.

BOOSTER AMPLIFIERS. Some pocket radio receivers, miniature tape recorders (see Section 9) and other types of transistorized equipment are designed for earphone output only. Occasionally, the user of such equipment finds it desirable to obtain loudspeaker operation. To meet this need, several manufacturers have introduced compact "Booster Amplifiers." These are essentially self-contained audio power amplifiers having built-in loudspeakers and operating on their own batteries. Their design permits their use as a direct electrical replacement for magnetic and dynamic earphones; this is important for, in some cases, the earphone serves as a transistor's output load. Most of these units deliver power outputs ranging from 100 milliwatts to slightly over 1.0 watt.

The Lafayette KT-96 Amplifier is a typical unit; its schematic diagram is given in Fig. 3-3, while interior and exterior views are shown in Figs. 3-4(a) and 3-4(b), respectively. Referring to the schematic, this instrument uses two medium power transistors (TR1, TR2) as a Class B push-pull power amplifier, both transistors are *PNP* units. A common-emitter configuration is used. In operation, base bias current is supplied through voltage divider R1-R2. Unbypassed emitter resistor R3 serves to correct for minor differences in the characteristics of the two transistors, thus insuring balanced operation and minimum distortion. Input transformer T1 matches the output impedance of the equipment with which the KT-96 is used to the input impedance of the push-pull amplifier and, by virtue of its center-tapped secondary winding, converts the single-ended "input"

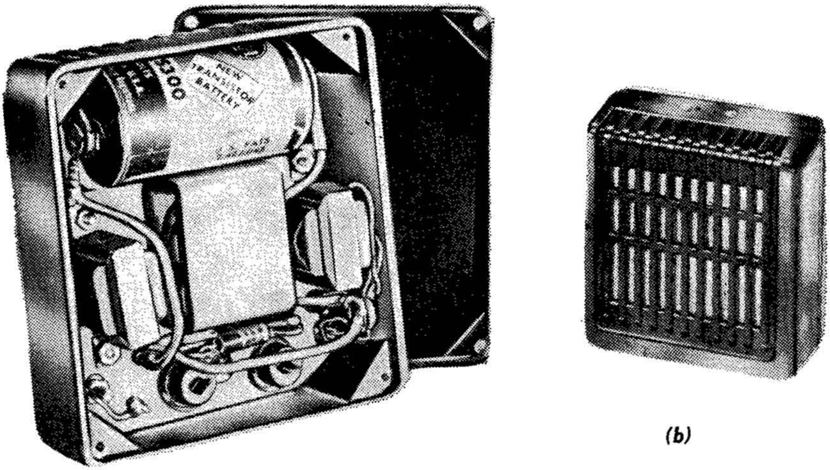

(a)

(b)

Fig. 3-4: Interior (a) and exterior (b) views of the LAFAYETTE KT-96 amplifier assembly.

signal into the push-pull signal required by the transistors; the output transformer, T2, matches the amplifier to the loudspeaker's voice coil winding. Operating power is supplied by a single 9-volt battery; a long battery life is insured by the use of a special open circuit input jack which serves to close the battery connection *only* when a miniature plug is inserted. Thus, battery switching is automatic and no separate "ON-OFF" switch is needed.

Aside from a defective battery, the most common service complaint is the result of improper operation rather than a defect in the amplifier itself. In an effort to obtain greater output volume, the user may "overdrive" the amplifier; this will happen if the *Volume* control of the equipment with which the KT-96 is used is turned *too high.* The result is *distortion.* Such a condition, in general, will not cause permanent damage, and normal operation can be restored simply by reducing the input signal level. After prolonged use, the input jack's contacts may have to be cleaned.

P.A. AMPLIFIERS. From a broad viewpoint, Public Address (P.A.) systems are employed for the same type of applications as are Power Megaphones; an individual uses the equipment to amplify his voice so that he can address a group, or can talk to persons spread over a wide area. Where similar audio power levels are involved, almost identical circuits are used in the two types of equipment. The differences, then, are in actual construction and in installation and operational details. Power Megaphones are self-contained units; the loudspeaker, microphone, and amplifier (and, frequently, the battery power pack) are assembled into a single piece of equipment which may be carried about by the user, *even while the gear is in operation.* P.A. systems, on the other hand, are made up of separate components; here, the loudspeaker(s), microphone, and amplifier are individual pieces of equipment which must be interconnected with appropriate cables *before* the system can be used. Thus, P.A. systems are intended for permanent or semi-permanent installations . . . even a *portable* P.A. system, for example, must be "set-up" (installed) before it can be used.

The Bogen Model BT12 is a typical P.A. amplifier. This unit is illustrated in Fig. 3-5; its schematic wiring diagram is given in Fig. 3-6. Measuring 6⅝″ x 3¾″ x 4⅜″ overall, the BT12 weighs only 3½ lbs. With a rated audio power output of 4 watts, the amplifier has a maximum gain of 102 db. It is designed for operation on any standard 12-volt D.C. power source (such as 12-volt automobile storage battery) and requires from 90 MA, at 0 watts output, to 600 MA, when delivering a full 4 watts. Its input circuit is designed to accept any standard low impedance (200 to 500 ohms) microphone.

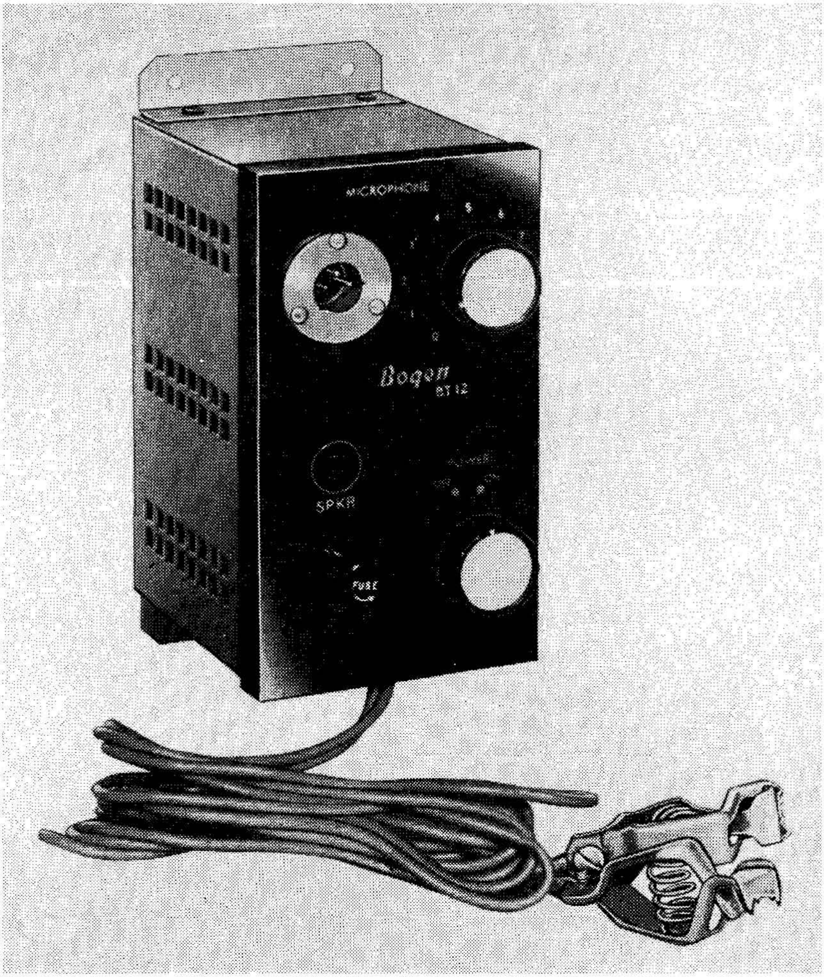

Fig. 3-5: The BOGEN Model BT12 P.A. amplifier, a fully transistorized unit delivering four watts.

Referring to Fig. 3-6, we see that the BT12 consists of a three-stage resistance-coupled preamplifier transformer-coupled to, and driving, a Class B push-pull power amplifier. The common-emitter circuit configuration is used in all stages. Low-level *PNP* transistor types are used in the preamplifier, with a pair of multi-watt *PNP* types in the output stage. A 100 ohm resistor and 100 Mfd. capacitor form a decoupling filter for the entire preamplifier, with additional R-C decoupling filters provided for each of the first two stages. Power supply and amplifier protection is provided by a 1 ampere fuse and a *thermostat* connected in series with the negative power line; in operation, the fuse protects against shorts due to insulation or component breakdown, while the thermostat prevents operation of the amplifier at high ambient temperatures (which might initiate thermal runaway). The thermostat is preset at the factory to "kick out" at 135° F.

Most commercially manufactured P.A. amplifiers employ circuits basically similar to that given in Fig. 3-6. Electrically, the chief differences encountered will be in the exact types of transistors used, with, of course, corresponding changes in component values. Different transistors may be used as a result of individual preferences, to obtain greater (or lesser) gain, to provide more (or less) power output, or to permit operation on different supply voltages. In some instances, a "mixer" circuit may be incorporated in the amplifier (see Section 2) to permit the use of several microphones (or of a microphone and record player) simultaneously.

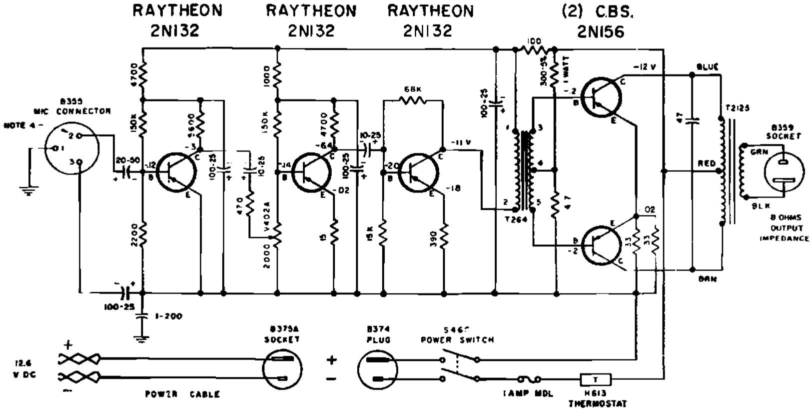

Fig. 3-6: Schematic wiring diagram of the BOGEN BT12 P.A. amplifier. PNP transistors in the common-emitter configuration are used in all stages.

While different amplifiers may be similar as far as basic circuitry is concerned, they may vary widely in mechanical design. Different types of input and output connectors may be employed; panel arrangements may differ; and various types of cabinets may be used. Often, a basic amplifier will be mounted in a portable carrying case together with a loudspeaker and built-in power supply, forming a complete portable system; such a system is shown in use in Fig. 3-7.

Unless P.A. amplifiers are subjected to excessive operating temperatures, connected to incorrect power sources, or physically abused in some other way, the chief service complaints encountered are the

Fig. 3-7: Using a transistorized portable PA system.

result of defects in "mechanical" components . . . switches, connectors, and so on. After years of operation, electrolytic capacitors can dry out or become leaky, and may have to be replaced. If the equipment is used in excessively damp or dusty areas, dirt or moisture accumulations can cause leakage, with a resulting deterioration of overall performance. Periodic cleaning and overall maintenance will prevent such trouble, however.

PHONOGRAPHS. The expression "portable record player" is often applied to *any* phonograph equipped with a carrying handle, regardless of its size, weight, or power requirements. Most of these units, in the past at least, were designed for A.C. power line operation, and, hence, were "portable" only in the sense that they could be carried. A truly portable electric phonograph, of course, like a portable radio receiver, should be completely self-contained. With transistors, such designs are feasible.

As a general rule, transistorized phonographs are smaller and lighter than tube-operated units; their turntables may be powered either by spring motors or by low-drain D.C. motors. Where battery-powered motors are used, the record player is usually designed to handle only the slower speed records (45, 33⅓, and 16⅔ RPM). Relatively short, light-weight tone arms are used, and these are fitted with *high output* crystal or ceramic pickup cartridges. Since comparatively high signal levels are available, fairly simple amplifier circuits are used, and most units employ only two to four transistors.

The amplifier used in the Philco Model TPA1 (and TPA2) portable phonograph is typical. The TPA1's schematic diagram is given in Fig. 3-8, with the etched circuit board amplifier itself shown

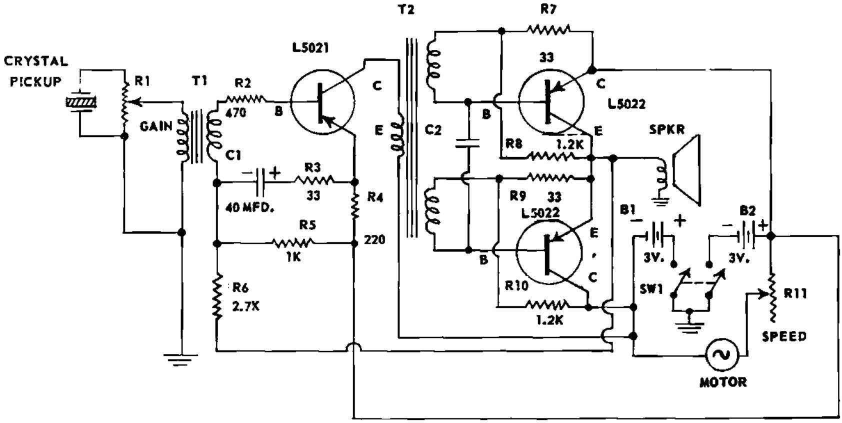

Fig. 3-8: Schematic wiring diagram of the PHILCO Model TPA1 transistorized phonograph. Powered by four 1.5 volt flashlight cells, this instrument features direct-coupling to the loudspeaker.

in Fig. 3-9; the *Volume* control (R1), loudspeaker (SPKR), motor *speed* control (R11), battery power supply (B1 and B2), and DPST "ON-OFF" switch (SW1) are mounted in the instrument's cabinet and are not part of the amplifier "chassis." SW1 is ganged to the tone arm to provide semi-automatic operation . . . power is used, then, only while a record is actually being played. The power pack is made up of four standard flashlight cells.

As we can see by reference to the schematic diagram, a two-stage transformer-coupled amplifier is used in the instrument. *PNP*

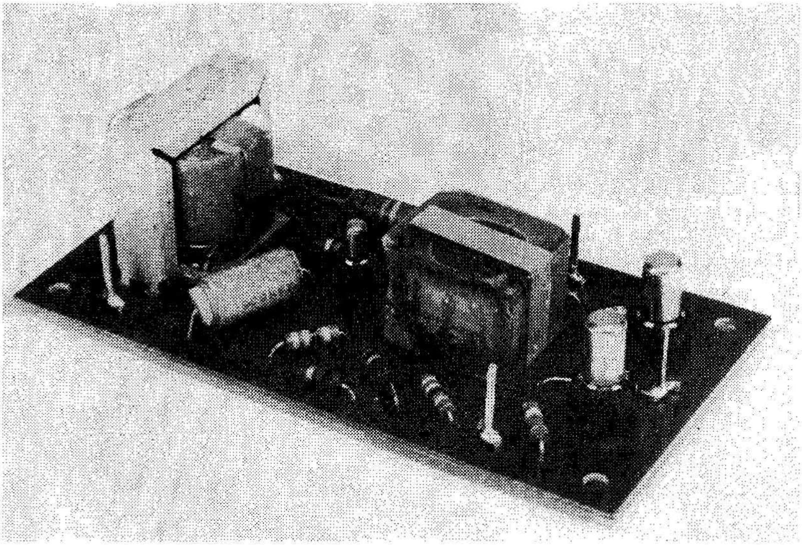

Fig. 3-9: The amplifier "chassis" used in the PHILCO TPA1 phonograph. All components are mounted on an etched circuit board.

transistors are used, with the common-emitter configuration employed in both stages. In operation, the signal obtained from the crystal pickup cartridge appears across *Volume* control R1 and, from here, is coupled through input transformer T1 to the first stage. T1 serves to match the high impedance of the pickup and volume control circuit to the transistor's moderately low input impedance. After amplification, the signal is coupled through T2 to a push-pull power output stage which, in turn, is *direct-coupled* to the PM loudspeaker. The output stage is rather unique, then, in that *no output transformer* is used. To permit this mode of operation, a "center-tapped" power supply (B1, B2) is used, and a two winding secondary is provided on the drive transformer (T2) to insure proper signal phasing.

The service complaints most often associated with transistorized phonographs are the result of defective batteries or of defects in the turntable and tone arm components. The small battery-powered motors used can deliver relatively little power; as a result, turntable speeds vary or may be much lower than normal with excessive loading or as dust and grease deposits accumulate. Generally, normal operation can be restored by a general cleaning and lubrication job and by the installation of fresh batteries. A complaint of *distortion* is often caused by a worn needle or defective phono cartridge. In the amplifier chassis itself, relatively little can go wrong . . . connections may break if the phonograph is dropped are subjected to other abuse, and, in damp areas, leakage paths can develop across the etched circuit board, but these defects can be corrected with standard maintenance procedure.

GENERAL PURPOSE AMPLIFIER. The schematic wiring diagram of Lafayette Radio's Model KT-104 (and KT-105) Audio Amplifier is given in Fig. 3-10. The circuit used in this instrument is typical of that found, with but minor changes, in many types of equipment (see paragraphs on **SPECIAL AMPLIFIERS** later in this Section). Using five *PNP* transistors, the KT-104 has a frequency response reasonably flat from 30 cps to 10 KC and a peak power output of 750 milliwatts. Equipped with independent *Treble* and *Bass* tone controls, the unit has enough gain to permit its use with magnetic phono cartridges; thus, the amplifier is suitable for low-power Hi-Fi applications.

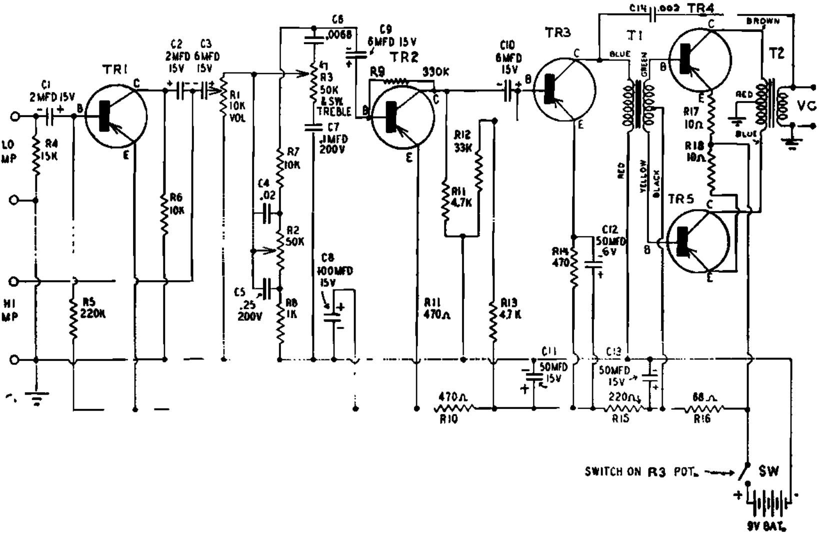

Fig. 3-10: Schematic wiring diagram of the LAFAYETTE Model KT-104 Audio Amplifier. Designed for Hi-Fi applications, this unit includes its own preamp circuit and delivers three-quarters of a watt output.

Basically, the KT-104 is a three-stage resistance-coupled preamplifier, with its last stage transformer-coupled to a Class B push-pull power output stage. The common-emitter circuit configuration is used throughout. Referring to Fig. 3-10, we see that two *inputs* are provided; the "LO IMP" input is for low-level, low-impedance devices, such as dynamic microphones and magnetic phono cartridges . . . the "HI IMP" input, which by passes the first stage (TR1), is for high-level pick-ups, such as crystal and ceramic cartridges. D.C. power is supplied by a single 9-volt battery, controlled by a SPST switch ganged to the *Treble* tone control (R3).

In operation, the signal appearing across input load resistor R4 is coupled through C1 to TR1's base electrode. TR1 is operated *without* externally applied base bias, and R5 serves as its base return resistor. The amplified output signal appearing across TR1's collector load R6 is coupled through C2 and C3 to *Volume* R1; two capacitors (C2 and C3) are used in series here to permit the application of an external signal from the "HI IMP" terminals while, at the same time, maintaining adequate D.C. isolation. From R1 the signal is applied to a tone control network consisting of *Bass* control R2, C4, C5, R7, R8, C6, *Treble* control R3, and C7, then through coupling capacitor C9 to TR2's base electrode. TR2's base bias is supplied through R9, connected back to its collector electrode; as we have seen earlier, this arrangement improves circuit A.C. and D.C. stabilization.

Continuing, the amplified output signal appearing across TR2's collector load, R11, is coupled through C10 to TR3's base. Bias for this stage is supplied by voltage divider R12-R13, working in conjunction with emitter resistor R14, by-passed by C12. TR3's amplified output signal is coupled through interstage transformer T1 to the push-pull output stage; T1 serves the dual purpose of matching TR3's output impedance to the moderate input impedance of the Class B amplifier and of providing the two oppositely phased signals needed to drive a push-pull stage.

Two medium power transistors, TR4 and TR5, are used in the power output stage. The small base bias required for minimum-distortion operation is supplied by the D.C. drop across R16, in series with the positive power bus. Unbypassed emitter resistors R17 and R18 serve to stabilize circuit performance and to insure balanced operation. The power stage is coupled through impedance matching transformer T2 to the instrument's *output* terminals . . . and, from here, to the voice coil (VC) winding of a standard PM loudspeaker. The chief difference between the KT-104 and KT-105 amplifiers is in the type of output transformer (T2) used . . . the KT-104 has a 3.2 ohm output, the KT-105 an 8 ohm output. Negative feedback is supplied from T2's secondary to T1's primary through coupling capacitor C14; this reduces harmonic distortion and improves overall amplifier performance. C13 serves as a bypass for series bias resistor R16. Decoupling for the entire three-stage preamplifier circuit is furnished by an "L" type filter made up of R15 and C11, with additional decoupling for the first two stages (TR1 and TR2) furnished by R10 and C8.

In general, the service complaints encountered in this type of amplifier are caused by the following defects, in order of importance . . . (a) defective batteries, (b) defective "mechanical" components, such as defective switches, noisy controls, and poor contact in connectors, sockets, and plugs, (c) leaky or partially open electrolytic capacitors, and, finally, (d) defective transistors or other circuit components caused by physical or electrical abuse. *Signal Tracing* is the most effective troubleshooting technique for isolating a defective stage, and *Sine-Wave* or *Square-Wave Analysis* the best techniques for checking overall circuit performance (see Section 10). Line-operated D.C. Power Supplies are excellent for bench tests of amplifiers of this general class; where the minimum in hum and noise levels is needed, an external Filter may be used with the Power Supply . . . see Fig. 3-11.

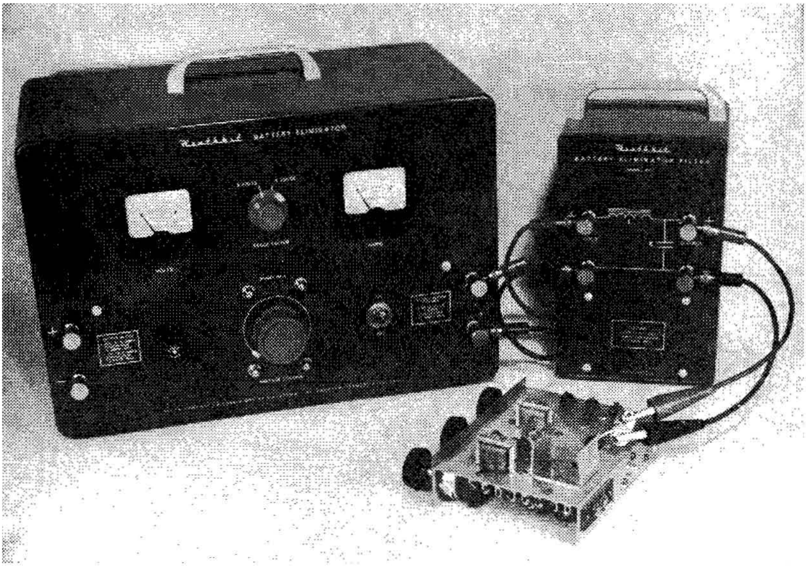

Fig. 3-11: Bench checking a transistorized audio amplifier. D.C. operating power is obtained from a HEATH BE-2 line-operated Battery Eliminator, with extra filtering provided by a BF-1 Filter to obtain minimum ripple. The amplifier shown is a LAFAYETTE type KT-104.

HIGH FIDELITY AMPLIFIERS. From design and construction viewpoints, the only real differences between Hi-Fi and "standard" audio amplifiers are the steps taken, in the former, to keep distortion levels to a minimum, to insure a flat, broad frequency response with good transient characteristics, and, finally, to eliminate hum, noise, and other undesired signals. In general, this means more care and attention to layout, better shielding, the use of higher quality components, and a more precise control of component values and specifications. Thus, the same type of circuit used in a P.A. Amplifier, as shown in Fig. 3-6, may be used in a Hi-Fi amplifier, provided suitable transformers are chosen, and special pains are exercised in the choice of exact component values and in circuit layout and lead dress. Occasionally, negative (or degenerative) feedback will be used to improve overall frequency response and to insure circuit stability.

There is one further difference between P.A. and Hi-Fi amplifiers at the practical level. In P.A. equipment, it is standard practice, as we have seen, to combine the "preamplifier" circuits on a single chassis. The preamp circuitry, in general, is relatively simple; only one or two types of "inputs" are provided, and tone controls, if used at all, are of the simplest variety. In Hi-Fi equipment, by contrast, the preamp and power amplifiers are often assembled as separate piece of equipment, and preamp circuitry is quite complex, with a variety of "inputs" available, with separate *Treble* and *Bass* tone controls provided, and with special circuitry to insure proper frequency response equalization for each type of equipment (pick-ups, Tuners, Tape Decks, etc.) used as signal sources. Hi-Fi Preamps are discussed in detail in Section 2.

The large currents and low voltages used in transistor power amplifiers make Hi-Fi transformer design extremely difficult . . . and the resulting components quite large and expensive. To avoid magnetic saturation on current peaks, a considerable amount of iron must be used in the transformer cores; in addition, relatively large wire must be used in the windings to keep D.C. resistances (and resulting D.C. voltage drops) to a minimum. These considerations have led a number of manufacturers to design *transformerless* Hi-Fi power amplifiers. A typical amplifier circuit of this type is shown in Fig. 3-12. Such an amplifier is used in conjunction with a standard Hi-Fi preamp.

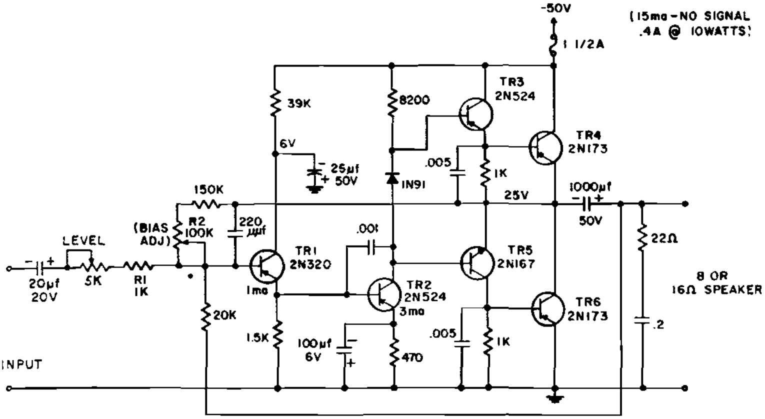

Fig. 3-12: Schematic diagram of a basic 10 watt Hi-Fi audio amplifier. This unit is designed to use an external power supply and a separate preamplifier. For suitable preamp circuits, see Section 2. A suitable power supply circuit is given in Fig. 3-14(b).

Referring to the schematic diagram, low-level transistors are used for three of the stages and multi-watt power transistors for the output stage; in practice, the latter units (TR4 and TR6) are normally mounted on a suitable heat sink. The first stage, TR1, is a *PNP* transistor used as a common-collector (or *emitter-follower*) amplifier, with a 1.5 K resistor serving as its load. The signal appearing on its emitter electrode (across the 1.5 K resistor) is direct-coupled to the second stage, TR2, a Class A common-emitter driver using a *PNP* transistor. TR2's amplified output signal, in turn, is direct-coupled to a push-pull phase-inverter stage using *PNP* (TR3) and *NPN* (TR5) transistors. Phase inversion takes place due to the complementary characteristics of *PNP* and *NPN* types. The 1N91 diode used as part of TR2's load is included for temperature compensation and to adjust the drive level to TR5 to compensate for slight differences in its characteristics (as compared to TR3); thus, the diode serves as load resistor rather than as a rectifier or detector and, in fact, can be replaced with a small fixed resistor if temperature compensation is not needed. The output signals appearing across the phase inverter's 1K load resistors are direct-coupled to the Class B push-pull power amplifier stage (TR4 and TR6). Note the similarity of this stage to the one used in the Phonograph Amplifier described earlier (Fig. 3-8). Finally, the amplified signal supplied by the power stage is coupled through a 1,000 Mfd. D.C. blocking capacitor to the loudspeaker's voice coil.

Several compensation circuits are included to insure good circuit stability, to prevent thermal runaway, and to keep distortion to a minimum while maintaining a flat overall frequency response. The 5K *Level* control is a semi-fixed adjustment rather than a "Volume" control; it is preset according to the type of preamplifier used with the amplifier, and is adjusted to prevent overdrive. The 100 K bias adjustment control (BIAS ADJ) is preset so that *half* the D.C. supply voltage appears across TR6, insuring proper balance in the power and phase inverter stages. The 220 MMF capacitor across the bias control network, the 0.001 Mfd. capacitor between TR2's base and collector, and the 0.005 Mfd. capacitors connected across the phase inverter's load resistors are included to reduce the amplifier's response to high frequency (above 30 KC) signals and thus to reduce the possibility of overdrive at these frequencies which could initiate thermal runaway. A series network consisting of a 22 ohm resistor and a 0.2 Mfd. capacitor is shunted across the amplifier's output (that is, in parallel with the loudspeaker's voice coil) to compensate for phase shift beyond the audio spectrum caused by the inductive characteristics of the speaker's voice coil winding. Finally, a 20K resistor is connected between the amplifier's "output" and TR1's base to supply inverse (negative) voltage feedback.

This amplifier is designed for operation on a 50 volt D.C. power supply and requires from 15 MA under "No Signal" conditions to 400 MA when delivering its rated output of 10 watts.

From a servicing viewpoint, Hi-Fi amplifiers suffer from the same types of defects as do the P.A. and General Purpose amplifiers discussed earlier, and can be checked in much the same way. Since high quality components are used in most commercially manufactured Hi-Fi equipment, major defects are less likely to occur; on the other hand, Hi-Fi gear (and its owners) may be less tolerant of minor defects which can cause a slight deterioration of overall performance. As a general rule, Hi-Fi equipment should be given an *overall performance check* whenever repairs are made; this check should include quick tests of such characteristics as *frequency response, power output,* and *distortion.* When transformerless amplifiers are bench-tested, power supply currents should be carefully monitored; this step is especially important when maximum power, high frequency, sine-wave tests are conducted. A gradual increase in current requirements may indicate the start of thermal runaway.

STEREOPHONIC SYSTEMS. Multiple channel audio systems are becoming increasingly popular among audiophiles, good music lovers, and other Hi-Fi enthusiasts. By providing two (or more) sound sources, such systems add the quality of *spatial perspective* to reproduced sound and create the illusion of *depth.* This adds increased realism . . . the various instruments in an orchestra, for example, *sound as if* they were located in different parts of the room, just as they do at a "live" concert; in a conventional Hi-Fi system, all the instruments seem to be squeezed into a single spot (the loudspeaker-enclosure system). Since the quality added to the reproduced music is roughly analogous to that added to a picture by a stereoscope, such systems are called *stereophonic* (or, simply, *stereo*) installations. This is a coined term meaning "solid-sound." Another expression used to describe such systems is *binaural* (meaning, "two-eared"); by contrast, a conventional Hi-Fi installation is called a *monaural* system.

Theoretically, any number of channels may be used in a stereo installation, but most home systems use two channels; theater systems may employ three, five, or seven channels. A typical two channel system is illustrated in block diagram form in Fig. 3-13. Each channel includes a preamp, power amplifier, and loudspeaker-enclosure assembly. Individual or common power supplies may be used, depending on personal preferences. The input signals supplied to such an installation may be obtained from a dual-output stereo phono cartridge, from a dual-channel tape playback deck, or from a stereo radio tuner.

As far as transistor circuitry is concerned, there is no difference between the type of equipment used in a stereo installation and that used in a conventional Hi-Fi system; the preamp circuits used are essentially like those described in Section 2, and the power amplifiers employed are similar to those discussed earlier in this Section. Each item of equipment is simply duplicated. Occasionally, a manufacturer may assemble *two* preamps (or two power amplifiers) on a single chassis or in a single cabinet specifically for stereo installations; where this is done, standard practice is to provide a common power supply and to "gang" the tone and volume controls, generally by means of concentric shafts.

The service complaints encountered in stereo installations . . . and troubleshooting techniques used . . . are like those encountered in single channel Hi-Fi installations. When servicing a stereo system, however, one final check is needed . . . the system should be "balanced" so that each channel is delivering the same power output. This is accomplished by adjusting appropriate "level" or "balance" controls on the equipment itself for equal output indications on a suitable test meter. An Audio Output Meter may be used for this test where identical speaker systems are used for each channel, a Sound Level Meter may be used where different speakers are employed.

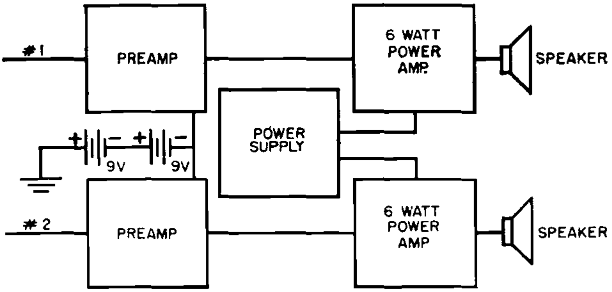

Fig. 3-13: The basic components of a STEREOPHONIC installation are shown here in block diagram form. Two complete audio channels are provided. The input signals may be obtained from a stereo phonograph, a tape playback machine, or radio tuners.

SPECIAL AMPLIFIERS. Slightly modified versions of the basic audio amplifier circuits given in Figs. 3-2, 3-3, 3-6, 3-10 and 3-12 may be used in a number of different types of equipment. Generally, the modifications used do not alter basic circuit operation; instead, they simply adapt the basic circuit to handle specific jobs. Typical modifications may be changes in the type of signal source or output load, the addition of switching or control circuits, and minor changes in component values to obtain different values of gain or power output, or, in some cases, a variation in frequency response. Let's examine typical special purpose amplifiers to see how the circuits discussed earlier are used . . .

Electronic Organs use multi-watt audio amplifiers similar to those used in Hi-Fi installations. The modifications include . . . (a) the substitution of electromechanical or electronic tone generators in place of a phono cartridge or Tuner signal source, and (b) an elaboration of the tone control circuits to permit a greater variation in frequency response characteristics.

Guitar Amplifiers or other *Musical Instrument Amplifiers* employ circuits like those used in P.A. amplifiers and Hi-Fi systems. The chief modification is the substitution of a contact microphone or magnetic pickup for a standard microphone. In most cases, of course, a Guitar Amplifier, its loudspeaker, and its power supply are mounted together in a single portable carrying case.

Intercom Amplifiers used in homes and offices are designed around circuits similar to that shown in Fig. 3-10. The modifications include . . . (a) the omission of the tone control network, and (b) the addition of input and output switching to permit the amplifier's output to be fed to any of several loudspeakers and to permit any loudspeaker to serve as an input signal source (microphone).

Laboratory or *Instrument Amplifiers* use circuits similar to those shown in Figs. 3-6 or 3-10, depending on the output power levels needed. Any of many modifications may be used, depending on the amplifier's specific application; often, circuit modifications are made "on the spot." Generally, instrument *transducers* are used in place of a microphone as a signal source, and the amplifier's output may be fed to a recording device instead of a loudspeaker. Tone control circuits are usually omitted, but the amplifier's basic frequency response may be altered by small filters to emphasize (or cancel) certain frequencies.

Paging and Talkback Amplifiers are similar in application to Intercom Amplifiers. Here, circuits similar to those used in P.A. systems are employed, but with the addition of suitable input and output switching networks. In contrast to a small Intercom, which may require a power level of only a few hundred milliwatts, a Paging Amplifier may require from 3 to as high as 50 watts.

Radio Transmitter Modulators (see Section 9) use circuits like those found in P.A. amplifiers (Fig. 3-6), but with the output transformer replaced with a modulator transformer to match the transmitter with which they are used.

Servo Systems (see Section 9) use amplifiers delivering from 3 to as high as 100 watts. Their basic circuits are similar to those used in P.A. installations, but their output load is generally a small motor instead of a loudspeaker. Often, a Servo Amplifier has a much narrower frequency response than a standard audio amplifier.

Signal Tracers use circuits similar to the one given in Fig. 3-10, but with the tone control network omitted. An R.F. Detector Probe is used for tests in I.F. and R.F. circuits; a shielded direct probe with a series blocking capacitor for tests in audio circuits. Often, an A.C. Voltmeter will be connected in parallel with the instrument's loudspeaker to serve as a visual output indicator.

Tuned Amplifiers are used as null indicators or for industrial control work. The basic circuits used may be similar to those given in Figs. 3-6 or 3-10, depending on the power levels needed. Bandpass filter networks are added between stages to limit the amplifier's frequency response characteristic.

If we exclude troubles in the auxiliary equipment with which special purpose amplifiers are used, service complaints are caused by defects identical to those encountered in corresponding types of audio amplifiers, and similar troubleshooting methods may be used. This is not too surprising, of course, in view of the similarity of circuits.

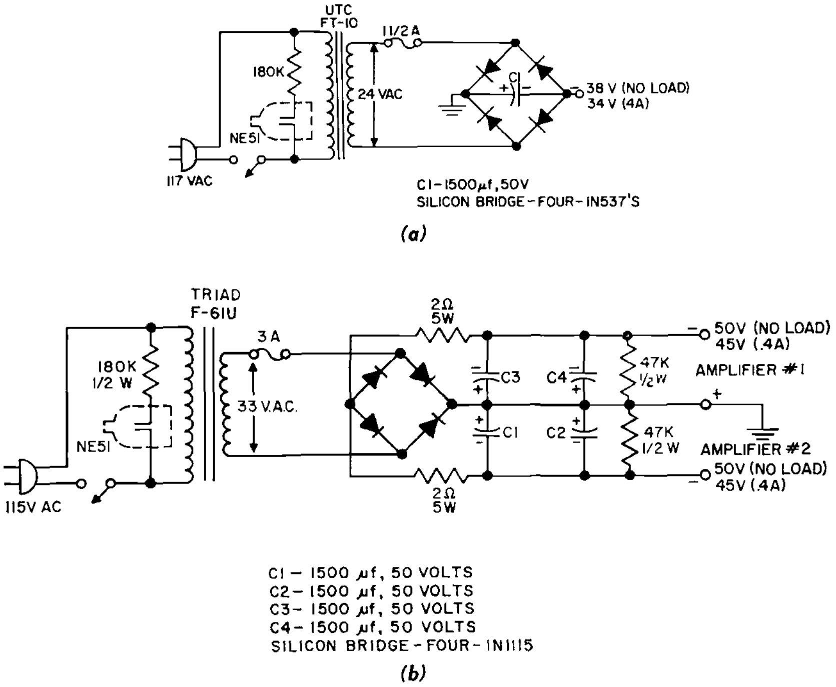

(a)

(b)

Fig. 3-14: Schematic wiring diagrams of Power Supplies designed for use with transistorized audio amplifiers. The circuit shown at (a) has a single output; the circuit at (b) has two isolated outputs and may be used to power the dual amplifiers needed in stereo installations. In critical applications a filter choke and additional capacitor may be added to reduce ripple to an absolute minimum.

When servicing such equipment, then, one of the first steps is to check out any auxiliary gear used with the basic amplifier . . . such as transducers, probes, recorders, and so on. Afterwards, the amplifier itself may be tested using the standard techniques discussed earlier (as well as the techniques described in Section 1), together with the *Troubleshooting Charts* given at the end of this Section.

AMPLIFIER POWER SUPPLIES. All transistorized equipment may be operated with suitable battery power packs. Battery operation is preferred, of course, for portable equipment and, often, for permanently installed units have very low current drains* or instruments extremely sensitive to hum or noise, such as high gain preamplifiers and some types of instrument amplifiers. On the other hand, if the equipment requires relatively high currents . . . such as P.A. amplifiers, Hi-Fi systems, and similar gear . . . and is permanently installed in a home, factory, or office, A.C. power line operation is much more economical and convenient than batteries.

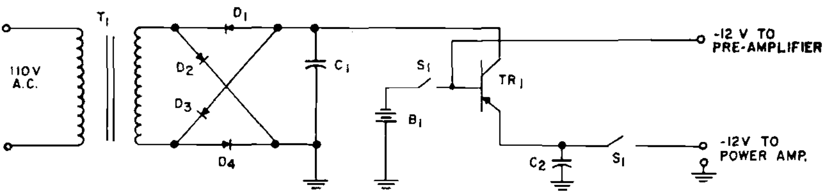

TR_1 - POWER TRANSISTOR (MOUNT ON HEAT SINK) C.B.S. 2N256, 2N156 OR EQUIVALENT.
S_1 - D.P.S.T.
T_1 - STANCOR P-6469 117VAC TO 25.2 OR EQUIVALENT
D_1, D_2, D_3, D_4 - GENERAL ELECTRIC IN91 GERMANIUM RECTIFIERS
C_1, C_2 - 50 µfd, 50 VOLT
B_1 - 3, 4 VOLT MERCURY CELLS IN SERIES, MALLORY TR-233R OR EQUIVALENT

Fig. 3-15: Circuit of a REGULATED power supply. Here, a power transistor (TR1) is used as a series current regulator, improving circuit operation and reducing ripple.

The schematic diagrams of three line-operated power supplies designed for use with multi-watt audio amplifiers are given in Figs. 3-14(a), 3-14(b), and 3-15. The circuit shown in Fig. 3-14(a) supplies from 38 volts (D.C.) under no load conditions to 34 volts when supplying its rated output of 400 MA; it consists of a step-down transformer, ON-OFF switch, bridge-type rectifier, and a single filter capacitor (C1) . . . a simple neon pilot lamp is connected across the transformer's primary (along with a small series current limiting resistor). The circuit given in Fig. 3-14(b) is similar, except that *two outputs* are provided for the operation of two independent amplifiers in a stereo installation; here, the output voltage ranges from 50 volts (no load) to 45 volts with a drain of 400 MA. In the second

---

*Where battery life may equal its normal "shelf" life.

circuit, small series resistors and additional filtering are added to prevent cross-coupling between the two amplifiers through the power supply circuit. Both circuits are fused for protection against overloads and accidental shorts.

The power supply circuit shown in Fig. 3-15 is designed for use with amplifiers requiring good voltage regulation. As in the other circuits, a step-down transformer, a full-wave bridge rectifier, and a large filter capacitor (C1) serve as a basic D.C. source. However, in order to improve voltage regulation, a power transistor (TR1) is used as a series regulator, with small mercury batteries (B1) serving to supply a reference control voltage; these batteries also serve to stabilize the voltage supplied to a preamplifier. Since relatively little current is drawn from the mercury batteries, their operating life is equal to their normal "shelf" life. C2 serves as an output filter. Separate switches are provided for both the preamplifier and power amplifier outputs.

Power supply service complaints are similar to those encountered in any type of line-operated power supply, whether designed for use with transistorized or tube-operated equipment. The most common defect, of course, is a defective filter capacitor. An open capacitor can cause excessive ripple and hum; a leaky capacitor will cause a drop in output voltage and overheating. Basic troubleshooting procedures are Voltage Analysis and Parts Substitution Tests.

TROUBLESHOOTING CHARTS

The block diagram given in Fig. 3-16 may be applied to virtually any type of audio amplifier, whether used in a Power Megaphone, P.A. system, or Hi-Fi installation. It is useful for analyzing circuit operation and for determining suitable test procedures. Referring to the diagram, the POWER AMPLIFIER may be a single transistor or a pair used in push-pull; similarly, the DRIVER STAGE may be a single unit or a pair in push-pull. One or more PREAMP STAGES may be used, depending on the equipment and its application. Finally, the POWER SUPPLY may be batteries or a line-operated power source. In some cases, the functions of the PREAMP and DRIVER may be combined in a single stage; in still others . . . as, for example, the circuit given in Fig. 3-2 . . . the functions of *all three* sections may be combined in a single transistor. In general, however, the PREAMP serves to boost the weak incoming signal to a sufficient level to operate the driver; the PREAMP STAGES are often called "gain" stages. Next, the DRIVER takes this signal and, serving as a low power amplifier, furnishes a signal adequate to drive the POWER stage. Multiwatt Class B amplifiers, for example, may require as much as 50 to 100 milliwatts drive. Finally, the POWER

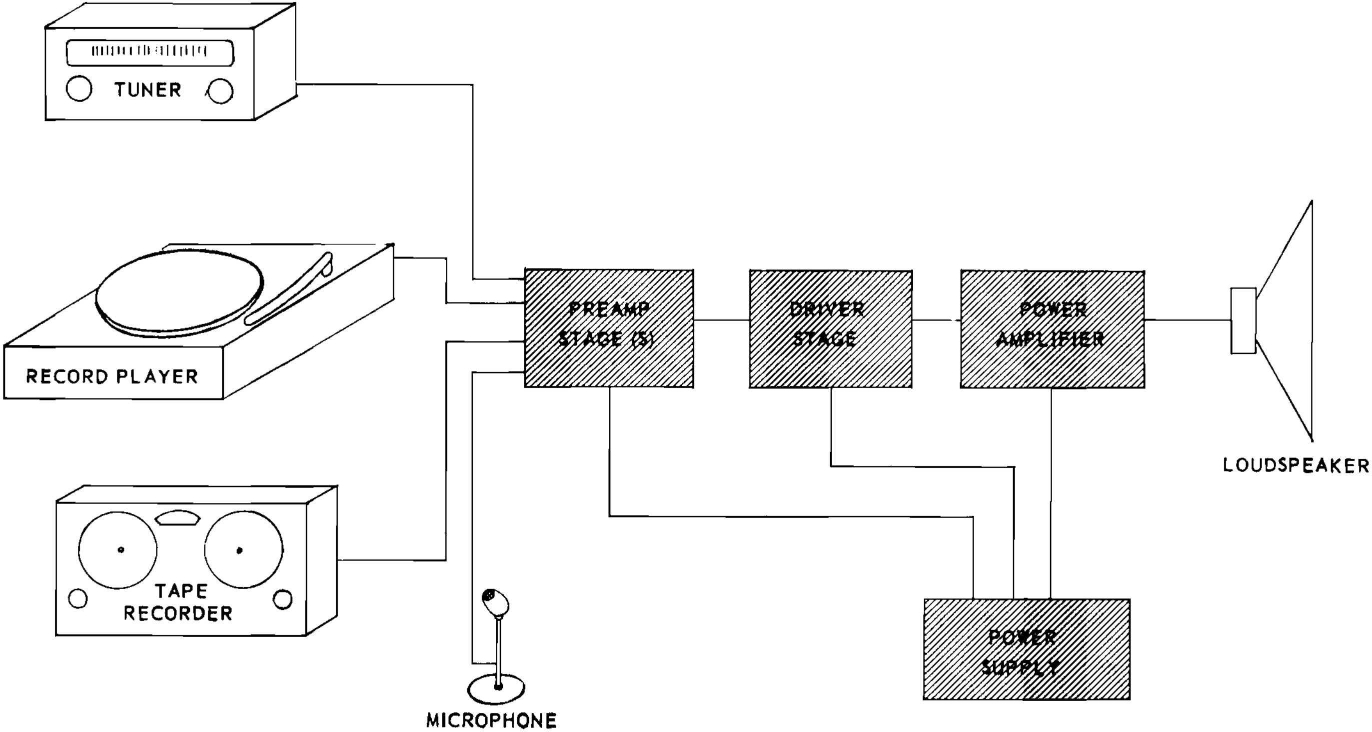

Fig. 3-16: A general block diagram which can be applied to ALL types of transistorized audio amplifiers. Not all instruments will include all the stages shown. In some amplifiers, for example, the "preamp" and "driver" functions may be combined in a single stage; in others, batteries may be used in place of the line-operated "power supply." Some amplifiers may have but a single input ("Microphone" for example).

AMPLIFIER gives the signal the final boost needed, and delivers its output to the load (Loudspeaker, for example).

Any of several devices may furnish an input signal . . . four are shown: *Microphone, Tape Recorder, Record Player* and *Tuner.* In some equipment . . . a Hi-Fi system, for example . . . all four may be provided. In other types of gear, only one may be used; in a P.A. installation, for instance, only a Microphone may be employed.

Audio amplifier *Troubleshooting Charts* are given in Tables 3-A, 3-B, 3-C, 3-D, and 3-E. These are designed to apply to any of the audio amplifiers discussed in this Section, as well as to special purpose amplifiers which are based on audio amplifier circuitry. Table 3-A outlines basic troubleshooting procedures for isolating troubles causing common complaints; it may be used in conjunction with the

ISOLATION TESTS → COMPLAINT AND DESCRIPTION ↓	CHECK POWER SUPPLY	CHECK PREAMP	CHECK POWER AMP.	CHECK PICK-UP OR MICROPHONE	CHECK LOUDSPEAKER	TEST TECHNIQUES See Section 1
DEAD ("Doesn't work")	1	3	2	4	2a	Voltage or current measurements; Signal Injection; Check transistors.
WEAK "Low Volume"	1	3	2	4	5	Voltage or current measurements; Apply test signal and use Signal Tracer to check gain of individual stages. Check transistors.
NOISE (or Hum)	1	2	3	4	5	Try by-passing power supply or battery with large electrolytic capacitor; use Signal Tracing to isolate; check shielding.
OSCILLATION Squealing, perhaps motorboating	1	2	3	4	5	Try substitute filter and by-pass capacitors; check shielding; Voltage (or current) measurements to see if all stages are normal; use Signal Tracing to isolate.
INTERMITTENT "Works now and then"	4	2	1	3	1a	Wriggle interconnecting leads; check for loose components in sockets, or for broken connections using "Brute Force" technique.
MICROPHONIC Squeals on peaks	3	1a	2	1	4	Check for loose connections; tap components with eraser tip of pencil to isolate; pay particular attention to input circuits and pre-amp.
DISTORTION Sound garbled	1	3	2	5	4	Apply test signal to input, checking each stage with Signal Tracer or Oscilloscope; check operating Voltages (or current) Check transistors.

TABLE 3-A: ISOLATION TEST TROUBLESHOOTING CHART — Use this chart as a guide when isolating trouble to a specific stage or section. Check the various sections in the numerical order shown for various basic complaints. Make the checks identified by letters (1a, 2a, etc.) ONLY if necessary... see text for details. Refer to Section 1 for information on basic test techniques (Signal Tracing, etc.).

PROBABLE DEFECTS	CAPACITORS				RESISTORS				TRANSISTOR			DEFECTIVE TRANSFORMER	DEFECTIVE SPEAKER	DEFECTIVE PICK-UP	NOTES
DISTORTION COMPLAINT	BY-PASS OPEN	BY-PASS LEAKY	COUPLING OPEN	COUPLING LEAKY	BASE BIAS RES.	EMITTER RES.	HIGH VALUE LOAD	LOW VALUE LOAD	UNBALANCED PP	WEAK	LEAKY				
Sound garbled		*		*	●				*		*		●	●	
Weak and garbled	*	*		*		●				●	*			●	
Distortion only at low volume				●	●	●			*						
Distortion only at high volume		●		*	●		●		*	*	*		●		
Poor low frequency response	*		*					●				●			
Poor high frequency response	*						●								
Peaks clipped		*		*	●		●			*	*				

TABLE 3-B: DISTORTION COMPLAINT TROUBLESHOOTING CHART — Use this chart as a guide where the customer complains . . . "the amplifier works, but not quite right." Common defects are identified by an asterisk (*); less common defects which can cause the same complaint by a large dot.

PROBABLE DEFECT → / NOISE COMPLAINT ↓	OPEN FILTER	OPEN BY-PASS	SCINTILLATION IN CAPACITOR	NOISY RESISTOR	NOISY CONTROL	NOISY TRANSISTOR	VOLTAGE BREAKDOWN IN TRANS.	DEFECTIVE SHIELDING	POOR CONTACT IN SOCKET OR CONN.	ARC IN TRANSFORMER	GROUND LOOP	REMARKS
HUM	*	●						*	●		●	
Noise when control is used					*							
Crackling sound			*							●		
Hiss or rushing		●		●		*		●	●		●	
Pops, snaps			*				*		●	●		

TABLE 3-C: NOISE COMPLAINT TROUBLESHOOTING CHART — Where the complaint is "hum," "hiss," or a similar noise, use this chart to identify possible sources of trouble. As before, the more common defects are identified with asterisks (*).

PROBABLE DEFECTS → / POWER SUPPLY COMPLAINT ↓	CAPACITORS								OTHER DEFECTS							NOTES
	High Power Factor	Scintillation	Open Input Filter	Leaky Input Filter	Shorted Input Filter	Open Output Filter	Leaky Output Filter	Shorted Output Filter	Shorted Choke or Res.	Open Choke or Res.	Open Transformer	Defective Rectifier	Shorted Transformer	Overload	Defective Switch	
Low Output Voltage			●	*			*					●		●		
High Output Voltage									*							
Hum in output	*		*			*			●			●		●		
Noise in output		*										*				
Feedback through power supply	*					*										
No output					*			*		*	●	●	●		●	
Overheating				*			*						●	*		
Blows fuses					*			*					●	●		

TABLE 3-D: POWER SUPPLY TROUBLESHOOTING CHART — Where supply voltages are obtained from a line-operated power supply instead of batteries, the power supply itself may be a source of trouble. Here, common power supply complaints and corresponding defects are listed.

CHECK FOR	PROCEDURE
Distortion	Using Audio Generator, apply sine-wave signals @ 50, 100, 500, 1,000, 5,000 and 10,000 cps. Observe input and output on Oscilloscope, noting any deviation in wave-form. Vary input level from minimum to specified maximum at each frequency. Adjust Loudness, Level and other controls over operating range.
Frequency Response	I. Using Square-Wave Generator as signal source and Oscilloscope to check output wave-form, check performance with 50, 100, 1,000 cps signals, watching for excessive rounding of high frequency signals, tilt of low frequency signals. II. Use Audio Generator as signal source, applying sine-wave signals over range from 50 cps to 20 KC. Keep input signal constant, checking output level with VTVM or Oscilloscope. With either test technique, adjust tone controls over full range, noting changes in equipment operation.
Transient Response	Use Square-Wave Generator and Oscilloscope. Check with 1 KC and 5 KC signals, watching for overshoots.
Power Output	Use Audio Generator as signal source. Connect 20 watt resistor across output terminals...value equal to loudspeaker impedance. Measure power output using VTVM and formula ($P = E^2/R$) with normal input and maximum signals.
Stereo	In addition to basic tests outlined above, check system for overall balance, using Output Meter.

TABLE 3-E: HI-FI CHECK CHART — When servicing high fidelity audio gear, the equipment should be given a quick check of overall performance whenever major repairs are made. These checks serve to "catch" obscure defects which may not be apparent in a routine operational test. Use this chart as a guide for checking such equipment. For detailed information on square-wave tests, refer to Section 10.

general block diagram given in Fig. 3-16. The different sections of the amplifier system are checked in the numerical order given for each of the major complaints. Where a letter subscript is used, it means that the section identified may be checked simultaneously with another section; for example, if the complaint is DEAD, the Power Amplifier and Loudspeaker will be checked out *together* if a sound is heard from the speaker when a test signal is applied to the Power Amplifier's input (using the Signal Injection Test). Tables 3-B and 3-C outline typical component defects causing various "Distortion" and "Noise' complaints, respectively, and are useful for isolating a defect to a specific component. Table 3-D is used as a guide for troubleshooting line-operated Power Supplies. Finally, table 3-E serves as a check-list for overall performance tests of High Fidelity equipment; as mentioned earlier, all Hi-Fi gear should be given a general check whenever major repairs are made.

Section 4

SERVICING "HYBRID" PORTABLE RECEIVERS

THE TRANSISTOR was invented well over a decade ago. The first unit was a hand-made *point-contact* type, consisting of a minute block of germanium and two very fine, closely-spaced "cat's-whisker" wire leads; the small block of semiconductor served as the *base,* with the wire tips held against it under spring pressure and serving as the *emitter* and *collector* electrodes. This type of construction was also used in the first commercially manufactured (mass-produced) transistors.

Now obsolete, the point-contact transistor had high gain, was quite efficient, and could be used at both R.F. and audio frequencies. Some of the early types, for example, could be used as oscillators at frequencies up to 50 MC. But the point-contact transistor was noisy, unstable, of varying electrical characteristics, and, because it was difficult to manufacture, very expensive. As a result, this type of transistor was used in relatively limited quantities; it found its way into a few types of high-priced special purpose military and industrial equipment but, for practical purposes, was never used in mass-produced products intended for the commercial market.

Introduced in 1951, some three years after the invention of the point-contact type, the *junction* transistor offered most of the advantages of the earlier type and few of its disadvantages. Essentially a three-layer "sandwich" of alternate *P* and *N* type semiconductors, this new type had low noise, was quite stable, could be made with consistent characteristics, and, most important, was relatively inexpensive to manufacture. But the junction type had one disadvantage . . . at least in its early forms . . . with greater interelectrode capacities and somewhat lower gain than point-contact types, this unit could not be used effectively at R.F. frequencies; it was essentially an audio transistor. Nevertheless, its advantages outweighed its one

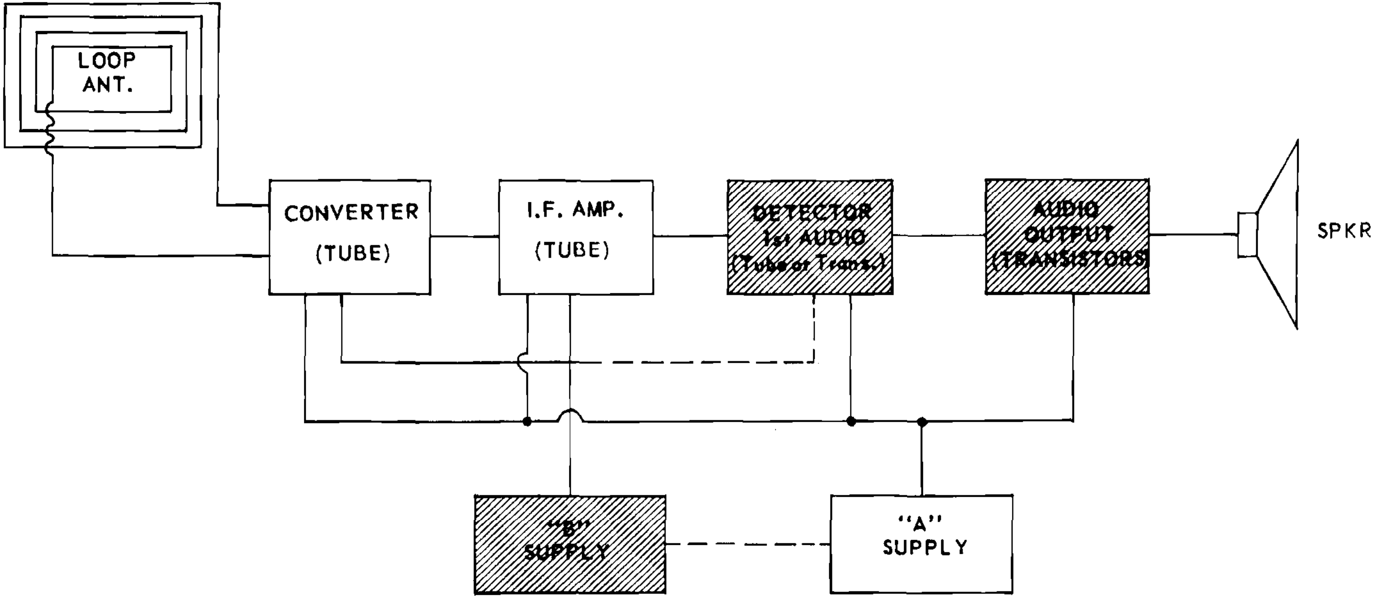

Fig. 4-1: Block diagram of typical "hybrid" portable radio receivers. Tubes are used in the R.F., I.F. and (often) first audio stages; transistors in the audio output stage. In some sets, transistors may be used in the entire audio system. In a few sets, a transistorized "B" (high voltage) power supply may be used in place of "B" batteries.

drawback and mass-production of junction transistors was started in 1952, and has continued to the present day. As we have seen, junction transistors soon found their way into all types of low-level audio equipment and, here at least, completely supplanted the subminiature vacuum tube (see Section 2).

Radio receiver manufacturers, anxious to take advantage of the transistor's small size, light weight, long life, and low power requirements, and, in a sense, to "cash in" on the transistor's favorable publicity in the public press, were confronted with a major "stumbling block" in the unit's limited R.F. capabilities. A solution to this problem was found in the development of *"hybrid"* receiver designs; with this approach, subminiature *vacuum tubes* were used in the equip-

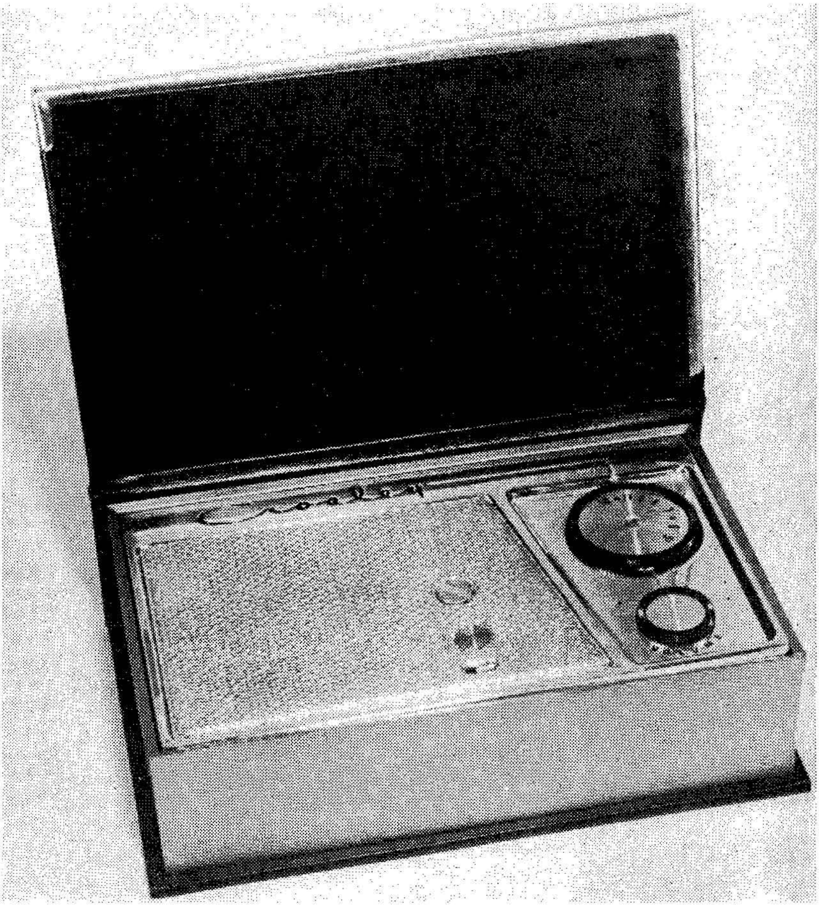

Fig 4-2: CROSLEY's "Book Radio" — a popular hybrid receiver.

ment's R.F. and I.F. stages and *transistors* in the audio section. Hybrid circuits, then, are those using *both tubes and transistors.*

The basic circuit used in typical hybrid portable radio receivers is shown in block diagram form in Fig. 4-1. Exterior and interior views of the Crosley "Book" Radio, a typical hybrid set, are given in Figs. 4-2 and 4-3, respectively. Referring to the diagram (Fig. 4-1), vacuum tubes are used in the receivers CONVERTER and I.F. AMPLIFIER stages and, often, in the 2nd DETECTOR and FIRST AUDIO stages as well. Transistors are used in the AUDIO OUTPUT stage, and, occasionally, in one of the preceding audio amplifier stages. A low voltage "A" battery supplies filament power to the vacuum tube stages and bias and operating currents to the transistor stage(s). High voltage "B" batteries supply plate and screen voltages to the tubes. In a few sets of foreign manufacture, a transistorized "B" supply was used as a substitute for separate high voltage batteries; these sets required only "A" batteries (supplying from 1.5 to 6.3 volts, depending on circuit design) for operation.

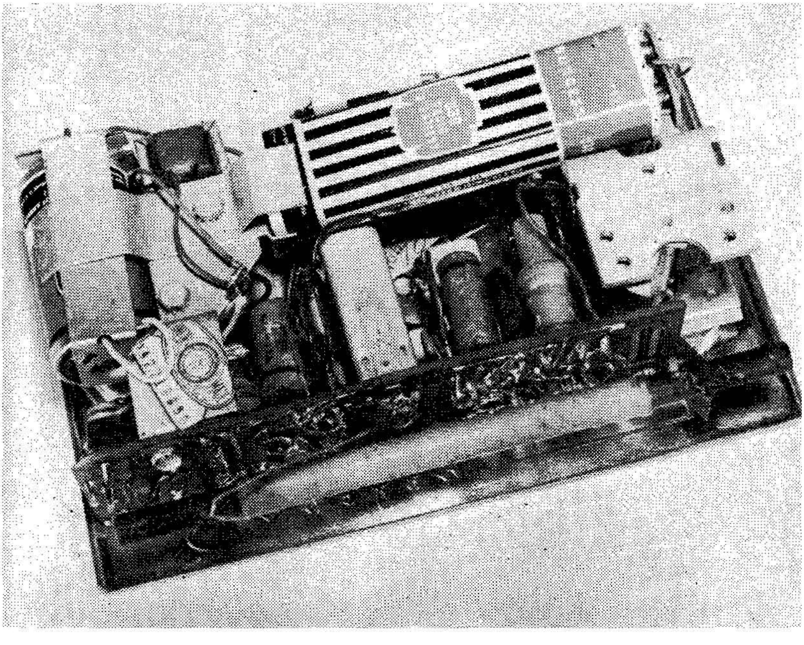

Fig. 4-3: Interior view of CROSLEY's "Book Radio" — note the 45 volt "B" battery. The receiver's "A" battery, which supplies filament voltage for the tubes as well as operating power for the transistors, is under a clamp at the left end of the chassis.

Today, hybrid portable receivers are no longer produced in serious quantities . . . no major manufacturer, for example, has such sets in current production. However, there are a number of these receivers in the hands of consumers and the practical service technician will encounter them from time to time in his daily work. Let's take a look, then, at typical hybrid receiver circuits.

TWO-TRANSISTOR "HYBRIDS." The schematic wiring diagram, chassis layout, and cabinet arrangement used in the Automatic Radio Model TT 600 receiver are given in Figs. 4-4(a), 4-4(b), and 4-4(c), respectively. An exterior view of this radio set is shown in Fig. 4-5.

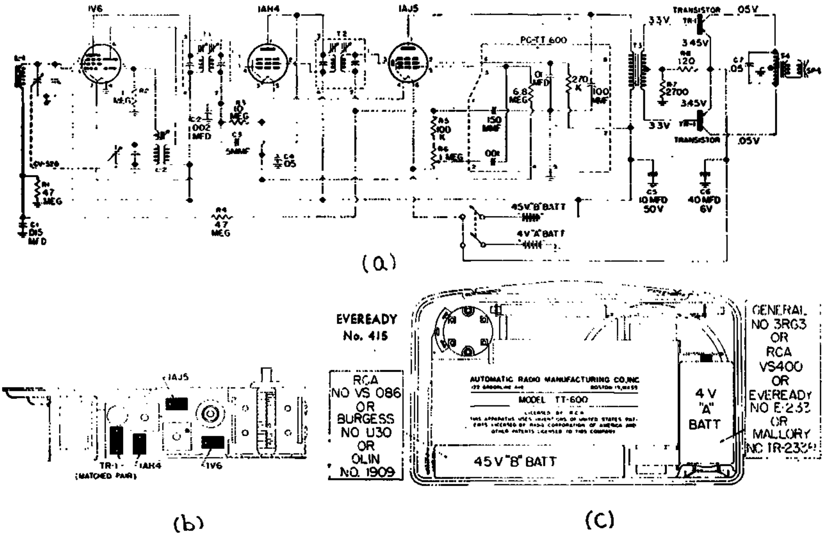

Fig. 4-4: AUTOMATIC RADIO's Model TT-600 receiver. The schematic wiring diagram is given at (a), chassis layout at (b), and an interior view of the receiver, showing battery location, is given at (c). This set uses transistors only in the output stage.

The Firestone Model 4-C-29 receiver is, for practical purposes, identical to the TT 600. These receivers were small "personal" sized portables covering the standard AM Broadcast Band from 540 to 1610 KC. Operating power was supplied by a 45 volt "B" battery and a 4 volt mercury or alkaline cell "A" battery; in normal use, the "B" battery would last approximately twice as long as the "A" battery.

Referring to the schematic diagram, we see that this receiver uses three vacuum tubes and two transistors. The vacuum tube filaments are connected in series and powered by the 4-volt "A" battery; plate and screen voltages are furnished by the "B" battery. The transistors are powered solely by the 4-volt battery.

In operation, loop antenna coil L1, tuned by a standard variable capacitor, serves to pick up and select incoming R.F. signals. These are coupled directly to the first stage, a type 1V6 subminiature triode-pentode vacuum tube; the triode section serves as a local oscillator, with the pentode serving as a mixer to convert the picked up signal to the 455 KC I.F. value. Next, the I.F. signal developed by the mixer is coupled through I.F. transformer T1 to the I.F. amplifier stage, a type 1AH4 subminiature tube. After additional amplification here, the I.F. signal is coupled through the 2nd I.F. transformer (T2) to the diode section of a type IAJ5 diode-pentode; the diode serves as the receiver's second detector, with its load made up of fixed resistor R5 and *Volume* control R6. R5 and R6 are bypassed for R.F. by a 150 MMF capacitor. The D.C. component of the detected I.F. signal is coupled back through R4 and appears across R1 as an AVC control signal for the R.F. mixer. R1 is bypassed by C1, providing a slight delay in AVC operation.

Fig. 4-5: An exterior photo of AUTOMATIC RADIO's Model TT-600 receiver. This set is almost identical to FIRESTONE's Model 4-C-29 radio receiver.

Continuing, the audio component of the detected signal is coupled through a 0.001 Mfd. capacitor to the grid of the 1AJ5's pentode section; this pentode serves as the set's first audio amplifier, with its amplified output signal transformer-coupled through T3 to the transistorized push-pull power output stage. Grid bias for the 1AJ5's pentode is obtained by returning its 6.8 Megohm grid resistor to the "hot" side of the 1V6's filament.

The audio power stage consists of two *PNP* transistors connected as a Class B push-pull amplifier; base bias current is furnished by voltage divider R7-R8. The common-emitter configuration is used. Output transformer T4 matches the moderate output impedance of the transistor stage to the low impedance of the loudspeaker voice coil, assuring an efficient transfer of signal power.

A rather unique biasing arrangement is used in the I.F. amplifier stage. Returning to the 1AH4, a small portion of the amplified I.F. signal appearing across T2's primary is coupled back through C3 and T1's secondary to the tube's grid. Here, the grid acts like a diode and the fed-back signal is rectified, charging C2 and developing a D.C. bias voltage across R3. This bias voltage varies with the amplitude of the fed-back signal and hence with the amplitude of the original R.F. signal picked up by L1. As stronger stations are tuned in, a greater signal voltage appears across T2, feeding back a stronger signal through C3, and developing a *higher* bias for the stage, thus reducing stage gain and compensating for the increased input signal level. Conversely, a drop in input signal level will cause stage bias to be reduced, increasing stage gain. The net effect, then, is a self-contained AVC action in the I.F. stage alone.

The circuit arrangement used in the TT-600 (and Firestone 4-C-29) is basic to most hybrid personal portable receivers. Referring to the schematic diagram of the Emerson Model 838 receiver given in Fig. 4-6(a) as a practical example, we find that the same tube line-up is used, same battery voltages are employed, and, except for minor changes in exact component values, that the circuit is virtually identical to the one we have just discussed. An exterior view of the Emerson 838 is shown in Fig. 4-7.

THREE-TRANSISTOR "HYBRIDS." The design approach used in the receiver circuits we have discussed thus far was not confined just to miniature personal portables, where overall size had to be kept as small as practicable. Hybrid circuits were sometimes used in "full-size" portable receivers. A typical example is the Emerson Model 843 portable radio; this set's schematic wiring diagram is given in Fig. 4-8(a). These receivers differed from the compact "personal" sets not only in physical size, but in a number of other construction details. As a general rule, *subminiature* tubes were used in personal portables, standard *miniature* tubes in the larger sets; larger loudspeakers were used to obtain improved sound quality . . . 4″ to 6″ diameter speakers in "full-size" radios versus 1½″ to 2¾″ units in "personals." Often, higher "B" voltages were used to obtain increased sensitivity. Finally, the larger radios often employed a

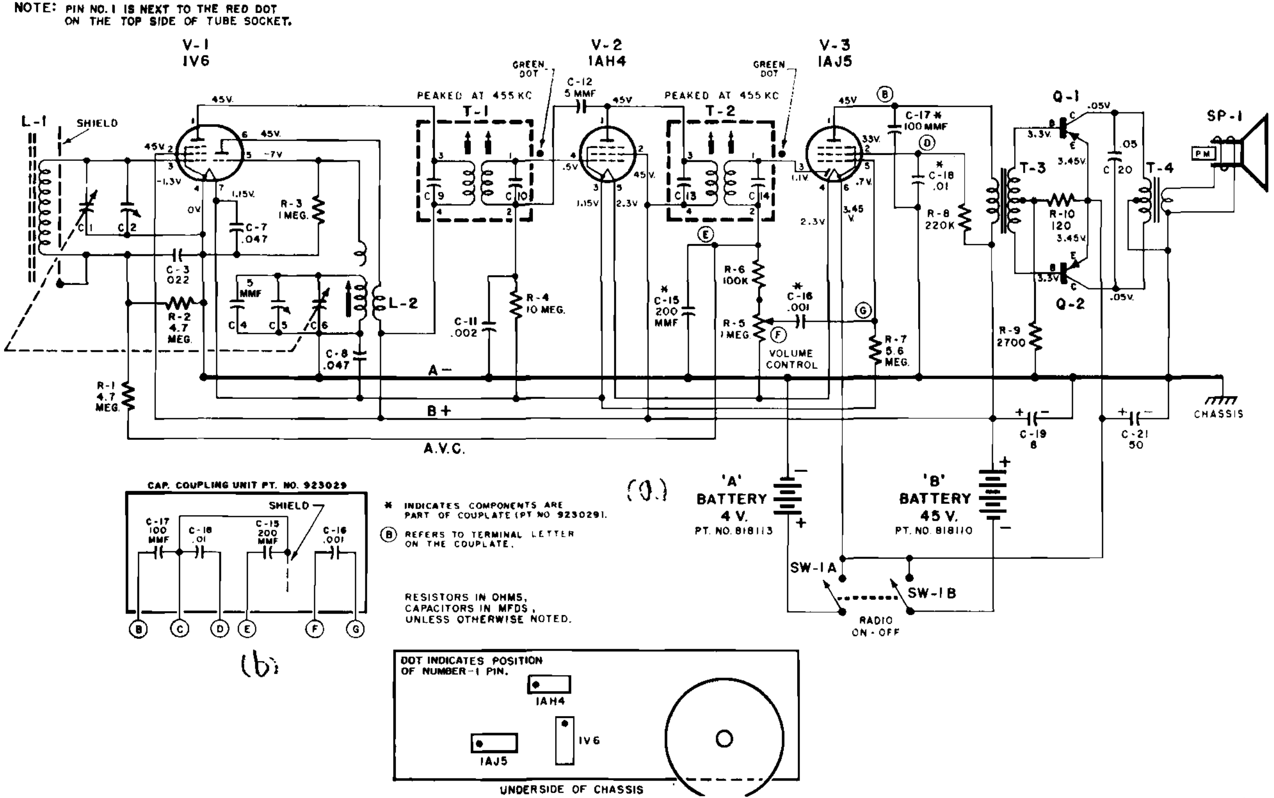

Fig. 4-6: EMERSON's Model 838 radio receiver. The set's schematic diagram is given at (a), printed circuit "couplate" connections at (b), and the chassis layout at (c).

transistor driver stage ahead of the output amplifier to obtain increased power output and greater gain.

Referring to Fig. 4-8(a), we see that the Model 843 is a superhet receiver employing three miniature tubes and three transistors. The set receives the AM Broadcast Band from 540 to 1620 KC. Operating power is furnished by 6-volt "A" and 67½-volt "B" batteries; the "A" battery drain is from 50 MA to about 110 MA, depending on output volume . . . "B" drain averages about 3.2 MA.

In operation, incoming R.F. signals are picked up and selected by a ferrite core antenna coil, L1, tuned by variable capacitor C1. From here, the signal is applied to a type 1R5 pentagrid converter. L2, tuned by C3, serves as the local oscillator coil. The 455 KC I.F. signal obtained from the 1R5 is coupled through I.F. transformer T1 to the 1U4 I.F. stage, with its amplified output signal coupled through T2 to the diode section of a 1U5 diode-pentode vacuum tube. R8 and *Volume* control R9 serve as the diode's load, with the D.C. portion of the detected I.F. signal coupled back through R7 to the 1R5 as an AVC control signal. The audio portion of the detected signal is coupled through C14 to the 1U5's control grid. Thus, the 1U5 serves both as the receiver's second detector and as its first audio amplifier; the tube's screen grid and plate are tied together to obtain triode operation.

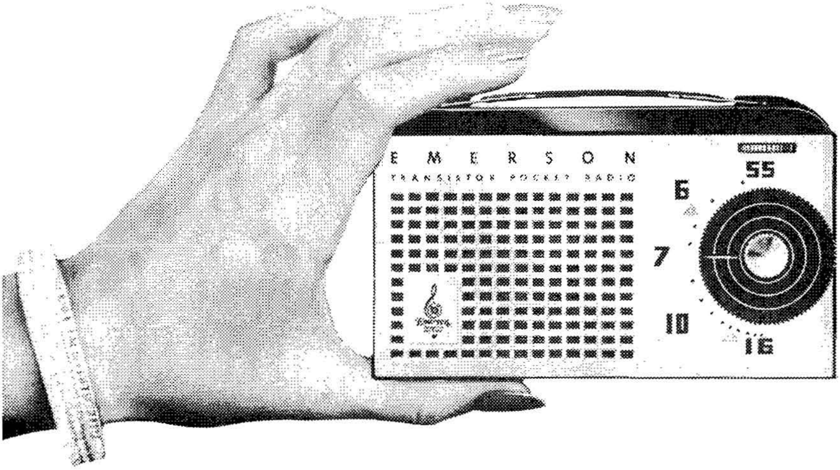

Fig. 4-7: Exterior view of EMERSON's Model 838 receiver.

The amplified audio signal appearing across the 1U5's plate load resistor, R11, is coupled through C15 to the base electrode of transistor V-4, serving as the second audio amplifier. C16 serves as a plate R.F. bypass. V-4's base bias is furnished by voltage divider R12-R14, operating in conjunction with emitter resistor R15, bypassed by C18, R13 and C17 form a decoupling filter in the bias supply circuit. V-4's amplified output signal is coupled through interstage transformer T3 to the push-pull output stage, V-5 and V-6, with its output, in turn, coupled through output transformer T4 to the loudspeaker's voice coil. R17, between T4's secondary and V-4's base, serves to introduce negative (inverse) feedback across the transistor audio amplifier, thus reducing distortion and improving overall stability. The output stage is operated as a Class B amplifier, with base bias supplied through voltage divider R16-R18; unbypassed emitter resistor R19, common to both V-5 and V-6, serves to reduce distortion and to insure balanced operation. All three transistors . . . V-4, V-5, and V-6 . . . are *PNP* units; the common-emitter circuit configuration is used in both transistor stages.

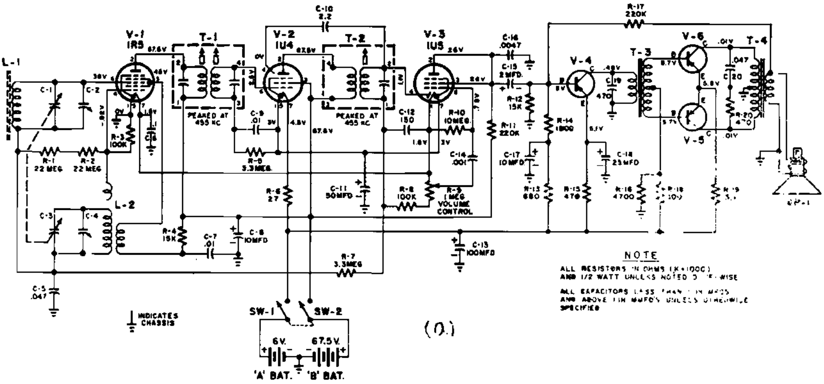

RESISTANCE READINGS

SYMBOL	TUBE	PIN 1	PIN 2	PIN 3	PIN 4	PIN 5	PIN 6	PIN 7	PIN C	PIN B	PIN E
V-1	1R5	0Ω	30MEG	30MEG	100K	0Ω	4MEG	22Ω			
V-2	1U4	38Ω	30 MEG	30MEG	INF.	38Ω	3.3MEG	50Ω			
V-3	1U5	22Ω	30 MEG	30MEG	920K	INF.	10 MEG	38Ω			
V-4	TRANSISTOR	ON-OFF SWITCH TURNED TO OFF POSITION OR BATTERIES DISCONNECTED THEN REMOVE TRANSISTORS FROM THEIR SOCKETS							320Ω	2200Ω	500Ω
V-5	TRANSISTOR								8.5Ω	170Ω	62Ω
V-6	TRANSISTOR								10Ω	170Ω	62Ω

Fig. 4-8: Schematic diagram (a) and resistance chart (b) of EMERSON's Model 843 portable radio. A full-sized receiver (as opposed to the smaller "personal portables"), this set employs three transistors in its audio system.

TRANSISTORIZED "B" SUPPLY. As mentioned earlier, the transistor's application in hybrid receiver circuits was not confined solely to the audio sections. Occasionally, the transistor was used in a high voltage power supply circuit to eliminate the need for a separate "B" battery for tube plate and screen supply voltages. A typical circuit arrangement is shown schematically in Fig. 4-9. In operation, a *PNP* transistor is used as a 15 KC blocking oscillator, with transformer T1 serving both to provide the feedback necessary to start and sustain oscillation and as a "step-up" transformer to obtain a relatively high output voltage. Base bias current is supplied by voltage divider R1-R2, with R1 bypassed by C3 to prevent attenuation of the feedback signal and resulting drop in oscillator efficiency. A modified common-collector circuit configuration is used. C4, L2, C5, and C6 serve as a filter network for the 4.5 volt D.C. source ("A" battery) and prevent the accidental feedback of the oscillator signal into the audio and R.F.-I.F. circuits through common-coupling in the battery. The stepped up voltage obtained from T1 is rectified by a semiconductor diode, D1, and filtered by a "Pi" network made up of C2, L1, and C1. Due to the high operating frequency (15 KC), the "ripple" filter, L1-C1, can be made up of relatively small components; C2 is made moderately large, however, to insure good voltage regulation. The D.C. output voltage (B+) obtained ranges from about 40 to 100 volts, depending on T1's design. In practice, the entire power supply is generally assembled in a well-shielded case to prevent electromagnetic and electrostatic coupling to other receiver circuits.

Since transistorized "B Eliminator" power supplies were seldom, if ever, used in hybrid receivers of domestic (U.S.) manufacture, they may seem to be of academic interest only, except to technicians specializing in the maintenance of imported radio sets. But this is not the case. While such power supplies are seldom found in U.S.-made *receivers,* modified versions of the basic circuit are used extensively in *other types of equipment* . . . in Geiger Counters, Dosimeter Chargers, and so on. These special applications are discussed in detail in Section 9.

SERVICE NOTES. Even if he has encountered relatively few hybrid receivers in his work, the experienced radio service technician probably sensed a familiar "air" about the circuits shown in Figs. 4-4(a), 4-6(a), and 4-8(a). This is not too surprising, of course, for the *Converter, I.F. Amplifier, Second Detector,* and *First Audio* stages in these receivers . . . and in most hybrid portables, for that matter . . . are almost identical to corresponding stages in the "all tube" receivers which the technician may have serviced for years. Since the circuits are similar, the service complaints and component defects encountered are like those found in the same stages in conventional "all tube" sets, and similar troubleshooting procedures may be used. The most common service complaints, of course, are the result of "weak" or "dead" batteries, followed closely by defective tubes. Since all tube filaments are connected in series, an "open" in any one filament will cause all the tubes to go dark. As far as the transistor stages are concerned, trouble here should be an exception, rather than the rule. However, the following general notes . . . which apply to all hybrid portables . . . will be found useful . . .

1) *Resistance checks* – before making such tests, turn the set "Off," and, preferably, remove the batteries . . . *then remove the transistors.*

2) *Battery replacement* - "mercury" batteries are used as "A" batteries in many hybrid sets. These are more expensive than conventional zinc-carbon batteries, but have a much longer operating life, with the advantage that they maintain an almost constant output voltage until exhausted. But the outer case of a mercury battery is its positive terminal . . . the center button is its negative terminal; this is just the *opposite* of familiar zinc-carbon batteries (case negative, button positive, and may cause trouble. *Take care to observe proper polarity when replacing batteries.*

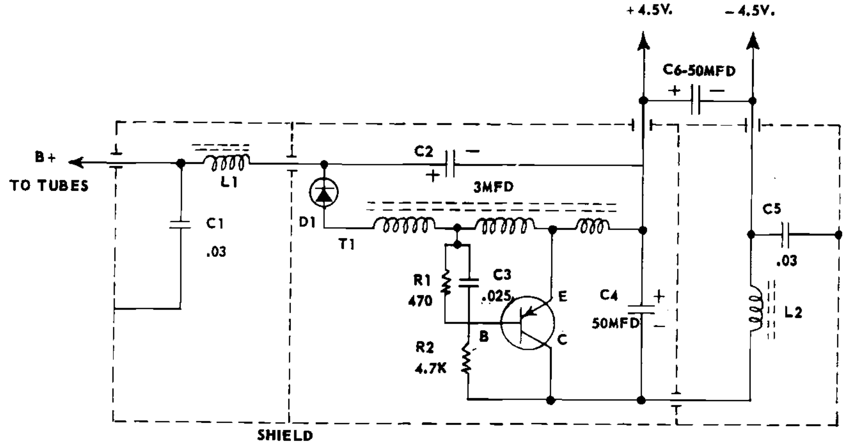

Fig. 4-9: Schematic wiring diagram of a transistorized "B" supply. Such supplies were used in relatively few receivers, but may be encountered from time to time in general service work.

3) *Transistor replacement* – as mentioned in earlier Sections, transistors seldom "go bad" unless abused. If you suspect the transistors, first remove from their sockets and check for normal operating voltages. In the case of transistors used in a push-pull output stage, most hybrid sets employ *matched pairs* in this application. These can be obtained, as a set, from the receiver manufacturer or his local distributor. If *unmatched* transistors are used, general result is lowered output (volume) and *distortion.* Finally, always turn the set

"Off" *before* removing or replacing transistors. *Do not* solder to a transistor socket with the transistor in place.

4) *Filter capacitors* – large value electrolytics are used across the "A" batteries to eliminate cross-coupling through common power supply impedances. Refer to C6, Fig. 4-4(a), C21 in Fig. 4-6(a), and C13 in Fig. 4-8(a). Loss of capacity or "open" may cause distortion or oscillation, depending on battery condition.

TROUBLESHOOTING CHARTS

The Troubleshooting Charts given in Tables 4-A, 4-B, and 4-C apply to all types of American-made hybrid receivers, and may be applied to imported types as well if a transistorized "B" supply is treated as a "B" battery. Table 4-A outlines common complaints and indicates basic isolation procedures. Table 4-B applies to typical complaints resulting from troubles in the R.F. or I.F. sections of receivers; in general, these are the "tube" stages. Table 4-C applies to troubles in the audio section, and, like Table 4-B, lists typical complaints and indicates component defects which may be the cause; the audio section of most hybrid sets, as we have seen, includes *both* tubes and transistors . . . a tube is used as the 1st Audio Amplifier, and transistors in the driver and output stages.

ALIGNMENT. Table 4-D outlines the basic Alignment Procedure for the Automatic TT-600 receiver. However, it can be applied, with but minor changes, to virtually any hybrid receiver. The chief modification is the selection of the correct I.F. value . . . most sets use 455 or 456 KC, but an occasional set may use some other value. A few receivers may require an additional adjustment at 600 KC. This step is carried out between Steps "3" and "4" in the table, as outlined in the following steps . . .

1) Set Receiver Dial to 600 KC.
2) Set Signal Generator to 600 KC., connections as for Step "3."
3) "Rocking" the Receiver Dial about 600 KC., adjust the oscillator coil "slug" (or series padder condenser, if used) for maximum output.

To couple the Signal Generator "loosely" to a loop antenna coil, any of several techniques may be used. A popular method is to connect the Signal Generator to a standard ferrite antenna coil and to use this as a "radiating loop." This may be moved about the workbench or rotated at will to achieve the degree of coupling needed.

ISOLATION PROCEDURE →	CHECK IN ORDER				LOOK FOR
↓ GENERAL COMPLAINT	1	2	3	4	
DEAD	Batteries	Tubes	Audio System	R.F.–I.F. Stages	a. Defective battery, tubes. b. Open or shorted capacitors. c. Defective converter stage.
WEAK	Batteries	Tubes	R.F.–I.F. Stages	Audio System	a. Weak battery, tubes. b. Leaky by-pass capacitors. c. Misalignment.
NOISE	R.F.–I.F. Stages	Audio System	Shielding	Alignment	a. Shorting tuning capacitor. b. Noisy control. c. Open by-pass; defective shielding.
INTERFERENCE	Tubes	R.F. Stages	I.F. Stages	Alignment	a. Defective tubes. b. Misalignment. c. Defective converter.
OSCILLATION	Batteries	R.F.–I.F. By-pass	Shielding	Alignment	a. Weak battery. b. Open by-pass capacitors. c. Defective shielding.
POOR SELECTIVITY	R.F. Alignment	I.F. Alignment	AVC Circuit	Tuned circuit Components	a. Gassy R.F.–I.F. tubes. b. Improper alignment. c. Defective coils, capacitors.
DISTORTION	Batteries	Tubes	Audio System	Loudspeaker	a. Weak battery, gassy tubes. b. Leaky coupling, by-pass cap. c. Improper bias.
INTERMITTENT	Battery	Tubes	Capacitors	Wiring	a. Defective battery, tubes. b. Intermittent capacitors. c. Defective wiring, sockets.

TABLE 4-A: GENERAL COMPLAINT TROUBLESHOOTING CHART — Use this as a guide when servicing "hybrid" receivers, carrying out the suggested checks in order.

PROBABLE DEFECTS →	R.F.-CONVERTER STAGES							I.F. STAGES (S)				GENERAL					
GENERAL COMPLAINT ↓	Defective tube	Low Q Antenna coil	Low Q Osc. coil	Shorting tun. capacitor	Defective by-pass cap.	Defective padder	Misaligned	Defective tube	Defective by-pass cap.	Low Q I.F. transformer	Misaligned	Leaky AVC filter capacitor	Weak battery	Defective 2nd detector	Defective shielding		
Unable to tune stations.	*		●	●	●			*	●		●		*				
Tunes only one station.	*		*		*	●	●			●	*		*				
Dead at high end of band.	*		*				●				●		*				
Dead at low end of band.	*			*	●	*	●				●		*				
Squealing on station.					*		●		*		*				●		
Oscillation off station.					*		●		*		●				●		
Poor selectivity.		*					●		●	*	*						
"Blasting" on station.												*		●			
Does not track dial.						●	*				*						
Drift with time.	*	●	*		●	*				●			*				
Noise as set is tuned.				*											●		
Works for while, cuts out.	*		*					●					*				

TABLE 4-B: R.F.-I.F. TROUBLESHOOTING CHART — If the trouble is in the R.F., converter, or I.F. stages, chances are you'll encounter one of the complaints listed. The more common defects are identified with an asterisk (*); less common defects with a dot.

PROBABLE DEFECTS →	TUBE STAGES								TRANSISTOR STAGES										GENERAL			
GENERAL COMPLAINT (AUDIO)	Open tube	Gassy tube	Leaky tube	Weak tube	Leaky coupling C.	Leaky by-pass C.	Open grid R.	Defective plate R.	Unbalanced	Leaky coupling C.	Open coupling C.	Leaky by-pass C.	Open by-pass C.	Thermistor bad.	Leaky transistor	Noisy transistor	Weak transistor	Changed bias R.	Loudspeaker	Audio transformer	Defective battery	Noisy control
Audio section dead.	*				●	●				●					●				●	●	*	
Low gain.				*		●		●			●		●				●	●			*	
Low power output.				*		●							●				●	●			*	
General "garbling".		*	*		*	●	●		●	●		●		●	●		●	●	●		*	
Distortion on peaks.			*	*	*		*		●	●				●	●		●		●	●	*	
Distortion at low volume.									●					●				●			*	
Poor low freq. response.								●			*		*				●		●	●	●	
Poor high freq. response.								●					*						●	●		
Noise when volume is varied.													●									*
Squealing – motorboating.							*						*	●							*	
Sensitive to temperature.										●		●		*	●			●			*	
Hiss or other noise.								●					●			*				●	*	

TABLE 4-C: AUDIO TROUBLESHOOTING CHART — In "hybrid" receivers, defects which affect sound (audio) quality may be in EITHER tube OR transistor stages. Use this chart as a guide when isolating trouble to a specific component.

In most cases, Alignment is for maximum loudspeaker volume (using a modulated R.F. or I.F. signal). For more accurate adjustment, an Output Meter should be connected across the receiver's loudspeaker voice coil, with all adjustments made for maximum meter reading. *But always use the minimum signal which will deliver a useful output indication* (tone from loudspeaker or Output Meter reading) to limit AVC action; readjust the Signal Generator's Output (or Level) control as necessary.

SERVICE DATA FOR PROFESSIONAL SERVICE MEN

ALIGNMENT PROCEDURE

Volume control - – Maximum, all adjustments.

No signal applied to antenna.

Connect dummy antenna in series with output lead of signal generator.

Connect ground lead of signal generator to chassis.

Dial Setting	Generator Frequency	Dummy Ant.	Generator Connection	Trimmer Adjustment	Trimmer Function
1. Fully open	455 KC	.1 MFD	1AH4 Grid	Maximum	Output I.F. Top & Bottom
2. Fully open	455 KC	.1 MFD	1V6 Grid	Maximum	Input I.F. Top & Bottom
3. Fully open	1610 KC	.1 MFD	1V6 Grid	Maximum	Oscillator Trimmer
4. Tune in signal from generator	1400 KC		Loosely couple signal generator to "Magna Loop"	Maximum	Antenna Trimmer

Repeat alignment procedure as a final check.

TABLE 4-D: ALIGNMENT CHART — Although this chart applies specifically to the AUTOMATIC Model TT-600 and FIRESTONE Model 4-C-29 receivers, it may be used as a general guide for the alignment of ANY portable "hybrid" receiver. Be sure to use the correct I.F. value for the set being serviced.

Section 5

SERVICING TRANSISTORIZED PORTABLE RECEIVERS

JUST AS THE INVENTION of the junction transistor obsoleted tube-operated Hearing Aid designs, so did the development of economical and practical R.F. transistor types eliminate the need for hybrid portable receiver circuitry. Thus, fully transistorized portable receivers became feasible both economically and technically, and, today, represent standard design practice throughout the industry. Although hybrid portables have largely disappeared from the manufacturing scene, all-tube circuits are still used to some extent; however, each passing year sees a reduction in the number of tube-operated designs in current production and an increase in the variety and quantity of fully transistorized receivers offered to the general public. Nor is this trend confined strictly to portable receiver designs. The transistor's many advantages over the vacuum tube have led more and more manufacturers to offer transistorized table model sets and "semi-portables." The latter are receivers designed for use *both* as portables and as home receivers; often, they include a built-in line-operated power supply or battery recharger.

Practical R.F. transistors were made possible by a number of industry developments. These included refinements in construction techniques and more precise controls over manufacturing processes, plus better selection methods based on desirable high frequency characteristics. In addition, a number of new transistor types were developed, including *Surface-Barrier* (*SB*) units, *Micro-Alloy Diffused Types* (MADT), *Drift* transistors, junction *Tetrodes,* and diffused-junction *Mesa* types. Of these, the Mesa and MADT types have the best UHF characteristics, with some units useful as R.F. amplifiers and oscillators to frequencies as high as 1,000 MC. Generally speaking, these special high frequency transistors are the result of radically modified construction methods which emphasize such characteristics as minimum interelectrode capacities, high beta (gain), short internal transit times, and low lead inductances. As far as practical circuitry is concerned, however, these high frequency units may be handled like conventional junction transistors . . . they are used in the same basic circuit configurations, require similar operating voltages and currents, are specified in the same technical terms, and are identified by the same symbols. Thus, they do not represent as great a change from the familiar junction transistor as the junction type did compared to the original point-contact unit.

From a practical servicing viewpoint, conventional junction and Drift transistors are the types most often encountered in commercially built Broadcast-Band radio sets, although Surface-Barrier units are used in some Short-Wave receivers and high-frequency converters (see Section 9). UHF types, such as MADT, Mesa, and Tetrode units, may be found in transistorized TV sets (see Section 8), in special purpose Military equipment, and, occasionally, in electronic computers. Externally, there is little or no difference between various types, with essentially the same case designs and lead (or pin) connections used for junction, SB, MADT, Drift, and Mesa units. This fact, plus the added knowledge that similar circuit arrangements are used for all types of transistors, makes an exact knowledge of a transistor's internal construction not too important to the service technician's work. Where a replacement transistor is needed, it is sufficient to obtain one having *the same type number* as the original unit . . . or, if an exact replacement is unobtainable, a unit having almost identical electrical characteristics (see the Interchangeability Chart, Section 10).

For discussion and circuit analysis purposes, currently available transistorized portable receivers may be divided into four broad classes . . . (a) low-cost *T.R.F. Receivers,* (b) *Broadcast-Band Superhets,* (c) *Multi-Band Receivers,* and (d) a general group of *Special Receivers;* the last class is discussed in detail in Section 9. For the moment, then, let's examine receiver circuits in the first three classes.

T.R.F. RECEIVERS

Several decades ago, when the vacuum tube itself was in its infancy, the *Tuned Radio Frequency* (T.R.F.) circuit was the accepted standard in radio receiver design. Here, all R.F. stages are tuned to the same frequency as the incoming signal. When the super-heterodyne circuit (briefly, *superhet*) was invented by Armstrong in the early '20s, its performance was so superior to that of T.R.F. receivers that it soon supplanted the earlier design and became the industry standard. Today, then, the overwhelming majority of all radio receivers . . . tube *or* transistor operated . . . are superhets.

In the superhet, of course, all incoming R.F. signals, after preliminary selection in the antenna (and, if used, R.F. stages), are converted to a fixed intermediate frequency (I.F.) and amplified at this value before demodulation. Basic T.R.F. circuits are still encountered from time to time, however, principally in low-cost receivers. In transistorized radio sets, T.R.F. circuits are used most often in two and three stage "pocket" receivers designed for earphone operation only; such sets are available in both factory-assembled and "kit" forms, as shown in Figs. 5-2 and 5-3, respectively.

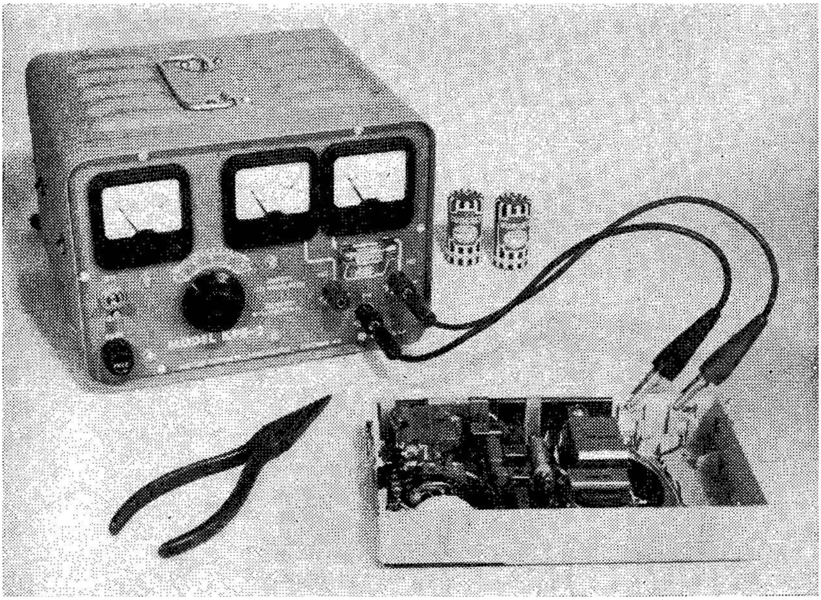

Fig. 5-1: Bench testing a transistorized portable receiver. A line-operated Power Supply is used as a power source in place of batteries.

A "WRIST" RADIO. The schematic diagram of a novel receiver using non-superhet circuitry is given in Fig. 5-4. Manufactured by LEL, this interesting set is smaller than a package of cigarettes and is equipped with a flexible strap, pemitting it to be mounted on one's wrist. Using three *PNP* transistors, this unit is powered by a small 6-volt mercury battery (B1) and feeds its output to a permanently connected miniature dynamic earphone. It is designed to tune the AM Broadcast Band, and has adequate sensitivity for the reception of stronger local stations.

In operation, R.F. signals are picked up and selected by tuned circuit C1-L1; individual stations are selected by adjustment of L1's "slug." A tap on L1 matches the high impedance of the tuned circuit to the moderate input impedance of the first stage's base-emitter circuit. Using the basic common-emitter circuit configuration, the first transistor serves as a regenerative R.F. detector. Regeneration is controlled by adjusting base bias current, and hence stage gain; this is accomplished by bias control R2. The audio signal appearing in the detector's collector circuit is coupled through interstage transformer T1 to the second stage. After amplification here, the audio signal is coupled through a second interstage transformer (T2) to the output stage, and this, in turn, drives the earphones. The common-emitter configuration is used in both audio stages; base bias currents in the second and output stages are furnished through R5 and R6, respectively.

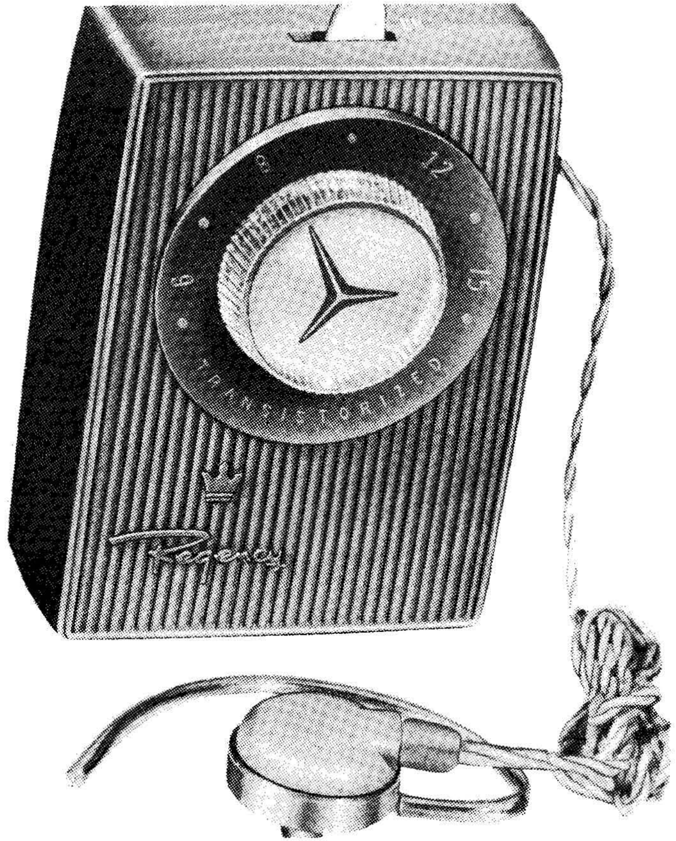

Fig. 5-2: A small REGENCY receiver. This is typical of the two and three transistor "pocket" receivers designed for earphone operation.

A POCKET RADIO. Slightly larger than a package of cigarettes, the Philco Model T-3 receiver uses more conventional T.R.F. circuitry than that found in the "Wrist" radio discussed above. The T-3's schematic diagram is given in Fig. 5-5. Using three *PNP* transistors and a crystal diode, this set is powered by two mercury cells supplying 1.3 volts each; the battery arrangement is rather unique in that the two cells are connected in series with a "center-tap" to circuit ground. The T-3 tunes the AM Broadcast Band and drives a permanently connected "Hearing Aid" type earphone.

Referring to Fig. 5-5, we see that the common-emitter circuit configuration is used throughout the set. Essentially, the T-3 consists of two R.F. amplifier stages, a diode detector, and a single audio output stage. In operation, R.F. signals are picked up and selected by antenna coil LA1, tuned by variable capacitor C1. The selected R.F. signal is coupled through a step-down secondary winding on LA1 to the base-emitter circuit of the 1st R.F. amplifier. The output of this stage is applied to interstage R.F. transformer T1, which is tuned by variable capacitor C2. From here, the amplified signal is coupled by a step-down secondary to the 2nd R.F. amplifier stage. Tuning capacitors C1 and C2 are mechanically "interlocked," but not *ganged;* independent adjustment of these two units is possible to permit "fine tuning" for optimum selectivity. The output signal delivered by the second R.F. stage is coupled through a broad-band (untuned) R.F.

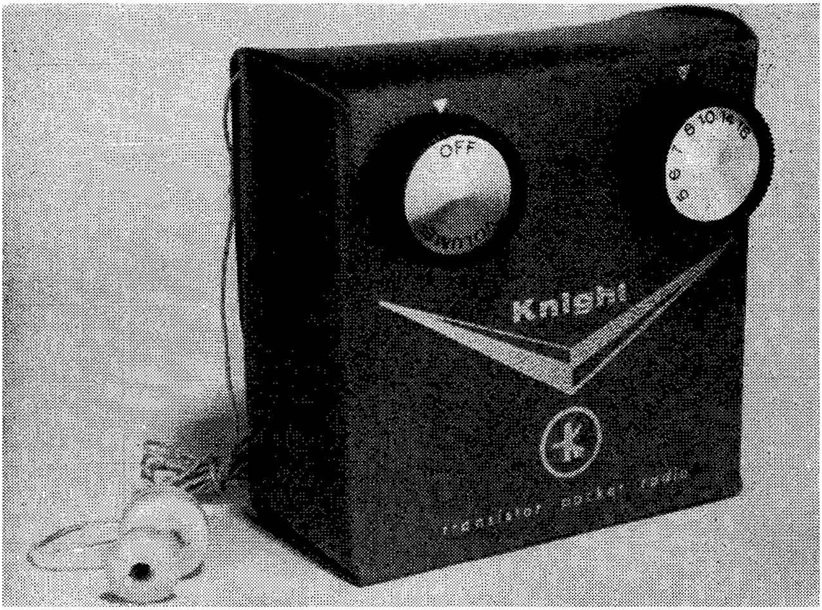

Fig. 5-3: Another typical pocket radio, this KNIGHT receiver is sold in kit form.

transformer (T2) to a conventional diode detector. Both A.C. (audio) and D.C. components appear across the detector's load resistor, *Volume* control R4. The D.C. component of the detected signal is fed through R2 and combined with a fixed bias obtained from the power supply through R3; the combined D.C. bias is applied to the base of the 2nd R.F. stage as an AVC control signal. The audio signal is coupled through C8 to the output stage and, after additional amplification, is applied to the earphone.

The T-3 was manufactured in several different versions, each identified by its "Code Number." The chief difference between versions is the type of audio transistor used; a corresponding change was made in the value of the base bias resistor (R5, Fig. 5-5) to obtain similar performance in all units. A table in Fig. 5-5 lists the different versions by Code, and indicates the value of the base resistor used in each case.

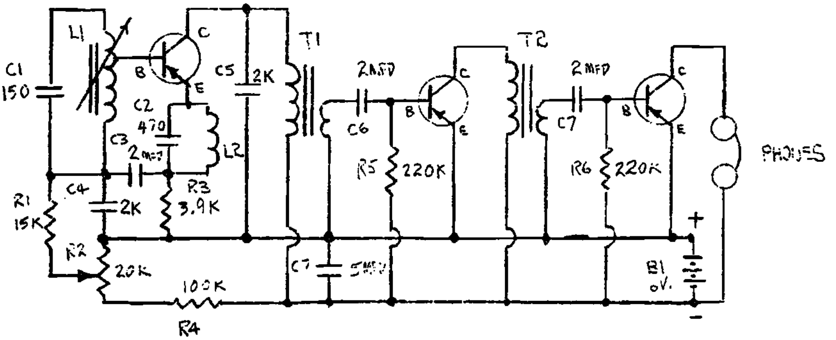

Fig. 5-4: Schematic wiring diagram of LEL's "wrist radio." The circuit shown is typical of those used in non-superhet pocket receivers.

While "Alignment" is most often associated with superhet receiver circuitry, multi-stage T.R.F. receivers also must be aligned if the maximum in performance is to be realized. The Alignment procedure for the T-3 is as follows:

1) Turn on a standard AM Signal Generator. While it warms up, make up a *radiating loop* by coiling 6 to 8 turns of insulated wire into a loop six inches in diameter; connect this to the generator's output and place the coil about one foot from the receiver's antenna.
2) Connect an Output Meter across the T-3's earphone terminals; turn the set on, and adjust the *Volume* control to maximum.
3) Adjust the Signal Generator to deliver a 600 KC modulated R.F. signal.
4) Set T-3's antenna tuning knob (C1) to 600 KC, then without disturbing antenna tuning, adjust the R.F. tuning control

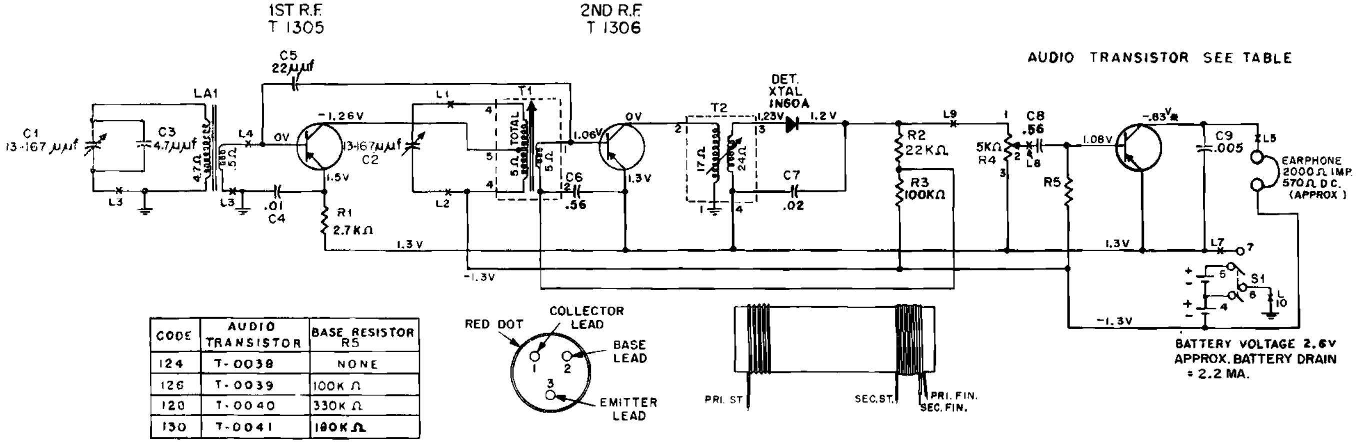

CODE	AUDIO TRANSISTOR	BASE RESISTOR R5
124	T-0038	NONE
126	T-0039	100K Ω
120	T-0040	330K Ω
130	T-0041	180K Ω

Fig. 5-5: Wiring diagram of PHILCO's Model T-3 pocket receiver. This set features two R.F. stages and is designed for earphone operation only.

(C2) to its midposition. *These controls are left untouched* after initial setting.

5) Adjust the Signal Generator's output so that 0.63 volts is indicated on the Output Meter. Readjust as necessary to maintain this output during alignment.
6) Adjust T1's core for a peak reading on the Output Meter. Afterwards, "rock" the Signal Generator's tuning slightly, readjusting for maximum output.
7) Adjust T2's core for a peak reading on the Output Meter. The peak will be slight, as T2's response is quite broad.

With Step (7), the receiver's Alignment is complete.

BROADCAST-BAND SUPERHETS

All superhet receivers, whether tube or transistor-operated, and whether designed for the reception of AM or FM Broadcasts, TV channels, long-wave or short-wave stations, communications service (such as Police radio), or for special jobs (such as satellite telemetering), are based on the same general principles. R.F. signals are picked up by an *antenna system* (or loop antenna coil) and selected by one or more tuned circuits. The selected signal may be amplified by a *T.R.F. stage,* but, more often in small receivers, is applied directly to a *mixer* or *converter* stage (often called the "first detector"); here, the signal is combined with a locally generated CW R.F. signal supplied by a *local oscillator.* The mixer's output contains the two original signals and their sum and difference frequency signals, both of which contain the original modulation of the picked-up R.F. signal. One of these . . . usually the *difference* frequency signal . . . is selected by a tuned transformer and becomes the receiver's *intermediate frequency* (I.F.) signal. If the receiver is designed to tune over a range of frequencies, its local oscillator tuning is varied at the same time so that the difference frequency between the incoming R.F. and locally generated signals always remains constant at the I.F. value. Next, the I.F. signal is amplified by one or more tuned *I.F. amplifier* stages; afterwards, it is applied to a suitable *demodulator* or *detector* (the "second detector"). The detector's output signal, representing the modulation on the original picked-up R.F. signal, is applied to *audio or video amplifiers,* and these, in turn, drive an *output device* of some type. Depending on the receiver's design and application, the output device may be a loudspeaker, earphones, cathode ray tube, recording oscillograph, relay, or meter.

Of course, every service technician should already be familiar with the basic operation of the superhet receiver, as outlined above. The outline is given, then, both as a quick review of overall operation and to minimize the need for repetition in our later discussion of typical transistorized receivers. As we shall see, Broadcast-Band superhets are manufactured in a variety of shapes, sizes and circuit designs, and may use from as few as four to as many as six, seven, or even more transistors. Circuits vary considerably from one manufacturer to another and even between similar appearing models of the same manufacturer . . . for example, two receivers mounted in almost identical cabinets, but carrying slightly different model numbers, may employ different types of transistors and circuits. A component which may be a common source of trouble in one may be missing entirely from the other!

As the experienced radio-TV service man will recognize, this is in direct contrast to the situation encountered in tube-operated Broadcast-Band receivers. While scores of different models have been produced by, literally, dozens of different manufacturers, the vast majority of tube receivers are 4 or 5-tube AC-DC sets using almost identical basic circuits and very similar (if not identical) tube lineups . . . a pentagrid converter, pentode I.F. amplifier, diode-triode (or diode-pentode) 2nd detector-first audio amplifier, beam power or pentode audio output tube, and either a selenium rectifier or halfwave tube. The major differences encountered between models (aside from cabinetry) are usually in chassis layout and in the exact values of small components.

The situation in tube radio circuit design is the natural result of the receiver industry's long experience in manufacturing such sets. Eventually, designs become optimized and standardized, and it is to the manufacturer's advantage to deviate as little as possible from his proven circuits unless a new design offers improved performance or production economies. At some future date, when transistor types are more standardized than at present, and when the industry has had much more experience with transistor circuits, we can expect a similar degree of standardization among transistor radio circuits.

For discussion purposes, it is convenient to group Broadcast-Band receivers together according to the number of transistors used in their circuits. Within this general framework, there is some degree of standardization (although not even approaching that of tube-operated sets); as a result, the circuit of, say, one four-transistor set may be used as a *general* guide in servicing another four-transistor set . . . but *not as an exact plan.*

FOUR-TRANSISTOR RECEIVERS. The first fully-transistorized, mass-produced receiver manufactured in the world was introduced *well under* a decade ago . . . and its production has continued, in modified forms, till the present day. This receiver, the Regency Model TR-1, is a four-transistor pocket-sized set featuring a built-in loudspeaker and powered by a 22.5 volt Hearing Aid-type battery; a

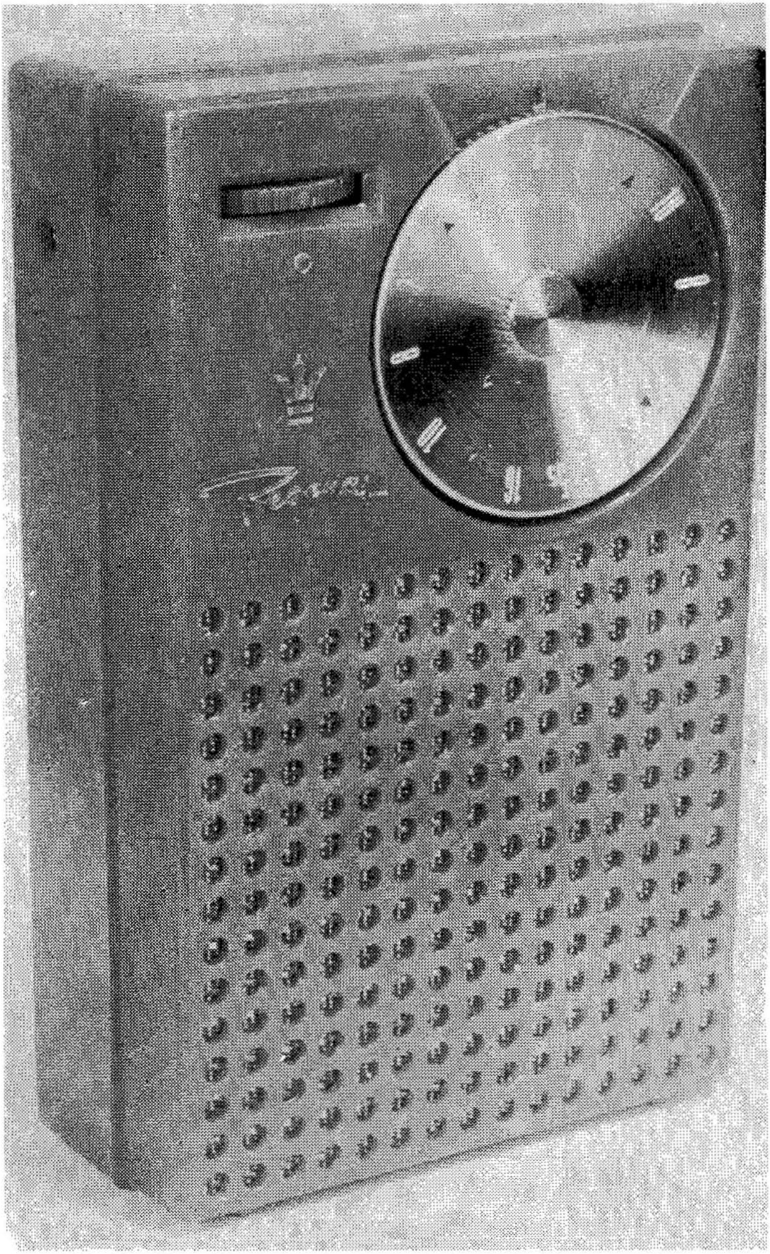

Rig. 5-6: REGENCY's "TR-1" pocket radio. One of the first transistor superhets manufactured commercially, this popular receiver employs four transistors and has a built-in loudspeaker as well as provision for earphone operation.

photo of the TR-1 is given in Fig. 5-6. Later versions of the TR-1 are very similar to it in external appearance and even in chassis layout, but use somewhat modified circuitry. For example, the original TR-1 used all *NPN* transistors; the TR-1G, a later version, uses *NPN* transistors in the R.F. and I.F. stages and a *PNP* transistor in its audio stage. The schematic wiring diagram of the TR-1G is given in Fig. 5-7. Different versions of the TR-1 receiver are distinguished by a letter suffix added to the basic Model number. However, even within a given version, there may be circuit variations in different production runs. For example, referring to Fig. 5-7, R18, R19, R12 and C16 are not used in all models, and C12 (listed as 0.01 Mfd.) may be 0.05 Mfd. in some units. *Such variations are not all unusual in transistor receiver design and, frequently, are the result of differences in the individual electrical characteristics of the transistors used.* Let's examine this first circuit in some detail.

Turning to the schematic diagram, we note that the common-emitter circuit configuration is used in all stages. In operation, R.F. signals are picked up by antenna coil L1, tuned by variable capacitor C1A; a step-down secondary winding on the antenna core, L2, serves to match the high impedance of the tuned circuit to the moderate input impedance of the transistor, minimizing circuit loading and assuring not only an efficient transfer of signal energy to the transistor, but good selectivity. The signal supplied by L2 is coupled through D.C. blocking capacitor C2 to the base-emitter circuit of the transistor. Stage base bias is furnished through voltage divider R1-R2, operating in conjunction with emitter resistor R3. The first transistor is operated as a converter; L4, in series with the collector, feeds back energy to L3, connected through C4 to the emitter, to start and maintain oscillation. A tap is provided on L3 to minimize the loading effect of emitter resistor R3 and thus to insure good circuit Q; this coil is tuned by variable capacitor C1B, ganged with C1A . . . both series padder (C3) and trimmer (A5) capacitors are provided. An I.F. signal at *262 KC* is developed by the converter stage and selected by its output load, tuned I.F. transformer T1. R4 and C5 form a decoupling filter in the collector supply circuit.

In a transistorized receiver, an interstage I.F. transformer serves a dual role. It not only selects the I.F. signal, by virtue of its tuned primary winding, but, at the same time, acts as a step-down transformer to match the high output impedance of the tuned circuit to the low or moderate input impedance of the succeeding stage. As a general rule, *only the transformer's primary is tuned.* This is in contrast to the I.F. transformer design used in typical tube circuits; in a tube-operated receiver, both the primary and secondary windings are likely to be tuned, and there is often a one-to-one ratio between the two windings.

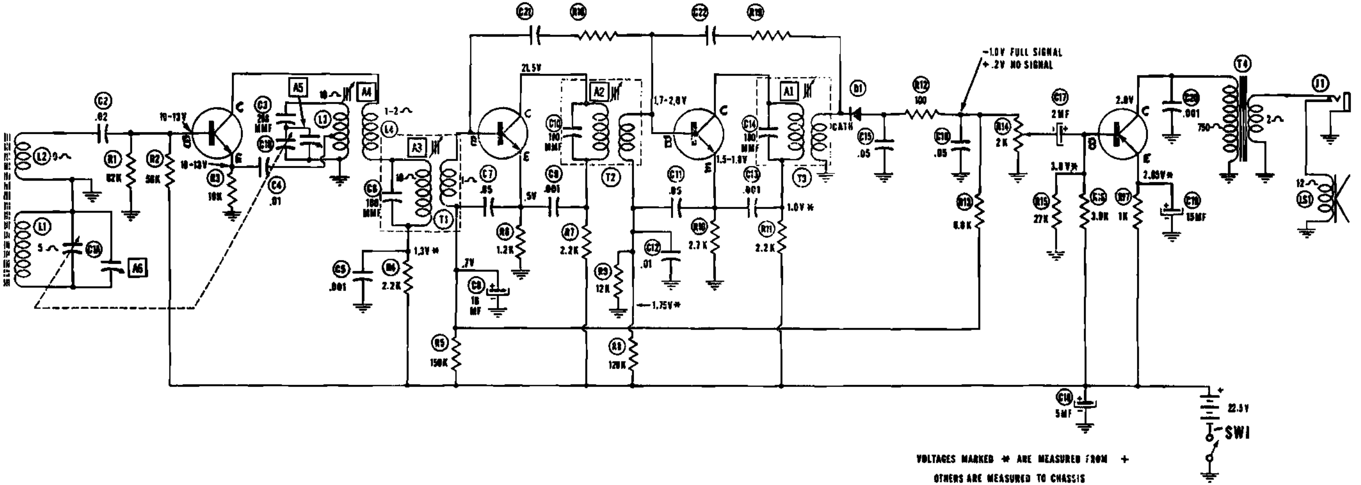

Fig. 5-7: Schematic wiring diagram of REGENCY's Model TR-1G receiver. Most of the "TR-1" series are similar in external appearance and use closely related circuity.

Continuing, the I.F. signal obtained from T1's secondary is applied to the base-emitter circuit of the second stage, an *NPN* R.F. transistor serving as the receiver's first I.F. amplifier. Its amplified output signal appears across the tuned primary winding of second I.F. transformer T2. An R-C network, C21-R18, is connected from T2's secondary to the first I.F. amplifier's base, and serves to feed back an out-of-phase signal to cancel signals fed back from the collector to base through the transistor's interelectrode capacities; thus, network C21-R18 serves to *neutralize* the stage. "Old-timers" will recall that *stage neutralization* was used often in the early days of radio, when only triode vacuum tubes were available. Collector current is furnished through a decoupling filter made up of R7 and C9. Base bias is determined by a combination of a fixed bias obtained from the battery through R5, by emitter resistor R6, and by a variable bias obtained from the receiver's second detector and serving as an AVC control voltage. More about AVC action later.

The amplified I.F. signal is coupled by T2's secondary to the second I.F. amplifier stage, with its output signal, in turn, developed across T3's tuned primary winding. The operation of the second I.F. stage is very similar to that of the first, except that a fixed, rather than a variable, base bias current is supplied. Thus, base bias is established by voltage-divider R8-R9, bypassed by C11 and C12, in conjunction with emitter resistor R10. Collector current is furnished through decoupling filter R11-C13. Stage neutralization is provided by network C22-R19, connected between T3's secondary and the transistor's base.

From T3's secondary, the amplified I.F. signal is applied to a conventional diode detector, D1, with the detected signal appearing across the diode load resistor, *Volume* control R14. Series resistor R12 and shunt capacitors C15 and C16 serve as an R.F. filter to remove the I.F. components of the detected signal. The signal appearing across R14 has an A.C. (audio) component representing the modulation on the original picked-up R.F. signal, and a D.C. component representing the average amplitude of that signal. The audio signal is coupled through a moderate-sized electrolytic, D.C. blocking capacitor C17, to the base-emitter circuit of the audio output stage, which, in turn, amplifies the signal further and applies it through output transformer T4 to the miniature loudspeaker's voice coil winding (LS1). The output stage is a *PNP* transistor operated as a single-ended Class A amplifier; base bias current is furnished through voltage-divider R15-R16, in conjunction with emitter resistor R17, bypassed by C19. A small capacitor, C20, is connected from the transistor's collector to circuit ground and serves as a by-pass for higher frequency audio signals, reducing the effects of harmonic distortion. A closed-circuit jack, J1, is connected in series with the loudspeaker and permits a dynamic earphone to be used in place of the built-in speaker for "personal" listening. Operating power for the entire receiver is furnished by the single 22.5 volt battery, controlled by SPST switch SW1, ganged to *Volume* control R14, and bypassed by C18. Normal current drain is about 5 MA.

The AVC action in a transistorized receiver is different from that of a tube-operated receiver. Hence, a closer examination of the AVC circuit . . . and its operation . . . is in order. But first, let's review tube AVC operation.

In a vacuum tube, stage gain, in general, is inversely proportional to grid bias. *The bias voltage is always negative.* As the bias voltage is *increased,* stage gain is *reduced* . . . and vice versa. Thus, the AVC circuit used in vacuum tube-operated receivers is designed to *increase the bias* of the controlled stages with *increases in the signal strength*

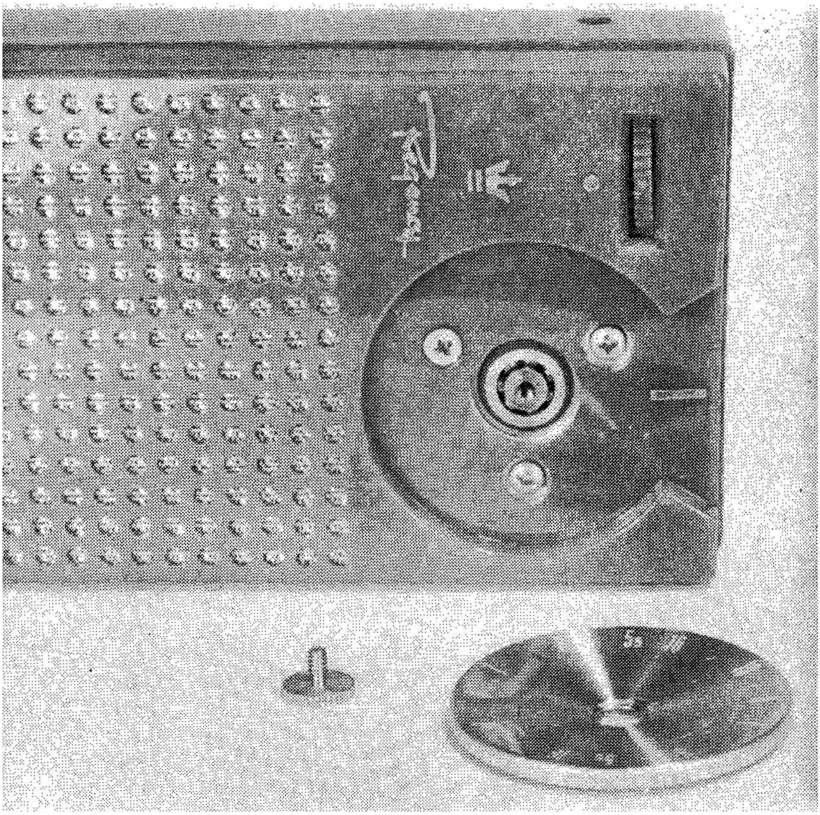

Fig. 5-8: In many pocket receivers, the tuning dial is removed by first removing a decorative center screw, as shown here. In a few sets, the dial just "pulls off" as in most table model sets.

of the picked-up R.F. signal, reducing stage gain and keeping overall gain . . . and output volume . . . at a reasonably constant value. This reduces "blasting" and "fading" to a minimum as stations of varying signal strength are tuned.

In a transistor amplifier, stage gain is directly proportional to base bias current within reasonable limits. *The bias current may be either positive or negative,* depending on the type of transistor. In a *PNP* transistor, a *negative* base bias is used; in an *NPN* unit, a *positive* bias is employed. But in either case, as bias current is *reduced,* stage gain is *reduced* . . . and vice versa. In effect, then, the AVC circuit used in a transistorized receiver operates oppositely to that used in tube sets. Here, the *bias current* of the controlled stages *is reduced* with *increases in signal strength,* reducing stage gain and maintaining a constant output volume.

Returning, now, to Fig. 5-7, we see that an *NPN* transistor is used as the 1st I.F. amplifier. Such a transistor requires a *positive bias* current for "normal" maximum gain operation, and this current is supplied from the positive side of the power supply battery through R5, bypassed by C7 and C8. With the diode (D1) connection used in the second detector, the D.C. component of the detected I.F. signal is *negative* with respect to circuit ground; its amplitude, of course, depends on the amplitude of the I.F. signal, and hence on the average amplitude of the original picked-up R.F. signal. This negative-going signal is coupled back through R13 to combine with the positive bias supplied through R5 and to reduce the transistor's base bias current, thus reducing stage gain. C8, at the juncture of R5 and R13, serves both as a by-pass and to provide a slight delay in the application of the AVC control signal. As stronger signals are picked up, the D.C. signal developed across R14 increases, and this, fed back through R13, reduces stage bias still more, dropping the amplifier's gain to compensate for the stronger signal. If no stations are being received, no D.C. voltage is developed by detector action; under these conditions, the small positive voltage available at the juncture of R5 and R13 is fed through R13 and appears across R14, its amplitude determined by the ratio of R5, R13, and R14. Thus, under "no signal" conditions, the D.C. voltage across R14 is 0.2 volts *positive* . . . under "full signal" conditions, this voltage changes to 1.0 volts *negative* with respect to circuit ground.

To Align the TR-1G receiver, first snap off its back cover and connect an Output Meter across the receiver's loudspeaker's voice coil (this connection is accessible at the earphone jack J1). Set to the 0.1 Volt scale. A standard R.F. Signal Generator is coupled to the receiver through a small *radiating loop* (as described earlier); use minimum coupling and minimum generator output to obtain a useable indication on the Output Meter, readjusting the generator's level control as necessary. Turn the receiver on and set its *Volume* control to maximum. Adjust the Signal Generator to supply a 262 KC modulated signal. Next, using a small insulated Alignment tool, adjust each of the I.F. transformers (T1, T2, T3), in turn, for a peak reading on the Output Meter. Next, shift the Signal Generator to 535 KC and set TR-1's dial to its maximum counterclockwise position. Adjust the oscillator coil's core (A4, Fig. 5-7) for maximum output. Shift the Signal Generator to 1630 KC and the receiver's dial to its full clockwise position; adjust the oscillator trimmer (A5) for maximum output. Finally, set the Signal Generator to 1500 KC, tune the receiver dial to this frequency, and adjust the antenna trimmer (A6) for maximum output. As a check, repeat the last three Alignment steps and check dial tracking.

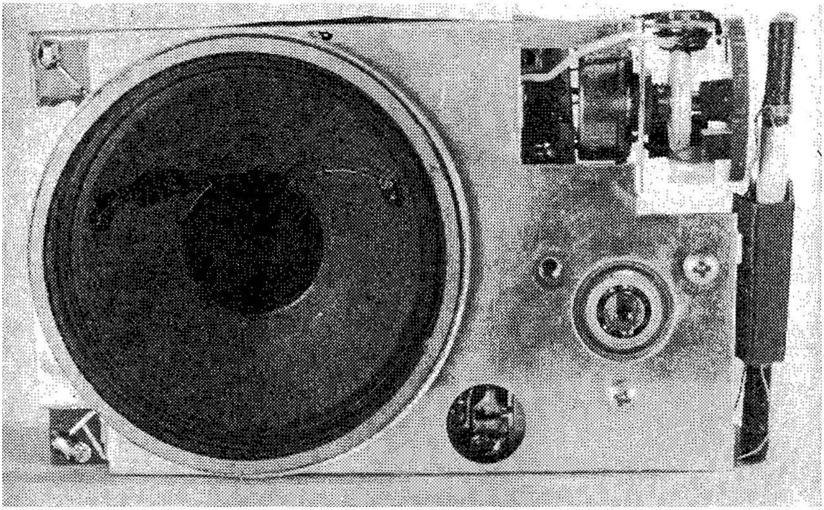

Fig. 5-9: Front view of the TR-1's chassis, with case removed. The chassis is held in its case with a single screw.

The Alignment procedure outlined, except for exact I.F. value employed (some sets use 455 or 456 KC I.F. values), may be applied to virtually any small transistorized receiver. Just remember to use the *minimum signal* needed for a useful indication on the Output Meter. Lacking an Output Meter, an A.C. Voltmeter or Oscilloscope may be used as an output indicator. In a "pinch," Alignment can be for maximum volume, as heard from the set's loudspeaker.

Many small pocket-sized transistorized receivers are mounted in cabinets similar to that used in the TR-1 series of receivers. In general, the back of the chassis may be reached simply by snapping the set's back cover off. In a few instances, a small screw may be used to secure the cover in place. To remove the chassis from its cabinet, first remove the center screw holding the tuning dial in place, as shown in Fig. 5-8. Next, remove the single screw that secures the chassis to the cabinet . . . in the illustration, this is the upper left-hand screw. Front and rear views of the TR-1's chassis are given in Figs. 5-9 and 5-10, respectively.

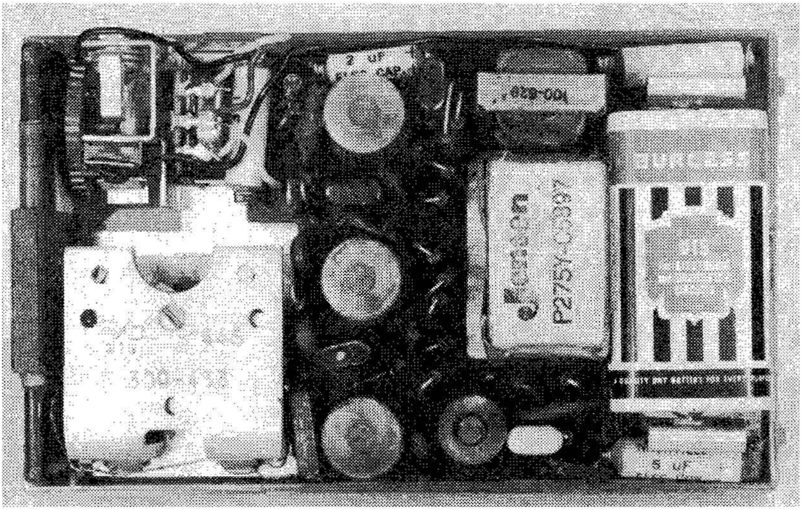

Fig. 5-10: Rear view of the TR-1 chassis. Antenna coil is on extreme left, with the set's tuning capacitor and volume control next to it. Battery is on extreme right. The set's I.F. transformers are in a line in the center of the chassis.

FIVE-TRANSISTOR RECEIVERS. The GE Model 675 receiver is shown in Fig. 5-11; its schematic diagram is given in Fig. 5-12, and a rear view of the set, with back cover removed, in Fig. 5-13. Identical circuits were used in the Models 676, 677 and 678, the essential difference between models being the color of the cabinet, knob, and tuning knob insert. Physically, the Model 675 is about the same size as the TR-1 discussed above and, externally at least, resembles the earlier receiver. However, as a study of the schematic diagram reveals, the circuits are entirely different. The 675 series use three *PNP* R.F. transistors, one *NPN* unit, and one *PNP* audio type. Operating power is supplied by a "tapped" battery furnishing voltages of –13.5 volts and –4.5 volts with respect to circuit ground; the battery is controlled by a DPST switch (S1) ganged to the *Volume* control (R11). The common-emitter configuration is used in all stages.

A number of component changes were made during various production runs of this receiver. During early runs, type 2N136 and 2N137 transistors were used for converter and 1st I.F. amplifiers, respectively. In later runs, type 2N135 transistors were used in the converter and both I.F. stages. Either type 2N78 or 2N169 may be used in the first audio (detector) stage. A small diode, Y1, was used in some late production runs to improve detector action, but is not found in earlier sets. R9's value may be either 47K or 39K, with 22K used here when the diode (Y1) is included in the circuit. C13 is omitted in many later sets. Finally, R7's value may vary with the exact characteristics of R.F.-I.F. transistors used.

Since we examined basic stage functions in considerable detail in reviewing the operation of the Regency TR-1G receiver, we needn't apply as exhaustive an analysis to the 675 receiver. Rather, we will examine the more important differences between the two circuits.

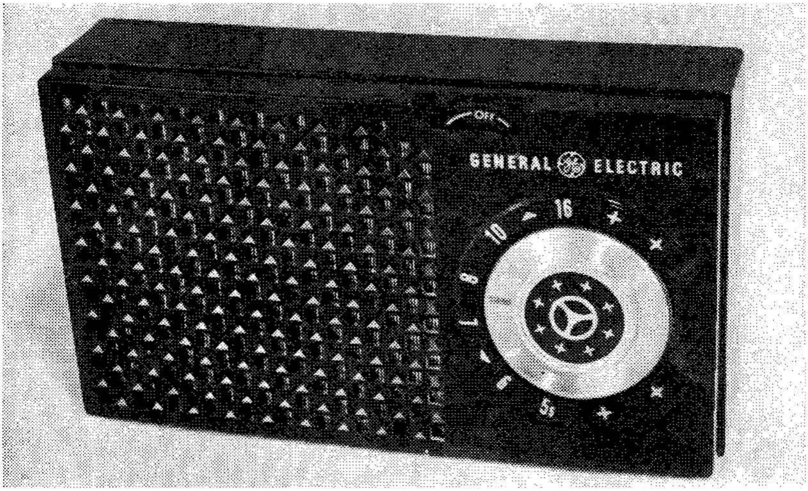

Fig. 5-11: GE's Model 675 pocket receiver. This small receiver is a five transistor superhet.

Referring, then, to Fig. 5-12, we find that the first three stages correspond approximately to those used in the TR-1G, and consist of (in order), a converter, 1st I.F. amplifier, and 2nd I.F. amplifier. As in the other set, the interstage I.F. transformers have tuned primaries and untuned secondaries, and provide a step-down turns ratio for impedance matching. *PNP* (rather than *NPN*) transistors are used in the R.F. and I.F. stages. The local oscillator circuit is different... in the TR-1G, the feedback necessary to start and maintain oscillation was provided between the collector and emitter circuits; here, this feedback takes place between collector and base circuits, with the oscillator coil's (T2) feedback winding connected in series with the antenna coil's (T1) secondary and driving the converter's base through D.C. blocking capacitor C2. A different I.F. is used . . . 455 KC instead of 262 KC. Neutralization is provided for the first I.F. amplifier (by C15), but is not needed for the second due to R7's loading effect.

The audio amplifier used is quite different from that found in the TR-1 series. The power output stage, X5, is basically a single-ended Class A amplifier coupled to its load, the loudspeaker voice coil, by impedance matching transformer T6. However, the output stage's *base bias varies* with the amplitude of the received signal and with the setting of the *Volume* control (R11); as stronger signals are received, or as R11 is turned up for greater volume, stage bias is increased, resulting in an increase in collector current flow, and, thus, an increase in the current drawn from the power supply. This circuit action results from the *direct-coupling* used between the detector-first audio stage (X4) and the power output stage. Direct-coupling is made possible in this case, by the complementary* characteristics of *PNP* and *NPN* transistors; as we have seen, X4 is an *NPN* unit.

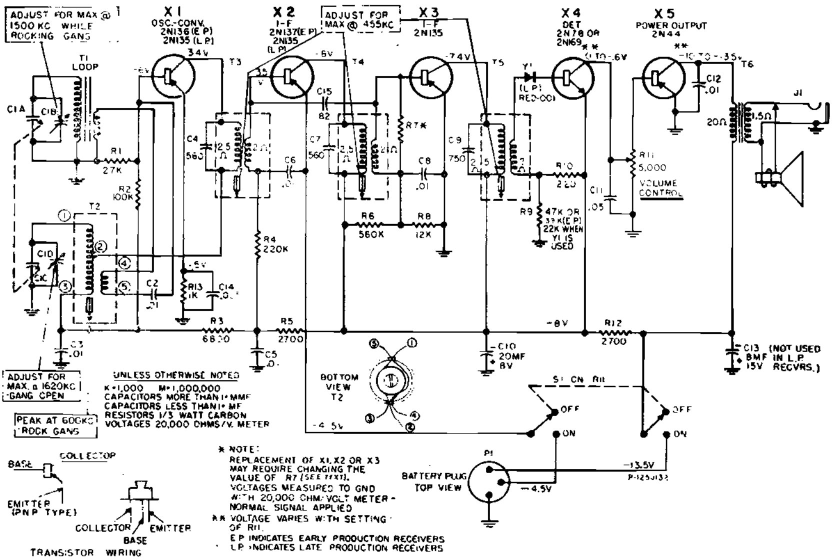

UNLESS OTHERWISE NOTED
K = 1,000 M = 1,000,000
CAPACITORS MORE THAN 1 = MMF
CAPACITORS LESS THAN 1 = MF
RESISTORS 1/3 WATT CARBON
VOLTAGES 20,000 OHMS/V. METER

* NOTE:
REPLACEMENT OF X1, X2 OR X3 MAY REQUIRE CHANGING THE VALUE OF R7 (SEE TEXT).
VOLTAGES MEASURED TO GND WITH 20,000 OHM/VOLT METER - NORMAL SIGNAL APPLIED
** VOLTAGE VARIES WITH SETTING OF R11.
E P INDICATES EARLY PRODUCTION RECEIVERS
L P INDICATES LATE PRODUCTION RECEIVERS

Fig. 5-12: Schematic wiring diagram of the GE Model 675. Note that this set features a two-transistor direct-coupled audio amplifier system.

As we observed, the TR-1 used an AVC (or AGC) circuit in which the control signal obtained from the 2nd detector was applied to the 1st I.F. amplifier stage. A far different arrangement is used

---

*Complementary . . . similar, but with opposite D.C. polarities.

in the 675. In operation, the detector-first audio stage (X4) obtains its emitter bias from the battery through series resistor R12, bypassed by C10. The base and collector bias currents supplied to the converter and I.F. stages is furnished through this same resistor. X4 does not draw current until a signal is received, and the voltage drop across R12 is due only to the bias currents drawn by the first three stages; bias voltage, then, is at a maximum, and the converter and I.F. stages operate at maximum gain. When a station is tuned in, X4 draws a current directly proportional to signal strength, increasing the voltage drop across R12, and dropping the negative bias supplied to the first three stages. This, in turn, reduces the gain (sensitivity) of these stages, compensating automatically for increases in signal strength, and providing the desired AVC action.

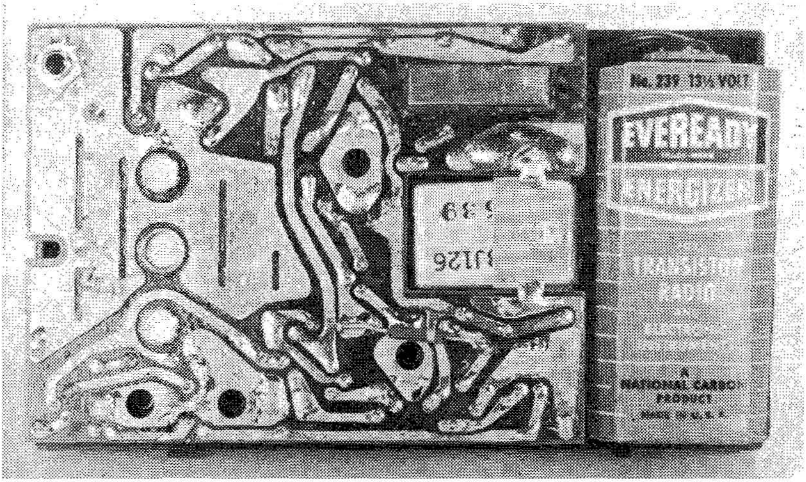

Fig. 5-13: Rear view... with back cover removed... of the Model 675 receiver shown in Fig. 5-11. The dual-voltage battery is on the right.

The general Alignment procedure used is virtually identical to that employed for aligning the TR-1 series, except that the I.F. transformers are peaked at 455 KC, the oscillator coil's (T2) core at 600 KC, and the oscillator's trimmer (C1D) at 1620 KC. Two different peaks may be obtained when adjusting T2's core; the correct point is the one which moves the core farthest into the coil. If the receiver cannot be peaked at 1500 KC, check the shield between the antenna coil and other components; moving this shield closer to T1 sometimes increases set sensitivity at the high end of the band. If the 600 KC peak is strong and the 1500 KC peak weak, and cannot be improved by the adjustment suggested, it may indicate that the converter transistor (X1) is "weak" and should be replaced.

If any of the R.F.-I.F. transistors are replaced (X1, X2, or X3), R7's value may have to be readjusted for optimum performance. Before doing this, check that a fresh battery is used in the power supply. Start with a value of 470 ohms for R7 (½ or ¼ watt); try values to either side. When regeneration (oscillation) occurs, use the resistor value *just below* the lowest value where this takes place. This step will insure maximum circuit gain consistent with good overall stability.

SIX-TRANSISTOR RECEIVERS. As a general rule, the 6-transistor receiver has a sensitivity, selectivity, and power output quite comparable to . . . if not slightly better than . . . that of a typical five-tube line-operated table model or better quality tube-operated portable receiver. Thus, the 6-transistor set, considered as a broad class, rep-

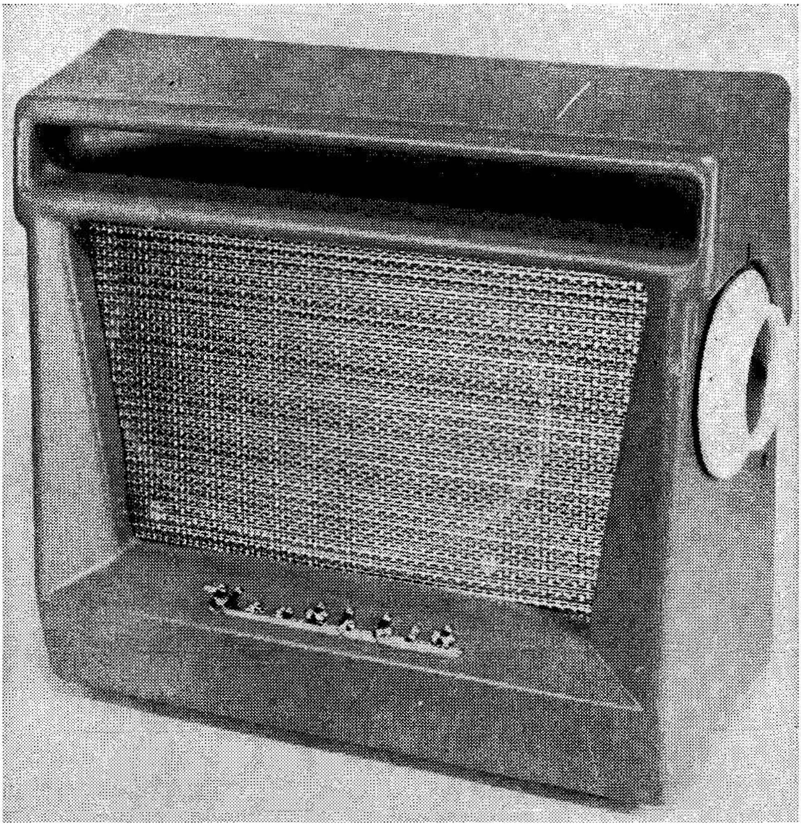

Fig. 5-14: Overall view of the HEATH Model XR-1 receiver. This "full size" portable receiver uses a moderate size oval loudspeaker and is powered by standard flashlight batteries. It is sold in "kit" form.

resents about the closest approach to a "standard" as one encounters in transistorized receivers. These sets are manufactured in a great variety of sizes, cabinet designs, and price ranges, and employ a number of different circuit arrangements. Statistically, there are probably more 6-transistor receivers in consumer hands than any other class, and the practical radio-TV service technician will encounter such sets most often in his daily work. For this reason, we will examine the circuits of several popular 6-transistor sets.

The Heath XR-1 is a "full-size" portable receiver distributed in kit form. An exterior view of this set is shown in Fig. 5-14, a rear view of the set, with back cover removed, in Fig. 5-16, and an interior front view of the receiver in Fig. 5-17; its schematic wiring diagram is given in Fig. 5-15.* Using six transistors and two diodes, the XR-1 is powered by six size "D" flashlight cells connected in series to supply 9 volts; these batteries provide from 500 to 1,000 hours service

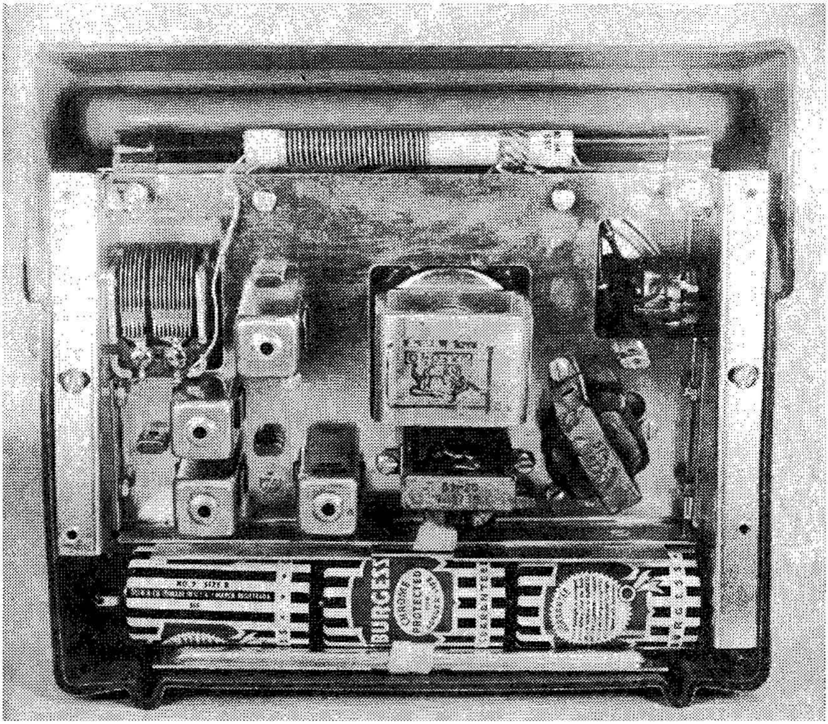

Fig. 5-16: Rear view of the XR-1 receiver, with back cover removed. Note that "conventional" chassis-type construction is used instead of an etched circuit board.

---

*(See Page 137).

in normal operation. The set is equipped with a high gain ferrite core antenna coil and receives the AM Broadcast Band from 538 to 1680 KC; its output is obtained through a 4″ x 6″ oval PM loudspeaker, assuring good tone quality. The receiver is assembled using conventional "chassis" type construction rather than an etched circuit board.

An examination of the schematic diagram given in Fig. 5-15 reveals that the XR-1's circuit bears a strong resemblance to the basic circuit of the TR-1 receiver analyzed several pages back, but with the addition of a Class B push-pull power amplifier after the audio stage. As in the TR-1G, *NPN* transistors are used in the converter and two I.F. amplifier stages, with *PNP* units employed in the audio section. The common-emitter configuration is used in all stages. A further study indicates that the basic operation of the converter, including the local oscillator section, of the two I.F. stages, of the detector, and of the first audio amplifier is quite similar to that of the earlier receiver. The operation of the push-pull output amplifier, of course, is standard (for a detailed discussion of such circuits, refer to Section 3). For example, AVC control bias is obtained from the 2nd

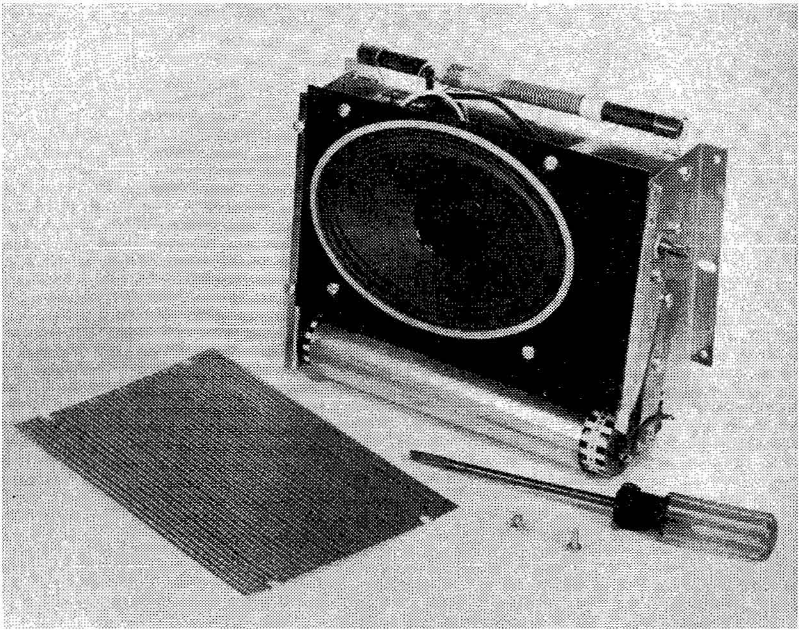

Fig. 5-17: Front view of the XR-1 receiver, with cabinet and speaker grill removed The long loopstick antenna is mounted on insulating clamps across the top of the chassis.

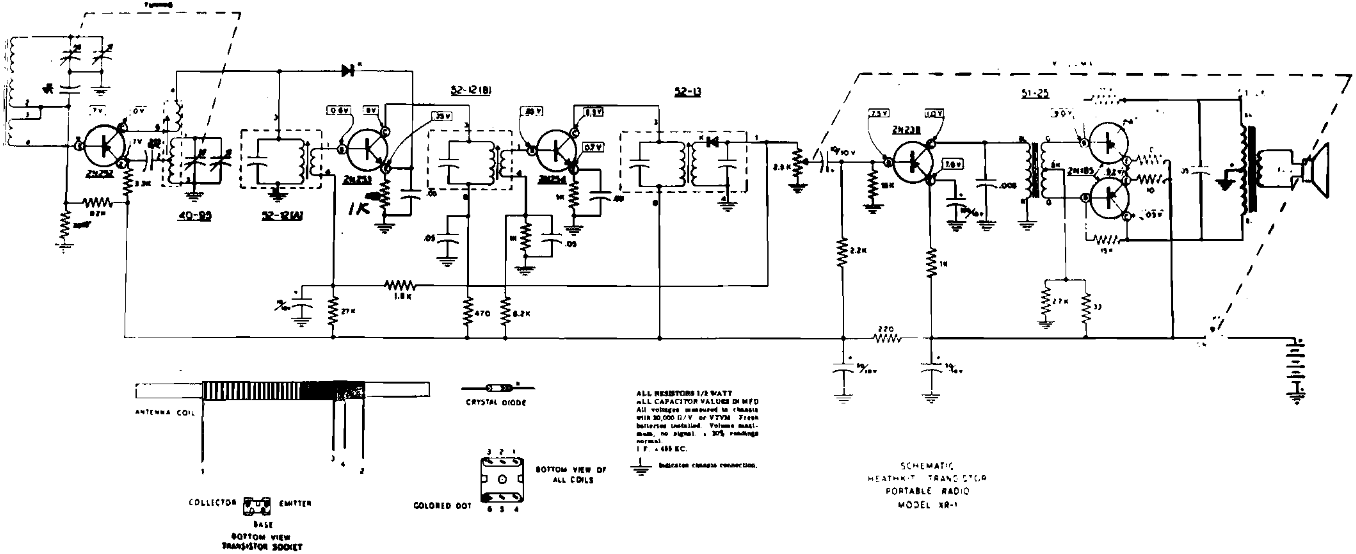

Fig. 5-15: Schematic wiring diagram of HEATH's XR-1 receiver. Note the use of a push-pull audio output stage.

detector and is coupled back and applied only to the base of the 1st I.F. stage. The chief differences are in the operating voltages, in exact component values, and in the individual stage decoupling methods employed; and we note that I.F. stage neutralization is *not used*. Neutralization is not needed in this circuit due to the operating parameters of the specific transistor types employed, the circuit layout used, and the characteristics of the I.F. transformers and other components.

But there is an "extra" diode in the XR-1 . . . it is connected between the "hot" side of the first I.F. transformer and the emitter of the first I.F. stage. To understand the reason for this diode, we must recall a basic difference between the operation of vacuum tubes and transistors. In both types of devices, stage gain may be controlled by adjusting operating bias; the vacuum tube, however, *has a much wider range of control.* Thus, the AVC circuit of a tube-operated receiver can handle, without overload, much stronger signals than can be handled by a comparable transistorized radio set. To compensate for this, a diode may be added to the transistor circuit to provide an extra measure of control over stage gain when strong signals are received; in essence, the diode increases the effectiveness of the receiver's AVC circuit.

To see how the diode does its job, let's consider its operation. Under "normal" conditions, the I.F. stage has a reasonable bias, as furnished to its base through the 27K base bias resistor. Collector current is normal, and a small voltage is developed across the I.F. stage's 1K emitter resistor. This voltage bias the diode in its non-conducting or "high-resistance" direction. For practical purposes, then, the diode is simply a high-resistance shunt across the primary winding of the first I.F. transformer; since its resistance is quite large, it has little or no effect on circuit operation. Suppose, now, that a *very strong* signal is picked up. When this happens, an appreciable AVC control signal can be developed by the second detector. Applied back to the 1st I.F. stage, this AVC control reduces stage bias and causes the transistor's *collector current to drop.* A reduction in collector current, in turn, causes a drop in the D.C. voltage developed across the emitter resistor, reducing the "reverse" bias voltage applied to the diode. When this happens, the diode's effective resistance drops, and it acts more and more like a resistive shunt across the first I.F. transformer. This, of course, reduces the overall gain of the converter stage, and drops the level of the signal applied to the first I.F. stage, compensating for the increased amplitude of the strong signal. Since the diode is most effective against very strong "overload" signals, it is frequently called an *overload diode.* As we shall see, overload diodes are used in a number of circuits, although their exact connections may vary from one set to another. In every case, however, their basic function is the same.

As far as Alignment is concerned, the XR-1 may be adjusted using essentially the same techniques described in our discussion of the Regency TR-1G and GE Model 675 receivers. The set's I.F. is 455 KC.

While the XR-1 uses *NPN* transistor types in its R.F.-I.F. stages and *PNP* in its audio section, another popular 6-transistor receiver, the Automatic Radio Model PTR-15, uses *PNP* units in all stages; R.F. types are used in the converter and I.F. stages, audio types in the audio section. This receiver is shown in Fig. 5-18, with its schematic diagram given in Fig. 5-19; the set's interior layout is shown in Fig. 5-20. Transistor socket voltages and general Alignment data are given in Table 5-A. The PTR-15 tunes from 540 to 1610 KC and has a sensitivity of 150 microvolts per meter for an average output of 50 milliwatts. Operating on six size "D" flashlight cells

Fig. 5-18: AUTOMATIC RADIO's Model PTR-15 "all-transistor" receiver. Such a designation was adopted by some manufacturers to distinguish their receivers from the "hybrid" transistor sets discussed in Section 4.

connected in series to supply 9 volts, this set can deliver an unidistorted output of 250 milliwatts to its built-in 5″ PM loudspeaker An almost identical circuit is used in the Firestone Model 4-C-33 receiver.

Referring to Fig. 5-19, we note both similarities . . . and differences . . . in this circuit as compared to that of the XR-1. Component values are different, of course, since different types of transistors are employed; and the polarity of the D.C. bias voltages applied to the first three stages is reversed, since *PNP* units are used here. However, the common-emitter configuration is used in all stages, and overall circuit functions are similar; the set includes a converter, two I.F. amplifiers, a diode detector, single-ended Class A audio amplifier, and push-pull Class B power output stage. An AVC control voltage is obtained from the 2nd detector and coupled back through R9, bypassed by C4, to the 1st I.F. amplifier; in this case, however, a *positive-going* control signal is used, due to the different bias requirements of the *PNP* transistor. The 1st and 2nd I.F. stages are neutralized by signals coupled back from their respective I.F. transformers through C5 and C9, in order. An overload diode is used, but, in the PTR-15, is connected between the first I.F. transformer (T1) and the juncture of the 1st I.F. stage's decoupling resistor, R6, and its bypass capacitor, C7; its basic operation is similar to that of the overload diode used in the XR-1, however, since the voltage drop across R6 will vary with the stage's AVC bias (and collector current). Under normal conditions, the voltage drop across R6 is greater than that across the converter's decoupling resistor, R4, and the diode is biased in its high resistance direction. When a strong signal is

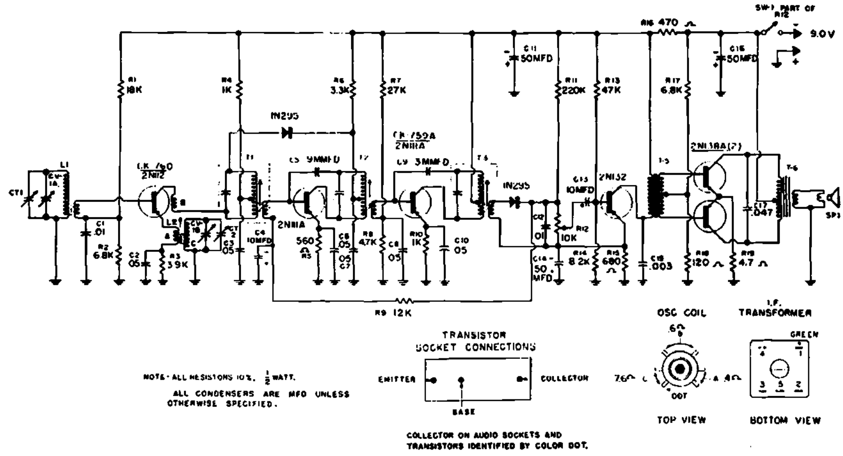

NOTE: ALL RESISTORS 10%. ½ WATT.
ALL CONDENSERS ARE MFD UNLESS OTHERWISE SPECIFIED.

COLLECTOR ON AUDIO SOCKETS AND TRANSISTORS IDENTIFIED BY COLOR DOT.

Fig. 5-19: Schematic diagram of the PTR-15 receiver.

received, the AVC signal applied to the 1st I.F. amplifier causes a drop in its collector current, reducing the voltage drop across R6 and, eventually, permitting the diode to become an effective shunt across T1's primary, reducing converter gain.

There is one other difference between this circuit and the ones we have examined earlier. Note that the I.F. transformers (T1, T2, and T3) have *tapped primaries.* This is done for two reasons . . . first, by "tapping down" on the coil, auto-transformer action provides a better overall match between the very high impedance of the tuned circuit and the moderately high output impedance of the transistor's collector circuit, thus minimizing circuit loading and insuring higher Q and better selectivity; second, the signal available from the "far" side of the tap may be used for neutralization purposes.

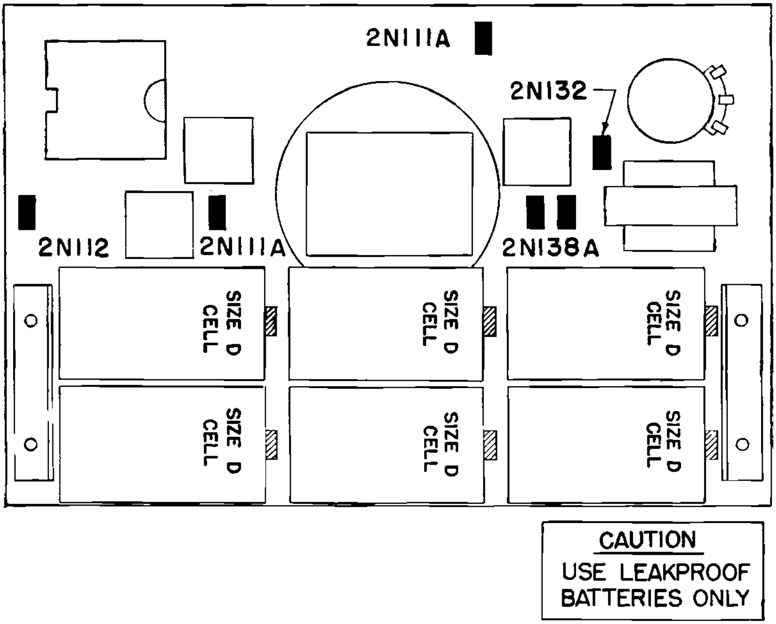

Fig. 5-20: Chassis and battery layout used in the PTR-15 receiver.

The schematic diagram of another popular 6-transistor receiver is given in Fig. 5-21. This set, the Magnavox Model CR-744, is similar to the PTR-15 we have just discussed in overall circuitry, but differs from it in physical size and in several circuit details. Like the PTR-15, the CR-744 uses *PNP* transistors in the common-emitter configuration in all stages, and includes a converter, two I.F. stages, a diode 2nd detector, a single-ended Class A audio driver, and a

Class B push-pull power output stage driving a PM loudspeaker. Further, it employs "tapped" I.F. transformers, and obtains its AVC control signal from the 2nd detector, with this signal applied *only* to the base of the first I.F. amplifier (through R11, bypassed by C6).

TRANSISTOR SOCKET VOLTAGES *

Socket	Transistor in			Transistor Out		
	C	B	E	C	B	E
2N112	-6.5	-1.5	-1.5	-9.0	-2.0	0
2N111A 1st	-4.0	-1.0	-0.7	-9.0	0	0
2N111A 2nd	-7.0	-1.4	-1.1	-9.0	-2.0	0
2N132	-5.5	-1.0	-1.0	-9.0	0	0
2N138A	-9.0	-0.5	0	-9.0	0	0

* Note: Voltages measured with supply voltage 9.0 VDC and chassis at plus (+) potential.

(a)

ALIGNMENT PROCEDURE

Volume Control: Maximum, all adjustments

Dummy Antenna: .1 MFD in series with generator output lead

Signal Generator ground connection to chassis.

Generator Frequency	Tuner Setting	Generator Connection	Adjust for Max Output
455 KC	Fully open	2N112 Base	T3 slug
455 KC	Fully open	2N112 Base	T2 slug
455 KC	Fully open	2N112 Base	T1 slug
1610 KC	Fully open	2N112 Base	Osc trimmer of gang (CV 1-B)
1400 KC	Tune in signal from gen.	Loosely couple gen. to Antenna Loop	Antenna trimmer of gang (CV 1-A)

(b)

TABLE 5-A: Service data for the PTR-15 radio set. Transistor socket voltages are given at (a), alignment data at (b). The alignment table given, while applying specifically to the PTR-15, may be used as a guide for aligning virtually ANY six transistor AM Broadcast Band.

However, unlike the other receiver, the CR-744 is a "personal" sized portable, is equipped with a 2¾ inch PM loudspeaker, and can deliver a maximum power output of 90 milliwatts. It is powered with a 4-volt mercury battery, and has its component values adjusted accordingly. Its I.F. is 455 KC. The overload diode is not used here, and a different neutralization arrangement is employed. In the CR-744, the neutralization networks are connected between the base of one stage and the secondary of the following I.F. transformer; thus, Q2's neutralization is provided by C9 and R9, and Q3's by C10 and R10.

RCA's Model 7-BT-9J represents another approach in the design of a 6-transistor pocket-sized "personal" set. An exterior view of this set is given in Fig. 5-22, with an interior view, showing battery replacement technique, given in Fig. 5-24; chassis layout is illustrated in Fig. 5-25. The set's schematic diagram is given in Fig. 5-23. Using an I.F. of 455 KC, this receiver tunes from 540 to 1600 KC, and can

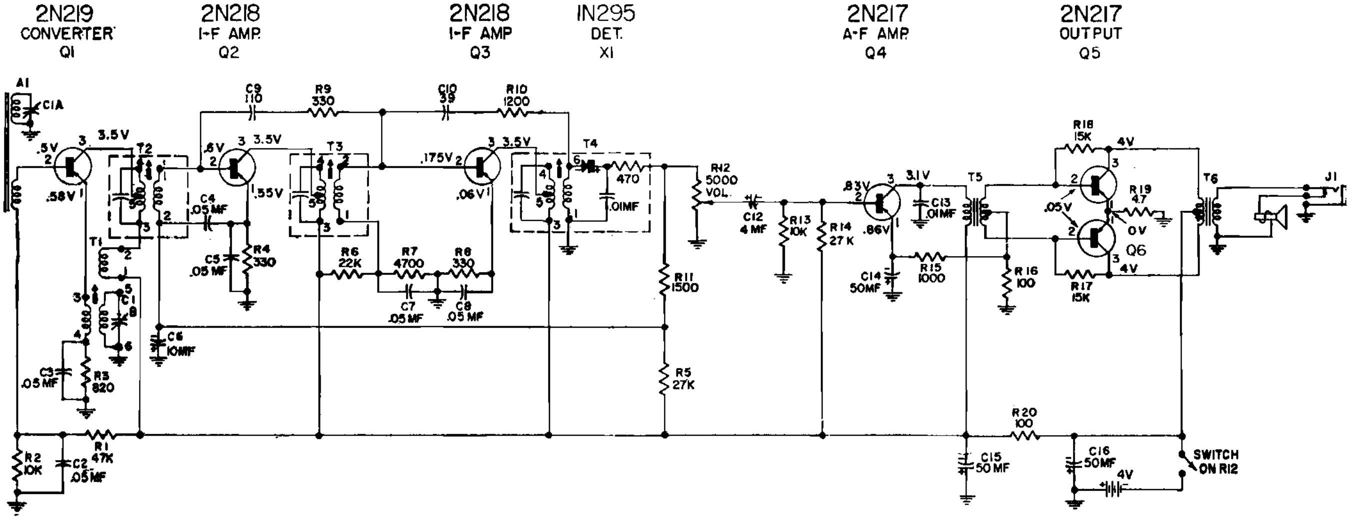

Fig. 5-21: Schematic wiring diagram of the MAGNAVOX Model CR-744 receiver. Note that this six transistor receiver requires ONLY FOUR VOLTS for operation.

supply an undistorted power output of 65 milliwatts to its built-in 2¾ inch PM loudspeaker; maximum power output is 100 milliwatts. It uses a 9 volt battery and requires approximately 6 MA for operation under "no signal" conditions, giving a battery life of about 75 hours under intermittent service.

Referring to Fig. 5-23, we see that the 7-BT-9J uses *NPN* transistors in its converter and I.F. stages and *PNP* units in its audio section. With the common-emitter configuration used in all stages, the set includes a converter, two I.F. amplifiers, a diode detector, a single-ended Class A audio stage, and a push-pull Class B power amplifier. Using tapped I.F. transformers, and with an AVC control signal obtained from the 2nd detector and applied, through R12, bypassed by C8, to the base of its 1st I.F. stage, the receiver's circuitry is generally similar to that used in the other receivers we have reviewed. However, the 7-BT-9J has several interesting circuit features not found in the other sets.

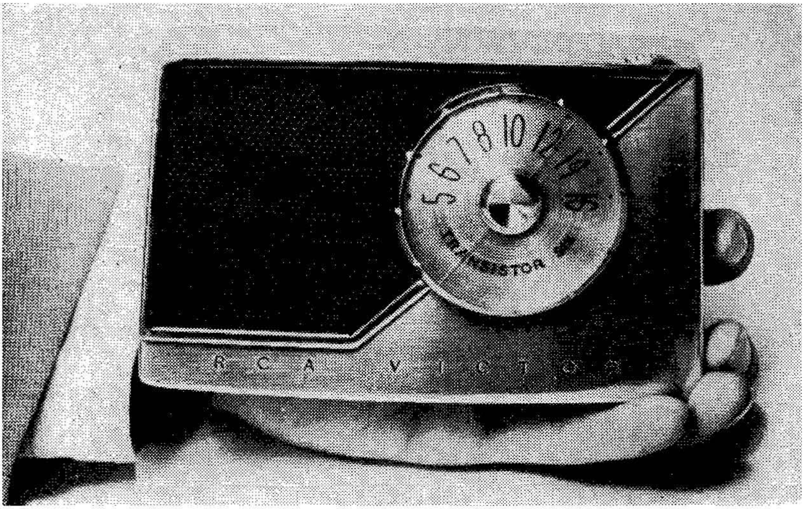

Fig. 5-22:—Overall view of the RCA Model 7-BT-9J superhet receiver.

First, a *thermistor* is used in the bias circuit of the push-pull power amplifier. This component, R19, automatically adjusts stage bias with changes in ambient temperature conditions and thus assures distortion-free operation at all times.

Second, I.F. neutralization is obtained by using tapped *secondary* windings on interstage I.F. transformers T2 and T3, with the "far" side of the winding returned through appropriate D.C. blocking capacitors (C5 and C9) to the emitter electrodes of the I.F. stages.

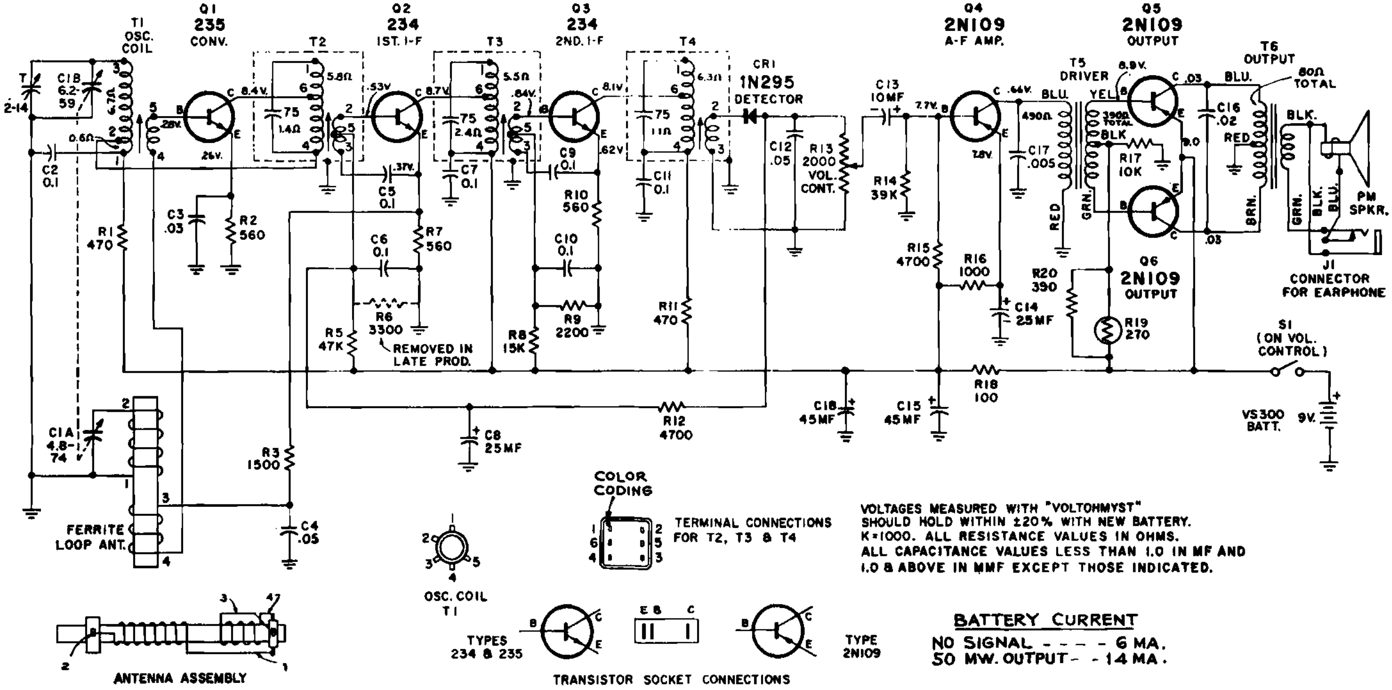

VOLTAGES MEASURED WITH "VOLTOHMYST"
SHOULD HOLD WITHIN ±20% WITH NEW BATTERY.
K=1000. ALL RESISTANCE VALUES IN OHMS.
ALL CAPACITANCE VALUES LESS THAN 1.0 IN MF AND
1.0 & ABOVE IN MMF EXCEPT THOSE INDICATED.

BATTERY CURRENT
NO SIGNAL - - - - 6 MA.
50 MW. OUTPUT - - 14 MA.

Fig. 5-23: Schematic diagram of the 7-BT-9J radio set. Note that a thermistor (R19) is used as part of the output stage's biasing network.

Third, AVC control is applied to the converter stage as well as the 1st I.F. amplifier. This is accomplished by obtaining the converter's base bias from the emitter electrode of the I.F. amplifier. Thus, the D.C. voltage appearing across emitter resistor R7 is applied through R3, bypassed by C4, as Q1's base bias. Since this voltage varies with changes in Q2's collector current, and hence with the AVC signal applied to Q2's base through R12, it becomes an effective control signal. In essence, the 1st I.F. stage, Q2, serves as a D.C. AVC amplifier for the converter, Q1.

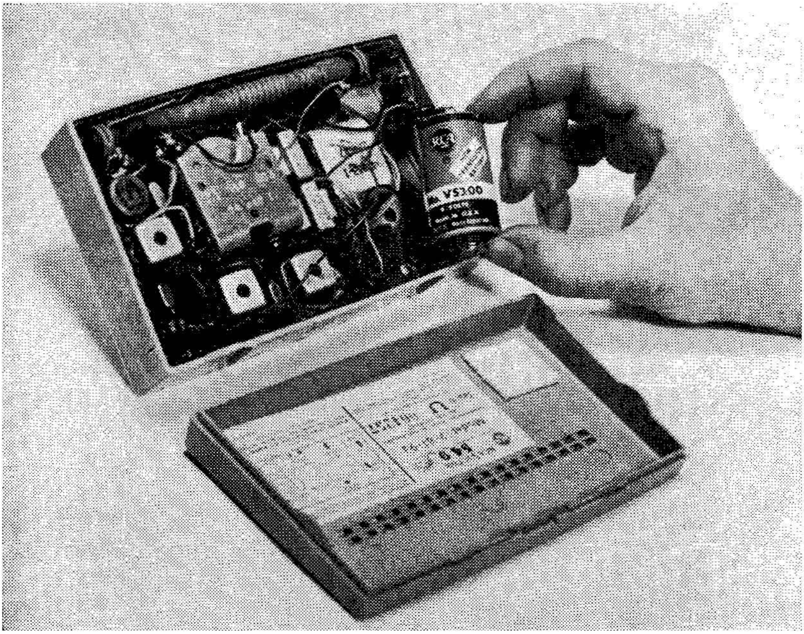

Fig. 5-24: Rear view of the 7-BT-9J receiver with back cover removed. Proper technique for battery replacement is shown.

As commonly occurs in the manufacture of transistorized receivers, a number of circuit changes were made in the 7-BT-9J during its various production runs. In a few receivers, R11 was replaced by a jumper. In some sets, R5 had a value of 22K; when it was changed to 47K, as shown in Fig. 5-23, R6 was omitted. R17 has a value of 12K in some sets, 10K in others. C18, shown in parallel with C15 in the schematic, was added during later production runs, and may not be found in early sets. R2 has a value of 390 ohms in some sets, 560 ohms (as shown) in others. In late model receivers, R3 was removed and replaced by a 150K resistor connected between the juncture of C4 and the antenna lead and the junction R1-R18. This last change, of course, removed AVC control from the converter stage; to compensate for this, an overload diode was connected between Q2's collector and the junction C11-R11, with its cathode connected to Q2.

Intermediate in size between "pocket" receivers like the RCA 7-BT-9J and Magnavox CR-744 and "full-size" portables like the Heath XR-1 and Automatic Radio PTR-15, the Dumont Model 1210 (RA-902) is equipped with a 3½" PM loudspeaker and delivers a peak audio output of 500 milliwatts. An exterior view of this receiver is given in Fig. 5-26, and interior views with battery compartment in place and removed in Figs. 5-28 and 5-29, respectively. The set's schematic diagram is given in Fig. 5-27. With an I.F. of 455 KC, this receiver covers from 540 to 1620 KC. It is powered by six standard size "C" flashlight cells connected in series to supply 9 volts, but, in most cases, will continue to operate even if the supply voltage drops as low as 5 volts; under these conditions, sensitivity and power output are reduced somewhat, and some distortion may be evident. Requiring a current of approximately 8 to 10 MA under "no signal" conditions, the Model 1210 has a rated battery life of 300 hours.

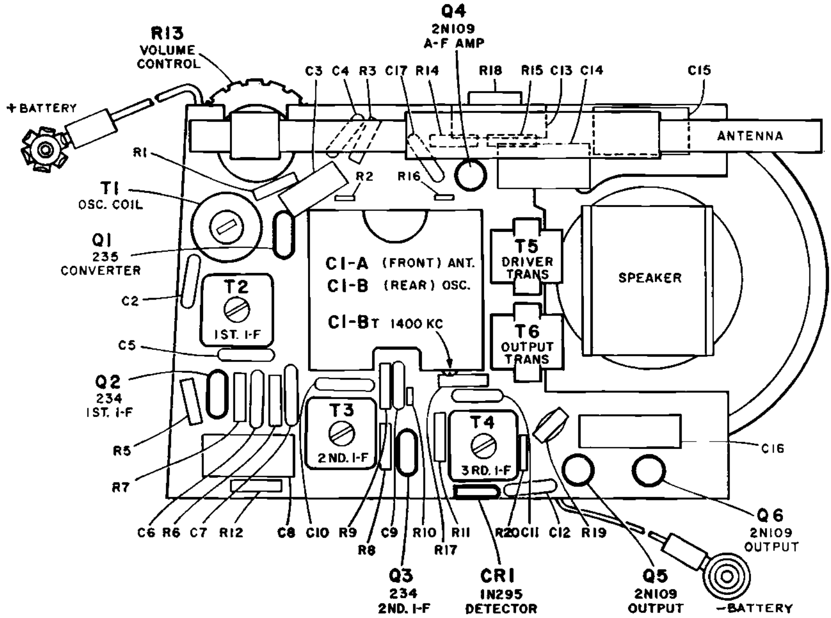

Fig. 5-25: Chassis layout used in the 7-BT-9J receiver. Compare this with the schematic diagram given in Fig. 5-23 and the rear view given in Fig. 5-24.

Referring to the schematic diagram (Fig. 5-27), we find that the set uses six transistors and two diodes, with the common-emitter configuration used in all transistor stages. *NPN* types are used in the converter and two I.F. stages, and *PNP* units in the audio driver and push-pull power output stage. One diode (CR02) serves as the 2nd detector, the other (CR01) as an overload diode. A close examination of the circuit reveals many of the features we have observed in the other receivers studied. Tapped I.F. transformers are used (T101, T102, and T103). The second detector serves not only to demodulate the amplified I.F. signal, but to provide a D.C. signal for AVC control; this is coupled through R108, bypassed by C113, and combined with a fixed bias obtained through R105, to control the gain of the 1st I.F. amplifier. Finally, we note that a thermistor, R126, is used to control the base bias current of the push-pull Class B output amplifier.

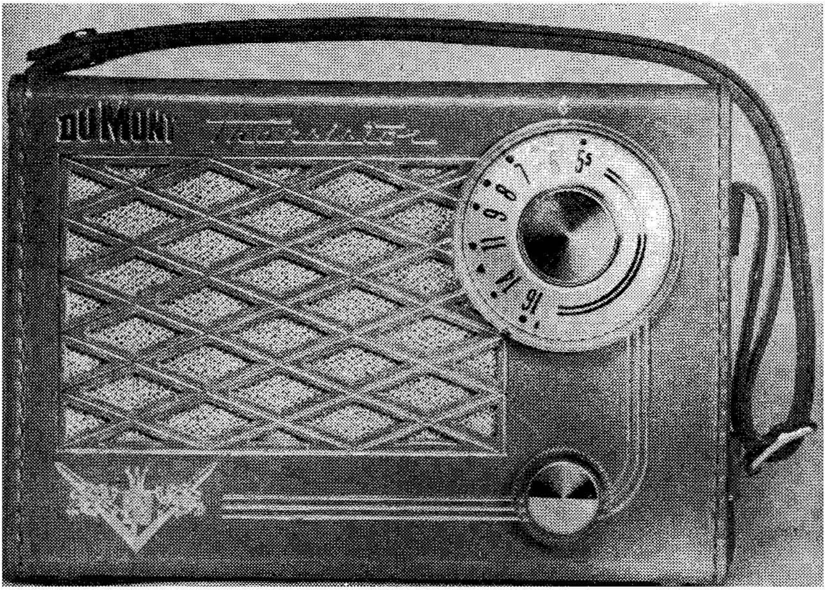

Fig. 5-26: Photo of the DUMONT Model 1210 (RA-902) receiver.

The GE Model P715D is a six-transistor receiver which typifies one approach to the design of a "semi-portable" . . . that is, a receiver which can serve equally well as a regular portable or as a table model receiver in the home or office. The Model P716D is identical except for cabinet finish. Physically, the P715D is only slightly longer and about the same width and depth as a pocket-sized "personal" portable. It is equipped with a 2¾″ PM loudspeaker and has a maximum power output of 130 milliwatts (or 100 milliwatts with not over 10% distortion). With an I.F. of 455 KC, this set covers the tuning range of 540 to 1620 KC. It may be powered by any of several battery combinations furnishing from 2.5 to 3.0 volts, including a pair of size AA penlight cells, type RM502 (or E502) mercury cells, or rechargeable nickel-cadmium cells; current drain is from 9 to 15 MA, depending on output volume.

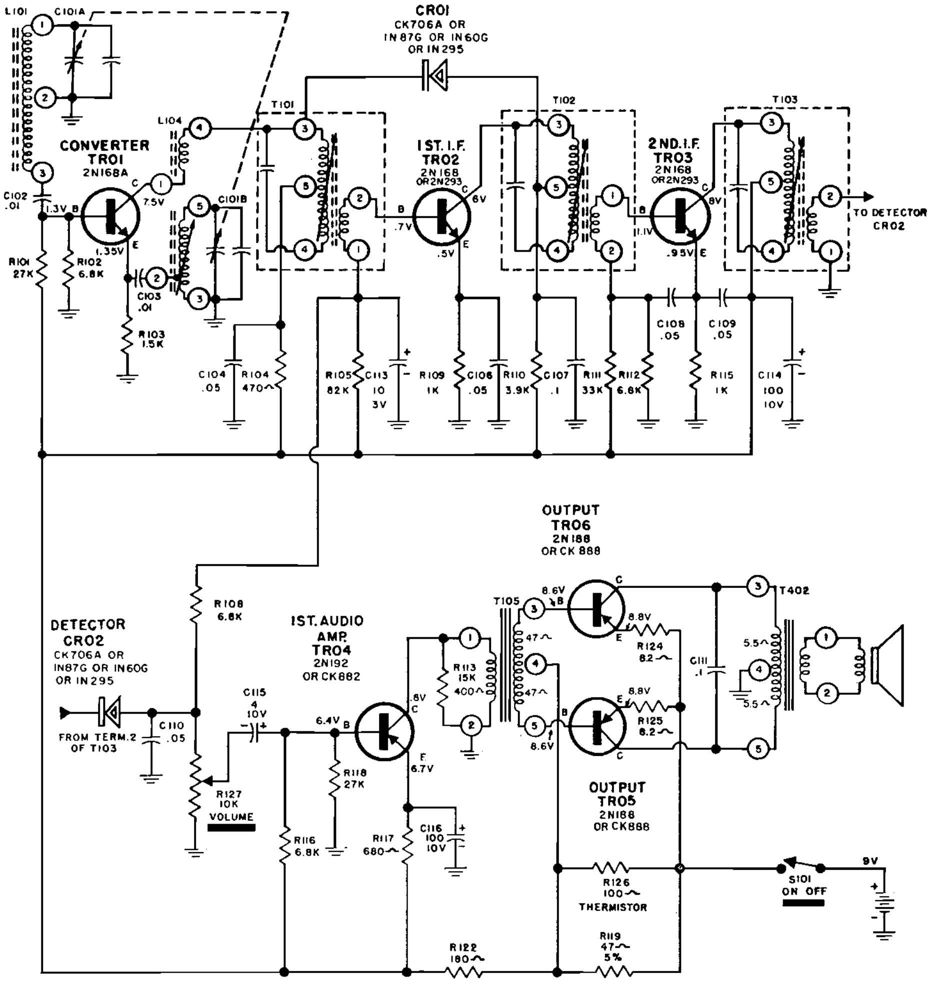

Fig. 5-27: Schematic wiring diagram of the DUMONT 1210 (RA-902) receiver shown in Fig. 5-26.

Basically a portable receiver, then, the P715D is designed to be used with an optional "carrying case." This case, in turn, is fitted with line-operated battery-charger which can deliver an output of 2.7 volts at up to 45 MA, D.C. The receiver may be folded flat within the case for traveling, or may be placed upright, in which position the entire assembly becomes a small, but attractive, "table model" receiver, as shown in Fig. 5-30. The circuit design is such that the nickel-cadmium batteries (supplied with the case, but installed in the receiver itself) can be recharged even while the receiver is being used. Of course, the receiver may be removed from its case at any time and used as a conventional portable.

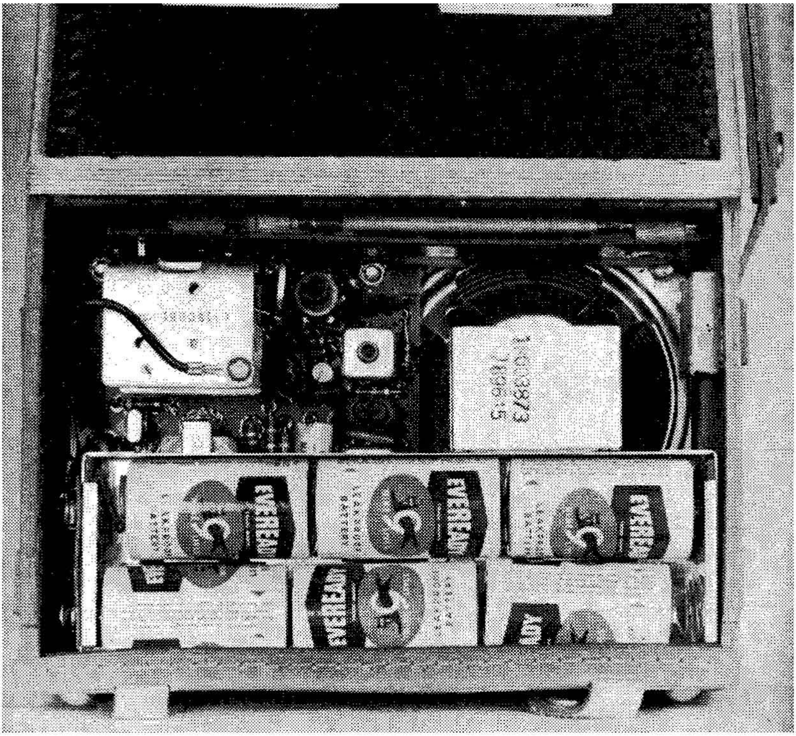

Fig. 5-28: Rear view of the 1210 (RA-902) receiver, with back cover open, showing battery compartment. Antenna coil is across the top of the chassis, tuning capacitor at upper left.

The Model P715D's schematic wiring diagram, together with that of its optional Model P-715C charger, is given in Fig. 5-31. A close-up interior view of the case, showing an exterior view of the charger section, is given in Fig. 5-32, with an interior view of the charger given in Fig. 5-33. The charger itself is a relatively simple assembly, consisting of a standard line cord, step-down transformer, diode rectifier (D2), current limiting resistor (R13), and a short output cable fitted with a plug designed to fit the *charger jack* mounted in the receiver.

An examination of the receiver's schematic diagram reveals that a fairly conventional circuit is employed. *NPN* R.F. transistors are used in the converter, (TR1), 1st I.F. (TR2), and 2nd I.F. (TR3) stages. A standard diode (D1) 2nd detector is employed. *PNP* transistors are used in the Class A audio driver (TR4) and Class B push-pull power output (TR5, TR6) stages. The common-emitter configufation is used throughout. An AVC control signal is obtained from the 2nd detector and coupled through R5, bypassed by C3, to the base bias circuit of the 1st I.F. amplifier (TR2).

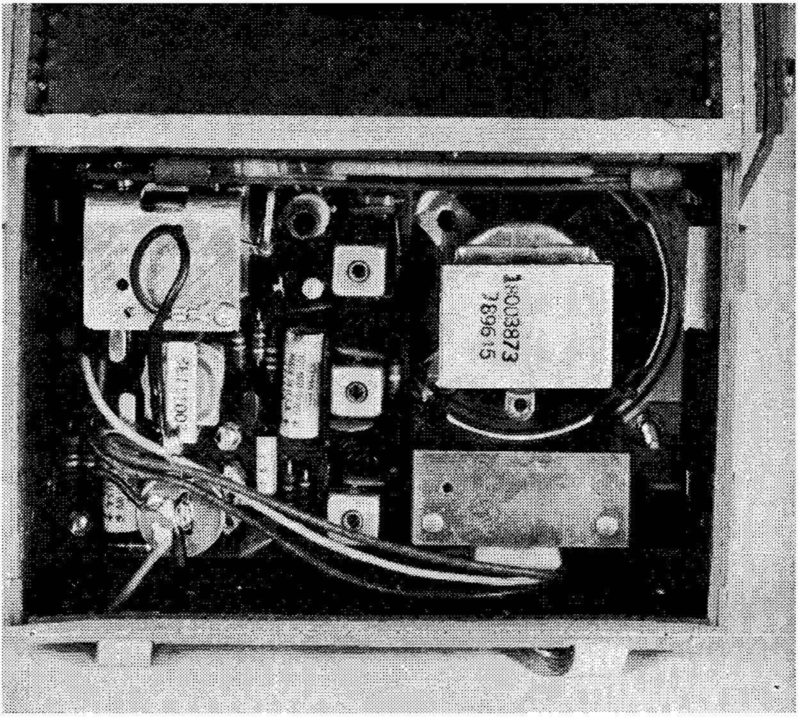

Fig. 5-29: Another rear view of the 1210 (RA-902) receiver, but this time the battery compartment has been removed, providing a clear view of the receiver chassis and the rear of the loudspeaker.

The receiver has one unusual circuit feature not encountered in the other circuits we have analyzed. The second I.F. transformer, T3, is equipped with a capacitive voltage-divider, C6-C7, rather than a "conventional" step-down secondary winding. In practice, the ratio of the capacitors used here is chosen to provide a proper match between the fairly high output impedance of the tuned circuit and the moderate input impedance of the 2nd I.F. stage, with their total series capacity designed to tune T3 to 455 KC. This unique coupling method does not affect overall performance nor change the Alignment technique used. The P715D (and P716D) may be aligned using the methods described earlier.

Fig. 5-30: The GE Model P-715D receiver, setting upright in its "travel case." Many portable receivers are designed to serve both as "portables" and as "table model" sets.

SEVEN-TRANSISTOR RECEIVERS. The schematic wiring diagram of the Firestone Model 4-C-34 radio receiver is given in Fig. 5-34. This is a "full-size" portable; for practical purposes, it is virtually identical to the Arvin Model 9562. Powered by six size "D" flashlight cells connected in series, with a "tap" to circuit ground, the set draws 6 MA from its 7.5 volt "positive" supply and 2 MA from its

1.5 volt "negative" supply under zero signal conditions. It can supply 125 milliwatts of undistorted audio power to its 5¼″ PM loudspeaker, or a maximum output of 250 milliwatts. With an I.F. of 455 KC, the radio tunes the standard AM band from 540 to 1620 KC.

Referring to Fig. 5-34, we note an overall similarity in the schematic to those of the six-transistor receivers discussed earlier. For example, the Model 4-C-34 has two neutralized I.F. stages, a diode type 2nd detector, a Class A audio driver, and a Class B push-pull power output stage; as before, a D.C. AVC bias voltage is obtained from the 2nd detector (at the junction R11-R14) and coupled back as a control over the gain of the 1st I.F. stage. Like most of the other sets we have examined, the common-emitter configuration is used in all stages.

A closer examination of the schematic, however, reveals many circuit refinements. First, of course, *NPN* transistors are used in *all* stages. As you will recall, a majority of the other sets used *NPN* types only in the R.F.-I.F. stages, with *PNP* units in their audio sections. The use of a "tapped" power supply circuit represents an innovation. And a "losser" type *Tone* control has been added to the audio amplifier; this is made up of capacitor C15 in series with R13A from collector-to-collector across the push-pull output stage. In operation, as R13A is reduced in value, C15 becomes more and more effective as a high frequency by-pass, reducing the receiver's "treble" response.

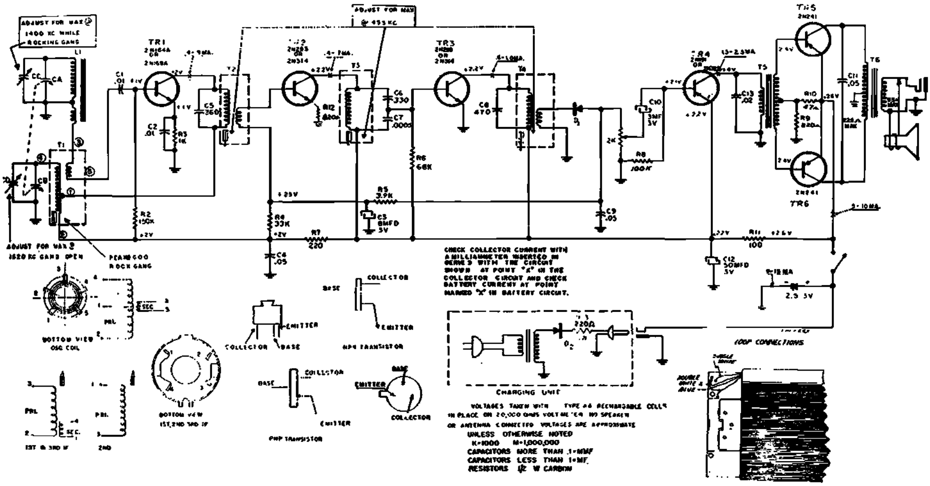

CHECK COLLECTOR CURRENT WITH A MILLIAMMETER INSERTED IN SERIES WITH THE CIRCUIT SHOWN AT POINT "X" IN THE COLLECTOR CIRCUIT AND CHECK BATTERY CURRENT AT POINT MARKED "X" IN BATTERY CIRCUIT.

VOLTAGES TAKEN WITH TYPE AA RECHARGABLE CELLS IN PLACE ON 20,000 OHMS VOLTMETER. NO SPEAKER OR ANTENNA CONNECTED. VOLTAGES ARE APPROXIMATE UNLESS OTHERWISE NOTED
K=1000 M=1,000,000
CAPACITORS MORE THAN 1=MMF
CAPACITORS LESS THAN 1=MF
RESISTORS ½ W CARBON

Fig. 5-31: Schematic diagram of the GE P-715D receiver. Featuring a 3.0 volt power supply, this set may be powered with standard penlight cells, mercury batteries, or rechargeable nickel-cadmium cells, at the option of the owner. The "charging unit" shown is part of the receiver's separate travel case.

Most of the innovations are found in the R.F.-I.F. stages, however. Let's examine these in some detail. The converter, used almost universally in the receivers discussed previously, has been replaced by a *mixer* and separate *local oscillator*. The injection of the oscillator signal is accomplished in the mixer's emitter circuit, with this signal obtained from L2's secondary and coupled through C3 to unbypassed emitter resistor R2. A variable base bias is applied to the mixer as an AVC control signal; this is obtained from the 1st I.F. stage's emitter resistor, R7, and coupled back to the mixer through voltage divider R1-R5, bypassed by C2. The voltage developed across R7 varies with the 1st I.F.'s collector current, of course, and this, in turn, is dependent on the AVC base bias obtained from the 2nd detector. In effect, the 1st I.F. amplifier, in addition to serving its normal function, also serves as an AVC D.C. amplifier for the mixer.

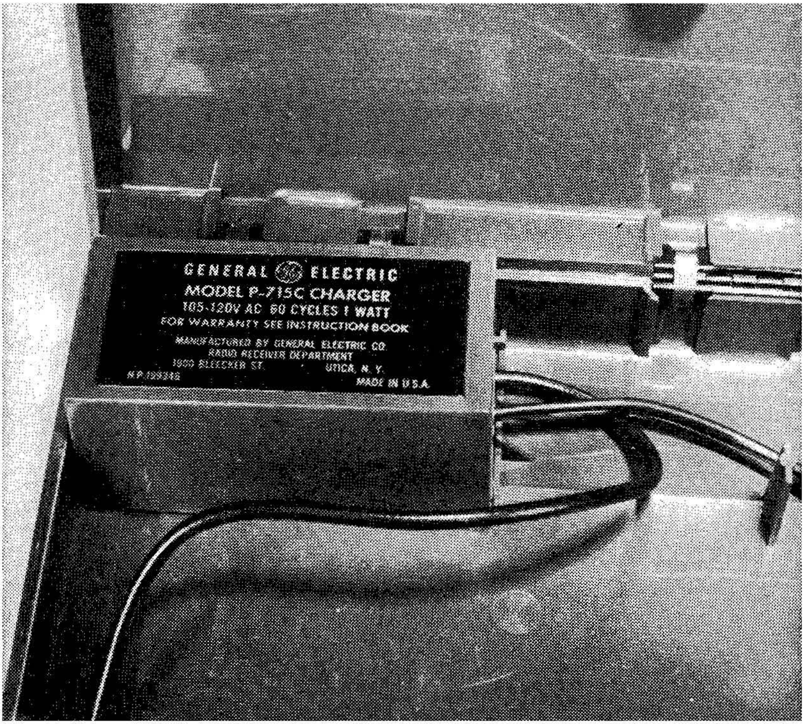

Fig. 5-32: The GE Model P-715C Charger. Mounted in one corner of the travel case for the P-715D receiver, this unit serves to recharge penlight sized nickel-cadmium cells. See Fig. 5-31 for the schematic diagram.

Continuing, a *double-tuned* first I.F. transformer (T1) is used. This represents another departure from earlier circuitry; as you'll recall, only the primary windings were tuned in the I.F. transformers used in the other sets studied. T1's tuned secondary is tapped to provide a match to the 1st I.F. amplifier's moderate input impedance, and thus to minimize loading of the tuned circuit, with resulting loss of "Q" and selectivity. A more "conventional" second I.F. transformer (T2) is employed; it has a tuned, tapped primary, and an untuned step-down secondary winding. The 1st I.F. stage is neutralized by a signal obtained from T2's primary and coupled back to its base through C8. A familiar design is used in the third I.F. transformer; T3; it has a tuned, but untapped, primary, and an untuned step-down secondary. The 2nd I.F. stage is neutralized by a signal obtained from T3's secondary and fed back to its base through C10. The remainder of the receiver's circuit is fairly conventional and, except for exact component values, similar to other circuits we have examined. The set may be aligned using standard techniques . . . an Alignment table is given in Fig. 5-34.

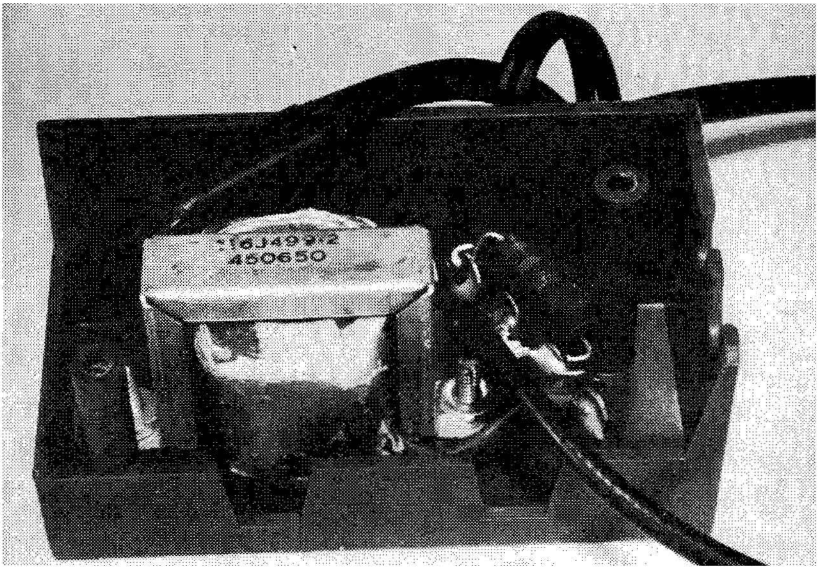

Fig. 5-33: Close-up of the P-715C Charger, after removal from the P-715D's travel case. The Charger is held in the case with two screws.

RCA's Model 8-BT-10K is another "full-size" portable receiver using a seven-transistor circuit. An exterior view of this set is given in Fig. 5-35 and its chassis layout is diagrammed in Fig. 5-37. The receiver's schematic is given in Fig. 5-36. Using a 4″ x 6″ oval PM loudspeaker, the set has an undistorted power output of 250 milliwatts, a maximum output of 300 milliwatts. It is powered by a special 9-volt battery having taps at 6 and 3 volts; current consumption

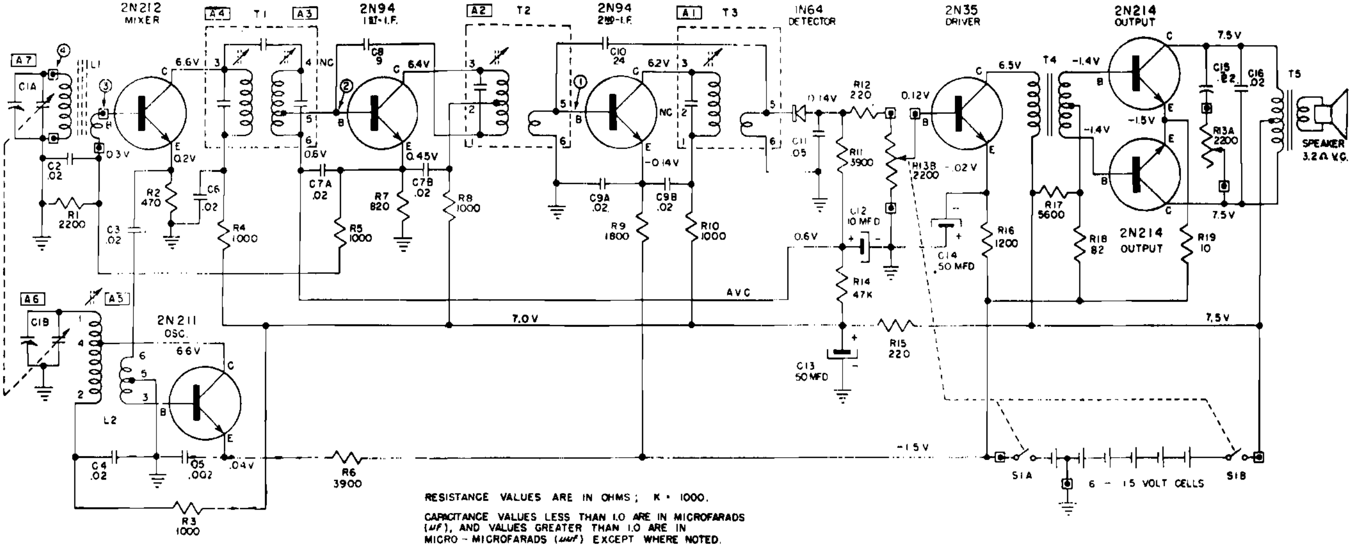

SIGNAL TEST POINT	TEST FREQUENCY	SERIES CAPACITOR TO GENERATOR	INPUT FOR .05 WATT OUTPUT (0.4 V ACROSS V.C.)
①	455 KC	.05 UF	1500 UV
②	455 KC	.05 UF	65 UV
③	455 KC	.05 UF	4.5 UV
④	1000KC	STANDARD LOOP	250 UV

RESISTANCE VALUES ARE IN OHMS; K = 1000.

CAPACITANCE VALUES LESS THAN 1.0 ARE IN MICROFARADS (µf), AND VALUES GREATER THAN 1.0 ARE IN MICRO-MICROFARADS (µµf) EXCEPT WHERE NOTED.

VOLTAGE READINGS TO COMMON GROUND ARE MEASURED WITH VACUUM TUBE VOLTMETER UNDER NO SIGNAL CONDITIONS WITH TUNING CAPACITOR CLOSED AND VOLUME CONTROL AT MAXIMUM CLOCKWISE ROTATION.

⏚ COMMON GROUND SYMBOL.

▣ EXTERNAL CONNECTION TO PRINTED CIRCUIT.

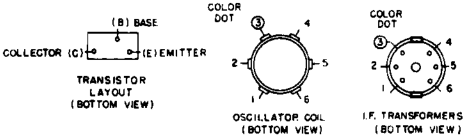

Fig. 5-34: Schematic wiring diagram of a seven-transistor receiver . . . the FIRESTONE Model 4-C-34. This set features the use of a separate local oscillator.

rises from 8 MA under zero signal conditions to 29 MA with an output of 50 milliwatts, giving a battery life of approximately 500 hours intermittent service. The set's I.F. is 455 KC; tuning range from 540 to 1600 KC.

Referring to the schematic diagram, we find that the 8-BT-10K uses *PNP transistors* in the common-emitter configuration in all stages except the first audio amplifier, Q4; here, a common-collector circuit is employed. In operation, Q1 serves as a standard converter, and Q2 and Q3 as the 1st and 2nd I.F. amplifiers, respectively. A conventional diode detector, CR1, is used, with its output direct-coupled to the 1st audio amplifier, Q4. AVC control bias is coupled back from the 2nd detector circuit through R2, bypassed by C4, to the 1st I.F. stage, and through R4, bypassed by C5, to the 2nd I.F. amplifier (Q3). The audio signal developed across Q4's emitter load, *Volume* control R8, is coupled through C9 to the 2nd audio stage, a single-ended Class A driver (Q5), and, from here, through interstage coupling transformer T5 to the Class B push-pull power output stage (Q6 and Q7). The final amplified signal is delivered to the loudspeaker's voice coil through impedance matching transformer T6. Inverse (negative) feedback is provided across the output amplifier

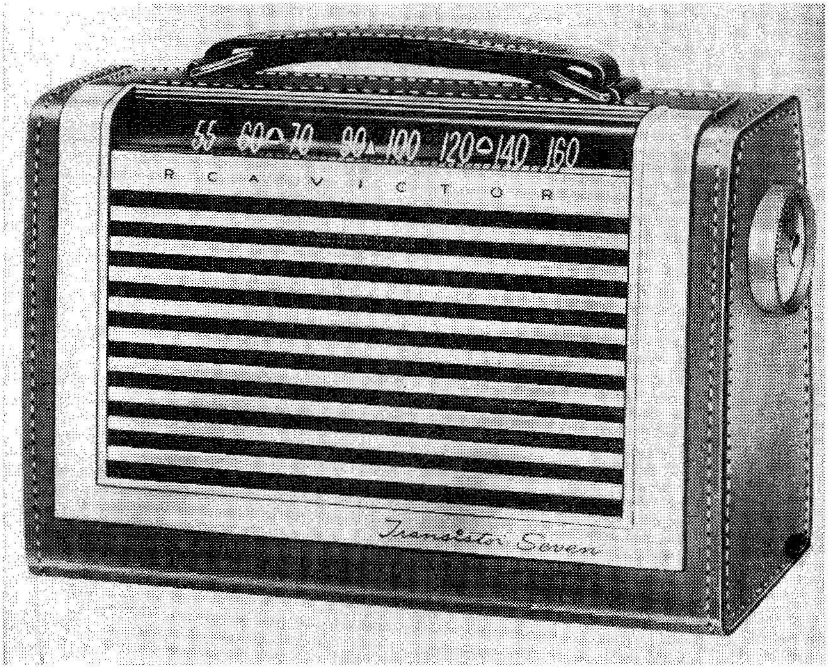

Fig. 5-35: Photo of the RCA Model 8-BT-10K, a "full-size" seven-transistor portable receiver.

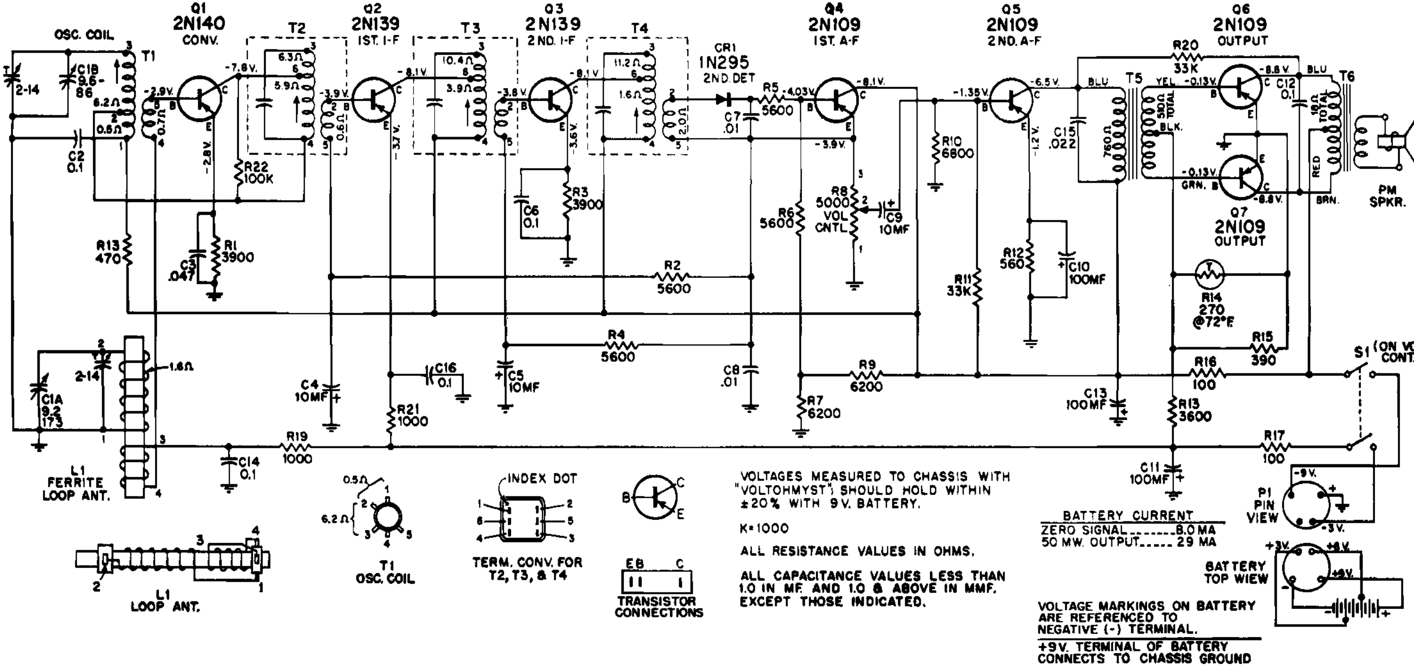

Fig. 5-36: Wiring diagram of the 8-BT-10K receiver. Note how the circuit used here differs from that shown in Fig. 5-34.

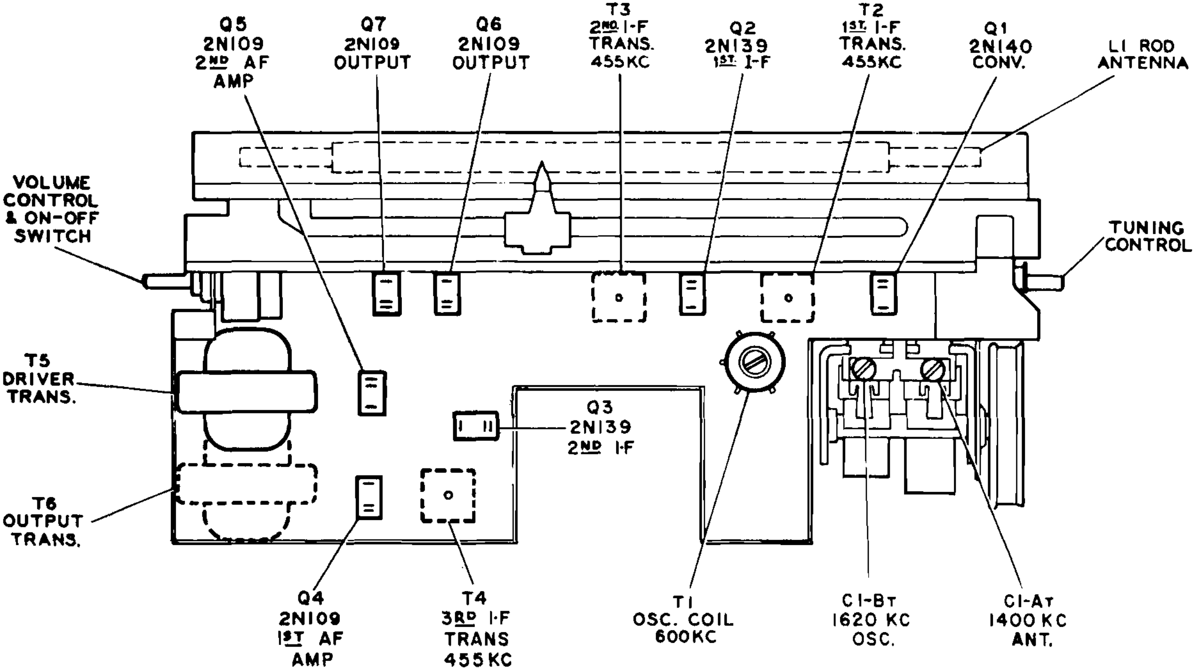

Fig. 5-37: Chassis layout used in the 8-BT-10K receiver. A "slide-rule" type dial is employed.

by R20, reducing distortion and improving circuit stability. The output stage's base bias is determined, in part, by thermistor R14, insuring consistent operation with changes in ambient temperature conditions. The receiver may be aligned using standard techniques.

The seven-transistor receivers discussed thus far have all been "portable" receivers. In contrast, the RCA Model 9TX-2 *"Starliner"* is designed specifically as a table-model battery-operated radio . . . it is *not* equipped with a carrying handle. This set's schematic wiring diagram is given in Fig. 5-38; its chassis layout is shown in Fig. 5-39. The 9TX-2 can furnish an undistorted power output of 200 milliwatts or a peak output of 300 milliwatts to its 4" x 6" oval PM loudspeaker. Designed to cover the range of 540 to 1600 KC, the set uses an I.F. of 455 KC. Operating power is furnished by a single 4.5 volt battery, but the set will operate with reduced sensitivity and output power (and slightly more distortion) on as low as 3.0 volts; operating current varies from 11.5 MA with zero output to 82 MA at the 200 milliwatt level. Under typical operating conditions, the specified battery has a useful life of 1500 hours.

An examination of the schematic diagram, Fig. 5-38, reveals that *PNP* transistors are used in all stages, with the common-emitter configuration used throughout. In operation, Q1 serves as a converter and Q2 and Q3 as the 1st and 2nd I.F. amplifiers, respectively. Tapped interstage I.F. transformers are used (T2, T3, and T4). Q2 is neutralized by a signal coupled from T3 to its base through C7; a similar arrangement is used for Q3, with neutralization provided by C10. An overload diode, CR1, is used between the converter and 1st I.F. stages. The amplified I.F. signal obtained from the last I.F. transformer, T4, is applied to Q4, a transistor used as a combination detector-first audio amplifier. Its audio output is developed across *Volume* control R17. From here, the signal is coupled through C17 to a single-ended Class A driver, Q5, which, in turn, is coupled to the Class B push-pull output stage (Q6 and Q7) through interstage transformer T5. The audio power amplifier is coupled to the loudspeaker through impedance-matching output transformer T6. A negative feedback signal is obtained from T6's secondary and coupled back to Q5's emitter through a network consisting of R22, R21, and D.C. blocking capacitor C19. The familiar thermistor, RT1, is used as part of the power amplifier's bias network.

The AVC circuit used in the 9TX-2 is rather unique compared to that used in the receivers discussed earlier, and requires further study. The AVC control bias, as in other sets, is applied to the 1st I.F. amplifier, but, unlike the others, is applied to the stage's *emitter* rather than its base circuit. Note that R8, bypassed by C8 and C14, serves as a common emitter resistor for both the 1st I.F. stage, Q2, *and* the detector, Q4. Under "zero signal" conditions, Q4 draws little,

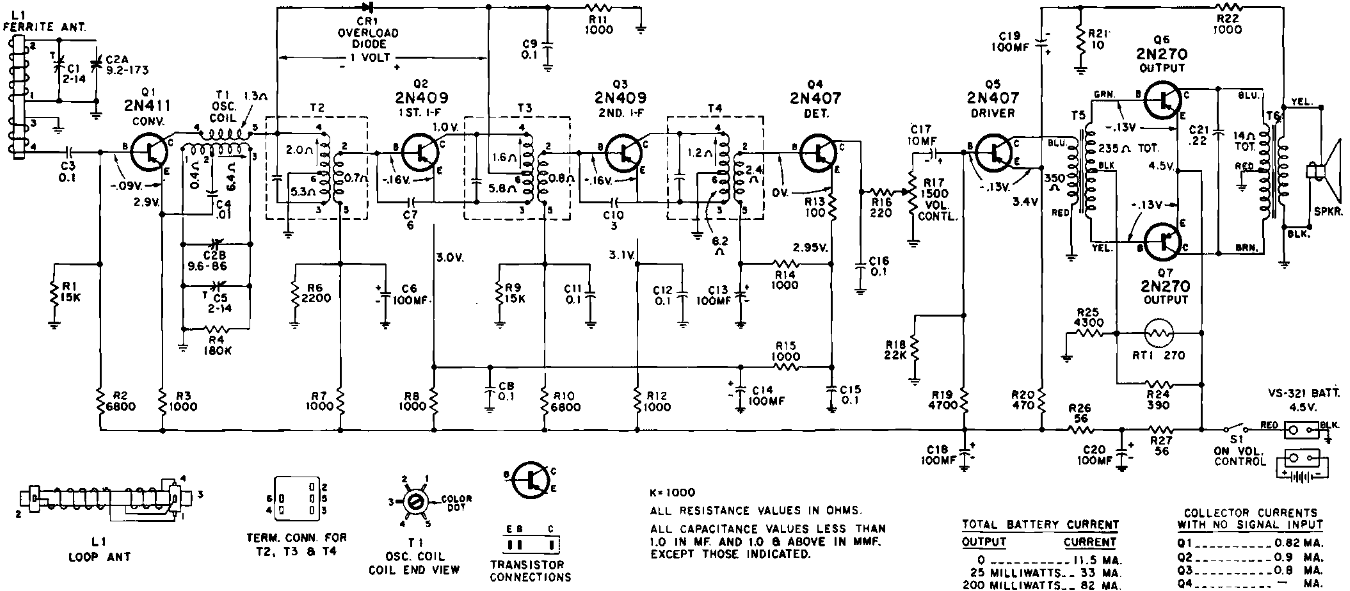

VOLTAGES MEASURED TO CHASSIS GROUND EXCEPT AS INDICATED, AND SHOULD HOLD WITHIN ±20% WITH NEW BATTERIES.

K=1000

ALL RESISTANCE VALUES IN OHMS.

ALL CAPACITANCE VALUES LESS THAN 1.0 IN MF. AND 1.0 & ABOVE IN MMF. EXCEPT THOSE INDICATED.

TOTAL BATTERY CURRENT

OUTPUT	CURRENT
0	11.5 MA.
25 MILLIWATTS	33 MA.
200 MILLIWATTS	82 MA.

COLLECTOR CURRENTS WITH NO SIGNAL INPUT

Q1	0.82 MA.
Q2	0.9 MA.
Q3	0.8 MA.
Q4	— MA.
Q5	0.9 MA.
Q6+Q7	5.2 MA.

Fig. 5-38: Schematic diagram of the RCA Model 9-TX-2 seven-transistor receiver. This is a battery-operated TABLE MODEL (rather than PORTABLE) radio.

if any, current, and the voltage drop across R8 is due entirely to Q2's "idling" current; this current, in turn, is determined by Q2's normal fixed bias, applied through voltage divider R6-R7, bypassed by C6. Under these conditions, then, Q2 has fairly high gain.

When a strong signal is received, Q4 starts to draw current, with its current requirements directly proportional to the amplitude of the signal it is detecting. This added current through R8 increases the voltage drop developed across it and *reduces the effective bias* applied to Q2, thus reducing Q2's gain. The net result, then, is typical AVC action, and the output signal is held at a reasonably constant level. Other circuit operation is conventional, and the 9TX-2 may be aligned using the methods described earlier.

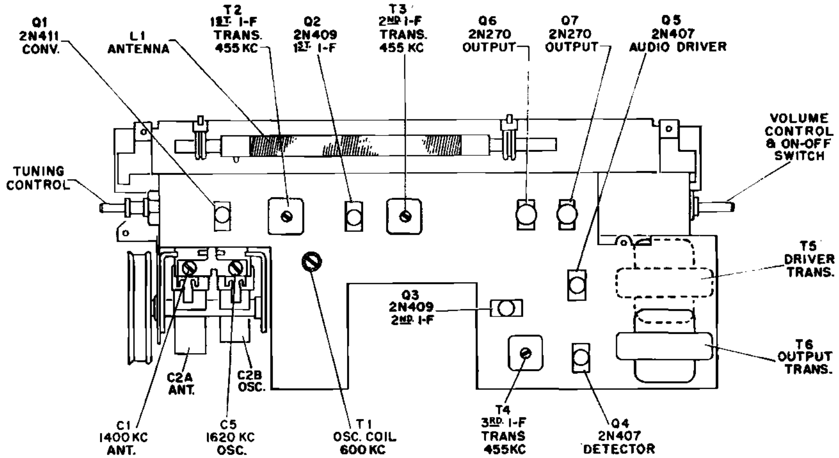

Fig. 5-39: Chassis layout used in the 9-TX-2 receiver.

RCA's Model 1-BT-3, in a sense, is a "semi-portable" designed for use both as a conventional portable and as a table-model receiver for the home and office. In this respect, it is generally similar to GE's P715D, discussed earlier in this Section, and, like the GE set, is a self-contained receiver wired so that it can be used with a line-operated battery charger, available as an optional accessory. Unlike the GE, however, the chargers designed for use with the 1-BT-3 are intended for semi-permanent installation on a table or desk and not for use (as in the GE set) as carrying cases.

The receiver's schematic diagram is given in Fig. 5-40(a) and its general chassis layout in Fig. 5-41. Using an I.F. of 455 KC, the Model 1-BT-3 tunes from 540 to 1600 KC, and delivers an undistorted power output of 85 milliwatts (or peak output of 110 milliwatts) to its built-in 2¾″ PM loudspeaker. It is designed to be operated from

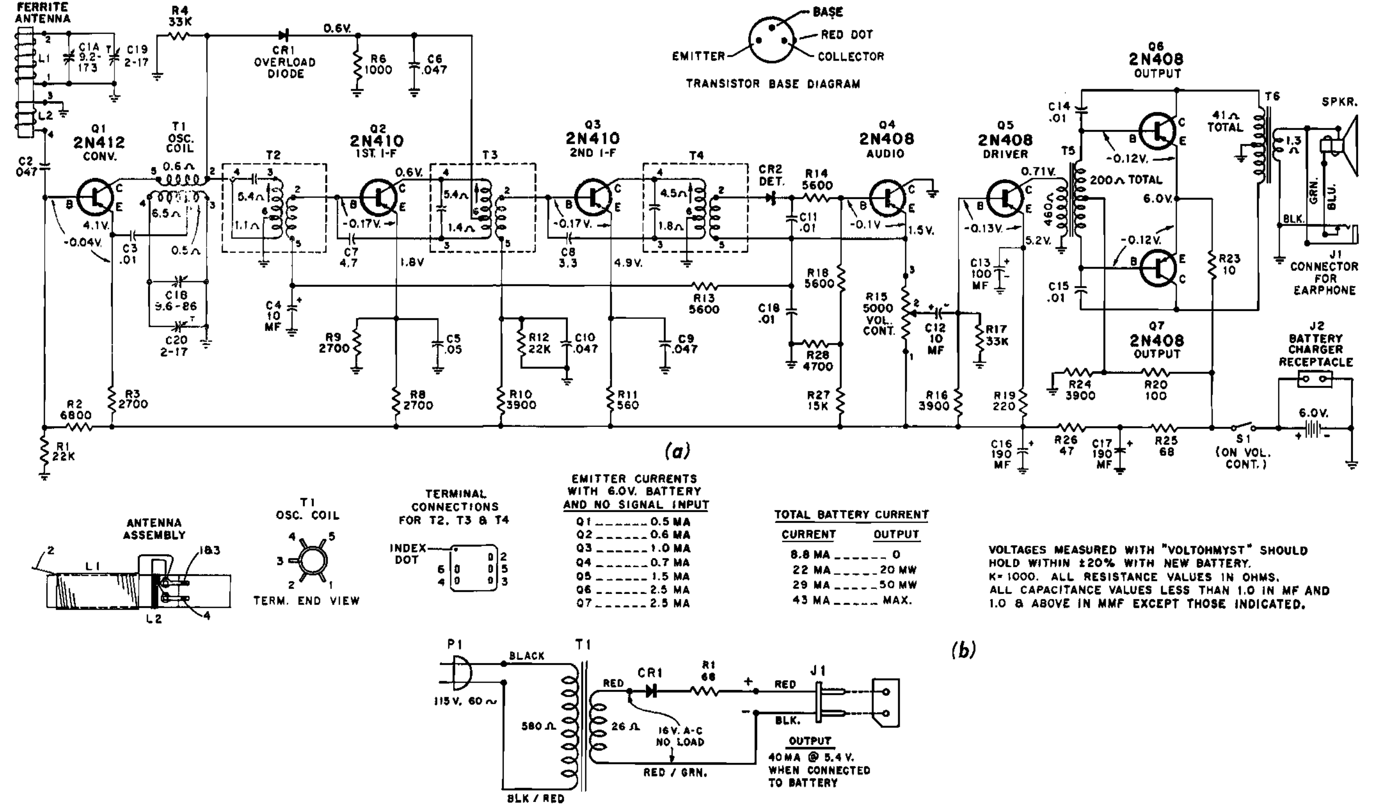

Fig. 5-40: Wiring diagram of the RCA Model 1-BT-3 receiver (a) and its separate Battery Chargers (b), DC-3 and BCS-4 . . . the latter unit includes a separate PM loudspeaker which is connected to the receiver through earphone jack J1.

four penlight cells connected in series to supply 6 volts or from a special 4.8 volt rechargeable battery; current drain varies from a little under 9 MA with zero output to about 43 MA with maximum output, giving a battery life of about 22 hours when penlight cells are used, or 25 hours per charge when the special battery is installed.

Two different charger assemblies are available for use with the

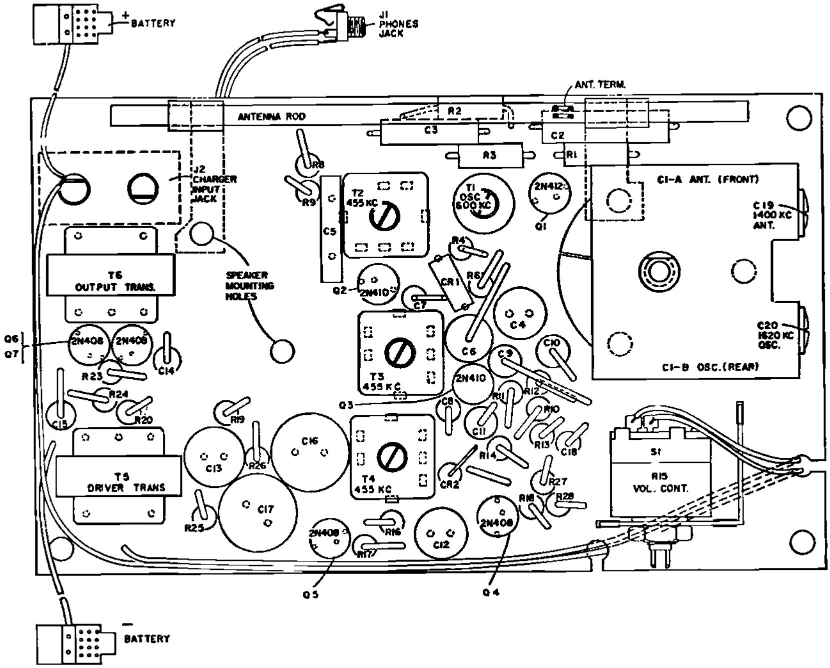

Fig. 5-41: Chassis layout used in the 1-BT-3 receiver.

1-BT-3 . . . Models BC-3 and BCS-4. Both employ the same basic charging circuit, as shown in Fig. 5-40(b); this includes a line-cord and plug (P1), step-down power transformer (T1), semiconductor half-wave rectifier (CR1), current limiting resistor (R1), and output cable and male jack (J1) to fit the battery charger receptacle mounted on the receiver itself . . . J2, Fig. 5-40(a). Designed for operation on a standard A.C. power line, the charger delivers an output of 40 MA at 5.4 volts, D.C. In addition to housing the charger, the BC-3 serves as a table stand for the radio set, holding it in an upright position. The BCS-4 serves in a similar capacity, but is larger and includes a 4″ PM loudspeaker for use in place of the set's small built-in unit; connection is made through the receiver's earphone jack. The larger loudspeaker is more efficient than the miniature unit and provides both improved tone quality and greater sound output.

Referring to Fig. 5-40(a), *PNP* transitors are used throughout. The first audio amplifier, Q4, uses the common-collector configuration; the common-emitter arrangement is used in all other stages. In operation, Q1 serves as a converter, and Q2 and Q3 as the 1st and 2nd I.F. amplifiers, respectively. An overload diode, CR1, is used between the converter and 1st I.F. stages. Tapped I.F. transformers (T2, T3, and T4) are employed. Q2 and Q3 are neutralized by coupling a small signal from their respective output transformers back to their base electrodes through C7 and C8, in order. An AVC control bias is applied to Q2's base through R13, bypassed by C4. A conventional diode-type 2nd detector is used (CR2), with its output applied to the first audio amplifier, Q4. The audio signal appearing across Q4's emitter load, *Volume* control R15, is coupled through C12 to a Class A audio driver, Q5, which, in turn, drives the Class B push-pull power amplifier (Q6, Q7) through interstage audio transformer T5. The output stage is coupled to the PM loudspeaker through output transformer T6. Inverse feedback is provided in the output stage by connecting small capacitors, C14 and C15, between the collector and base electrodes of their respective transistors; this reduces harmonic distortion and insures good circuit stability. Alignment data for the Model 1-BT-3 is given in Table 5-B (page 167).

OTHER SUPERHETS. More and more stages may be added to a basic receiver circuit to obtain better sensitivity, greater power output, or improved selectivity. If we ignore circuit details and consider overall circuit functions only, the typical six-transistor receiver is basically a four-transistor set (similar to the original Regency TR-1) with a push-pull power output stage added. Similarly, a seven-transistor receiver may be fundamentally like an average six-transistor set, but with an extra audio amplifier . . . or, in some cases, with the *converter* replaced by two transistors serving the separate functions of *mixer* and *local oscillator*. By the same token, then, an additional I.F. amplifier stage could be added to any of the seven-transistor circuits we've discussed, resulting in an *eight-transistor* set. For example, the popular Emerson 888 Series are eight-transistor sets using a converter, three I.F. amplifiers, an audio amplifier, an audio driver, and a push-pull power output stage (requiring, of course, two transistors). The Raytheon 8TP Series, as a further example, are eight-transistor sets using a mixer, separate local oscillator, two I.F. stages, a combination detector-first audio amplifier, an audio driver, and a push-pull output stage.

Since the non-technical consumer will often "rate" a product according to its size or "technical horsepower," some manufacturers may introduce multi-transistor receivers for their sales appeal rather than for reasons of engineering superiority. An "old timer" in the radio service field may recall the days when fifteen, eighteen, and even twenty tube Broadcast Band receivers were merchandised successfully, even though these sets were not appreciably better, technically, than receivers using six or seven tubes in conventional circuit arrangements. If the same approach were applied to the design of a transistor receiver, it wouldn't be too difficult for a manufacturer to introduce a set using . . . an R.F. stage, mixer, separate local oscillator, three I.F. amplifiers, transistor detector (rather than a diode), separate two-stage AVC amplifier, an audio stage, a "pre-driver" stage, a push-pull medium power driver stage, and a "hi power" output stage using multi-watt transistors. If a transistor-regulated, line-operated power supply were added to such a set, the instrument would require a total of *eighteen to twenty transistors!*

Occasionally, a basic receiver chassis may be combined with some other piece of equipment. For example, a battery-operated or spring-driven clock may be added to a standard Broadcast-Band receiver to form a *Clock-Radio.* In another case, a multi-circuit switch may be added to a receiver's audio section, and the assembly used with an external loudspeaker to form a two-station *Radio-Intercom.* At least one manufacturer (DeWald) has produced a "personal" sized portable in which the loudspeaker could be switched to the input of the audio section for use as a microphone; with a standard earphone connected, the unit could be used as a moderate gain "Hearing Aid." And, of course, a turntable and pick-up arm may be added to a standard receiver to produce a *Radio-phonograph* (see Section 9).

But regardless of the number of transistors used in a radio set or the auxiliary equipment added to it (such as a clock), the functions of individual stages remains essentially the same as those in the receivers we've discussed in the preceding pages. From a servicing and maintenance viewpoint, then, the same types of complaints are encountered, similar defects occur, and essentially the same troubleshooting and repair techniques are used.

MULTI-BAND RECEIVERS

AM Broadcast-Band receivers are by far the most popular type, with the repair of such sets representing perhaps as high as 85 to 95 per cent of the average radio-repairman's daily work load. Multi-Band transistorized receivers are manufactured, however, and are becoming increasingly popular with radio Hams, SWLs, small-boat operators, pilots, and others interested in short-wave radio, either as a hobby or as a necessary adjunct to their work. While such receivers may not be encountered too often, their repair can represent a worthwhile source of income, particularly to the service technician who specializes in such work and who actively solicits repair jobs.

As a general rule, Multi-Band receivers are larger, physically, than Broadcast-Band sets, employ more transistors and components, and are much more expensive. The majority are designed to tune the AM Broadcast-Band in addition to several short-wave bands. Most are equipped with a pilot lamp serving as a dial light, but controlled by a momentary-contact push-button or slide switch to minimize current drain; thus, the pilot lamp is used only while actually needed.

ALIGNMENT PROCEDURE

Test Oscillator—For all alignment operations, connect the low side of the test oscillator to the "common negative" wiring and keep the oscillator output as low as possible to avoid AGC action.

Step	Connect High Side of Sig. Gen. to —	Sig. Gen. Output	Dial Pointer Setting	Adjust for Max. Output
1	#2 terminal of ant. assembly L1	455 kc	Quiet point near 1600 kc	T4 3rd I-F T3 2nd I-F T2 1st I-F
2		Repeat Step 1		
3	Short wire placed near antenna for radiated signal	1620 kc	Gang fully open	osc. trimmer C20
4		1400 kc	1400 kc	ant. trimmer C19
5		600 kc	600 kc rock gang	T1 osc. coil
6		Repeat Steps 3, 4 and 5		

TABLE 5-B: Alignment data for the RCA 1-BT-3 radio set. This may be used as a general guide for the alignment of ANY seven-transistor Broadcast Band receiver.

Circuitwise, these receivers use I.F. amplifiers, 2nd detectors, and audio sections very similar . . . if not identical . . . to those found in the standard Broadcast-Band receivers discussed earlier. For example, most of these sets use a two stage, transformer-coupled I.F. amplifier operating at 455 KC, and neutralized using conventional techniques. In most cases, a one or two stage audio amplifier is used, with a Class B push-pull stage serving as a power amplifier and driving a moderate-sized (4" to 6") PM loudspeaker.

The real difference between Multi-Band and Broadcast-Band receivers, then, is found in the R.F. "front-end." Here, Multi-Band

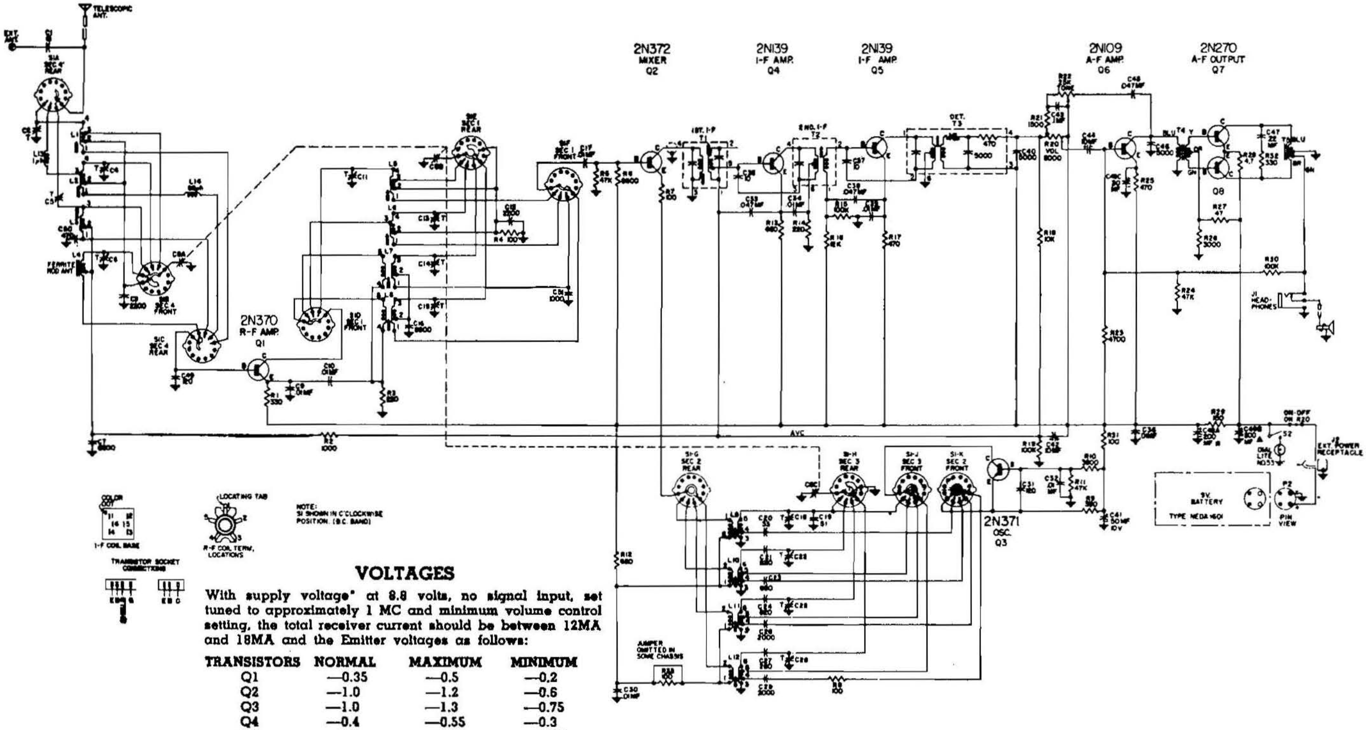

VOLTAGES

With supply voltage* at 8.8 volts, no signal input, set tuned to approximately 1 MC and minimum volume control setting, the total receiver current should be between 12MA and 18MA and the Emitter voltages as follows:

TRANSISTORS	NORMAL	MAXIMUM	MINIMUM
Q1	—0.35	—0.5	—0.2
Q2	—1.0	—1.2	—0.6
Q3	—1.0	—1.3	—0.75
Q4	—0.4	—0.55	—0.3
Q5	—0.4	—0.55	—0.25
Q6	—0.8	—1.0	—0.6

*Supply voltage should be measured with the Dial Light on and the common side of the VTVM connected to ground. Emitter voltage measured with common side of VTVM connected to junction of R29 and C48A.

Fig. 5-42: Schematic diagram of the MAGNAVOX "50 Series" receiver. This is an 8-transistor receiver covering the AM Broadcast Band and three short-wave bands.

receivers use much more complex circuitry. As we have seen, the majority of Broadcast-Band receivers employ a loop antenna coil and this, in turn, is coupled directly to a converter or mixer stage. In Multi-Band receivers, on the other hand, standard practice is to use a *tuned R.F. amplifier* ahead of the mixer, with a separate local oscillator provided. Multi-section, ganged rotary switches are em-

IF ALIGNMENT

Equipment required:

1. Signal Generator with AM Modulation
2. Oscilloscope
3. Alignment Tool, fabricated from square bakelite dowel tapered almost to a point (tapered end to be .060" square).

Connect a 10,000 ohm resistor to pin 5 of T1. Connect the signal generator through a .01 mfd. capacitor to the other end of this resistor. Set volume control at minimum and adjust output of generator to produce approximately .1 volt peak to peak on scope. Maintain generator output at low level through alignment to prevent overload. Connect scope to high side of volume control.

A peak adjustment can be found at two "slug" locations on these coils. The correct peak is the first one reached when tuning the "slug" in from the extreme out position.

STEP	SET GENERATOR TO:	ADJUST
1	455KC	Top of T3-T2-T1 for maximum output
2	455KC	Bottom of T1 for minimum output

RF ALIGNMENT

Equipment required:

1. AM signal generator having frequency range of 550KC to 22MC.
2. Oscilloscope
3. Sweep generator having frequency range of 550KC to 22.6MC. Available frequency deviation between 100KC and 1MC.

Disconnect the telescoping antenna from the receptacle on the rear of Band Switch. When using either the AM signal generator or the sweep generator it is to be connected to the screw beside the receptacle for the telescopic antenna. This is the external antenna connection. Also, when using the sweep generator, the horizontal sweep from the generator is to be fed into the horizontal input connection on the scope.

Before proceeding with the alignment instructions as outlined, the tuning gang should be completely closed and the dial pointer calibrated at the extreme low end of the dial.

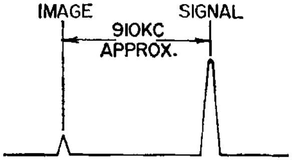

IMAGE RESPONSE SHOULD BE APPROXIMATELY 910KC HIGHER THAN SIGNAL RESPONSE

TABLE 5-C: Factory alignment data for the MAGNAVOX "50 Series" multi-band receiver. A SWEEP GENERATOR is needed for the R.F. alignment.

ployed to select the different antenna, R.F., and oscillator coils used for each band. The I.F. Alignment of these receivers, in most cases, is not too difficult, and may be carried out using the procedures described earlier in this Section. R.F. Alignment, however, may be a quite difficult chore and, in general, should not be undertaken unless adequate test equipment is available, as well as the detailed Align-

TABLE 5-C (Continued)

RF ALIGNMENT CHART

STEP	BAND SELECTOR SETTING	SET TUNING GANG TO	SET AM GENERATOR TO	SET SWEEP GENERATOR TO	ADJUST	REMARKS
1	B	1400KC	1400KC		C28 for Maximum amplitude	Swing generator across band width to check and make sure image frequency is higher than signal frequency.
	1	4.2MC	4.2MC		C25 for maximum amplitude	
	2	11MC	11MC		C22 for maximum amplitude	
	3	22MC	22MC		C18 for maximum amplitude	
2	B	600KC	600KC		L12 for maximum amplitude	
	1	1.8MC	1.8MC		L11 for maximum amplitude	
	2	5MC	5MC		L10 for maximum amplitude	
	3	13MC	13MC		L9 for maximum amplitude	
3	Repeat Steps 1 and 2 until no further adjustment is required.					
4	B	1400KC		1400KC	C15 & C6 for maximum response See Figure	Sweep generator should be set for 1MC sweep width. If not available adjust sweep generator, center frequency to observe image response.
	1	4.2MC		4.2MC	C14 & C5 for maximum response See Figure	
	2	11MC		11MC	C13 & C4 for maximum response See Figure	
	3	22MC		22MC	C11 & C2 for maximum response See Figure	
5	B	600KC		600KC	L8 & L4 for maximum response	
	1	1.8MC		1.8MC	L7 & L3 for maximum response	
	2	5MC		5MC	L6 & L2 for maximum response	
	3	13MC		13MC	L5 & L1 for maximum response	
6	Repeat Steps 1 and 2 until no further adjustment is required.					

ment procedure recommended by the individual set's manufacturer.

The schematic wiring diagram of the Magnavox 50 Series receiver is given in Fig. 5-42. This is a four-band receiver covering (approximately) 540 KC to 22 MC; the I.F. is 455 KC. The set is equipped with a 5″ x 7″ oval PM loudspeaker, and is powered by a single 9-volt battery; current drain is between 12 and 18 MA under zero signal conditions. *PNP* transistors in the common-emitter configuration are used in most stages. In operation, Q1 serves as an R.F. amplifier, Q2 as a mixer, Q3 as a local oscillator, and Q4 and Q5 as the 1st and 2nd I.F. amplifiers, respectively. A conventional diode-type 2nd detector is used, supplying an AVC control bias which is coupled through R18, bypassed by C42, to the base circuits of the R.F. and 1st I.F. amplifiers. The audio signal obtained from the 2nd detector and appearing across *Volume* control R20 is coupled through C44 to a Class A audio stage (Q6) which, in turn, drives the Class B push-pull power amplifier (Q7 and Q8) through interstage transformer T4. The power amplifier is coupled to the loudspeaker through output transformer T5. Receiver Alignment data is given in Tables 5-C and 5-D. Both sweep and standard techniques are outlined.

ALTERNATE ALIGNMENT

ALTERNATE ALIGNMENT

Whenever the specified equipment is available, the sweep generator alignment is recommended, however, there is an alternate method for the alignment of the RF and antenna trimmers and coils using a single generator. While this method is satisfactory for practical purposes, for optimum performance the sweep generator method for alignment should be used.

ALTERNATE METHOD OF ALIGNING RF & ANTENNA TRIMMERS AND COILS

STEP	BAND SWITCH SETTING	TUNING GANG SETTING	SIGNAL GENERATOR SETTING	ADJUST	REMARKS
1	B	1400KC	1400KC	C15-6 for maximum amplitude	When making these adjustments the Generator should be fine-tuned either side of Signal frequency and the trimmers adjusted for maximum output over band width.
	1	4.2MC	4.2MC	C14-5 for maximum amplitude	
	2	11MC	11MC	C13-4 for maximum amplitude	
	3	22MC	22MC	C11-2 for maximum amplitude	
2	B	600KC	600KC	L8-4 for maximum amplitude	When making these adjustments the Generator should be fine-tuned either side of Signal frequency and the trimmers adjusted for maximum output over band width.
	1	1.8MC	1.8MC	L7-3 for maximum amplitude	
	2	5MC	5MC	L6-2 for maximum amplitude	
	3	13MC	13MC	L5-1 for maximum amplitude	

TABLE 5-D: Alternate R.F. alignment steps for the "50 Series" receiver... this technique is used where the Service Technician does not have access to a Sweep Generator.

Covering from 540 KC to 18.2 MC in seven bands, Philco's Model T-9 *"Trans-world"* portable was one of the first fully transistorized Multi-Band receivers to be manufactured. Its schematic diagram is given in Fig. 5-43. Using an I.F. of 455 KC, the T-9 is equipped with a built-in ferrite core (*Magnecore*) antenna for the reception of the AM Broadcast Band (540-1620 KC) and its lowest frequency shortwave band (2.0-4.0 MC), and a 63-inch collapsible whip antenna for

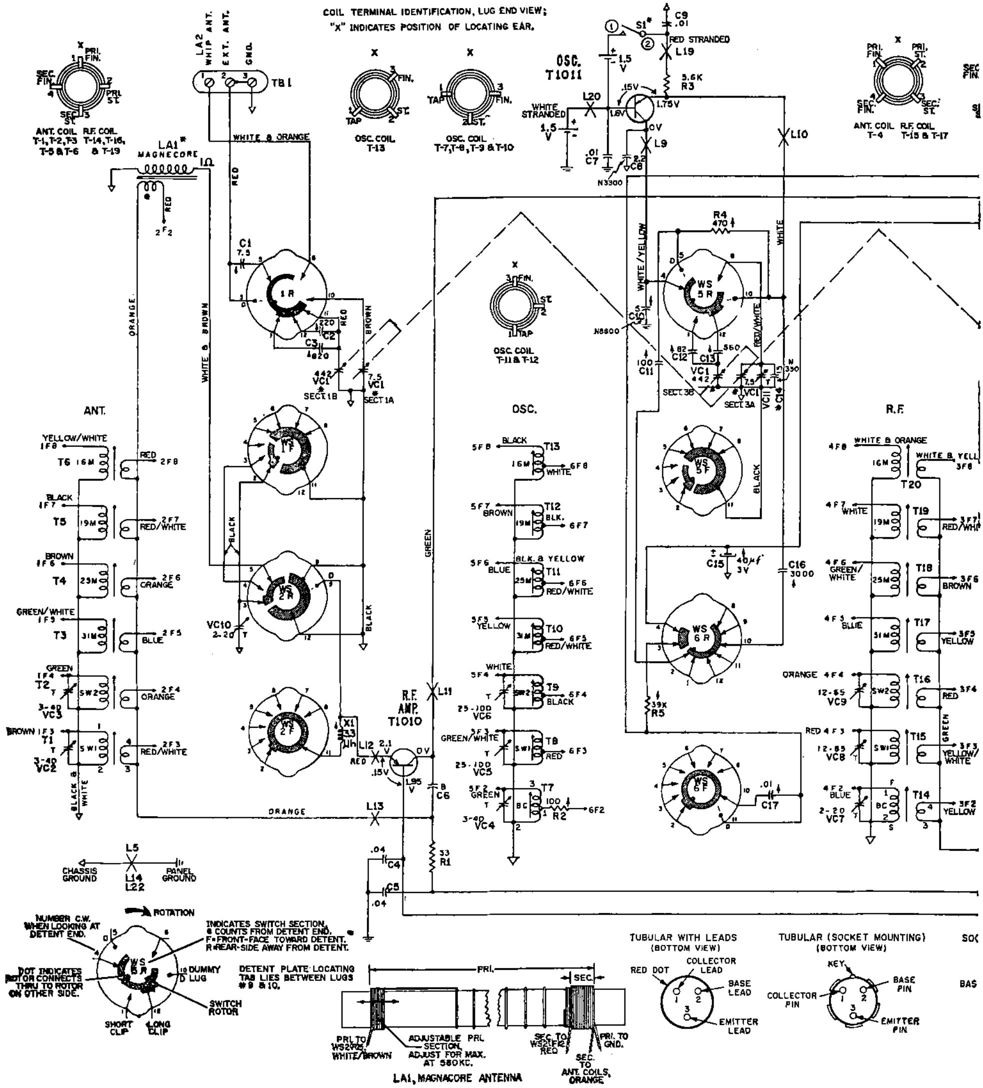

Fig. 5-43: Another multi-band transistorized receiver, the PHILCO Model T-9 "Trans-in seven bands.

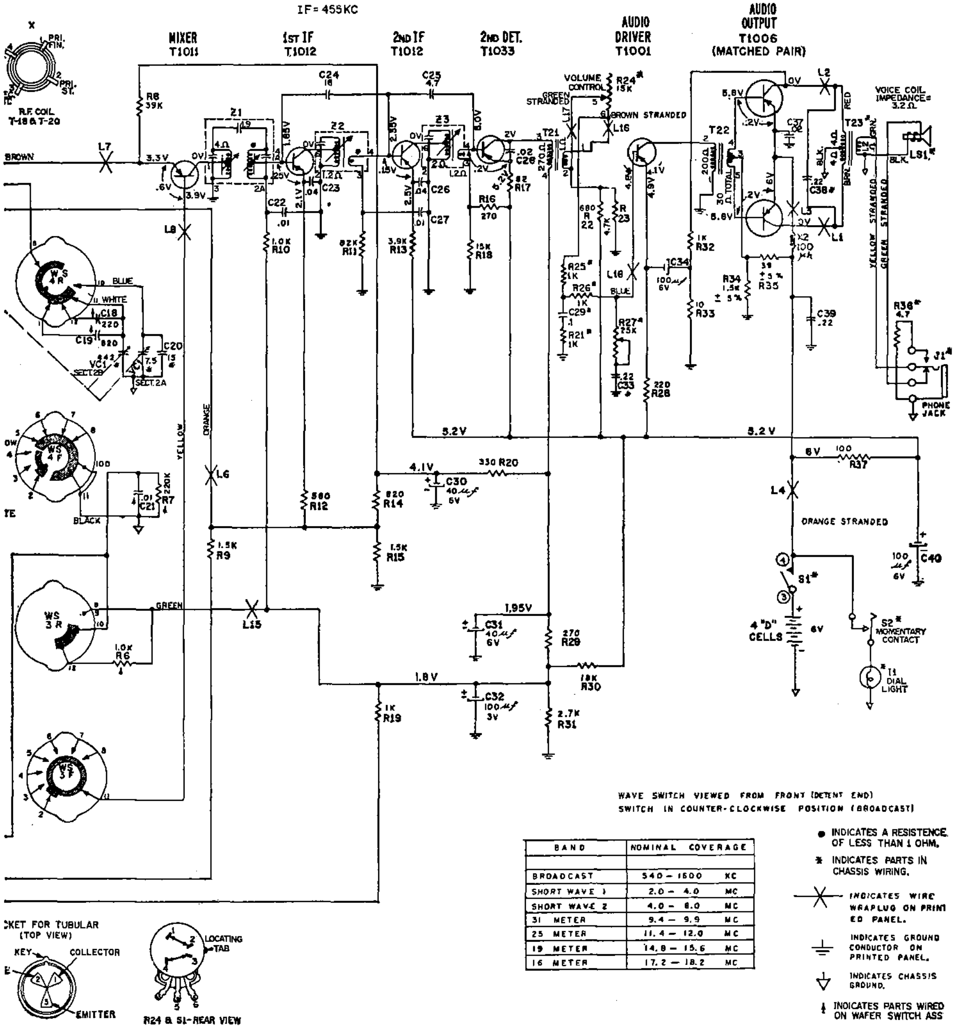

WAVE SWITCH VIEWED FROM FRONT (DETENT END)
SWITCH IN COUNTER-CLOCKWISE POSITION (BROADCAST)

BAND	NOMINAL COVERAGE	
BROADCAST	540 – 1600	KC
SHORT WAVE 1	2.0 – 4.0	MC
SHORT WAVE 2	4.0 – 8.0	MC
31 METER	9.4 – 9.9	MC
25 METER	11.4 – 12.0	MC
19 METER	14.8 – 15.6	MC
16 METER	17.2 – 18.2	MC

● INDICATES A RESISTENCE. OF LESS THAN 1 OHM.

* INDICATES PARTS IN CHASSIS WIRING.

INDICATES WIRE WRAPLUG ON PRINTED PANEL.

INDICATES GROUND CONDUCTOR ON PRINTED PANEL.

INDICATES CHASSIS GROUND.

INDICATES PARTS WIRED ON WAFER SWITCH ASS

World" portable. This is a 9-transistor superhet covering from 540 KC to 18.2 MC

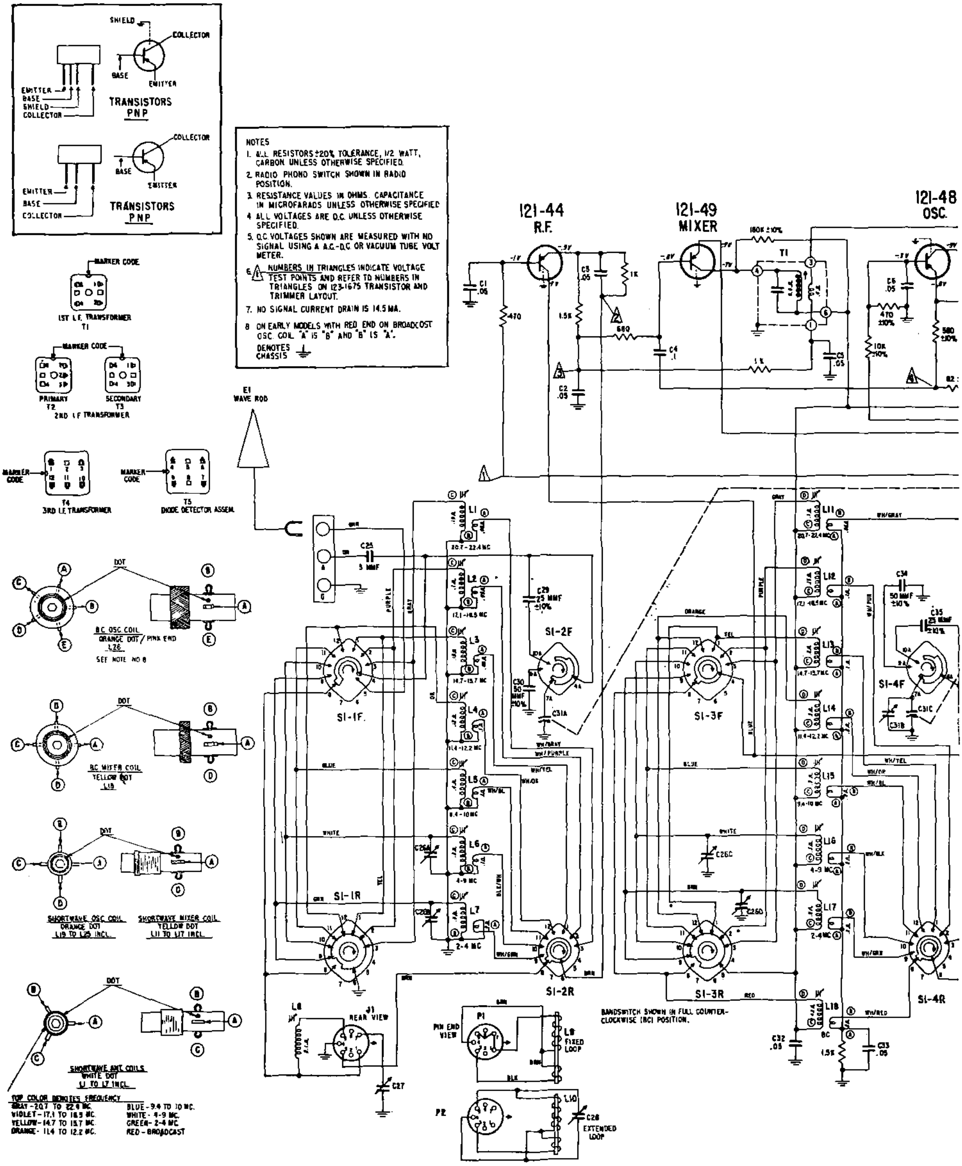
NOTES

1. ALL RESISTORS ±20% TOLERANCE, 1/2 WATT, CARBON UNLESS OTHERWISE SPECIFIED.
2. RADIO PHONO SWITCH SHOWN IN RADIO POSITION.
3. RESISTANCE VALUES IN OHMS. CAPACITANCE IN MICROFARADS UNLESS OTHERWISE SPECIFIED.
4. ALL VOLTAGES ARE D.C. UNLESS OTHERWISE SPECIFIED.
5. D.C. VOLTAGES SHOWN ARE MEASURED WITH NO SIGNAL USING A A.C.-D.C. OR VACUUM TUBE VOLT METER.
6. △ NUMBERS IN TRIANGLES INDICATE VOLTAGE TEST POINTS AND REFER TO NUMBERS IN TRIANGLES ON 123-1675 TRANSISTOR AND TRIMMER LAYOUT.
7. NO SIGNAL CURRENT DRAIN IS 14.5 MA.
8. ON EARLY MODELS WITH RED END ON BROADCAST OSC. COIL "A" IS "B" AND "B" IS "A".

DENOTES CHASSIS ⏚

Fig. 5-44: Schematic wiring diagram of the ZENITH Model "Royal 1000" Transoceanic

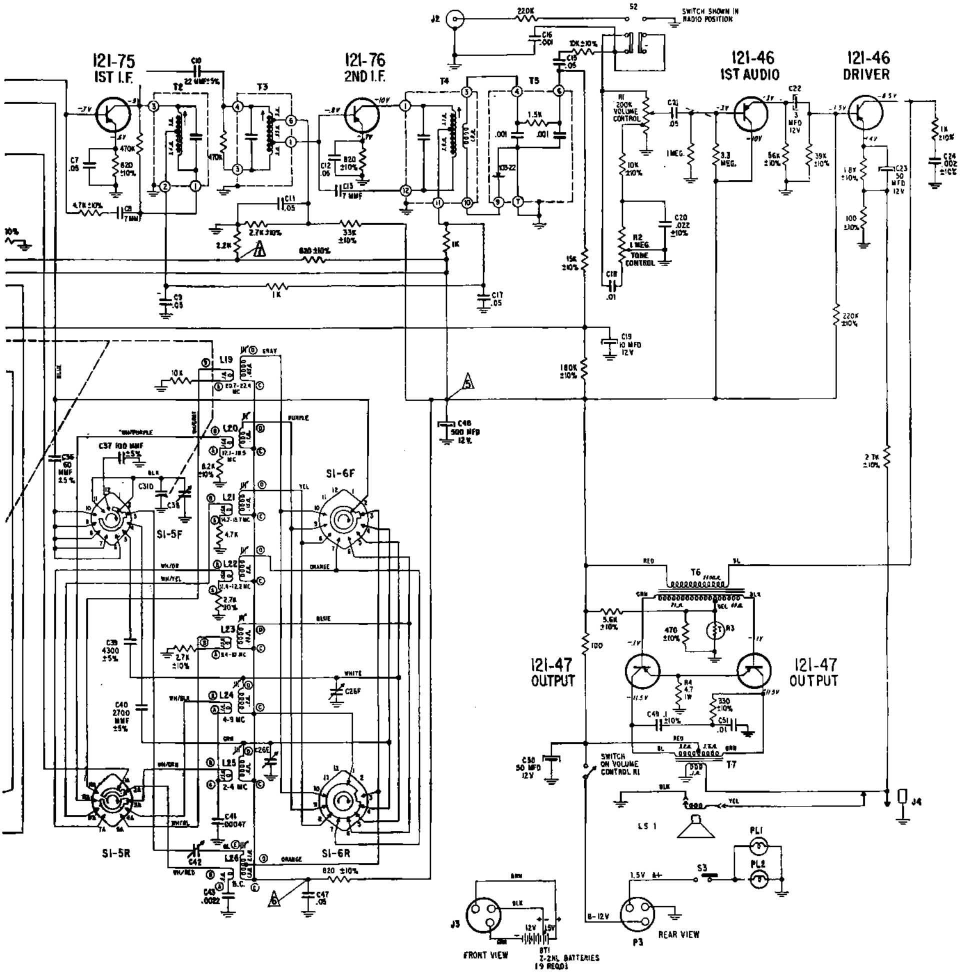

portable receiver, a 9-transistor multi-band radio covering from 540 KC to 22.5 MC.

the reception of higher frequency bands; provision is made for connecting an external antenna. The set uses a 5½″ PM loudspeaker and has an audio power output of 250 milliwatts. Operating power is supplied by six size "D" flashlight cells; four of the cells are connected in series to supply 6.0 volts, with two of the cells used in a separate power supply for the local oscillator to insure stabilized operation.

Referring to the schematic diagram (Fig. 5-43), we see that *PNP* transistors are used throughout. The common-base configuration is used in the R.F. amplifier, mixer, and local oscillator circuits, with the common-emitter configuration employed in all other stages. In operation, the mixer's output signal is coupled through a *double-tuned* I.F. transformer, Z1, to a two-stage neutralized I.F. amplifier. A transistor is used as a combination 2nd detector-first audio amplifier, with its audio output signal coupled through T21 and *Volume* control R24 to a single-ended Class A audio driver. The D.C. component of the detected signal is coupled through R29, bypassed by C32, and through R19, bypassed by C4, to the base of the R.F. amplifier, where it serves as an AVC control bias. AVC bias is also applied to the 1st I.F. stage through R10, bypassed by C22. When the Bandswitch is in the Broadcast-Band, SW1 and SW2 (two lower short-wave bands) positions, AVC is applied to the mixer through voltage divider R6-R7, bypassed by C21; AVC is not used on the mixer stage for reception of the higher frequency short-wave bands. Continuing, the audio driver is coupled to the Class B push-pull output stage through driver transformer T22, and the power amplifier, in turn, is coupled to the loudspeaker through impedance matching transformer T23.

The Alignment Chart for the Model T-9 receiver is given in Table 5-E. To carry through the recommended procedure, first connect an output indicator across the loudspeaker voice coil terminals; this may be an Oscilloscope or standard Output Meter. An AM R.F. Signal Generator is used for all adjustments, and it is set to deliver a modulated output signal; the generator's *Level* or *Attenuator* control should be adjusted to maintain an output (across the voice coil terminals) of less than 0.4 volts. The Radiating Loop mentioned in Step 2 is made up of 6 to 8 turns of insulated wire in a 6-inch diameter coil; it is connected across the Signal Generator's output and placed about one foot from the Magnecore antenna (LA1, Fig 5-43). The *Dummy Antenna* mentioned in Step 6 consists of a 22 MMF. capacitor in series with a 6.8 ohm resistor between the generator's "hot" output lead and terminal #1 of the antenna panel; the "Whip" antenna is disconnected. As a general note, the local oscillator operates on the *high side* of the incoming R.F. signal on the Broadcast and

ALIGNMENT CHART

STEP	SIGNAL GENERATOR		RADIO			ADJUST
	CONNECTION TO RADIO	DIAL SETTING	BAND SWITCH	DIAL SETTING	SPECIAL INSTRUCTIONS	
1	Through a .05 mfd condenser to mixer base, L8. Ground lead to chassis.	455 kc.	BC	Tuning gang fully open.	Adjust, in order given, for max. output.	Z3—3rd I-F Pri. Z2—2nd I-F Pri. Z1—1st I-F Sec. Z1—1st I-F Pri.
2	Radiating loop; see "Signal Generator" in procedure above.	1620 kc.	BC	1620 kc.	Adjust for max. output. Oscillator is tuned to high side	VC4—BC osc.
3	Same as step 2.	580 kc.	BC	580 kc.	Adjust for max. output. This is the osc. tracking adjustment. repeat steps 2 and 3 until no further adjustment is necessary.	T7—BC osc. core
4	Same as step 2.	1500 kc.	BC	1500 kc.	Adjust for max. output.	VC7—BC R-F VC10—BC Ant.
5	Same as step 2.	580 kc.	BC	580 kc.	Adjust for max. output. Adjust LA1 primary by sliding on magnecore. Coil is held in place by wax. Gently heat to move. Repeat steps 4 and 5 until no further improvement is noted.	T14—BC R-F core LA1—BC magne. Pri.
6	Through a dummy ant. *Important*—See "Signal Generator" in procedure above.	4 mc.	SW1	4 mc.	Adjust for max. output. Oscillator is tuned to high side	VC5—SW1 osc.
7	Same as step 6.	2 mc.	SW1	2 mc.	Adjust for max. output. This is the osc. tracking adjustment. Repeat steps 6 and 7 until no further adjustment is necessary.	T8—SW1 osc. core
8	Same as step 6.	4 mc.	SW1	4 mc.	Adjust for max. output.	VC8—SW1 R-F VC2—SW1 Ant.
9	Same as step 6.	2 mc.	SW1	2 mc.	Adjust for max. output. Repeat steps 8 and 9 until no further adjustment is necessary.	T15—SW1 R-F core T1—SW1 Ant. core
10	Same as step 6.	8 mc.	SW2	8 mc.	Adjust for max. output. Oscillator is tuned to high side	VC6—SW2 osc.
11	Same as step 6.	4 mc.	SW2	4 mc.	Adjust for max. output. This is the osc. tracking adjustment. Repeat steps 10 and 11 until no further adjustment is necessary.	T9—SW2 osc. core
12	Same as step 6.	8 mc.	SW2	8 mc.	Adjust for max. output.	VC9—SW2 R-F VC3—SW2 Ant.
13	Same as step 6.	4 mc.	SW2	4 mc.	Adjust for max. output. Repeat steps 12 and 13 until no further adjustment is necessary.	T16—SW2 R-F core T2—SW2 Ant. core
14	Same as step 6.	18.2 mc.	16 meter	18.2 mc.	Adjust for max. output. Osc. is tuned to low side	VC11—Spread osc.
15	Same as step 6.	17.2 mc.	16 meter	17.2 mc.	Adjust for max. output.	T13—16M osc. core
16	Same as step 6.		16 meter		Repeat steps 14 and 15 until no further adjustment is necessary.	VC11 T13
17	Same as step 6.	17.7 mc.	16 meter	17.7 mc.	Adjust for max. output.	T20—16M R-F core T6—16M Ant. core
18	Same as step 6.	15.2 mc.	19 meter	15.2 mc.	Adjust for max. output.	T12—19M osc. core T19—19M R-F core T5 —19M Ant. core
19	Same as step 6.	11.7 mc.	25 meter	11.7 mc.	Adjust for max. output.	T11—25M osc. core T18—25M R-F core T4—25M Ant. core
20	Same as step 6.	9.7 mc.	31 meter	9.7 mc.	Adjust for max. output.	T10—31M osc. core T17—31M R-F core T3—31M Ant. core

TABLE 5-E: Factory alignment data for the T-9 receiver.

two lower short-wave bands; on higher frequency bands, the oscillator's frequency is on the *low side* of the incoming signal.

Manufactured by Zenith, the Royal 1000 *"Trans-Oceanic"* is another popular Multi-Band receiver; its schematic wiring diagram is given in Fig. 5-44. This set is an 8-band receiver covering from 540 KC to 22.5 MC; a 455 KC I.F. is used. The Royal 1000 is equipped with both fixed and detachable ferrite core loop antenna coils (*Wavemagnets*) for Broadcast-Band reception, and with an extendable "whip" antenna, concealed in its carrying handle, for short-wave pick-up. Rated undistorted power output is 500 milliwatts, delivered to a 4″ PM loudspeaker. D.C. operating power is furnished by eight standard flashlight cells assembled in a separate battery compartment and connected in series to supply 12.0 volts, with one additional cell used to operate the dial lamps; current drain under "no signal" conditions is slightly under 15.0 MA, giving an average useful battery life of 300 hours. A Phono jack is provided for connecting an external record player to the receiver's audio section.

An examination of the schematic, Fig. 5-44, reveals that *PNP* transistors are used in all stages. The common-base configuration is used in the R.F. amplifier, mixer and local oscillator stages; the common-collector arrangement is used in the 1st audio stage; finally, the familiar common-emitter configuration is used in all other stages. A unique capacity-coupled (through C10) two-section tuned filter, T2-T3, is used between the 1st and 2nd I.F. amplifiers in place of the more conventional two-winding I.F. transformer. T3 is tapped to provide an impedance match to the 2nd I.F. stage. Both I.F. stages are neutralized . . . the 1st through C8 and a 4.7K resistor, the 2nd through C13. A diode-type 2nd detector is used, with its audio output signal coupled through C15 and a 10K isolating resistor to the Radio-Phono switch S2 and, from here, to *Volume* control R1 (and *Tone* control R2). The D.C. component of the detected signal is coupled back through a 15K resistor, bypassed by C19, and through a 470 ohm resistor, bypassed by C1, to serve as an AVC control bias on the base of the R.F. amplifier. AVC control is also applied to the mixer and 1st I.F. amplifier stages; this is accomplished by obtaining a D.C. signal from the R.F. amplifier's emitter electrode and applying it to the mixer's base (through a 1.5K resistor, bypassed by C2, and a 680 ohm resistor, bypassed by C4) and to the 1st I.F. stage's base (through a 1K resistor, bypassed by C5, and T1's secondary). The D.C. voltage appearing on the R.F. stage's emitter varies, of course, in accordance with the AVC bias applied to its base electrode from the 2nd detector.

Returning to the audio section, a common-collector configuration is used in the 1st audio amplifier stage. This circuit arrangement has a high input impedance (see Section 10), thus permitting the use of a high resistance Volume control (R1) and making the use of a standard record player (having a high impedance crystal or ceramic cartridge) practical; a record player, when used, is connected to jack J2, with S2 thrown to the *Phono* position. Continuing, the audio signal apearing across R1 is coupled through C21 to the 1st audio amplifier, with its output signal, appearing across a 56K emitter load resistor, coupled through C22 to the Class A audio driver. The audio driver, in turn, is coupled to the Class B push-pull power amplifier through interstage transformer T6. Output stage bias is determined, in part, by thermistor R3, which compensates for differences in ambient temperature conditions. The output stage is coupled to, and drives, the PM loudspeaker through impedance matching transformer T7.

The Royal 1000 may be aligned using a standard AM R.F. Signal Generator, and an Output Meter, A.C. Voltmeter, or Oscilloscope as an output indicator. Basic Alignment data is given in Table 5-F.

ALIGNMENT PROCEDURE

OPER.	CONNECT GEN. TO DUMMY ANTENNA	INPUT SIG. FREQUENCY	BAND	SET DIAL AT	TRIMMERS	PURPOSE
1	One turn loop coupled loosely to Broadcast Wavemagnet	455 Kc	BC	1600 Kc	T1, T2, T3, T4	Align I.F.
* 2	One turn loop coupled loosely to Broadcast Wavemagnet	600 Kc	BC	600 Kc	Rock gang, Adjust C42	Alignment of BC at 600 Kc
3		1600 Kc	BC	1600 Kc	C38	Set osc. to scale
4	One Turn Loop Coupled Loosely to Broadcast Wavemagnet	REPEAT OPERATIONS 2 & 3				
* 5		600 Kc	BC	600 Kc	Rock, adjust L18	Alignment of B.C. mixer at 600 Kc
6		1400 Kc	BC	1400 Kc	C31B	Alignment B.C. mixer
7		REPEAT OPERATIONS 5 & 6				
8		1400 Kc	BC	1400 Kc	C27	Alignment of B.C. ant.
9	One turn loop coupled loosely to Detachable Wavemagnet	1400 Kc	BC	1400 Kc	C28	Place Detachable Wavemagnet in center of a metal framed window & adj. C28 for max
* 10	3 Feet of Wire Approximately 1 Foot and Parallel from Extended Waverod	2.1 Mc	2-4 Mc	2.1 Mc	Rock L25, L17, L7	Alignment of S.W. osc., mixer & antenna
11		3.9 Mc	2-4 Mc	3.9 Mc	C26E, C26D, C26B	Alignment of S.W. osc., mixer & antenna
12		REPEAT OPERATIONS 10 & 11				
* 13		4.25 Mc	4-9 Mc	4.25 Mc	Rock L24, L16, L6	Alignment of Short Wave Oscillator, Mixer and Antenna
14		8.75 Mc	4-9 Mc	8.75 Mc	C26F, C26C, C26A	
15		REPEAT OPERATIONS 13 & 14				
16		9.7 Mc	31 meters	9.7 Mc	L23, L15, L5	
17		11.8 Mc	25 meters	11.8 Mc	L22, L14, L4	
18		15.2 Mc	19 meters	15.2 Mc	L21, L13, L3	
19		17.8 Mc	16 meters	17.8 Mc	L20, L12, L2	
20		21.6 Mc	13 meters	21.6 Mc	L19, L11, L1	

** NOTE: Rock tuning condenser when making alignment under Operations 2, 5, 10, 13.*

TABLE 5-F: Factory alignment data for the ZENITH "Royal 1000."

The adjustment, in each case, is for a peak output reading. As before, use the minimum Signal Generator level needed to obtain a useable output indication, with the receiver's *Volume* control turned to its maximum position.

GENERAL SERVICE NOTES

The practical radio-TV service technician acquires many "tricks of the trade" as he gains experience in his field. These help cut his diagnosis and repair time to a minimum and, frequently, permit him to go directly to the heart of a problem. As we have seen (in Section 1), many "standard" service techniques which have been used for years in testing and repairing tube-operated equipment must be modified considerably when applied to transistorized gear, either to avoid misleading conclusions or to prevent actual physical damage of transistor components. The same situation holds true for accepted "service tricks." The following general notes, however, apply specifically to transistorized receivers . . .

1) **BATTERIES** – In tube-operated receivers, a drop in battery voltage generally results in weak operation and loss of sensitivity; in some cases, the set's local oscillator will "kick out," resulting in a *dead* set. In transistor receivers, on the other hand, *actual D.C. voltages are less important than circuit currents and the battery's internal impedance.* If the battery is well bypassed, some transistor circuits will continue to work with little noticeable change in operation even if battery voltage drops to half its "normal" value. As a battery weakens and its internal resistance increases, any of several service complaints may develop, depending on individual circuit conditions and the effectiveness of bypass and decoupling networks. There may be a drop in sensitivity (gain) and output volume, with some increase in distortion levels. In some receivers, the change in bias currents may make the I.F. neutralization less effective (due to the change in the transistor's operating characteristics), resulting in instability and oscillation (squealing). In other receivers, an increase in battery resistance may result in common-coupling through the power supply and overall oscillation or motorboating. Similar complaints may be caused by a partial open (or loss of capacity) in the large value filter capacitors generally connected across the power supply circuit. *Oscillation caused by a weak battery is seldom encountered in tube-operated receivers.* Finally, *observe battery polarities at all times.*

2) **CAPACITORS** — The low input impedances of transistor amplifiers requires the use of large value electrolytics for audio coupling to prevent signal loss, particularly at medium and low frequencies; similarly, large value electrolytics must be used in filter and bypass applications. These units may become leaky or may lose capacity. In a coupling circuit, leakage may cause distortion, while a loss of capacity will result in a drop in gain and a severe loss of low frequencies. In bypass and filter circuits, leakage will drop operating voltages (and currents), while a loss of capacity may cause feedback and oscillation (or motorboating). In most cases, *low voltage* (1.5 to 15 volt) *capacitors* are used. Care must be taken when checking these units with a conventional Ohmmeter, for the instrument's battery voltage *may be* higher than the units' working voltages, and this, in turn, may cause internal breakdown. The same situation holds true for the voltages applied by some R-C Checkers and Bridges. In general, *the best way to "check" a suspected electrolytic is to try a replacement known to be in good condition* (the familiar Substitution Test) . . . but *be sure to observe D.C. polarities.*

3) **CURRENTS** — As mentioned above, transistor currents are much more important than operating voltages. Hence, some manufacturers will indicate "normal" operating currents in different stages. Where this is done, test measurements may be made by *opening* the circuit and inserting the current meter (Milliammeter or Microammeter) in *series,* observing correct D.C. polarities. The currents required by variable bias stages (AVC or AGC controlled stages, for example) and by Class B amplifiers (used frequently in output stages) *will vary with signal level,* and this must be taken into account when making tests. Before starting tests on a transistorized receiver, it is generally a good idea to make *a check of overall operating current.* Should this be unusually high, it may indicate a leaky or "shorted" transistor or leaky capacitor.

4) **ETCHED CIRCUITS** — A common complaint in transistor receivers assembled on etched circuit boards is "intermittent trouble." Often, this is caused by a poorly soldered joint or by a hair-line crack in the board's copper foil. These defects can often be found by "flexing" the board *slightly* and by careful Visual Inspection. A poor joint should be resoldered. A hairline crack may be "bridged" with solder or a short piece of hook-up wire.

5) **LEAD DRESS** — Wiring and component placement may *be extremely critical* in ultra-compact "personal" portable receivers, particularly in the R.F. and I.F. sections. Poor lead dress may result in detuning, with resulting loss of sensitivity, or, in other cases, in feedback causing squealing and motorboating. In general, don't shift the position of wires and components without checking the possible

effect on circuit performance. If Manufacturer's Service Data is available, check this for notes on "Lead Dress, in the equipment being serviced.

6) **OSCILLATORS** – In tube-operated equipment, oscillators are generally Class C amplifiers; here, grid bias voltage is dependent on the circuit oscillating, and a common check for oscillation is to "measure across the grid resistor for D.C. bias." A "dead" local oscillator in a receiver, of course, will cause a "dead" set. *Transistor local oscillators*, on the other hand, are generally *Class A amplifiers;* here, D.C. currents may remain the same whether or not the stage is oscillating, and a check for "bias" is meaningless. To check a local oscillator, then, use one of the following methods . . . (a) Use a Grid-Dip Meter as an oscillating detector; (b) Try to pick up the oscillator signal on a near-by radio receiver; (c) Check for the presence of an A.C. voltage by using an R.F. VTVM and small (100 MMF) D.C. blocking capacitor; (d) Check for R.F. signals using an R.F. Signal Tracer.

7) **SWITCHES** – A defective "ON-OFF" switch is a relatively rare complaint in tube-operated equipment. In subminiature equipment, on the other hand, the small physical size of these units makes them prone to mechanical failure. *Be sure to check switches for* proper operation.

8) **TRANSFORMERS** – Battery, electrolytic capacitor, and diode D.C. polarities are important in *both* tube and transistor-operated equipment, and must be observed when making tests or installing new parts. In transistor gear, transformer "polarities" (color-coding) may be of equal importance and should be rigorously observed when making replacements. In I.F. and R.F. stages, incorrect transformer (or coil) installation may result in poor neutralization and either detuning (with resulting loss of sensitivity and selectivity) or oscillation (squealing or motorboating). In audio circuits, incorrect transformer installation may reverse feedback circuits . . . from degenerative (negative) to regenerative . . . and this, in turn, may cause oscillation.

9) **TRANSISTORS** – A few tips when handling transistors . . .

(a) Don't solder to sockets with transistors installed.

(b) Do not remove or install transistors with power "ON."

(c) When soldering to transistor leads, use a *heat sink* . . . see Section 10.

(d) When installing transistors in Class B push-pull (output) stages, check to see if the receiver manufacturer specified the use of *matched pairs*. In some circuits, the use of poorly matched transistors will result in loss of gain, low output, and distortion.

(e) When applying signals to transistors (Signal Injection Test), connect a small D.C. blocking capacitor in series with the "hot" generator lead . . . about 0.1 Mfd. in audio circuits, or 0.01 Mfd. in R.F.-I.F. circuits . . . and use *the minimum signal necessary at all times.*

(f) If the equipment uses *Surface-Barrier* transistors, avoid voltage and current transients; bond any line-operated equipment together and to the chassis of the unit being tested, then to circuit ground, *before* turning "ON." Similarly, the shell or tip of line-operated soldering irons should be bonded to ground with shielding braid to eliminate stray A.C. voltages. Generally, it is best to remove the transistors before tests or repair, if practicable.

TROUBLESHOOTING CHARTS

Designed to minimize diagnosis time and to enable you to pinpoint defects in minutes, the Troubleshooting Charts given in Tables 5-G, 5-H, 5-I, 5-J, 5-K, 5-L, 5-M, 5-N may be applied to all types

COMPLAINTS	Dead, doesn't work at all. Weak, lacks pep, poor sensitivity.
TEST TECHNIQUES	1. Quick visual inspection – look for obvious defects. 2. Check battery under load. 3. Apply test signal to audio system. 4. Apply modulated I.F. signal to I.F. amplifiers. 5. Apply modulated R.F. signal to antenna (through coupling loop). 6. Check local oscillator operation. 7. Check individual stage electrode voltages (currents), components. 8. Check transistors.
TEST RESULTS AND DIAGNOSIS	1. Correct obvious defects. 2. If battery low, replace. If normal, go to step 3. 3. If complaint still present, trouble is in audio system. Check loudspeaker, then go to step 7. If normal, go to step 4. 4. If complaint still present, trouble is in I.F. stage(s). Go to step 7. If normal, go to step 5. 5. If complaint still present, defect is in antenna, in R.F. or converter stage, or local oscillator isn't working (in superhets). If normal, set has been repaired. 6. If local oscillator is "dead," try a substitute signal as final check. Set dial to frequency of local station. Apply an unmodulated R.F. signal at frequency equal to station frequency plus the set's I.F. value. 7. Check of stage voltages and components should isolate defective part. Replace. 8. Transistors checked as last step.

TABLE 5-G: GENERAL TROUBLESHOOTING CHART: "DEAD" AND "WEAK COMPLAINTS — Follow the eight-step procedure outlined when you encounter one of the complaints listed at the top of the chart. Most of these steps require only a minute or two . . . some only a few seconds.

of fully transistorized radio receivers, whether 4, 6, 8 or more transistors are used, whether the sets are "personal" portables or table-model receivers, and whether they are designed for single band or Multi-Band reception. The Charts given in Tables 5-G, 5-H, 5-I, 5-J, and 5-K outline Step-by-Step test procedures for various basic complaints. Often, a defect will be isolated in the first two or three steps. Table 5-L indicates typical component defects which may cause various "tuning" troubles; Table 5-M is similar, but applies to "audio" troubles. Finally, Table 5-N is used when troubleshooting the line-operated chargers (power supplies) found in some receivers.

COMPLAINTS	Distortion, sound garbled, "sounds funny," weak and distorted.
TEST TECHNIQUES	1. Quick visual inspection – look for obvious defects. 2. Check battery under load. 3. Apply test Sine-Wave signal to audio system, observe on Oscilloscope, checking each stage. Vary input level. 3a. Apply a substitute audio signal (voice or music), listening to signal output. Vary input level. 4. Apply sine-wave modulated I.F. signal to I.F. amplifiers, check output of detector with Oscilloscope. 4a. Tune in station, listen to output of 2nd detector with Signal Tracer or substitute amplifier. 5. Check individual stage electrode voltages (currents) and components. 6. Check loudspeaker by substitution. 7. Check transistors.
TEST RESULTS AND DIAGNOSIS	1. Correct obvious defects. 2. If battery weak, replace. If normal, go to step 3. 3. If wave-form distorted, trouble is in audio system. Go to step 5, checking audio stages. If normal, go to step 4. 3a. If sound is distorted, trouble is in audio system. Go to step 5. If normal, go to step 4 or 4a. 4. If wave-form distorted, trouble is in I.F. amplifier. Go to step 5, checking I.F. stage(s). If normal, go to step 4a. 5. Check of stage voltages and components should isolate defective part. Watch for leaky coupling or by-pass capacitors or other defective parts which may change bias currents. Replace any defective parts. 6. Loudspeaker may be checked at any time – however, normally checked after step 3 or 3a if these indicate trouble in audio system. 7. Transistors checked as last step unless receiver has been subjected to unusually high temperatures. Watch for unbalance in push-pull stages.

TABLE 5-H: GENERAL TROUBLESHOOTING CHART — "DISTORTION" COMPLAINTS . . . the seven-step procedure outlined should enable you to track down trouble in just a few minutes.

COMPLAINTS	Poor selectivity; tunes only one station over dial; interference from other stations; several stations picked up at one time.
TEST TECHNIQUES	1. Quick visual inspection – make sure tuning knob rotates tuning capacitor or moves slug, and cap. plates don't short. 2. Check battery under load. 3. Apply modulated R.F. signal at I.F. value, listening for signal from loudspeaker. Apply first to input of I.F. stages, then to antenna or R.F. stage, checking I.F. alignment for peak output.* 4. Check operation of local oscillator, using R.F. Signal Tracer, Grid Dip Meter, or R.F. VTVM. 5. Check osc. stage voltages (currents) and components. 6. Check overall alignment. 7. Check transistors.
TEST RESULTS AND DIAGNOSIS	1. Correct obvious defects. If complaint persists, go to step 2. 2. If battery weak, replace. Otherwise, go to step 3. 3. If normal output obtained from I.F., check R.F. and antenna input. If normal output obtained here, local oscillator is probably defective. Go to step 4. 4. If local oscillator is working on correct frequency (dial station frequency plus I.F. value), defect is in R.F. or antenna circuit – check these, watching for open antenna or R.F. coil. 5. Correct defects found in oscillator circuit and repeat test step 4, then go to step 6. 6. Align set, following manufacturer's instructions or basic technique outlined in Section 1. 7. Check transistors as last step.
*NOTE: In T.R.F. sets (which do not employ a local oscillator) conduct step 3 with a modulated R.F. signal at station frequency, omitting steps 4 and 5.	

TABLE 5-1: GENERAL TROUBLESHOOTING CHART — "TUNING" COMPLAINTS — defects which affect the ability of the receiver to select individual stations occur in the R.F. and I.F. sections.

COMPLAINTS	Noise interference, hum, oscillation, motorboating, squealing.
TEST TECHNIQUES	1. Quick visual inspection – watch for defective shielding, broken capacitor leads. 2. Check battery under load. 3. Tune in station if possible. Then, using 20-50 Mfd. capacitor, check filter and by-pass electrolytic capacitors by bridging across their terminals.* 4. Repeat step 3, using a 0.1 Mfd. ceramic capacitor, but checking ceramic and paper by-pass units. 5. Using large capacitor (as in step 3), momentarily short out input of audio system. 6. Using large ceramic (as in step 4), momentarily short out input of I.F. stage(s), then R.F. (or converter) stage(s). 7. Check receiver alignment. 8. Check individual stage voltages (currents) and parts. 9. Check transistors.
TEST RESULTS AND DIAGNOSIS	1. Correct obvious defects. See if lead dress has been changed. 2. If battery weak, replace. Try shunting with 1,000 Mfd. electrolytic capacitor...if this clears up trouble, replace battery. Otherwise, go to step 3. 3. If trouble is cleared up as a particular capacitor is shunted, replace that unit. Otherwise, go to step 4. 4. If trouble is eliminated as a particular capacitor is shunted, replace that unit. Otherwise, go to step 5. 5. If trouble disappears, defect is either in R.F.-I.F. stages or due to overall oscillation. Go to step 6. If complaint persists, check audio stages (step 8). 6. If trouble disappears, go to step 7, realigning R.F.-I.F. stages. Otherwise, go to step 8. 7. Realign receiver, if difficulty encountered, I.F. transformer(s) or R.F. coils may be defective. Check neutralization (if used) and components here. 8. Compare voltages to those recommended in manufacturer's Service Manual, or to those encountered in receivers using similar circuits. 9. If necessary to replace transistors in R.F. or I.F. circuits, check neutralization and alignment (step 7).

*NOTE: When using electrolytic capacitor as by-pass, be sure to observe D.C. polarity.

TABLE 5-J: GENERAL TROUBLESHOOTING CHART — "NOISE" COMPLAINTS — the presence of an undesired interfering signal (other than that of another station) may be caused by a variety of defects. These steps will enable you to track down the trouble in jig time.

COMPLAINTS	Intermittent, works now and then, works only on cool days; fading, "blasting," shaking makes cut in and out.
TEST TECHNIQUES	1. Quick visual inspection – watch for loose connections, poor socket contacts, broken leads. 2. Check battery under load. 3. If set has complaint ("dead," for example) at time of servicing, troubleshoot as though the complaint were present at all times, referring to appropriate table or check-chart. 4. If complaint is not present at time of servicing, try to introduce. Use long nose plastic pliers or tweezers to move and wriggle components and leads. 5. Turn set on and allow to run until trouble develops, then troubleshoot as in step 3. 6. Tune in station. Connect VTVM to measure AGC voltage or output of second detector. Try shaking set to cause trouble or let run until trouble develops. 7. Place receiver in warm location (not "hot"), then check performance. 8. Place set in refrigerator for a few minutes, then check performance. 9. Check transistors, watching for excessive leakage.
TEST RESULTS AND DIAGNOSIS	1. Correct obvious defects. 2. If battery is weak, replace. Make sure battery contacts are secure. Then go to step 3 or 4. 3. Refer to Tables 5-G through 5-J for specific procedures. 4. If trouble can be introduced as a particular part or lead is moved, you have isolated trouble. Replace any defective parts, resolder loose connections. If unable to introduce trouble, go to step 5. 5. If receiver starts working normally while trouble shooting, go to step 6. 6. When trouble develops, listen to loudspeaker (or earphone) and check AGC voltage. If AGC voltage has changed, defect is in R.F.-I.F. stages. If AGC voltage is normal, but sound has changed, defect is in audio section. 7. Use this technique if complaint involves operation on cool (but not warm) days. Once complaint develops, troubleshoot in normal manner...as in step 3. 8. Use this technique if complaint involves normal operation on warm (but not on cool) days. Again, once complaint develops, troubleshoot in conventional manner...step 3. 9. Always check transistors if receiver is sensitive to temperature variations...or as last step if unable to isolate defect to specific component.

TABLE 5-K: GENERAL TROUBLESHOOTING CHART — "INTERMITTENT" COMPLAINTS — the "intermittent" is one of the toughest sets to service, especially if it is "working normally" when on the bench. However, even the toughest "dog" should yield to the techniques outlined above.

PROBABLE DEFECTS →	COILS			CAPACITORS					GENERAL								
GENERAL TUNING COMPLAINTS ↓	Defective Osc. Coil	Defective Ant. Coil	Defective I. F. Trans.	Short in Tun. Cap.	Defective padder	Defective by-pass C.	Defective coupling C.	Leaky AVC filter	Changed value bias R.	Defective 2nd Detect.	Defective transistor	Defective shielding	Poor lead dress	Misaligned	Poor neutralization	Weak battery	NOTES
Can't tune stations.	●	●	●	*	●	●	●			●	●			●		*	
Tunes only one stat.	*					●	●		●		●			*		*	Check local osc. (superhets)
Dead-high end of band.	*								●		●		●	*		*	" " "
Dead-low end of band	●			*		●	●		●					*		*	" " "
Squealing-oscillation						*						●	*	*	*	*	
Poor selectivity	●	●	●											*			Generally misalignment.
Poor sensitivity		●	●						●	●	●			●		*	
Fading	●				●			●	●		●					*	
"Blasting"								●	●						●		
Doesn't track dial	●		●		●								●	*	●		
Drifts with time	●		●						●		●					*	
Noise with tuning				*													
Works for while only									●	●	●					*	
Interference		●	●			●						●	●	*	●		
Works on some bands	*					●					●		●	*		*	Multi-band receivers.

TABLE 5-L: COMPONENT TROUBLESHOOTING CHART — R.F.-I.F. TROUBLES — this chart lists the defective components which may cause the complaints outlined. As in previous tables, the more common defects are identified with an asterisk (*), less common with a dot.

PROBABLE DEFECTS	CAPACITORS				RESISTORS						TRANSISTORS				GENERAL				
GENERAL COMPLAINT (AUDIO)	Open coupling C.	Leaky coupling C.	Open by-pass C.	Leaky by-pass C.	Bias R.	Emitter R.	High value load	Low value load	Noisy load R.	Noisy control	Noisy	Weak	Leaky	Unbalanced (PP)	Transformer	Battery	Thermistor	Spkr. or 'phones	NOTES
Audio section dead.		●		●									●		●	*		●	
Weak – low gain, output.	●	●		●	●	●	●					●	●			*	●		
General "garbling."		*		●	●	●	●	●				●	●	●		*			
Distortion on peaks.		*		●	●	●	●					●	●	●	●	*	●	●	
Distortion at low volume.					●	●							●	*					
Poor low frequency res.	*		*					●				●			●	*			
Poor high freq. response.							●								●				
Noise as volume changed.										*									
Squealing – motorboating.			*		●	●										*			
Sensitive to temperature.		●		●	●	●						●	*			*	*		
Hiss or other noise.			●						●		*								

TABLE 5-M: COMPONENT TROUBLESHOOTING CHART — AUDIO TROUBLES — Various audio section complaints are listed, together with component defects likely to cause the complaints.

PROBABLE DEFECTS → **POWER SUPPLY (CHARGER) COMPLAINTS** ↓	**Defective line cord.**	**Open transformer.**	**Shorted transformer.**	**Defective rectifier.**	**Open series resistor.**	**Shorted resistor.**	**Defective battery.**	**Poor output socket.**	**NOTES**
No output voltage	●	●	●	*	●			●	
Low output voltage				*			●	*	
Overheating			●	*		*	●		
Excess ripple				*		●			
Rectifier burns out often						●	*		
Battery doesn't charge				●			*		
Blows fuse	●		*			●	●		

TABLE 5-N: POWER SUPPLY TROUBLESHOOTING CHART — This chart may be used as a guide when servicing receivers employing a line-operated power supply or battery charger. See Figs. 5-31, 5-32, 5-33, and 5-40.

Section 6

SERVICING "HYBRID" AUTOMOBILE RADIOS

AT FIRST GLANCE, automobile radio receivers seem like ideal "candidates" for transistorization; and so they are. These radios obtain their basic operating power from a six or twelve volt D.C. source . . . i.e., the car's storage battery-generator system. As we have seen, transistors work quite nicely on D.C. voltages in this range. Most of the transistorized equipment discussed in earlier Sections for example, used battery power supplies furnishing 12 volts or less. Going a step further, the car radio, since it is mounted in a moving vehicle, is subjected to a fair amount of vibration. Transistors, of course, can withstand . . . without damage . . . vibration and shocks far greater than those which vacuum tubes can handle. And the transistor has still another advantage over the vacuum tube; with a theoretically infinite service life if not abused, it is "perfect" for equipment mounted (like most car radios) in difficult-to-reach locations. No wonder, then, that automobile radio manufacturers started considering the use of this semiconductor device as soon as it became a commercial reality.

From the beginning, the car radio designer faced many of the same problems that beset the portable receiver manufacturer desiring to transistorize his sets . . . plus a host of new ones. First, of course, was the early lack of suitable low-cost R.F. transistors. This made "hybrid" designs a *must,* at least for a while; a "hybrid" receiver, as you'll recall, is one in which vacuum tubes are used in the R.F.-I.F. sections, and transistors in the audio output stage. On the surface, it might appear that a hybrid car radio would follow the general design of a hybrid portable, as discussed in Section 4. But such is not the case. These two types of receivers . . . automobile and portable radios . . . although serving the same function, are entirely different breeds of creatures engineeringwise.

In a portable receiver, for example, light weight, small physical size, and low D.C. power requirements are items of paramount importance, but power output is not a critical factor; audio powers of from 50 to a few hundred milliwatts are quite ample for most of these sets, and will drive the miniature and subminiature loudspeakers used to full output. Thus, the small "milliwatt" transistors first manufactured could be used satisfactorily in the power output stages of portable receivers. One of these, serving as a single-ended Class A amplifier, could deliver as high as 50 to 100 milliwatts (0.050 to 0.100 *watts*); a pair, in Class B push-pull, might deliver as much as 90 to 250 milliwatts (0.090 to 0.250 watts). Later, the development of medium power transistors permitted output powers (from a push-pull pair) ranging to a watt or more.

In an automobile radio, on the other hand, weight, size, and power supply requirements are not too important, as long as these are kept within reasonable limits. Relatively speaking, there's "plenty of room" in an automobile. And a car storage battery, recharged periodically by its D.C. generator, can supply tremendous amounts of power when compared to dry batteries, particularly where the latter must be kept small and light physically. Car radio audio power output needs, however, are many times that of portable receivers. As a minimum, an output power of 1,000 milliwatts (1.0 *watt*) is essential, with, in some cases, power level of 2,500 to 10,000 milliwatts (2.5 to 10.0 watts) not too unusual. These relatively high powers are needed for several reasons . . . (a) to overcome car and road noise, even when traveling at high speeds, (b) to provide a "reserve" of power to penetrate, say, to the rear of a large sedan or station wagon, even when filled with passengers, and (c) to meet consumer demands, for the average user had come to expect "plenty of power" from his car radio.

Quite aside from audio power requirements, car receiver manufacturers were faced with another problem. The B battery used in portable receivers, although not inexpensive, is a compact, efficient, reliable, noiseless, and, within its service life, a trouble-free source of the high voltage needed for tube plate and screen supplies. By contrast, the vibrator-transformer-rectifier-filter combination used as a high voltage B supply in conventional auto radios is expensive, bulky, noisy, highly inefficient, and an almost constant source of trouble. Probably a majority of the troubles encountered in tube-operated car radio repair is caused by . . . or the result of . . . defects in the B supply circuit, with defective vibrators representing the "lion's share."

Since there is little advantage in partially transistorizing a car radio set *unless* the bothersome vibrator power supply can be eliminated, the manufacturer was faced with two problems . . . (1) providing sufficient audio output power, and (2) eliminating the vibrator power pack. The solution to the first problem was found with the development and production of multi-watt "hi power" transistors; one of these, alone, can supply an output of from one to five watts, with a pair in push-pull delivering as high as fifteen to twenty-five watts (or more). One solution to the second problem is the use of a transistorized "B" supply; here, a transistor serves as a D.C. powered oscillator, with its output stepped-up by transformer action, then rectified and filtered in conventional fashion. This approach appealed to some manufacturers, and a number of receivers were built using such arrangements.

Chances are the use of transistorized high-voltage power supplies would have spread to all car radio manufacturers had not developments *outside* the semiconductor field eliminated the need for "B" supplies . . . either vibrator or transistor-operated . . . at least as far as Broadcast-Band receivers are concerned. One of these developments took place in the auto manufacturing industry, with the switch-over from "standard" six-volt to more efficient twelve-volt electrical systems in new car designs; the twelve-volt system has become a new "standard," although many older autos and some foreign-built cars still use six-volt systems. The second development came about when tube manufacturers, recognizing the competitive threat posed by the transistor, designed and produced special vacuum tubes which could operate efficiently with *twelve-volt plate and screen supplies.* Since these tubes were equipped with twelve-volt filaments, they could be operated directly from a 12-volt D.C. source.

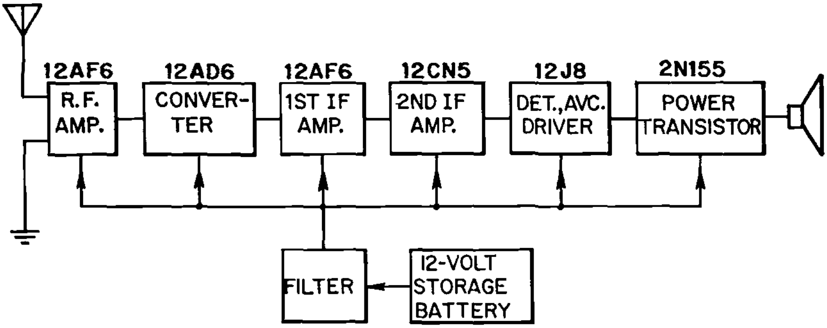

Fig. 6-1: Block diagram of a typical "hybrid" automobile radio receiver. Although tube types and number of stages may differ, the majority of hybrid car radios you'll encounter will use a similar circuit arrangement.

With limited power-handling capabilities, the new low-voltage tubes could be used effectively as R.F. and I.F. amplifiers, as converters, mixers, and local oscillators, and as detectors and low-level audio amplifiers, but were of limited value for use in audio output stages. A combination of developments in different industries, then, led to the evolution of a hybrid automobile receiver using low-voltage vacuum tubes in all but its output stage, with one or more multi-watt power transistors used here. The block diagram of such a receiver is given in Fig. 6-1. Referring to this diagram, appropriate vacuum tube types are used in the R.F. amplifier, converter, I.F. amplifier(s), detector-AVC, and audio driver stages, respectively, with a power transistor used as a power amplifier. Operating power is obtained directly from the car's 12-volt battery-generator system, with a filter provided to eliminate ignition hash, generator noise, and other interference. This basic design, with but a few individual modifications (such as the use of a single I.F. stage, or the elimination of the R.F. amplifier), has become an industry standard. Such receivers are much more efficient than "all-tube" radios having similar performance specifications; for example, a typical tube-operated receiver may require from 6 to 8 amperes, while a comparable hybrid radio would need only 1 to 2 amperes *at the same voltage.*

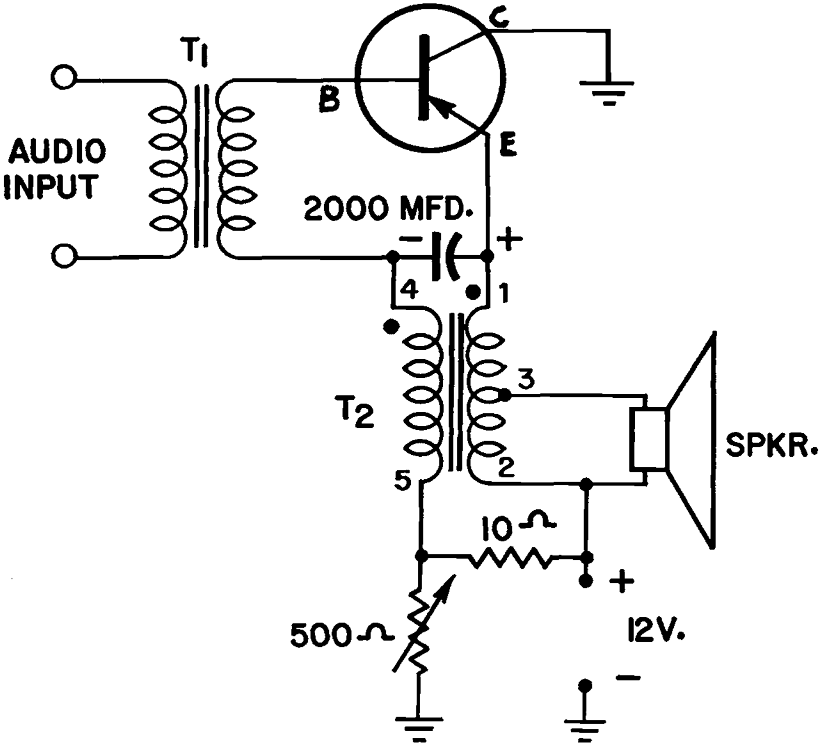

Fig. 6-2: Typical single-ended audio output stage as used in car radios. Note that the collector electrode is connected to circuit ground in this case.

Since reasonably familiar tube circuitry is used in all stages in such receivers except the output amplifier, this stage is of particular interest. Here, any of several circuit arrangements may be used. For example, a single-ended Class A amplifier in the common-emitter configuration will give acceptable results; such a circuit was described in Section 3 (see Fig. 3-2). Where higher powers are needed, Class AB or Class B push-pull amplifiers may be used . . . similar to those employed as output amplifiers in P.A. systems (see Section 3, Fig. 3-6). Occasionally, a single-ended Class A *common-collector* amplifier will be used to improve heat dissipation (more about this later); the schematic wiring diagram of such a stage is given in Fig. 6-2.

Referring to the schematic, a single *PNP* power transistor has its collector electrode connected directly to circuit ground. In operation, interstage transformer T1 matches the moderately high output impedance of the tube-operated driver to the *very low* input impedance (typically, 6 to 12 ohms) of the transistor's base-emitter circuit, assuring an efficient transfer of signal energy. Base bias current is furnished by a voltage divider made up of a 10 ohm fixed resistor and a 500 ohm rheostat, with the latter serving to adjust emitter current to its optimum value for the individual transistor used. A 2,000 Mfd. capacitor isolates the input signal to the base-emitter circuit, permitting the output signal to be developed in the emitter-collector circuit; this technique permits the stage to operate as a *common-collector* amplifier D.C.-wise, but as a *common-emitter* amplifier as far as A.C. signals are concerned, thus achieving the higher gain of the latter circuit configuration. T2 serves as an output transformer, with its primary winding tapped to provide a match between the transistor's 30-ohm output impedance and the loudspeaker's 3-4 ohm voice coil winding (by auto-transformer action). T2's secondary winding introduces a degenerative (inverse) feedback bias to stabilize circuit operation. A typical amplifier of this general type can deliver an output of 3 watts at 10% distortion, with a power gain of 30 db. At 12.0 volts, the transistor's emitter current would be in the neighborhood of 500 MA (or a half-ampere).

As we have seen (in Section 3), the relatively high currents required by power transistors can generate considerable heat in their junctions. This internal heat, if not dissipated rapidly, will result in a drop in the transistor's interelectrode impedances and a further increase in circuit currents . . . and more heating. If not checked, *collector current runaway* (or, as sometimes called, *thermal runaway*) will occur and the transistor will be destroyed. To improve the transistor's heat dissipation characteristics, then, semiconductor manufacturers assemble their high power transistors with the *collector* electrode mounted directly on the component's heavy metal case. Thus, this electrode is connected *electrically* to the case; often, the case serves as the collector's connection terminal, and no separate pin or lead is provided.

In automobile receivers, ambient temperatures may run quite high, aggravating any tendencies towards thermal runaway. To minimize the chance of this happening, car radio manufacturers generally mount their power transistors on large metal radiators or *heat sinks.* These are often made of aluminum and provided with fins to improve their heat dissipation characteristics. A typical heat sink, with power transistor in place, is shown in Fig. 6-3. Depending on the circuit arrangement employed, the transistor may be insulated from its heat sink (electrically) with a small mica washer coated with silicone grease, the entire heat sink assembly may be insulated from the receiver's chassis and circuit ground, or, in some cases, the circuit used (Fig. 6-2, for example) may permit both the heat sink and transistor case to be grounded.

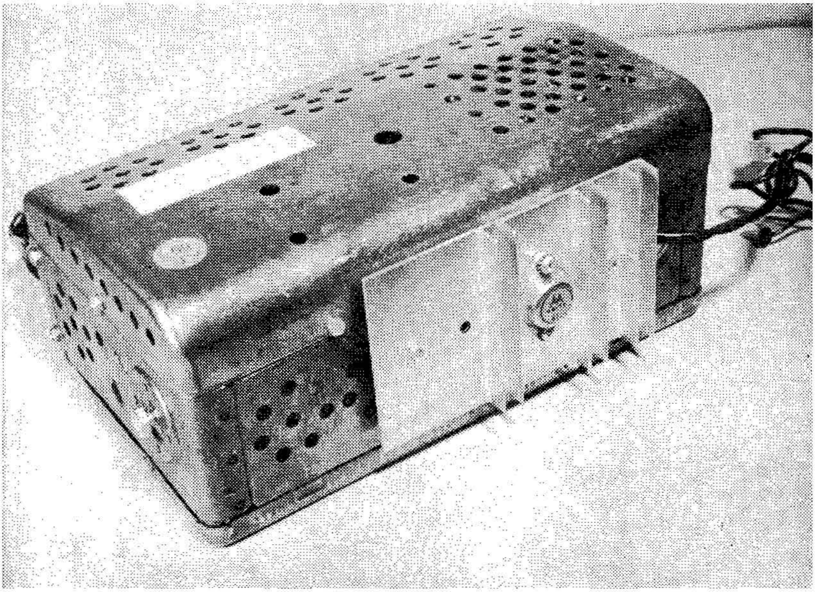

Fig. 6-3: Rear view of a typical hybrid car radio, showing the power transistor mounted on its metal HEAT SINK.

Unlike hybrid portable receivers, which have largely disappeared from the manufacturing scene, hybrid car radios are still a dominant type, and will probably remain so for some time to come. Their maintenance and repair, then, will become an increasingly important source of revenue to the radio service technician. These receivers can be tested using the basic test instruments and techniques discussed in Section 1. An adequate power source for bench checks is quite important. Some manufacturers recommend the use of a storage battery for such work, but a line-operated Power Supply may be used, *provided it has adequate filtering and regulation.* A commercially built instrument designed for this service is shown in Fig. 6-4. Older "Battery Eliminators" designed orginally for servicing tube-operated radios *should not be used* unless provided with additional filtering (see Section 1, Fig. 1-15).

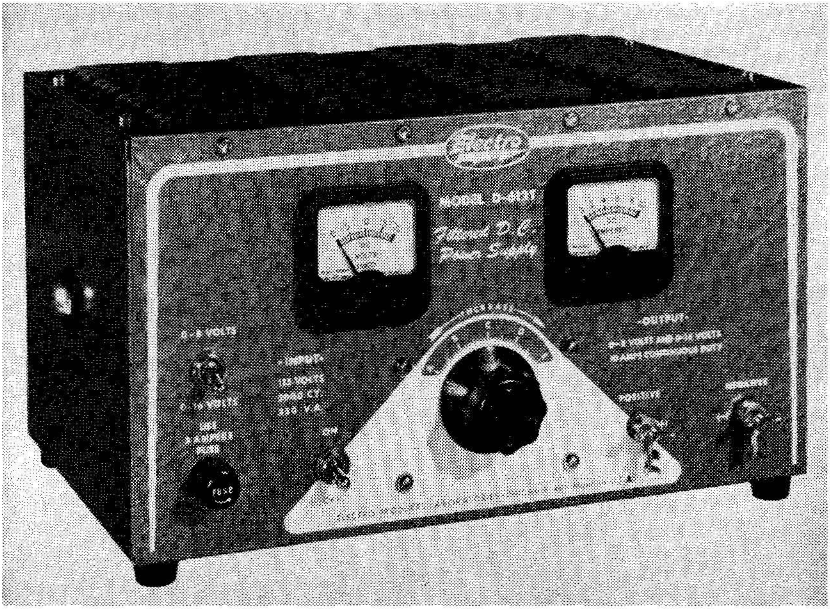

Fig. 6-4: A bench-type A.C. operated D.C. power supply, designed specifically for servicing car radio receivers.

TYPICAL HYBRID RECEIVERS

The loudspeaker, receiver chassis, and other components making up the Bendix Model R84BF car radio are shown in Fig. 6-5. A superhet using four miniature 12-volt tubes and a single power transistor, this set was designed for installation in 1958 Model Ford automobiles (Ford radio Model No. BA-18805-B). The receiver's schematic diagram is given in Fig. 6-6, with top and bottom interior views of the chassis given in Figs. 6-7 and 6-9, respectively. Top of chassis components are diagrammed and identified in Fig. 6-8, with below chassis components and connections to the etched circuit board identified in Fig. 6-10. Etched circuit layout is shown in Fig. 6-11; receiver

Alignment data is given in Table 6-A. Using an I.F. of 262.5 KC, the Model R84BF tunes the AM Broadcast-Band from 540 to 1600 KC. Power requirements are 1.5 amperes at 14.4 volts D.C.

Referring to Fig. 6-6, V1 serves as an R.F. amplifier, with its output coupled through C4 to converter V2. Here, the selected R.F. signal is combined with a signal developed by the local oscillator to form the I.F. signal. L1, shunted by C2 in series with C1, forms the antenna tuned circuit; L2, shunted by C5, is the R.F. tuned circuit; and, finally, L3, shunted by C6 and C8, forms the oscillator's tuned circuit . . . oscillator feedback is provided by L4. An inductive tuning arrangement is used, with the three R.F. coil cores (L1, L2, and L3) ganged together mechanically. The I.F. signal delivered by V2 is coupled to I.F. amplifier V3 through interstage I.F. transformer T1. V3's amplified output signal is coupled through the second I.F. transformer, T2, to the diode section of V4, which serves as the receiver's 2nd detector. The D.C. component of the detected signal is coupled back through R7, bypassed by C12, to serve as an AVC control bias on the R.F. amplifier (V1) and converter (V2) stages. V1's bias is also controlled by variable cathode resistor R23, which serves as the radio's *Sensitivity* control; this is a fixed adjustment made during the set's initial installation.

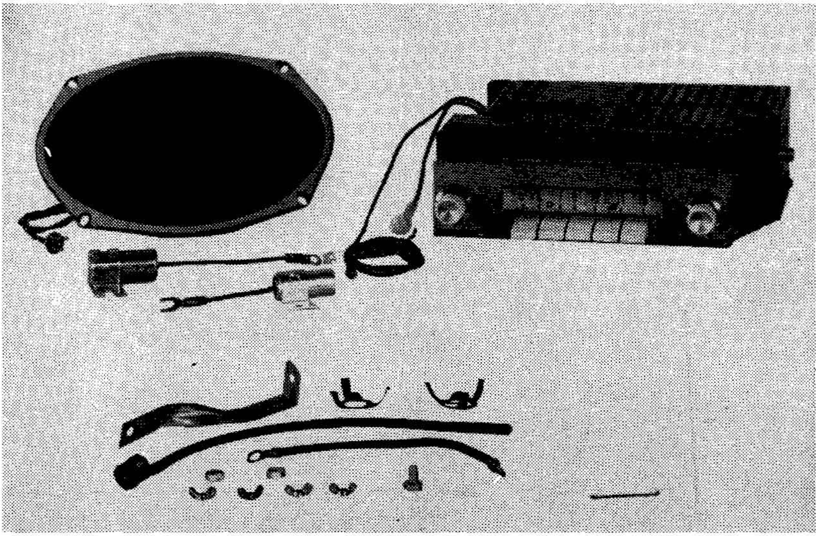

Fig. 6-5: Receiver, loudspeaker and installation components of the BENDIX Model R84BF receiver. This set was used in 1958 FORD automobiles.

Continuing, the detected audio signal is applied through R21 to *Volume* control R10 and, from here, through coupling capacitor

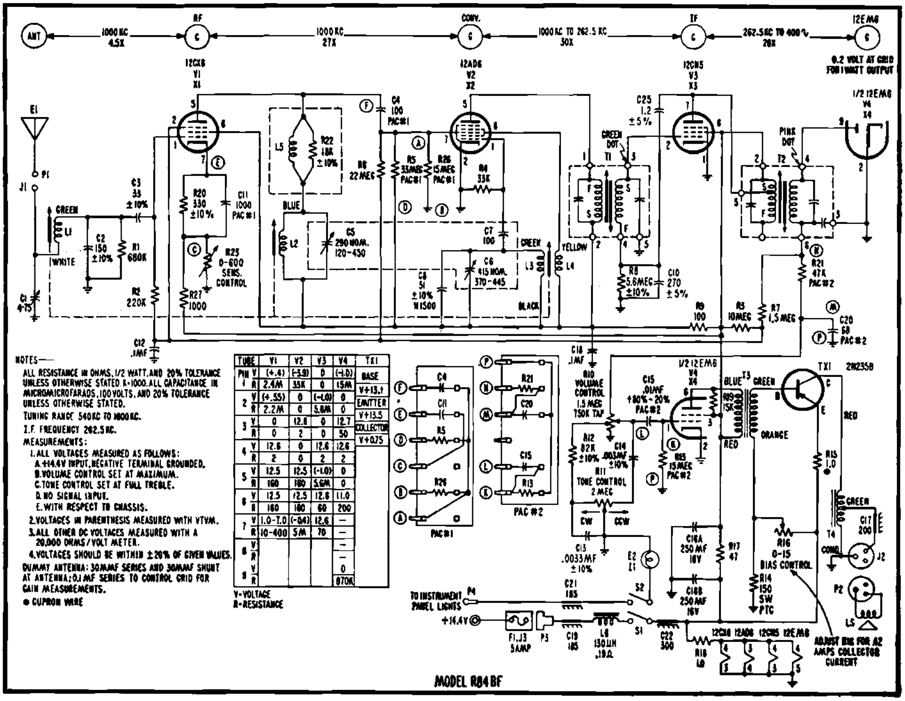

NOTES—

ALL RESISTANCE IN OHMS, 1/2 WATT, AND 20% TOLERANCE UNLESS OTHERWISE STATED. K=1000. ALL CAPACITANCE IN MICROMICROFARADS, 100 VOLTS, AND 20% TOLERANCE UNLESS OTHERWISE STATED.

TUNING RANGE 540KC TO 1600KC.

I.F. FREQUENCY 262.5KC.

MEASUREMENTS:

1. ALL VOLTAGES MEASURED AS FOLLOWS:
   A. +14.4V INPUT, NEGATIVE TERMINAL GROUNDED.
   B. VOLUME CONTROL SET AT MAXIMUM.
   C. TONE CONTROL SET AT FULL TREBLE.
   D. NO SIGNAL INPUT.
   E. WITH RESPECT TO CHASSIS.
2. VOLTAGES IN PARENTHESIS MEASURED WITH VTVM.
3. ALL OTHER DC VOLTAGES MEASURED WITH A 20,000 OHMS/VOLT METER.
4. VOLTAGES SHOULD BE WITHIN ±20% OF GIVEN VALUES.

DUMMY ANTENNA: 30MMF SERIES AND 30MMF SHUNT AT ANTENNA; 0.1MF SERIES TO CONTROL GRID FOR GAIN MEASUREMENTS.

● CUPRON WIRE

TUBE PIN		V1	V2	V3	V4
1	V	(+.4)	(-3.9)	0	(-1.0)
	R	2.4M	33K	0	15M
2	V	(+.55)	0	(-1.0)	0
	R	2.2M	0	5.6M	0
3	V	0	12.6	0	12.7
	R	0	2	0	50
4	V	12.6	0	12.6	12.6
	R	2	0	2	2
5	V	12.5	12.5	(-1.0)	0
	R	160	180	5.6M	0
6	V	12.5	12.5	12.6	11.0
	R	160	180	60	200
7	V	1.0-7.0	(-0.4)	12.6	—
	R	10-400	5M	70	—
8	V				—
	R				—
9	V				0
	R				870K

TX1
BASE
V+13.1
EMITTER
V+13.5
COLLECTOR
V+0.75

V=VOLTAGE
R=RESISTANCE

Fig. 6-6: Schematic wiring diagram of the BENDIX Model R84BF radio receiver.

C15 to the audio driver stage, the tetrode section of V4. C14 and R11 form a simple *Tone* control network; as R11's value is reduced, C14 becomes more and more effective as a high-frequency bypass, reducing the set's treble response. The audio signal is amplified by V4 and applied through interstage matching transformer T3 to the base-emitter circuit of the audio output stage, power transistor TX1. As we have seen, T3 matches the audio driver's high output impedance to the transistor's low input impedance. TX1 is a *PNP* unit operated as a single-ended Class A amplifier in the common-emitter configuration. Base bias current is supplied through a voltage divider network made up of *Bias Control* R16 and fixed resistor R14; an unbypassed temperature sensitive resistor in series with the emitter electrode (R15) serves to provide circuit stabilization. The power amplifier, TX1, is coupled to the oval PM loudspeaker through autotransformer T4; power output is approximately 2.5 watts. Spark-plates

C19, C21 and C22, together with line choke L6 form a noise filter in the receiver's power supply circuit; additional filtering is provided by C16B, R17, and C16A.

Designed for installation in all 1957 Chevrolet cars, the Model 987575 radio, manufactured by Delco Radio, uses five 12-volt miniature tubes and a *PNP* power transistor. The set's schematic wiring diagram is given in Fig. 6-12, with top and bottom chassis views diagrammed in Figs. 6-13(a) and 6-13(b), respectively; Alignment adjustments are identified in these diagrams (Fig. 6-13), with detailed Alignment data given in Table 6-B. Tuning from 540 to 1600 KC, this receiver uses an I.F. of 262 KC. On a 12.0 volt supply, the set draws a current of approximately 2.1 amperes under normal operating conditions.

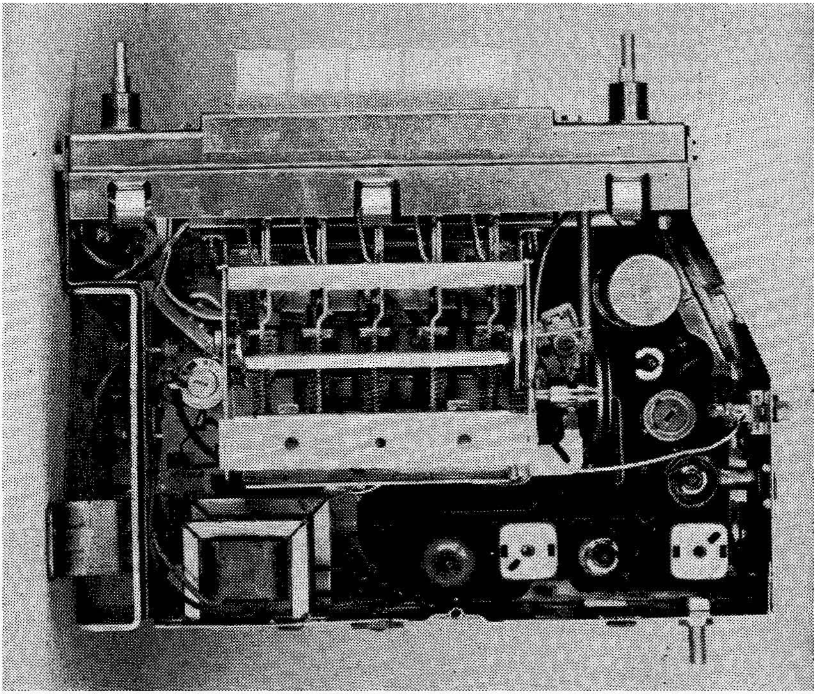

Fig. 6-7: Interior top of chassis view of the BENDIX Model R84BF car radio.

An examination of the Model 987575's schematic diagram reveals that the set is basically similar to the first hybrid car radio described, except for a few modifications in the AVC and audio amplifier circuits. As before, tuning is accomplished by varying the inductance of the set's antenna, R.F., and local oscillator coils, and the first three stages include an R.F. amplifier (12AF6), converter (12AD6), and I.F. amplifier (12AF6). Separate diodes are used for developing the AVC voltage and as the radio's 2nd detector, however. The "AVC diode" is fed with a signal obtained from the 2nd I.F. transformer's primary winding, applied through a small coupling capacitor (part 18). The AVC bias voltage developed across load resistors 44 and 45 is applied through series resistors 42 and 36, bypassed by capacitor 26, to the R.F. amplifier; the portion of the AVC bias appearing across resistor 45, bypassed by capacitor 27, is applied to both the mixer (through resistor 40) and I.F. amplifier stages (through resistor 43, bypassed by capacitor 16).

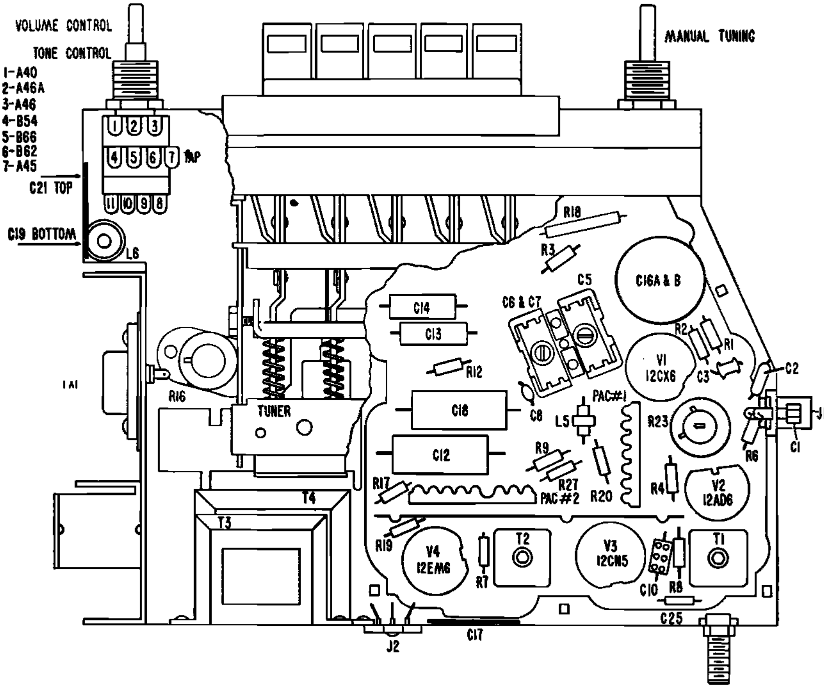

Fig. 6-8: Layout diagram for the Model R84BF receiver. Compare this with the photo given in Fig. 6-7.

Returning to the 2nd I.F. transformer, the signal appearing across its secondary winding is applied to the 2nd detector diode, with the detected audio signal appearing across the 1 megohm *Volume* control (part 64A). From here, the audio signal is applied to the 1st audio amplifier (pentode section of the 12F8) through a 0.022 Mfd. capacitor (part 23), with the amplified output signal appearing across its plate load resistor (part 50) coupled to the audio driver stage (12K5) through a 0.047 Mfd. capacitor (part 28.) Thus, this receiver has one additional stage of audio amplification when compared to the first circuit studied. The remainder of the circuit is conventional . . . the audio driver is transformer-coupled to the power output stage, a *PNP* transistor used as a Class A common-emitter amplifier, with this stage, in turn, coupled to the PM loudspeaker through an impedance-matching auto-transformer. The familiar base bias adjustment (part 66) is present. Although a type 2N173 transistor is specified in Fig. 6-12, some versions of this receiver use a type 2N278.

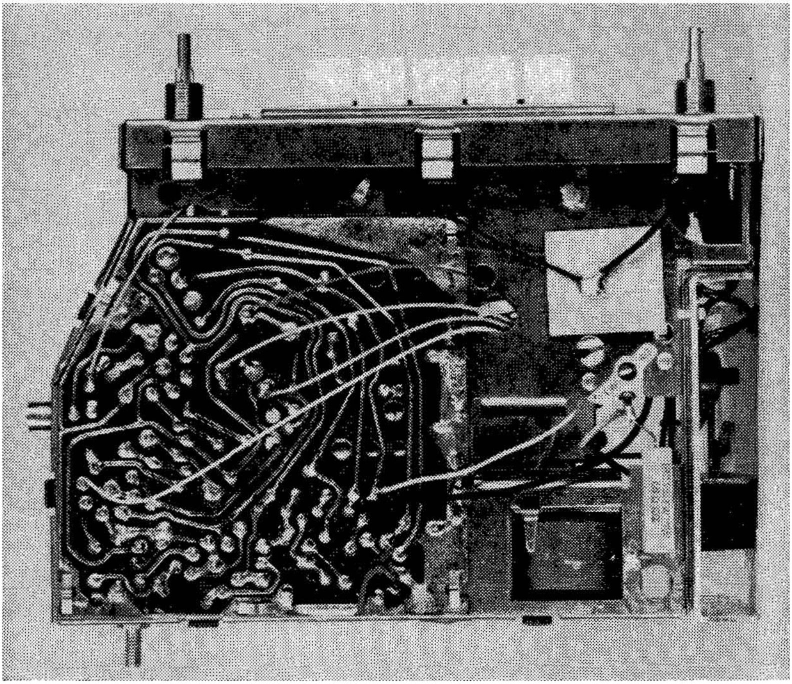

Fig. 6-9: Below chassis photograph of the receiver shown in Fig. 6-5.

Finally, spark-plate and standard bypass capacitors and line chokes are used in the power supply circuit.

Another popular hybrid car radio is shown in Fig. 6-14. This set, Bendix Model R84BC, was designed for installation in 1958 Chrysler automobiles and is identical to the Mopar Model 851. The radio's schematic diagram is given in Fig. 6-15, with top and bottom chassis views diagrammed in Fig. 6-16; etched circuit board layout is shown in Fig. 6-17. Alignment data is given in Table 6-C. Using four 12-volt tubes and a *PNP* power transistor, the Model R84BC has an I.F. of 262.5 KC and tunes from 530 to 1605 KC. It can deliver an audio output of 2.5 watts to its oval loudspeaker, and requires a D.C. power input of 1.5 amperes at 13.2 volts.

Referring to the schematic diagram, we see that most of the tube circuitry is fairly conventional. Tuning is accomplished by varying the inductance of the antenna (L1), R.F. (L2), and local oscillator (L3) coils. V1 serves as an R.F. amplifier, V2 as a converter, and V3 as an I.F. amplifier. Two diodes are used . . . one serving to develop an AVC control bias, the other as the receiver's second detector. The "AVC diode" is fed from T2's primary winding through D.C. blocking capacitor C9, and delivers its output through R9, bypassed by C4, to the converter stage (through R5) and to the R.F. amplifier (through R2); in operation, the diode load is made up of R9, R5, and R16. The 2nd detector receives its I.F. signal from T2's secondary and, in turn, develops its audio output signal across *Volume* control

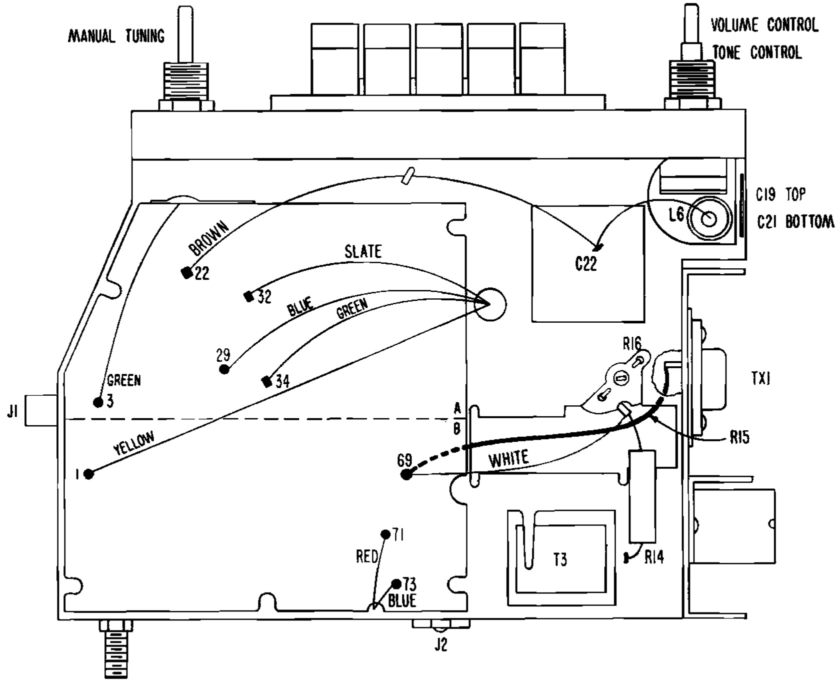

***Fig. 6-10:** Below chassis layout diagram of the Model R84BF receiver. Note that connections to the etched circuit board are identified. Compare this diagram with the photo shown in Fig. 6-9.*

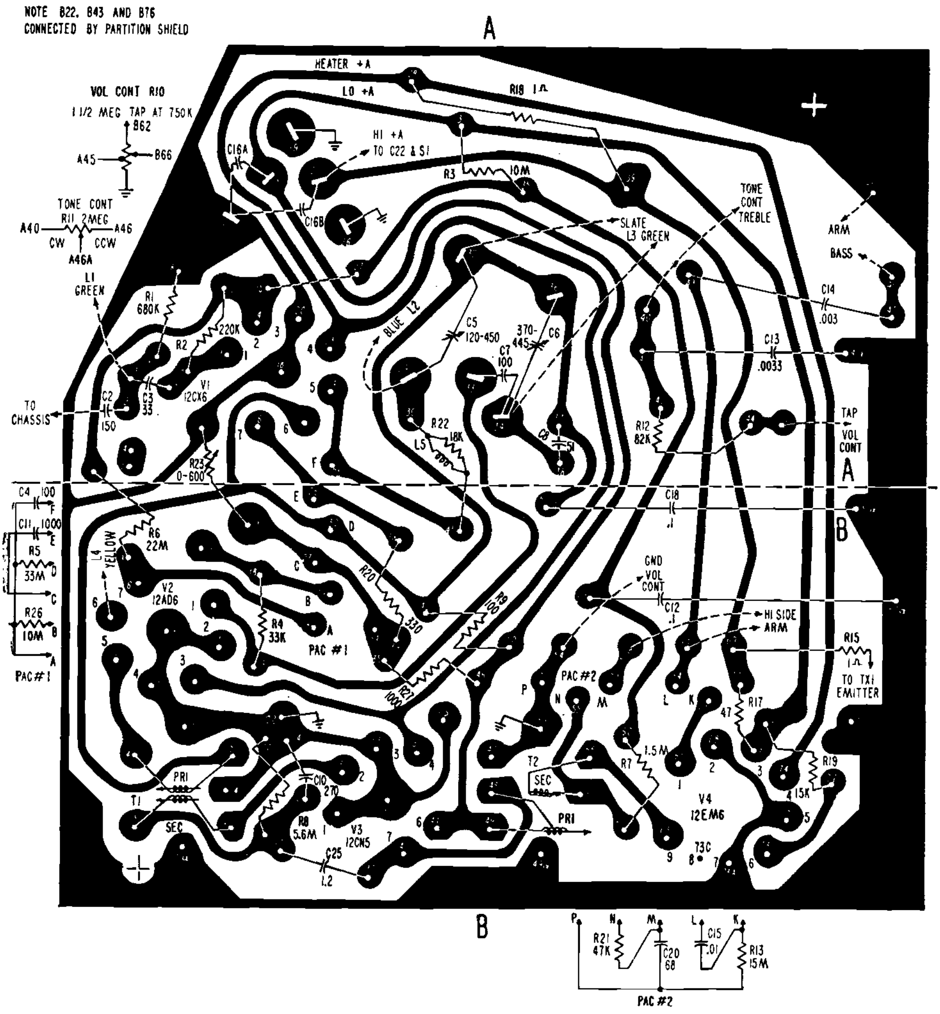

Fig. 6-11: Etched circuit board layout . . . BENDIX Model R84BF receiver.

R13, with R12 and C10 serving as an I.F. bypass filter. A *Tone* control circuit made up of C13 and R15 is connected between R13's center arm and circuit ground, and functions to bypass treble frequencies as R15's value is reduced. C12 couples the audio signal obtained from R13 to the audio driver stage, V4B, where it appears across grid resistor R18.

It is in the audio driver and power output stages that the radio's circuitry differs from that of sets examined earlier. First, we note that the driver transformer, T3, has a tapped primary winding, with V4B's screen grid connected to the tap; this connection permits the screen grid to assist the plate as a driving source, linearizing circuit operation and reducing stage distortion. The amplified signal obtained from driver V4B is applied to the power output stage by T3's step-down secondary winding. Basically, the output stage, transistor TX1, is a single-ended Class A common-emitter amplifier coupled to its loudspeaker load through impedance-matching auto-transformer T4. However, note that T4 is provided with an "extra" tap which is returned to the audio driver's (V4B) cathode. This introduces over-all degenerative feedback which helps stabilize circuit operation and to reduce audio distortion. The transistor amplifier is D.C.-stabilized in two ways . . . by the base bias network, which includes fixed resistor R20, shunted by temperature compensating *thermistor* R27, and bias control R19, and, second, by the use of an unbypassed emitter resistor, R21.

ALIGNMENT

Connect a VTVM across capacitor C12 (B57 on printed circuit board to ground). Set Volume Control to minimum, set Tone Control to normal (full CW). Attenuate signal generator as required to keep VTVM reading between one and two volts.

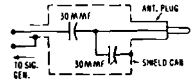

DUMMY ANTENNA

STEP	GENERATOR CONNECTION	GENERATOR FREQUENCY	SET TUNER TO	ADJUST	REMARKS
1	Thru 0.1 mf cond. to pin 7 of conv. V2.	262.5 kc	HI-END STOP	T2 LOWER T2 TOP T1 LOWER T1 TOP	Adjust for maximum VTVM reading.
2	Thru DUMMY ANT, TO ANT, RECEPT.	1605 kc	HI-END STOP	C6 C5 C1	Adjust in order for maximum.
3	With radio in car and antenna fully extended, tune in a weak station near 1600 kc. Readjust antenna trimmer C1 for maximum.				
	IF A TUNING COIL OR CORE HAS BEEN REPLACED, PROCEED AS FOLLOWS:				
4			HI-END STOP	L1 L2 L3	Back cores out of coils to where they just remain in coil form.
5	Thru DUMMY ANT. TO ANT. RECEPT.	1605 kc	HI-END STOP	C6 C5 C1	Adjust in order for maximum.
6	Thru DUMMY ANT. TO ANT. RECEPT.	1180 kc	0.285 inch carriage movement from HI-END STOP.	L3 L2 L1	Adjust cores in order for maximum.
7	REPEAT STEPS 5 AND 6 UNTIL NO FURTHER GAIN IN OUTPUT CAN BE OBTAINED.				

TABLE 6-A: Alignment data for the Model R84BF car radio.

The three hybrid car radio receivers we've examined in the past few pages have shared one important characteristic in common, quite aside from any similarities in basic circuits . . . each of the sets was designed for use in a specific automobile. The Bendix Model R84BF was designed for 1958 Fords, the Delco 987575 for 1957 Chevrolets, and, finally, the Bendix Model R84BC for 1958 Chryslers. In contrast, the Motorola Model 397X is a "universal" receiver, designed to

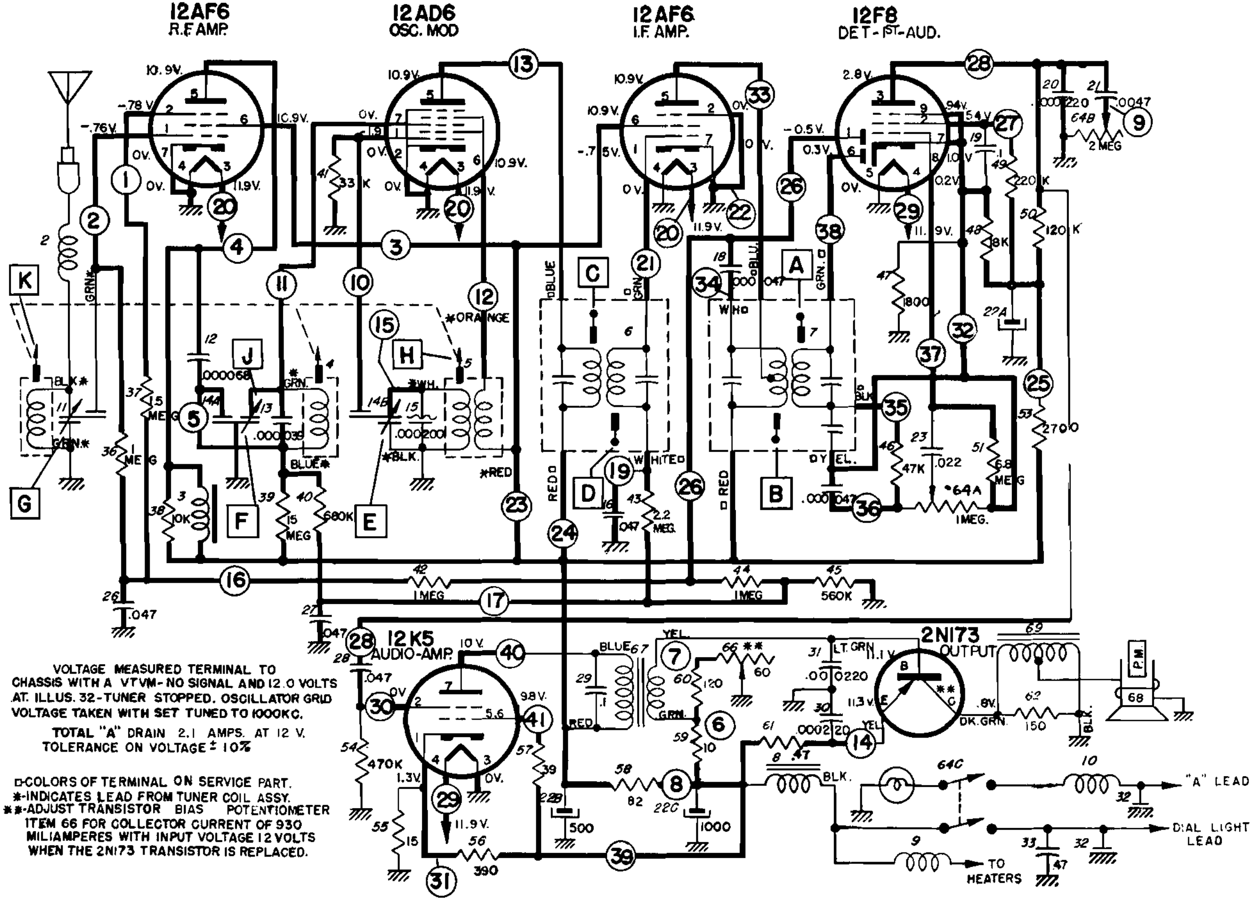

VOLTAGE MEASURED TERMINAL TO CHASSIS WITH A VTVM- NO SIGNAL AND 12.0 VOLTS AT. ILLUS. 32-TUNER STOPPED. OSCILLATOR GRID VOLTAGE TAKEN WITH SET TUNED TO 1000KC.

TOTAL "A" DRAIN 2.1 AMPS. AT 12 V.
TOLERANCE ON VOLTAGE ± 10%

□-COLORS OF TERMINAL ON SERVICE PART.
*-INDICATES LEAD FROM TUNER COIL ASSY.
**-ADJUST TRANSISTOR BIAS POTENTIOMETER ITEM 66 FOR COLLECTOR CURRENT OF 930 MILIAMPERES WITH INPUT VOLTAGE 12 VOLTS WHEN THE 2N173 TRANSISTOR IS REPLACED.

Fig. 6-12: Schematic diagram of the DELCO Model 987575 car radio.

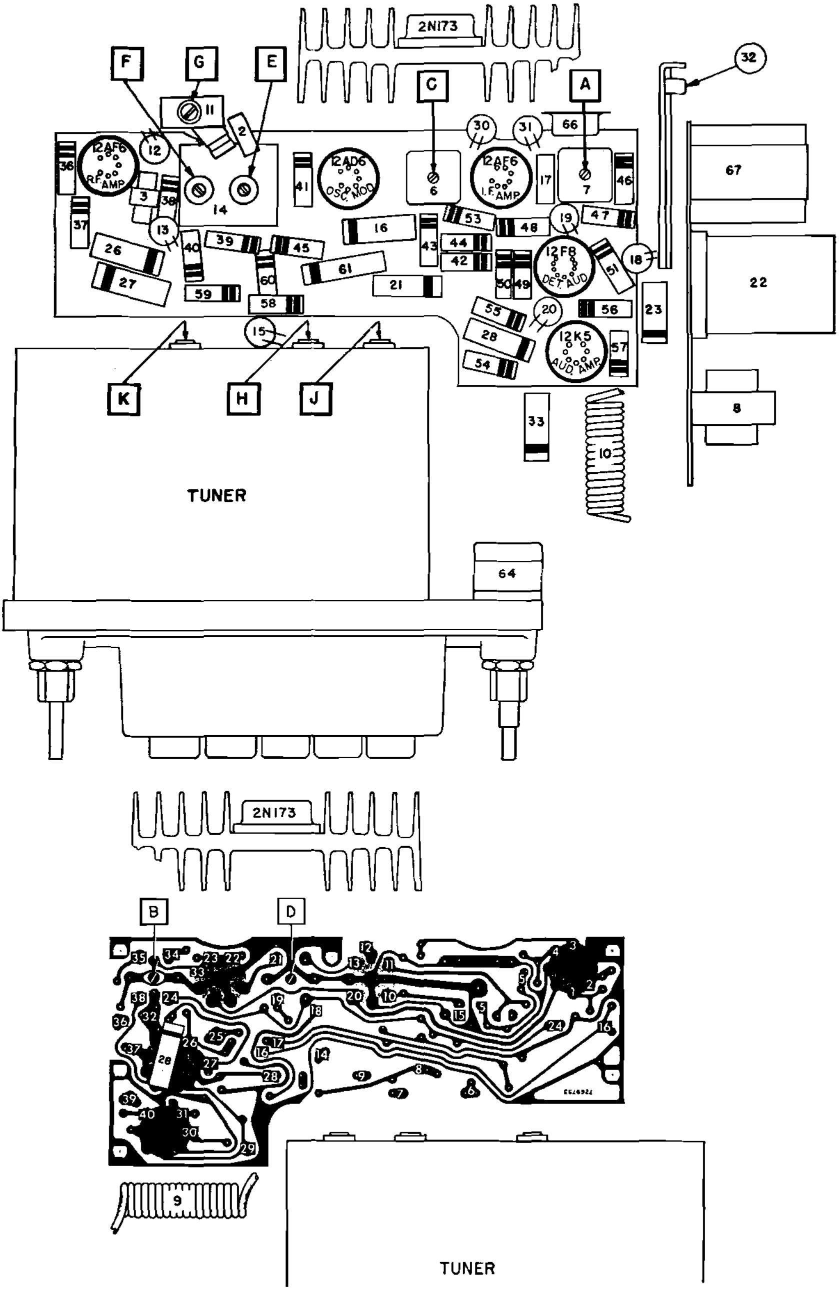

Fig. 6-13: Parts layout diagrams of the Model 987575 receiver. A view from the "tube side" is given at (a), a below chassis view at (b).

ALIGNMENT PROCEDURE

Output Meter Connections	Across Voice Coil
Generator Return	To Receiver Chassis
Dummy Antenna	In Series With Generator
Volume Control Position	Maximum Volume
Tone Control Position	Treble Position
Generator Output	Minimum for Readable Indication

Steps	Series Capacitor or Dummy Antenna	Connect Signal Generator to	Signal Generator Frequency	Tune Receiver to	Adjust in Sequence For Max. Output
1	0.1 Mfd.	12AD6 Grid (Pin #7)	262 KC	High Frequency Stop	A, B, C, D
2	0.000068 Mfd.	Antenna Connector	1615 KC	High Frequency Stop	*E, F, G
3	0.000068 Mfd.	Antenna Connector	640 KC	Signal Generator Signal	J, K
4	0.000068 Mfd.	Antenna Connector	1615 KC	High Frequency Stop	F, G
5	0.000068 Mfd.	Antenna Connector	900 KC	Signal Generator Signal	L**

*Before making this adjustment check mechanical setting of oscillator core "H." The rear of the core should be 1⅝" from the mounting end of the coil form. (This measurement is readily made by inserting a suitable plug in the mounting end of the coil form.) Core adjustment should be made with a non-metallic screw driver.

**L is the pointer adjustment which is on the connecting link, between the pointer assembly and core guide bar (See tuner Dwg.). It should be adjusted so that when looking directly at the dial the pointer is on the 1100 KC mark. This setting is to give the correct relationship between the pointer and the dial when the radio is installed in a car.

With the radio installed and the car antenna plugged in adjust the antenna trimmer "G" for maximum volume with the radio tuned to a weak station between 600 and 1000 KC (see sticker on case.)

TABLE 6-B: Alignment data for the DELCO Model 987575 car radio.

fit *any* automobile having a 12-volt electrical system which employs a negative ground circuit. Equipped with a built-in, rather than separate, 5¼″ PM loudspeaker, the instrument is designed for underdash mounting, but may be mounted in-dash in some cars, if fitted with appropriate trim plate and accessory hardware. The receiver's schematic diagram is given in Fig. 6-18; chassis views, showing component positions and identifying Alignment adjustment locations, are given in Fig. 6-19. Dial cord restringing data, Alignment tool construction, and Dummy Antenna details are given in Figs. 6-20(a), 6-20(b), and 6-20(c), respectively. Covering the AM Broadcast-Band from 540 to 1600 KC, the Model 397X uses an I.F. of 455 KC; detailed Alignment data is given in Table 6-D. Equipped with five

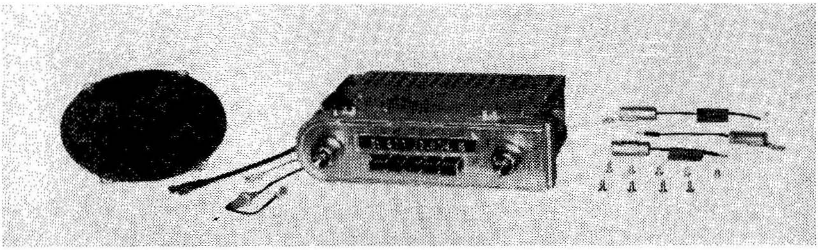

Fig. 6-14: Photograph showing the BENDIX Model R84BC car radio, its loudspeaker, and mounting accessories. This receiver was used in 1958 CHRYSLER automobiles.

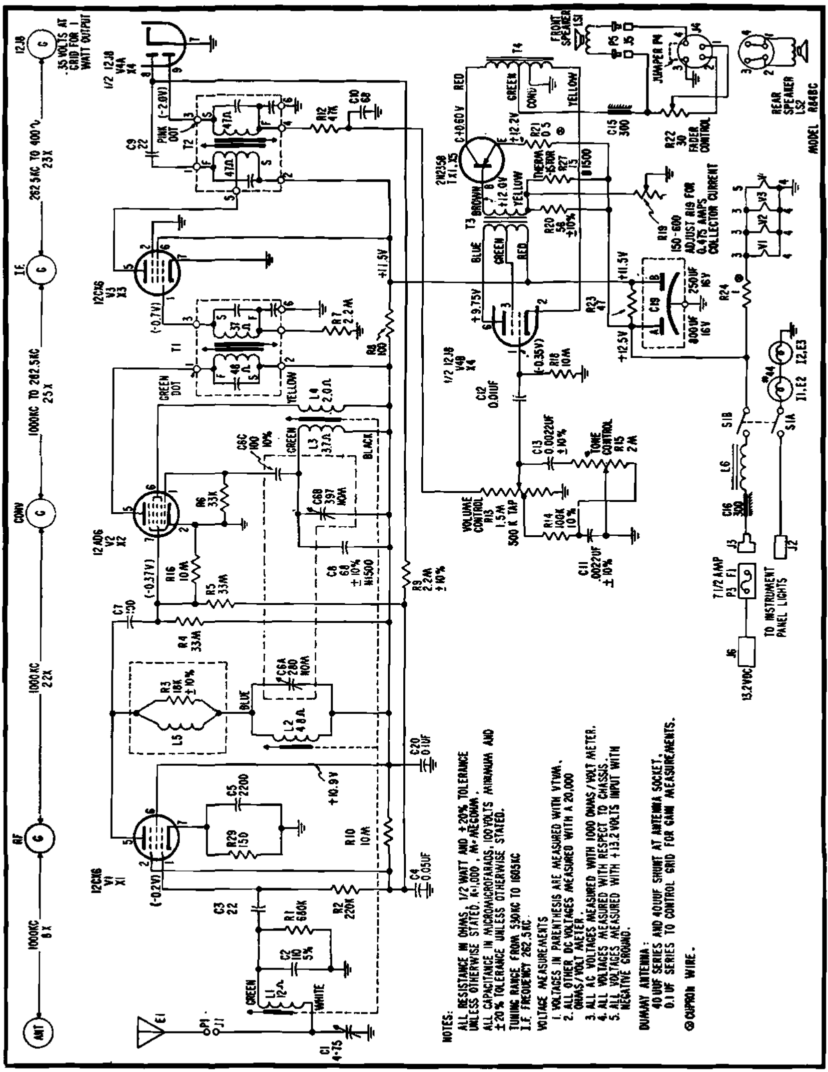

NOTES:

ALL RESISTANCE IN OHMS, 1/2 WATT AND ±20% TOLERANCE UNLESS OTHERWISE STATED. K=1,000, M=MEGOHM.

ALL CAPACITANCE IN MICROMICROFARADS, 100 VOLTS MINIMUM AND ±20% TOLERANCE UNLESS OTHERWISE STATED.

TUNING RANGE FROM 530KC TO 1605KC
I.F. FREQUENCY 262.5KC.

VOLTAGE MEASUREMENTS
1. VOLTAGES IN PARENTHESIS ARE MEASURED WITH VTVM.
2. ALL OTHER DC VOLTAGES MEASURED WITH A 20,000 OHMS/VOLT METER.
3. ALL AC VOLTAGES MEASURED WITH 1000 OHMS/VOLT METER.
4. ALL VOLTAGES MEASURED WITH RESPECT TO CHASSIS.
5. ALL VOLTAGES MEASURED WITH +13.2 VOLTS INPUT WITH NEGATIVE GROUND.

DUMMY ANTENNA:
40 UUF SERIES AND 40 UUF SHUNT AT ANTENNA SOCKET.
0.1 UF SERIES TO CONTROL GRID FOR GAIN MEASUREMENTS.

⊗ CUPRON WIRE.

Fig. 6-15: Schematic wiring diagram for the Model R84BC automobile receiver.

miniature tubes and a single *PNP* power transistor, the set requires approximately 1.5 amperes when powered from a 14 volt D.C. source.

As we can see by referring to the schematic diagram, the Model 397X uses a familiar tuning arrangement. Station tuning is accomplished by varying the inductance of the antenna (L1), R.F. (L2), and local oscillator (L3) coils. R.F. signals picked up by the

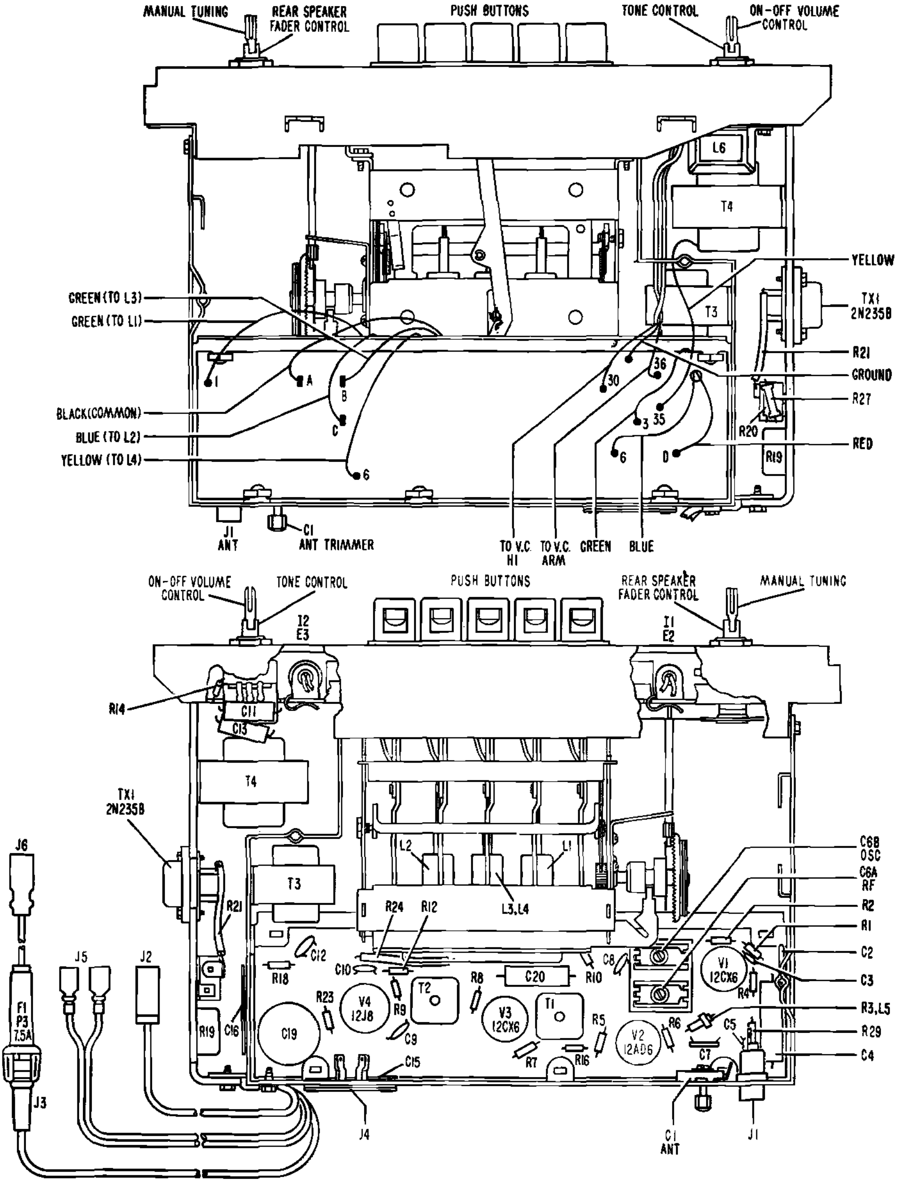

Fig. 6-16: Above and below chassis parts layout diagrams for the receiver shown in Fig. 6-14: Parts numbers correspond to those given in the schematic diagram (Fig. 6-15).

antenna and selected by a tuned circuit made up of L1, C1, and C2, are coupled through C3 to the grid of the R.F. amplifier. A diode here serves as an overload limiter, conducting when excessively strong signals are picked up. The R.F. amplifier's output, appearing across its tuned plate load, L2-C5, is coupled through C6 to the converter stage, where it is combined with the signal produced by the local oscillator to form the 455 KC I.F. signal. From the converter, the I.F. signal is coupled through double-tuned I.F. transformer T1 to the I.F. amplifier and, from here, through the 2nd I.F. transformer T2 to the receiver's 2nd detector, a conventional diode. At the same time, the amplified I.F. signal appearing across T2's primary is coupled through C10 to another diode; here, rectification occurs, with a D.C. voltage developed across diode load R7-R8-R9 proportional to the original strength of the picked up R.F. signal. This voltage serves as an AVC control bias, and is applied through R10, bypassed by C4, and through R3 and R2 to the R.F. amplifier. The AVC voltage appearing at the junction of R7 and R8, bypassed by C9, is applied through T1's secondary to the I.F. amplifier, and through R4 to the converter. Finally, the voltage appearing across R9 is applied through R13 as a small bias on the 1st audio amplifier.

Returning to the 2nd detector, the demodulated audio signal appears across the diode load, *Volume* control R12, and, from here, is coupled to the grid of the 1st audio amplifier through C11. Next, the amplified signal appearing across plate load resistor R15 is coupled through C14 to the audio driver stage. The audio driver, in turn, applies its output signal through interstage matching transformer T3 to the power stage, a *PNP* transistor serving as a single-ended Class A *common-collector* amplifier. Base bias is supplied through bias control R22 in conjunction with resistor R20, shunted by temperature compensating *thermistor* R21. The power amplifier drives the PM loudspeaker through impedance matching transformer T4. An extra winding on T4 is connected in series with the base circuit and serves to introduce a small amount of degenerative feedback to improve stage stability and to reduce harmonic distortion; note the similarity of the circuit used here and the basic circuit discussed earlier in this Section (Fig. 6-2). Additional degenerative feedback is provided across the last two audio stages by resistor R18, connected between T4's secondary and the audio driver's grid. A three-terminal receptacle permits an external (rear seat, for example) loudspeaker to be added to the receiver.

In the power supply circuit, the "hot" *positive* battery lead is connected to the receiver through line fuse E3. Line filtering is provided by spark-plate C16, capacitor C17, and line choke L4. Power is controlled by an SPST "ON-OFF" switch ganged to the set's *Volume* control (R12). Additional filtering and decoupling for the

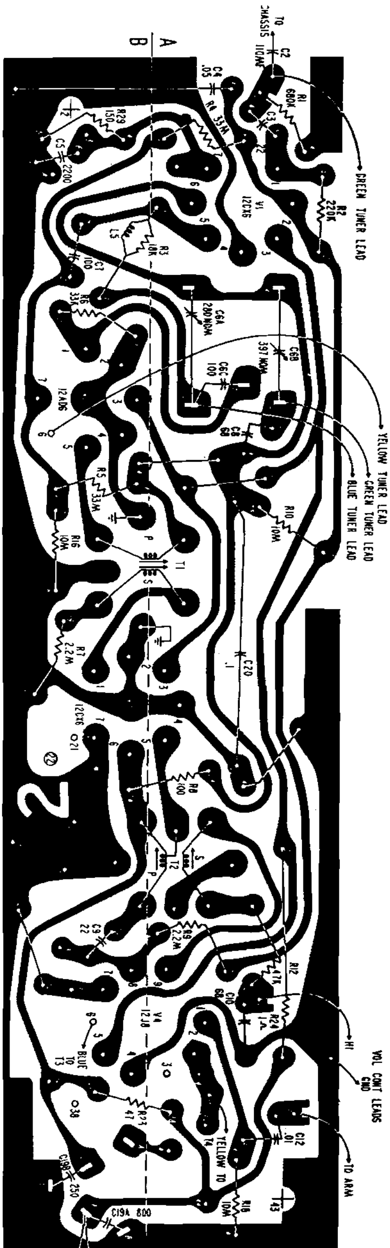

Fig. 6-17: Layout of the etched circuit board used in the Model R84BC car radio.

tube stages is provided by an "L-type" filter made up of R23 and the 100 Mfd. section of C15, and for the power output stage (and screen grid of the driver) through L5 and C15's 500 Mfd. section. The possible introduction of noise through the external loudspeaker leads is minimized by spark-plate capacitors C18 and C19.

TRUCK RADIOS. As far as basic circuitry is concerned, there is relatively little difference between Broadcast-Band receivers designed for trucks and those designed for passenger cars. Generally speaking, car radios are fancier in physical appearance and may be equipped with such refinements as push-button tuning; truck radios are simpler and more functional. The components making up the Bendix Models R74BT and R84BT truck radios are shown in Fig. 6-21. The two models are identical, and were designed for use in all 1957 and 1958 Ford trucks (Ford Model Numbers FEM-18805-A and FEM-18805-B). The receiver's schematic diagram is given in Fig. 6-22, with interior chassis views, showing component placement and Alignment adjustments, diagrammed in Fig. 6-23; etched circuit board layout is given in Fig. 6-24. Full Alignment data is given in Table 6-E. Tuning the range 540 to 1600 KC, the R74BT (and R84BT) uses an I.F. of 262.5 KC. It requires 1.5 amperes when powered from a 14.4 volt D.C. source, and can deliver up to 2.5 watts of audio power to its oval PM loudspeaker.

ALIGNMENT

Connect a VTVM across capacitor C10 (A30 on printed circuit board to ground). Set Volume Control to minimum, set Tone Control to normal (full CW). Attenuate signal generator as required to keep VTVM reading between one and two volts.

STEP	GENERATOR CONNECTION	GENERATOR FREQUENCY	SET TUNER TO	ADJUST	REMARKS
1	Thru 0.1 mf cond. to pin 7 of conv. V2.	262.5 kc	HI-END STOP	T2 LOWER T2 TOP T1 LOWER T1 TOP	Adjust for maximum VTVM reading.
2	Thru DUMMY ANT. TO ANT. RECEPT.	1605 kc	HI-END STOP	C6B C6A C1	Adjust in order for maximum.
3	With radio in car and antenna fully extended, tune in a weak station near 1600 kc. Readjust antenna trimmer C1 for maximum.				
	IF A TUNING COIL OR CORE HAS BEEN REPLACED, PROCEED AS FOLLOWS:				
4			HI-END STOP	L1 L2 L3	Back cores out of coils to where they just remain in coil form.
5	Thru DUMMY ANT. TO ANT. RECEPT.	1605 kc	HI-END STOP	C6B C6A C1	Adjust in order for maximum.
6	Thru DUMMY ANT. TO ANT. RECEPT.	1200 kc	0.285 inch carriage movement from HI-END STOP.	L3 L2 L1	Adjust cores in order for maximum.
7	REPEAT STEPS 5 AND 6 UNTIL NO FURTHER GAIN IN OUTPUT CAN BE OBTAINED.				

TABLE 6-C: Alignment data for the BENDIX Model R84BC receiver.

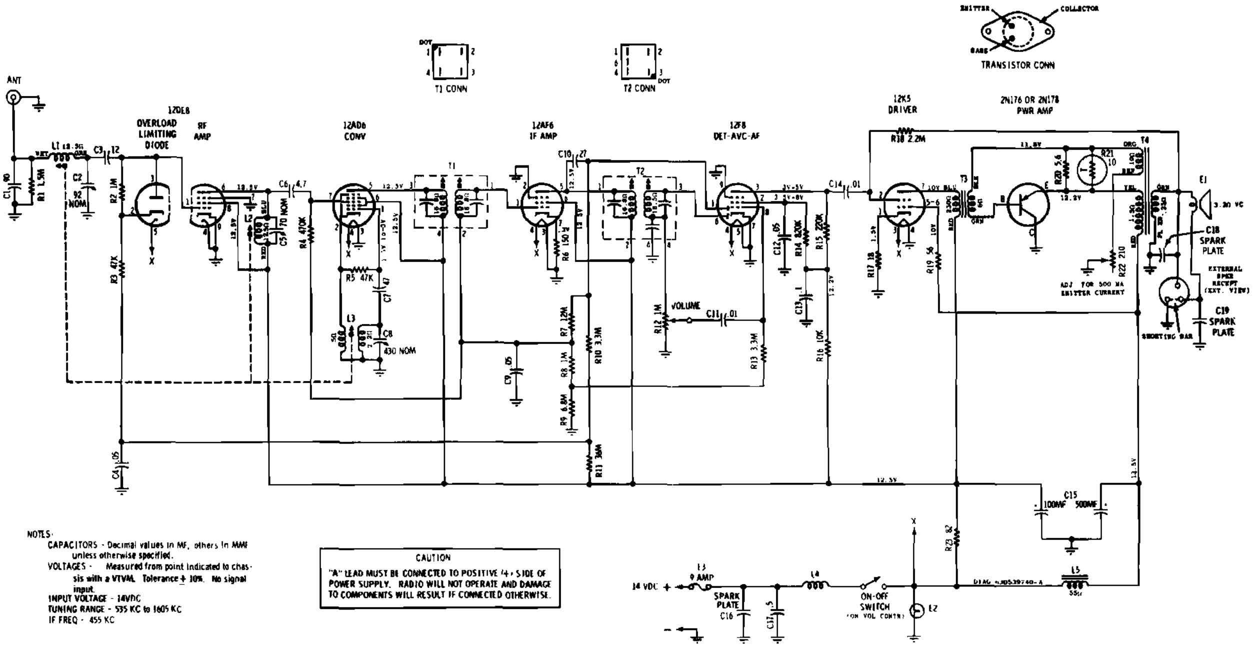

NOTES:
CAPACITORS - Decimal values in MF, others in MMF unless otherwise specified.
VOLTAGES - Measured from point indicated to chassis with a VTVM. Tolerance ± 10%. No signal input.
INPUT VOLTAGE - 14VDC
TUNING RANGE - 535 KC to 1605 KC
IF FREQ - 455 KC

CAUTION

"A" LEAD MUST BE CONNECTED TO POSITIVE (+) SIDE OF POWER SUPPLY. RADIO WILL NOT OPERATE AND DAMAGE TO COMPONENTS WILL RESULT IF CONNECTED OTHERWISE.

Fig. 6-18: Schematic diagram of the MOTOROLA Model 397X car radio. This is a "universal" receiver, designed for installation in a variety of automobiles, depending on the trim plate used.

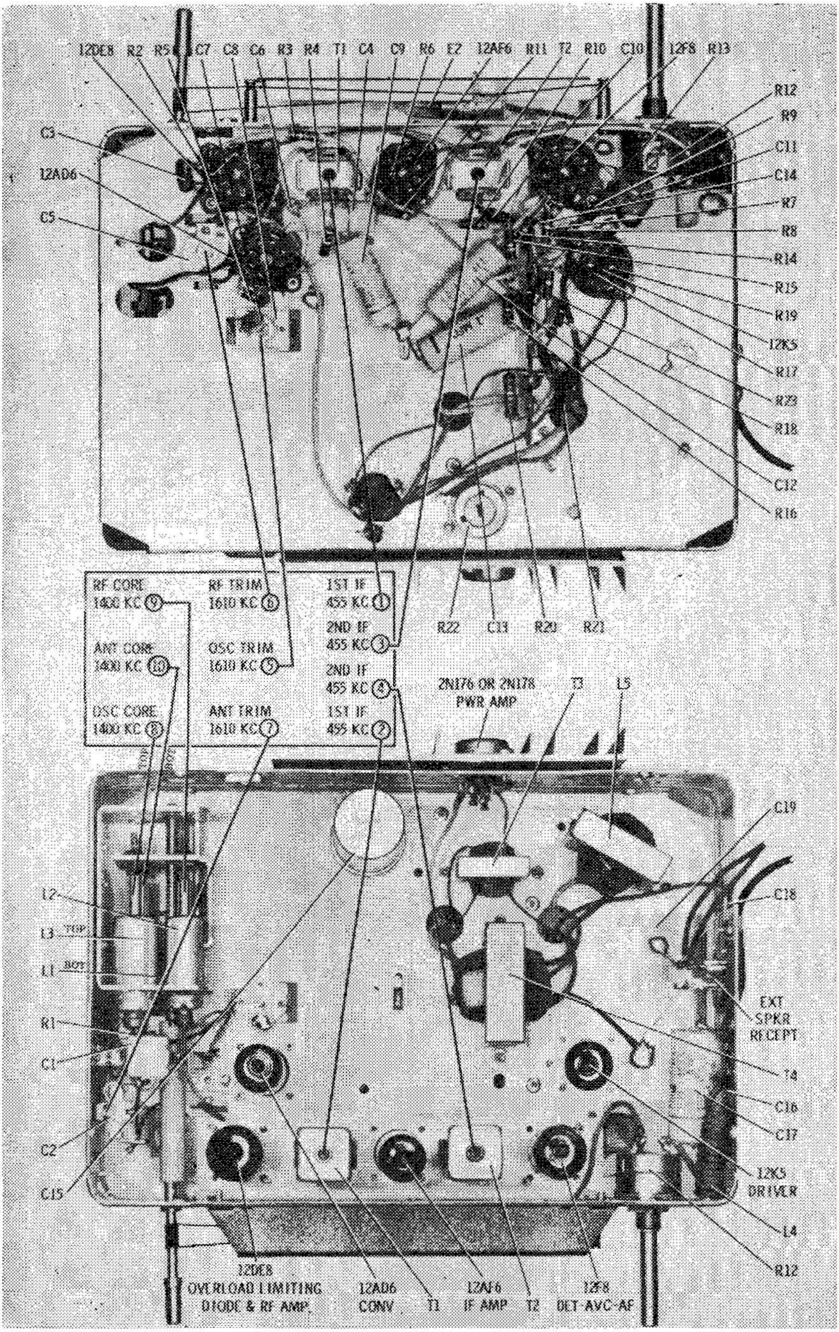

Fig. 6-19: Above and below chassis views of the Model 397X receiver, showing the location of major components and identifying alignment adjustments.

Referring to the schematic diagram, Fig. 6-22, we see that the circuit is very similar to that used in car radios. A variable inductance tuning arrangement is used, with the movable cores of coils L1, L2, and L3-L4 ganged mechanically. V1 serves as an R.F. amplifier, V2 as a converter, and V3 as an I.F. amplifier. V4's diode

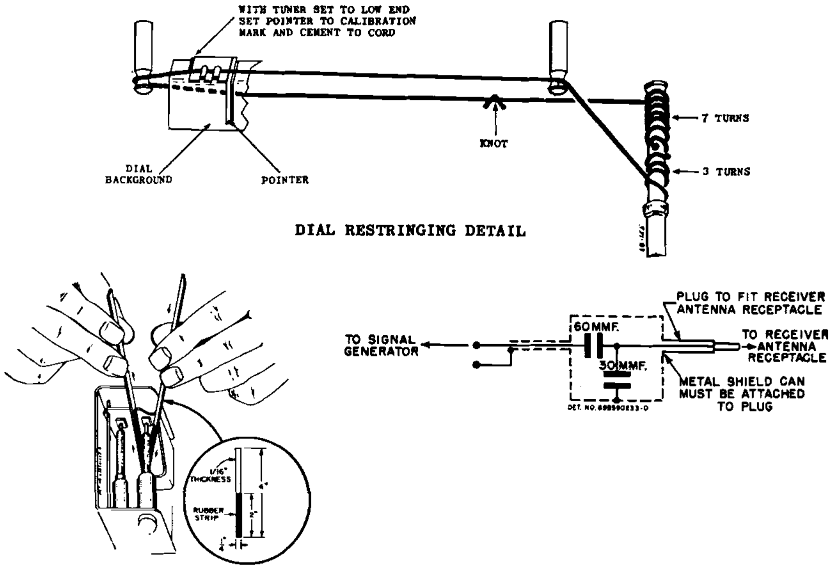

Fig. 6-20: Servicing details for the Model 397X receiver... dial cord restringing diagram is given at (a), core alignment tool detail is shown at (b), and the "dummy antenna" needed for alignment is diagrammed at (c).

ALIGNMENT

Connect an output meter across the speaker voice coil. Set volume to maximum. Attenuate generator output to maintain 1.79 volts on output meter at all times to prevent overloading the receiver.

STEP	GENERATOR CONNECTION	GENERATOR FREQUENCY (400 cycle mod)	TUNER SET TO	ADJUST	REMARKS
IF ALIGNMENT					
1.	Conv grid (pin 7) thru .1 mf capacitor and chassis	455 Kc	Hi end stop	1, 2, 3 & 4	Peak for maximum.
RF ALIGNMENT					
2.	Ant recept through dummy (see Fig.)	1610 Kc	Hi end stop	5, 6 & 7	Peak for maximum.
NOTE: Do not perform steps 3, 4, 5 & 6 unless tuner has been tampered with or components have been replaced. Before proceeding with step 3, back tuning cores 1" out of coils to eliminate their effect on trimmer adjustments. Construct core alignment tools as shown.					
3.	Ant recept through dummy (see Fig.)	1610 Kc	Hi end stop	5, 6 & 7	Peak for maximum.
4.	"	1400 Kc	13/64" from hi end stop	8, 9 & 10	Peak for maximum.
5.	"	1610 Kc	Hi end stop	5, 6 & 7	Peak for maximum.
6. Repeat steps 4 and 5 until no further increase, then cement tuning cores in place.					
ANTENNA TRIMMER					
7.	-	-	Weak station around 1400 Kc	7	With radio installed in car and antenna fully extended, peak antenna trimmer for maximum.

TABLE 6-D: Alignment data for the MOTOROLA Model 397X receiver.

sections serve as the receiver's 2nd detector and AVC rectifier, with AVC control bias applied to the R.F. and mixer stages. The detected audio signal appearing across *Volume* control R10 is coupled to the audio driver, V4, through C15. The driver, in turn, applies its amplified autput signal to the transistorized power stage through impedance matching transformer T3. A *PNP* power transistor, TX1, is used as a Class A common-emitter amplifier, and delivers its output to the PM loudspeaker through step-down auto-transformer T4.

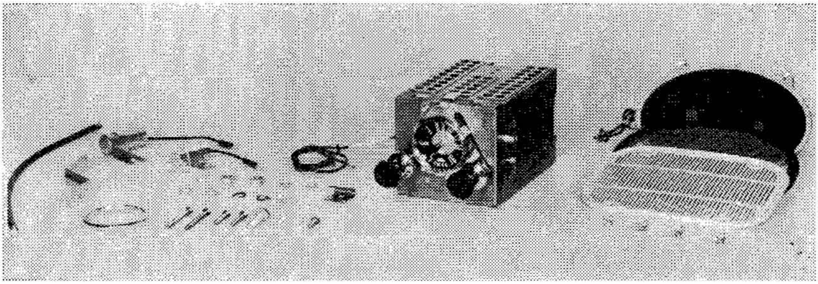

Fig. 6-21: Photo giving an overall view of the BENDIX Model R74BT (or Mod. R84BT) receiver, its loudspeaker and grille, and installation components.

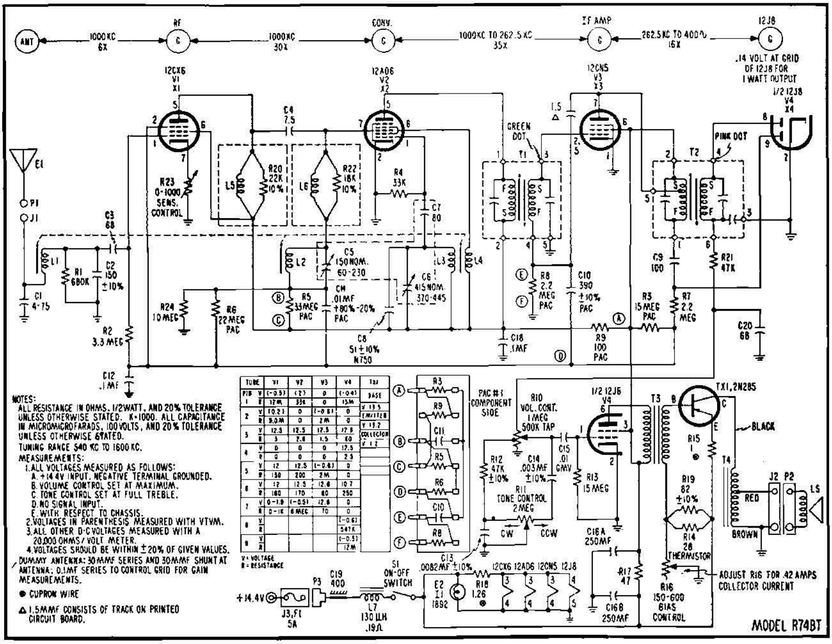

NOTES:

ALL RESISTANCE IN OHMS, 1/2WATT, AND 20% TOLERANCE UNLESS OTHERWISE STATED. K=1000. ALL CAPACITANCE IN MICROMICROFARADS, 100 VOLTS, AND 20% TOLERANCE UNLESS OTHERWISE STATED.

TUNING RANGE 540 KC TO 1600 KC.

MEASUREMENTS:

1. ALL VOLTAGES MEASURED AS FOLLOWS:
   - A. +14.4V INPUT, NEGATIVE TERMINAL GROUNDED.
   - B. VOLUME CONTROL SET AT MAXIMUM.
   - C. TONE CONTROL SET AT FULL TREBLE.
   - D. NO SIGNAL INPUT.
   - E. WITH RESPECT TO CHASSIS.
2. VOLTAGES IN PARENTHESIS MEASURED WITH VTVM.
3. ALL OTHER D-C VOLTAGES MEASURED WITH A 20,000 OHMS/VOLT METER.
4. VOLTAGES SHOULD BE WITHIN ±20% OF GIVEN VALUES.

DUMMY ANTENNA: 30MMF SERIES AND 30MMF SHUNT AT ANTENNA; 0.1MF SERIES TO CONTROL GRID FOR GAIN MEASUREMENTS.

● CUPRON WIRE

△ 1.5MMF CONSISTS OF TRACK ON PRINTED CIRCUIT BOARD.

TUBE PIN		V1	V2	V3	V4	TX1
1	V	(-0.5)	(2)	0	(-0.4)	BASE
	R	12M	33K	0	15M	V 13.5
2	V	(0.2)	0	(-0.8)	0	EMITTER
	R	5.0M	0	2M	0	V 13.2
3	V	12.5	12.5	12.5	12.8	COLLECTOR
	R	3	2.8	1.5	60	V 1.2
4	V	0	0	0	12.5	
	R	0	0	0	2.5	
5	V	12	12.5	(-0.8)	0	
	R	150	200	2M	0	
6	V	12	12.5	12.6	10.7	
	R	160	170	80	250	
7	V	0-1.9	(-0.5)	12.6	0	
	R	0-1K	6 MEG	70	0	
8	V				(-0.6)	
	R				547K	
9	V				(-0.5)	
	R				12M	

V = VOLTAGE
R = RESISTANCE

Fig. 6-22: Schematic wiring diagram of the Model R74BT (R84BT) receiver. This radio is designed for installation in FORD trucks.

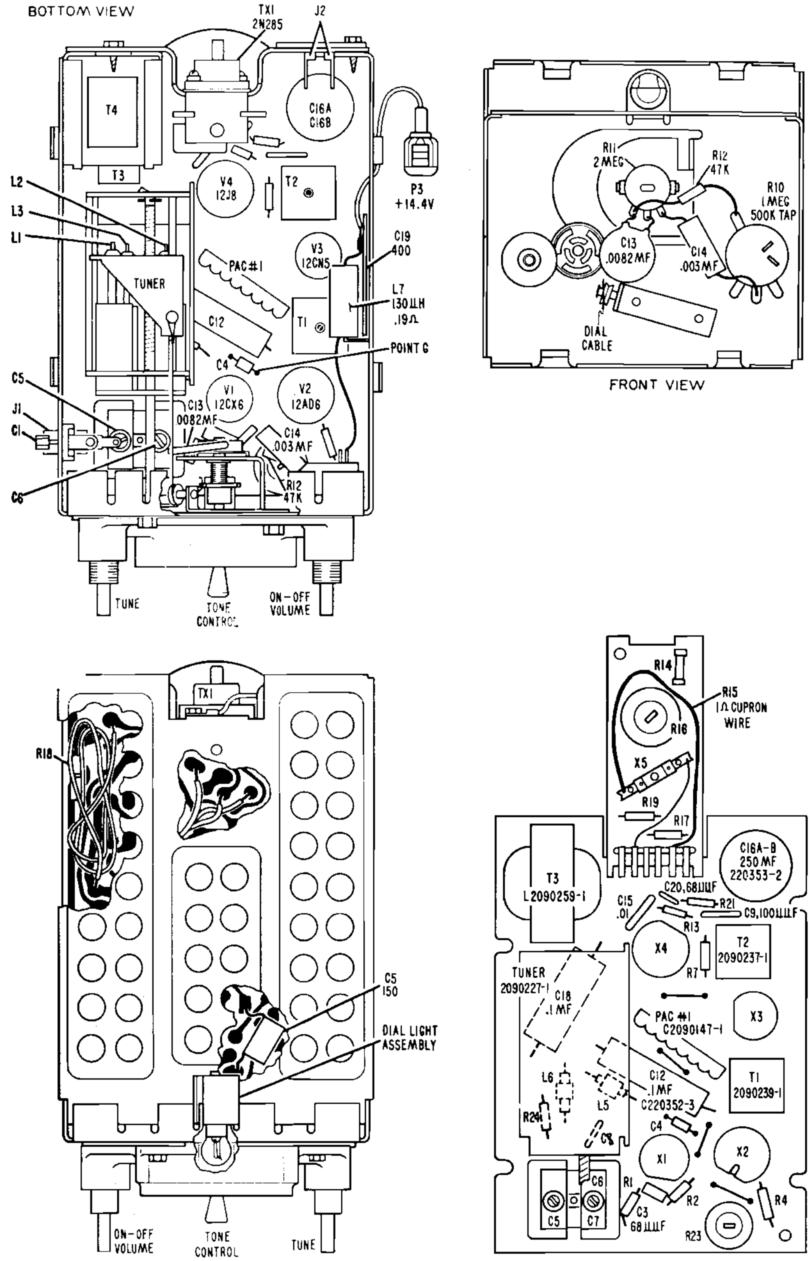

Fig. 6-23: Chassis layout views of the Model R74BT (R84BT) receiver.

Transistor base bias is furnished by a voltage-divider made up of fixed resistor R19 shunted by thermistor R14, and *bias control* R16. Unbypassed emitter resistor R15 serves to stabilize amplifier operation. Finally, line filtering is provided by spark-plate C19 and choke L7.

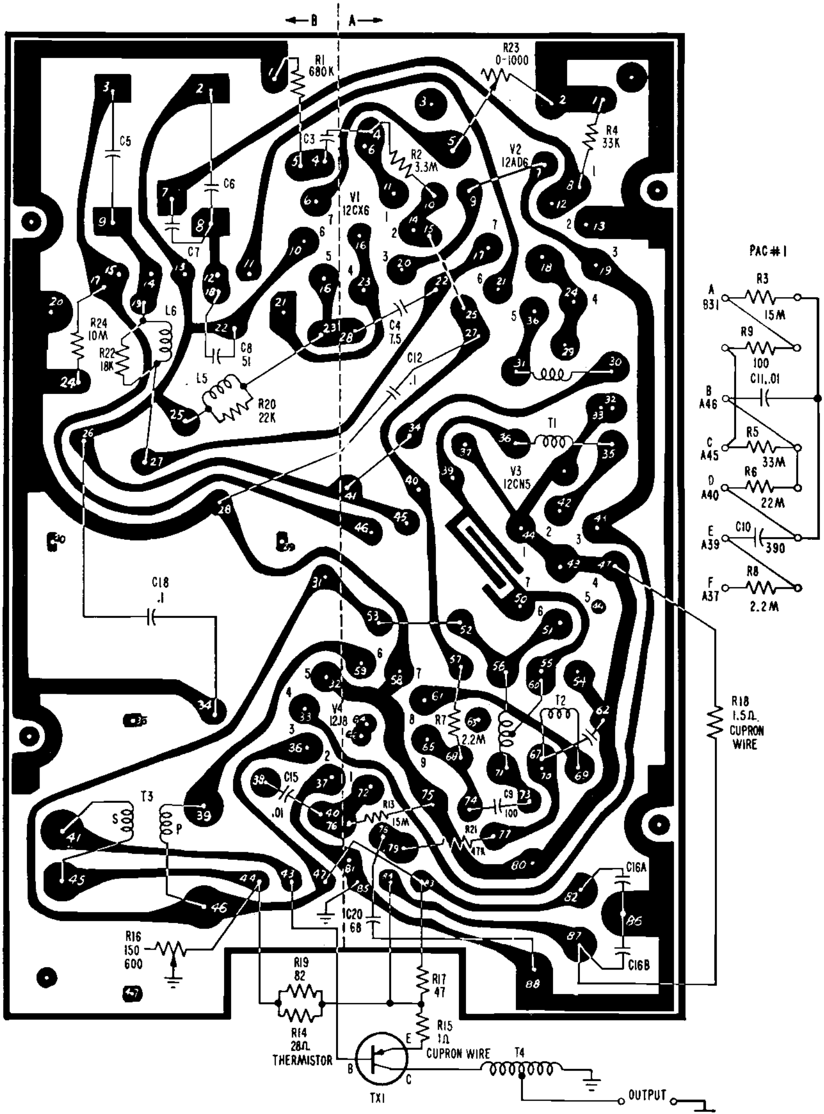

Fig. 6-24: Layout diagram of the printed circuit board used in the receiver shown in Fig. 6-21.

FM TUNER. The overwhelming majority of all automobile receivers are designed for reception of the AM Broadcast-Band (approximately 540-1600 KC) only. A few FM Broadcast-Band (88-108 MC) radio sets have been manufactured, but these, for the most part, have been offered by small producers and distributed in very limited quantities. The average service technician may seldom, if ever, come in contact with such receivers. In contrast, several of the larger auto radio manufacturers have produced *FM Tuners;* these are distinguished from *radio sets* in that they include the R.F., converter, I.F. and detector sections only, and are intended for use with a standard AM Receiver. The AM set's audio amplifier and loudspeaker system, then, becomes common to *both* types of reception.

ALIGNMENT

Connect an output meter across speaker voice coil. LEAVE SPEAKER CONNECTED TO SET. Set volume control to maximum and tone control to high. Attenuate signal generator as required to keep output level to 1.75 volts rms to prevent overloading receiver. The dial pointer should straddle the figure 1 on 16 when tuner is set to hi-end stop.

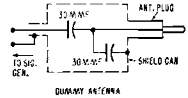

DUMMY ANTENNA

STEP	GENERATOR CONNECTION	GENERATOR FREQUENCY	SET TUNER TO	ADJUST	REMARKS
1	Thru 0.1 mf cond. to pin 7 of conv. V2 (POINT G)	262.5 kc	HI-END STOP	T2 LOWER T2 TOP T1 LOWER T1 TOP	Adjust for maximum output.
2	Thru DUMMY ANT TO ANT RECEPT.	1605 kc	HI-END STOP	C6 C5 C1	Adjust in order for maximum output.
3	With radio in car and antenna fully extended, tune in a weak station near 1600 kc. Readjust antenna trimmer C1 for maximum.				
	IF A TUNING COIL OR CORE HAS BEEN REPLACED, PROCEED AS FOLLOWS:				
4			HI-END STOP	L1 L2 L3	Back cores out of coils to where they just remain in coil form.
5	Thru DUMMY ANT. TO ANT. RECEPT.	1605 kc	HI-END STOP	C6 C5 C1	Adjust in order for maximum output.
6	Thru DUMMY ANT. TO ANT. RECEPT.	1200 kc	1200 kc	L3 L2 L1	Adjust cores in order for maximum output.
7	REPEAT STEPS 5 AND 6 UNTIL NO FURTHER GAIN IN OUTPUT CAN BE OBTAINED.				

TABLE 6-E: Alignment data for the Model R74BT (R84BT) truck radio receiver.

The Bendix Model FM88BH represents typical hybrid FM Tuner design. This instrument was designed for custom installation in 1958 Lincoln automobiles and carries Lincoln Model No. FFC-15491-B. The set's schematic wiring diagram is given in Fig. 6-25; above and below chassis views, showing component locations, are diagrammed in Figs. 6-26(a) and 6-26(b), respectively. Tuning the FM Broadcast Band from 88 to 108 MC, the FM88BH uses an I.F. of 10.7 MC; I.F. Alignment data is given in Table 6-F, with R.F.-

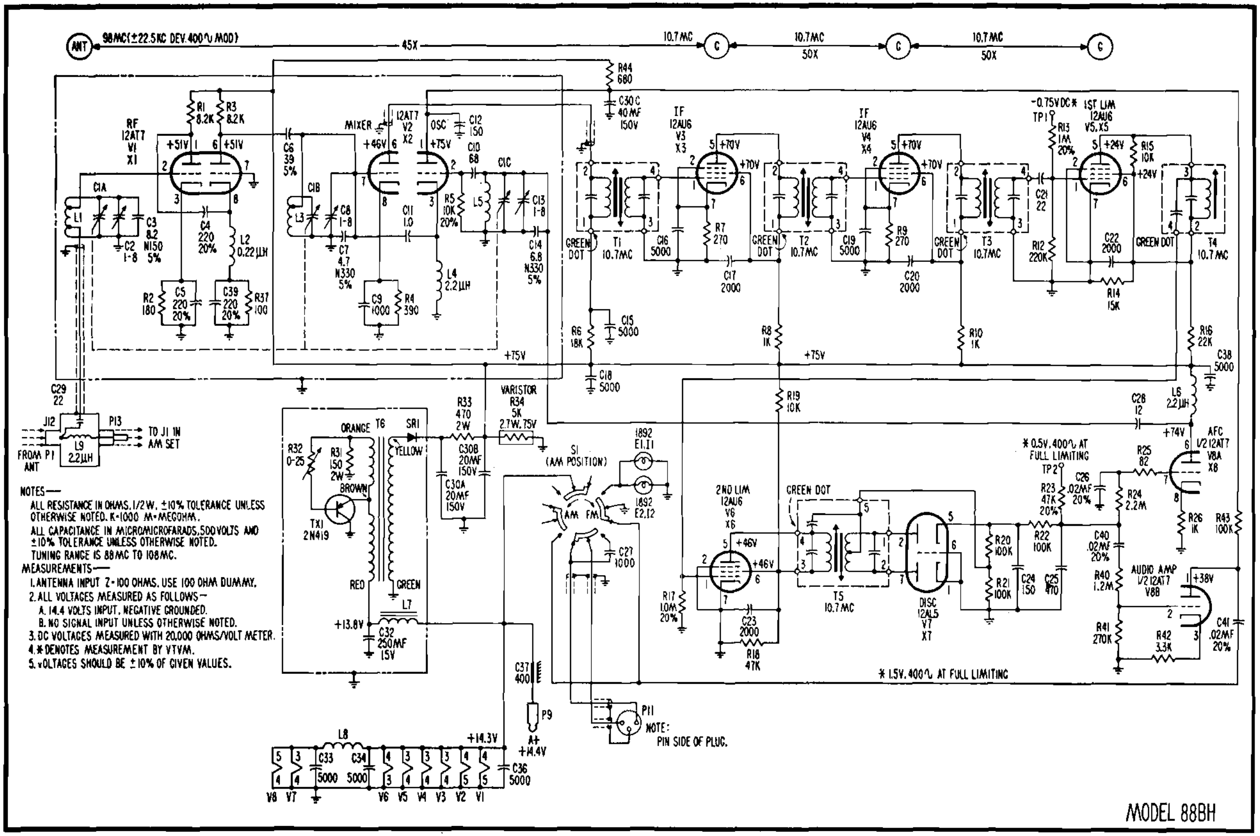

NOTES—

ALL RESISTANCE IN OHMS, 1/2W, ±10% TOLERANCE UNLESS OTHERWISE NOTED. K=1000 M=MEGOHM.

ALL CAPACITANCE IN MICROMICROFARADS, 500VOLTS AND ±10% TOLERANCE UNLESS OTHERWISE NOTED.

TUNING RANGE IS 88MC TO 108MC.

MEASUREMENTS—

1. ANTENNA INPUT Z=100 OHMS. USE 100 OHM DUMMY.
2. ALL VOLTAGES MEASURED AS FOLLOWS—
   A. 14.4 VOLTS INPUT, NEGATIVE GROUNDED.
   B. NO SIGNAL INPUT UNLESS OTHERWISE NOTED.
3. DC VOLTAGES MEASURED WITH 20,000 OHMS/VOLT METER.
4. * DENOTES MEASUREMENT BY VTVM.
5. VOLTAGES SHOULD BE ±10% OF GIVEN VALUES.

Fig. 6-25: Schematic diagram of the BENDIX Model FM88BH receiver. Designed for use in 1958 LINCOLNS, this receiver covers the FM Broadcast Band and uses the audio system of a standard AM car radio.

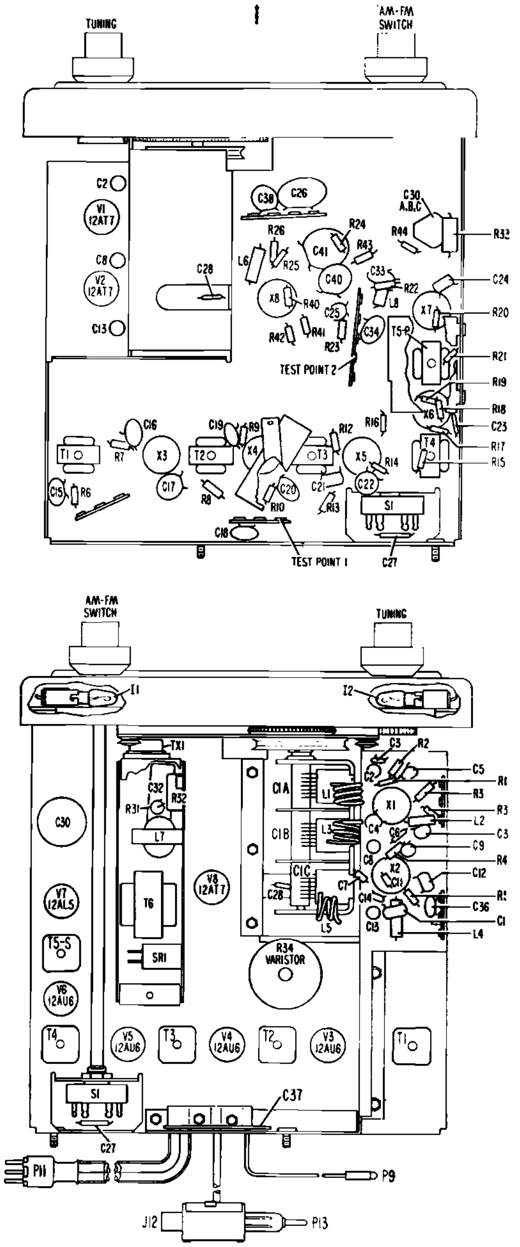

Fig. 6-26: Above (a) and below (b) chassis layout diagrams of the Model FM88BH FM Tuner.

converter Alignment procedure outlined in Table 6-G. The set has a sensitivity of 10 microvolts for 30-db noise quieting, and can deliver an output signal of 1.5 volts rms (audio) at full limiting. Using eight *standard,* rather than "low-voltage," miniature tubes and a single *PNP* power transistor, the tuner requires 2.0 amperes at 14.4 volts D.C. When installed in an automobile, it uses the car's regular antenna, and feeds its output to the audio section of the car's standard AM receiver, with a selector switch (S1, Fig. 6-25) used to select either "AM" or "FM" reception.

An examination of the schematic diagram, Fig. 6-25, reveals several interesting features. First, of course, we note that "high-voltage" tubes are used in place of the 12-volt tubes found in the AM receiver circuits we reviewed. These tubes are employed to take advantage of their superior high frequency characteristics. We note, too, that the transistor-operated audio output stage is missing; this is expected, of course, since the tuner is designed to use the audio section of another set. In place of the output stage, a power transistor is used in a "B" high-voltage supply circuit, eliminating the need for a vibrator power pack (more about this later).

Turning to the input circuit, a special coupling network made up of L9 and C29 is used in series with the antenna lead from the automobile's regular antenna; this permits a single antenna to be used for

STEP	PROCEDURE
1	Connect jumper across C26 to disable AFC circuit.
2	Connect Tuner to 14.4 VDC power source – Neg. to chassis, Pos. to lead P9.
3	With AM-FM switch in FM position, connect VTVM to TP1 (Neg. lead) and chassis (Pos.).
4	Lift V2's shield enough to break ground connection. Connect AM Signal Generator to this ungrounded tube shield. Set VTVM to 0-3 VDC scale.
5	Set Signal Generator to deliver precise 10.7 MC unmodulated R.F. signal. Adjust the Level (or Output) control for a 1.5 to 2.0 VDC reading on VTVM.
6	Adjust top and bottom slugs of T3, T2, and T1, in order, for maximum VTVM reading. Readjust Level (Output) control to keep VTVM reading between 1.5 and 2.0 volts.
7	Repeat Step 6.
8	Move Neg. lead of VTVM from TP1 to TP2. Adjust top slug of T5 to obtain VTVM reading of approximately 1.5 volts.
9	Carefully adjust T4 and bottom slug of T5 for maximum VTVM reading. Next, carefully adjust top of T5 for Zero Crossover. The last setting is critical.
10	Disconnect Signal Generator and VTVM. Replace V2's shield.

TABLE 6-F: I.F. alignment data for the FM Tuner shown in Fig. 6-25. Refer to Fig. 6-26 for the location of alignment adjustments.

both AM and FM reception. From here, the signal is coupled to dual-triode V1, serving as low-noise cascode R.F. amplifier. V1's output is coupled through C6 to one-half of dual-triode V2, serving as a mixer; V2's second triode section is used as the receiver's local oscillator, with its frequency stabilized by a conventional automatic frequency control (AFC) circuit. V8A serves as the AFC control tube. The oscillator signal appearing across cathode coil L4 is injected into the mixer circuit through coupling capacitor C11. A three-gang tuning capacitor (C1A, C1B, and C1C) resonates the antenna coil L1, the mixer grid coil L3, and oscillator coil L5.

The 10.7 MC I.F. signal obtained from the mixer is selected and coupled to the first I.F. stage, V3, through double-tuned I.F. transformer T1. V3's output, in turn, is coupled to the 2nd I.F. amplifier, V4, through another double-tuned I.F. transformer, T2. Next, V4's amplified output signal is applied through a final double-tuned I.F. transformer, T3, to the 1st limiter stage, V5. From here, a single-tuned L-C circuit, T4, serves as V5's plate load, with the signal appearing across it capacitively coupled to the 2nd I.F. limiter V6. Sharp cut-off pentodes are used in the I.F. amplifier and limiter stages. The limiters serve their customary function of removing all amplitude modulation, including noise peaks, from the amplified I.F. signal. This is achieved by operating these two stages (V5 and V6)

STEP	PROCEDURE
1	With jumper across C26, Tuner connected to power source, and AM-FM switch in FM position, connect AM Signal Generator through a 100-ohm, ½ watt carbon resistor (dummy antenna) to J12. Set receiver's tuning condenser fully open. Adjust the Signal Generator to deliver an unmodulated signal at 108.5 MC.
2	Connect VTVM (3 VDC scale) to TP1 (Neg. lead) and chassis (Pos. lead).
3	Adjust C2, C8 and C13 until studs are approximately three-fourths out.
4	Carefully adjust C13 for maximum VTVM reading. Avoid false peaks. Correct setting is maximum VTVM reading with minimum input signal and is usually first peak as C13 is adjusted in from full out position.
5	Set Signal Generator to 86.5 MC. Close Tuner's tuning condenser. Carefully squeeze or spread L5 for maximum VTVM reading.
6	Set Signal Generator to 108 MC. Vary C1 for maximum VTVM reading, then adjust C2 and C8 for maximum VTVM indication.
7	Set Signal Generator to 88 MC. Vary C1 for peak VTVM reading, then squeeze or spread L1 and L3 to obtain peak VTVM indication.
8	Repeat above step to compensate for interaction.
9	Disconnect Signal Generator and VTVM. Remove jumper from C26.

TABLE 6-G: R.F. alignment data for the FM Tuner.

with lower plate and screen grid voltages, and adjusting grid bias so that saturation occurs with moderate level signals.

Limiter V6's output signal is coupled through tuned discriminator transformer T5 to a standard Foster-Seely FM discriminator using a dual-diode vacuum tube, V7. Two outputs are obtained from the discriminator. A D.C. output proportional to shifts in I.F. center frequency is coupled through R24, bypassed by C26, to AFC control tube V8A; this tube, in turn, is coupled to the local oscillator through C28 and acts to maintain a constant I.F. value, automatically correcting for local oscillator frequency drift. The discriminator's audio output signal is applied to resistance-coupled amplifier stage V8B through C40 and R40, appearing across grid resistor R41. Here, the audio signal is amplified, with the output appearing across V8B's plate load resistor R43 coupled through D.C. blocking capacitor C41 to the AM-FM selector switch S1. The selector switch is connected to output receptacle P11 which, in turn, is connected through an appropriate shielded cable to the AM Radio with which the FM Tuner is used.

The transistorized power supply circuit used to supply "B" voltage to the vacuum tubes deserves closer examination. Referring, then, to this circuit, we find that a *PNP* transistor is used as a *common-collector* Hartley oscillator, with tranformer T6 serving both to supply the feedback signal necessary to start and sustain oscillation and to step-up the oscillator's output to the high-voltage levels needed by the vacuum tube stages. The transistor's operating power is obtained from the car's 12-volt (nominally 14.4 volts in practice) electrical system through an "L-type" filter made up of L7 and C32. Base bias current is supplied by voltage divider R32-R31, with R32 made adjustable to permit a precise adjustment of D.C. output voltage. The oscillator operates at approximately 400 cps, making the use of a relatively simple ripple filter feasible. The stepped-up A.C. voltage appearing across T6's secondary is rectified by selenium diode SR1 and filtered by a "Pi-type" filter network consisting of C30A, R33, and C30B; a *varistor,* R34, is used as a voltage regulator, and will maintain the D.C. "B" voltage within a 10% tolerance, provided R32 is adjusted properly. The entire power supply circuit is shielded to prevent coupling to other sections of the tuner.

Power supply adjustment is a relatively simple operation. First, R32 is turned to a fully counterclockwise position. Next, the tuner is connected to an accurate 14.4 D.C. voltage source and turned "ON." After a few minutes "warm up," a VTVM is connected across varistor R34 (use the 100-volt scale). Finally, R32 is adjusted in a clockwise direction until exactly 75 volts appears across R34. An insulated screwdriver is used for this adjustment, *with special care* *taken not to overshoot the 75 volt reading.* If R32 is set too high, or if it is accidentally shorted to chassis ground, the transistor may be damaged by excessive current flow.

SIGNAL-SEEKING RADIO SETS

Early automobile receivers and a few present-day models employ a single-knob tuning arrangement similar to that found in portable and table-model home receivers. Here, the tuning knob is linked by a dial cord or other mechanical system to the variable capacitor or movable coil "slugs" used to tune resonant circuits to different station frequencies. This permits continuous tuning over the entire band. Such an arrangement is quite good, but can be bothersome to an auto operator, since his attention is diverted from driving while tuning his set to different stations. Under some conditions, a slight diversion of this type can have serious consequences. This situation led to the popularization of "push-button" tuning systems. A continuous tuning arrangement was retained, of course, but a mechanical (or electro-mechanical) linkage assembly was added to basic set designs to permit the semi-automatic selection of from four to eight local stations by simply depressing an appropriate pre-set button.

A four to eight position push-button station selector is quite adequate for local driving conditions, for most listeners have only a few "favorite" stations. However, where the automobile's driver does considerable cross-country driving, the push-button system soon fails to carry out its job of permitting rapid station selection. Local station frequencies vary in different areas, and the pre-set push-buttons become ineffective, since they tune the set only to their original settings; after 25 to 50 miles driving, the push-buttons might very well tune the set to "dead spots" on the band. The driver must then resort to conventional tuning or must take time to reset the push-buttons. The latter task could prove rather bothersome, since it would have to be carried out every hour or so.

To compensate for the inadequacy of push-button station selection systems for cross-country driving, car radio manufacturers have developed and introduced a number of "signal-seeking" or "search-tuning" designs. Here, a single or dual push-button (or lever) is provided. When the button is depressed, closing an appropriate switch, the receiver tunes across the entire band, stopping automatically when it picks up a station of sufficient signal strength. If the driver finds the program unacceptable, he need simply depress the button again, and the "search" is resumed.

Semi-automatic "signal-seeking" systems are largely electro-mechanical in operation and were introduced several years *prior* to

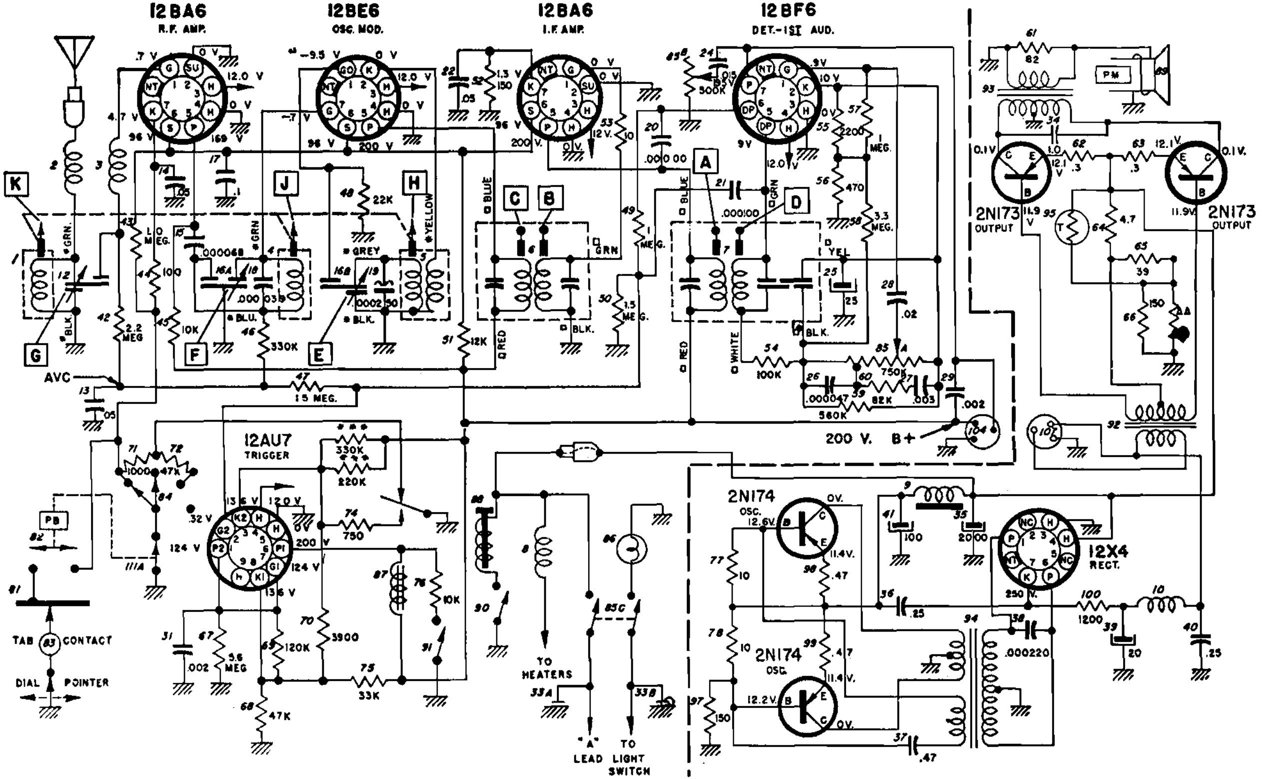

Fig. 6-27: Schematic wiring diagram of the DELCO Model 3725156 automobile receiver. This radio was used in CHEVROLET CORVETTE cars.

the development of hybrid radio designs. In operation, an electric motor or solenoid system is mechanically linked to the receiver's tuning mechanism and serves to drive the tuner over its range. The drive motor (or solenoid), in turn, is controlled by a front-panel push-button *and by* a trigger or relay device (vacuum tube or transistor) which, in turn, receives a control signal from the receiver proper. When hybrid radio designs were introduced, most of the signal-seeking designs were adapted to these sets with little or no basic modification. The basic circuit design used in signal-seeking radios . . . if the tuning mechanism is ignored . . . is essentially the same as that used in more conventional push-button or continuously tuned receivers. A detailed discussion of the various signal-seeking and search mechanisms in current use would be out-of-place here. However, we shall take a quick look at two typical hybrid receivers which employ this type of tuning, and shall examine a third set in greater detail.

CORVETTE RECEIVER. The Delco Radio Model 3725156 receiver, designed for use in all 1956 and 1957 Chevrolet Corvette Cars, is of major interest, not because it employs a signal-seeking tuner, but because the hybrid circuitry found in this set is different from that encountered in all of the other radio sets examined earlier in this Section. The receiver's schematic wiring diagram is given in Fig. 6-27, with various chassis views diagrammed in Fig. 6-28. Tuning from 540 to 1600 KC, the set uses a 262 KC I.F. value; detailed Alignment data is outlined in Table 6-H. The set uses four miniature vacuum tubes in its R.F.-I.F. section, plus a trigger tube for its automatic tuning mechanism; four *PNP* transistors are used in its audio output and power supply sections, plus a rectifier tube. The audio amplifier and power supply are assembled on a separate chassis and this, in turn, is mounted on the rear of the receiver's 8″ PM loudspeaker.

Turning to the schematic diagram, we find that standard rather than "low-voltage" tubes are used in the receiver circuit. The high "B" voltage needed by these tubes (200 volts) is obtained from a transistorized power supply (which we'll examine later). Otherwise, the circuit is quite conventional. A variable inductance tuning system is employed. Signals picked up by the antenna and selected by the tuned antenna circuit are applied to an R.F. amplifier and, from here, to a standard converter (OSC. MOD., Fig. 6-27). The converter's I.F. output signal is coupled to a single I.F. amplifier stage through a double-tuned I.F. transformer; the I.F. stage's output is applied to a conventional diode-type 2nd detector through a second I.F. transformer, with the resulting audio signal developed across the receiver's *Volume* control (part 85) and applied through a D.C.

AUDIO—POWER SUPPLY UNIT

RF—UNIT

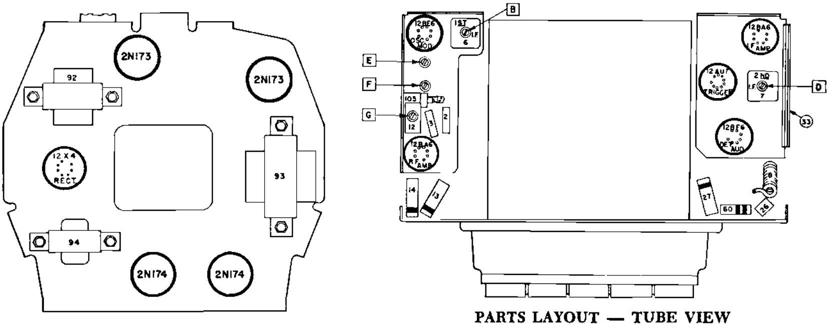

PARTS LAYOUT — TUBE VIEW

PARTS LAYOUT — TUBE VIEW

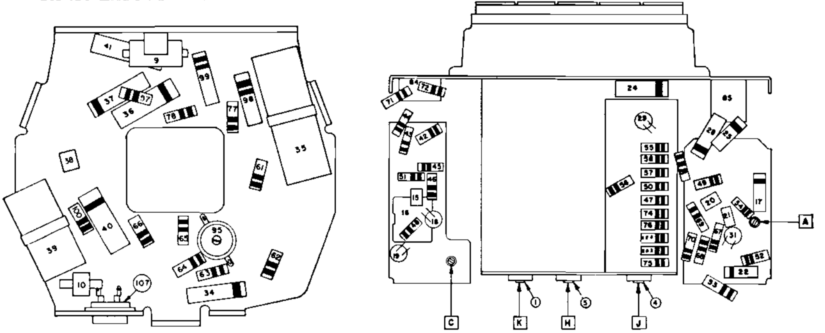

PARTS LAYOUT — CHASSIS VIEW

PARTS LAYOUT — CHASSIS VIEW

Fig. 6-28: Chassis layout diagrams of the Model 3725156 receiver.

SIGNAL SEEKING TUNER ALIGNMENT PROCEDURE:

NOTE: When aligning the signal seeker tuner type radio, be sure to use a vacuum tube voltmeter as indicated and be sure to follow the alignment sequence given—(Notice that the primary of the 2nd I.F. is aligned first.)

Output Meter Connection .... VTVM From AVC Line To Chassis
Generator Return .... Receiver Chassis
Dummy Antenna .... In Series With Generator
Volume Control .... Maximum Volume
Sensitivity Control .... Position 1
Tone Control .... Treble (Max. Clockwise)
Generator Output .... Not to Exceed 2 Volts at VTVM

Step	Dummy Antenna	Connect To	Signal Generator Frequency	Tune Receiver To	Adjust in Sequence
1	0.1 Mfd.	12BE6 Grid (Pin 7)	262 KC	*High Frequency Stop	A, B, C (Max.)
2	0.1 Mfd.	12BE6 Grid (Pin 7)	262 KC	High Frequency Stop	D (Min.)
3	.000068 Mfd.	Antenna Connector	1615 KC	High Frequency Stop	**E, F, G (Max.)
4	.000068 Mfd.	Antenna Connector	600 KC	Signal Generator Signal	J, K (Max.)
5	.000068 Mfd.	Antenna Connector	1615 KC	Signal Generator Signal	F, G (Max.)
6	.000068 Mfd.	Antenna Connector	1000 KC	Signal Generator Signal	***L

*To tune to high frequency, put a 0.070" feeler gauge (or bare #13 wire) in slot against the high frequency stop. (See tuner pictures). Turn manual control to allow the planetary arm to run against the feeler gauge.

**Before making this adjustment, check the setting of oscillator core "H." The rear of the core should be $1\frac{3}{32}$" from the mounting end of the coil form. This measurement is readily made by inserting a suitable plug in the mounting end of the coil form. The core adjustment is made from the mounting end of the coil form with a non-metallic screw driver. (It will be necessary to steady the core guide bar by applying a downward pressure at the antenna core end of the bar while making these adjustments.) If this adjustment is necessary, first dissolve the glyptal seal on the core stud and be sure to reseal after making the adjustment.

***"L" is the pointer adjustment on the end of the core guide bar—adjust so pointer reads 1000 KC.
With the radio installed and the antenna plugged in, adjust the antenna trimmer "C" for maximum volume with the radio tuned to a weak station between 600 and 1000 KC (see sticker on case).

TABLE 6-H: Alignment data for the CORVETTE car radio. Refer to Fig. 6-28 for the location of the adjustments specified in the last column.

blocking capacitor (part 28) to an audio amplifier. A separate diode is used to obtain a D.C. AVC control bias, and this is fed by a small capacitor (part 20) coupled to the I.F. stage's plate. The AVC bias is applied to the R.F. amplifier and converter stages (through part 47, bypassed by capacitor 13) and is also used as a control over the signal-seeking mechanism's *trigger* tube.

Continuing, the (tube) audio amplifier on the receiver chassis is coupled through interstage transformer 92 to a push-pull Class B output amplifier using *PNP* transistors in the common-emitter circuit configuration. The output stage, in turn, is coupled to the PM loudspeaker through a standard output transformer (part 93). Stabilized base bias is obtained for the push-pull amplifier by means of a resistive network which includes a thermistor (part 95) for temperature compensation. Further stabilization is achieved by the use of unbypassed emitter resistors (parts 62 and 63). Although type 2N173 transistors are specified in the diagram, some models of this set employed type 2N278. The manufacturer recommends the use of a *matched pair* of transistors in this circuit if replacement should prove necessary.

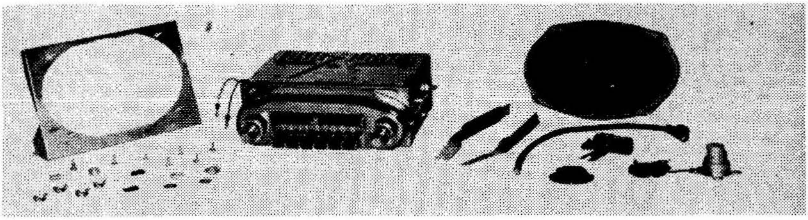

Fig. 6-29: This photo shows the BENDIX Model R85BM-S car radio receiver. Included in the illustration are the receiver itself, its loudspeaker, the loudspeaker mounting bracket, and basic installation accessories.

Referring, now, to the high voltage power supply, we see that a pair of transistors are used as a push-pull oscillator, with transformer 94 serving both to supply the feedback necessary to start and maintain oscillation and to step-up the A.C. oscillator voltage to the value needed by the vacuum tube circuitry. A common-emitter configuration is used, with the feedback signal applied to the base electrodes of sufficient amplitude to obtain blocking oscillator action; thus, only one transistor is conducting at any instant, with the collector current drawn high enough to drive the transformer's core to magnetic saturation. This permits highly efficient operation. Operating rate is about 20 KC. The high voltage developed across the oscillator transformer's secondary is applied to a conventional full-wave rectifier using a type 12X4 vacuum tube. The rectifier's pulsat-

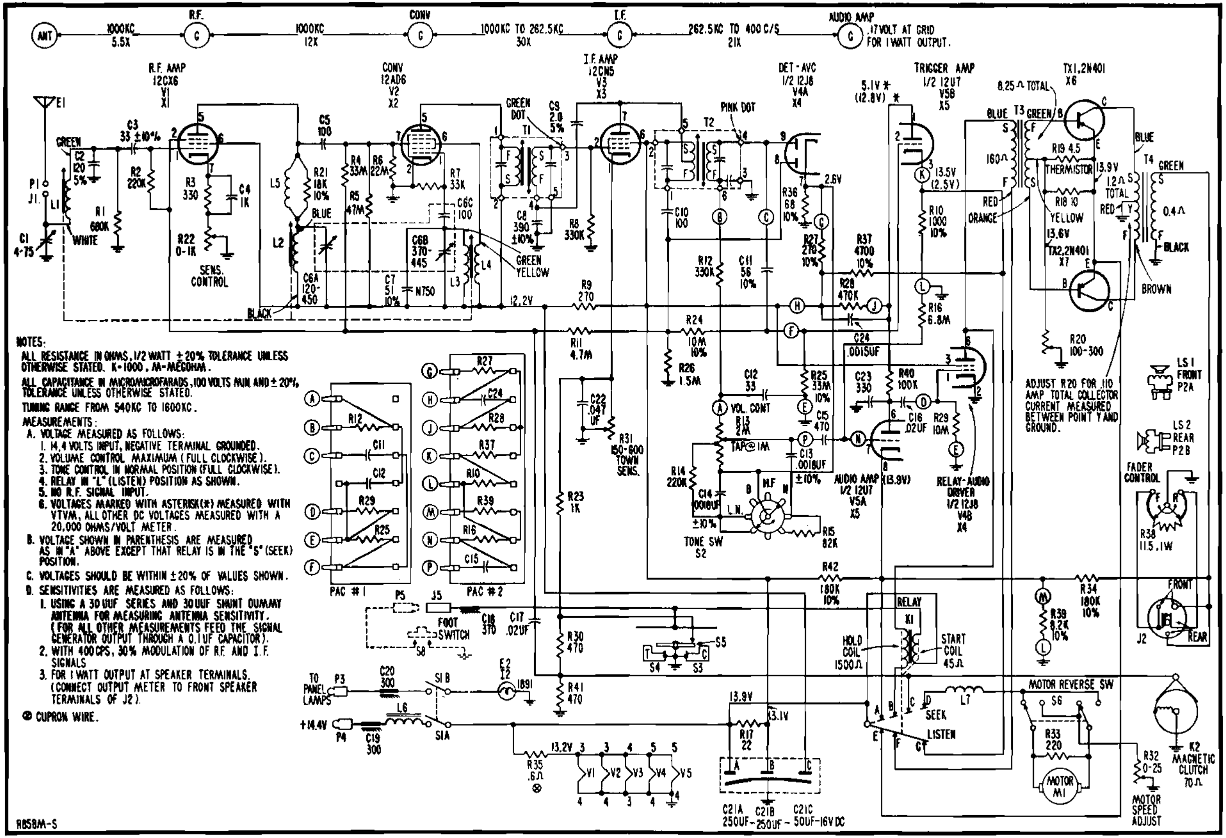

NOTES:

ALL RESISTANCE IN OHMS, 1/2 WATT ± 20% TOLERANCE UNLESS OTHERWISE STATED. K-1000, M-MEGOHM.

ALL CAPACITANCE IN MICROMICROFARADS, 100 VOLTS MIN. AND ± 20% TOLERANCE UNLESS OTHERWISE STATED.

TUNING RANGE FROM 540KC TO 1600KC.

MEASUREMENTS:

A. VOLTAGE MEASURED AS FOLLOWS:
   1. 14.4 VOLTS INPUT, NEGATIVE TERMINAL GROUNDED.
   2. VOLUME CONTROL MAXIMUM (FULL CLOCKWISE).
   3. TONE CONTROL IN NORMAL POSITION (FULL CLOCKWISE).
   4. RELAY IN "L" (LISTEN) POSITION AS SHOWN.
   5. NO R.F. SIGNAL INPUT.
   6. VOLTAGES MARKED WITH ASTERISK(*) MEASURED WITH VTVM, ALL OTHER DC VOLTAGES MEASURED WITH A 20,000 OHMS/VOLT METER.

B. VOLTAGE SHOWN IN PARENTHESIS ARE MEASURED AS IN "A" ABOVE EXCEPT THAT RELAY IS IN THE "S" (SEEK) POSITION.

C. VOLTAGES SHOULD BE WITHIN ± 20% OF VALUES SHOWN.

D. SENSITIVITIES ARE MEASURED AS FOLLOWS:
   1. USING A 30 UUF SERIES AND 30 UUF SHUNT DUMMY ANTENNA FOR MEASURING ANTENNA SENSITIVITY. (FOR ALL OTHER MEASUREMENTS FEED THE SIGNAL GENERATOR OUTPUT THROUGH A 0.1 UF CAPACITOR).
   2. WITH 400 CPS, 30% MODULATION OF R.F. AND I.F. SIGNALS
   3. FOR 1 WATT OUTPUT AT SPEAKER TERMINALS. (CONNECT OUTPUT METER TO FRONT SPEAKER TERMINALS OF J2).

⊗ CUPRON WIRE.

Fig. 6-30: Schematic wiring diagram of the Model R85BM-S receiver. This set was used in 1958 MERCURYS.

ing D.C. output is filtered through a conventional "Pi-type" network, including current limiting resistor 100, choke 10, and capacitors 39 and 40. The low-voltage power line is filtered by choke 9 and capacitors 35 and 41, with additional noise filtering provided by spark-plate capacitors 33A and 33B. Choke 8 provides additional filtering for the tube filaments.

In summary, the hybrid receiver circuit shown in Fig. 6-27 differs from the earlier circuits examined in that . . . (a) a push-pull rather than a single-ended power amplifier is used, and (b) a push-pull transistor oscillator is used in a high voltage "B" supply circuit. The latter, of course, serves as a replacement for a conventional vibrator-operated "B" supply.

MERCURY TRAVEL-TUNER. The components making up the Bendix Model R85BM-S car radio are shown in Fig. 6-29. This receiver was designed for use in 1958 Mercury automobiles (Mercury radio Model No. FEW-18805-T) and uses a semi-automatic signal-seeking tuner in addition to conventional push-buttons and manual tuning. The radio's schematic diagram is given in Fig. 6-30; interior chassis arrangement is diagrammed in Fig. 6-31, and the etched circuit board layout is given in Fig. 6-32. Using an I.F. of 262.5 KC, the receiver tunes from 540 to 1600 KC; detailed Alignment data is given in Table 6-I. With a maximum output of 5 watts to its 6" x 9" oval PM loudspeaker, the set employs five miniature 12-volt tubes and a pair of *PNP* power transistors. It requires 1.5 amperes at 14.4 volts D.C. when supplying 1 watt of audio output.

An examination of the schematic diagram, Fig. 6-30, reveals that a conventional hybrid receiver circuit is employed. Low voltage tubes are used in all tube stages, with the audio driver tube, V4B, transformer-coupled to a transistorized power amplifier. Here, however, a push-pull Class B power amplifier is employed, with a pair of transistors (TX1, TX2) used in the common-emitter configuration. Output stage bias is furnished by a voltage divider made up of R18 shunted by thermistor R19 in combination with *Bias* control R20. The power stage is coupled to the PM loudspeaker through output transformer T4.

Returning to the set's "front-end," an inductive tuning arrangement is used, with station tuning determined by the movement of ferrite cores in the antenna coil (L1), R.F. coil (L2), and oscillator coil (L3-L4). V1 serves as a standard R.F. amplifier, V2 as a converter, V3 as an I.F. amplifier, and one of V4A's diodes as a conventional diode-type 2nd detector. V4A's second diode serves as an AVC rectifier, with the resulting AVC bias applied to the signal-seeking tuner circuit, to the R.F. amplifier, and to the converter stage. The audio signal appearing across the 2nd detector's load

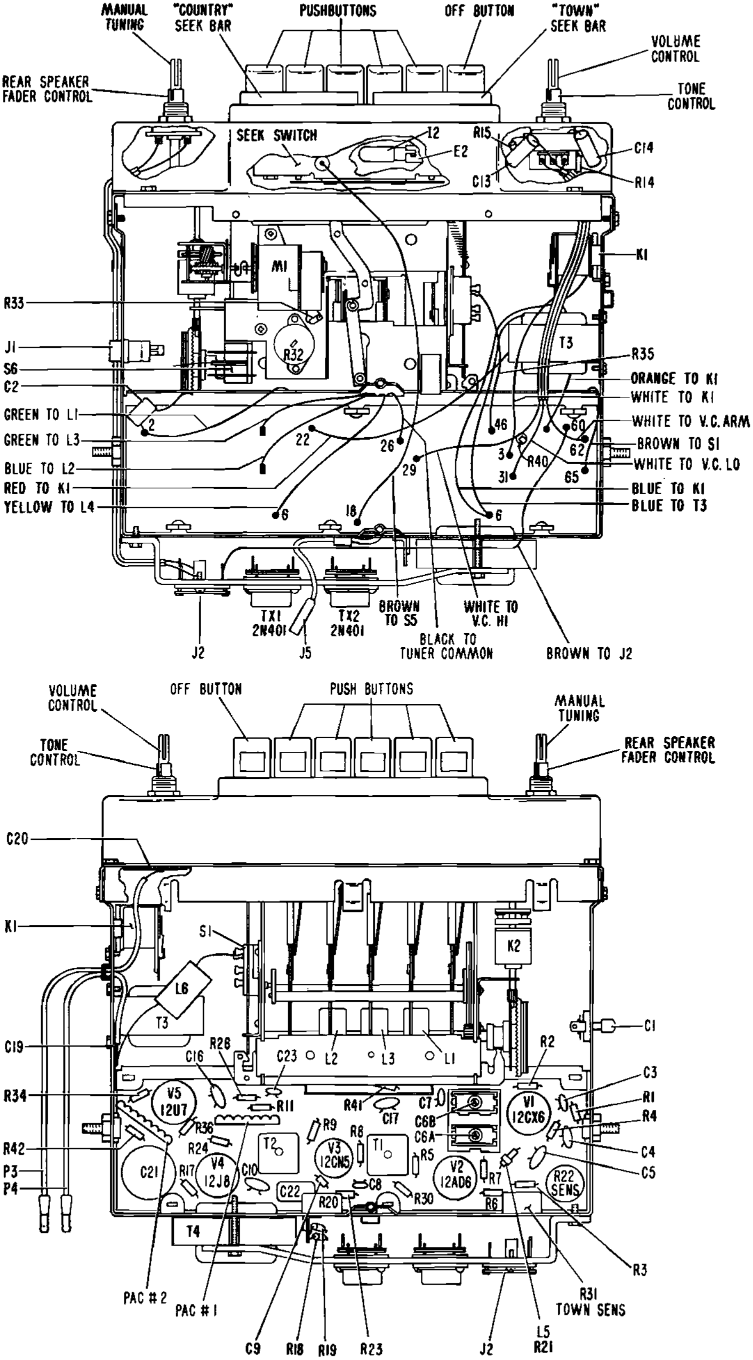

Fig. 6-31: Above and below chassis layout diagrams of the receiver shown in Fig. 6-29.

resistor, *Volume* control R13, is coupled through C15 to a two-stage resistance-coupled amplifier, V5A-V4B, with the second stage serving, as we have seen, as a driver for the power amplifier.

In operation, three factors determine the operation of the automatic tuning circuit . . . I.F. voltage, AVC voltage, and "seek" speed. The first two depend on received signal strength; the latter on drive motor speed. The I.F. signal developed when a station is tuned in controls the triggering action of V5B so that a tuner stops "seeking" and comes to rest on that station. Note that with relay K1 de-energized its back contacts supply power to the output stage, to V4B, and to V5B's cathode; here, the receiver operates normally on manual or push-button tuning.

When the tuning switch S3-S4 is closed, relay K1 is energized. V4B then receives its plate voltage through K1's "hold" coil and the relay is held in even if S3-S4 is released. With K1 energized, power is removed from the output amplifier and positive bias is removed from V5B's cathode; at the same time, additional contacts on K1 apply power to magnetic clutch K2, to V5A's cathode, and to drive motor M1. This, in turn, starts the motor (M1) coupled to the tuning system and the receiver starts "seeking" a signal, tuning over its full range. The motor is automatically reversed at each end of the dial by reversing switch S6, activated by arms mounted on the tuner clutch assembly.

As a station is tuned in, an I.F. voltage is developed across T2's secondary. This is coupled through C11 to V5B's grid. Here, amplification and some detection takes place, with V5B starting to draw current through plate resistor R28 and developing a negative pulse which, coupled through R40 and C16 to V4B's grid, drives V4B to cut-off, de-energizing the "hold" coil and allowing K1 to drop out, returning to its normal "LISTEN" position. Since a positive bias is applied to V5A's cathode when K1 is in its "SEEK" position, no current flows through R40 and it has little effect on the negative pulse. The trigger point at which relay K1 drops out is maintained at the same distance from signal resonance regardless of station signal strength by applying a portion of the AVC voltage through R24 to V5B's grid (where it combines with the I.F. signal obtained through C11).

MOTOROLA SEARCH TUNER. Designed for custom installation in 1957 Ford cars, the Motorola Model 78MF radio (Ford Model No. FEG-18806-G) is a hybrid receiver using eight 12-volt vacuum tubes and two *PNP* power transistors. Its design typifies the three-way tuning systems (manual, push-button, and search) employed in many automobile radios; therefore, we will examine the operation of this set's tuning mechanism in detail. First, however, the receiver's

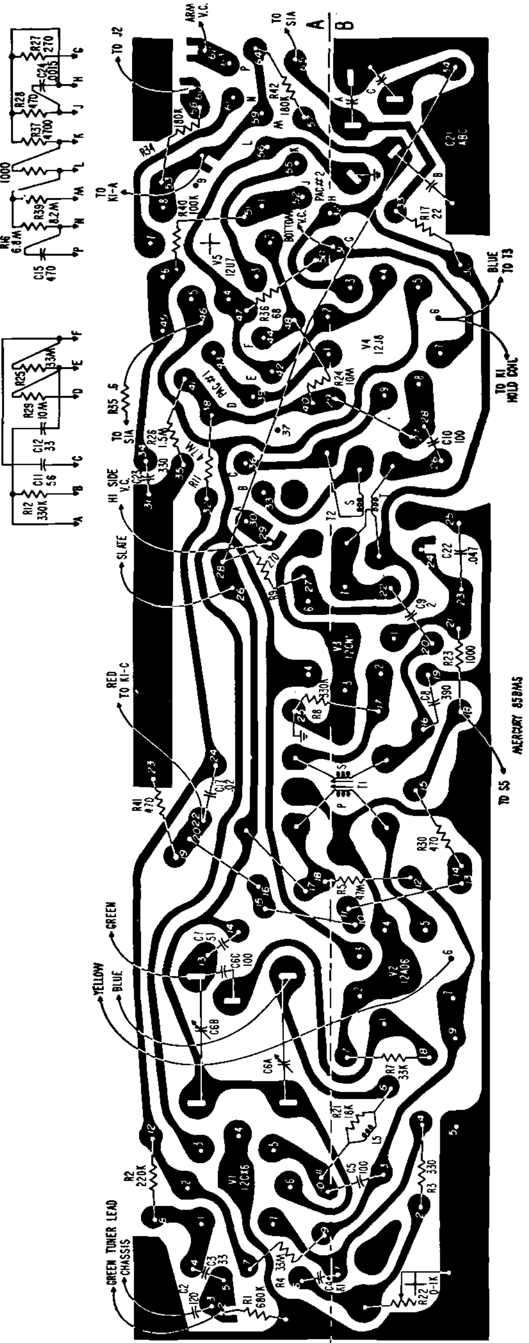

Fig. 6-32: Layout of the etched circuit board used in the BENDIX Model R85BM-S receiver.

schematic diagram is given in Fig. 6-33, with interior chassis views identifying alignment adjustments given in Fig. 6-34. The Model 78MF tunes from 540 to 1600 KC, using an I.F. of 262.5 KC; detailed Alignment data and accessory tool information is given in Table 6-J.

Referring to Fig. 6-33, we see that the familiar inductive tuning arrangement is employed. As in the other circuits studied, the 78MF has conventional R.F. amplifier and converter stages. The I.F. section differs from the earlier circuits in that *two* I.F. amplifiers are employed, with resistance-capacity coupling between stages. The amplified I.F. signal obtained from the 2nd I.F. stage is transformer-coupled (through T2) to a diode-type 2nd detector, with the audio signal developed across its load resistor, *Volume* control R16, coupled through R15 to a two-stage resistance-coupled audio amplifier. The second audio

ALIGNMENT

Connect a VTVM from T2 term. 6 to V4 pin 7, set Volume Control to minimum. Set Tone Control to NORMAL (FULL CW). Attenuate signal generator as required to keep VTVM reading between one and two volts.

STEP	GENERATOR CONNECTION	GENERATOR FREQUENCY	SET TUNER TO	ADJUST	REMARKS
1	Through .1 mf to conv. grid (V2 pin 7).	262.5 kc unmodulated.	Hi-end stop.	T2 Bottom T2 Top T1 Bottom T1 Top	Adjust in order for maximum VTVM reading. Repeat until no further increase can be obtained.
2	Through dummy antenna to ant. recept.	1605 kc unmodulated.	Hi-end stop.	C6B, C6A, C1	Adjust in order for maximum.
3	With radio in car and antenna fully extended, tune in a weak station near 1600 kc. Readjust antenna trimmer C1 for maximum.				
	If a tuning coil or core has been replaced, proceed as follows:				
4			Hi-end stop.	L1, L2, L3	Back tuning cores out of coils.
5	Through dummy antenna to ant. recept.	1605 kc unmodulated.	Hi-end stop.	C6B, C6A, C1	Adjust in order for maximum VTVM reading.
6	Through dummy antenna to ant. recept.	1000 kc unmodulated.	Exactly ½ inch carriage movement from hi-end stop.	L3, L2, L1	Adjust cores in order for maximum VTVM reading.
7	Repeat steps 5 and 6 until no further gain in output can be obtained.				
	To set sensitivity controls: Disconnect VTVM; connect output meter across speaker voice coil; set volume control to maximum, and tone control to normal (full cw).				
8	Through dummy antenna to ant. recept.	1000 kc at 3 microvolts modulated.	Tune for maximum.	R22	Adjust for 1.75 VRMS (approximately one watt).
9	Through dummy antenna to ant. recept.	1000 kc at 250 microvolts modulated. 30%.	Press TOWN seek-bar.	R31	Set R31 completely counterclockwise. Press TOWN seek-bar to start set seeking. Advance R31 clockwise in small increments until tuner stops on the 250 uv signal.
10	Through dummy antenna to ant. recept.	1000 kc at 125 microvolts modulated.	Press TOWN seek-bar.		See that tuner will not stop on 125 uv signal.

TABLE 6-I: Alignment data for the Model R85BM-S receiver.

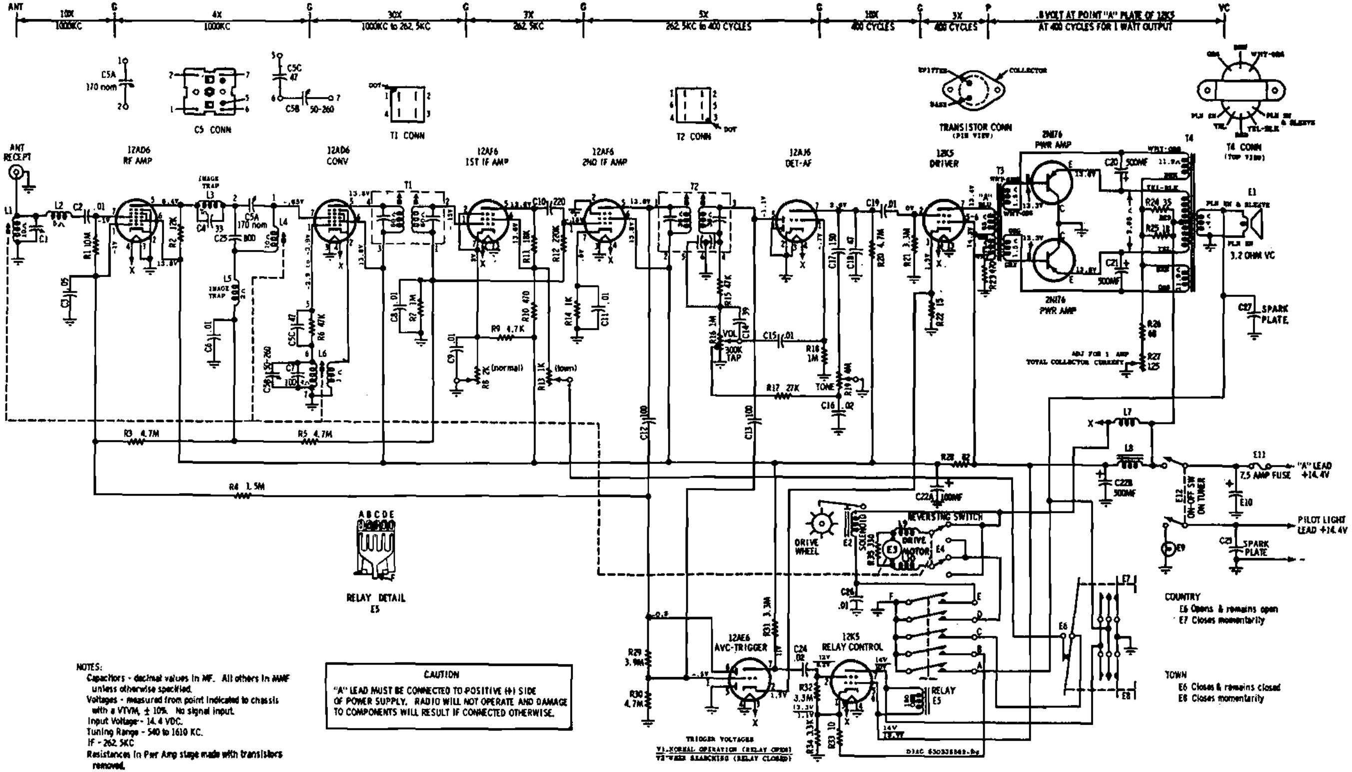

NOTES:
Capacitors - decimal values in MF. All others in MMF unless otherwise specified.
Voltages - measured from point indicated to chassis with a VTVM, ± 10%. No signal input.
Input Voltage - 14.4 VDC.
Tuning Range - 540 to 1610 KC.
IF - 262.5KC
Resistances in Pwr Amp stage made with transistors removed.

CAUTION

"A" LEAD MUST BE CONNECTED TO POSITIVE (+) SIDE OF POWER SUPPLY. RADIO WILL NOT OPERATE AND DAMAGE TO COMPONENTS WILL RESULT IF CONNECTED OTHERWISE.

Fig. 6-33: Schematic diagram of the MOTOROLA Model 78MF car radio.

stage serves as a driver and is coupled through interstage transformer T3 to a push-pull power amplifier using *PNP* transistors in a modified common-collector configuration. Output stage bias is furnished by a resistive network made up of R24, R25, R26 and *Bias Adjustment* control R27; R24 is a temperature-compensating thermistor. The output stage is of special interest in that it represents a push-pull version of the circuit shown in Fig. 6-2; as you may recall, this circuit functions as a *common-collector* amplifier as far as D.C. is concerned, but

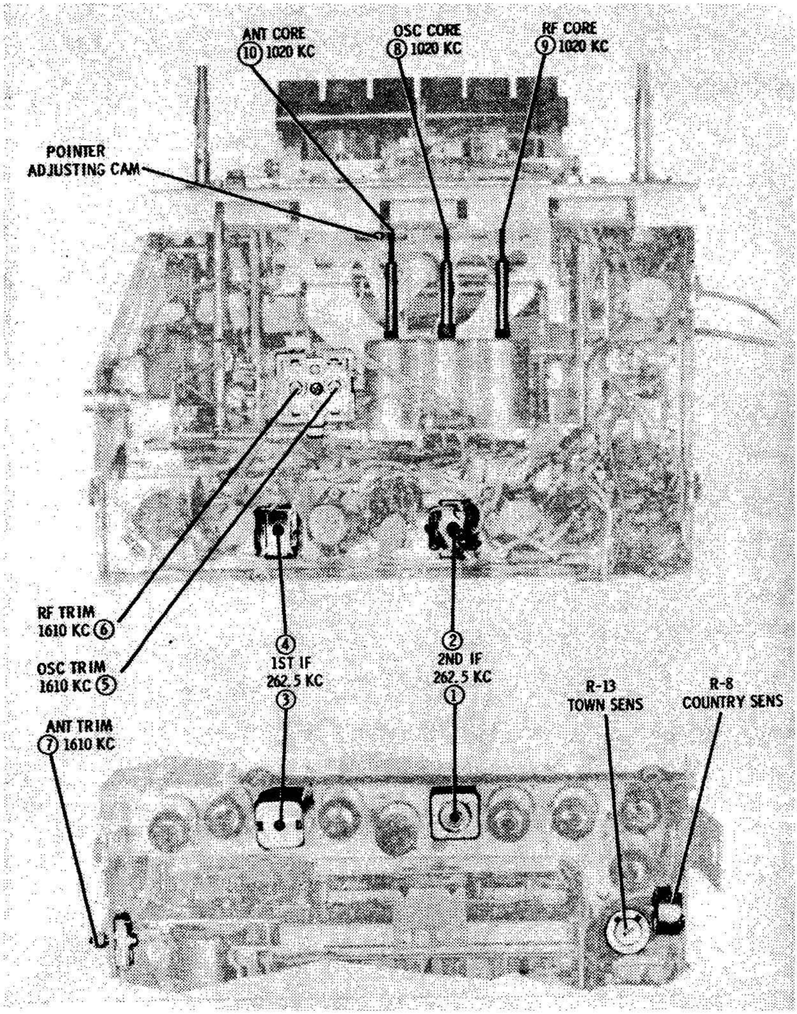

Fig. 6-34: Above and below chassis views of the Model 78MF radio receiver.

as a *common-emitter* circuit for signal (A.C.) currents. Capacitors C20 and C21 isolate the input signal to the base-emitter electrodes and permits the output signal to be developed in the collector-emitter circuit. Continuing, the push-pull amplifier is coupled to its PM loudspeaker load through output transformer T4. Finally, power supply filtering is provided by E10, spark-plate capacitor C23, choke L8, C22B, R28, and C22A.

The search tuning circuit is operated by two vacuum tubes . . . a dual diode-triode type 12AE6 and a 12K5 tetrode. The 12AE6 also

ALIGNMENT

Connect a VTVM from the AVC line to ground (pin #1 of 12AD6 RF amp & chassis). Set volume to minimum and tone to treble. Attenuate signal generator to maintain VTVM reading between 1.5 and 2 volts.

STEP	GENERATOR CONNECTION	GENERATOR FREQUENCY (400 cycle mod)	TUNER SET TO	ADJUST	REMARKS
IF ALIGNMENT					
1.	12AD6 conv. grid (pin 7) thru .1 mf & chassis	262.5 Kc	Hi end stop	2, 3 & 4	Adjust for maximum.
2.	"	"	"	1	Adjust for dip.
RF ALIGNMENT					
3.	Antenna recept thru dummy (see Figure)	1610 Kc	Hi end stop	5, 6 & 7	Adjust for maximum.
NOTE: Do not perform steps 4, 5, 6 & 7 unless the tuner has been tampered with or components have been replaced. Before proceeding with step 4, back tuning cores 1-3/8" out of tuning coils to eliminate their effect on trimmer adjustment.					
4.	Antenna recept thru dummy (see Figure)	1610 Kc	Hi end stop	5, 6 & 7	Adjust for maximum.
5.	"	1020 Kc	49/64" from hi end stop	8, 9 & 10	Adjust for maximum.
6.	"	1610 Kc	Hi end stop	5, 6 & 7	Adjust for maximum.
7. Repeat steps 5 & 6 until no further increase, then cement cores in place. Step No. 6 should be last adjustment.					
SENSITIVITY CONTROLS					
8.	Antenna recept thru dummy (see Figure)	1000 Kc at 5 microvolts	Tune for max	R8	Adjust for 1.79 volts output. (Connect output meter across voice coil and set volume control to maximum).
9.	"	1000 Kc at 100 microvolts	Tune for max	R13	Short case of R13 to chassis. Adjust for 1.79 volts output. (Connect output meter across voice coil and set volume control to maximum).
ANTENNA TRIMMER ADJUSTMENT					
10.			Weak station around 1400 Kc	7	Adjust for maximum with radio installed in car and antenna fully extended.

TO CALIBRATE POINTER
Tune radio to 1000 Kc signal and rotate pointer adjusting cam until center of pointer coincides with the center of the 1000 Kc mark on dial scale.

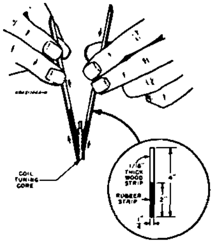

CORE ALIGNMENT TOOL DETAIL

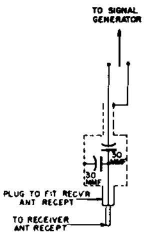

DUMMY ANTENNA DETAIL

TABLE 6-J: Alignment data for the Model 78MF car radio. Included are details of the special alignment tool needed and a diagram of the "dummy antenna" used.

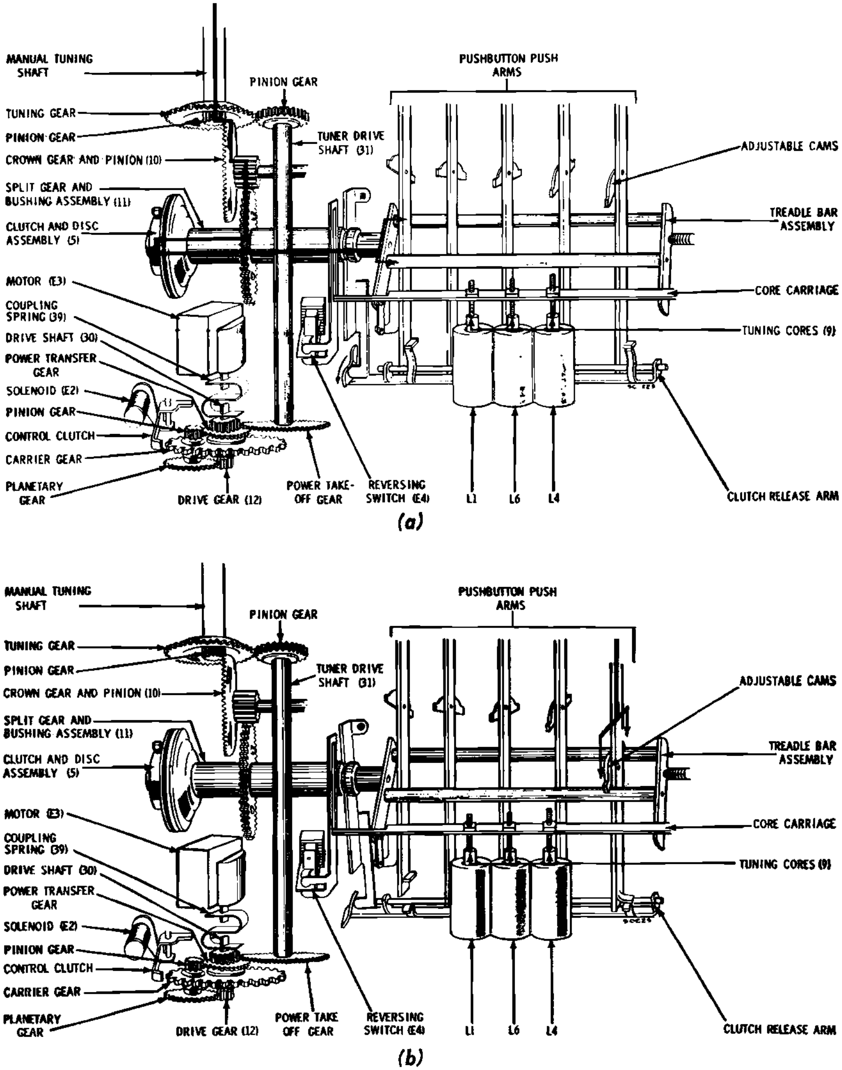

Fig. 6-35: The Model 78MF car radio... tuner details. The set-up used for MANUAL TUNING is shown at (a), for PUSH-BUTTON TUNING at (b).

serves to develop the receiver's AVC bias control voltage, which is applied to the R.F. amplifier, converter, and two I.F. stages.

Let's take a look, now, at the operation of the various tuning systems . . .

Manual tuning operation is illustrated in Fig. 6-35(a). Referring to this illustration, when the manual tuning shaft is rotated, the tuning and pinion gears rotate the crown gear and pinion assembly (10), thus turning the split gear and bushing assembly (11). Since the split gear and bushing are frictionally coupled to the clutch and disc assembly (5) fixed to the treadle bar mechanism, the treadle bar's core carriage moves the three tuning cores (9) in and out of

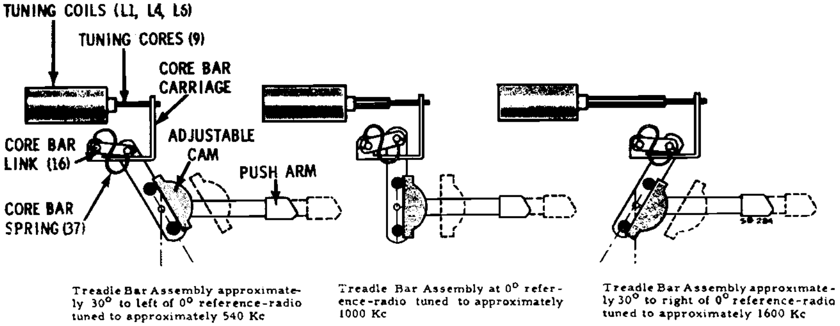

Treadle Bar Assembly approximately 30° to left of 0° reference-radio tuned to approximately 540 Kc

Treadle Bar Assembly at 0° reference-radio tuned to approximately 1000 Kc

Treadle Bar Assembly approximately 30° to right of 0° reference-radio tuned to approximately 1600 Kc

(a)

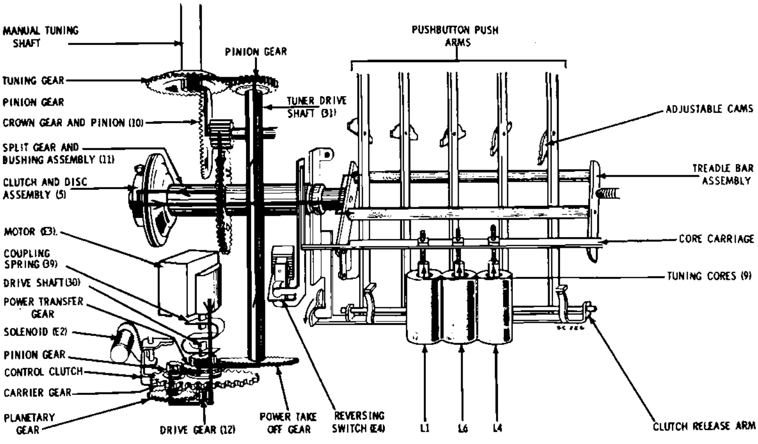

(b)

Fig. 6-36: Further tuner details. Operation of the TREADLE BAR ASSEMBLY is shown at (a), and the set-up for automatic SEARCH TUNING is given at (b).

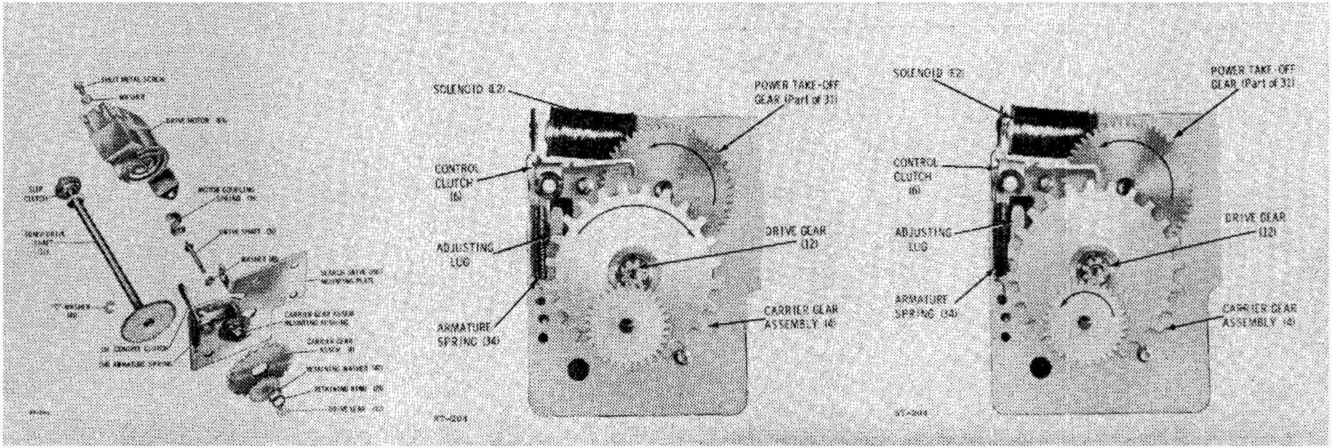

Fig. 6-37: Mechanical tuner details... (a) parts identification, (b) search drive unit with the clutch DISENGAGED, and (c) with the clutch ENGAGED.

their respective coils (L1, L6, and L4). Fig. 6-36(a) is a detail view illustrating the movement of the coil cores at different angles of the treadle bar assembly. With the cores full in, tuning is to the low frequency end of the band; when full out, high frequency stations are tuned. Finally, intermediate frequencies are tuned when the cores are in their middle positions.

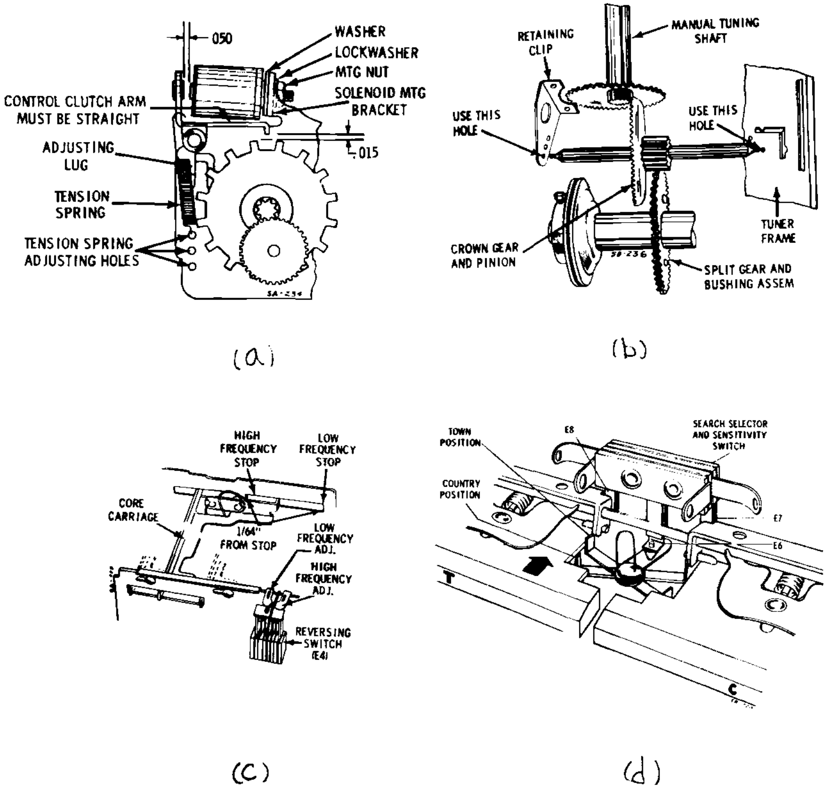

Fig. 6-38: Further mechanical details... (a) control clutch adjustment, (b) crown gear engagement, (c) reversing switch adjustment, and (d) switch operation.

Push-button operation is shown in Fig. 6-35(b). Five push-buttons are provided. Each of these may be set by first tuning in the desired station using the manual tuning knob. This sets the angle of the treadle bar assembly (as described above); next, the push-button to be set is pulled out, unlocking the adjustable cam on the push arm. When the push-button is depressed, the cam is locked to the angle of the treadle bar mechanism and remains in this position until changed. Thereafter, whenever the push-button is depressed, it returns the treadle bar to the cam's preset angle, moving the core carriage either up or down (depending on the treadle bar's position when the button is depressed), and moving the tuning cores to the appropriate position for the station desired.

Search-tuning operation is illustrated in Fig. 6-36(b). Detail views of the various mechanisms involved are given in Figs. 6-37 and 6-38, with a functional diagram of the controlling electronic circuitry given in Fig. 6-39; signal waveforms are detailed in Fig. 6-40. Turning first to Fig. 6-39, note that two search control buttons are provided . . . E7 (COUNTRY) and E8 (TOWN). Both of these operate the search mechanism, with E7 used for tuning weak distant stations and E8 for tuning strong local stations. The essential difference between the two is the operation of switch E6 which, when closed, connects the *Sensitivity* control (R13) to ground through relay E5's "C" contacts, reducing the plate and screen voltages applied to the 1st I.F. amplifier, and thus dropping the receiver's overall sensitivity. The radio operates with reduced sensitivity *only* while "search tuning," however, and returns to full sensitivity once a station is tuned in and the search mechanism stops.

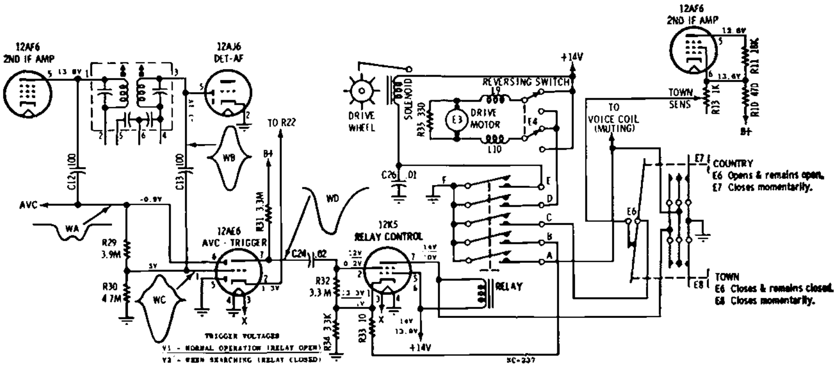

Fig. 6-39: Functional schematic of search tuner operation.

When either search control button is depressed (E7 or E8), the audio is muted and the plate side of the relay is grounded, completing the relay circuit to B–, thus energizing its coil and pulling in contacts "A," "B," "C," "D," and "E," grounding their respective circuits. Contact "A" is connected to the loudspeaker's voice coil and, when grounded, mutes (silences) the audio system. Contact "B" switches R33 across bias resistor R34, reducing the bias on the 12K5 and allowing it to draw sufficient plate current to hold the relay closed even when the search button is released. Contact "C," as we have seen, completes E6's circuit to ground (if E6 is closed), dropping the receiver's sensitivity while "searching." Contact "D" completes the motor (E3) circuit, starting the search mechanism; the motor is connected to a reversing switch (E4) which is actuated by a link on the treadle bar assembly . . . see Fig. 6-36(b) . . . serving to reverse the motor's direction whenever the treadle bar reaches its limit of travel. Thus, the mechanism can "search" in either direction (towards the high or low frequency end of the band) and will reverse automatically if no stations are picked up. Continuing, contact "E" completes the solenoid (E2) circuit, actuating the control clutch and engaging the carrier gear, as shown in Figs. 6-37(b) and 6-37(c). With the carrier gear engaged, the motor can transfer its power to the manual tuning shaft.

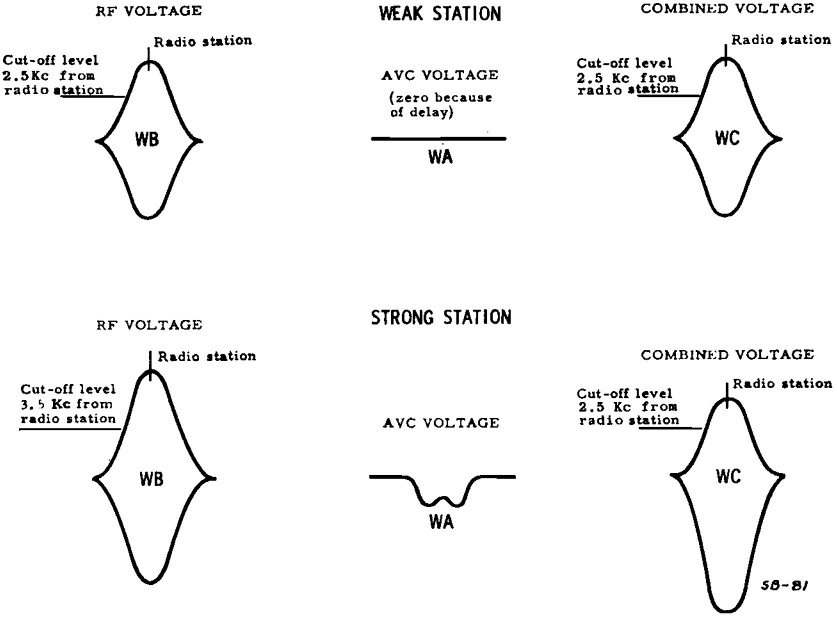

Fig. 6-40: Signal waveforms — refer to Fig. 6-39.

To follow the transfer of motor power to the tuning shaft, refer to Fig. 6-36(b). Torque is applied by the motor (E3) through a coupling spring (39) to the drive shaft (30) and drive gear (12). Power is transferred from here to the planetary gear, from the planetary gear to the pinion gear, from the pinion gear to the power transfer gear, and, finally, from here to the power take off gear attached to the tuner drive shaft (31). The pinion gear at the upper end of the tuner drive shaft couples to the tuning gear of the manual tuning shaft, with the manual tuning shaft's pinion gear, in turn, coupled through the crown gear and pinion (10), split gear and bushing (11), and clutch and disc assembly (5) to the treadle bar mechanism which moves the core carriage and tuning cores. The pinion gear of the tuner drive shaft (31) is secured to the shaft by a slip clutch to prevent damage to the motor in case the tuner is stopped while searching.

As a station is tuned in, a combined signal (WC, Fig. 6-40) is developed at the grid of the trigger tube (12AE6, Fig. 6-39) by the addition of the AVC bias voltage (WA, Fig. 6-40) and the I.F. signal voltage (WB). As the combined signal shifts in a positive-going direction, the trigger tube draws more current through R31, develop-

TROUBLE SHOOTING CHART

This chart covers troubles which may be encountered in servicing the 78MF receiver which are caused by the search-tuning mechanism. These problems are divided into four groups:

1. PRELIMINARY for faulty operation when the power is turned on.
2. ERRATIC OPERATION for faulty operation which causes the tuner to sweep erratically.
3. STARTING for faults which cause the tuner to start improperly.
4. STOPPING for faults which cause the tuner to stop improperly.

TEST	INDICATIONS AND INSTRUCTIONS
1. PRELIMINARY	Check tubes. Connect radio to power source as follows: radio "A" lead to positive side; radio housing to negative side. After warm-up, adjust the input voltage to 14.4 volts. If tuner sweeps when power is turned on, check: 1. Defective search selector switches E-7 & E-8 2. Pins 1 and 7 of 12K5 relay tube for short to ground 3. Switch contacts of relay E-5 defective or dirty 4. Relay E-5 internally shorted If tuner sweeps after warm-up, check: 1. 12K5 relay tube for short to filament or cathode If tuner remains stationary after warm-up, go to TEST 2.
2. STARTING	Disconnect the antenna for the following checks: Check tuner for normal sweep by pressing first the TOWN search button; if sweep is normal, turn receiver off; check for normal sweep by turning receiver on and pressing COUNTRY search button; if tuner sweeps normally after these two tests, go to TEST 4. If tuner sweeps erratically after either search button is pressed, go to TEST 3. If tuner does not sweep after either search button is pressed and the motor does not run, check: 1. Defective search selector switches E-7 & E-8 2. Low B+ at relay E-5 3. Relay E-5 open 4. Contact switches of relay E-5 defective or dirty 5. Defective motor reversing switch E-4 6. Defective motor E-3 7. Motor choke coils L-9 & L-10 open If tuner sweeps but stops the instant either search bar is pressed and released, check: 1. Defective 12K5 relay tube 2. Resistor R-33 defective 3. Pin 2 of the 12K5 relay tube for a short to ground 4. Defective relay E-5 contacts If tuner does not sweep after either search bar is depressed and the motor does run, check: 1. Motor coupling spring (39) jarred off of motor drive shaft or broken 2. Open or weak solenoid E-2 3. Control clutch bent out of shape or out of adjustment 4. Defective or dirty relay contacts If tuner sweeps but pointer movement is jerky, check: 1. Crown gear and pinion defective or disengaged 2. Clutch and disc assembly slipping

TABLE 6-K: SEARCH-TUNER TROUBLESHOOTING CHART — Model 78MF receiver.

ing a negative pulse (WD, Fig. 6-39) which is applied to the relay tube (12K5) through C24. This reduces the relay tube's plate current, allowing the relay to drop out, opening the relay contacts and returning them to their original position. This, in turn, de-energizes the motor (E3) and solenoid (E2). With the solenoid de-energized, the carrier gear dis-engages, allowing the motor to coast to a stop. At the same time, E6's circuit is opened, returning the set to full sensitivity. The "coast distance" of the tuner after the relay is de-energized is approximately 2.5 KC. Therefore, the trigger tube must apply its negative pulse to the relay control tube (12K5) 2.5 KC *before* the tuner reaches the station's center frequency. This is accomplished by the combined action of the AVC bias and I.F. signal voltages,

TROUBLE SHOOTING CHART (Cont.)

TEST	INDICATIONS AND INSTRUCTIONS
3. ERRATIC OPERATION	Disconnect the antenna for the following checks: If tuner sweeps to high end and sticks there when operated with either search button and the motor runs, check: 1. Radio incorrectly connected to the power source (See TEST 1 for proper polarity) 2. Mis-adjustment of motor reversing switch 3. Mechanical binding of tuner 4. Motor incorrectly wired If tuner sweeps to low end and sticks there when operated with either search button and the motor runs, check: 1. Radio incorrectly connected to the power source (See TEST 1 for proper polarity) 2. Mis-adjustment of motor reversing switch 3. Mechanical binding of tuner 4. Motor incorrectly wired If tuner sweeps and sticks at any point midway between either end, check: 1. Tuner for mechanical binding If tuner sweeps exceptionally fast or slow when installed in car, check: 1. Input voltage of radio 2. Mechanical binding
4. STOPPING	Connect antenna and make sure that antenna trimmer is properly adjusted (See Alignment Chart). If tuner sweeps but stops on both strong and weak stations when operated with the TOWN search button, check: 1. Defective sensitivity switch E-6 2. TOWN sensitivity control R-13 misadjusted or shorted (for adjustment, see Alignment Chart). If tuner sweeps normally but stops only on strong stations when operated with the COUNTRY search button, check: 1. Defective sensitivity switch E-6 2. NORMAL sensitivity control R-8 misadjusted or open (for adjustment, see Alignment Chart). 3. Proper adjustment of antenna trimmer 4. Poor or insufficient antenna 5. Defective C-12, C-13 & C-24 6. Defective 12AE6 & 12K5 If tuner sweeps but fails to stop when operated with a search button, check: 1. RF, conv, IF and detector tubes 2. Improper adjustment of antenna trimmer 3. Poor or insufficient antenna 4. Defective coupling capacitors C-12, C-13 & C-24 5. Resistors R-32, R-29 & R-30 6. Low sensitivity 7. Defective 12AE6 Trigger tube 8. Defective 12K5 relay control tube If tuner sweeps normally but stops either before or after the station, check: 1. Input voltage of radio with radio installed in car 2. Sticky relay contacts 3. Sticky control clutch 4. Tension spring of control clutch 5. IF alignment 6. Binding gears in search unit 7. Shorted C-26 8. Defective relay wiring

compensating automatically for differences in picked-up signal levels.

Search tuning mechanisms, like any other electro-mechanical system, can develop a number of service complaints. Because of differences in mechanical layout and in drive and power coupling arrangements, these units are best serviced by following the individual manufacturer's recommendations. For general reference purposes, a Troubleshooting Chart applying specifically to the search tuner used in the Model 78MF receiver is given in Table 6-K.

GENERAL SERVICE NOTES

The following tips and notes, based on practical experience in servicing hybrid car radio receivers, should prove of value by reducing diagnosis and repair time and in helping to avoid common pitfalls . . .

1) **LOUDSPEAKERS** – As a firm rule, *do not* operate transistorized audio amplifier stages *without an adequate load.* Use a test loudspeaker if the receiver's original speaker is not available . . . or, in a pinch, use a "dummy" load – this can be a 10 or 20 watt, 5 ohm resistor. If an audio amplifier is operated without a load, high transient voltages can be developed across the output transformer's primary winding. These voltage "spikes" may exceed the output transistor's maximum rating, *punching* through its junction and ruining the unit.

2) **MODULES** – Many car radios use component *modules.* These are unit assemblies manufactured by an automatic assembly machine and consist of several resistors, capacitors, and similar components. To replace sections of a module which may become defective, use a sharp knife to open the circuit to the defective component, and replace with a standard component having the same electrical characteristics (as specified in the receiver's schematic diagram). If this proves impractical, the entire module may have to be replaced. Obtain these from the receiver manufacturer's local Parts Distributor.

3) **POWER SOURCE** – Several items to watch out for here. First, make sure that your test power source is connected to the receiver with *proper polarity.* In some sets, the *positive* side of the D.C. source may be *grounded* to the chassis . . . in other sets, the *negative* side will be *grounded;* in general, the "ground" arrangement used will depend on the electrical system of the automobile for which the radio is designed. If polarity is accidentally reversed, the set will *not* work and components may be seriously damaged. Second, you'll find it worthwhile to monitor circuit current when you try out the set for the first time; if this runs unusually high, it may indicate a

shorted transistor or an excessively leaky by-pass in the "hot" side of the power circuit. Third, if you operate the set on a line-powered "Battery Eliminator," make sure that the unit is well-filtered and properly regulated. In addition, take care not to apply excessive D.C. operating voltages. When servicing receivers with search tuning mechanisms, an unusually heavy current drain may occur when the "search" mechanism goes into operation (due to currents required for motor and solenoid operation) . . . watch for this, and adjust your power source accordingly.

4) **SET REMOVAL** — Removing (and re-installing) a car radio can be a problem. A good general rule here is to remove the set *only* if absolutely necessary . . . make sure the service complaint is not caused by a faulty antenna connection, "weak" fuse, broken lead, or other defect external to the chassis itself. Since set removal may require as much time as needed for diagnosis and repair (often, *more time* than for actual service), approach this step with caution and forethought. If possible, obtain Manufacturer's Service Manual and Installation Instructions. Otherwise, study set mounting carefully before plunging in. Occasionally, the receiver can be reached most conveniently through the car's glove compartment opening; here, it's necessary to remove the compartment's box first. Finally, turn the set "OFF" and disconnect its "hot" power line *before* probing about with a screwdriver or wrench . . . if you accidentally short an *insulated* heat sink, goodbye transistor!

5) **TRANSISTOR REPLACEMENT** — Several things to watch for here . . .

(a) If you suspect a transistor, a *shorted* or *open* unit can often be checked with an Ohmmeter . . . see Section 10 for details. If you suspect a change in characteristics, the *best* test is to substitute a unit known to be in good condition.

(b) Double-check the transistor mounting arrangement used. Depending on the receiver's design, the transistor's case may be . . . (A) grounded to the receiver's chassis, (B) insulated from its heat sink with a fiber or mica washer, but with the heat sink grounded, or (C) heat sink and transistor *both may be insulated* from chassis. Avoid shorts to chassis in cases (B) and (C). If necessary to replace a transistor in case (B), check the insulating washer for possible cracks or breaks, then recoat the washer liberally on both sides with silicone grease (*General Cement* No. 8101) before installation. Watch for shorts through mounting screws, but make sure these are tight.

(c) Check the *Bias Adjustment* control (if used). This should be set for *minimum* emitter (or collector) current *before* power is applied; often, this will be its highest resistance setting. With the transistor installed, adjust this control in the manner recommended by the set's manufacturer and to the current specified in his Service Manual. *Do not exceed this current.* Often, the bias adjustment will be made either for a specified emitter (or collector) current, or for a specified voltage drop across a series resistor (such as an emitter resistor) in the transistor's circuit. Generally speaking, emitter current is 500 MA (half-amp) *or less* in single-ended stages, 1.0 amps or less in push-pull stages.

6) **TROUBLE ISOLATION** — As mentioned in Section 1, the familiar Circuit Disturbance Test is not too effective in transistor circuits . . . and, in any case, should *not* be applied by "shorting" elements to circuit ground. However, this test can often be used in the *tube stages* of car radios. If a set is "dead," try pulling the audio driver tube (after the set has warmed up for a few minutes) . . . if a noise or "click" is heard in the loudspeaker, the transistor stage is working. Often, a similar indication is given when the set is *first* turned "ON" . . . here, a slight "thump" in the speaker indicates that the transistor is drawing current, since the transistor itself requires no "warm-up" time. An exceptionally heavy "thump" may indicate a leaky or partially shorted transistor.

7) **TUBES** — Low voltage tubes used in hybrid sets . . . the types using 12-volts on their plate and screen grid electrodes . . . may give inconclusive results when checked in conventional Tube Testers. In general, the best test is to substitute a tube known to be in good condition.

8) **OTHER TIPS** — A few other things to watch for . . .

(a) Never ground a transistor's base electrode.

(b) Watch for stray A.C. leakage . . . such as induced currents from a soldering gun's transformer, leakage current between a standard soldering iron's element and its case, and excessively high ripple voltages in Battery Eliminators. As a general rule, *don't* use AC-DC test equipment to check transistorized circuits . . . but, if absolutely necessary, connect an isolation transformer between the test equipment and the power line *before* using. If several pieces of test equipment are being used, and any are line-operated, bond their chassis grounds together with shielding braid or a heavy ground bus and connect to a good earth ground.

(c) If making Signal Injection Tests in transistor circuits, use a small blocking capacitor in series with the "hot" signal lead.

(d) Don't place your transistor stock . . . or your transistorized equipment . . . where it will be exposed to excessive heat. For example, near a radiator, furnace, hot air register, or in a store window exposed to direct sunlight.

TROUBLESHOOTING CHARTS

Applying to all types of hybrid car radios, the Troubleshooting Charts given in Tables 6-L, 6-M, 6-N, and 6-O may be used to help you Pin-Point troubles in minutes. Use these in conjunction with the standard Test Techniques outlined in Section 1, and with the General Service Notes given above. Table 6-L outlines basic Step-by-Step service procedure for hybrid automobile receivers; it is used in con-

STEP	PROCEDURE	REMARKS
1	Confirm complaint – Try set in car; make sure fuse is good, antenna connection secure; if possible, remove and check tubes by substitution; double-check power connection.	Remove radio from car only if trouble is in receiver itself.
2	Bench-check receiver operation – Remove from car, connect to test antenna and metered power source; make sure power supply is normal. If current runs high or fuse blows, check for shorted transistor, then for short in power supply circuit.	
3	Check tubes – Preferably by substitution, as low voltage tubes used in "hybrid" receivers are difficult to check on standard Tube Testers.	Check with tubes of same type known to be in good condition.
4	Isolate trouble to defective stage – If set is "dead," pull first audio amplifier (tube). A click heard in loudspeaker indicates that audio amplifier is good, trouble in R.F.-I.F. stages. If complaint noise or oscillation, try adjusting Volume control; if this affects level of noise (oscillation), trouble is in R.F.-I.F. section; if this affects frequency (pitch) of interfering signal, trouble is overall or in audio section. If complaint is "weak operation," use Signal Tracing or Signal Injection techniques to isolate trouble to specific stage.	See Section 1 for data on service techniques.
5	Troubleshoot defective stage – Do this by checking operating voltages, D.C. resistance of components. With defective part or connection isolated, make necessary repair. Replace defective components, resolder loose connections.	Refer to Tables 6-M, 6-N, 6-O.
6	Check operation – With repairs completed, double-check receiver operation before installing in automobile.	Check alignment if dial doesn't track or if complaint involved tuning difficulties.

TABLE 6-L: GENERAL TROUBLESHOOTING CHART FOR "HYBRID" CAR RADIOS — Follow the procedures outlined here when servicing hybrid car radio receivers, referring to Tables 6-M, 6-N, and 6-O as may be necessary.

junction with the other Tables. Table 6-M outlines complaints which may be caused by defects in the receiver's R.F., converter, and I.F. stages, and indicates which stages to check and possible component defects which may cause the complaints listed. Table 6-N is similar

	CHECK THESE							WATCH FOR THESE DEFECTS											
COMPLAINT	**Antenna Ckt.**	**R.F. Stage(s)**	**Converter**	**Local Osc.**	**I.F. Stage(s)**	**Detector**	**AVC Circuit**	**Defective shielding**	**Poor lead dress**	**Open by-pass capacitor**	**Leaky by-pass capacitor**	**Partially open I.F. transf.**	**Defective tube**	**Part changing value**	**Misalignment**	**Dirty tuning capacitor**	**Loose connection**		
Radio dead		●	*	*	●						●	●	*				●		
Insensitive, weak	●	●	●		*	●					●	●	*		●		●		
Interference	●	●	●		●			*		●					●				
Oscillation, squealing		●	●		*			●	●	*					*				
Noisy as set is tuned		*	*													*			
Noise, hash, "frying"	●	●			●			●	●	●		●	*				●		
Tunes one station only			*	*						●	●		*	●	●	●			
Dial tuning incorrect		●	*	*	*									●	*				
Fading, drift			●	●			●						*	*	●				
Intermittent	*	●	●	●	●	●		●		●	●	●	*	*			*		

TABLE 6-M: TUNING COMPLAINTS TROUBLESHOOTING CHART — Use this chart as a guide if the trouble is in the R.F.-I.F. sections of the receiver or if it involves difficulty in tuning. As in earlier chart, an asterisk (*) is used to identify the more common sources of trouble.

to Table 6-M, but applies specifically to audio section troubles. While only tubes are used in the R.F.-I.F. sections of hybrid car radios, both tubes and transistors may be used in the audio section. Finally, Table 6-O outlines typical service complaints encountered in the transistorized "B" supply circuits used in some sets, and indicates probable component defects.

COMPLAINT / PROBABLE DEFECTS	Open audio transformer	Open grid resistor	Leaky by-pass capacitor	Open by-pass capacitor	Leaky coupling capacitor	Open coupling capacitor	Noisy control	Defective spkr.	Transistor bias	Weak transistor	Leaky transistor	Defective tube	NOTES
Dead	●		●					●			●	*	
Weak			●			●			●	●		*	
Noisy		●		●									
Distorted			●		*			●	●	●	●	*	
Intermittent		●	●			●						*	
Weak and distorted			●			●			*	●		●	
Oscillation, squeals		●		*									
Motorboating		*		*									
Noise with volume control adjustment							*						
Poor frequency response				●		●		●					

TABLE 6-N: AUDIO COMPLAINTS TROUBLESHOOTING CHART — This chart will serve as a guide when the complaint involves the audio section of a hybrid car radio.

PROBABLE DEFECTS → COMPLAINTS ↓	Defective transistor	Defective rectifier	Leaky input capacitor	Open input capacitor	Leaky output capacitor	Open output capacitor	Shorted filter choke (or res.)	Open filter choke (or res.)	Open transformer	Shorted transformer	Defective switch	Loose connection	Scintillating capacitor		
No D.C. output	●	●	*		*			●	●	●	●	●			
Low D.C. output	●	●	*	●	*					●					
Intermittent	●	●		●				●	●	●	●	*			
Overheats	●	●	*		*					●					
Blows fuses	●	●	*		*					●					
Excessive A.C. ripple		●		*		*	●								
Noise in output	●	●		*		*	●				●	●	*		

TABLE 6-O: PPOWER SUPPLY COMPLAINTS TROUBLESHOOTING CHART — Relatively few hybrid auto radios use transistorized power supplies to obtain "B" voltages for operating vacuum tubes. One example is the BENDIX FM Tuner shown in Fig. 6-25. However, where such power supplies are employed, this chart may be used as a guide for the speedy isolation of defects.

Section 7

SERVICING TRANSISTORIZED AUTOMOBILE RADIOS

JUST AS HYBRID portable receivers were manufactured before fully transistorized portables became available in quantity, so did the hybrid car radio precede the fully transistorized set as a production item . . . and for essentially the same reason – the early lack of reliable low-cost R.F. transistors. Today, of course, numerous R.F. transistor types are available from most semiconductor manufacturers and, as a result, the hybrid *portable* is virtually "dead" as a current design. In fact, relatively few of these receivers were manufactured even during its heyday, for its span of life, production-wise, was a fairly short one. Hybrid portables were just reaching reasonable sales levels when the introduction of competitively-priced fully transistorized sets just about killed public demand for hybrid receivers. Consumer demand and acceptance, of course, is the final determining factor in the design of any mass-production item.

However, contrary to what one might conclude from a cursory study, the current situation of the hybrid car radio *does not* parallel that of the hybrid portable, even though fully transistorized automobile receivers are now feasible and have been (and are being) produced by several manufacturers. Thus, the "hybrid" circuit continues to occupy an important position in current car radio designs, and, to date, many more hybrid automobile sets have been produced than fully transistorized types.

This situation is not hard to understand if we recall the basic differences between car radios and portable sets. A portable must be small, light, and economical to operate . . . long battery life is essential. Initial cost, although a competitive factor, is of less importance, for the portable receiver, after all, is basically a "luxury" item. In contrast, the car radio . . . as any Used Car Dealer can testify . . . is often considered a "necessity." Here, size, weight, and power consumption are of less importance as long as these factors are kept within reasonable limits; but initial cost is *very important*. Currently and, in fact, since its introduction, the transistorized automobile receiver is much more expensive than hybrid receivers of comparable performance. When a car manufacturer offers several different receiver models for installation in his products . . . and this is the general rule . . . the transistorized receiver is usually the most expensive "custom-deluxe" model; in some instances, fully transistorized receivers are available as factory-installed accessories in only the more expensive series of cars. This economic factor, then, has heavily influenced the relative popularity of transistorized versus hybrid car sets.

The lower cost of hybrid car radios is due almost entirely to the lower cost of vacuum tubes as compared to transistors, for the other components used in receiver construction . . . coils, resistors, capacitors, etc. . . . carry about the same price tag in both types of sets, and labor costs are about the same. Originally, the cost difference between tubes and transistors would have been more than offset by the need for a relatively expensive high-voltage "B" supply, but this economic advantage of the transistor was wiped out with the introduction of efficient 12-volt vacuum tubes and the general trend of the automobile industry to 12-volt electrical systems. The economic advantage of hybrid circuits remains peculiar to car radios, however, for the power consumption of 12-volt tube designs, while low, is still too high to make these tube types acceptable for portable receivers.

Transistor prices have followed a general downward trend since the first virtually hand-made units were offered at prices ranging from fifty to several hundred dollars *each*. At the same time, transistor specifications have been tightened and their electrical characteristics improved, permitting less critical circuit designs. If we extrapolate current trends, the day is not far distant when the transistor, as an amplifying device, will be less costly than vacuum tubes of comparable performance. When this happens, we can expect a rapid switch-over, at the manufacturing level, to fully transistorized designs. On the other hand, it is possible that new tube designs will be introduced . . . such as the recently developed *cold-cathode* tube . . . which could halt or even reverse this trend. A more remote possibility is that some totally new amplifying device with characteristics superior to both vacuum tubes and semiconductors will be invented and produced at prices competitive with both.

At first glance, it would appear that a car radio could be designed using the same general type of circuits employed in transistorized portable receivers. Basically, this is true, but the practical operating conditions to which the car radio is exposed necessitates more refined designs. As we have seen (Section 6), a car radio, in general, must deliver more audio output power than a portable set. Further, since the car radio is operated in close proximity to many sources of electrical interference . . . ignition hash, generator noise, road static, etc. . . . much better shielding and greater selectivity are required. The first is achieved by improved mechanical layout and construction and by the use of adequate line filters and shielding; the second by careful circuit design. In addition, the shielding and loading effect of the car's metal body may require higher sensitivity (more gain) is a car set. Finally, the public has become accustomed to many "accessory" features in car radios which it does not demand in portable or table-model sets, such as push-button and signal-seeking tuning arrangements, dual loudspeakers (for front and rear seats), fancier trim, and a layout which permits in-dash "built-in" installation. All of these factors influence transistorized car receiver design and, in general, tend to make car radios more complex and expensive than portable or home sets.

From a practical servicing viewpoint, transistorized car radios may be tackled using a combination of the techniques found effective in troubleshooting portable receivers and hybrid automobile sets, as discussed in Sections 5 and 6, respectively. The same general types of defects are encountered and these cause similar service complaints. Similar test methods may be employed. Care must be taken, of course, to distinguish between semi-mechanical trouble in tuning mechanisms and signal-seeking devices and defects in the unit's actual receiver circuits. Often, this can be done by examining the nature of the customer's "complaint," or, if the complaint is a vague . . . *doesn't work* . . . by a simple preliminary check of the set's overall performance on *manual tuning.* If normal operation is obtained as the tuning knob is adjusted, but the set doesn't work when a station-selector push-button is depressed, the defect is probably mechanical, and can be found by carefully examining the operation of the push-button mechanism. By the same token, if normal performance is obtained on both manual and push-button tuning, but the radio works improperly when a "search-tuning" bar (or button) is actuated, the trouble is probably in the electromechanical signal-seeking device *or* in the trigger or relay circuits which control this mechanism.

TYPICAL CIRCUIT OPERATION

The schematic wiring diagram of Delco Radio's Model 7268085 car radio receiver is given in Fig. 7-1. Designed for installation in 1957 Cadillac Brougham automobiles, this receiver is the first fully transistorized set produced by one of the nation's largest car radio manufacturers and, since it incorporates such features as an R.F. stage, push-pull audio output, and semi-automatic signal-seeking as

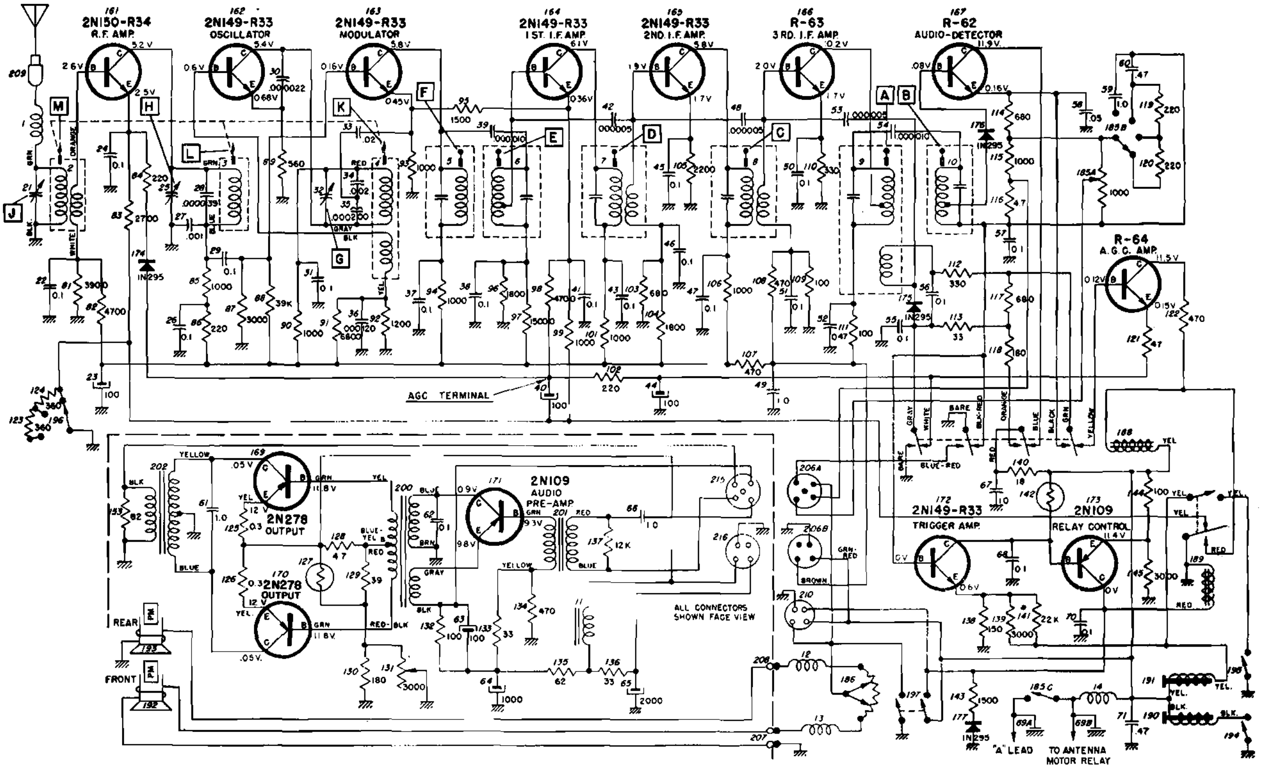

Voltages measured terminal to chassis with a VTVM—No signal and 12.0 volts at Illus. 69A—Tuner stopped.
Total "A" drain on sets before serial #HD 80 - .350 amps.
Total "A" drain on sets after serial #HD 80 - 2 amps.

Fig. 7-1: Schematic wiring diagram of the DELCO Model 7268085 automobile radio. This was the first fully transistorized car radio and typifies advanced transistor receiver design.

well as conventional push-button and manual tuning, may be considered as a basic or *prototype* design. Many later model receivers are simplified adaptations or slightly modified versions of this set . . . just as we found, in Section 5, that later transistorized portable receivers used converter, I.F., detector, and audio circuits very similar to those found in the first fully transistorized portable, Regency's famous TR-1. An understanding of the Model 7268085's circuit, then, can serve as a firm foundation for the practical analysis of the circuits found in any transistorized car radios which the service technician may encounter in his work.

Using thirteen transistors, the Model 7268085 was manufactured in two versions. These can be identified by their serial Numbers, with the sets carrying serial designations before No. HD 80 using one circuit, and those sets carrying serial Nos. after HD 80 using a slightly modified circuit. The chief differences between the two versions are found in the audio power amplifier which, in both sets, is assembled on a separate chassis. The schematic diagram of the audio amplifier used in later model sets is given in Fig. 7-2.

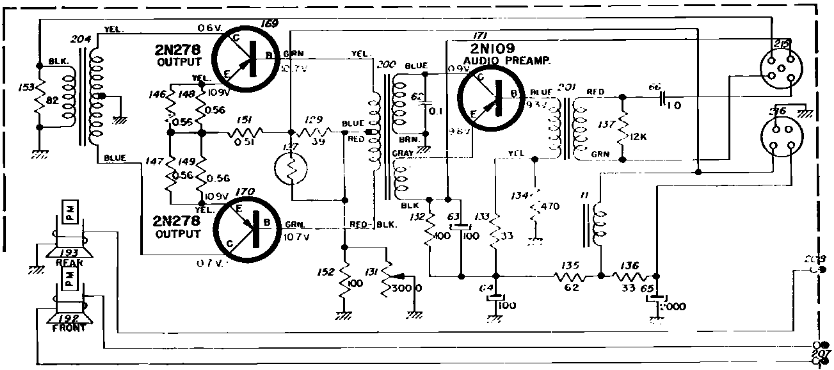

Fig. 7-2: A slightly modified audio amplifier was used in later production runs of the Model 7268085 receiver. This circuit applies to receivers after Serial No. HD80.

We'll discuss circuit differences a little later in this Section. Both versions tune the AM Broadcast-Band from 540 to 1600 KC, and both use an I.F. of 262 KC. Overall sensitivity, in both, is approximately 1 to 3 microvolts for an audio output of 1 watt. Maximum power output is on the order of 10 watts, delivered to a pair of 6″ x 9″ oval PM loudspeakers. Power requirements are 0.350 amperes (350 milliamperes) at 12.0 volts D.C. for the earlier version, and 2.0 amperes at the same voltage for later units. An interesting "accessory feature" of this receiver is an automatic antenna, which extends when the set is turned on and retracts completely when the radio is switched off; this is achieved by the use of a separate antenna relay and control motor operated by the set's regular "ON-OFF" switch (part 185C, Fig. 7-1).

Referring to the schematic diagram, we find that *NPN* transistors are used in all but the relay control, audio pre-amp, and power output stages; here, *PNP* units are found. In addition to the transistors, four semiconductor diodes are employed. The common-emitter configuration is used in all but the audio-detector (part 167, Fig. 7-1) and AGC* amplifier stages, with the common-collector arrangement used here. Low and medium power (milliwatt) transistors are used in all but the power output stage, where multi-watt types are installed; type 2N278, used here, has a maximum collector dissipation rating of 55 watts. A variable inductance tuning arrangement is used, with the movable ferrite cores of the antenna, R.F., and local oscillator coils ganged mechanically.

In operation, R.F. signals picked up by the antenna are coupled through a shielded lead, antenna connector 209 and loading coil 1 to antenna transformer 2; this unit's primary is tuned by its ferrite core and shunt trimmer capacitor 21. A step-down secondary winding is used to couple the antenna signal to the base-emitter circuit of the R.F. amp. (part 161), assuring a good match between the high impedance of the tuned circuit and the transistor's moderate input impedance; this arrangement, of course, minimizes circuit loading, insures high "Q," and thus permits good selectivity in the tuned circuit. R.F. amplifier base bias current is furnished through a voltage divider made up of resistors 81 and 82, bypassed by capacitor 22. A variable emitter bias is used, obtained from the AGC circuit and applied through delay diode 174 and a voltage divider made up of resistors 84, 83, 124, and 123, with the last three resistors bypassed by capacitor 24; resistors 123 and 124 may be switched in and out of the circuit as a control over set gain by *Sensitivity* switch 196. The amplified R.F. signal delivered by the first stage is further selected by R.F. coil 3, tuned by its ferrite core and a shunt capacity network made up of fixed capacitor 28, trimmer 25, and padder 27. The output signal appearing across load resistor 85 is coupled through capacitor 29 to the base of the modulator or mixer stage (part 163). Collector bias is furnished through decoupling resistor 86, bypassed by capacitor 26.

The separate local oscillator (part 162) employs the familiar tuned collector-base feedback circuit arrangement. Oscillator frequency is determined by collector coil 4, tuned by its ferrite core and by a shunt capacity network made up fixed capacitor 34, temperature compensating capacitor 35, and trimmer 32. Capacitors 34 and 35

---

*NOTE—The terms AGC (Automatic Gain Control) and AVC (Automatic Volume Control) are often used interchangeably.

form a capacitive voltage-dividing and impedance matching network, injecting the oscillator's output signal into the mixer's emitter circuit through capacitor 33. Oscillator collector current is supplied through decoupling resistor 90, bypassed by capacitor 31. The feedback necessary to start and maintain oscillation is furnished to the base-emitter circuit by a small coil coupled to collector coil 4, with base bias furnished through a voltage-divider made up of resistors 91 and 92, bypassed by capacitor 36, working in conjunction with emitter resistor 89. The emitter resistor is not bypassed as an aid to circuit stabilization. Frequency stabilization is assisted by capacitor 30, connected between the transistor's emitter and collector electrodes; this capacitor loads the interlectrode capacity of the transistor, thus reducing the latter's effect on operating frequency.

In the modulator stage (part 163), the selected R.F. and locally generated signals are combined to form the 262 KC I.F. signal. This signal is amplified and selected by the modulator's collector load, a tuned circuit made up of coil 5 and a small shunt capacitor; coil 5 is tuned by an adjustable ferrite core. Modulator base bias current is obtained through a voltage divider made up of resistors 87 and 88. A variable emitter bias is used to obtain AGC action in this stage; the emitter bias is supplied through resistor 95, appearing across emitter resistor 93. Resistor 95, as we observe, is coupled back to the 1st I.F. amplifier's emitter circuit which, in turn, receives its variable emitter bias from the AGC circuit through a voltage divider made up of resistors 98 and 99, bypassed by capacitor 41. The selected and amplified I.F. signal is coupled through capacitor 39 to the 1st I.F. amplifier's tuned base circuit.

Shielded coil 6, tuned by its ferrite core and a small fixed shunt capacitor, serves as the 1st I.F. stage's input circuit. A tap on this coil matches the high impedance of the tuned circuit to the transistor's low base-emitter impedance, minimizing tuned circuit loading and assuring good selectivity. Base bias is furnished through a voltage divider made up of resistors 96 and 97, bypassed by capacitor 38. As we have seen (above) a variable emitter bias is used to obtain AGC action. The tuned primary winding of I.F. inter-stage transformer 7 serves as the 1st I.F. amplifier's collector load, with the amplified signal appearing here inductively coupled to an untuned step-down secondary winding which, in turn, feeds a signal to the 2nd I.F. amplifier. Collector bias current is obtained through decoupling resistor 101, bypassed by capacitor 43. Stage neutralization is provided by the feedback signal obtained from the I.F. transformer's secondary and coupled back to the stage's base circuit through feedback capacitor 42.

Operated without AGC, the 2nd I.F. amplifier receives its input signal from transformer 7's secondary winding. Base bias is furnished by a voltage divider made up of resistors 103 and 104, bypassed by capacitor 46, with bias stabilization insured by emitter resistor 105, bypassed by capacitor 45. The tuned primary circuit of interstage I.F. transformer 8 serves as the stage's collector load and this, in turn, is inductively coupled to the untuned step-down secondary winding which drives the 3rd I.F. amplifier. Collector current is supplied through resistor 106, bypassed by capacitor 47. Stage neutralization is provided by capacitor 48. Resistor 107 and capacitor 23 form a decoupling network in the emitter and base bias supply bus for the first four stages and local oscillator.

Like the 2nd I.F. amplifier, the 3rd I.F. stage (part 166) is operated without AGC. It receives its input signal from transformer 8's untuned secondary winding and supplies its output to the tuned primary winding of I.F. transformer 9. Base bias current is furnished through a voltage divider made up of resistors 108 and 109, bypassed by capacitor 51. Emitter resistor 110, bypassed by capacitor 50, helps stabilize stage bias. Collector current is furnished through decoupling resistor 111, bypassed by capacitor 52. Stage neutralization is assured by capacitor 53, connected between the stage's base electrode and the output I.F. transformer's (9) secondary winding. The transformer's (9) primary is tapped to provide a good match between the moderate output impedance of the transistor's collector circuit and the high impedance of the tuned circuit, thus maintaining high "Q" and good selectivity.

Two outputs are obtained from the 3rd I.F. amplifier. One is supplied through inductive coupling between the output transformer's (9) tuned primary and untuned secondary windings. This signal is applied to AGC diode 175, which serves to rectify the signal and to develop an AGC D.C. control bias with a value proportional to the amplitude of the I.F. signal . . . and hence to the amplitude of the original R.F. signal picked up by the antenna. The AGC diode's output, filtered by capacitors 55 and 56, is developed across a voltage-divider made up of resistors 112, 113 and 117, serving as a diode load. From here, the D.C. control signal is applied through contacts on the search-tuning mechanism's relay 188 to a direct-coupled common-collector AGC amplifier. The amplified AGC control signal, in turn, is applied through emitter resistor 121, bypassed by capacitor 44, and through decoupling resistor 102, bypassed by capacitor 40, as a variable emitter bias on the R.F. amplifier, modulator (mixer), and 1st I.F. amplifier stages. A slight "delay" in the application of AGC control to the R.F. amplifier is achieved by the use of series diode 174. In practice, the AGC control signal must build up to the point where it exceeds the fixed bias developed across the R.F. stage's emitter resistors *before* AGC can be applied to this stage; at levels below this value, the diode (174) is biased by emitter voltage in its high resistance (or non-conducting) direction. This permits the R.F. amplifier to work at optimum (maximum gain) bias levels for weak input signals. When a very strong signal is received, however, AGC bias can be applied to the stage and, in some cases, may become strong enough to "cut-off" collector current. When this happens, the R.F. amplifier stops working as an "amplifier" and the R.F. signal is transferred from its input (base) to its output (collector) circuit only through the transistor's interelectrode capacities.

Returning to the 3rd I.F. amplifier, its *second* output is obtained directly from the I.F. transformer's (9) tuned primary winding through capacitor 54 and is applied to the 2nd detector's tuned input circuit, coil 10. This coil is tuned by its ferrite core and by a small fixed shunt capacitor, and is tapped to provide an output signal to the 2nd detector, made up of diode 176 and a common-collector detector-amplifier (part 167). This stage, as is characteristic of common-collector amplifiers (see Section 10), has a high input impedance and thus presents minimum loading to the tuned circuit, insuring good selectivity. The demodulated (audio) signal appears across the collector load, made up of resistors 114, 115, and 116, with the latter two shunted by *Volume* control 185A; capacitors 57 and 58 serve as I.F. bypass units. A switch type *Tone* control circuit is used; this is shunted across the Volume control, and is made up of selector switch 185B, resistor 119 and 120, and capacitors 59 and 60. As different R-C combinations are switched across the Volume control by 185B, more (or less) of the higher frequency audio signals are bypassed, thus altering the receiver's overall audio frequency response.

From the Volume control (185A), the audio signal is connected to the audio amplifier chassis through plug and jack combination 206A-215, and is applied to the primary winding of interstage transformer 201 through D.C. blocking capacitor 66. The transformer's primary winding is shunted by load resistor 137. The audio signal appearing across 201's secondary is applied to the audio pre-amp's (171) base-emitter circuit, with this stage's amplified output signal developed across its collector load, the primary winding of driver transformer 200. A small bypass capacitor, 62, serves as a shunt for higher frequency audio components which may be introduced by harmonic distortion. Pre-amp base bias is furnished through a voltage divider made up of resistors 133 and 134 working in conjunction with emitter resistor 132, bypassed by capacitor 63. A small feedback winding on driver transformer 200 is connected in series with the pre-amp's emitter electrode and serves to introduce degenerative (inverse) feedback, stabilizing stage operation and reducing distortion.

The driver transformer (200) applies a signal to the push-pull output power amplifier through its center-tapped secondary winding. This stage consists of two *PNP* power transistors operated as a Class

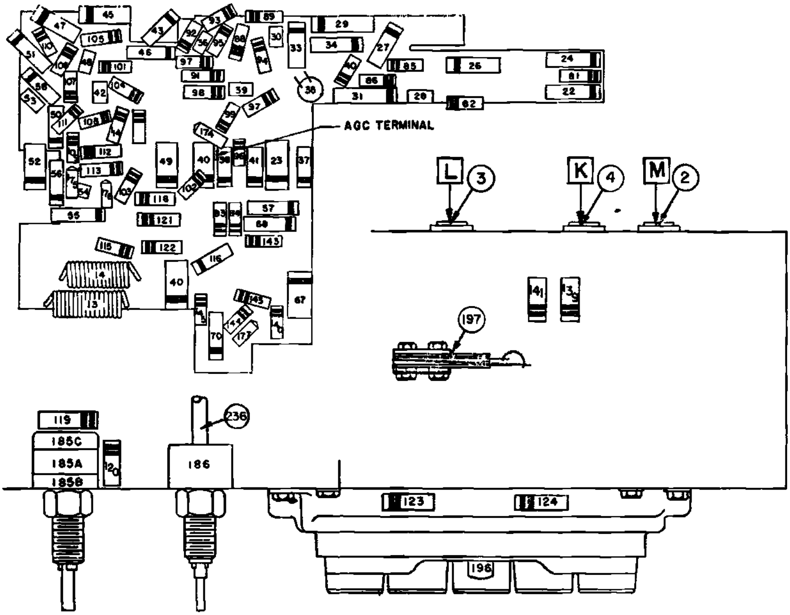

PARTS LAYOUT—CHASSIS VIEW

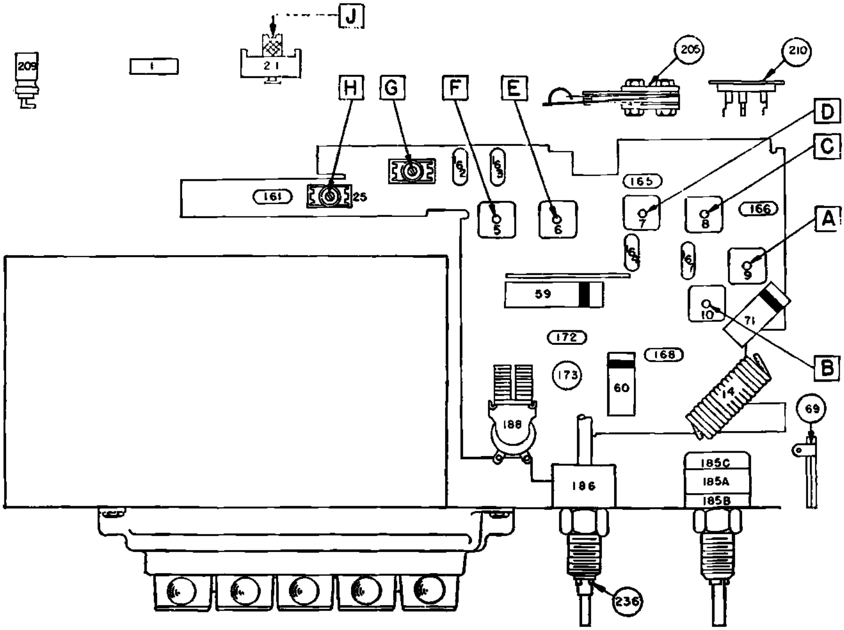

PARTS LAYOUT

Fig. 7-3: Parts layout diagram for the Model 7268085 receiver. Alignment adjustments are identified.

B common-emitter amplifier. Base bias is supplied through a resistive network including resistors 128, 129 and 130, temperature-compensating *thermistor* 127, and *Bias Adjustment* control 131. Unbypassed emitter resistors 125 and 126 serve to stabilize and balance stage operation. The push-pull amplifier's output is coupled to its loudspeaker load through impedance matching transformer 202. Bypass capacitor 61, connected across the output transformer's primary winding, serves to bypass high frequency signal components, further reducing the effects of harmonic distortion. A fixed resistor, part 153, is connected across 202's secondary as a permanent load, preventing the operation of the power amplifier without a load in the event the two loudspeakers were disconnected. This guards against transistor damage due to the transient voltage spikes which can develop in unloaded output amplifier circuits.

Later versions of the Model 7268085 receiver used the audio amplifier circuit shown in Fig. 7-2. A comparison of this circuit with that given in Fig. 7-1 reveals that the major change is in the power amplifier's biasing network, with a greater bias current used in the later version, shifting the amplifier from Class B towards Class A operation. This, in turn, required a change to a different output transformer. In addition, since a Class A amplifier has less inherent distortion than a Class B (or Class AB) stage, it became possible to omit the power amplifier's collector bypass capacitor (part 61, Fig. 7-1). One other change in circuit operation took place . . . a Class B amplifier draws little or no collector current when "idling" under zero signal conditions (see Section 10), but a Class A stage requires an appreciable current. Thus, earlier versions of the receiver (using a Class B power amplifier) required only 0.350 amperes for operation under zero signal conditions, while later versions (using a Class A power stage) require 2.0 amperes under the same conditions.

Returning to Fig. 7-1, the operation of the signal-seeking mechanism is essentially like similar units used in tube-operated receivers, but with the trigger amplifier and relay control tubes replaced with transistors handling the same functions. The transistor circuit used here is of particular interest, however, in that the complementary characteristics of *NPN* (part 172) and *PNP* (part 173) transistors are used to permit direct-coupling between stages. As may be recalled, a similar circuit arrangement was used as a direct-coupled audio amplifier in the GE Model 675 portable receiver (see Section 5, Fig. 5-12).

ALIGNMENT. The Model 7268085 receiver may be aligned using a standard R.F. Signal Generator and VTVM. A battery-operated VTVM is preferred, if available. The general precautions outlined in Section 1 referring to the use of line-operated equipment should be observed. The location of Alignment adjustments are indicated in the

STEP	DUMMY ANTENNA*	SIGNAL GENERATOR CONNECTION**	GENERATOR FREQUENCY	RECEIVER TUNING	OUTPUT METER	ADJUSTMENT IN ORDER FOR INDICATED READING
1	Direct	Base of 3rd I.F. amplifier.	262 KC	H.F. Stop***	Connect VTVM from AGC Terminal to chassis. Use 3.0 volt max. reading, adjusting Signal Generator output as necessary.	A (Maximum)
2	Direct	Base of 3rd I.F. amplifier.	262 KC	H.F. Stop***		B (Minimum)
3	Direct	Base terminal of modulator.	262 KC	H.F. Stop***		C, D, E, F, (All for Maximum)
4	.000082 Mfd.	Antenna Connect.	1615 KC	H.F. Stop***		G, H, J**** (All for Maximum)
5	.000082 Mfd.	Antenna Connect.	600 KC	600 KC		L, M (Maximum)
6	.000082 Mfd.	Antenna Connect.	1615 KC	1615 KC		H, J (Maximum)
7	.000082 Mfd.	Antenna Connect.	900 KC	Pointer calibration adjustment – tune set for maximum output, and adjust pointer to 900 KC.		
8	None	With radio installed and car antenna plugged in, tune to weak station between 600 and 1000 KC, then adjust antenna trimmer "G" for maximum volume.				

NOTES: *Dummy antenna in series with "hot" Signal Generator lead.

**Signal Generator "ground" lead must be very short; returns to chassis.

***To tune to H.F. Stop, insert piece of #25 bare wire in slot against high frequency stop, then depress station selector bar and allow arm to run against this wire. Turn radio off, then on again.

****Before adjusting, check setting of oscillator core "H." The rear of the core should be 1-5/8" from the mounting end of the coil form. Make this measurement by inserting a small dowel or plug in the mounting end of the form. The core adjustment is made with a non-magnetic screwdriver. Antenna and R.F. cores should be at least as far from the mounting end of their coil forms as the oscillator core.

TABLE 7-A: Alignment data for the receiver shown in Fig. 7-1. Refer to Fig. 7-3 for adjustment location.

chassis layout diagrams given in Fig. 7-3. Detailed Alignment procedure, including equipment connections, frequency settings, and order of adjustment is outlined in Table 7-A. Note that the primary of the 4th I.F. coil (part 9, Fig. 7-1) is aligned *first*. Before starting Alignment, the receiver's *Volume* control should be set to maximum output, the *Sensitivity* switch for maximum gain, and the *Tone* control to its Treble position. During Alignment, the receiver's AGC voltage (used as an output indication) should not be allowed to exceed 3.0 volts, with the Signal Generator's *Output* or *Level* control readjusted as often as necessary to stay within this value.

OTHER CAR RADIOS

The Delco receiver we have examined in detail represents just about the most complex design encountered in day-to-day service work, and a good understanding of this set will make the practical analysis of other receivers a relatively simple task. Generally speaking, the typical transistorized automobile radio will employ a simplified and slightly modified version of the schematic given in Fig. 7-1, and, often, will use a circuit only slightly more complex than those found in common six and seven-transistor portable sets. Search-tuning mechanisms, for example, are used only in the more expensive "deluxe" receiver designs. Most sets use a two-stage (rather than three) I.F. amplifier, and rely on a single transistor converter rather than separate local oscillator and mixer units. Of course, either *NPN* or *PNP* transistors may be used, depending on the preferences of the individual manufacturer. For example, the Motorola GV-800 receiver, a "universal" set designed for installation in many types of automobiles, uses 8 *PNP transistors;* its circuit includes a R.F. amplifier, a standard converter, two I.F. amplifiers, a diode-type 2nd detector, an audio preamplifier, an audio driver stage, and a push-pull output stage using a pair of power transistors. Another common departure from the circuit we examined is the use of a single-ended rather than push-pull output stage; here, the circuits used are similar to those found in hybrid automobile sets (as discussed in Section 6).

There is one other type of car radio which is unique to transistorized designs . . . the combination "portable" and built-in automobile receiver. As of this writing, relatively few of these sets have been distributed, but this general design is growing in popularity. A typical instrument in this class consists of two semi-independent components . . . (a) a permanently installed chassis in the automobile, and (b) a removable self-contained portable receiver. Generally speaking, the set's "built-in" chassis is basically a mounting rack for the separate portable radio, but includes a multiple-contact plug, a large PM loudspeaker, and a "booster" power amplifier, plus appropriate line filters (choke coils and spark-plate capacitors) to permit power to be drawn from the car's electrical system. In addition, a conventional antenna is mounted in the car. The removable unit is a complete portable radio, including a built-in antenna "loop," self-contained battery power pack, and its own miniature loudspeaker. Its overall construction differs little from that of good quality more conventional portables; it is better shielded, of course, and is equipped with a multiple-contact socket-switch.

In operation, the portable set is used like any standard receiver when removed from its mounting rack. When installed in the automobile, however, the receiver's multiple-contact socket-switch and the mounting rack's corresponding plug interlock, automatically switching a number of receiver circuits, as follows:

1) The receiver's miniature loudspeaker is disconnected, with the set's medium power "output" amplifier connected to serve as a "driver" for the higher-powered booster amplifier permanently installed in the car. This, in turn, drives a larger PM loudspeaker.
2) The receiver's built-in "loop" antenna is disconnected, with the car's permanently installed "whip" antenna connected in its place. At the same time, an appropriate tuned circuit is substituted for the "loop" coil.
3) The receiver's self-contained battery power pack is disconnected and power is supplied (through appropriate filters) from the car's electrical system. At the same time, an R-C network may be switched into the receiver's bias supply bus to compensate for any differences in supply voltage; in some cases, for example, the battery power pack used in the "portable" supplies less voltage than the car's electrical system.
4) A dial (pilot) lamp may be connected. Generally, these are not used in portable receivers due to their high current requirements, but are a necessity in automobile sets.
5) One or more special "control" circuits may be added to the receiver's basic operating circuit. For example, a simple *Tone* control.

Circuit-wise, the "portable" part of a combination receiver is virtually identical to conventional portables, while the built-in power amplifier is essentially a duplicate of the output amplifier found in hybrid car radios. The Delco Radio Model 988837 receiver is a typical example of this type of construction. Designed for installation in 1958 Pontiac automobiles, this set is a combination unit. The "portable" receiver itself includes a R.F. stage, mixer, separate local oscillator, two I.F. amplifiers, a diode-type 2nd detector, a diode AVC rectifier, an AVC amplifier, an audio driver, and a push-pull power output stage, plus a built-in 3″ PM loudspeaker and its own self-contained 6-volt power pack made up of four penlight cells (or equivalent mercury cells) connected in series. *NPN* transistors are used in all but the audio stages, with *PNP* units used here. Except for the AVC amplifier, which is wired in the common-collector arrangement, the common-emitter configuration is used throughout. The separate "booster" amplifier wired as part of the receiver's permanently installed "mounting rack" uses a *PNP* power transistor as a single-ended Class A amplifier driving a 6″ x 9″ oval PM loudspeaker through a standard impedance-matching auto-transformer. The "mounting rack" also includes a *Tone* control circuit, automatically connected into the set's audio system when the receiver is mounted in the rack. When operating on its self-contained batteries, the receiver requires an operating (no signal) current of 6.0 MA at 6.0 volts, D.C. When used in the car and plugged into its mounting rack, the set draws 1.2 amperes at 12.6 volts. The higher current requirement in the latter case is due in part to the power needs of the power transistor booster amplifier, and in part to the power needs of current drawn by the set's dial light (which is not used with the receiver out of the car). Using an I.F. of 262 KC, this set tunes the standard AM Broadcast-Band from 550 to 1600 KC.

As far as servicing is concerned, the "portable" part of a combination receiver may be handled like any standard portable, using the techniques outlined in Section 5. The "booster" amplifier may be serviced using the methods applied to the power output stages of hybrid car radios, as discussed in Section 6. In general, combination receivers are much *easier* to repair than more conventional car radios, for they are much easier to remove (and to re-install).

GENERAL SERVICE NOTES

Since transistorized automobile radio receivers, in general, represent a combination of the circuits used in conventional portable sets with the construction techniques and special circuits peculiar to auto radios (such as signal-seeking tuners), the *General Service Notes* found in *Sections 5 and 6* will be found useful. In addition, the following notes should be of help . . .

1) **CABLES** — Where a receiver consists of two or more separate units, interconnected with multiple-conductor cables, these cables should be checked whenever the set is inspected or serviced. They are particularly suspect in the case of "intermittent" complaints. A good check, here, is to try wriggling the cables while the radio is operating. If an intermittent complaint can be made to "come and go" as a particular lead or cable is moved, there may be an intermittent short or open, or poor plug and socket connection.

STEP	TEST PROCEDURE
1	Confirm complaint – Check receiver's operation in car. Make sure line fuse is O.K., that adequate power is available, that antenna connection is secure. When sure defect is in receiver itself, remove for bench tests.
2	Bench-test receiver – Connect to metered and fused test power supply (battery or line-operated supply), turn ON and check current drain. (a) If normal, go to Step 3. (b) If excessive, or if line fuse blows, check for short in line, including line filter capacitors (67, 71, Fig. 7-1).
3	Operational check – Connect antenna, turn sensitivity control to maximum. Depress Wonder Bar and start tuner searching. If line-operated supply is used for test instead of storage battery, adjust to 16.0 volts before depressing Wonder Bar. (a) If tuner stops at station points normally received in your area (even though no sound may be heard in loudspeaker), trouble is in audio stages. Refer to Table 7-C. (b) If tuner fails to stop, or stops on fewer stations than normal, go to Step 4. (c) If tuner fails to start, automatic tuning mechanism is at fault.
4	Preliminary isolation test – Disconnect antenna; turn Volume control to maximum. (a) If nothing is heard, leave control at maximum. Go to Step 5. (b) If a hissing sound is heard, trouble is probably in oscillator stage, R.F. stage, or antenna circuit. Take the antenna lead and touch to the base electrode of the mixer (163, Fig. 7-1). (1) If noise is heard, but no signals can be picked up on manual tuning, check the oscillator stage. (2) If signals can be heard with antenna or mixer base, move antenna back to base electrode of R.F. stage (161, Fig. 7-1). If signals are weaker or absent, R.F. stage is defective. (3) If signals can be heard with antenna at R.F. stage base, move antenna lead back to antenna connector. If signals are weaker or absent, trouble is in antenna circuit or input transformer.
5	Isolation tests – Use a standard R.F. Signal Generator to obtain a modulated R.F. signal at 262 KC and apply through a 0.1 Mfd. capacitor to base electrode of audio-detector stage (167, Fig. 7-1). (a) If no signal is heard, trouble is in audio stages. Refer to Table 7-C. (b) If a signal is heard, leave Signal Generator controls set at a level which produces a moderate output and go to Step 6.
6	Check 3rd I.F. stage – Transfer the Signal Generator lead (and series capacitor) to the base electrode of the 3rd I.F. amplifier (166, Fig. 7-1). Compare the output with that obtained in Step 5(b). (a) If output is approximately the same, adjust Signal Generator's Level control until signal can just be heard in loudspeaker, then go to Step 7. (b) If output is reduced or absent, check 3rd I.F. stage and input to audio-detector (167, Fig. 7-1).

Continued on next page

TABLE 7-B: GENERAL TROUBLESHOOTING CHART. This chart outlines the basic test procedure to follow when servicing the Model 7268085 receiver. The basic techniques described may be applied to ANY transistorized car radio, however.

STEP	TEST PROCEDURE
7	Check 2nd I.F. stage – Transfer Signal Generator lead (and series capacitor) to base electrode of 2nd I.F. amplifier (165, Fig. 7-1) and compare output to that obtained in Step 6(a). (a) If output is much greater, readjust Level control until signal can just be heard and go to Step 8. (b) If output from loudspeaker fails to increase or is absent, check 2nd I.F. stage, including the I.F. transformer between the 2nd and 3rd stages.
8	Check 1st I.F. stage – Transfer Signal Generator lead (and series capacitor) to base electrode of 1st I.F. amplifier (164, Fig. 7-1) and compare output to that obtained in Step 7(a). (a) If output is increased, readjust Level control until signal can just be heard and go to Step 9. (b) If there is no increase in output, check the 1st I.F. amplifier, including the I.F. transformer between 1st and 2nd stages.
9	Check mixer (modulator) stage – Transfer the Signal Generator lead (and series capacitor) to the base electrode of the mixer stage (163, Fig. 7-1). Compare the loudspeaker's output with that obtained in Step 8(a). (a) If output is greater, readjust Level control until signal can barely be heard and go to Step 10. (b) If there is no increase in output, check the mixer stage including the I.F. transformer between the mixer and 1st I.F. amplifier.
10	Check local oscillator –Readjust Signal Generator to supply a modulated R.F. signal at a frequency corresponding to the receiver's dial setting. With the generator's output lead applied through a 1.0 Mfd. series capacitor to the base electrode of the mixer (163, Fig. 7-1), "rock" the generator's dial slightly until a signal is obtained, and compare its output to that obtained in Step 9(a). (a) If output is approximately the same, the oscillator is working. Go to Step 11. (b) If there is no output, check the local oscillator. Connect a VTVM to the emitter electrode of the mixer (and ground) and set on its lowest range. Pull the oscillator transistor from its socket (162, Fig. 7-1). If emitter voltage reading drops, the oscillator is working. If voltage remains unchanged, oscillator is not workworking.
11	Check R.F. stage – Transfer Signal Generator lead (and series capacitor) to base electrode of R.F. amplifier (161, Fig. 7-1) and compare the output to that obtained in Step 10. Readjust Signal Generator frequency slightly if necessary. (a) If output is approximately the same, check the antenna circuit. (b) If output is considerably weaker or not present, check the R.F. stage.

2) **CONNECTORS** – "Combination" receivers use multiple-contact connectors (sockets and plugs) between the receiver proper and its built-in mounting rack in the automobile. If the set works properly *out of its rack,* but doesn't work *when installed,* first check the line fuse, then look for trouble in the connector. Typical defects are dirty contacts and weak or bent contact springs. Defective connectors may cause a variety of service complaints, ranging from "dead" to "weak," "noisy," or "intermittent."

3) **CURRENTS** – As in servicing hybrid auto radios, a preliminary check of the receiver's current requirements is a good idea, and will help to identify serious defects, such as a shorted transistor or filter (bypass) capacitor. Care must be taken when interpreting current readings, however, due to the widely varying current requirements of fully transistorized car radios. In general, if the receiver uses Class B power output amplifiers, its current requirements will be but a fraction of an ampere . . . perhaps as low as a tenth of an amp (or 100 MA) if pilot and dial lamp currents are ignored. If a Class A power amplifier is used, on the other hand, power requirements will be much higher, and will compare, roughly, with those encountered in hybrid car radios; typical currents here may range from 1.0 to as high as 2.5 amperes.

4) **TEMPERATURE COMPENSATION** – Special components to compensate for varying ambient temperature conditions may be used in various stages of transistorized car radios. Temperature compensating ceramic capacitors are used quite often in local oscillator circuits; here, the units serve to stabilize operating frequency with temperature changes. Thermistors (temperature sensitive resistors) are used to determine the bias of power amplifier stages; they serve to adjust transistor base bias currents automatically with changes in temperature, thus maintaining linear, distortion-free operation and reducing the possibilities of thermal runaway. If a service complaint involves "temperature sensitivity" . . . for example, "the set works fine on cool days, but distorts on hot days" . . . the trouble is probably due to either a *leaky t*ransistor or to a defective temperature compensating component.

5) **TRANSISTORS** – The General Service Notes outlined in earlier Sections apply here. Important points to remember . . . (a) don't operate a power amplifier stage without a load, as this may damage power transistors; (b) when replacing R.F. or I.F. transistors, realignment *and* an adjustment in the neutralization network (if used) may be necessary; (c) push-pull transistor circuits are generally designed to used *matched pairs;* (d) *don't* try to check transistor stages by *shorting base electrodes* to ground as a variation of the Cir-

STEP	TEST PROCEDURE
1	Preliminary check – Disconnect antenna. Turn set Volume control to maximum. Place one finger on base electrode of the audio-detector stage (167, Fig. 7-1). A hum, buzz, or similar noise should be heard in the loudspeaker. If no signal is heard, go to Step 2.
2	Check output stage – Remove 1st audio stage transistor (171, Fig. 7-1) and apply an audio signal to the base element of each output stage transistor (169, 170, Fig. 7-1), one at a time. The test signal may be obtained from an Audio Signal Generator or from the A.F. Output jack of a standard R.F. Signal Generator. (a) If a weak signal is heard in the loudspeaker as each transistor is checked, the output stage is working; go to Step 3. (b) If no signal is heard, check the output stage, including the loudspeaker.
3	Check interstage transformer – Apply the test audio signal to the collector pin of the 1st audio stage socket (the transistor was removed in Step 2). Compare the signal output to that obtained in Step 2(a). (a) If signal is increased, go to Step 4. (b) If signal is same, weaker, or absent, check the driver transformer (200, Fig. 7-1). Turn set's power off and check the transformer for continuity and shorts.
4	Check 1st audio stage (driver) – Reinstall the 1st audio transistor (171, Fig. 7-1) and apply your test audio signal to its base electrode, comparing the loudspeaker output to that obtained in Step 3. (a) If output is much louder, go to Step 5. (b) If output is about the same or weaker, check the 1st audio stage. Try a replacement transistor if voltage and continuity tests give normal results.
5	Check audio-detector stage – As a final check, apply a test audio signal to the base electrode of the audio-detector stage (167, Fig. 7-1), comparing the output here with that obtained in Step 4. (a) If output is approximately the same, the audio-detector stage is normal. (b) If output decreases, check this stage.

TABLE 7-C: AUDIO TROUBLESHOOTING CHART. If the test procedures described in Table 7-B indicate the defect to be in the audio section, use the techniques outlined here to isolate the trouble to a specifc part or connection.

cuit Disturbance Test; (e) don't short heat sinks or power transistor cases to ground; (f) be sure to adjust emitter current (base bias) in power stages.

6) **VOLTAGES** – When bench-checking car radios using a line-operated Power Supply, simulate actual operating conditions as nearly as possible. In a nominal "12-volt" electrical system, actual D.C. voltages may run to 14.4 volts or more . . . and may drop *under* 12-volts under heavy loads. As a final check on a repaired receiver,

COMPLAINT	CHECK THESE SECTIONS												WATCH FOR											
	Power source	Antenna Ckt.	R.F. Stage(s)	Mixer (Conv.)	Local Osc.	I.F. Stages	Detector	AGC (AVC) Ckt.	Audio preamp.	Audio driver	Audio output	Automatic Tuner (If used)	Poor contacts	Defective shields	Loose connection	Defective by-pass	Defective coupling	Misalignment	Low Gain transist.	Leaky transistor	Incorrect bias	Noisy control	Dirty tuning cap.	Mechanical defect
DEAD – doesn't work	★	●	●	●	●	●			●	●	●		●		●	★		●		●				●
INSENSITIVE – picks up only one or two stations.	★	●	●	●	●	●	●	●					●			●	●	★	●	●	●			
LOW OUTPUT – good pick-up but low volume.	★						●		●	●	★					●	★		●	●	★			
OSCILLATION – squeals, motorboating.	★		●	●		★			●	●				★		★		★			●			
INTERFERENCE – or tunable noise.		★	●	●		●								●		●		★					●	
NOISE – hum, hash, or pops and cracks.	★	★	●	●		●			●	●	●	●	●	★	●	★		●				●	●	●
TUNING OFF – dial won't track.			●	●	★	★						●						★						●
DISTORTION – sound garbled.	★						●		●	●	●					★	★		●	●	★			
POOR FREQUENCY RESPONSE						●	●		●	●	★					●	●	●						
INTERMITTENT	★	★	●	●	★	●	●	●	●	●	●	●	●	★	★	●	●			●		●	●	●
DOESN'T TUNE	●				★	●						★	★		●			●	●				●	●

TABLE 7-D: SPECIFIC COMPLAINT TROUBLESHOOTING CHART — Where there is a specific complaint rather than the general complaint of "doesn't work," you can use this table as a guide to servicing transistorized car radios. For maximum servicing speed, use this table in conjunction with the techniques described in Tables 7-B and 7-C. Refer to Section 1 for information on specific service techniques.

make sure that it will operate properly with *both* higher and lower operating voltages . . . but don't apply an *excessively* high input voltage. A good range for most checks is from 11.5 to 14.5 volts.

7) **OTHER NOTES** – Except when servicing "combination" receivers, don't "pull" a set unless sure that the defect is in the receiver chassis and not in connector cables, antenna lead, power lead, or other circuits external to the set itself. If the complaint is an obscure one, try the set's operation both with motor off and with the engine running, "gunning" the motor slightly; this will increase supply voltage slightly, and may provide a clue as to the type of trouble.

TROUBLESHOOTING CHARTS

Since the basic circuits used in transistorized car radios are very similar to those employed in portable receivers, the Troubleshooting Charts given in Section 5 (Tables 5-G, 5-H, 5-I, 5-J, 5-K, 5-L, and 5-M) may be used as a guide to servicing these radios. Additional Charts which may prove useful are given in Tables 7-B, 7-C, and 7-D. Tables 7-B and 7-C outline the manufacturer's recommended Service Procedure for the Delco Model 7268085 receiver discussed in this Section, with Table 7-B applying specifically to troubles in the R.F.-I.F. circuits and Table 7-C used for troubles in the audio section. Although applying to a specific receiver, both of these tables may be used, with but little modification, when checking virtually *any* transistorized car set. Finally, Table 7-D lists common service complaints, indicating the stage(s) of the receiver where the trouble is probably located and specific defects which may cause the complaints.

Section 8

SERVICING TRANSISTORIZED TELEVISION SETS

WHILE COMMERCIALLY manufactured transistorized television receivers are just starting to appear in substantial quantities, the *first* transistorized TV set was designed and built not many months after the invention of the transistor itself. In fact, a number of basic TV circuits had evolved and several different types of TV sets had been built *before* mass-produced hybrid or transistorized AM Broadcast-Band receivers were offered to the general public. These early TV sets were all hand-made engineering models assembled by various semiconductor and receiver manufacturers to gain experience in practical transistor circuitry and to prove out basic design concepts. One of the earliest of these units was a portable TV receiver built by RCA. It used a 5″ cathode-ray picture tube (the *only* "tube" in the set) and a number of developmental transistors; the now obsolete *point-contact* transistor was used extensively in its design and, even here, carefully selected units had to be employed. Its performance, while adequate, left quite a bit to be desired in terms of tube-operated set standards . . . but it did work!

Since these early days, both TV receiver and semiconductor manufacturers have carried out extensive development programs. Special circuits were devised to overcome the limitations of existing components, only to be discarded when the introduction of new transistor types made simpler circuits feasible. As in the case of AM receiver design, one of the major "stumbling blocks" to the introduction of fully transistorized TV sets was the early lack of reliable low-cost R.F. transistors. In TV circuits, however, the situation was aggravated by the much higher frequencies encountered. A transistor with an *alpha* or *beta cut-off frequency* (see Section 10, Table 10-B) of 3 or 4 MC, for example, can be used in all stages of a Broadcast-Band receiver, but is suitable for only a few stages in a TV set. An alpha cut-off of 10 MC is needed for transistors used as wide-band video amplifiers or in intercarrier audio I.F. stages; 50 MC transistors are needed for video I.F. amplifiers, and, finally, cut-off frequencies of 250 MC or more are needed in TV tuner circuits. While such transistors could be obtained . . . and were, in fact, used in the experimental receivers . . . they were not low-cost mass-produced units, but carefully selected hand-made types.

As we have seen in Sections 4 and 6, portable and car radio manufacturers "side-stepped" the early lack of R.F. transistors by the introduction of "hybrid" receivers which used vacuum tubes in their R.F.-I.F. stages and transistors in their audio sections. Such a move was practical and desirable because both of these receiver types are battery-powered, and a switch even to hybrid circuits permitted substantial savings in power requirements. In TV sets, on the other hand, there were no compelling reasons to go to hybrid arrangements; as long as vacuum tubes have to be used in most stages and power-line operation is mandatory, the savings in power obtained by partial transistorization is hardly worth the extra cost involved. In addition, the relatively high temperatures developed by the remaining tubes could have an adverse effect on transistor operation. Transistors, like all semiconductor devices, are quite sensitive to ambient temperature conditions (hence the use of thermistors as compensating elements in audio amplifier designs).

Unfortunately, high frequency limitations were not the only factors preventing the early transistorization of commercially-built TV receivers. Relatively high signal voltages are needed to "drive' standard picture tubes to full contrast; this, in turn, calls for the availability of transistors capable of withstanding potentials on the order of 40 to 100 volts. Early junction transistors were invariably low-voltage units. Finally, the comparatively high deflection currents needed by large cathode-ray tubes calls for the use of multi-watt (rather than milliwatt) power transistors in their sweep circuits. As we have seen (Section 3), medium and high power transistors were not produced in quantity until some time after the introduction of low-power units.

Today, however, these early technical limitations have been overcome with the introduction of new transistor types having adequate maximum ratings and performance specifications. R.F. transistors are available which can be used as oscillators and amplifiers to frequencies as high as 1,000 MC; "high voltage" units capable of furnishing ample video drive signals are produced by several firms; finally, there are many multi-watt power transistor types in production which are quite suitable for use in horizontal and vertical deflection circuits. As a result, several manufacturers have developed transistorized (except for the picture tube) portable television receiver prototypes which are fully the equal of corresponding tube-operated models. One such

Fig. 8-1: As shown here, many transistorized television receivers, externally at least, are about the same size as vacuum tube-operated "portable" TV receivers.

receiver is shown in Figs. 8-1 and 8-2. At the present writing, then, the only serious "road-block" to the wide distribution of transistorized TV sets is the economic factor . . . such sets are more expensive than tube-operated sets of similar size and performance. However, with the continuing downward trend in transistor prices, and corresponding reductions in the cost of transistorized equipment, the repair and maintenance of transistorized TV receivers will become an important part of the service technician's work in the near future.

TYPICAL CIRCUIT OPERATION

From a functional viewpoint alone, the various sections found in a transistorized TV receiver bear an almost one-to-one relationship to corresponding sections in a tube-operated set and are interconnected in the same operational sequence. Thus, the block diagram of a typical transistorized TV set, as given in Fig 8-3, is not far different from that of more familiar receivers. Both tube and transistor-operated sets have a Tuner ("Front-End"), Video I. F. Strip, Video 2nd Detector, Video Amplifier, Audio I.F. Strip, FM Detector, Audio Amplifier Section, AGC Control circuits, Sync Separator section, Vertical Deflection circuits, Horizontal Deflection stages, a High Voltage source (for the CRT), and, of course, a suitable Power Supply. The differences between the two types of receivers, then, are found not in the functions of individual sections, but in the *number of stages* per section and in the detailed circuitry employed. As a general rule, transistors supply less gain per stage than vacuum tubes, with *more* stages required to obtain similar overall gain in a receiver; as you may recall (Section 5) a six-transistor AM receiver has performance specifications which approximate those of a typical five-tube set.

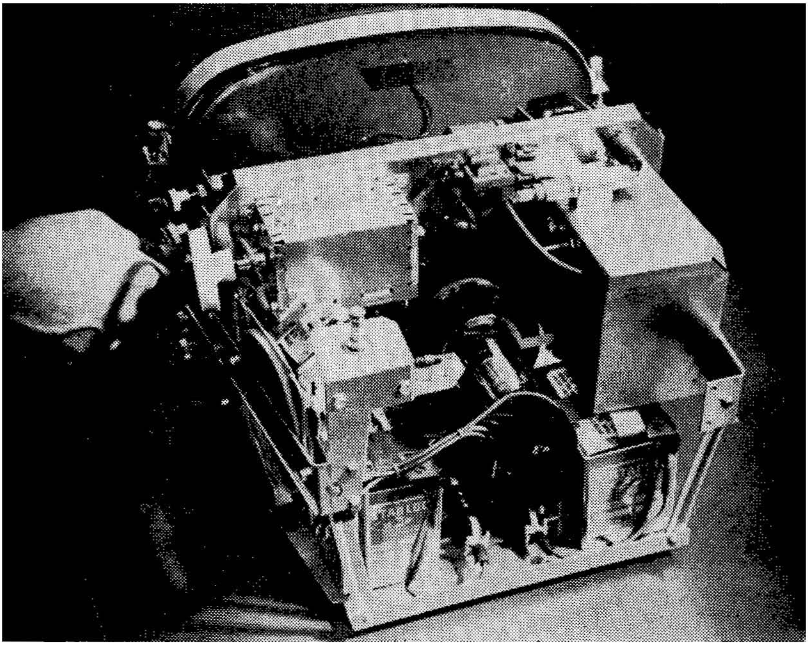

Fig. 8-2: Chassis view of the transistorized TV receiver shown in Fig. 8-1. This set uses a conventional cathode ray picture tube. Some sets use a small CRT and optical magnifying system.

As far as overall performance is concerned, too, there is relatively little, if any, difference between tube and transistor sets. Both may use the same picture tubes, both receive all standard VHF TV channels, both supply pictures of similar brightness, definition, and contrast, both have similar sensitivity, both supply sound of similar volume and fidelity, and both have corresponding types of controls. Physically, transistorized sets may be about the same size and weight as tube-operated receivers. In both sets, the picture tube assembly is the chief factor in determining overall dimensions. While transistors . . . and transistor components . . . are lighter than vacuum tubes, this weight advantage is offset by the weight of the batteries used in the power supply. On the other hand, the power requirements of transistorized sets are but a fraction of those of tube receivers . . . typically, between 5 and 15 watts per hour versus 100 to as high as 350 watts per hour for tube-operated sets. Common TV set designs employ from 20 to about 30 transistors, and from 6 to as many as 15 semiconductor diodes.

Let's take a look, now, at typical transistorized TV circuits. The schematic diagrams of the various sections found in TV receivers are

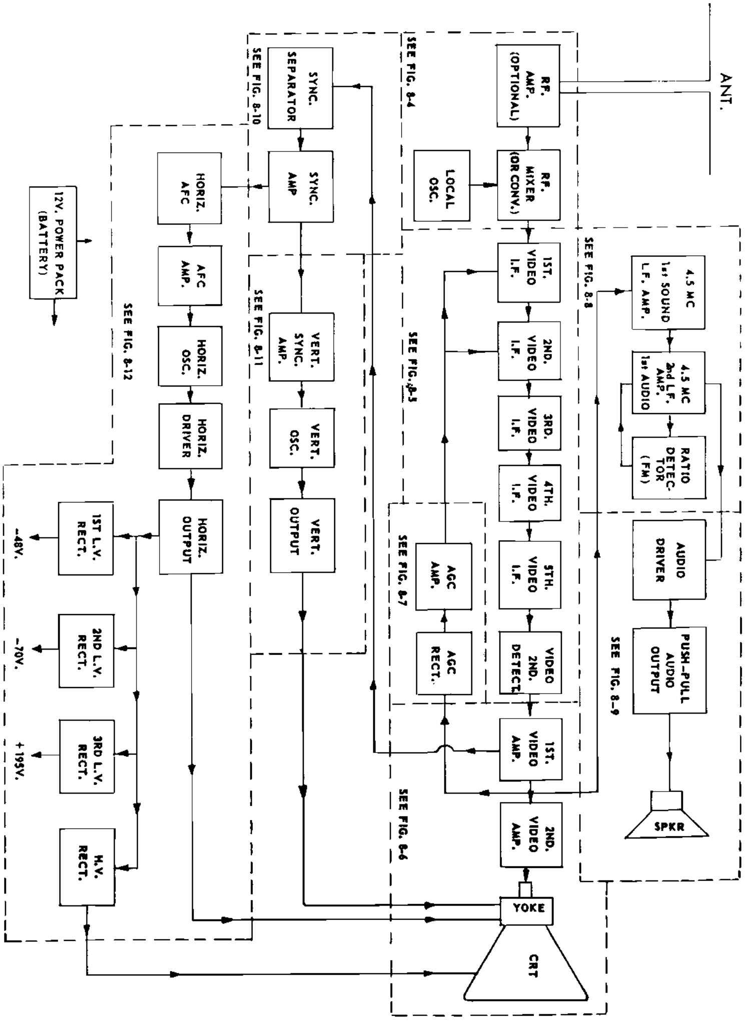

Fig. 8-3: Block diagram of a typical transistorized television receiver. For convenience in circuit description, the diagram has been divided into basic sections with dashed lines.

given in Figs. 8-4 to 8-13, inclusive. These correspond to the identification of the individual sections, as shown in the block diagram (Fig. 8-3).

TV TUNERS. Typical TV Tuner circuits are given in Figs. 8-4(a) and 8-4(b). The Tuner (often called the set's "Front-End") receives the R.F. signals picked-up by the antenna system, selects the desired

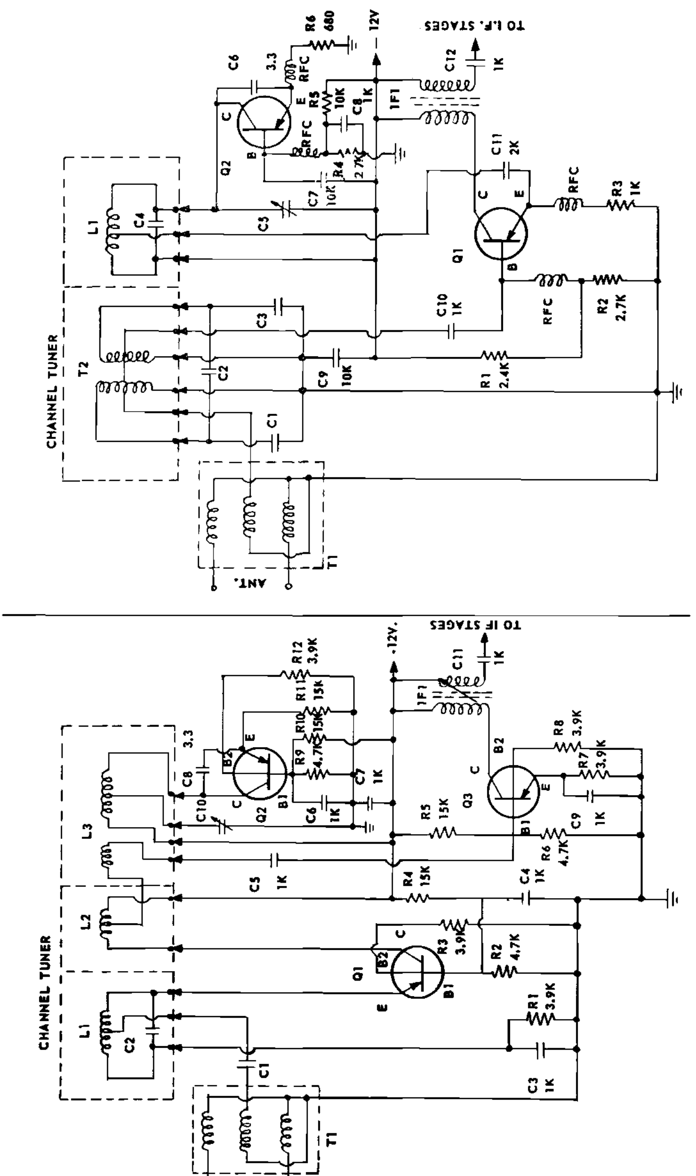

Fig. 8-4: Transistorized TV tuner (Front-End) circuits. The circuit shown at (a) uses high frequency tetrodes and includes an R.F. stage. The circuit shown at (b) uses triodes and does not employ an R.F. stage ahead of its mixer.

TV channel, and combines this signal with a locally developed signal to form the video I.F. signal. Since frequencies up to the 200 MC range are encountered here, Tuner circuits generally use high-frequency junction *tetrodes,* MADT units, or diffused-base "Mesa" transistors. Overall gain is generally between 10 and 30 db, depending on the types of transistors used and bandwidth; noise levels may run higher than is customary in tube-operated tuner circuits, particularly in low-cost designs . . . typical figures here are from 6 to 14 db.

The circuit shown in Fig. 8-4(a) uses *PNP* tetrode transistors. In operation, the balanced input signal supplied by a conventional antenna system is converted into a single-ended signal by *Balun* transformer T1, and coupled through C1 to the tuned input circuit, L1-C2. From here, the selected channel signal is applied to the emitter-base circuit of Q1, connected as a *common-base* R.F. amplifier. R1, bypassed by C3, serves as the emitter bias resistor, developing a small D.C. voltage which helps stabilize normal base bias, as well as to supply a "reverse bias" to the 2nd base connection (B2)* through R3. Base bias is furnished through voltage-divider R2-R4, bypassed by C4. Q1's amplified output signal is further selected by L2, tuned by distributed and inter-electrode capacities, and is applied through a coil inductively coupled to the local oscillator's coil (L3) and through C5 to the mixer stage, Q3, wired in the common-emitter configuration.

Q2 serves as a local oscillator; the common-base configuration is used. Tapped oscillator coil L3 is tuned by *Fine Tuning* capacitor C10. C8 furnishes the feedback signal necessary to start and sustain oscillation. The reverse bias needed by the 2nd base is developed across emitter resistor R11 and applied to the base connection through R12. Normal base bias is supplied through voltage-divider R9-R10, bypassed by C6. C7 serves as an R.F. bypass across the power supply bus. In the mixer stage, Q3, the locally generated and selected incoming R.F. signals are combined to form the set's I.F. signal, which, in turn, is selected by Q3's tuned collector load, the primary winding of interstage I.F. transformer IF1. Q3's base bias is supplied through voltage-divider R5-R6 and stabilized by emitter resistor R7, bypassed by C9. The D.C. voltage developed across the emitter resistor also serves as a reverse bias for Q3's 2nd base connection, and is applied to this electrode through R8. A step-down secondary on IF1 matches the mixer to the low input impedance of the 1st I.F. amplifier; C11 serves as a D.C. blocking and I.F. coupling capacitor.

A somewhat simpler Tuner circuit is shown in Fig. 8-4(b). Here, the R.F. amplifier stage has been omitted, and high-frequency *PNP*

---

*NOTE: — For "tetrode" operation, the *second* base electrode connection is biased with a D.C. polarity *opposite* that normally applied to the base element.

triodes are used in place of tetrode transistors. Again, the balanced input signal is converted into a single-ended signal by Balun T1. Since the R.F. stage has been omitted, adequate selectivity is assured by a double-tuned input circuit, made up of transformer T2 and capacitors C1, C2, and C3. The selected R.F. channel signal is applied to the base of common-emitter mixer Q1 through C10. Q1's base bias is obtained through voltage-divider R1-R2 and applied to the base through an isolating R.F. choke (RFC), with bias stabilization assured by emitter resistor R3.

The common-base configuration is used in the local oscillator stage, Q2, with L1, tuned by C4 and *Fine Tuning* control C5, serving as the oscillator coil. The feedback necessary to start and maintain oscillation is furnished between collector and emitter circuits through C6. Q2's base bias is obtained from voltage-divider R4-R5, bypassed by C8, and is applied to the base through an isolation R.F. choke (RFC), bypassed by C7. Bias stabilization is assured by emitter resistor R6, isolated by a series R.F. choke (RFC). L1 is tapped to provide a low-impedance source, with the signal obtained here injected into the mixer's (Q1) emitter circuit through coupling capacitor C11. Q1's emitter resistor (R3) is isolated by a series R.F. choke (RFC). The video I.F. signal developed by the mixer is selected by its collector load, IF1's tuned primary winding. As in the other circuit, IF1 is provided with a step-down secondary, with its ouput signal applied to the 1st I.F. amplifier through coupling capacitor C12. C9 serves as a general R.F. bypass across the power bus.

As a general rule, transistorized TV Tuners, like tube-operated units, employ a "turret" type tuning arrangement, with different R.F. and oscillator coils provided for each TV channel. Various I.F. values may be used, depending on individual manufacturer preferences, but the familiar "40-MC" I.F. is rather common.

VIDEO I.F. Tube-operated TV I.F. strips generally use from two to four stages, with three stages being typical. Transistorized I.F. sections, in contrast, usually employ from four to six stages. Typical Video I.F. amplifier sections, including the 2nd detector stage, are illustrated in Figs. 8-5(a) and 8-5(b). The overall I.F. gain obtained will vary with the number of stages used, types of transistors employed, and individual circuit designs, but is commonly between 65 and 85 db; bandwidths are from 3.2 to 4.5 MC. AGC control is used in some designs, but not in others. Good quality R.F. transistors are used in the I.F. stages, but need not have as high a cut-off frequency as the units needed for the Tuner; tetrodes, MADTs, "Mesa" units, Surface-Barrier types, and high-frequency "Drift" transistors may be used in these circuits. The I.F. strip, of course, receives the I.F. signal developed by the receiver's "Front-End" and amplifies it to relatively

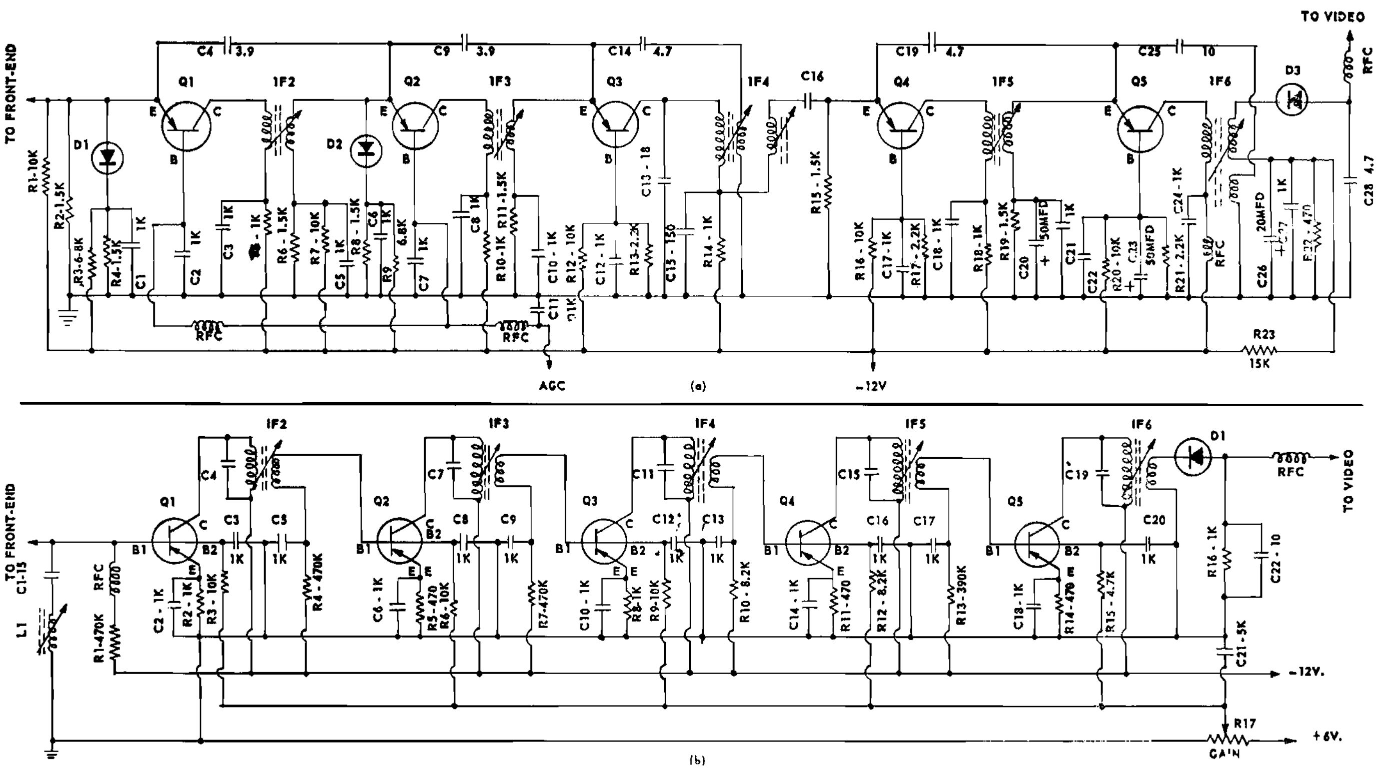

Fig. 8-5: Transistorized video I.F. amplifier strips. Both circuits employ five stages and include a diode video detector, but the circuit shown at (a) uses neutralized triode amplifiers, while the circuit given at (b) employs high frequency tetrodes.

high levels, delivering its output to a 2nd detector which strips off the modulating signal for application to succeeding stages.

Using high-frequency *PNP* triode transistors in the common-base configuration, the five-stage I.F. amplifier shown in Fig. 8-5(a) has an AGC control signal applied to its first two stages, Q1 and Q2. In operation, the I.F. signal obtained from the receiver's "Front-End" is applied to Q1's emitter-base circuit, appearing across emitter resistor R2. Emitter bias is furnished through voltage-divider R1-R2. Q-1's amplifield output signal is developed across its collector load, the tuned primary winding of interstage I.F. transformer IF2, and inductively coupled to IF2's step-down secondary winding where it is applied to the 2nd stage, Q2; a step-down ratio here assures a good impedance match between stages. Collector current is furnished through decoupling resistor R5, bypassed by C3. Stage neutralization is provided by C4, connected between Q1's emitter and IF2's secondary. A variable base bias is used for AGC control, and this is applied to the base through an R.F. choke (RFC), bypassed by C2.

The operation of the 2nd I.F. stage, Q2, is similar to that of the 1st, with emitter bias furnished through voltage-divider R6-R7, bypassed by C5, collector current furnished through R10, bypassed by C8, and with an AGC base bias applied through an R.F. choke (RFC), bypassed by C7; stage neutralization is provided by C9, and a step-down interstage I.F. transformer couples Q2's amplified output signal to the 3rd stage.

Diodes D1 and D2 function to maintain reasonably constant input impedances with changes in the AGC bias applied to Q1 and Q2, respectively. If these diodes were not used, the transistors' input impedances would tend to rise as the AGC bias is reduced (reducing stage gain); this, in turn, would change the loading these transistors present to their tuned circuits and cause a corresponding change in receiver bandwidth and, to some extent, in I.F. tuning. To see how the diodes accomplish their job, let's examine the action of D1. Diode D1 is biased by the D.C. voltage appearing across emitter resistor R2 and by a fixed bias applied through voltage-divider R3-R4, bypassed by C1; D2 is similarly biased by the voltage across R6 and by voltage-divider R8-R9, bypassed by C6. Under normal conditions, the bias voltages applied to the diodes is such as to maintain them in a non-conducting or "high-resistance" condition . . . thus, the relative polarity of the applied voltages maintains their anodes negative with respect to their cathode elements. Since D1 and D2 act like high value resistors under these conditions, they have little or no effect on circuit operation.

Consider, now, the action taking place as AGC bias is reduced, reducing stage gain. When this happens, the emitter current through R2 (and R6) is reduced, decreasing the voltage drop across this resistor. At the same time, Q1's (and Q2's) input impedance starts to rise. As the voltage appearing across R2 (and R6) starts to drop, however, less "reverse" bias is applied to D1 (and D2) and the impedance presented by the diode drops. Since D1 is shunted across Q1's input circuit as far as signal voltages are concerned, a *drop* in its impedance serves to compensate for the *rise* in the transistor's input impedance, thus maintaining a constant load.

Returning, now, to the 3rd I.F. stage, the signal obtained from IF3's secondary is applied to its emitter-base circuit. Emitter resistor R11, bypassed by C10, serves to stabilize the *fixed* base bias furnished through voltage-divider R12-R13, bypassed by C12. Collector current is furnished through decoupling resistor R14, bypassed by C15. Q3's output load is a *double-tuned* I.F. transformer, IF4, used to flatten the receiver's I.F. response characteristic. A small secondary winding is used to obtain a negative feedback signal for stage neutralization, and this is applied back to Q3's emitter through C14. IF4's primary is tuned in part by its ferrite core and distributed circuit capacities and by C13.

The signal obtained from IF4's tuned secondary circuit is coupled through D.C. blocking capacitor C16 to Q4's emitter-base circuit. Emitter resistor R15 acts to stabilize the fixed base bias applied through voltage-divider R16-R17, bypassed by C17. Collector current is furnished through R18, bypassed by C18. A single-tuned step-down interstage I.F. transformer, IF5, is used between the 4th (Q4) and 5th (Q5) stages. Q4 is neutralized by the signal coupled between IF5's secondary and its emitter through C19.

Continuing, the amplified I.F. signal obtained from IF5's secondary is applied to Q5's emitter-base circuit, with this stage's output signal developed across IF6's tuned primary winding. Base bias current is furnished by voltage-divider R20-R21, bypassed by C22 and C23, and stabilized by emitter resistor R19, bypassed by C20 and C21. Collector current is furnished through an R.F. choke (RFC), bypassed by C24. Q5 does not operate as a strict Class A stage (as do the other stages); instead it automatically adjusts its bias with modulation peaks. This is accomplished by the relatively large bypass capacitors (C20 and C23) used in its emitter and base circuits.

I.F. transformer IF6 has two secondary windings. One supplies a neutralizing signal to Q5's emitter through C25. The other drives a diode-type 2nd detector (D3). A small bias is applied to the detector to assure linear operation; this is obtained through voltage divider R22-R23, bypassed by C26 and C27. C28 serves as an I.F. bypass, with the detected video signal coupled through an R.F. choke (RFC) to the following stages. C11 serves as a bypass across the AGC supply bus.

The I.F. strip shown in Fig. 8-5(b) uses five *PNP* tetrode transistors in the common-emitter configuration. AGC is *not* used here; instead, overall gain is varied by changing the fixed reverse bias applied to the transistors' 2nd base connections. This is accomplished by obtaining a separate bias voltage from *GAIN* control R17, bypassed by C21, and applying it through individual isolating resistors (R3, R6, R9, R12, and R15) to the different 2nd base electrode terminals; adequate bypass is provided in each case (C3, C8, C12, C16, and C20, respectively). In operation, the signal obtained from the TV Tuner is applied to Q1's base-emitter circuit. L1-C1 serve as an adjacent channel trap. Base bias current is furnished through R1 and a series isolation R.F. choke (RFC) and stabilized by emitter resistor R2, bypassed by C2. Q1's amplified output signal is developed in the primary of a conventional single-tuned I.F. transformer, IF2, where it is inductively coupled to an impedance-matching step-down secondary and applied to the base-emitter circuit of the 2nd I.F. amplifier, Q2. C4, in conjunction with a ferrite core, serves to tune IF2's primary winding. Virtually identical circuits are used in the remaining stages, and need not be examined in detail. In each case, a single-tuned step-down transformer is used between stages (IF3, IF4, IF5, and IF6), and base bias is furnished by the combination of a series base resistor (R4, R7, R10, and R13, bypassed by C5, C9, C13, and C17, respectively) and bypassed emitter resistor (R5-C6, R8-C10, R11-C14, and R14-C18). Finally, the amplified I.F. signal obtained from the 5th I.F. stage is applied through IF6 to a conventional diode-type 2nd detector (D1). R16, bypassed by C22, serves as the diode load, with the detected video signal appearing here coupled through an R.F. choke (RFC) to the next stage.

VIDEO AMPLIFIER. A typical two-stage Video Amplifier circuit is given in Fig. 8-6. This section serves to amplify the detected video signal obtained from the 2nd detector, boosting its amplitude sufficiently to permit application to a cathode-ray picture tube. At the same time, it may furnish signals to the Sync Separator, AGC Detector, and, assuming an intercarrier audio system is used, to the Audio I.F. circuits. Since the Video Amplifier must have a reasonably flat response to several MC, it is necessary to use low-frequency *R.F.* transistors in this section. As a minimum, the units should have a cut-off frequency of 5 MC (preferably higher). The final (output) transistor must be a "high-voltage" type, capable of supplying a signal output of from 30 to over 100 volts, peak-to-peak, depending on the type of CRT used. Typically, a transistorized Video Amplifier section will supply a voltage gain, overall, of from 25 to 100, and will have a bandwidth of from 3.0 to 4.0 MC.

As we can see by examining the schematic diagram, Fig. 8-6, two *PNP* transistors are used here. The first stage, Q1, serves as a

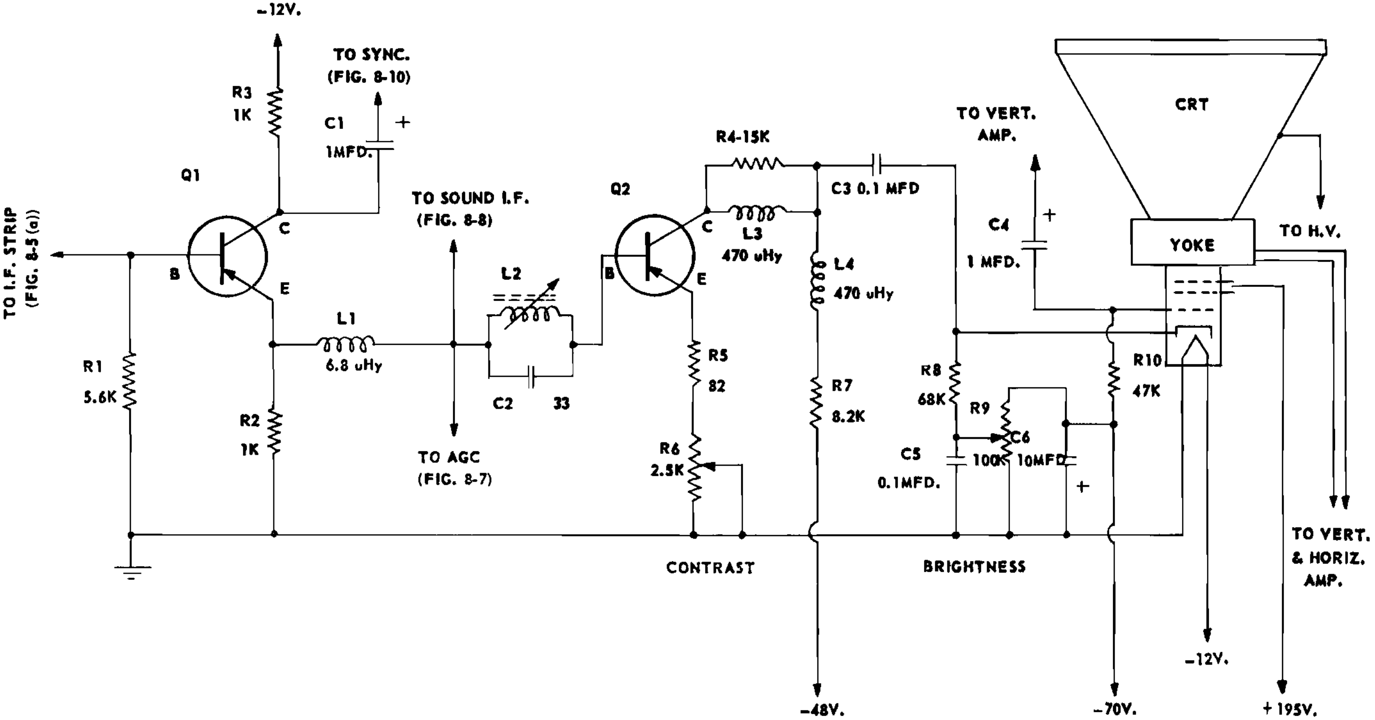

Fig. 8-6: A typical two-stage video amplifier. The output stage is operated at a relatively high collector voltage to provide adequate drive for the cathode-ray picture tube (CRT). Sync pulses are obtained from the collector of Q1, the 4.5 MC sound I.F. from Q1's emitter.

split-load amplifier, the second, Q2, as a common-emitter amplifier, with direct-coupling used between stages. In operation, the video signal obtained from the receiver's 2nd detector is applied to Q1's base, appearing across base resistor R1. Direct-coupling is used between the 2nd detector and Q1, so that *both* the A.C. (signal) and D.C. components of the detected signal appear here; the D.C. component, of course, provides an automatic bias for the stage. Q1 supplies two output signals. One appears across collector load R3 and is coupled from here through D.C. blocking capacitor C1 to the Sync Separator circuit; the other appears across emitter load R2 and is coupled through peaking coil L1 and the 4.5 MC audio I.F. trap, L2-C2, to Q2's base. Take-off taps are provided at the junction of L1 and the trap for the sound I.F. and AGC signals. Q2's base bias is obtained from Q1 by virtue of the direct-coupling between stages, but is determined, in part, by emitter resistor R5-R6. Q2 functions as a conventional common-emitter amplifier, with its collector load made up of peaking coils L3 and L4 and load resistors R4 and R7. The amplified video signal appearing across L4-R7 is coupled through D.C. blocking capacitor C3 to the picture tube's cathode. A relatively high collector voltage is used on this stage in order to develop the high peak-to-peak signal needed to drive the CRT picture tube to full contrast. Stage gain is controlled by *Contrast* control R6 in Q2's emitter circuit; as R6's value is changed, both stage bias and emitter degeneration are changed . . . note that the emitter resistors are *not* bypassed.

In the picture tube circuit, a fixed operating bias is applied to the control grid through isolating resistor R10, with C4 used to apply a vertical retrace blanking signal (obtained from the Vertical amplifier) to the same electrode. A variable bias is obtained from potentiometer R9, bypassed by C5, and is applied through isolating resistor R8 to the CRT's cathode, where it serves to control beam intensity; thus, R9 serves as a *Brightness* control. C6 is used as a bypass across the grid and cathode bias supply bus. Appropriate D.C. voltages are applied to the CRT's other electrodes, with Vertical and Horizontal sweep signals applied to its deflection yoke.

AGC CIRCUIT. As we have seen in earlier Sections, a transistor amplifier's gain may be controlled by adjusting its relative base-emitter bias. This may be done by applying an appropriate control signal to *either* the base or emitter electrodes (or to *both*) with a fixed bias applied to the other. If this control signal is made to vary with the amplitude of the picked up R.F. (or amplified I.F.) signal in a receiver, an effective Automatic Gain Control (AGC) system is obtained. As stronger signals are received, receiver gain is reduced, and vice-versa, maintaining a reasonably constant output level and reducing both "fading" and "blasting." In a TV set, of course, AGC minimizes changes in picture contrast and insures good Vertical and

Horizontal sweep synchronization. The polarity of the control signal depends on . . . (a) whether it is applied to the base *or* emitter electrodes, and (b) whether *PNP* or *NPN* transistors are to be controlled. As we have seen, however, the functioning of a transistor AGC (or AVC) system is the opposite of that encountered in vacuum tube circuits. In a tube-operated amplifier, an *increase* in bias *reduces* gain, while, in a transistor stage, an *increase* in bias *increases* gain. Therefore, to obtain effective AGC action, the circuit used must *reduce* the bias of the controlled stages with increases in signal strength.

A typical AGC control amplifier circuit is given in Fig. 8-7. This particular circuit is intended for use with a Video Amplifier similar to that shown in Fig. 8-6, and with a Video I.F. similar to that given in Fig. 8-5(a). Where different circuit arrangements are used, the AGC circuit would have to be modified accordingly. Here, a semiconductor diode is used as a peak detector (D1) and a *PNP* transistor, Q1, serves as a common-emitter D.C. amplifier.

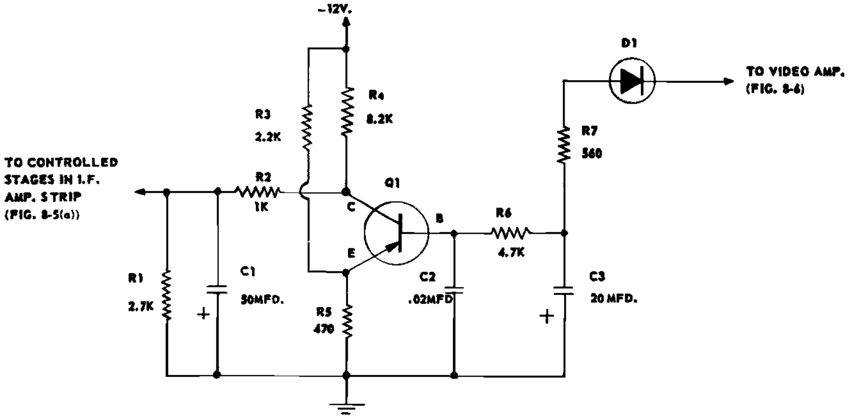

Fig. 8-7: AGC detector and amplifier circuit. The AGC signal is obtained from the 1st video amplifier (see Fig. 8-6) and supplied to the controlled stages in the video I.F. amplifier strip (Fig. 8-5).

In operation, D1 rectifies the video signal obtained from the Video Amplifier stage, developing a D.C. voltage across C3 proportional to the modulation peaks (sync pulses) of this signal. This is proportional, of course, to the amplitude of the original R.F. signal. R7 serves as a current limiting resistor and R6, bypassed by C2, as a simple filter. D.C. polarity is such that a negative bias is applied to Q1's base by the voltage appearing across C3. Q1's emitter bias is fixed by voltage-divider R3-R5, and R4 serves as its collector load. If a weak signal is received, relatively little bias is developed across

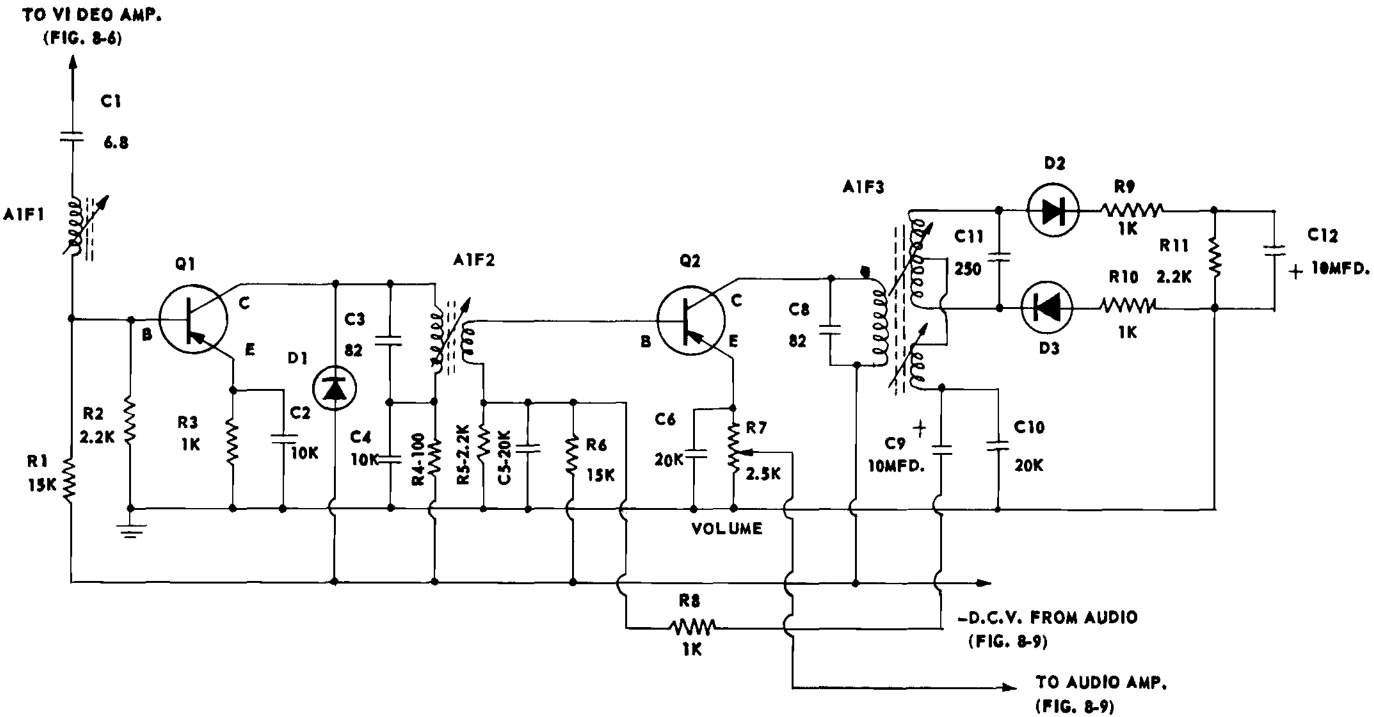

Fig. 8-8: Audio I.F. amplifier, FM detector, and 1st audio stage. Operating at 4.5 MC, this circuit selects, amplifies, and detects the audio I.F. signal, with the audio signal obtained from the ratio detector reflexed through the second I.F. amplifier (Q2), which then serves as the 1st audio amplifier.

C3 and, as a result, Q1 draws little collector current and there is a minimum voltage drop across collector load R4. This permits a *maximum* negative bias to be applied through delay network R2-C1, appearing across R1, to the base electrodes of the AGC controlled I.F. amplifier stages, assuring maximum gain in these stages to compensate for the weak signal. When a strong signal is received, on the other hand, a substantial bias can be built up by C3; this, in turn, increases Q1's collector current, increasing the voltage drop across R4, and *reducing* the base bias applied to the I.F. stages, thus reducing their gain, and compensating for the stronger input signal.

AUDIO I.F. As a general rule, *intercarrier* audio systems are used in transistorized TV sets. Here, of course, the 4.5 MC "beat" between the audio and video I.F. carrier signals is abstracted from the detected and amplified video signal and used as an Audio I.F. This 4.5 MC signal carries the original FM modulation of the TV Broadcast station's sound R.F. carrier. From one to three stages may be used in the Audio I.F. section, with the last stage driving an appropriate FM detector circuit. Either a Foster-Seely discriminator or a standard Ratio Detector may be used; if the first is employed, however, adequate limiting must be provided to remove amplitude variations from the I.F. signal. Good quality R.F. transistors with a cut-off frequency of from 7.0 to 10.0 MC are generally employed as Audio I.F. amplifiers. A typical two-stage Audio I.F. amplifier and Ratio Detector circuit is shown in Fig. 8-8; here, *PNP* transistors are used in the common-emitter configuration, with semiconductor diodes employed in a conventional Ratio Detector. A reflex* arrangement is used in the 2nd I.F. stage, permitting this stage to serve as the receiver's 1st audio amplifier.

In operation, the 4.5 MC Audio I.F. signal obtained from the Video Amplifier is selected and coupled through series tuned circuit C1-AIF1, where it is applied to the 1st I.F. amplifier, Q1. Q1's base bias is furnished through voltage-divider R1-R2 in conjunction with emitter resistor R3, bypassed by C2. Diode D1, in Q1's collector circuit, serves as a simple limiter, reducing amplitude variations in the amplified signal. Q1's output is developed across the tuned primary winding of the 4.5 MC interstage transformer AIF2, where it is inductively coupled to an impedance-matching step-down secondary and applied to the 2nd I.F. stage, Q2. C3, along with AIF2's ferrite core, serves to tune this transformer. Q1's collector current is furnished through decoupling resistor R4, bypassed by C4.

Q2 amplifies the Audio I.F. signal, developing its output across Ratio Detector transformer AIF3's primary winding. AIF3's primary

---

*NOTE — A reflex circuit is one in which two different signals are handled at the same time . . . such as I.F. and audio signals . . . and in which one signal is coupled back from the stage's output to its input.

is tuned by C8; its center-tapped secondary by C11. The transformer, of course, applies its signal to the Ratio Detector made up of diodes D2 and D3, balancing resistors R9 and R10, load resistor R11, and stabilizing capacitor C12; here, demodulation takes place, with the final audio signal available through C9. C10 serves as an I.F. bypass. Q2's base bias is supplied through voltage-divider R5-R6, bypassed (for I.F. signals) by C5, and stabilized by emitter resistor R7, bypassed (again, for I.F.) by C6.

Returning to C9, the audio signal available here is applied through isolating resistor R8 and AIF2's secondary (which acts like a short circuit as far as audio signals are concerned) to Q2's base, permitting Q2 to serve as a reflex audio amplifier. Since AIF3's primary, serving as Q2's collector load, is effectively a short-circuit as far as *audio* signals are concerned, Q2's collector is essentially connected to circuit ground for such signals. Bypass C6, across emitter resistor R7, on the other band, is not effective at audio values due to its relatively high impedance. This permits an *audio* signal to be developed across emitter resistor R7; a potentiometer is used here, and serves as the receiver's *Volume* control. In summary, then, QT serves simultaneously as a *common-emitter* I.F. stage *and* as a *common-collector* 1st audio amplifier, thus reducing the number of stages needed in the receiver. The output signal obtained from R7 is coupled to the receiver's audio amplifier section.

AUDIO AMPLIFIER. Conventional circuits, quite similar to those found in AM Broadcast-Band receivers, record players, and intercoms, are used in the audio sections of TV receivers. Either single-ended or push-pull output amplifiers may be used, depending on the individual set manufacturer. Output powers may range from 200 milliwatts to as high as 5 or 10 watts. Standard low frequency transistors may be used here, with "high power" types employed in the output stage if output powers greater than one watt are needed. A typical circuit is given in Fig. 8-9.

Referring to this diagram, three *PNP* transistors are used, with the common-emitter configuration employed in all stages. In operation, the signal obtained from the Audio I.F. section is coupled through D.C. blocking capacitor C1 to the base of driver stage Q1. Base bias is furnished to Q1 through voltage-divider R1-R2, with bias stabilization provided by emitter resistor R3, bypassed by C2. R4 and C3 form a simple "L-type" decoupling filter in the power supply line. Q1's amplified output signal is coupled through interstage impedance matching transformer T1 to a Class B push-pull power amplifier, Q2-Q3, with this stage's small base bias furnished by voltage-divider R5-R6. Unbypassed emitter resistors R8 and R9 serve to stabilize and to balance stage operation. Distortion is reduced by

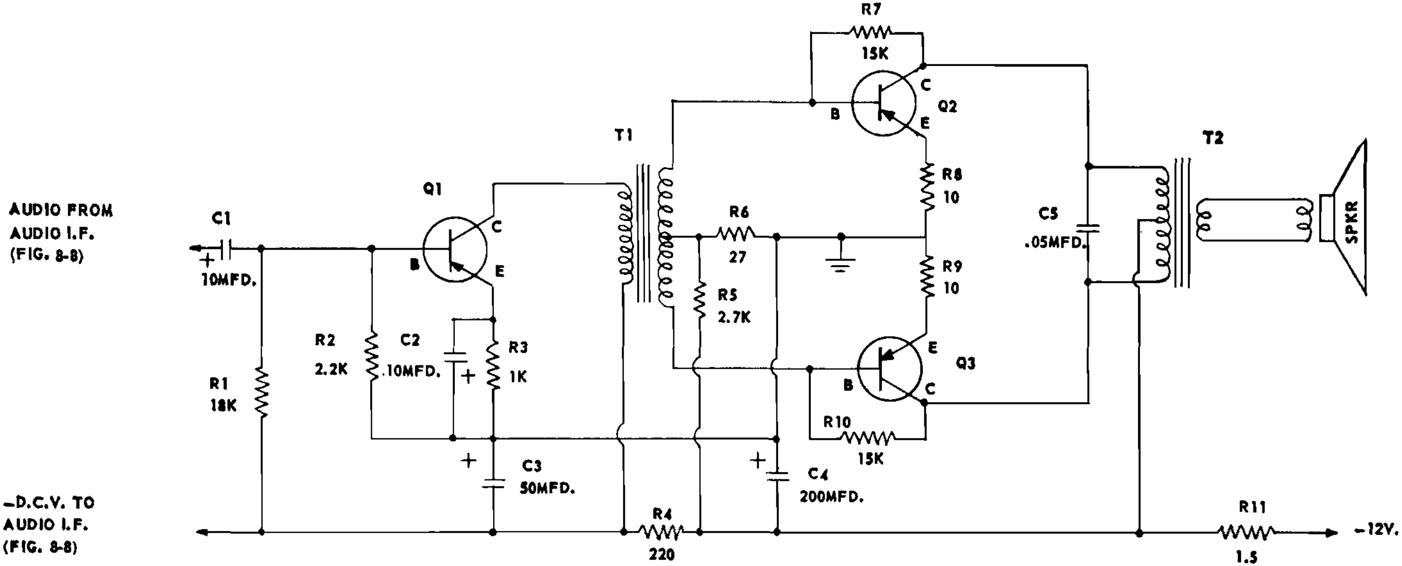

Fig. 8-9: Audio amplifier section. Obtaining its input from the audio I.F. section, this section further amplifies the signal and applies it to the loudspeaker.

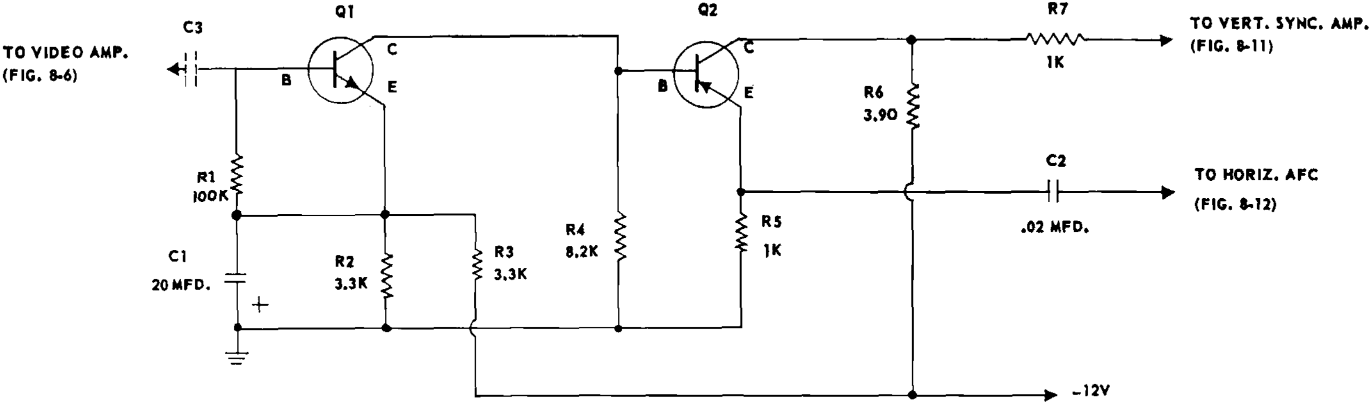

Fig. 8-10: Sync separator (or stripper) and sync amplifier circuits. This section receives its signal from the video amplifier (See Fig. 8-6) and separates the vertical and horizontal synchronizing pulse, supplying these to the vertical (Fig. 8-11) and horizontal (Fig. 8-12) sweep circuits, respectively.

applying a degenerative feedback signal between each transistor's collector and base electrodes through feedback resistors R7 and R10. Collector-to-collector capacitor C5 serves to bypass higher frequency audio components and thus to further reduce the effects of harmonic distortion. Line filter R11-C4 acts to isolate the power amplifier from other receiver stages. Finally, the power amplifier's output signal is coupled to the PM loudspeaker through step-down transformer T2.

SYNC SEPARATOR. A typical two-stage Sync Separator circuit using *NPN* (Q1) and *PNP* (Q2) transistors as cascaded direct-coupled complementary amplifiers is given in Fig. 8-10. This section takes the composite signal from the Video Amplifier section (Fig. 8-6) and removes and amplifies the sync pulses, supplying these to the Vertical and Horizontal sweep circuits. The transistor types used here should have good switching characteristics. In operation, Q1's emitter bias is furnished through voltage-divider R2-R3, bypassed by C1, with R4 serving as its collector load. This stage is operated *without a fixed base bias,* but, instead, builds up a *reverse* bias voltage across its input coupling capacitor (C3) proportional to the peak amplitude of the video signal applied to its base electrode. Input capacitor C3, shown dotted in Fig. 8-10, corresponds to C1 in Fig. 8-6. C3 is charged through Q1's base-emitter circuit on positive-going half cycles of the applied video signal, building up a negative voltage with respect to Q1's emitter. Since C3 can discharge only through R1, this negative voltage keeps Q1 cut-off, allowing it to conduct *only* on the *peaks* of the applied video signal; these peaks, of course, correspond to the sync pulse component of the composite signal. Thus, the video signal's sync pulses are stripped off and amplified, appearing across collector load R4, where they are applied to Q2's base. Q2 serves as a split-load pulse amplifier, with the output signal developed across collector load R6 coupled through R7 to the Vertical sweep circuit, and the signal developed across emitter load R5 coupled through C2 to the Horizontal sweep circuit.

VERTICAL SWEEP CIRCUIT. Three transistors are used in the typical Vertical deflection circuit shown in Fig. 8-11. Of these, one is a *NPN* unit (Q1) serving as a sync pulse amplifier, one is a medium power *PNP* type (Q2) connected as a 60 cycle blocking oscillator, and the last is a "high power" *PNP* unit (Q3) used as a Vertical deflection amplifier; the common-emitter configuration is used in all three stages. In operation, Q1 receives its base bias as well as its input signal from the Sync Separator section, with the interstage coupling resistor (R7, Fig. 8-10) and large input capacitor C1 forming a standard integration network. Emitter resistor R3 serves to stabilize amplifier operation. The amplified Vertical sync pulse

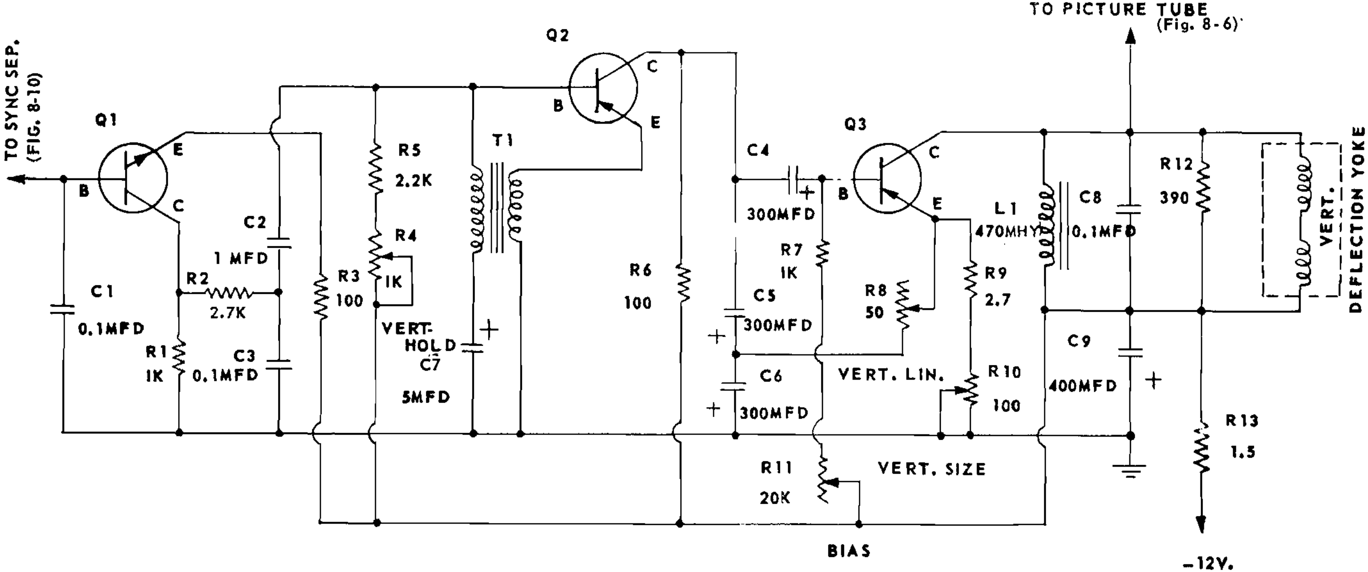

Fig. 8-11: Vertical sweep circuit. This section includes the vertical sync amplifier (Q1), vertical oscillator (Q2), and vertical output amplifier (Q3). The output amplifier is coupled directly to the vertical deflection yoke.

signal developed across Q1's collector load, R1, is applied to a second integration network, R2-C3, and, from here, through D.C. blocking capacitor C2 to Q2's base.

Vertical sweep oscillator Q2 is wired as a conventional transformer-coupled blocking oscillator, with T1 serving to provide the feedback between base and emitter circuits necessary to start and maintain oscillation. Blocking rate is determined by the time constant of the R4-R5-C7 combination; of these, R4 is made variable, thus permitting an adjustment of the basic blocking rate, and serving as the receiver's *Vertical Hold* control. The Vertical sync pulse applied through C2 locks the oscillator on frequency. A blocking oscillator, of course, conducts heavily for a short pulse, and then is cut off for the major portion of its operating cycle. When Q2 is cut off, C5 and C6, in series, are charged slowly through R6; they are discharged quickly when Q2 conducts, forming a 60-cycle saw-tooth signal which is applied through C4 to the Vertical deflection amplifier, Q3. A portion of this signal, appearing across C6, is coupled through *Vertical Linearity* control R8 to Q3's emitter circuit, permitting an adjustment over signal waveform. Q3's base bias is furnished through R7 and R11 in series, with R11 serving as a *Bias Adjustment* control; this adjustment (R11) corresponds roughly to the "Bias Adjustment" controls found in audio amplifiers using power transistors, and serves the same function . . . it permits base bias current to be adjusted for optimum circuit operation in the event the transistor is replaced with another unit having slightly different characteristics. Emitter resistors R9 and R10 also have some control over base bias, and hence on stage gain; R10 serves as the circuit's *Vertical Size* control. In practice, R8, R10, and R11 *all affect both Vertical size and linearity*, and, as a result, these controls must be adjusted together for optimum overall circuit performance.

Q3's collector load is made up of four components connected in parallel . . . choke L1, capacitor C8, resistor R12, and the picture tube's Vertical deflection yoke. Of these, L1 has a very high inductance, but a very low D.C. resistance; thus, it serves to shunt the D.C. component of the amplified deflection signal around the deflection yoke and to prevent picture decentering, but has little or no effect on the sweep signal itself. This is necessary because Q3 is operated essentially as a Class A amplifier and, therefore, has a large D.C. component in its collector circuit. C8 and R12 help shape signal waveform and to limit the amplitude of the transient pulse developed during Vertical retrace; this pulse, of course, is applied to the picture tube as a blanking signal (see Fig. 8-6). Finally, R13 and C9 serve as a decoupling filter in the power supply circuit.

HORIZONTAL SWEEP CIRCUIT. As a general rule, the Horizontal Sweep sections of tube-operated TV receivers are much more complex

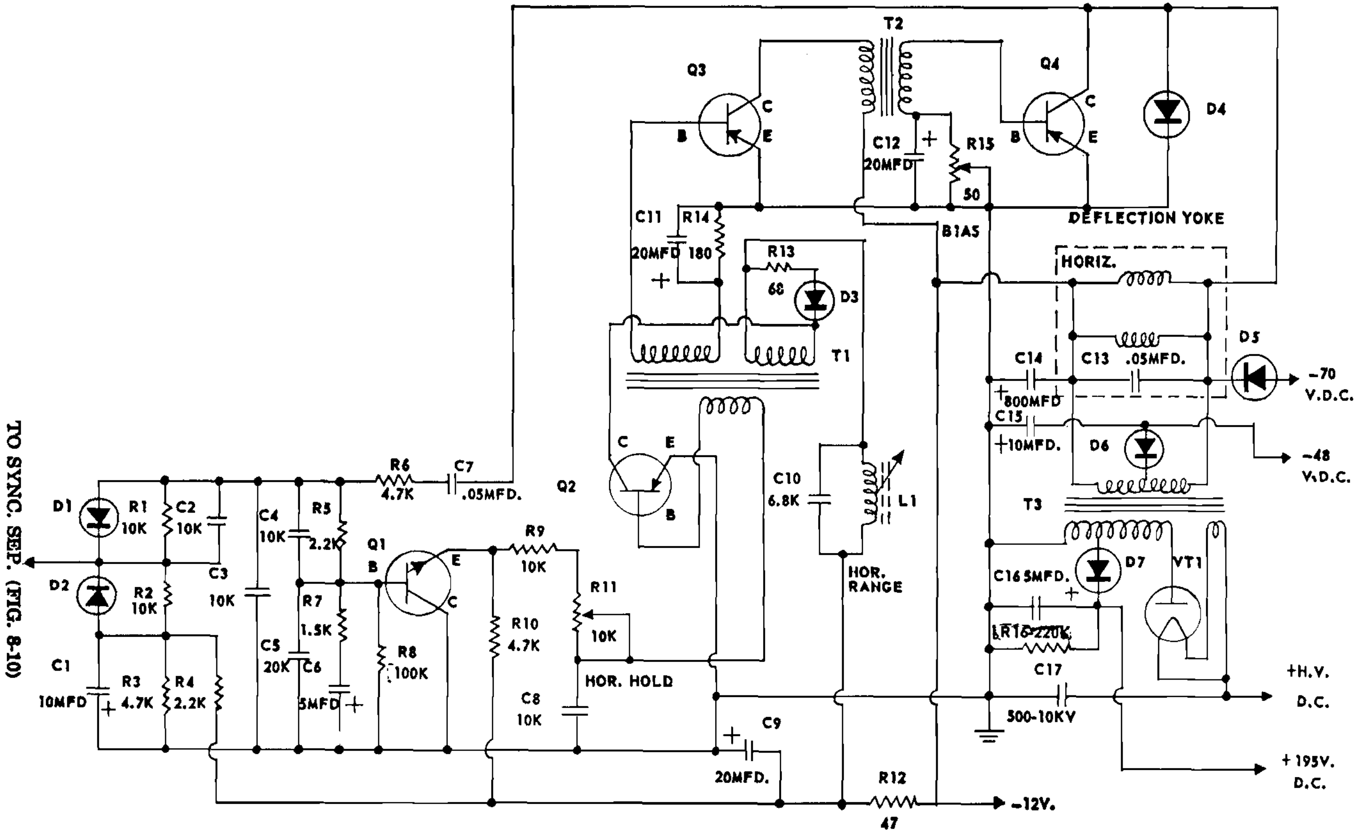

Fig. 8-12: Horizontal sweep circuit. In addition to providing horizontal sweep, this section also provides high voltage (+ H.V.) for the cathode-ray picture tube (CRT), and moderate B voltages for picture tube focusing and the video amplifier (Fig. 8-6).

than their Vertical Sweep circuits; this is the result of the higher sweep frequencies involved (over 15 KC as opposed to 60 cps), the need for more precise synchronization to prevent horizontal "tearing" and to insure immunity from noise pulses, and, finally, the extra jobs which the Horizontal sweep handles in developing a B plus "boost" voltage as well as the very high D.C. voltage required by the cathode-ray picture tube (CRT). It should not be too surprising, then, to find that a similar situation holds true for transistorized TV sets. A comparison of the Vertical sweep circuit given in Fig. 8-11 with the Horizontal sweep circuit shown in Fig. 8-12 reveals the latter to be much more complex, requiring more transistors, diodes, resistors, capacitors, and other components. Referring to Fig. 8-12, four transistors, seven diodes, and one high-voltage rectifier vacuum tube (VT1) is used in the entire sweep circuit. In some sets, the vacuum tube rectifier (VT1) may be replaced by a cartridge-type high-voltage silicon rectifier, with the final determining factor being the relative cost of the two components. Three of the transistors (Q1, Q2, and Q3) are low or medium power units; Q1 is an *NPN* type, Q2 and Q3 are *PNP* units. The final horizontal deflection amplifier, Q4, is a *PNP* power transistor, but the type used here must have better high frequency characteristics than are customary in audio amplifier applications.

In operation, the horizontal sync pulses obtained from the Sync Separator section (through C2, Fig. 8-10) are compared and combined with pulses obtained from the horizontal output stage through blocking capacitor C7 and series resistor R6. This action takes place in diodes D1 and D2, with the resultant D.C. control signal appearing across diode loads R1 and R2, bypassed by C2 and C3. A fixed D.C. bias, obtained from voltage-divider R3-R4, bypassed by C1, is added to the control signal, and the composite D.C. signal is applied through R-C network C4-R5-C5-R7-C6-R8 to the base of an *NPN* transistor, Q1, serving as a common-collector D.C. amplifier. R10 serves as Q1's emitter load, with the amplified signal appearing here applied through R9, R11 and T1's feedback winding to Q2's base. Q2 is used as a conventional transformer-coupled blocking oscillator in the common-emitter configuration, with its blocking or repetition rate determined by three factors . . . (a) the D.C. signal delivered by Q1, (b) the R-C time constant of the R9-R10-R11-C8 network, and, (c), the resonant frequency of a tuned circuit (L1-C10) connected in series with its collector winding. Since the signal delivered by Q1 acts to adjust the Horizontal oscillator's (Q2) basic operating frequency to keep it synchronized with the video sync pulses, Q1 becomes the circuit's *Horizontal AFC* (Automatic Frequency Control) stage. R11 is variable, to serve as a *Horizontal Hold* control, with L1 tuned by a ferrite slug and acting as a *Horizontal* Range adjustment. In practice, these two controls are adjusted in essentially the same manner that corresponding controls are adjusted in tube-operated TV sets. R12 and C9 form a simple "L-type" decoupling filter for the Horizontal AFC and Horizontal oscillator stages.

Blocking oscillator transformer T1 handles three jobs . . . (a) it provides the feedback between Q2's collector and base circuits needed to start and maintain oscillation, (b) it matches circuit impedances, and (c) it delivers an output signal to the base-emitter circuit of *Horizontal driver* Q3. Damping diode D3 and series resistor R13 serve to limit the amplitude of the transient pulse developed by inductive kick when Q2's collector current is cut off suddenly. The signal delivered to Q3 is essentially a narrow positive-going pulse, with pulse-width representing sweep retrace time. Q3, a *PNP* transistor in the common-emitter configuration, is driven to collector current saturation by the relatively low amplitude of the negative-going portion of the applied signal, but is cut off rapidly by the high positive pulse. Self-bias is used in this stage, developed by R14, bypassed by C11.

Q3's amplified output signal is coupled through T2 to *Deflection amplifier* Q4, a *PNP* power transistor in the common-emitter configuration. Q4, like Q3, is driven with a rectangular signal waveform and goes to collector current saturation during the low amplitude, relatively long negative-going period, but is cut off rapidly by the high and narrow positive pulse, thus applying a rectangular signal to the picture tube's horizontal deflection yoke. A rectangular signal applied to this component, which is highly inductive, results in a saw-tooth current through it, developing the desired linear sweep. Self bias is provided for Q4 by R15, bypassed by C12; R15 is made adjustable, serving the familiar function of *Bias adjustment* for the power transistor. D4 serves as the *Horizontal damper* diode, conducting when the yoke winding, shunted by C13, is shock-excited into oscillation as Q4 cuts off; oscillation takes place for but a half-cycle, returning the electron beam (in the CRT) to the left-hand side of the screen before D4 starts conducting. A large bypass capacitor, C14, serves to return the lower side of the yoke winding to circuit ground, placing the yoke essentially in parallel with the damper diode (D4) and deflection amplifier (Q4) as far as A.C. signals are concerned.

As in tube-operated TV receivers, the Horizontal sweep circuit, in addition to providing the CRT's horizontal deflection signal, also serves to provide a number of D.C. operating voltages. In this case, various negative and positive voltages required by the picture tube's electrodes, plus the high anode accelerating voltage, as well as a moderately high D.C. voltage for the last Video Amplifier stage (Q2, Fig. 8-6), are obtained from the circuit. Part of the signal developed across the deflection yoke is applied to transformer T3. The voltage across the entire yoke is rectified by D5 to furnish –70 volts with respect to circuit ground. A tap on T3's primary provides . . . through rectifier D6, filtered by C15 . . .–48 volts to the Video Amplifier. A high A.C. voltage is obtained from T3's step-up secondary winding which, rectified by VT1 and filtered by C17, serves as the CRT's accelerating anode voltage. VT1's filament is heated by a small filament winding on T3; this winding is not needed, of course, if VT1 is replaced by a high-voltage semiconductor diode. An intermediate output voltage is obtained from a tap on T3's secondary, which, rectified by D7 and filtered by C16, is available for the CRT's focusing anode; fixed load resistor R16 serves to stabilize this voltage.

POWER SUPPLY. As a general rule, transistorized TV receivers are operated from rechargeable batteries supplying from 6 to 24 volts, D.C., with perhaps a majority designed to use 12 volt supplies. Power requirements are comparable to those of transistorized Hi-Fi and P.A. systems. Depending on audio output power, the size picture tube used, and other factors, current requirements may range from 500 MA to as high as several amperes (at 12 volts). To conserve battery life and to extend the time between recharging, most portable receivers are designed to use currents of less than 1.0 ampere. A typical battery power pack and its line-operated recharger are shown schematically in Fig. 8-13. Referring to this diagram, the *Charger* circuit is conventional, and includes a line-cord and plug, line fuse, ON-OFF switch (SW1), neon pilot lamp (NE-51) with its current limiting resistor (R1), a step-down power transformer (T1), and a full-wave bridge rectifier made up of four semiconductor diodes (D1, D2, D3, and D4); a current limiting thermistor (TS) is connected in series with the rectifier's output. Connections between the Charger and battery *Power Pack* are made with the usual jack and plug arrangement. The Power Pack itself includes the 12 volt rechargeable battery (B1), a line fuse, the TV set's ON-OFF switch (SW2), and a simple "L-type" decoupling filter, C1-R2, to provide isolated outputs for the receiver's various sections. Any of several types of rechargeable batteries may be used, including familiar lead-acid units, but hermetically sealed nickel-cadmium types are the most popular. The latter type is safer, has a very long life, and can't spill or leak.

Alternate power sources can be used, of course. Zinc-carbon or mercury batteries may be used in place of rechargeable units, or, in some cases, a cord and plug may be provided to permit set operation from an automobile's electrical system; here, the plug is designed to fit the car's cigar lighter receptacle. The battery charger assembly may be built-in or may be a separate unit. In a few instances a line-operated power supply may be used in place of batteries; the circuits employed here are similar to those used as power supplies for Hi-Fi

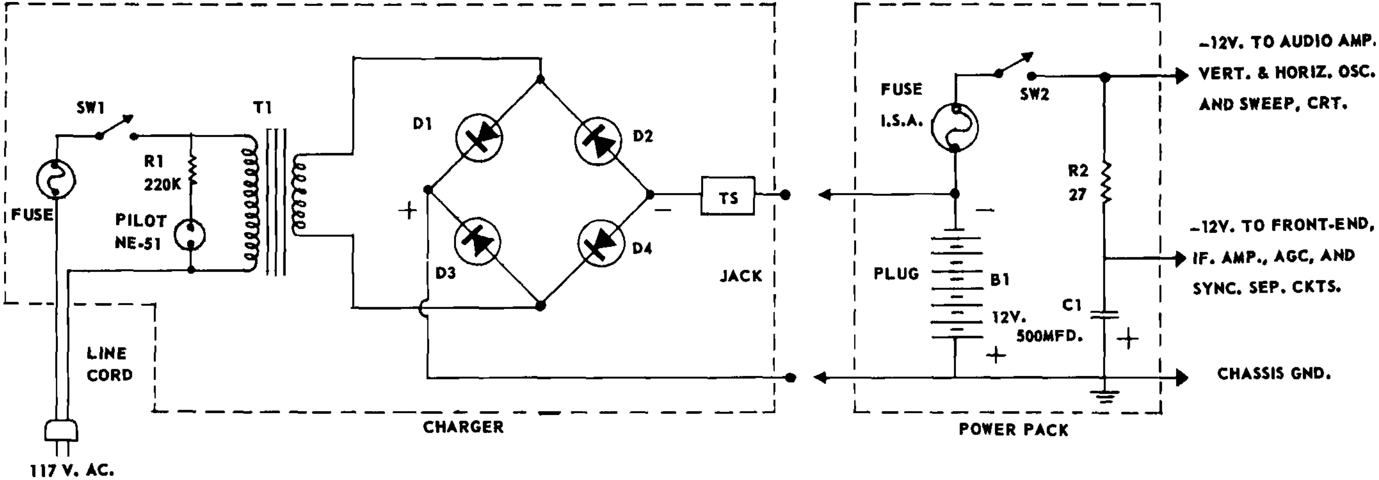

Fig. 8-13: Power supply section. Most transistorized TV receivers are operated from built-in storage batteries. A line-operated battery charger may be built-in or may be a separate accessory.

systems (see Section 3, Figs. 3-14 and 3-15) and differ from charger circuits in that adequate ripple filters are provided. These power supplies, where used, may be serviced as outlined in Section 3 (see Troubleshooting Chart, Table 3-D).

FUTURE DESIGNS. Since fully transistorized TV receivers are just starting to receive wide commercial distribution, the circuits described above are predicated upon current design practice and upon the circuits used in prototype receivers assembled by various semiconductor and television set manufacturers, rather than upon designs in commercial use. Of course, some production TV receivers current use. There's a good chance that production TV receivers will use quite similar arrangements, but individual variations may be encountered from one manufacturer to another, or even from one model to another. In addition, the development of new transistor types may permit the use of simplified circuitry in some sections; for example, the availability of high-gain, high frequency R.F. transistor types could reduce the number of stages needed in the Video I.F. amplifier

Fig. 8-14: A typical AM Interference pattern. The "picture troubles" encountered in transistorized TV sets correspond roughly to those encountered in more familiar vacuum tube sets.

strip. At the same time, new types of semiconductor devices may result in modifications in sweep and deflection circuits. A Unijunction transistor might be used as a sweep oscillator in place of a blocking oscillator employing a conventional transistor. At the present time, of course, Unijunction types, which have operating characteristics roughly analogous to those of a gas-filled *thyratron* tube, find their major application in specialized switching and computer circuits. By the same token, a "high-power" switching unit, such as *GE's Controlled-Rectifier,* might be used to combine oscillator and deflection amplifier functions into a single unit. Such specialized designs are highly theoretical at this time, however, and are of limited immediate interest to the practical technician.

Looking to the more distant future, considerable research is being carried out towards the development of a solid-state "picture" device. This would, in effect, be a semiconductor equivalent to the cathode-ray picture tube; present research is aimed towards developing a "flat" device, an inch thick or less, which operates on relatively low voltages and which could be used in a TV set no thicker than a decorative picture frame, permitting "picture on the wall" TV receiver designs. If this research is successful, greatly modified sweep circuit designs will be used in receivers employing such units, but the TV Tuner, Video I.F., Audio I.F. and Audio Amplifier circuits will probably be quite similar to those discussed above.

Finally, again looking towards future designs, we may expect the introduction of transistorized Color TV receivers. At the present writing, of course, no such receivers are available, and relatively little work has been carried out towards the development of prototype circuit designs. Any estimates as to which will be introduced first . . . transistorized Color TV sets or flat semiconductor picture reproducers . . . are, at the best, pure speculation at this time.

GENERAL SERVICE NOTES

Basically, the repair and maintenance of transistorized TV receivers is not far different from that of tube-operated sets, with the same common-sense procedures being used, and with the operation of the set itself offering the greatest help in pin-pointing a defect to a particular section, stage, or component. Of course, basic test techniques must be modified to permit a proper interpretation of results or to prevent damage to circuit components, as outlined in detail in Section 1. As a general rule, however, the *first* step in servicing a TV set . . . whether tube-operated or transistorized . . . is to check out its overall performance, and then to look for trouble in the sections which are obviously defective. For example, a pattern similar to that given in Fig. 8-14, with sound normal, is probably the result of outside interference . . . from a Ham station or other AM signal source. Similarly, a pattern similar to that shown in Fig. 8-15 usually indicates oscillation in the Video I.F. section; in a transistorized set, this may be caused by one or more open (or partially open) bypass or filter capacitors, by defective shielding, or by improper neutralization . . . in a few instances, misalignment may cause I.F. oscillation but, in a transistorized set, this is less likely than in tube receivers. A pattern similar to that given in Fig. 8-16 is obviously the result of lack of horizontal sync and, if sound is normal, indicates that the trouble is probably in the Sync Separator, Horizontal AFC, or Horizontal oscillator sections; in rare instances, such a complaint may be caused by defects in the receiver's AGC circuit, but, when

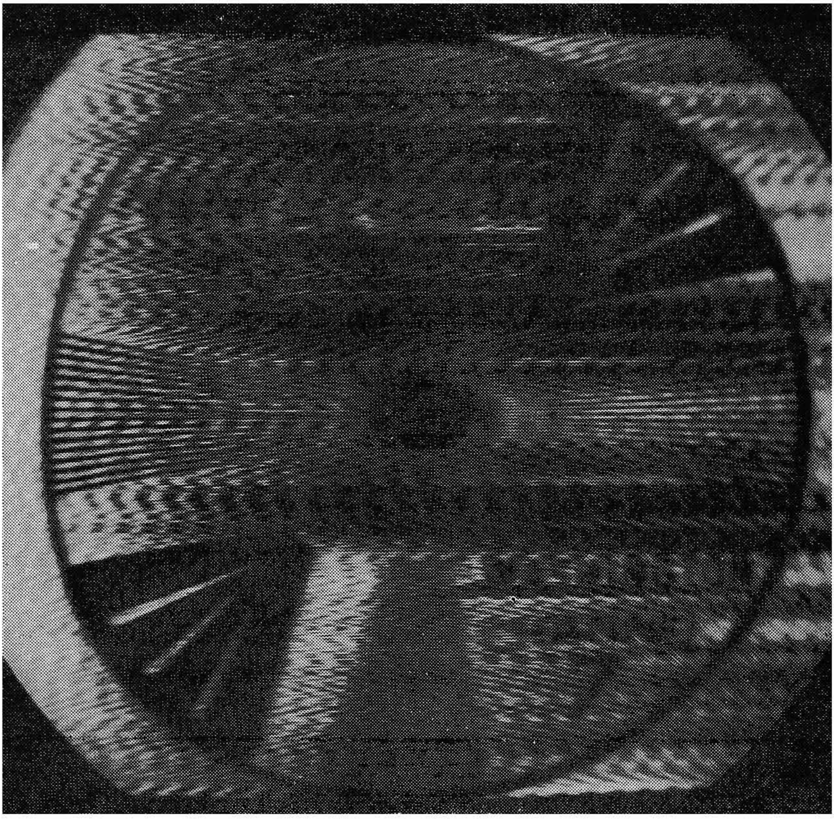

Fig. 8-15: This pattern is the result of oscillation in the video I.F. amplifier strip, and may be caused by misalignment or incorrect neutralization. Poor lead dress or defective shielding are secondary causes.

this happens, there's a good chance that a change in the audio signal will occur at the same time.

Continuing, if a normal picture is obtained, but sound is lacking, we can be sure the trouble is somewhere between the sound take-off and the set's loudspeaker; that is, in the Audio I.F. section, Audio Amplifier, or loudspeaker itself. Here, injecting a test signal into the Audio Amplifier and listening for a sound from the loudspeaker will isolate the trouble to one of these two sections; if the test signal is heard, the defect is in the Audio I.F. section, if not, in the Audio Amplifier or loudspeaker. If the sound is distorted or weak, we would again expect to find trouble in the Audio I.F. or Audio Amplifier sections, with distortion generally caused by a defect in the Audio Amplifier. As in a tube-operated set, the presence of noise or intercarrier "buzz" generally is caused by improper Alignment of the Ratio Detector, a defect in this stage, or poor limiting in the Audio I.F. amplifier(s).

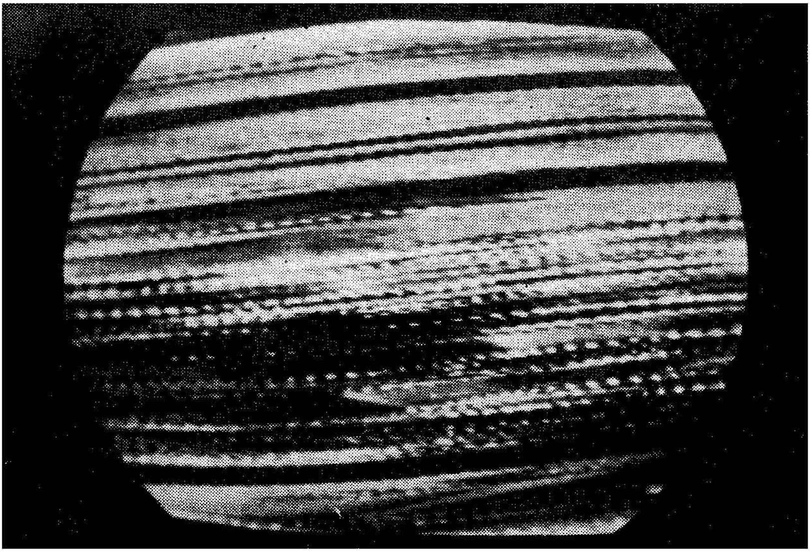

Fig. 8-16: Horizontal "tearing" or complete loss of horizontal sync, as shown by this pattern, may result from a defect in the sync amplifier, horizontal AFC circuit, or horizontal sweep oscillator.

As far as picture "troubles" are concerned, a lack of a picture, but normal sound and raster, indicates trouble between the sound take-off point and the picture tube itself, with all other stages normal. By the same token, a change in picture quality, but with raster and sound normal, indicates a defect in the same stages; typical complaints here are *poor definition, lack of contrast, excessive contrast,* and so on. Poor definition, of course, also may be caused by improper I.F. Alignment. If the raster is distorted either Vertically or Horizontally, we would look for trouble in the Vertical or Horizontal sweep circuits, respectively. Similarly, a lack of sync Vertically (*picture "rolling"*) or Horizontally (*picture "tearing"* or *"slanted"*) indicates a defect in the Vertical or Horizontal oscillator or sync circuits, while an overall lack of sync points to a possible defect in the Sync Separator section. Normal sound, but the absence of picture and raster points to a defect in the Horizontal sweep or High-voltage circuits, or a defective CRT.

Overall troubles . . . those affecting picture, sound, and raster . . . are caused by defects in circuits common to the entire receiver. A lack of picture, sound, and raster generally means a power supply defect . . . a bad switch, "dead" batteries, or a blown line fuse. If picture and sound are absent, but a normal raster is obtained, the defect is probably ahead of the sound take-off point; that is, between this point and the set's antenna. Here, we would suspect trouble in the "Front-End" or Video I.F. strip and would make a quick preliminary check by turning to other channels, for it is possible that a defect in the Tuner section (such as a defective turret switch) will "kill" one channel. Similarly, if sound and picture are both *"weak"* (picture lacks contrast and sync poor), but the raster is normal, we would look for trouble in the Video I.F., Tuner, or Antenna circuits.

There are a few defects which may affect the entire receiver even though the defect itself is located in an isolated section. For example, an open decoupling capacitor in the Audio Amplifier section might affect picture quality and sync, particularly where Class B audio power output stages are employed; as you may recall, a Class B amplifier's power requirements vary with signal amplitude and a strong signal can call for a healthy "slug" of current from the power supply. By the same token, open decoupling or bypass capacitors in any stages employing power transistors (such as the Vertical and Horizontal deflection amplifiers) may affect overall set operation. Generally, a practical analysis of the set's operation will give a good clue as to the type of defect to look for. Open decoupling or bypass capacitors can be checked quickly by shunting these units with a replacement known to be in good condition (see *Substitution Tests,* Section 1).

The following Service Notes, which apply specifically to transistorized TV sets, will prove useful to the practical service technician.

1) **ADJUSTMENTS** – Many of the semi-fixed adjustments found in transistorized TV sets correspond to those found in conventional tube-operated receivers, and are adjusted in approximately the same way. Included here are the *Horizontal Hold, Horizontal Range, Ver-*

tical Hold, Vertical Size, and *Vertical Linearity* controls; due to the nature of transistor circuits, however, there may be greater interaction between adjustments in the same section than is found in tube sets, with the result that a "back-and-forth" adjustment procedure must

STEP	TEST PROCEDURE
1	Confirm complaint – Check operation of receiver in customer's home. Make sure customer has described complaint correctly. (a) If complaint may be caused by a poor signal or external interference...for example, ghosts, weak signal, snow, interference bars or patterns, etc...go to Step 2. (b) If complaint is "dead," "weak," check Power Pack (battery and/or charger) for normal D.C. output voltages. Go to Step 3. (c) If sound is normal, no picture or raster, check CRT, then go to Step 3. (d) If complaint is horizontal or vertical tearing or "roll," lack of brightness, poor focus, off-center picture, check semifixed adjustments. If condition cannot be corrected, go to Step 3.
2	Check antenna system – Make sure lead-in is in good condition, with no intermittent shorts or opens; check antenna orientation. If practicable, check receiver with substitute antenna known to be in good condition. If trouble persists, go to Step 3.
3	Preliminary isolation tests – If complaint cannot be cleared up in customer's home by readjustment of semi-fixed controls, repair of antenna system, or replacement of a plug-in component, receiver should be taken to shop for bench tests. Isolate trouble to defective section by analysis of complaint and reference to troubleshooting charts. Then go to Step 4. (a) If complaint is "dead" or "weak," refer to Table 8-B. (b) If complaint is "tuning trouble," refer to Table 8-C. (c) If complaint is "noise," "oscillation," or "interference," refer to Table 8-D. (d) If complaint is "distortion" (picture or sound), refer to Table 8-E. (e) If complaint concerns raster formation or horizontal or vertical sync, refer to Table 8-F.
4	Stage isolation tests – After preliminary isolation of defect to specific section, isolate trouble to single stage within that section using standard test methods. Refer to Section 1. After isolating trouble to single stage, go to Step 5. (a) If no other test equipment available, use Multitester to check electrode voltages within defective section. (b) If Signal Generator is available, Signal Injection tests may be used to isolate trouble in audio (sound) sections, video amplifier, I.F. strip or Front-End (Tuner). (c) If Oscilloscope is available, Signal Tracing technique may be used to isolate trouble in audio amplifier, video amplifier, sync, and horizontal and vertical sweep sections. Same technique may be used to isolate trouble in audio I.F., video I.F., and Front-End if R.F. Detector probe is used.
5	Component isolation tests – With defect isolated to specific stage, D.C. operating voltages and components may be checked in that stage to isolate to a specific part. Coils, transformers may be checked for "opens" or "shorts" with an Ohmmeter (power off, transistors removed from sockets). Capacitors may be checked for leakage with an Ohmmeter (or Voltmeter and source of D.C. voltage), for "opens" by substitution. With defective part isolated, replace or repair, and check-out receiver's overall performance.

TABLE 8-A: GENERAL TROUBLESHOOTING CHART — Follow the general procedures outlined here when servicing transistorized TV receivers. Use this Chart in connection with the specific trouble Charts given in Tables 8-B, 8-C, 8-D, 8-E and 8-F.

be used, with the interacting controls finally set for optimum overall performance. In addition to the expected adjustments, a *Bias Adjustment* is generally provided wherever power transistors are used, whether in the Audio Amplifier, Vertical Sweep, or Horizontal Deflection circuits. This control is readjusted whenever it is necessary to replace the transistor which it affects, and serves to compensate for differences in the operating characteristics of individual transistors. *Improper adjustment here may ruin the transistor,* or may cause such complaints as "weak operation," "distortion," or, in sweep circuits, "poor linearity." As a general rule, follow the set manufacturer's recommendations when making this adjustment. In sweep circuits, the *Bias Adjustment* may have to be set in conjunction with *Size* and *Linearity* controls due to interaction between these components.

2) **ALIGNMENT** – The TV Tuner, Video I.F., Audio I.F., FM Detector, and Traps found in transistorized sets are aligned in much the same way as corresponding circuits in tube receivers, but with care taken to avoid overloading individual stages (see Section 1). Either "peak" or "sweep" Alignment techniques may be used, depending on the individual set design and the manufacturer's suggestions. Essentially the same test instruments are employed. There is one important variation in Alignment technique that may be encountered in some receivers; since transistors are basically low impedance devices, they tend to load tuned circuits to which they are connected, reducing circuit "Q" and broadening the resonant circuit's overall response. As a result, some TV sets employ Video I.F. sections in which the necessary bandwidth is obtained by this loading action alone and, here, all Video I.F. transformers *are peaked to the same frequency*. Thus, the Alignment procedure used in such receivers corresponds closely to that employed for aligning AM Broadcast-Band receivers.

3) **CURRENTS** – As in servicing other types of transistorized equipment, transistor electrode currents often provide a more important clue to circuit operation than do operating voltages. To make such tests, however, it is necessary to "open" the circuit and to insert the current meter (Milliammeter or Microammeter) *in series,* observing proper D.C. polarities. In a few instances, the D.C. resistance of the test instrument itself may be enough to affect circuit operation, particularly in power transistor stages; to avoid trouble, then, a large bypass capacitor may be connected in parallel with the meter's terminals, reducing its effect on signal currents. A preliminary check of overall current requirements is useful before regular test techniques are used; this can be done by inserting an appropriate current meter in series with one of the power supply leads. An excessively high

current indicates the possibility of a shorted or "leaky" transistor, or of a leaky or shorted bypass capacitor.

4) **TRANSISTOR REPLACEMENT** — A good general rule is to suspect a defect in a transistor *last*, checking other components first. An exception here is where preliminary tests (such as an overall

COMPLAINT	TROUBLE PROBABLY IN THESE SECTIONS																See Figure Number	NOTES
	Power Supply	Antenna Ckt.	Front-End	I.F. Strip	1st Video Amp.	2nd Video Amp.	AGC Ckt.	Audio I.F.	Ratio Detect.	Audio Amp.	Sync. Sep.	Vert. Sweep.	Horiz. Sweep	Med. B Supply	High Voltage	CRT		
Dead overall – No picture, no sound, no raster	*																8-13	
Pix missing – Sound, raster normal, no picture.						*								●			8-6	
Pix missing – Sound normal, no picture or raster													●	●	*	*	8-6 8-12	
Sound dead – Picture normal but no sound.								●	●	●							8-8 8-9	
Weak overall – Sound low, pix dim, contrast poor.	*																8-13	
Weak overall – Poor sensitivity; bright raster, but pix snowy, sound weak and noisy.		*	●	●			●										8-4 8-5	Alignment?
Weak picture – Sound normal, pix contrasty, raster dim.														●	*	*	8-6 8-12	
Weak picture – Sound normal, raster bright, pix lacks contrast.						*								●			8-6	
Sound weak – Raster and pix normal.								●	●	●							8-8 8-9	Alignment?

TABLE 8-B: "DEAD" AND "WEAK" COMPLAINTS TROUBLESHOOTING CHART — As in earlier troubleshooting tables, the more common defects or sources of trouble are identified with an asterisk (*).

current check) leads you to suspect a shorted or leaky unit. Where power transistors are replaced, it is generally necessary to readjust a semi-fixed *Bias Adjustment* (see above). If transistors used in push-pull circuits are replaced, it is often necessary to replace *both* at the same time with a *matched pair,* even though only one may be defective. The "good" unit can be saved for use in single-ended amplifier and driver stages using the same type. Transistor replacement in R.F. or I.F. circuits may call for realignment and, in a few instances, in a readjustment of the neutralization feedback capacitor's value; suspect the latter if oscillation results when the new transistor is installed. Finally, if the transistor is soldered in position (rather than inserted in a socket), use a *heat sink* (see Section 10) and take care to avoid heat damage both when removing and replacing the unit.

5) **VOLTAGES** – D.C. Voltage checks are useful in tracking down circuit defects, but must be interpreted with caution. Remember that base bias voltages, in many cases, may be but a small fraction of a volt. Watch, too, for polarity differences in circuits using *PNP* and *NPN* transistors. As in servicing tube-operated receivers, use an adequate High Voltage Probe when making tests in the Horizontal Deflection circuit.

6) **WAVEFORMS** – If care is taken to avoid A.C. leakage (see Section 1), an Oscilloscope may be used to good advantage for Signal Tracing in transistorized TV sets, particularly in the Video, Sync, and Sweep sections. The waveforms observed should be compared with those given in the individual receiver's Service Manual, with differences indicative of possible trouble in the circuits being checked. Always make sure that the test signal used (whether obtained by tuning in a TV Channel or from a Signal Generator of some type) does *not* overload the circuits, for this may cause waveform distortion in itself; make sure, too, that all semi-fixed adjustments are correct, and that proper supply voltages (currents) are supplied to the receiver. In general, the signal waveforms encountered in the Video 2nd Detector, Video Amplifier, and Sync Separator circuits will be similar in all sets and will correspond to those found in related circuits in tube receivers. Signal waveforms in sweep and deflection circuits, particularly in the Horizontal AFC circuit, may vary from one receiver to another, however, depending on the exact circuit arrangement used.

TROUBLESHOOTING CHARTS

Designed to apply to all types of transistorized TV sets, regardless of individual circuit variations, the Troubleshooting Charts given in Tables 8-A, 8-B, 8-C, 8-D, 8-E, and 8-F will help you to cut diagnosis

COMPLAINT	TROUBLE IN					CHECK FOR							NOTES
	Antenna Ckt.	R.F. Stage (s)	Mixer	Local Osc.	Video I.F.	Oscillator Misaligned	Oscillator Dead	I.F. Strip Misaligned	Defective Bandswitch	Defective Transistor	Antenna not Oriented	Defective Lead-in	
Tunes only low or high band channels.			●	*		●	*		●	●			
Noisy when changing channels; streaks, flashes.		●	●	●					*				
Channel tuned only at end of fine tuning control.				*	●	*		●					
Ghosts on some channels.	*	●	●								*	*	
Good picture and sound do not coincide.			●	●	●	●		●					
Intermittent on some channels.				●					●	●			

TABLE 8-C: "TUNING" COMPLAINTS TROUBLESHOOTING CHART — Use this Chart as a guide when the complaint involves tuning difficulties.

COMPLAINT	TROUBLE IN							WATCH FOR								NOTES
	Power Supply	Front-End	Video I.F.	Video Amp.	Audio I.F.	Ratio Det.	Audio Amp.	Misalignment	Trap Adjust.	Open filter	Open by-pass	Defective Shielding	Poor lead dress	Microphonic Components	Defective Transistor	
Noise in sound channel	●				●	●	●	*		●	●	●	●		●	
Intercarrier buzz in sound			●	●	●	*		*	*	●	●	●	●			
Squeals on high volume					●		●						●	*	●	
Sound oscillation	●				●		●	●		●	●	●	●			
Streaks, dots in picture	●	*	●	●				●	●	●	●	●			●	
Sound bars in picture	●		●	●				●	●	●	●		●	●		
Grain in picture			●	*				●	●			●	●			
Multiple images			●	●				●			●	●	●			Video amp. load
Interference pattern		*	*					*	●		●	●				

TABLE 8-D: "NOISE" AND "INTERFERENCE" TROUBLESHOOTING CHART — Use this Chart as a guide when the complaint involves the presence of an undesired signal in either the picture or audio sections. If the complaint is "interference," FIRST make sure it isn't coming from an external source (such as an amateur radio transmitter) BEFORE attempting to troubleshoot the receiver itself.

COMPLAINT	CHECK THESE							WATCH FOR										
	Audio I.F.	Ratio detect.	Audio amp.	Video I.F.	Video detect.	Video amp.	CRT	Misalignment	Open peaking coil	Open by-pass capacitor	Leaky by-pass capacitor	Open coupling capacitor	Leaky coupling capacitor	Lo gain transistor	Leaky transistor	Gassy or leaky CRT	Centering magnet off.	
Sound weak and distorted	●	●	●					●			●		●	●	●			
Sound distorts on peaks	●		●								●		●	●	●			
Poor Audio frequency res.	●		●	●	●	●		●	●	●		●						
Poor definition				●	●	●	●	●	●	●	●			●	●			
Picture smeared				●	●	●	●	●		●	●		●		●	●		
Picture too contrasty				●		●	●				●		●		●	●		
Picture lacks contrast				●	●	●	●	●		●	●		●	●		●		
Out of focus						●	●				●		●			●		
Off center (Ion trap OK)							●										●	
Reversed picture					●	●	●						●	●	●	●		

TABLE 8-E: "DISTORTION" COMPLAINTS TROUBLESHOOTING CHART — Use this Chart as a guide when the complaint is of the general form . . . "the receiver works, but not quite right." If the raster, rather than picture quality, is distorted, refer to Table 8-F.

COMPLAINT	CHECK IN THESE SECTIONS											WATCH FOR								
	Sync. Stripper	Sync. Sep.	Sync. Amp.	Vert. Sync. Amp.	Vert. Osc.	Vert. Output	Horiz. AFC	Horiz. Osc.	Horiz. Driver	Horiz. Output	Damper	Leaky transistor	Lo gain transis.	Defective diode	Defective yoke	Improper bias	Defective capacitor	Defective transformer	Yoke leads interchanged	
Vertical line only										●					●					
Horizontal line					*	*						●	●		●	●	●	●		
Spot						●				●					●					
Tears Hor. and Vert.	●	●	●									●	●			●	●			
Tears Horizontally only							●	●				●	●	●		*	*	●		
Tears Vertically (rolls)				●	●							●	●			*	●	●		
Width incorrect								●	●	●	●	●	●	*	●	●	*	●		
Height incorrect					●	●						●	●		●	●	●	●		
Horizontal fold								●	*	*	●	●	●	*	●	*	*	●		
Vertical fold					●	*						●	●		●	*	*	●		
Poor Hor. linearity								●	*	*	●	●	●	●	●	*	●	●		
Poor Vert. linearity					●	*						●	●		●	*	●	●		
Picture reversed (LR,UD)																			*	

TABLE 8-F: SWEEP COMPLAINTS TROUBLESHOOTING CHART — This Chart is used as a servicing guide when the complaint involves either the horizontal or vertical (or both) sweep circuits. As before, more common sources of trouble are identified with an asterisk (*).

time to a minimum and, often, will guide you directly to the defect causing a particular service complaint. Table 8-A outlines, in Step-by-Step form, basic servicing procedure; it is used in conjunction with the other Charts to track down defects to specific stages or parts. Table 8-B lists common *"dead"* or *"weak"* complaints, indicating in which stages the troubles may be located, and referring back to specific circuits which may be used in those stages. Table 8-C gives typical *"tuning"* complaints, indicating not only the stage where the trouble may be located, but common defects which may cause each complaint. Table 8-D is similar, but applies to various *"noise"* or *"interference"* troubles in both the audio and video circuits. Continuing, Table 8-E lists common sound and picture *"distortion"* complaints, indicating which stages to check and what type of defects to expect. Finally, Table 8-F applies specifically to *sweep* and *sync* troubles. In addition to these Charts, several of the Troubleshooting Charts given in earlier Sections may be used to advantage. For example, for troubles in the Audio Amplifier section, you can use the Charts given in Section 3. If trouble is encountered with a battery *charger* circuit, you'll find Table 5-N (Section 5) useful, while defects in line-operated power supplies may be isolated by using Table 3-D (Section 3) as a guide.

Section 9

SERVICING SPECIAL TYPES OF EQUIPMENT

TROUBLESHOOTING AND REPAIR techniques applicable to audio amplifiers, portable and table model receivers, car radios, and TV sets have been discussed in detail in earlier Sections. The maintenance of such equipment will constitute perhaps as high as 85% to 95% of the repair jobs handled in the typical service shop, at least for a while. However, transistors and related semiconductor devices are being used in increasing quantities in other types of electronic apparatus. Before long, service technicians will be called on to repair this equipment, and, in time, the average worker may find that such repair jobs will represent an increasing percentage of his daily work load. The time to prepare for this specialized work, of course, is *before* the first such job comes across the service-bench. Many technicians may wish to become *specialists,* handling only one general type of equipment. The opportunities here are endless. The man who likes a steady job with a large firm can specialize in the repair of transistorized industrial control or test instruments, handling such work as a full-time factory technician. An independent operator, on the other hand, may wish to solicit only a specific type of work, such as the repair of Radio Navigators (or Direction Finders) and related Marine electronic equipment. Similar opportunities await the technicians who specialize, say, in the repair of Atomic Test Equipment, in the maintenance of Power Supply gear, or in the service and calibration of transistorized Test Instruments.

The many, many applications in which transistors may be used, plus the limited space available in a single volume, prohibits our discussing special types of transistorized equipment in great detail. However, as we shall see, the circuits used in all types of electronic equipment, with but a few exceptions, are basically similar to the circuits examined and studied in earlier Sections. In any case, the basic Test Equipment needed and Troubleshooting Techniques employed are essentially the same, regardless of the specific functions of the equipment being serviced; in general, too, the same hand and shop tools, skills, and physical repair methods are employed. As you may recall, we discussed the "Universal" application of basic techniques in some detail in Section 1 (refer to sub-section entitled "UNIVERSAL" TROUBLESHOOTING CHARTS).

Fig. 9-1: REGENCY's CD-2 Conelrad Monitor — a typical special purpose receiver.

SPECIAL RECEIVERS

While the great majority of the transistor's radio receiver applications are found in Broadcast-Band, Short-Wave, and Television sets, this component is used extensively in the manufacture of special purpose receivers, tuners, and converters. In the future, the transistor's applications in this field will probably increase considerably, particularly with the introduction of newer transistor types and with the increasing use of Radio Communication services in all fields. Most of the special receivers encountered in service work are basically adaptations of the circuits discussed in Sections 5, 6, 7 and 8. As a general rule, most sets will be superhets and will differ from the circuits discussed earlier only in their R.F. sections and in the exact I.F. value used; even here, the differences will be minor. For example, a receiver designed for a specific communications service may be fixed-tuned to three or four separate channels, with individual preset trimmer capacitors or coils used in the Antenna, R.F., and Converter stages; in this case, various communication "channels" will be selected by rotating a three or four-position selector switch rather than by adjusting a continuous tuning control. Let's discuss typical special-purpose receivers.

CONELRAD RECEIVER. To prevent a potential enemy's guided missiles from "homing" in on our major cities by using known Broadcast Station signals as guide beans, our national Civil Defense agencies have established a plan for the *Control of Electromagnetic Radiation.* Known briefly as *Conelrad,* this calls for *all* radio stations to go off the air in the event of a nationwide alert. Afterwards, emergency instructions will be broadcast to the general populace by standard AM Broadcast Stations on either 640 or 1240 KC, with different stations taking over in sequence so that no single station is broadcasting for any considerable length of time and can be used by a missile as a "homing" beam.

The Regency Model CD-2 Conelrad Monitor Receiver, shown in Fig. 9-1, is designed specifically for use in the event of a Conelrad alert. Combining both alarm and receiver facilities in a single unit, it is designed to emit an audio tone when the broadcast station to which it is tuned goes off the air, but to remain absolutely quiet otherwise. At the same time, however, the device may be used as a

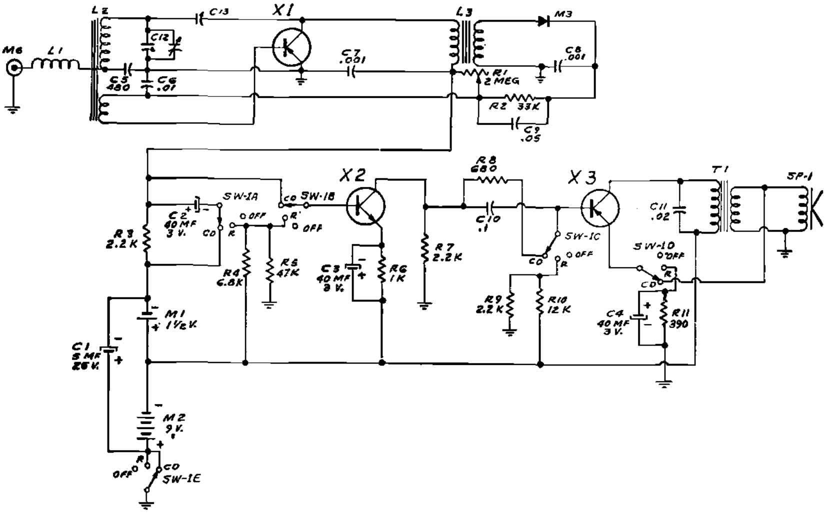

Fig. 9-2: Schematic wiring diagram of the CD-2 receiver. Only three transistors are used in this combination automatic alarm and emergency radio.

standard AM Broacdast-Band receiver simply by turning its control switch to the proper position; thus, it may be used to sound an Alarm in the event of a CD alert and, afterwards, as a regular receiver to listen for Conelrad emergency broadcasts. The CD-2's schematic diagram is given in Fig. 9-2, with its *Set-up Procedure* given in tabular form in Table 9-A. Powered by a 1.5-volt penlight cell and

STEP	PROCEDURE
1	a. In regular or weak signal areas, or for mobile use, connect external antenna to jack on rear of receiver. b. In strong signal areas, or where no antenna is available, loosen thumb screw on right side of case and slide antenna coil as far back as possible, then retighten screw.
2	a. Turn function switch to RADIO position.
3	a. Turn REGENERATION control down. b. Tune to strongest local station, preferably one with 24 hour schedule.
4	a. Turn REGENERATION control up until set squeals, then adjust down until squealing just stops. b. Retune station and readjust REGENERATION control.
5	a. Turn function switch to CD position.
6	a. In event of CONELRAD alert, receiver will emit an alarm tone. b. With alarm tone, turn function switch to RADIO position. c. Tune to 640 or 1240 KC and readjust REGENERATION control as in Step 4.

TABLE 9-A: Set-up procedure for the CD-2 receiver.

a 9-volt battery, the set uses one *NPN* and two *PNP* transistors and has two operating modes: CD (Alarm) and R (Receiver). Either may be selected by the 5 pole-3 position combination *Power* and *Function* switch, SW1. Normally, the set is turned to CD and left on at all times.

When the control switch is in its CD position, as shown in Fig. 9-2, X1 serves as a regenerative R.F. and reflexed control amplifier, with regeneration provided by C13, connected between its collector and the tuned input circuit. X1's amplified R.F. output is coupled through L3 to diode detector M3, with both the A.C. (audio) and D.C. components of the detected signal *coupled back through* X1 and, after amplification, appearing across load R3, with the audio signal bypassed by C2. This *D.C. signal* is direct-coupled to X2, which provides further amplification and thus controls the bias applied to X3's base. X3 is connected as an audio oscillator, with feedback obtained from T1's secondary and coupled back to the emitter circuit; T1, of course, also serves as an impedance matching transformer to drive the built-in PM loudspeaker SP-1. Although X3 is wired as an oscillator, *oscillation is prevented* by the low base bias permitted by X2. When the station to which the receiver is tuned goes off the air (during an alert), there is no longer a D.C. control bias applied to X2, and this, in turn, allows normal bias to be applied to X3; thus oscillation is permitted, and an audible *alarm* tone is emitted by the loudspeaker. This alarm will continue until SW1 is switched to its "Receiver" (R) position.

Circuit operation is very similar when SW-1 is in its "Receiver" position (R), except that capacitive coupling is used between stages, permitting only the *audio component* of the detected R.F. signal to be amplified by X2 and X3, with X3 used as an audio output stage and no longer connected as an oscillator. C2 serves to couple the amplified audio signal appearing across X1's load resistor R3 to X2, with X2's amplified output signal, in turn, coupled to X3 through C10. Under these conditions, normal bias is applied to X2 through voltage-divider R4-R5 and to X3 through R9-R10, stabilized by emitter resistor R11, bypassed by C4. The common-emitter configuration is used in all stages regardless of mode of operation.

The CD-2 may be serviced using standard procedures. The most common service complaints are those resulting from improper adjustment, incorrect tuning, or weak batteries. A general Troubleshooting Chart applying specifically to this radio is given in Table 9-B.

RADIO-PHONOGRAPH. The typical transistorized radio-phonograph uses a circuit virtually identical to those found in standard AM Broadcast-Band receivers. As we have seen (Section 5), some multiband portable sets are equipped with a "Phono" jack. However, up till now relatively few transistor-operated radio-phonograph models have been introduced and these, in turn, have received rather limited distribution. For this reason, then, the radio-phonograph may be considered as a "Special" receiver. Since the circuits used in these instruments are very like those employed in conventional rceivers, the same Troubleshooting techniques apply to both, and the Troubleshooting Charts given in Section 5 may be used to advantage for isolating defects.

Including here for general reference purposes, the schematic diagram of the Rockland Radio-Phonograph given in Fig. 9-3 represents typical circuitry. Except for the "Radio-Phono" switch, SW2, the phono pick-up, and the turntable motor, the circuit is typical of those found in 6-transistor receivers. *PNP* transistors in the com-

PROBABLE DEFECTS → COMPLAINT ↓	Batteries weak	Antenna Connection	Tuning Off	Regeneration off	SW1 defective	C1 (open)	C1 (leaky)	C2 (open)	C2 (leaky)	C10 (leaky)	X1 (leaky)	X2 (leaky)	X3 (leaky)	X1 (weak)	X2 (weak)	X3 (weak)	NOTES
Radio dead or weak	*	*	*	*	●		●	●						●	●	●	
Squealing on "Radio"				*		●											
Alarm on continuously		*	*	*							●	●	●				
Alarm doesn't work	*						●		●					●	●	●	
Interference		*	*	*		●											
Audio distortion	*						●		●	●	●	●	●				

TABLE 9-B: GENERAL TROUBLESHOOTING CHART — Model CD-2 Conelrad Monitor. As in earlier charts, more common defects are identified with an asterisk (*).

mon-emitter configuration are used in all stages. R.F. signals picked up by tuned loop antenna coil L1 are converted into an I.F. signal which, in turn, is amplified by two transformer-coupled I.F. stages. Standard neutralization techniques are used in each stage. The I.F. signal is detected by a standard diode-type 2nd detector, with the D.C. component applied to the 1st I.F. amplifier as an AVC control signal and the A.C. (audio) component applied through SW2 to the *Volume* control, R23, and, from here, to the 1st audio amplifier. This

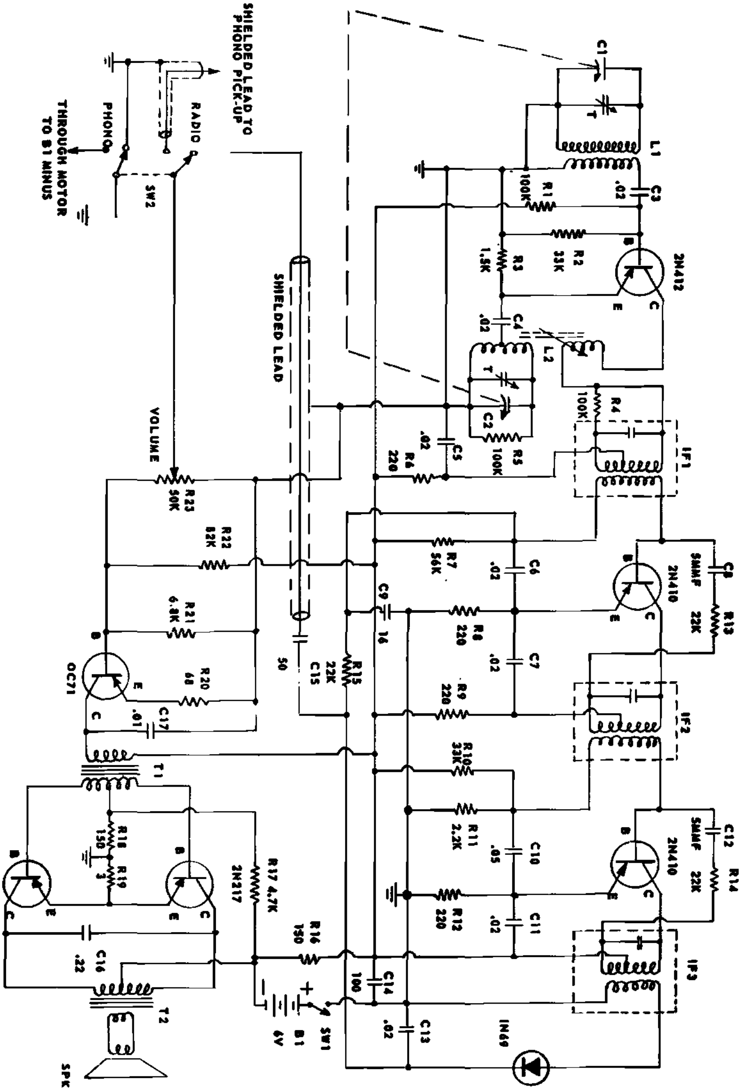

Fig. 9-3: Schematic wiring diagram of the ROCKLAND transistorized radio-phonograph.

COMPLAINT	PROCEDURE	NOTES
Radio, phono "dead"	Check batteries, SW1, then stage voltages.	If batteries, voltages O.K., use Signal Injection tests.
Radio normal, phono dead or weak	Check phono cartridge, SW2.	If both O.K., look for short in shielded lead.
Radio normal, phono noisy	Check phono cartridge, needle, shielding, by-pass C14.	If noise only while motor runs, check for excessive arcing of motor brushes.
Radio normal, phono distorted	Check phono cartridge, needle.	Make sure test record is O.K.
Overall distortion (Radio and phono)	Trouble is in audio amplifier.	Troubleshoot as outlined in Section 3.
Radio and phono weak	Check batteries, then troubleshoot as conventional receiver.	Refer to Section 5.
Turntable trouble – slow, erratic, etc.	Check batteries, turntable bearing, drive wheel, motor.	Mechanical trouble.
Phono normal, radio weak or dead	Trouble in R.F. or I.F. stages, switch to Radio position and treat as receiver.	Refer to Section 5.
Phono normal, interference on radio	Check receiver alignment, then troubleshoot as conventional receiver.	Refer to Section 5.

TABLE 9-C: GENERAL TROUBLESHOOTING CHART — TRANSISTORIZED RADIO-PHONOS. This may be used as a general guide for servicing any transistorized radio-phonograph, not just the unit shown in Fig. 9-3. Generally speaking, service procedures and common defects encountered in radio-phonograph maintenance (except for mechanical turntable troubles) are identical to those encountered in portable receiver servicing . . . see Section 5.

stage drives a push-pull Class B output amplifier through T1, and the output stage, in turn, is coupled to a PM loudspeaker through impedance matching output transformer T2. When SW2 is thrown to its "Phono" position, the audio section receives its input signal from a standard phonograph pick-up cartridge. Operating power is furnished by four flashlight cells connected in series to supply 6-volts (B1) and controlled by a SPST "ON-OFF" switch, SW1.

As a general rule, radio-phonographs are easier to troubleshoot than standard receivers, for the "Radio-Phono" switch serves as a convenient means for checking the "Radio" and "Audio" sections independently. If desired, the audio section may be serviced using conventional audio amplifier test techniques, as outlined in Section 3. The Troubleshooting Chart given in Table 9-C applies specifically to radio-phonographs and may be used in conjunction with the detailed Troubleshooting Charts given in Sections 3 and 5.

RADIO NAVIGATORS. Used by yachtsmen, hunters, fishermen, campers and aviators, the *Radio Navigator* or *Radio-Direction Finder* is basically a long-wave (200 to 400 KC) radio receiver equipped with a highly directional rotatable loop antenna and with visual means (such as a meter) for indicating station signal strength. Often, these units will have more than one band, with the AM Broadcast-Band or various short-wave bands tuned as well as the 200-400 KC band; this band, of course, covers the station frequencies used by Marine Radio Beacons, Aircraft Range and Airport stations. In operation, the loop antenna is rotated for either a *peak* (maximum) or *null* (minimum) signal pick up, as indicated on the visual device; generally, a null indication is used, as this is much sharper than the peak reading. Station bearing is then indicated by a dial coupled to the loop antenna assembly. Maximum pick up is obtained when the loop's plane is at right angles to the station's antenna system; minimum when it is pointing towards the station.

Fig. 9-4: The HEATH Model DF-2 Radio Navigator—basically a two-band transistorized receiver, this type of set is used extensively in marine installations.

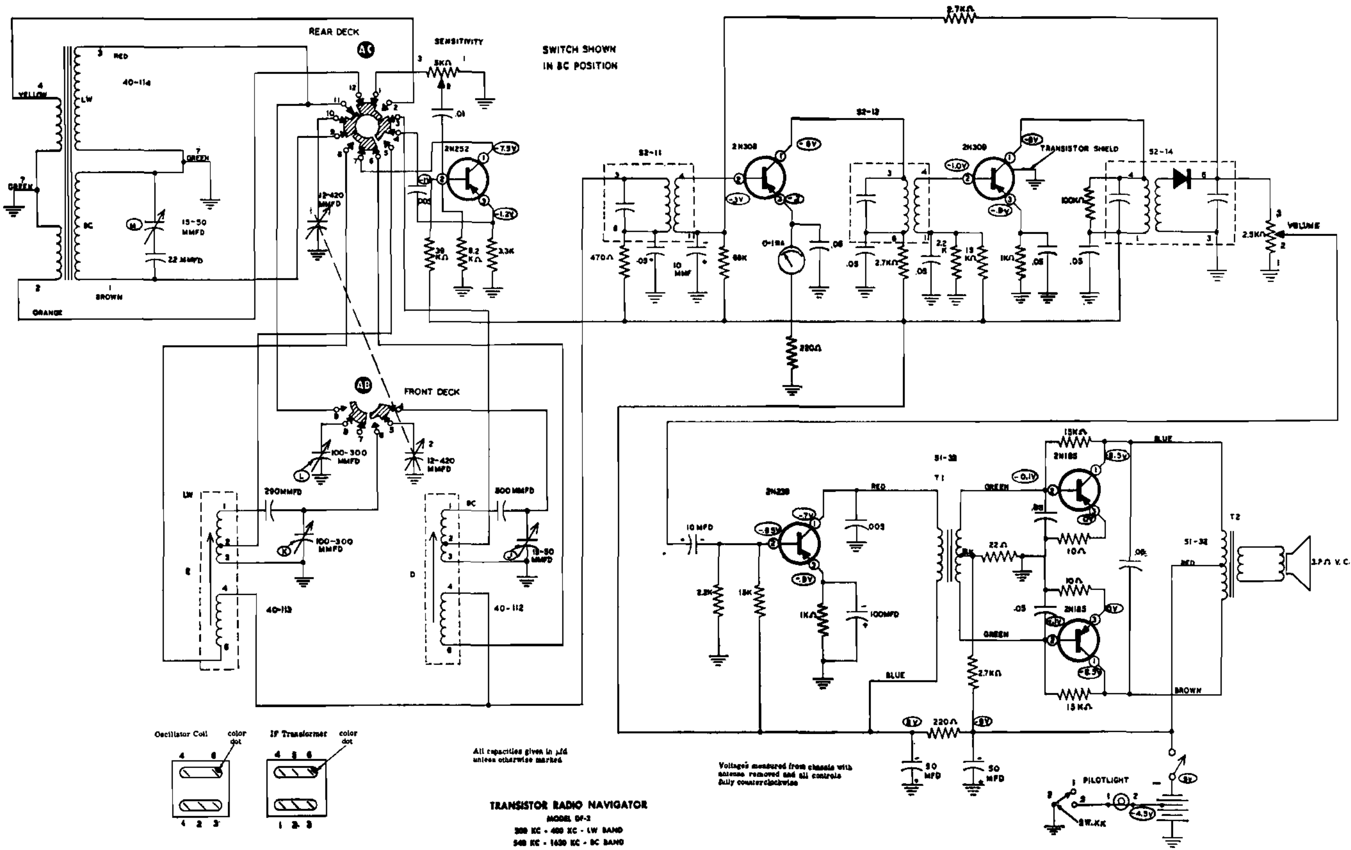

Fig. 9-5: Schematic diagram of the DF-2 Radio Navigator. Covering the 200-400 KC LW Band as the standard AM Broadcast Band, this receiver is sold in "kit" form.

The Health Model DF-2 Radio Navigator is a typical instrument of this type. Exterior and interior views of the DF-2 are given in Figs. 9-4 and 9-6, respectively; the unit's schematic wiring diagram is given in Fig. 9-5; with detailed Alignment procedure outlined in Table 9-D.

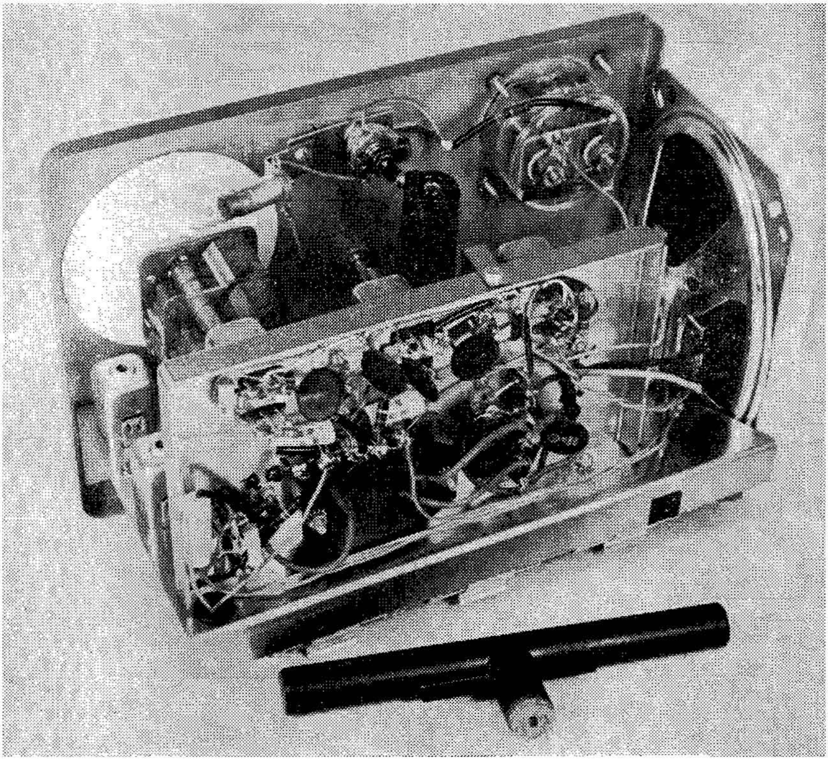

Fig. 9-6: Interior view of the DF-2 receiver. The highly directional loopstick antenna plugs into a rotatable socket. Standard "chassis" type construction is employed.

A two-band receiver, the Model DF-2 covers the 200-400 KC long-wave band and the 540-1620 KC Broadcast-Band; its I.F. is 455 KC. Operating power is supplied by six standard flashlight cells connected in series to supply 9-volts, with a tap at 4.5 volts to operate a dial lamp through a momentary contact push-button switch; current drain of the receiver itself varies from 9MA under zero signal conditions to 20 MA with full volume, giving an average battery life of between 500 and 1000 hours. Its audio output is furnished through a 4" x 6" oval PM loudspeaker.

Referring to the schematic diagram, we see that the circuit is typical of that found in multi-band portable receivers, with but two major changes . . . (a) the addition of a R.F. gain or *Sensitivity* control, and (b) the use of a meter in series with the emitter of the 1st I.F. amplifier. Six *PNP* transistors and a single semiconductor diode are used, with the common-emitter configuration employed in all stages. A standard band-switching arrangement using a multi-position rotary switch is provided for the antenna and oscillator coils.

STEP	PROCEDURE	NOTES
1	a. Receiver out of cabinet, antenna coil in socket, set "ON". b. Couple Signal Generator to antenna coil through loop. c. Close tuning capacitor plates.	Refer to Fig. 9-5. See Section 1.
2	a. Set Signal Generator to 455 KC, modulated signal. b. With lowest generator output which will provide an indication, peak I.F. transformer for maximum audio output or minimum meter reading; reduce generator output as needed. c. Repeat above step to correct for interaction.	I.F. Alignment. Volume control and sensitivity turned up.
3	a. Remove antenna coil, install receiver in cabinet. b. Reinstall antenna coil and rotate until exactly over the front and back markers of top direction indicator base. c. Position front indicator pointer so it points straight up.	Antenna coil plugs in. Tighten front indicator.
4	a. Couple Signal Generator to antenna coil as in Step 1(a). b. Set Signal Generator to supply 600 KC modulated signal. c. Rocking tuning condenser near 600 KC dial setting, adjust BC band oscillator coil (40-112, Fig. 9-5) for maximum audio output.	R.F. Alignment. Bandswitch in BC position. Other controls as in Step 2 (above). Adjust through cabinet holes.
5	a. Set Signal Generator to 1500 KC, adjust receiver dial to same frequency. b. Adjust oscillator trimmer (J, Fig. 9-5) for maximum audio output or minimum meter reading. c. Repeat as necessary to insure correct setting.	Use care and double-check to avoid "images." Check against local station if necessary.
6	a. Set Signal Generator to 1400 KC, tune in signal on radio. b. Adjust antenna trimmer (M, Fig. 9-5) for maximum output. c. Repeat Steps 4, 5, 6 to correct for interaction.	Step 6 completes alignment of Broadcast Band.
7	a. Set Signal Génerator to 220 KC and tune receiver to same frequency. b. Rocking tuning condenser, adjust LW oscillator coil slug (40-113, Fig. 9-5) for maximum output.	Long-Wave Alignment. Bandswitch in LW position. Other controls as above.
8	a. Set Signal Generator and receiver to 380 KC. b. Adjust oscillator trimmer (K, Fig. 9-5) for maximum output. c. Adjust antenna trimmer (L, Fig. 9-5) for maximum output. d. Repeat Steps 7 and 8 several times to correct interaction.	Step 8 complete LW alignment. Install snap hole plugs in cabinet holes.

TABLE 9-D: Alignment data for the DF-2 receiver.

In operation, R.F. signals picked up by the loop antenna system are converted into a 455 KC I.F. signal and applied to a two-stage transformer-coupled I.F. amplifier. The *Sensitivity* control is essentially a resistive shunt across the converter's base-emitter input circuit, and serves to adjust R.F. gain by varying circuit loading. A conventional diode type 2nd detector is employed, with the D.C. component of its detected signal coupled back to the 1st I.F. stage as an AVC control signal. A meter in series with the 1st I.F. amplifier's emitter electrode indicates this stage's emitter current; since this current varies inversely with signal strength due to AVC bias action, the meter reading provides an indication of relative signal strength and may be used as a visual indicator when adjusting the loop antenna. In practice, a *maximum* meter reading is obtained with *minimum* input signal, and vice-versa. The set's *Volume* control serves as the 2nd detector's load resistor, with the audio component of the detected signal capacitively-coupled to a single-ended audio driver; this stage, in turn, is transformer-coupled to a Class B push-pull audio output amplifier. The output stage is coupled to the PM loudspeaker through a conventional impedance matching transformer.

Except for mechanical defects in the antenna control and rotating mechanism, Radio Navigators and Radio Direction Finders may be serviced using the basic methods outlined in earlier Sections. A basic Troubleshooting Chart for this type of equipment is given in Table 9-E; this should be used in conjunction with the detailed receiver Troubleshooting Charts found in Section 5.

COMPLAINT	PROCEDURE	NOTES
Receiver dead, both bands	Check batteries, power switch, stage voltages.	In general, Radio Navigators and similar instruments may be treated as standard multi-band radio receivers, taking into account the equipment's frequency of operation and any mechanical features. For specific hints and procedures, refer to Section 5.
Receiver weak, both bands	Check batteries, stage voltages, alignment.	
Oscillation, squealing	Check batteries, alignment, filter and by-pass capacitors, lead dress, shielding.	
Heading indicator off	Readjust; if difficulty encountered, check for mechanical trouble.	
Interference or noise	Check alignment, by-pass and filter capacitors, shielding.	
BC works, LW dead, or LW works, BC band dead.	Check batteries, local oscillator operation, alignment.	
Distortion	Trouble generally in audio section. Check batteries first.	
Intermittent	Use "bute force" test technique, as outlined, in Section 1, but first check to make sure antenna coil is firmly seated in its socket.	

TABLE 9-E: GENERAL TROUBLESHOOTING CHART — RADIO NAVIGATOR AND DIRECTION FINDERS. For specific defects, treat as a standard multi-band transistorized receiver. Refer to Section 5.

SHORT-WAVE CONVERTER. Thus far, the "Special Receivers" we've discussed have been complete instruments in themselves. However, transistors are frequently used in *R.F. Converters;* basically, these are accessory instruments used with a conventional receiver to permit the reception of signals outside the receiver's normal tuning range. Often, their circuitry is similar to that in the converter stage of a superhet receiver, for they operate in much the same way. That is, they mix a locally generated signal with an incoming R.F. signal and develop an "I.F." signal at a frequency falling within the tuning range of the receiver with which they are used.

The Regency Model ATC-1, shown in Fig. 9-7, is a typical converter. This unit is designed to permit the reception of amateur (Ham) signals on the 80, 40, 20, 15 and 10 meter bands through any standard AM Broadcast-Band receiver; it finds wide application as an amateur-band converter for car radios, but can be used equally well with table-model sets or portables. The instrument's schematic wiring diagram is given in Fig. 9-8, with its set-up and adjustment procedure outlined in Table 9-F; step-by-step Alignment instructions are given in Table 9-G. Operating power is supplied by three 1.5-volt penlight cells connected in series to supply 4.5-volts. A small dial lamp is provided, operated (as is customary in battery-powered gear) by a momentary contact push-button switch ganged to the *Tuning* knob.

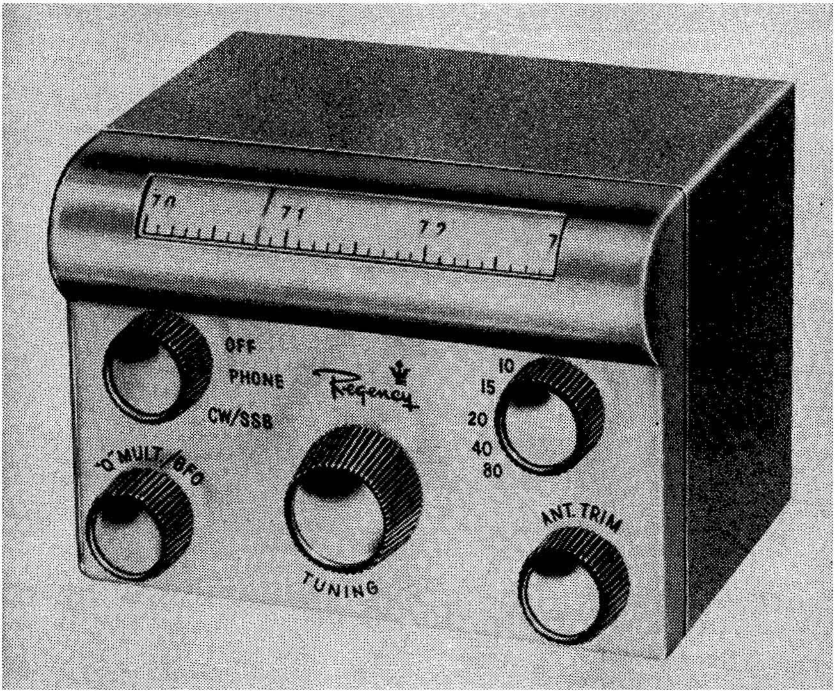

Fig. 9-7: The REGENCY Model ATC-1 transistorized amateur band converter. This instrument is used with a standard Broadcast Band receiver to pick up amateur (ham) radio signals.

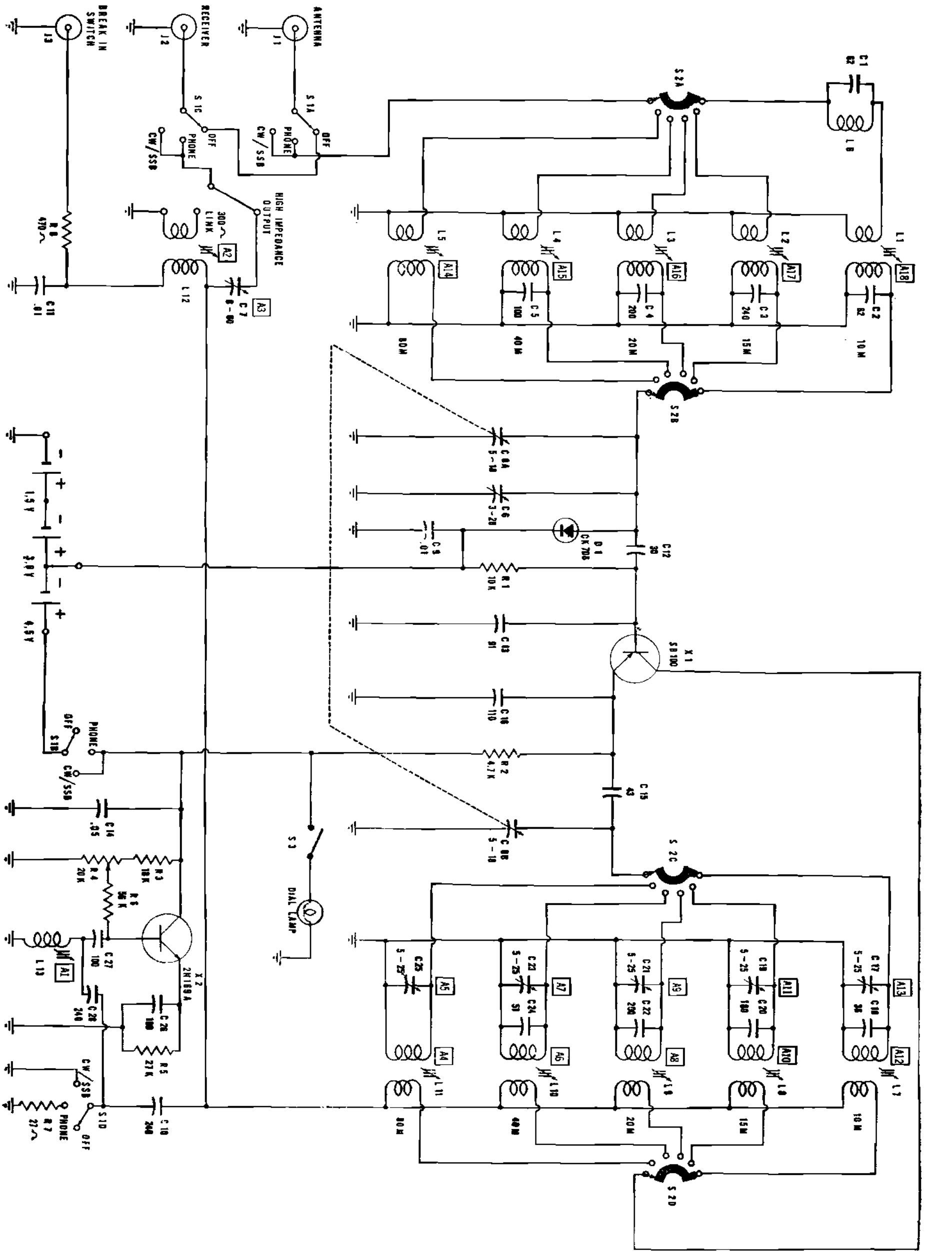

Fig. 9-8: ATC-1 Schematic wiring diagram. Only two transistors are used in the circuit.

An examination of the schematic diagram reveals that only two transistors are used. X1 is a *PNP* Surface-Barrier transistor used as a combination mixer-local oscillator. A four-section multi-position switch serves to select various antenna (R.F.) and local oscillator coils for each of the ATC-1's five bands; individual station tuning is accomplished by a two-gang variable capacitor. Clamp diode D1 serves as a simple limiter to prevent overload in the event the unit is used close to a transmitter. The second transistor, X2, is a *NPN*, junction type serving variously as a "Q" Multiplier for radiotelephone reception or as a beat frequency oscillator (BFO) for CW (code) or single-side band (SSB) reception. In operation, incoming R.F. signals, after selection by the antenna tuned circuit, are converted by X1 to a frequency of 1230 KC; this frequency, of course, falls well within the standard AM Broadcast-Band (540-1600 KC).

STEP	PROCEDURE
1	a. Connect suitable antenna to "ANT" jack of converter. If car radio antenna, extend to maximum height. b. Using low capacitance cable, connect "REC" jack of converter to antenna jack of car radio. c. Set function switch "OFF." Turn car radio "ON." Tune car radio to station near 1400 KC and "peak" its antenna trimmer for maximum output.
2	a. Turn function switch to "CW/SSB" position, "Q MULT/BFO" control full up. Make sure shorting plug is in J3. b. Tune car radio in vicinity of 1230 KC until BFO carrier can be heard. Adjust "Q MULT/BFO" control until carrier stops, then turn up slowly until carrier just reappears. Tune car radio accurately to carrier.
3	a. Turn function switch to "PHONE" position, bandswitch to 40 Meter Band. b. Using fiber alignment tool, adjust I.F. coil A2 (Fig. 9-8) for maximum noise output from car speaker. c. Advance "Q MULT/BFO" control slowly, readjusting A2, until "Q" Multiplier breaks into oscillation. Should be very near end of "Q MULT/BFO" controls rotation.
4	a. If "Q" Multiplier does not oscillate, adjust "CA" (A3, Fig. 9-8) on back of converter in counterclockwise direction. b. Repeak A2 and A3 until "Q" Multiplier breaks into oscillation at about 90% rotation of "Q MULT/BFO" control.
5	a. With adjustments completed, converter may be permanently installed in auto.

TABLE 9-F: Set-up and adjustment procedure for the ATC-1 converter.

STEP	PROCEDURE
1	a. Using low capacitance cable, connect "REC" jack of converter to antenna jack of receiver used. Connect Signal Generator to "ANT" jack. b. Set Signal Generator to supply a moderate level signal at 1230 KC. Receiver should be on, volume full up. c. Set function switch to "CW/BFO" position and rotate "Q MULT/BFO" control full up. d. Using fiber alignment tool, adjust L13 (A1, Fig. 9-8) to 1230 KC. e. Turn "Q MULT/BFO" control fully counterclockwise. Using alignment tool, peak I.F. coil A2 (Fig. 9-8) for maximum output, reducing Signal Generator output as necessary.
2	a. Remove screws holding chassis wrap to front cover and rear panel, sliding chassis wrap back until oscillator trimmer capacitors can be reached. b. Set band selector switch to "80," and adjust "TUNING" for dial reading of 3.5 MC. c. Set Signal Generator to 3.5 MC and, using minimum generator output, adjust the oscillator coil slug (A4, Fig. 9-8) for maximum signal output from receiver. d. Set Signal Generator and receiver dial both to 4.0 MC, and adjust oscillator trimmer A5 for maximum output. e. Repeat Steps 2a through 2d until calibration checks.
3	a. Rotate band selector to "40," and set dial and Signal Generator to 7.0 MC. b. Adjust A6 to frequency. c. Set dial and Signal Generator to 7.3 MC. d. Adjust A7 to frequency. e. Repeat Steps 3a through 3d until calibration checks.
4	a. Adjust band selector to "20," and set dial and Signal Generator to 14.0 MC. b. Adjust A8 to frequency. c. Shift dial and Signal Generator to 14.35 MC. d. Adjust A9 to frequency. e. Repeat Steps 4a through 4d until calibration is correct.
5	a. Rotate band selector to "15," and set dial and Signal Generator to 21.0 MC. b. Adjust A10 to frequency. c. Shift dial and Signal Generator to 21.45 MC. d. Adjust A11 to frequency. e. Repeat Steps 5a through 5d for accurate dial calibration.
6	a. Adjust band selector to "10," and set dial and Signal Generator to 28.0 MC. b. Adjust A12 to frequency. c. Shift dial and Signal Generator to 29.7 MC. d. Adjust A13 to frequency. e. Repeat Steps 6a through 6d until calibration is correct, then reassemble converter in its case. If minor shift in calibration has occurred, touch up settings of A4, A6, A8, A10, and A12 (Fig. 9-8).

TABLE 9-G: Alignment data for the ATC-1 Converter. After completing Step 6, the R.F. input circuit coils are adjusted by setting the ANT TRIM control in the middle of its range and peaking each of the R.F. coil cores (A14, 15, 16, 17, and 18) to a signal in the respective band. These adjustments should be made with the unit's regular antenna connected.

The Toubleshooting Chart given in Table 9-H, while applying specifically to the Model ATC-1, can be used as a general guide for servicing other transistorized short-wave converters which may be introduced in the future. Dial cord restringing diagrams are given in Fig. 9-9. As a general rule, service failure in transistorized converters similar to the ATC-1 are extremely rare, and, frequently, are mechanical rather than electrical (broken dial cord or defective antenna connection, for example). Where a service complaint is en-

CHECK → COMPLAINT ↓	Batteries	Antenna Ckt.	R4's Adj.	Transistor X1	Transistor X2	C8 (dirty)	Bandswitch S2	Function S1	Coil on band	Dial lamp	Poor by-pass	Car radio	Alignment	REMARKS
No output	*	*	*	●	●			●				●	●	See Note 2, below.
Interference at 1230 KC													*	See Note 1, below.
Dial doesn't track												●	*	
Dial pointer doesn't move														Check pointer to see if secure, then refer to Note 3, below.
Band indicator doesn't shift							●							See Note 3, below.
Inoperative on one or two bands	*			●			*		●					Check coils on defective band and general alignment.
Noise at low frequency end of bands						*								
Noise overall		●				●					*	*		See Note 4, below.
Lacks sensitivity	*	●		●	●							●		Check car radio operation first.
Pilot lamp dark when tuning knob pressed	*									●				See Note 2, below.

NOTES:

1. If local station at 1230 KC, realign to new output frequency, following procedure given in Table 9-G, but using different frequency in Step 1b.
2. If dial light operates when tuning knob depressed, batteries are O.K.
3. To restring dial cords, refer to Fig. 9-9.
4. To reduce noise, install coaxial by-pass capacitors (Sprague #48P10) in car radio.

TABLE 9-H: GENERAL TROUBLESHOOTING CHART—ATC-1 CONVERTER. While this Chart applies specifically to the ATC-1 Converter, it may be used as a general guide when servicing other transistorized converters.

countered, it may be the result of improper installation or adjustment, and these items should be checked first.

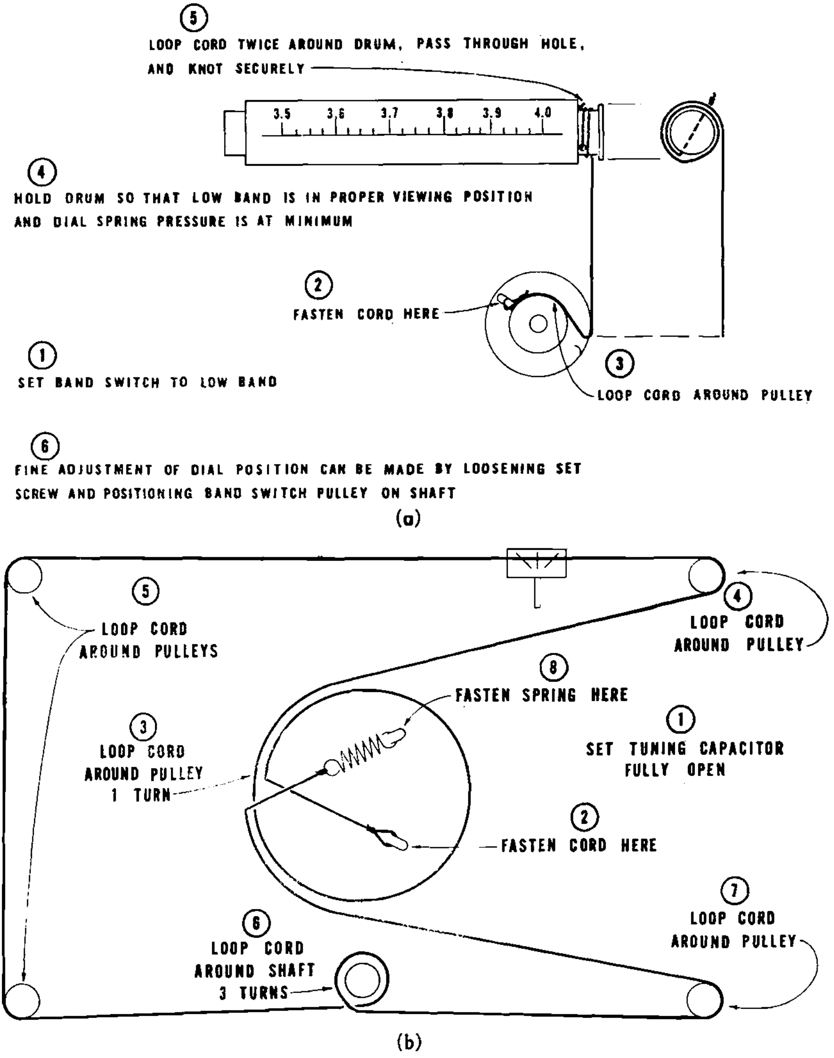

Fig. 9-9: ATC-1 dial cord restringing diagrams . . . (a) Tuning Dial, (b) Band Change Dial.

FM CONVERTER. Regency's Model RC-103 *FM TeleVerter*, shown in Fig. 9-10, represents a unique approach to transistorized converter design. This instrument, employing but a single *PNP* Surface-Barrier transistor, permits the reception of standard FM

Broadcast-Band (88-108 MC) stations through any commercial TV receiver. It accomplishes this job by converting the FM station signals to frequencies falling within TV Channels 3 and 4. An interior view of the RC-103 is shown in Fig. 9-12, while the unit's schematic wiring diagram is given in Fig. 9-11; Alignment data is given in Table 9-I. Operating power is furnished by three standard penlight cells connected in series to supply 4.5-volts, with a tap of 3 volts for base bias; normal current drain is less than one milliampere, assuring a battery life approximating average "shelf" life. In use, the TV receiver's regular antenna system is employed, with its 300-ohm input lead connected to the *TeleVerter's* "Antenna" terminals. A short length of 300-ohm twin-lead is then connected between the unit's "Receiver" terminals and the TV set's regular Antenna terminals.

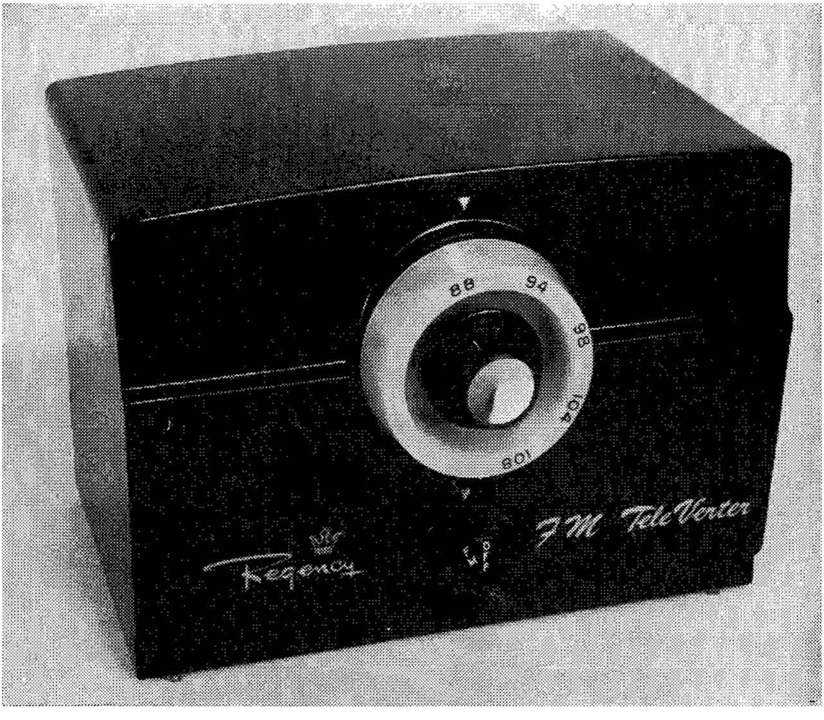

Fig. 9-10: REGENCY's Model RC-103 FM TeleVerter. This transistorized unit permits the reception of the FM Broadcast Band through standard TV receivers.

Referring to the schematic diagram, Fig. 9-11, we see that the RC-103's multi-position control switch serves two basic functions. It acts both to turn the instrument "ON" and "OFF" and to insert

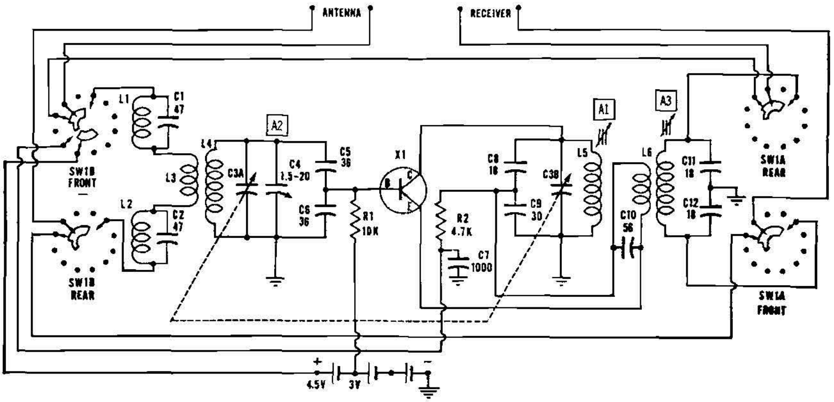

Fig. 9-11: FM TeleVerter schematic diagram. This instrument uses a single Surface-Barrier transistor.

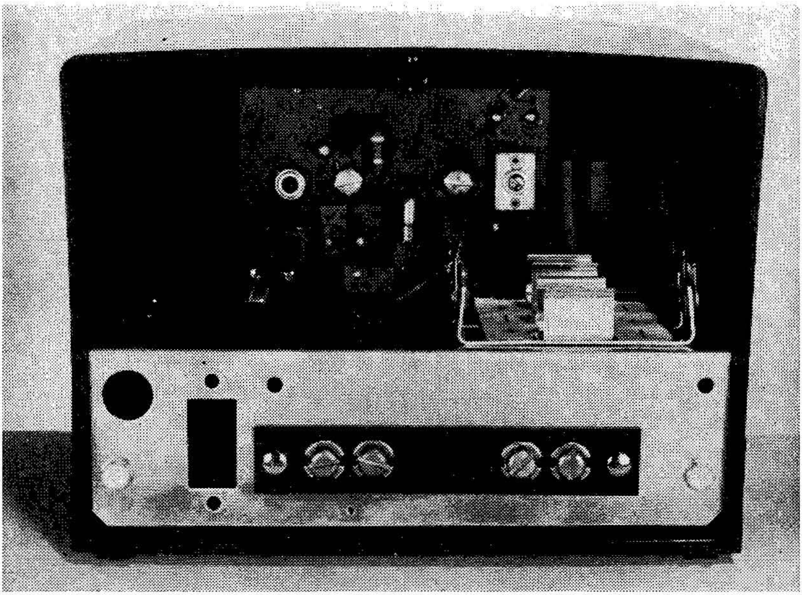

Fig. 9-12: Interior view of the RC-103 TeleVerter. Operating power is supplied by three penlight cells.

STEP	PROCEDURE
1	Connect Signal Generator to TeleVerter "ANTENNA" terminals; use matching pad or resistors to obtain 300 ohm balanced input.
2	Using length of 300-ohm twin-lead, connect "RECEIVER" terminals of TeleVerter to antenna terminals of a TV receiver having a 40 MC I.F. system and using intercarrier sound.
3	Turn TV receiver "ON" and set to channel 3.
4	Set Signal Generator to 98.0 MC, and adjust output to about 100 microvolts, modulated 30%.
5	Set TeleVerter dial to 98.0 MC. Adjust slug A1 (Fig. 9-11) until signal is heard.
6	Reduce Signal Generator output until noise starts to override signal.
7	Peak input trimmer A2, keeping Signal Generator output low enough to hear background noise.
8	Rock TeleVerter tuning while adjusting output coil A3 for maximum signal.

TABLE 9-1: Alignment data for the RC-103 FM TeleVerter.

the *TeleVerter* circuit in series with the TV set's antenna connection; when the RC-103 is "OFF," its *Receiver* and *Antenna* terminals are bridged together through switch SW1. In operation, X1 serves as a combination mixer-local oscillator, continuously tuned over its operating range by two-gang capacitor C3A-C3B. Its output is fed to the TV set through a balanced transformer. The oscillator operates over the frequency range of from 30.83 MC to 37.5 MC as the input circuit is tuned from 88 MC to 108 MC. Thus, the local oscillator frequency equals the FM carrier frequency plus 4.5 MC, with the sum divided by three. As a result of the mixing action of the transistor, *two output signals* are obtained. One is an unmodulated "Picture" carrier at twice the frequency of the oscillator; this is simply the local oscillator's 2nd harmonic. The second in an FM modulated "Audio" carrier which is 4.5 MC removed from the "Picture" carrier; this signal is developed by the difference between the local oscillator and FM station carrier frequencies. Two signals are needed, of course, to permit the *TeleVerter* to be used with TV receivers employing an *intercarrier* sound I.F. system. As you may recall, such systems depends on the 4.5 MC "beat" between "Picture" and "Audio" TV carriers to supply their I.F. signal.

Except for service complaints caused by weak batteries or by improper installation or operation, relatively little can go wrong with the FM *TeleVerter* as long as it is not subjected to physical or electrical abuse. Basic service suggestions are outlined in the Troubleshooting Chart given in Table 9-J.

COMPLAINT	TEST PROCEDURE	NOTES
Doesn't work	Check operation of TV receiver; make sure connections are correct; check battery.	Check transistor last.
Weak	Check battery; check TV antenna system, check TV receiver performance.	
Noisy	Check antenna system, all connections.	
Drifts	Check TeleVerter's location. If on top of TV receiver or in other warm location, relocate. Check battery.	Keep TeleVerter away from heat.
Intermittent	Check connections to TV receiver and antenna system, looking for partial opens and intermittent shorts.	

TABLE 9-J: GENERAL TROUBLESHOOTING CHART—FM TELEVERTER. This Chart may be used as a general guide for servicing any similar equipment.

TRANSMITTERS

As this is written, R.F. power transistors have been available for only a short time, and even these have limited power output and fairly low maximum operating frequencies. Most have maximum outputs of less than 50 watts and maximum operating frequencies of well under 30 MC. As a result, the transistor has not been used to any extent in the R.F. stages of commercially manufactured medium or high power Radio Transmitters. Whether the transistor will see extensive use in such applications in the future will depend upon both economic and technical developments, for not only must future transistors meet the basic engineering requirements of transmitter designs, but they must be competitive, price-wise, with alternate devices capable of handling the same functions.

While transistors, in the past, have not been used to any degree in the *R.F. stages* of medium or high power transmitters, they have found wide application in supporting equipment. For example, power transistors are used quite often in D.C. power supplies to furnish high B voltages to battery-powered vacuum tube-operated transmitters; here, they serve as efficient replacements for vibrator power packs and dynamotors. We'll discuss typical power supply circuits a little later in this Section. In addition, transistors are used as audio amplifiers in the *modulator* stages of mobile and Marine radiotelephony equipment. Finally, R.F. transistors are used to some extent in *low power* transmitters, such as "Wireless" microphones and phonograph oscillators, as well as in the low-power telemetery tansmitters of satellites and guided missiles. The latter equipment, of course, will seldom, if ever, be encountered by the average service technician; in most cases, the circuits used are highly classified. However, the practical worker may be called on to repair low-power phono oscillators or medium power modulators from time to time. Let's take a look, then, at such equipment.

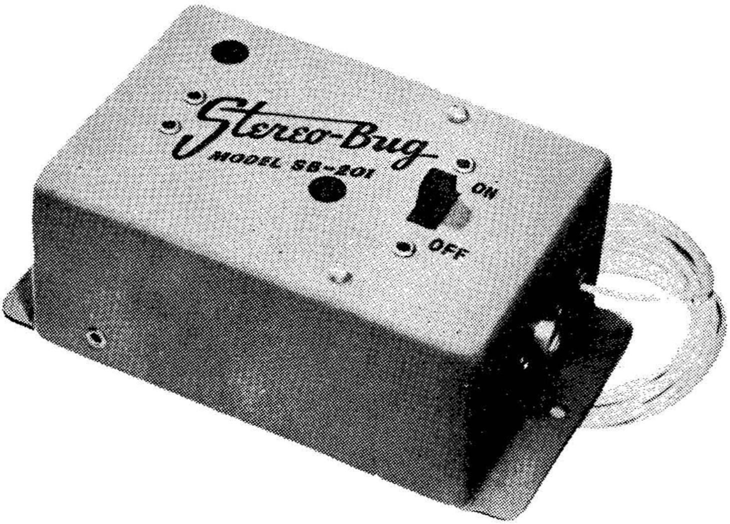

Fig. 9-13: LAFAYETTE RADIO's Model SB-201 "Stereo-Bug." Designed for converting standard phonographs to stereophonic operation, this instrument is basically a small radio transmitter.

PHONO OSCILLATOR. Lafayette Radio' Model SB-201 *"Stereo-Bug"* is an interesting device designed to permit the easy conversion of a standard single-channel record player to dual-channel stereophonic operation by the simple substitution of a suitable stereo cartridge for the player's regular phono cartridge. The "second channel" output obtained from the stereo cartridge is applied to the SB-201, which uses it to modulate a radio-frequency carrier. This, in turn, is radiated for a short distance and picked up by a standard AM Broadcast-Band receiver, with its audio amplifier and loudspeaker system thus serving as the "second stereo channel." This avoids the need for a duplicate audio amplifier and loudspeaker. Thus, the *Stereo-Bug* is essentially a low-power radio transmitter. Although designed for a specialized application, the circuit used in this device is similar to those found in all transistorized phono oscillators and "wireless" microphones.

An exterior view of the SB-201 is shown in Fig. 9-13, while its schematic wiring diagram is given in Fig. 9-14. Referring to the latter,

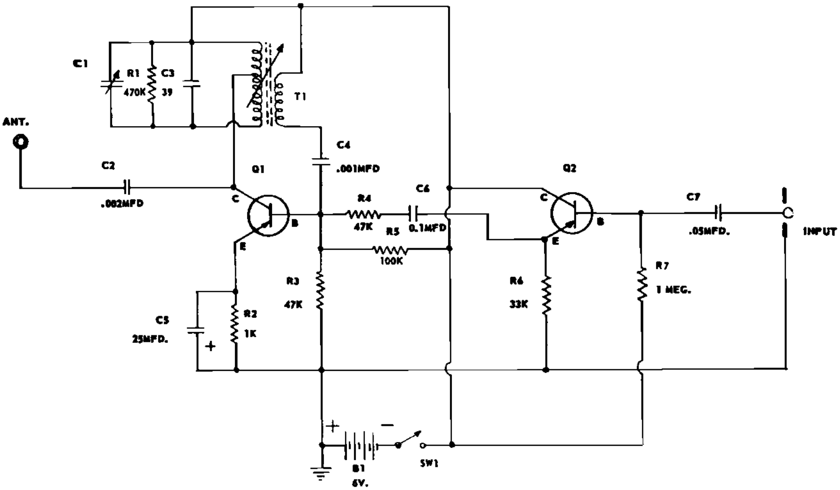

Fig. 9-14: "Stereo-Bug" schematic diagram. The circuit used is similar to that employed in wireless microphones and phonographs.

two *PNP* transistors are used in this device, with operating power supplied by a single 6-volt battery (B1) controlled by a SPST slide switch (SW1). Q1 serves as a tickler feedback common-emitter R.F. oscillator. Operating frequency is determined by the tuned circuit made up of R.F. transformer T1's primary winding, shunt capacitor C3, and trimmer C1. Base bias is supplied by voltage-divider R3-R5, stabilized by the voltage developed across emitter resistor R2, by-passed by C5. Q1's output signal is coupled to the antenna lead through C2. The R.F. signal developed by Q1 is amplitude-modulated by an audio signal applied to its base through isolating resistor R4 and D.C. blocking capacitor C6. This signal, in turn, is obtained from the emitter load, R6, of audio amplifier Q2, serving as a common-collector amplifier. Q2's base bias is furnished through R7, with its input signal applied through C7. A common-collector circuit is used here because its high input impedance (see Section 10) provides minimum loading on the audio signal source (phonograph cartridge). The unit's R.F. output frequency is within the AM Broadcast-Band.

From a practical servicing viewpoint, little can go wrong with this type of equipment. The batteries can become weak, of course, and with long service any electrolytics used may dry out. If too high an input signal amplitude is used, the output signal may be distorted, but no permanent damage should result. If the instrument is used in a damp or humid location, moisture may be absorbed by the coil, causing a loss of "Q" and, in some cases, preventing oscillation. Finally, exposure to excessively high operating temperatures may cause a shift in operating frequency and possible transistor damage.

CW TRANSMITTER. The schematic wiring diagram of a low power CW (Radiotelegraph) transmitter is given in Fig. 9-15. While

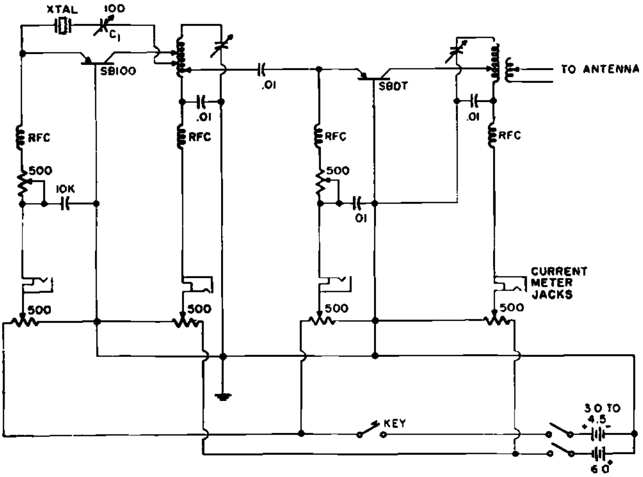

Fig. 9-15: Schematic wiring diagram of a low power transistorized radio transmitter.

this circuit does not apply to currently available commercially built transmitters, it does represent typical design practice and may be be used as a guide when such equipment is encountered in future work. Referring to the schematic diagram, a *PNP* Surface-Barrier transistor serves as a *common-base* crystal-controlled R.F. oscillator, with feedback provided between its collector and emitter circuits through phasing capacitor C1 and the quartz crystal (XTAL). The output signal developed in its collector load, a tuned resonant circuit, is coupled through a 0.01 Mfd. capacitor to the emitter of a *PNP* SBDT (Surface-Barrier Diffused Type) common-base power amplifier, with its output, in turn, coupled to the antenna system. Taps are provided on the coils used in each resonant circuit to permit proper matching to transistor circuit impedances. R.F. chokes (RFC) are used to isolate emitter and collector bias supplies, with variable resistors provided to permit adjustment of all bias currents for optimum operation. The transmitting Key is used to interrupt the emitter bias circuit, turning the transmitter On and Off. The power output of a transmitter of this general type may run over 100 milliwatts.

Perhaps the most common defect found in transmitters using circuits similar to that given in Fig. 9-15 is transistor failure due to improper adjustment and operation techniques. Incorrect adjustment of the operating bias may cause excessive currents to be drawn, resulting in overheating and, possibly, thermal runaway. If the resonant tank circuits are tuned *without a load*, excessively high voltages may be applied to the transistor electrodes, causing "punch-through" and voltage breakdown. As mentioned in Section 1, extra caution must be observed when working with equipment employing Surface-Barrier and related transistor types (SBDT and MADT units), for these transistors are easily damaged by voltages in excess of their maximum ratings and by stray A.C. leakage.

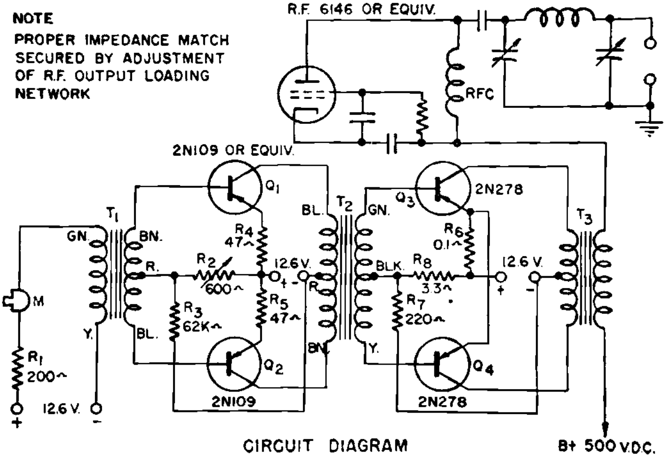

Fig. 9-16: Schematic wiring diagram of a transistorized modulator. Basically a high-power audio amplifier, such units are used frequently in mobile and portable radio-telephone transmitters, even though vacuum-tube circuitry may be amployed in the R.F. stages.

MODULATORS. As a general rule, the transistorized modulators used with radiotelephone transmitters employ circuits almost identical to those found in P.A. equipment and similar moderate power audio amplifiers (see Section 3). The chief difference is the use of a different type of output transformer . . . one with a secondary matching the power output stage to a transmitting tube rather than to a loudspeaker's voice coil. The schematic wiring diagram of a typical 25 watt audio modulator is given in Fig. 9-16. Here, a carbon microphone is coupled to a low power Class B push-pull amplifier (Q1 and Q2). This stage, in turn, is transformer-coupled to a second Class B push-pull amplifier (Q3 and Q4) using high-power transistors. The output signal obtained from the second stage is coupled to the radio transmitter's R.F. power amplifier through a suitable impedance matching transformer (T3). *PNP* transistors in the common-emitter configuration are used in all stages. R1 serves to limit microphone current. Base bias current for the driver stage is furnished through voltage-divider R2-R3, stabilized by the voltages developed across emitter resistors R4 and R5. In the output stage, base bias current is furnished through voltage-divider R7 and R8, with a common emitter resistor, R6, used both to stabilize bias and to insure balanced operation.

TROUBLESHOOTING TRANSMITTERS. The Troubleshooting Chart given in Table 9-K may be used as a general guide when servicing transistorized radio transmitters. Here, typical service complaints are listed, together with an indication of which circuits should be checked and the type of defect which may be encountered. As far as modulators are concerned, these are essentially audio amplifiers and, therefore, may be checked out and tested using the techniques and Troubleshooting Charts given in Section 3. Where unusual troubles are encountered, stage-by-stage checking techniques may be employed, using a Grid-Dip Meter or small Monitor Receiver.

POWER SUPPLIES

As we have observed in earlier Sections, battery-operated transistorized power supplies are used frequently in vacuum tube-equipment. In most of the cases examined thus far, the power supply was built-in as a semi-permanent part of the equipment, and served as an efficient replacement either for high-voltage B batteries or for a vibrator-type power pack. Actually, the transistor is an ideal device for such applications. It can operate effectively as an oscillator on relatively low voltages, with the A.C. signal developed by its action stepped-up by a simple transformer to almost any value desired. After step-up, the high A.C. voltage can be rectified and filtered by conventional means. Since oscillator frequency is relatively unimportant if a D.C. output is needed, basic operation can be at much higher frequencies than are used in, say, vibrator-type power packs, thus greatly simplifying filtering problems. The higher the "ripple" frequency, of course, the easier it is to filter using relatively small filter capacitors and chokes, thus permitting weight and space savings in the equipment. In addition, the transistor has no contacts to arc and spark, cutting down noise "hash" and eliminating a common cause of component failure in electromechanical systems. These advantages have led to the transistor's use in *general purpose* power supplies . . . self-contained units which may be used with a variety of equipment. Chances are that the number and types of transistorized power supplies in use will increase as time goes by, and that the repair of these units will become of increasing importance to the service technician. Commercially manufactured transistor power supplies may be divided into three general classes . . . *D.C. to A.C. Converters* (sometimes called *Inverters*), *D.C. to D.C. Converters,* and special purpose units, such as *Auto Ignition Systems.* Let's examine each of these classes in turn.

COMPLAINT	CHECK THESE CIRCUITS									LOOK FOR
	OSCILLATOR	BUFFER(S)	OUTPUT AMP.	ANT. CKT.	POWER SUPPLY	AUDIO PREAMP.	MODULATOR	REMOTE CONTROLS	SPECIAL CKTS (If used)	
No R.F. output	●	●	●	●	*			●	●	Loss of D.C., defective osc. or amplifier.
Low output		●	*	●	*					Inadequate drive, improper adjustment.
Off frequency	*				●				●	Check oscillator carefully; crystal if used.
Frequency drift	*				●				●	Trouble in oscillator circuit; defective oven.
Harmonics		●	●	●						Poor neutralization; overdrive.
Parasitics		●	*							Poor neutralization; open by-pass capacitors.
Distortion (Radiotelephone)					●	●	*			Trouble generally in audio circuits. Refer to Section 3.
"Splashes-Burps" (Radiotelephone)							*			Overmodulation.
Key Clicks								●	●	Trouble in keyed circuit; defective click filter; open by-pass capacitors.
Blows out transistors		●	●				●	●	●	Overdrive; improper bias adjustment; excessive heat.

NOTE: Where possible, after confirming complaint, monitor stage currents and check tuning and neutralization adjustments. If transmitter blows transistors or line fuses, check for shorts before attempting operation.

TABLE 9-K: GENERAL TROUBLESHOOTING CHART — TRANSISTORIZED TRANSMITTERS. Use this Chart as a guide when servicing transistorized radio transmitters, whether simple units such as "wireless" microphones or complex multi-stage equipment.

D.C. TO A.C. CONVERTER. While battery-powered electronic equipment has been manufactured in increasing quantities since the invention of the transistor, the overwhelming majority of electronic gear in use is designed for A.C. power-line operation, and requires approximately 115 volts (generally 105-120 volts) at 60 cps. In addition to electronic equipment, there are many types of electrical appliances . . . mixers, drills, blenders, fans, and so on . . . which are designed for A.C. line operation. If an individual wishes to use this equipment in a mobile application . . . in a car or truck, on a boat, or in an airplane, for example . . . he must provide an adequate source of A.C. power. As a general rule, D.C. power will be available from storage batteries, and some means is sought to convert this to A.C. power at nominal line frequencies. In pre-transistor days, this was generally accomplished by the use of vibrator-type power packs or motor-generators (essentially a D.C. motor coupled to an A.C. generator). Both of these methods will produce useable 60 cycle power, but they are inefficient, noisy, and prone to frequent breakdowns. Today, however, D.C. to A.C. conversion can be done efficiently, noiselessly, and in minimum space with transistor-operated units which require a minimum of maintenance.

The Heath Model PC-1 Power Converter, shown in Fig. 9-17, is a typical transistorized D.C. to A.C. power supply. Designed for operation from a 12-volt D.C. source, this unit supplies 115 volts A.C. at 60 cps, and can handle loads up to 125 watts in continuous service or up to 200 watts in intermittent applications. Its overall

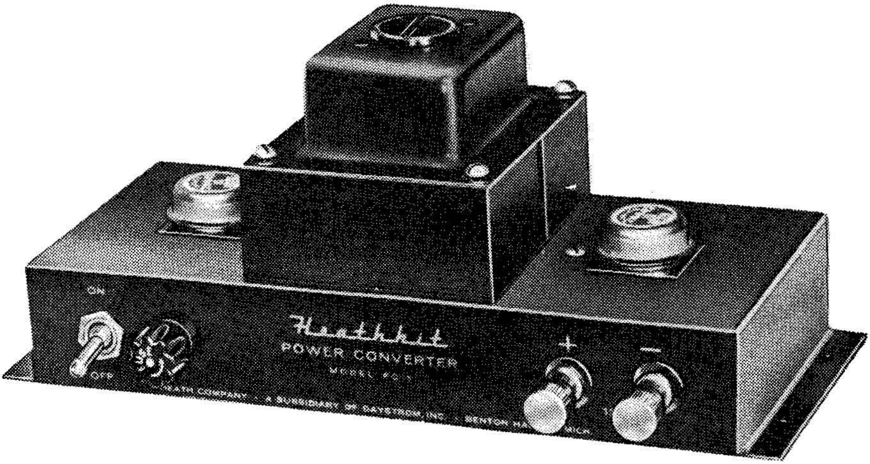

Fig. 9-17: The HEATH Model PC-1 Power Converter. Obtaining its power from 12-volt storage or dry batteries, this unit supplies 115 volts A.C. at 60 cycles for the operation of standard (line-powered) radio receivers, television sets, lights, small motors, and similar equipment.

efficiency averages about 75% for loads between 70 and 125 watts. The PC-1's schematic wiring diagram is given in Fig. 9-18.

Referring to the schematic, we see that D.C. power is furnished through a line fuse and controlled by a heavy-duty "ON-OFF" switch. Two high-power *PNP* transistors are used in a common-emitter push-pull oscillator circuit. In operation, a three-winding iron-core transformer serves both to provide the feedback necessary to start and sustain oscillation and to step-up the A.C. signal developed to 115 volts. Base bias is supplied by voltage-divider R1-R2, bypassed by C1. C2, across the transformer's primary, serves to stabilize the circuit's operating frequency. Sufficient drive is furnished by the base feedback winding so that the transistors are driven to current saturation on each half-cycle and, in effect, serve as current switches; thus, only one transistor is conducting at any one instant. This provides highly efficient operation, but develops an essentially square-wave signal waveform. In practice, the transistors are mounted directly on the unit's metal chassis for improved heat dissipation, but with their collectors (connected to their outer metal case) insulated electrically by small mica washers.

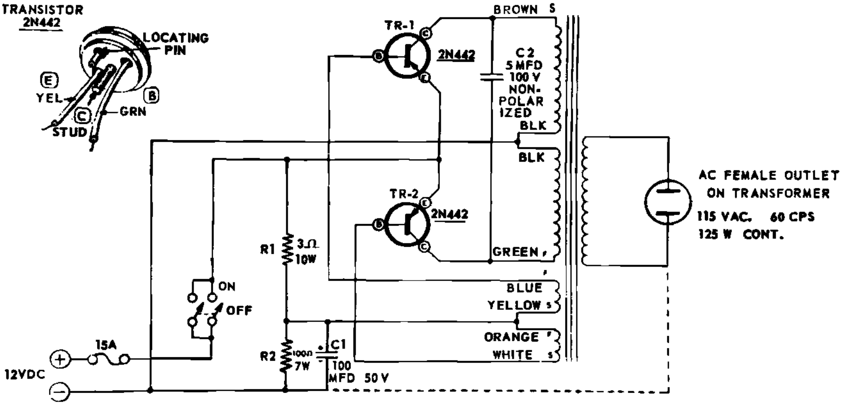

Fig. 9-18: Model PC-1 schematic diagram. Two transistors are used as a push-pull power oscillator. The circuit is similar to that employed in all transistorized D.C. to A.C. power converters (or inverters).

D.C. TO D.C. CONVERTERS. Lowpower D.C. to D.C. power supplies as used in "hybrid" radio receivers were examined in Sections 4 (see Fig. 4-9) and 6 (see Figs. 6-25 and 6-27); these units supplied moderately high voltages at fairly low currents. Where D.C. B voltage is supplied to medium power radio transmitters, similar voltages may be needed, but at much higher currents. Theoretically, of course, we could obtain D.C. power from an A.C. supply similar to the one just discussed (Fig. 9-18) simply by adding suitable rectifiers and filters. In practice, however, this is a relatively inefficient approach due to the large filter components needed to eliminate 60 or 120 cycle ripple. As a result, most transistorized D.C. to D.C. power supplies employ basic oscillators operating at frequencies ranging from a few hundred cps to as high as several KC.

Commercially manufactured D.C. to D.C. converters are often assembled as direct physical replacements for dynamotor or vibrator-type power supplies in existing equipment. One such unit is shown in Fig. 9-19, alongside the dynamotor it is designed to replace. This unit, Aircraft Radio's Model DV10A *Dynaverter,* weighs only 1.6 pounds versus the 3 pound weight of the dynamotor. It is designed for input voltages of 24 to 28 volts, D.C. at approximately 2.3 amperes, and can supply an output of 270 volts D.C. at 150 MA.

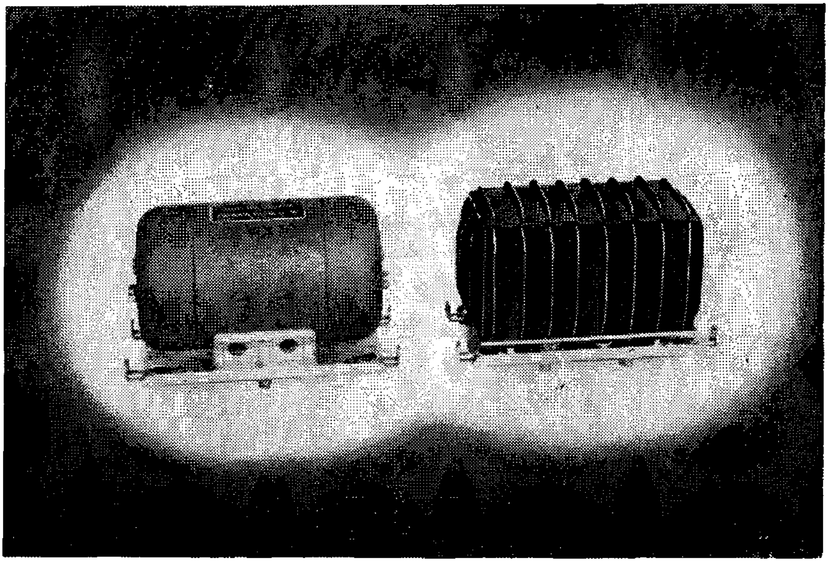

Fig. 9-19: AIRCRAFT RADIO Model DV10A Dynaverter, a transistorized D.C. to D.C. power converter designed as a replacement for a standard dynamotor, with which it is shown (dynamotor at left).

The schematic wiring diagrams of typical D.C. to D.C. power supplies are given in Fig. 9-20. Both of these are basically similar in that *PNP* power transistors are used as common-collector push-pull oscillators. In each case, too, base bias current is supplied by a resistive voltage-divider (R1-R2) and suitable bypass capacitor (C1), and a 12-volt D.C. source is employed. The circuit shown in Fig. 9-20(a) uses a full-wave rectifier and delivers 275 volts D.C. at currents up to 125 MA. Using a different transformer, the circuit given in Fig. 9-20(b) employs a full-wave *bridge* rectifier, and delivers either 250 volts D.C. at 275 MA or 500 volts D.C. at 165 MA. In both circuits, stacked semiconductor diodes are used as rectifiers.

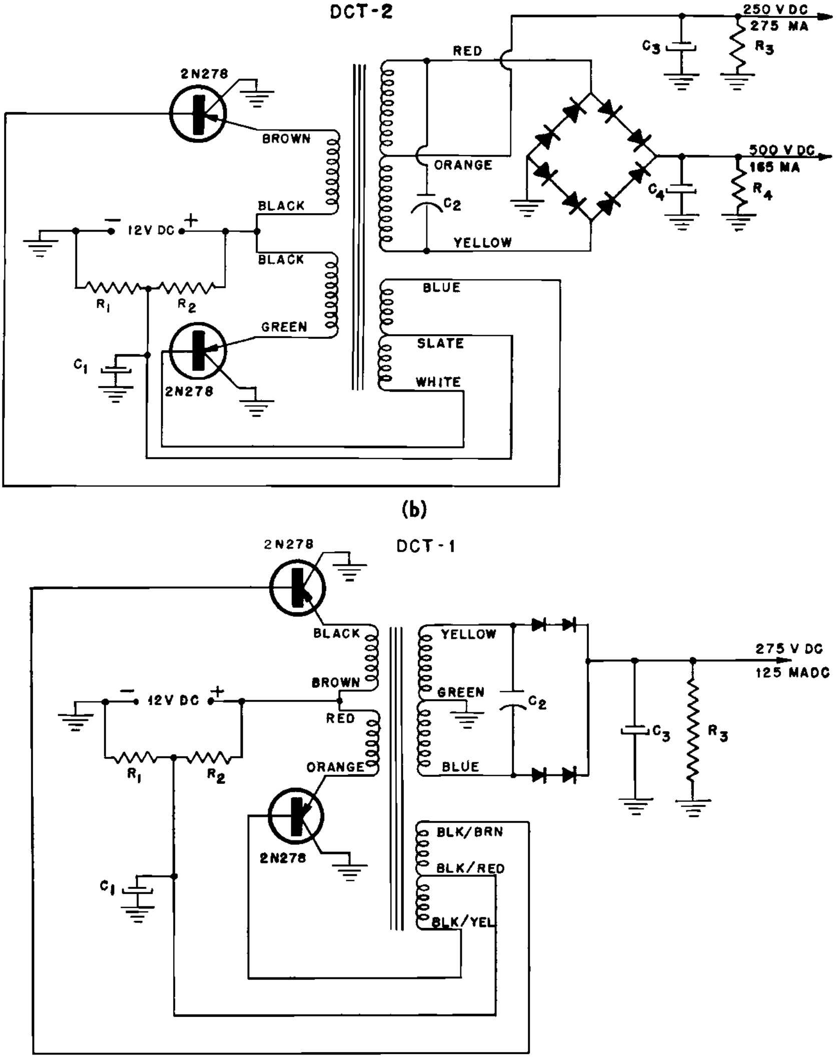

Fig. 9-20: Schematic wiring diagrams of D.C. to D.C. converters. The circuits are similar to those employed for D.C. to A.C. converters, but with the addition of a rectifier and filter network. Circuit shown at (a) delivers 275 V.D.C. at 125 MA; circuit shown at (b) delivers 250 V.D.C. at 275 MA or 500 V.D.C. at 165 MA.

TROUBLESHOOTING. Transistorized power supply service complaints are frequently the result of physical or electrical abuse. The equipment may fail as a result of physical damage, such as may occur from the unit being dropped or hit with a heavy object, or from exposure to excessive ambient temperatures or high humidity conditions. Component damage may occur, too, if the equipment is operated in an "overload" condition for long periods, if its output is accidentally shorted, or if incorrect input voltages are applied. Depending on fusing and individual circuit variations, the applica-

	COMPLAINT ↓ / PROBABLE DEFECTS →	Supply battery	Defective switch	High resistance battery leads	Shorted transformer	Open transformer	Leaky transistor	Open transistor	Open capacitor in oscillator	Leaky capacitor in oscillator	Defective rectifier	Open input filter	Leaky input filter	Open output filter	Leaky output filter	Overload	NOTES
A.C. SUPPLIES	No output voltage	*	●			●	●	●		●							Check fuse, battery.
	Low output voltage	*		*			●			●						*	Check unloaded first.
	Wrong frequency	*							*							*	See C2, Fig. 9-18.
	Poor regulation	*		*			●									*	
	Overheating				●		●			●						*	Check unloaded.
	Blows fuses				●		●									*	
D.C. SUPPLIES	No output voltage	*	●			●	●	●		●	●		●		●		Check oscillator.
	Low output voltage	*		*			●			●	●	*	●		●	*	Check unloaded first.
	Excessive ripple											●		●		●	
	Poor regulation	*		*			●				●	*				*	
	Overheating				●		●			●	●		●		●	*	Check unloaded.
	Blows fuses				●		●				●		*		●	*	

TABLE 9-L: GENERAL TROUBLESHOOTING CHART — POWER SUPPLIES. Use this Chart as a guide when servicing transistorized converters or inverters. As in earlier charts, common defects are identified with an asterisk (*).

tion of a source voltage of *reversed* polarity may either . . . (a) blow the line fuse, (b) simply prevent operation without causing damage, or, (c) may seriously damage the transistors or other components. Typical service complaints encountered in the repair of both A.C. (D.C. to A.C. converters) and D.C. (D.C. to D.C.) power supplies are outlined in the Troubleshooting Chart given in Table 9-L, along with an indication of common defects causing each complaint. In general, this type of equipment can be serviced using a minimum of test equipment. A Multitester is needed, of course, for voltage checks, and an Oscilloscope or Signal Tracer is useful for determining if the basic oscillator is working; in many cases, however, oscillator action can be checked simply by listening for transformer "hum."

AUTOMOBILE IGNITION SYSTEMS. In an automobile engine, a high voltage must be applied to each spark plug at just the right moment to ignite the compressed fuel mixture in the cylinder. This high voltage is obtained from a transformer-like ignition coil having a low-voltage high-current "primary" winding and a low-current high-voltage "secondary." In operation, D.C. obtained from the car's battery is passed through the coil's primary in periodic pulses as a set of contact breaker points open and close. Each time the circuit is completed and broken, the resulting rush of current develops the high voltage required. To obtain a fairly high voltage, relatively large currents must be passed through the primary coil, with this current broken and established by the breaker points serving as a momentary switch. Breaking a large current causes the contacts to spark and arc, resulting in pitting and corrosion, and reducing contact life. To minimize arcing, a small capacitor is generally connected across the contacts. This capacitor, unfortunately, introduces a small time lag in establishing and breaking current flow. As a car's engine is revved up, the contact points can remain closed for shorter and shorter intervals. This, added to the time lag introduced by the capacitor, results in an effective drop in primary current and in the high voltage developed as the rate of contact operation is increased. As a result, ignition voltage may decrease appreciably at higher engine speeds, resulting in an overall drop in efficiency. Transistorized ignition systems have been introduced to overcome the disadvantages of such conventional systems.

In operation, a power transistor is used to control the current supplied to the ignition coil's "primary." Its collector and emitter electrodes are connected in series between the battery and the coil. The heavy duty breaker point contacts and shunt capacitor are then replaced with light duty contacts which, in turn, are used to apply a control bias to the transistor's base electrode. Since the base bias current is very small, relatively little contact arcing occurs and very long contact life is achieved. At the same time, the transistor's rapid response maintains a good primary current regardless of contact breaking rate, thus maintaining a fairly constant high ignition voltage at any engine speed.

Originally introduced as optional equipment, the use of transistorized ignition systems is increasing rapidly. Such systems may be serviced using standard technique, with circuit tracing and checkout being an extremely effective method due to simple wiring arrangement used. Occasionally, the power transistor and its associated ignition coil may be permanently sealed in a single package; here, a defect in either component may call for the replacement of the entire assembly.

CONTROLS AND ALARMS

Typically, basic control circuits and burglar and fire alarm units are relatively simple, at least when compared to radio receivers, TV sets, and other equipment we have reviewed in earlier Sections. This very simplicity served, to some extent, to limit the transistor's early applications in such devices; an equipment manufacturer, for example,

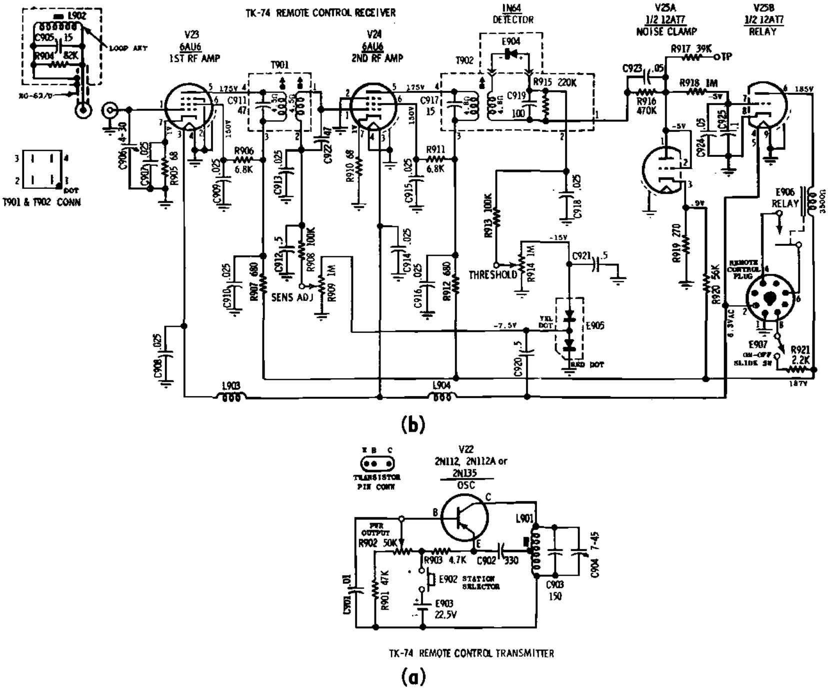

Fig. 9-21: The circuit of a transistorized remote control transmitter (MOTOROLA TK-74) is shown at (a). The circuit of the vacuum-tube operated receiver with which it is used is shown at (b) for reference purposes. This receiver and transmitter are used as accessories with the MOTOROLA TS-539 series of television receivers.

may have had difficulty in justifying the transistorization of a tube-operated item which had proven itself in the field and which, at the most, required but a handful of electrical components. However, the transistor is starting to find increased uses in these general fields, and its applications will undoubtedly multiply rapidly as manufacturers and designers become familiar with its full potentialities. Here, one or another of its basic characteristics may make it more attractive than previously used or alternate types of amplifying devices. In portable remote control instruments, for example, its small size and low power requirements are of primary importance. In industrial control equipment, on the other hand, size and power requirements often are not critical; here, the transistor's ability to amplify small direct currents, its reliability, and its long service life may become its most attractive features. In still other types of equipment, the unit's ability to operate instantly without "warm-up" and without the need for stand-by power may be its major asset.

Not all transistor control applications are limited to industrial and commercial equipment. Some manufacturers of consumer products have used transistor control circuits; others, automobile manufacturers, for example, are seriously considering its possible applications to their own fields. As time goes by, then, the repair and maintenance of transistorized control equipment will open ever wider as a new field in which the service technician can utilize his skills and talents.

TV REMOTE CONTROL. An interesting application of a transistorized control device to a consumer product is found in the Motorola Model TK-74 Wireless Remote Control assembly. Designed for use in all television receivers incorporating the Motorola No. TS-539 TV chassis, the TK-74 consists of two basic units . . . (a) a transistorized low-power radio transmitter, and (b) a vacuum tube T.R.F. receiver; the schematic diagrams of both units are given in Fig. 9-21. The basic TS-539 chassis, a conventional tube-operated TV receiver, is equipped with an electro-mechanical automatic tuner driven by a small electric motor. Normally, channel selection is accomplished by depressing a front-panel push-button, which, in turn, actuates the tuning mechanism. The TK-74 assembly, when added to the TS-539 chassis, permits remote operation of the TV set's tuning mechanism by depressing a push-button on the hand-held transistorized transmitter. This causes an R.F. signal to be radiated which is picked up by the receiver, amplified, detected, and used to close an electromagnetic relay. The relay contacts, then, serve in place of the set's front-panel push-button in actuating the tuning device.

Referring to Fig. 9-21(a), the transmitter consists of a *PNP* transistor wired as a standard Hartley oscillator. The common-base configuration is used. Oscillator frequency is determined by a tuned circuit made up of a loop antenna coil L901, fixed capacitor C903, and trimmer C904. A tap on the coil is coupled through D.C. blocking capacitor C902 to the transistor's emitter to furnish the feedback necessary to start and sustain oscillation. R903 serves an emitter load resistor. Base bias is furnished through R901 and *Power Output* control R902, bypassed by C901. Operating power is supplied by a built-in 22.5 volt battery, E903, controlled by a SPST *Station Selector* push-button switch, E902. Operating frequency is 2.881 megacycles.

COMPLAINT	TROUBLE IN	PROCEDURE
Doesn't work.	a. Transmitter – Fig. 9-21 (a). b. Receiver "dead" or "weak." c. Relay tube or relay. d. Tuner motor circuit open.	a. Check battery; output and f.* b. Troubleshoot.** c. Replace defective part. d. Check with ohmmeter, correct.
Intermittent operation	a. Transmitter. b. Receiver or relay circuits. c. Automatic tuner circuits.	a. Replace battery; check switch. b., c. Troubleshoot using voltage tests and "brute force" technique – see Section 1.
Unwanted station selection	a. Interference from ignition systems, lightning, electrical appliances, amateur stations, etc. b. Interference from set's horizontal sweep.	a. Reorient receiver antenna. Check shielding. Adjust receiver Sensitivity and Threshold controls. See Fig. 9-21 (b). b. Poor contact to picture tube aquadag coating – increase contact area by taping 10" square piece of aluminum foil to coating; make sure grounding spring contacts foil with good tension.

NOTES: *Transmitter's output may be checked with 'scope (wide-band) or R.F. VTVM; frequency may be checked with a Communications Receiver, Grid Dip Meter, or Wavemeter. Should be 2.881 MC.
**Receiver may be checked out using standard vacuum-tube receiver techniques...Signal Tracing, Signal Injection, Voltage Analysis, etc. See Section 1.

TABLE 9-M: REMOTE CONTROL TROUBLESHOOTING CHART. Although applying specifically to the remote control system shown in Fig. 9-21, this Chart may be used as a general guide for servicing all types of transistorized (radio) remote control equipment.

The receiver circuit, shown in Fig. 9-21(b), is fairly conventional and need not be examined in detail. Basically, it consists of a shielded, tuned loop antenna, a two-stage transformer-coupled T.R.F. amplifier, a diode-type detector, and an output amplifier controlled by the detected R.F. signal and, in turn, operating a standard relay (E906). Tube filament and plate operating voltages are obtained from the TV chassis with which the receiver is used; a multi-conductor cable and appropriate plug are used for connecting the two units.

Basic servicing procedure for the TK-74 system is outlined in the Troubleshooting Chart given in Table 9-M. Listed here are typical complaints together with suggested checks and tests. Although applying specifically to the TK-74, this table may be used as a general guide in the service of any wireless (radio) remote control installation. The basic procedure when repairing these systems is to first isolate the defect causing the complaint to *either* the transmitter or receiver assemblies. While the two units are used together, they may be considered as independent pieces of equipment for service purposes. The transmitter's output may be checked using a Grid Dip Meter, Communications Receiver, or similar pick-up device, with care taken to check *both* relative power level *and* operating frequency. The receiver may be given a basic performance check by applying a signal obtained from another source, such as a spare transmitter or a R.F. Signal Generator. Once the defect is isolated to one of the two units, that piece of equipment may be checked out using conventional test techniques.

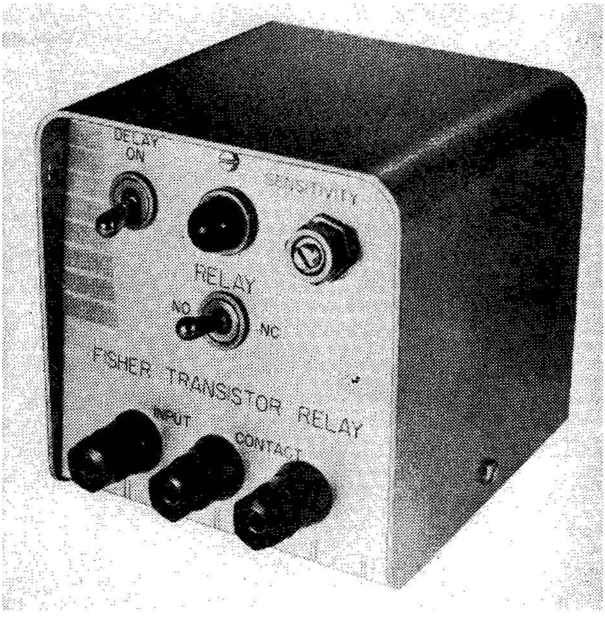

Fig. 9-22: A typical transistorized relay. Such relays are used frequently in control applications.

INDUSTRIAL CONTROLS. Commercial and industrial control equipment applications are virtually endless. It wouldn't be too difficult, for example, to fill a book larger than this one simply by *listing* individual applications. These range from the simple task of automatically opening a door in a supermarket when a shopper steps on a treadle switch to the complex control of dozens of heavy-duty production machines in an automated factory. *Automation* itself became possible only with the development of suitable electronic and electro-mechanical control systems. While practical control installations may become ultra-complex, requiring literally thousands of components in a complete system, the *basic* circuits employed, as mentioned earlier, are relatively simple. The "heart" of most control devices is a sensitive relay circuit. As a general rule, a piece of control equipment consists of a single or multi-stage amplifier driving an electromagnetic relay. The amplifier serves to increase the relay's effective sensitivity many times. The relay contacts, then, serve as a simple electrical switch, controlling the power applied to such devices as lamps, electric motors, solenoids, magnetic actuators, and so on, depending on the control equipment's specific application. Transistors are ideal for use in such equipment, for they are basically "current" amplifying devices, as opposed to the vacuum tube, which is basically a "voltage' amplifier. Electromagnetic relays, of course, are current-actuated units, and can be operated best by a current amplifier.

For some industrial and laboratory applications, a transistor amplifier, an electromagnetic relay, and a simple power supply circuit will be combined in a single assembly as an "ultra-sensitive" relay. It is then used as a conventional relay, with a control signal applied to its amplifier input in lieu of to a coil, and this, in turn, serves to open or close the relay's contacts. An instrument of this type is shown in Fig. 9-22. With a built-in three-stage transistor amplifier and line-operated power supply, this unit, the Fisher Model 30 Relay, can be switched with a control signal of as little as *12 microamperes,* with its relay contacts capable of switching non-inductive loads of 4.5 amperes continuously, or up to 10 amperes on an intermittent basis.

Generally speaking, direct-coupled transistor amplifiers are used in relay control circuits. The schematic diagram of a typical two-stage control amplifier is given in Fig. 9-23. Here, *NPN* (Q1) and *PNP* (Q2) transistors are used as direct-coupled complementary amplifiers, with the second stage (Q2) serving to operate a standard electromagnetic relay (RLY). Input resistor R1, in series with Q1's base, limits input signal currents, thus protecting Q1 against accidental damage. A fixed base bias is applied to this stage through a voltage-divider made up of R2 and *Sensitivity* control R4. Unbypassed emitter resistor R3 serves to stabilize circuit operation and to raise Q1's effective input impedance. Q2's base bias is supplied by Q1's collector current; Q2's amplified output current, in turn, operates the relay, with the relay's armature (ARM.), Normally-Open (N.O.) and Normally-Closed (N.C.) contacts acting to switch the load in an external circuit. C1, across the relay's coil, serves to bypass transients

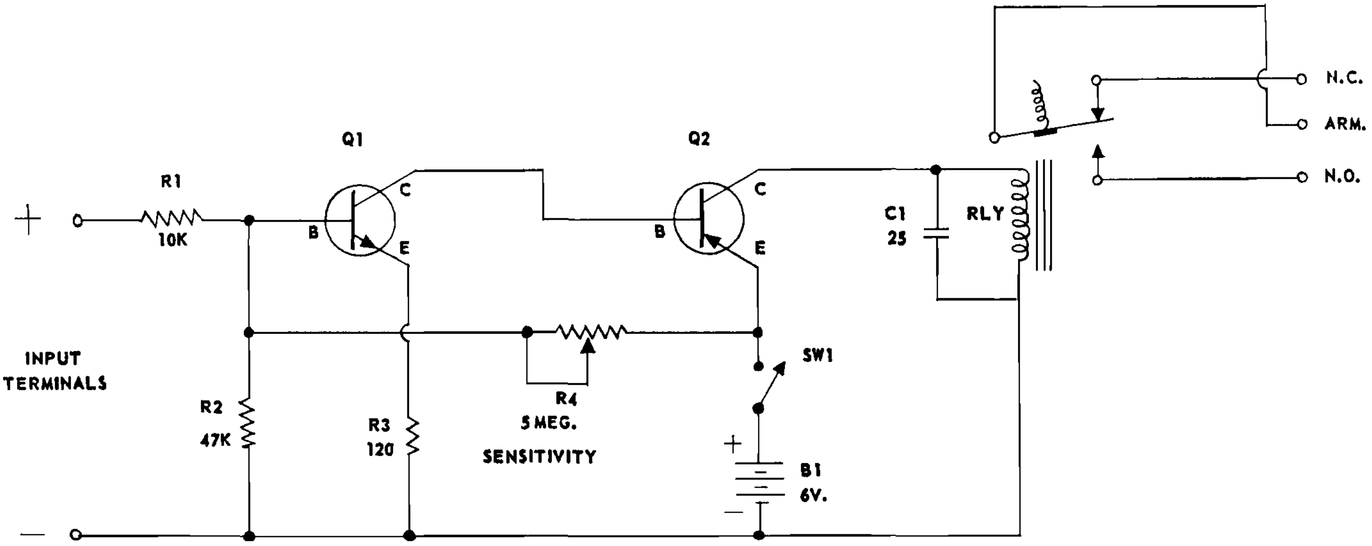

Fig. 9-23: A basic transistorized relay circuit. NPN (Q1) and PNP (Q2) transistors are used as a cascaded direct-coupled amplifier. A number of circuit variations are encountered in commercial equipment, but most employ direct-coupled amplifiers.

developed by sudden changes in Q2's collector current. Operating power is supplied by a single 6-volt battery, B1, controlled by a SPST switch, SW1.

In operation, the application of a positive-going input signal (as shown), amplified by Q1 and Q2, closes the relay. Several modes of operation are possible, depending on R4's adjustment and the type of input signal used. For example, R4 may be set so that sufficient bias is applied to Q1 to *close* the relay; afterwards, the application of a *negative-going* input signal to Q1 will cause the relay to open. A "lock-in" type of operation may be obtained due to a basic characteristic of electromagnetic relays. In these units, a larger coil current is required to close their contacts than to hold them closed; this is due, of course, to the smaller magnetic gap between the armature and pole piece when the relay is closed, permitting the coil to exert greater force. To obtain this type of operation, R4 is adjusted until Q2's normal collector current is enough to hold the relay closed, but not enough to close it, if open. Thereafter, the application of a small positive-going input signal to the Input Terminals will close the relay; the relay will then *stay closed* until SW1 is opened or until a relatively strong negative-going signal is applied to the unit's input.

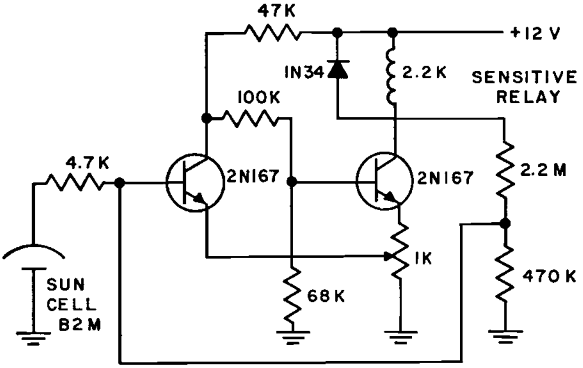

THE RELAY IS ENERGIZED WHEN A 100 WATT LAMP IS PLACED 5" FROM THE SUN CELL. THE VOLTAGE NEEDED AT THE SUN CELL TO OPERATE THE RELAY VARIES WITH TEMPERATURE AS FOLLOWS:

TEMPERATURE	VOLTAGE AT INPUT TO FLIP-FLOP	
	RELAY ENERGIZES	RELAY OPENS
23°C	0.14	0.17
40°C	0.09	0.13
60°C	0.04	0.09

Fig. 9-24: Schematic diagram of a transistorized photo-cell controlled relay. Here two NPN transistors are used as a direct-coupled amplifier.

In practical installations, the input "signal" applied to a circuit similar to that shown in Fig. 9-23 may be obtained from a variety of sources, depending on the control's ultimate application. Usually, the signal source is a sensing device of some type (generally called a *sensor*), such as a thermocouple (for temperature control), photocell (for light control), *Microswitch* (for pressure operation), fusible link for fire control), metal foil (for burglar alarm systems), or a moisture-sensitive plate (for humidity or dampness control). By the same token, the relay contacts may be used to operate a variety of devices, such as electric motors, heaters, fans, air conditioners, solenoids, alarm bells, or lights, depending on the overall function needed.

A somewhat different circuit is used in the light-triggered relay shown schematically in Fig. 9-24. Here a light-operated *Sun Cell* serves as a sensor. A two-stage direct-coupled amplifier is employed, with *NPN* types used in each stage. A diode is connected across the relay's coil to damp out transients developed by inductive kick on current surges. *Feedback* is provided between the input and output circuits, thus changing the basic amplifier into a direct-coupled "flip-flop" circuit, and causing a *rapid change* in collector currents whenever an initiating signal is developed by the light-sensitive cell.

Photocell operated electronic controls are widely used throughout industry and commerce. A few of the literally hundreds of applications for such controls are illustrated in Fig. 9-25.

ALARM SYSTEMS. In general, industrial electronic controls are used to actuate electromechanical production equipment, to open or close solenoid valves, to maintan constant temperatures by turning on heating (or cooling) units, and for similar jobs. However, very similar circuits are used in most *Alarm Systems*. Here, the signal obtained from a sensor indicates an undesired condition, and the relay contacts are used to sound an alarm bell or siren, signal a guard, turn on a light, open the valves in an automatic sprinkler system, to start a sump pump, or to carry out some other function which will alleviate the undesired condition. Typical alarm applications are outlined briefly below:

1) **BURGLAR ALARMS** – Several variations possible here. A photocell control and light beam set-up may be used, so that an intruder breaks the beam of light, causing the alarm to sound. Or a fixed current might be supplied over a series circuit including foil tape on glass areas, and closed contacts or *Microswitches* on doors and windows; here, if the circuit is broken at any point, the current flow is interrupted, with this detected by a standard control circuit (as in Fig. 9-23) and an alarm sounded.

2) **FIRE ALARM** — An arrangement similar to a series circuit Burglar Alarm may be used, but with fusible links or thermostatic switches making up the series circuit. Excessive heat melts the links or causes a switch to open, opening the circuit and sounding an alarm. At the same time, if desired, extra relay contacts may be used to turned on an automatic sprinkler system, and to signal the Fire Station.

Piling bags into stacks of exact quantities

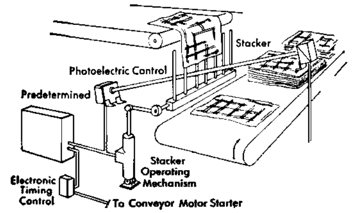

Automatic weighing and packaging control.

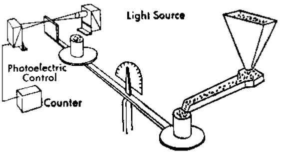

Sorting Cartons by Register Marks

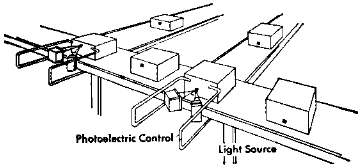

Board Sorting in Lumber Yard

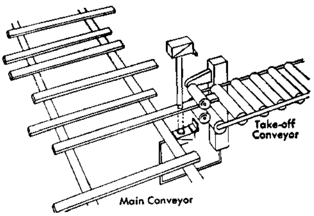

Filling Containers with different ingredients.

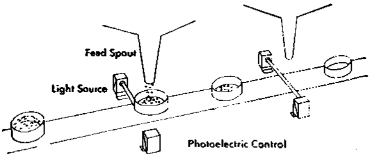

Each hopper is designed to deposit portion when release is operated by Photoelectric Control. As containers pass on the conveyor each ingredient is deposited automatically.

Automatic Car-washing Control

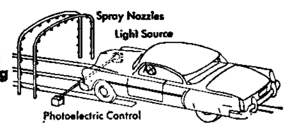

Fig. 9-25: Typical industrial and commercial photoelectric control applications.

3) **FLOOD ALARM** — Here the *sensor* can be two closely spaced electrodes arranged in a convenient depression. Rising water closes the circuit, actuating the alarm signal and, if desired, turning on a sump pump. Variations here include the use of a moisture-sensitive plate to obtain a *Humidity Alarm* or a float attached to a lever arm which, in turn, actuates a Microswitch.

4) **PRESSURE ALARM** — Here, a simple pressure switch serves as a sensor. This may be mounted in the side of a pipe line or duct, and acts through the control circuit to sound an alarm if pressure rises (or falls) a predetermined amount.

5) **SMOKE ALARM** — Here, a modified photocell system is employed, mounted high in a room or protected area. Rising smoke interrupts the light beam which, detected by the photocell and control circuit, sounds an alarm. A similar system might be used in a chimney to detect excessive smoke and to control furnace dampers, fuel injectors, or electrostatic precipitators.

6) **SOUND ALARM** — Sometimes used as a burglar alarm system. Here, a microphone serves as a sensor, with its output fed to a high-gain audio amplifier. The resulting audio signal is rectified by a simple diode, and the final D.C. applied to a standard control circuit. Extraneous noises or sounds above a preset level serve to operate the system, sounding an alarm. Thus, a burglar, attempting to "jimmy" a door or window, could be detected very easily.

COMPLAINT	TEST PROCEDURE	NOTES
Doesn't work	a. Check battery or power supply. b. Check interconnecting cables. c. Check adjustments, switches. d. Check sensor. e. Check amplifier, relay.	a. Check voltages under load. b. Watch for opens, shorts. c. Refer to Service Manual. d. Light source, photocell, pickup. e. Make sure signal actuates relay.
Insensitive	a. Check battery or power supply. b. Check adjustments. c. Check sensor. d. Check amplifier and relay.	a. See above. b. Readjust Sensitivity (if used). c. Be sure output is normal. d. Voltage (current) tests of each stage; check relay spring tension.
Works intermittently	a. Check battery or power supply. b. Check sensor. c. Check connecting cables, contacts and plugs (or jacks). d. Check amplifier and relay.	a. See above — check contacts. b. Try substitute if available. c. Try wriggling — watch for partial opens, shorts. d. Use "brute force" technique after voltage checks — see Section 1.

TABLE 9-N: GENERAL TROUBLESHOOTING CHART — CONTROL CIRCUITS. The procedures outlined may be used when servicing all types of transistorized controls.

Many variations are possible for specialized alarm applications, of course. For example, Fire and Burglar Alarm systems could be interconnected, so that an alarm is sounded for either condition; here, it is only necessary to connect the foil-contact system and fusible link-thermostatic switch system as one extended series network.

TROUBLESHOOTING. Control equipment and alarm systems, since they use almost identical circuitry, may be serviced using essentially the same basic techniques. Typical service complaints and suggested test procedures are outlined in the Troubleshooting Chart given in Table 9-N. When working with this general type of equipment, there is one important point to keep in mind. Most control and alarm devices are designed for *Fail-Safe* operation. In a control system, this means that a component or circuit failure will not result in dangerous operation; in an alarm device, this means that a circuit failure *will cause* the alarm to be sounded . . . this, of course, is desirable so that an equipment breakdown which may cause a loss of protection will not go unnoticed. Generally, Fail-Safe operation

Fig. 9-26: The CUBIC Model 503 transistorized frequency meter.

is obtained by arranging relay circuits so that the relay is in a "safe" position when open. In a Burglar Alarm, for example, the relay is normally *held closed;* thus, a power circuit or component failure will cause the relay to drop out, sounding the alarm. As a general rule, *separate* power sources are provided for control circuit and alarm device operation to insure system reliability.

TEST INSTRUMENTS

Basically, electronic test instruments employ the same general types of circuits found in audio amplifiers, radio receivers, TV sets, and other units discussed in detail in earlier Sections, and, of course, similar electrical components are used. From this, it is easy to see

Fig. 9-27: The DUMONT Differential Pre-amplifier, a transistorized device intended for instrument applications.

that the transistor's inherent characteristics which led to its widespread use in more mundane devices offer equal advantages to test instrument design engineers. As a result, transistorized test instruments have already been introduced by several manufacturers, and most firms in this field have a variety of designs "in the works" for future release. As this is written, few, if any, service-type testers employ transistors, and current applications are confined chiefly to industrial, laboratory, and medical test instruments. *Sound Level Meters* and *Electronic Stethoscopes,* discussed in Section 2, represent typical instruments used in the industrial and medical fields, respectively. Typical transistorized laboratory instruments are shown in Figs. 9-26, 9-27, and 9-28. The unit shown in Fig. 9-26 is a Model 503 direct-reading audio *Frequency Meter* manufactured by the Cubic Corporation. DuMont's Model 407 instrument *Pre-Amplifier* is shown in Fig. 9-27, while a detailed view of its basic "chassis" is given in Fig. 9-28.

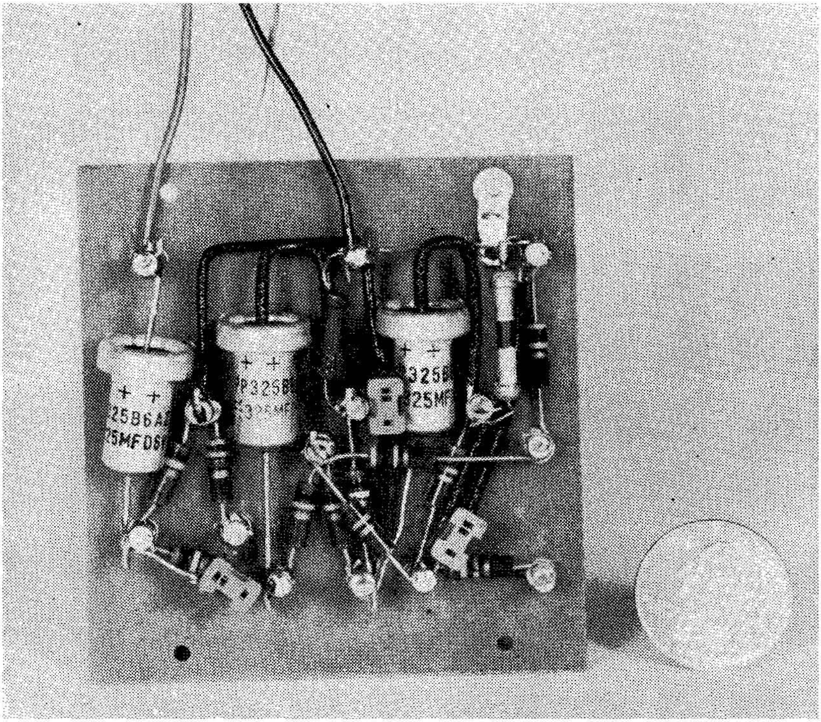

Fig. 9-28: Basic "chassis" of the instrument amplifier shown in Fig. 9-27. A quarter is included for size comparison purposes. Three transistors are used in this device.

Test instrument circuit designs vary widely, depending on individual manufacturer preferences, on the operating conditions to which it may be exposed, on the accuracy of calibration needed, and, of course, on its eventual application. Obviously, an instrument intended for bench use in an air-conditioned hospital or industrial laboratory, where temperatures may not vary more than a few degrees year-around, can be designed and built differently than, say, a piece of field equipment which may be exposed to desert heat one month and to artic cold the next, with a good measure of jouncing and bouncing in jungle dampness and dusty areas in the interim. By the same token, an instrument designed for rapid troubleshooting of home receivers needn't be built to the same specifications as a unit used for precision measurements accurate to the proverbial "gnat's eyebrow."

However, electronic test instruments may be grouped into three general classes regardless of their specifications, individual circuit designs, construction, or final applications. These are . . . (a) *Test Amplifiers,* (b) *Measuring Devices,* and, (c) *Signal Generators.* Instruments belonging to the first group are basically signal-handling devices; they receive a signal from some source, such as an antenna, microphone, transducer, or photocell, and then amplify or modify it prior to application to another device. Equipment belonging to the second group is used to determine the quantitative or qualitative characteristics of an electrical signal, physical object, or other unit. Finally, instruments found in the last group serve as signal sources, developing electrical signals with specific frequency, amplitude, or waveform characteristics. Let's take a quick look at the test instruments found in each of these general classes.

TEST AMPLIFIERS. Within this grouping are such instruments as Electronic Stethoscopes, Instrument Pre-amplifiers (see Figs. 9-27 and 9-28), Signal Tracers, Recording Oscillographs, Electrocardiographs, and so on. In general, the circuits used are very similar to those found in audio and video amplifiers, with the instrument using from one to as many as ten or twelve stages, depending on the gain and power output needed and on the amplitude of the input signal. There may be special refinements such as frequency response control circuits (analogous to *Tone* controls in audio equipment), calibrated attenuators, and clipper or limiter circuits to modify the waveform of the signal handled. Direct-coupled amplifiers are used extensively in medical electronic equipment; these may be very similar to the control amplifier shown in Fig. 9-23, but with additional stages added. Resistance-coupled amplifiers are used more often in Instrument Preamplifiers and in Electronic Stethoscopes. If the instrument handles a limited range of signal frequencies, tuned interstage transformers or conventional band-pass filters may be incorporated into the unit's circuit.

Power output levels vary considerably, depending on the instrument's intended application. An Electronic Stethoscope, for example, powers a small earphone, and may have to deliver an output of 1 to 10 milliwatts. A Signal Tracer, on the other hand, generally drives a built-in PM loudspeaker, and may have to deliver signal powers up to one-quarter or one-half watt. In other instances, a Test Amplifier's power level is not too important, and it is rated in terms of output voltages; an example, here, is the instrument illustrated in Figs. 9-27 and 9-28, which delivers a signal on the order of 15 millivolts. By the same token, frequency response characteristics depend on the signals handled. Recording Oscillograph and medical instrument amplifiers have a reasonably flat response from D.C. (zero cps) up to, at the most, a few KC. A Signal Tracer's response is generally from 20 cps to about 8 or 10 KC. The DuMont Model 407 Preamplifier has a response from 0.15 cps to 10 KC.

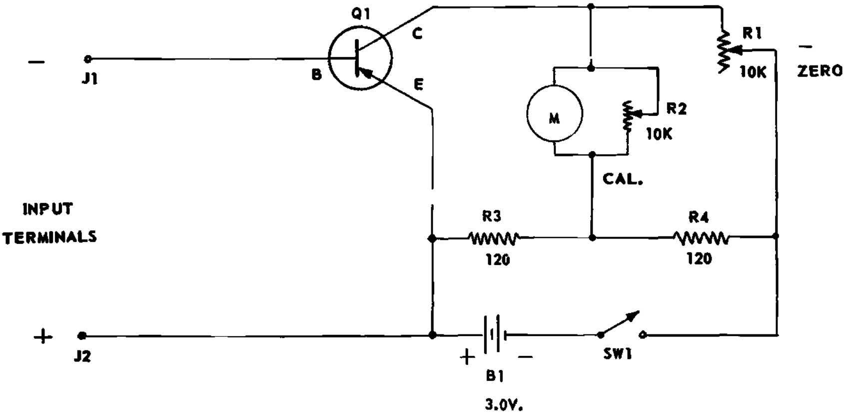

Fig. 9-29: Typical transistorized meter circuit. Commercial instruments may use a number of variations of this basic circuit, including preamplifier stages, voltage dividers (or range multipliers), and, in frequency meters, clippers and differentiation circuits.

MEASURING DEVICES. Typical instruments within this class are transistorized Voltmeters, Wattmeters, Frequency Meters (see Fig. 9-26), Sound Level Meters, Wavemeters, Impedance Bridges, Oscilloscopes, Field Strength Meters, Transistor Analyzers and Testers, Light Meters, Vibration Analyzers, Distortion Analyzers, Insulation Testers, Ph Meters, and Electrometers. Often, the circuits found in these instruments are very similar to those used in Test Amplifiers, but with the addition of a visual indicating device, such as a D'Arsonval meter or a cathode ray tube (as in an Oscilloscope). For ex-

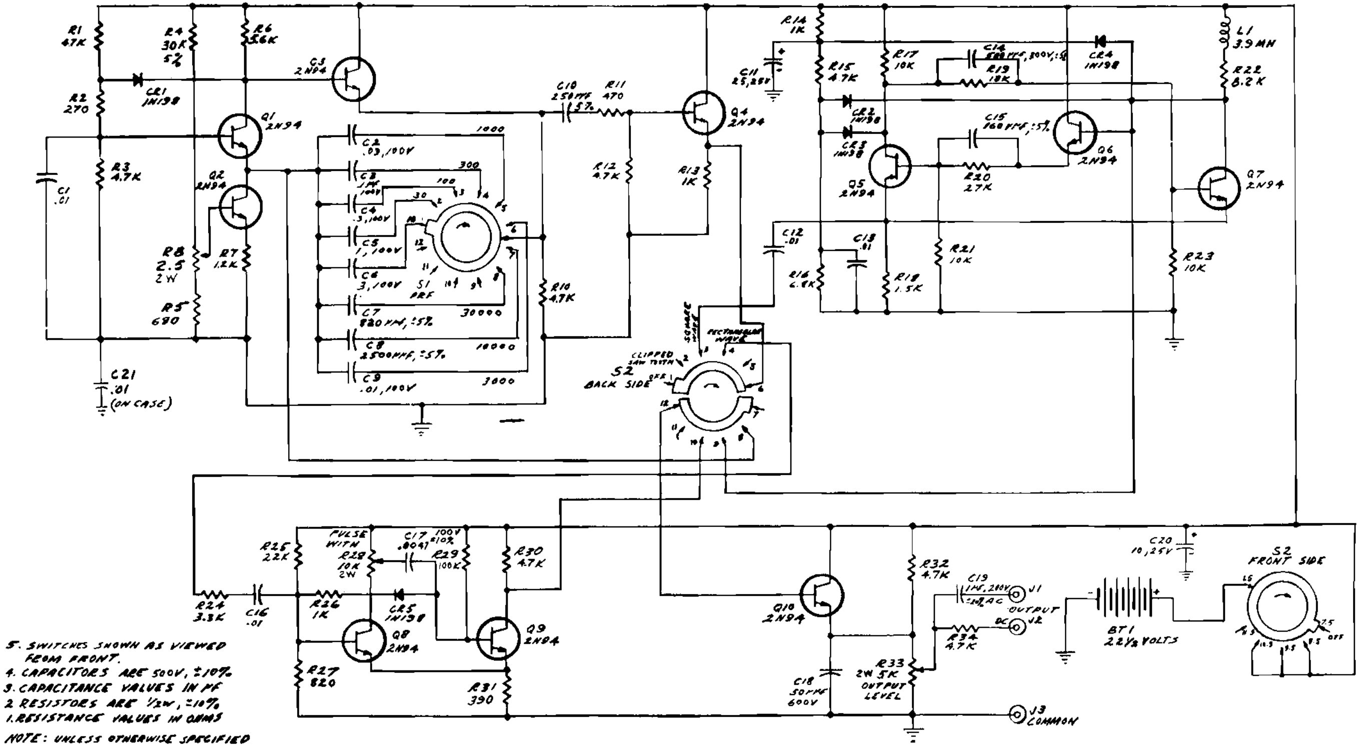

Fig. 9-31: Schematic diagram of the Model 500 Waveform Generator.

ample, a Sound Level Meter is essentially a high-gain audio amplifier fitted with a built-in microphone and with its output fed to an especially calibrated A.C. Voltmeter. Thus, the transistor circuitry used may serve only to increase the overall sensitivity of an electro-mechanical measuring device rather than being a functional part of the measuring technique. In a R.F. Wavemeter, as a further example, actual measurements are made with a calibrated tuned circuit; here, a transistor amplifier and detector are used with a basic meter movement just to indicate when the tuned circuit is adjusted to exact resonance.

Fig. 9-30: The CUBIC Model 500 Waveform Generator. This transistorized instrument can be used to supply saw-tooth, square, and pulse signal waveforms.

The Vacuum Tube Voltmeter (VTVM) is one of the most popular of service and laboratory instruments. Basically, this general type of instrument is simply a standard electro-mechanical D'Arsonval meter movement, but with a vacuum tube amplifier added to increase the meter's effective sensitivity. A similar approach is used in the design and construction of Transistor Voltmeters (TVM). A typical circuit arrangement is shown in Fig. 9-29. A *PNP* transistor (Q1) in the common-emitter configuration serves as a direct-coupled current amplifier. Its output is fed to a bridge circuit made up of R3, R4, R1, and its own emitter-collector resistance. R1 is made variable to compensate for Q1's leakage currents, and thus becomes a *Zero* adjustment control; similar controls are found in VTVMs. A shunt resistor, R2, is connected across the basic meter movement (M) to adjust its full-scale reading, and hence serves as a *Calibration* control. Power is supplied by a small battery, B1, controlled by a SPST switch, SW1. In operation, the application of a small D.C. current to Q1's base-emitter circuit results in a change in emitter-collector resistance. Q1 draws more collector current, the bridge circuit is unbalanced, and an up-scale reading is obtained on the meter (M). Since Q1 supplies a current gain of from 10 to 50 (or more, depending on the transistor used), it acts to increase the effective sensitivity of the meter movement (M). If additional gain is needed, one or more direct-coupled stages made be added ahead of Q1. This basic circuit is found in slightly modified forms in many types of transistorized instruments; often, a conventional resistive voltage-divider will be used in the transistor's input circuit to permit a choice of operating ranges.

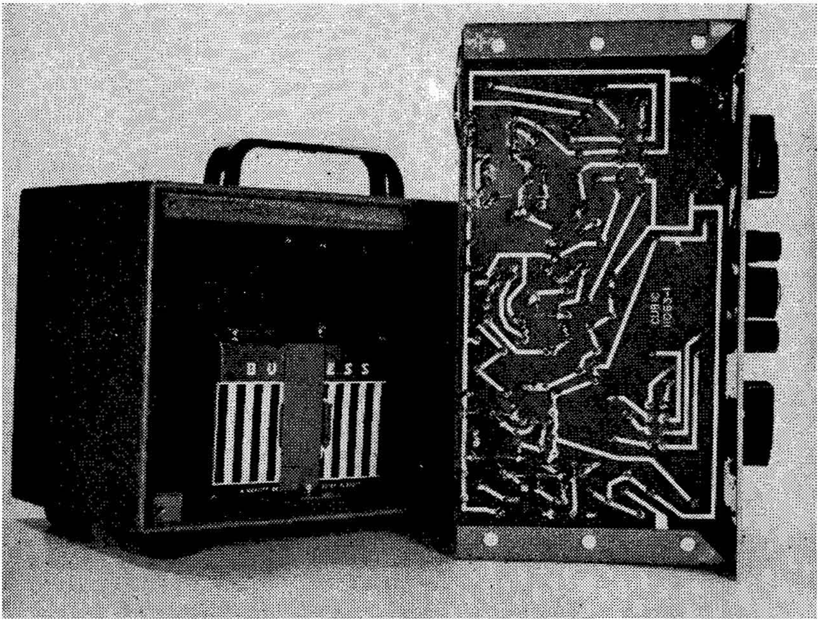

Fig. 9-32: Interior view of the instrument shown in Fig. 9-30. An etched circuit "chassis" is used. The power supply battery is mounted in the instrument's carrying case.

SIGNAL GENERATORS. Most electronic equipment handles electrical signals of some type. A radio receiver, for example, picks up, selects, amplifies, and detects R.F. signals, then goes on to amplify the resulting audio signal before applying to its output device (loudspeaker or earphones). To adequately check the performance of electronic equipment, suitable Signal Generators must be available. These serve to furnish test signals of known frequency, amplitude, and waveshape as may be needed by the units tested. Included in this general grouping, then, are such instruments as R.F. Signal Generators, Sweep Generators, Audio Sine-Wave Generators, Square-Wave Generators, Noise Generators, Pulse Generators, Ultrasonic Generators, Cross-Hatch Generators, Marker Generators, and Frequency Calibrators. The last instruments are essentially crystal-controlled single-frequency R.F. Signal Generators. As a general rule, a basic Signal Generator consists of a calibrated variable frequency oscillator and a one to three stage amplifier, plus a power supply. The amplifier may serve to increase signal amplitude, but, more often, is used to provide adequate isolation between the oscillator and the instrument's output load. Calibrated output attenuators are generally provided and, occasionally, a meter to indicate signal levels. In the case of R.F. Signal Generators, a second signal (audio) is provided by another oscillator, with the circuit arranged so that one may be used to modulate the other. A Sweep Generator differs from this basic approach in that its operating frequency is not fixed but is constantly

Fig. 9-33: The CUBIC Model 502 Pulse Generator.

shifted electronically (or electro-mechanically) to "sweep" a range of frequencies; these instruments are used, of course, for frequency response tests and circuit Alignment. Most transistorized Signal Generators employ circuits which correspond to those found in similar tube-operated instruments as far as basic functions are concerned. Commercially manufactured transistor-operated test generators are illustrated in Figs. 9-30 through 9-35. All of these are manufactured by the Cubic Corporation and are intended for electronic laboratory applications. Their circuits typify current practice.

Exterior and interior views of the Model 500 Waveform Generator are given in Figs. 9-30 and 9-32, respectively; the instrument's schematic diagram is given in Fig. 9-31. Using ten *NPN* transistors and five semiconductor diodes, this unit can supply clipped sawtooth and pulse output signal waveforms from 10 PPS (Pulses Per Second) to 50,000 PPS, and square-wave signals from 5 PPS to 25,000 PPS. Pulse width can be varied from 5 to 200 microseconds. Powered by

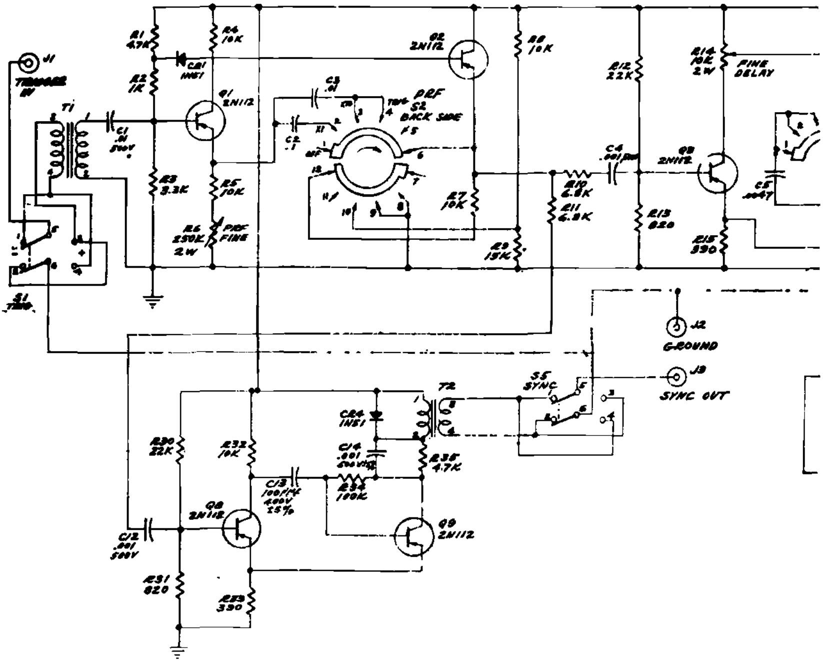

5. SWITCHS VIEWED FROM FRONT.
4. CAPACITORS ARE 100V, ±20%
3. CAPACITANCE VALUES IN µF.
2. RESISTORS ARE 1/2W, ±10%
1. RESISTANCE VALUES IN OHMS
NOTES : UNLESS OTHERWISE SPECIFIED

Fig. 9-34: Schematic wiring diagram of the Model 502 Pulse Generator.

a self-contained 22.5-volt battery, the Model 500 can supply a variable output signal up to a maximum amplitude of 7 volts across its 2000 ohm output impedance. This type of instrument may be used for general circuit checks of audio and video amplifiers, and operational tests of clipper, limiter, sync and sweep circuits. It is also useful for Square-Wave Analysis tests (see Section 10).

The Model 502 Pulse Generator, shown in Fig. 9-33, is designed for laboratory and field operational tests of video amplifiers, sync and sweep circuits, radar and sonar equipment, nuclear counters, and servo systems; its schematic circuit diagram is given in Fig. 9-34. Powered by a single 22.5-volt battery with an operating life of 400 hours, this instrument uses nine *PNP* and three *NPN* transistors, plus nine semiconductor diodes. It can supply positive or negative going output pulses from 50 to 50,000 PPS, with amplitudes of up to 20 volts across an 800 ohm load.

Designed for use with an Oscilloscope to permit the visual display

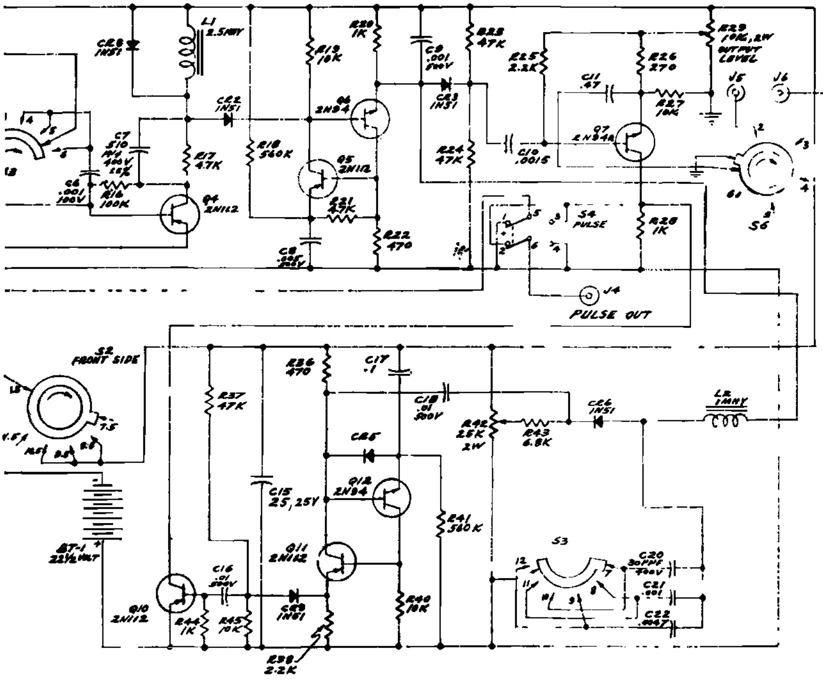

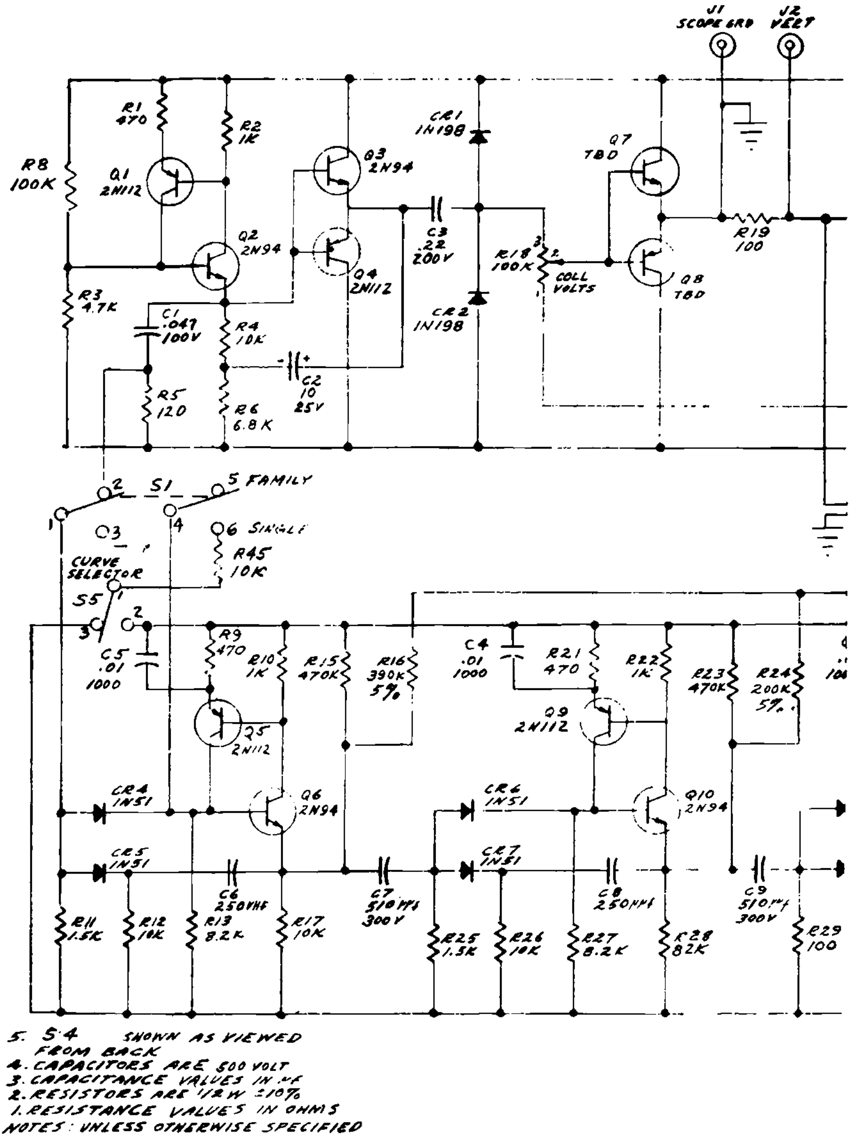

Fig. 9-35: Schematic wiring diagram of the CUBIC Model 504 Transistor Curve Tracer. Transistorized itself, this instrument is used in conjunction with a standard Oscilloscope to provide a visual display of transistor characteristic curves.

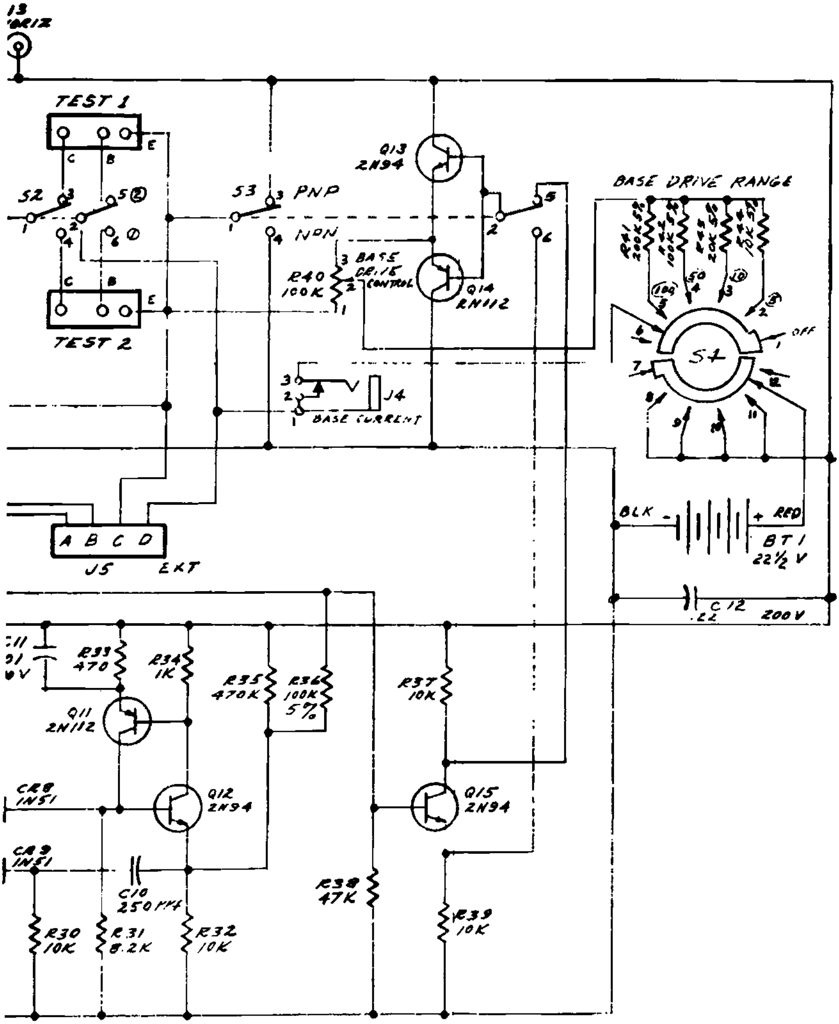

TRANSISTOR CURVE TRACER
MODEL 504

CUBIC

of transistor characteristic curves, the Model 504 Transistor Curve Tracer is basically a test generator supplying variable base current and collector voltage signals. The instrument's schematic diagram is given in Fig. 9-35. A total of 15 transistors are used in its circuit, with 7 *PNP* units and 8 *NPN* types; nine diodes are employed. Operating power is supplied by a 22.5-volt dry battery. Suitable for tests of both *NPN* and *PNP* junction transistors, the Model 504 can supply a base current drive signal in eight steps, permitting the simultaneous 'scope display of a full "family" of transistor characteristic curves. This instrument finds its application in schools and colleges, in the Quality Control groups of transistorized equipment manufacturers, and in the Production Test Departments of semiconductor producers.

TROUBLESHOOTING. Service failures of electronic test equipment, whether tube or transistor-operated, is the exception rather than the rule, for most of this equipment is built to higher standards than are applied to competitively-priced consumer products. Better quality components are used, ample derating is allowed, more rigorous production tests are followed, and stricter quality control is employed. Defects can develop, of course, if the equipment is physically abused or if improper operational procedures are followed. As in most transistorized equipment, the majority of service complaints are the result of defective batteries. The next most common cause of equipment failure is a breakdown in a mechanical component, such as a rotary or toggle switch, a connector jack, or in a tuning or control mechanism. After years of service, other defects which may be encountered include leaky or partially open electrolytic capacitors or circuit leakage due to the gradual accumulation of dust and dirt.

Common industry practice is to return defective electronic test equipment to the original manufacturer when defects develop. This permits the manufacturer to recheck and recalibrate the equipment after service and, often, to incorporate design improvements which may have been introduced in later models. In some instances, however, defective test equipment can not be returned for factory service, usually because it can not be spared for the time required for such repairs. In such cases, the general Troubleshooting Chart given in Table 9-O may be used as a guide for servicing these instruments. Here, the common complaints encountered in the three basic classes of electronic test instruments (as outlined above) are listed, together with suggested test techniques, and an indication of typical circuit defects which may cause each complaint.

ATOMIC RADIATION TEST INSTRUMENTS. The increasing use of Atomic Energy and nuclear powered devices in industry and commerce has led, quite naturally, to the introduction of several types of

TYPE OF INSTRUMENT	COMPLAINT	TEST TECHNIQUES	LOOK FOR								
			Weak Battery	Low gain transistor	Leaky transistor	Open transistor	Defective bandswitch	Off tolerance parts	Leaky capacitor	Loose connection	Adjustments incorrect
TEST AMPLIFIERS – Stethoscope, instrument preamp, 'scope amplifier, audio Signal Tracer, etc.	a. Dead or weak.	Troubleshoot as conventional audio amplifier, taking into account frequency response. See Sections 2 and 3.	*	●	●	●			●	●	●
	b. Distortion.		*		●			●	●		●
	c. Noisy.						*			*	
	d. Intermittent.						*		●	*	
	e. Control malfunction.				●		*				*
MEASURING DEVICES – Multimeters, wavemeters, frequency meters, oscilloscope, etc.	a. Doesn't work.	a. Voltage analysis.	*		●	●	●	●	●		●
	b. One band off.	b. Check bandswitch, components used on that band.	●				*	*	●	●	●
	c. Meter off-scale.	c. Check for leaky transistors, coupling capacitor.	*		●			●	*		●
	d. Calibration off.	d. Check adjustments; stage operation.	*	●	●			*	●		*
SIGNAL GENERATORS – Audio, R.F. Oscillators, Sweep Generator, Pulse Generator, Curve Tracers, etc.	a. Doesn't work.	a. Check battery, stage voltages.	*		●	●	●	●	*	●	*
	b. One band off.	b. Check bandswitch, components used on that band.	●	●	●		*	*	●	●	*
	c. Low output.	c. Check battery, drive to output amplifier.	*	●				●			*
	d. Waveform distortion.	d. Check waveform to output amplifier.	*	●	●			●	*		*
	e. Off frequency.	e. Check adjustments; components in frequency determining network.	*				●	*	●		*

TABLE 9-O: GENERAL TROUBLESHOOTING CHART FOR TRANSISTORIZED INSTRUMENTS. This Chart lists both test procedures and typical defects. It may be used as a guide for servicing any type of test instrument.

specialized Radiation Test Instruments. Where these instruments are used in field work, they must be battery-powered and, often, are transistorized. Perhaps the most common item encountered in general work is the Radiological Survey Meter or portable Geiger Counter. These units serve to indicate radiation levels and are used extensively not only in Atomic Energy installations, but by prospectors searching for deposits of uranium and thorium ores. A typical instrument of this type, the Universal Atomics Model V-700, is shown in Fig. 9-36.

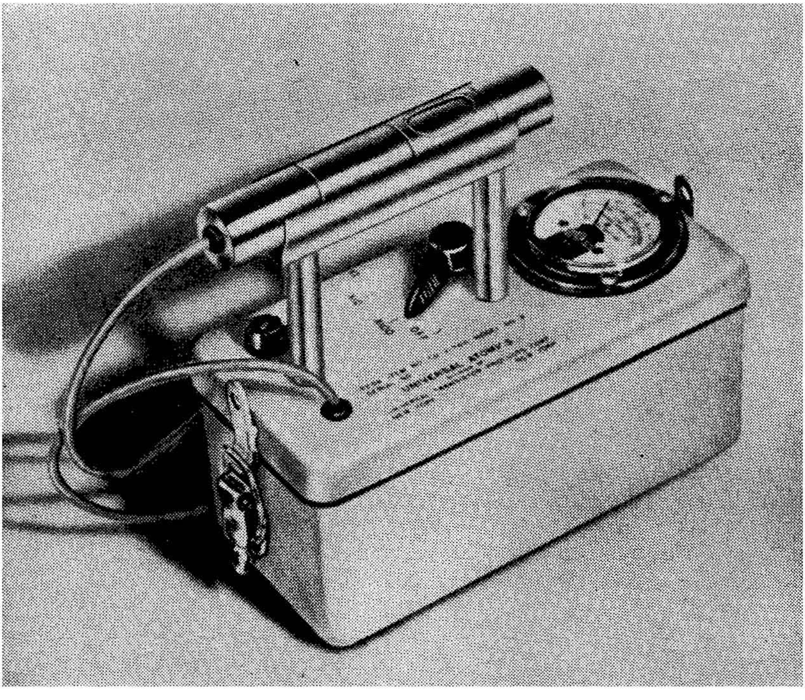

Fig. 9-36: UNIVERSAL ATOMICS Model V-700 Radiological Survey Meter (Geiger-Counter).

This unit is fully transistorized and is powered by five size "D" flashlight cells. It is capable of measuring radiation levels up to 50 milliroentgens/hour (or 50,000 pulses/minute) in three ranges, and is equipped with both a built-in meter and output jack for earphone operation. The meter is calibrated in both milliroentgens/hour and CPM (Counts-Per-Minute). The Geiger-Mueller tube assembly is normally mounted on the instrument's handle, but can be snapped off for use as a probe; this assembly is equipped with a window which may be opened to admit beta radiation. The instrument's schematic diagram is given in Fig. 9-37, while its etched circuit board chassis layout, showing the location of major components, is diagrammed in Fig. 9-38.

To understand the operation of this instrument, we should first review briefly the basic operation of the Geiger-Mueller counter tube. Such a tube consists of a thin sealed metal shell with a fine metal rod or wire suspended along its axis; the wire is insulated at both ends and brought out, generally, through a glass seal. The tube is filled with a mixture of special gases under very low pressure. In use, a high D.C. voltage is applied between the outer shell, serving as a cathode, and the axial wire, which serves as an anode. If an atomic particle or quanta of radiation enters the tube, the gas is ionized, permitting a current pulse between the tube's anode and cathode. Each time a particle passes through the tube, another pulse is developed. Since the number of freely moving atomic particles or atomic radiation quanta depends on radiation field strength, the frequency of the pulses is proportional to radiation field strength.

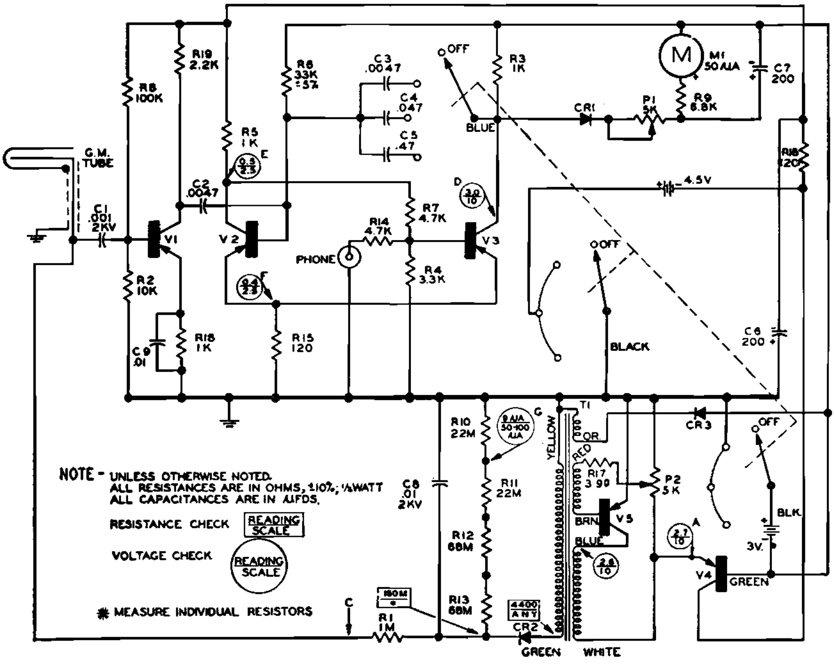

Fig. 9-37: Schematic diagram of the Model V-700 Survey Meter. The circuit used is typical of that employed in transistorized Geiger-Counters, whether intended for industrial applications, surveys, or prospecting.

Referring, now, to the schematic diagram, we see that this in-

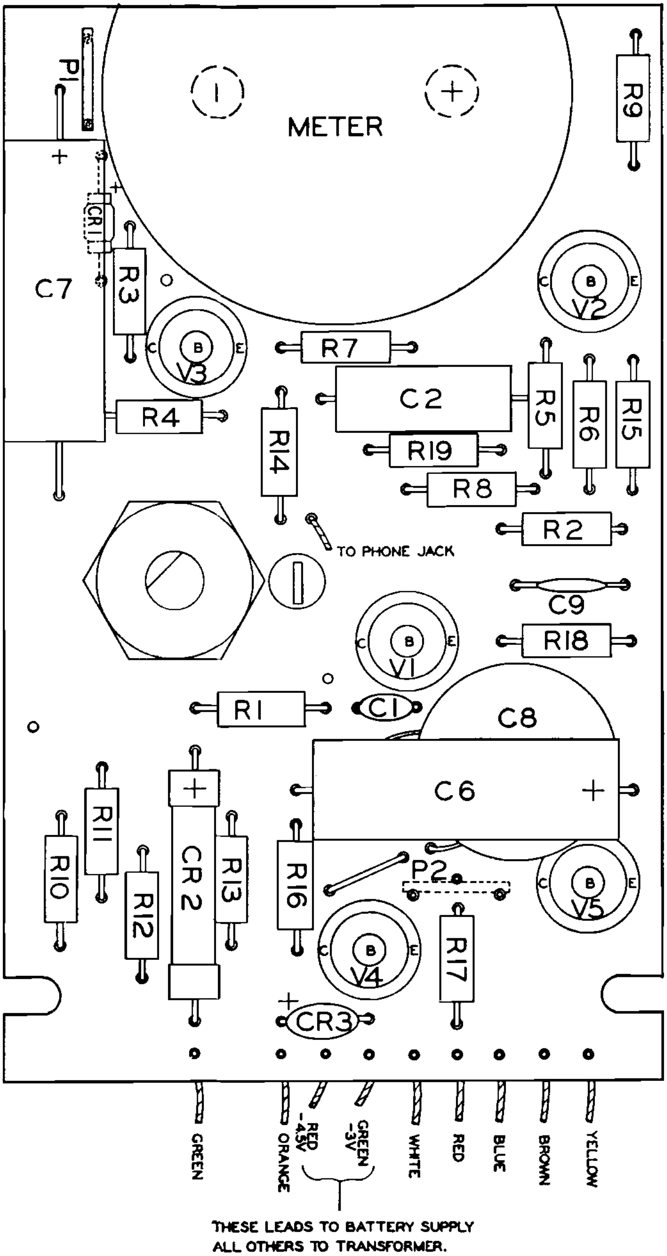

THESE LEADS TO BATTERY SUPPLY
ALL OTHERS TO TRANSFORMER.

Fig. 9-38: Model V-700 chassis layout diagram. Refer to Fig. 9-37 for identification of circuit components.

strument uses five *PNP* transistors. A well-regulated high D.C. voltage (900 volts) is required for proper operation of the Geiger Mueller (G.M.) tube. This is obtained from the low-voltage battery power source by means of a transistorized power supply. V5 works as a common-emitter blocking oscillator, with transformer T1 serving both to provide the feedback necessary to start and sustain oscillation and to step-up the resulting A.C. signal to approximately 900 volts; this is then rectified by high-voltage semiconductor CR2 and filtered by C8. V5's base bias current is furnished by control P2 through series limiting resistor R17. The regulation needed is obtained by a combination of three circuit actions. First, a fixed load is connected across the output circuit; this is made up of series resistors R10, R12 and R13. Second, an extra winding is provided on T1 and this, in turn, is connected to biased diode CR3. If the voltage developed across this extra winding exceeds CR3's fixed bias, this diode can conduct, serving as an additional load on the supply. Finally, V5's emitter and base bias currents are supplied through a series regulator, transistor V4, which, in turn, has a constant bias applied to its base electrode.

In operation, the output pulses developed by the G.M. tube are coupled through C1 to common-emitter amplifier V1. Here, the pulses are amplified, with the output signal appearing across collector load R19 coupled through C2 to an emitter-coupled monostable multivibrator, V2-V3. Each pulse received through C2 triggers the monostable circuit through one cycle of operation, with its output being a constant width and amplitude pulse. The monostable multivibrator circuit's pulse width is determined by which of the three timing capacitors, C3, C4, or C5, are switched into the circuit, and this, in turn, determines the instrument's basic operating range. Continuing, the output pulses delivered by the multivibrator and appearing across V3's collector load, R3, are rectified by CR1 and applied through calibration control P1 to C7, which charges to a voltage directly proportional to the number of pulses per minute. This voltage, in turn, is indicated on the meter, M1. At the same time, the feedback pulses developed across V2's collector load, R5, and applied to V3's base through R7 (to achieve monostable multivibration action) are also applied through isolating resistor R14 to the earphone jack.

Most transistorized Geiger Counters are relatively sturdy instruments and seldom require service other than a periodic replacement of batteries and, at longer intervals, a replacement of the Geiger-Mueller tube. Where trouble does develop which is not easily corrected by replacement of these two components, it is best to carry out a systematic Service Procedure. Proper maintenance procedure for the V-700 is outlined in the Troubleshooting Chart given in Table 9-P. This Chart may be used as a general guide when servicing

STEP	MAINTENANCE PROCEDURE
1	Check batteries – Replace if defective, taking care to observe polarity. If unit still doesn't work, go to Step 2.
2	Replace Geiger tube – If instrument remains inoperative, open case and go to Step 3.
3	Visually inspect wiring – Watch for shorts, broken leads, obviously defective components. Replace any defective parts, re-install broken leads. If unit still inoperative, go to Step 4.
4.	Check High Voltage – Use Electrostatic Voltmeter or VTVM with high voltage probe to check between pins 1 and 3 of Geiger tube socket (tube and housing removed). Should be about 910 volts plus or minus 30 volts. (a) If voltage is below 900 volts, first check batteries under load. Two cells nearest hinge of battery bracket should measure at least 1.5 volts. Other cells should read over 1.0 volts. Replace weak cells. (b) If voltage still below 900 volts, use wooden dowel, plastic rod, or similar well-insulated tool to adjust P2 (see Fig. 9-37). (c) If voltage remains below 900 volts as P2 is adjusted over its range, check D.C. voltage from emitter of V4 to ground. There should be 2.7 volts (or more) here. If less, replace V4. If voltage is correct, and a reasonable voltage can be measured on collector of V5, replace V5. If no voltage can be measured on collector of V5, replace T1. If voltage is still low, replace CR2. (d) If voltage is higher than 940 volts, replace CR3. Once normal high voltage is obtained, if unit still doesn't work, go to Step 5.
5	Check Pulse Network and Integrating Circuit – Connect headphones and listen for clicks while tapping pin 1 of Geiger tube socket with insulated screwdriver. Take care not to short. Meter should deflect at same time with Range switch on X1 scale. (a) If no clicks are heard, repeat test at point "C" (Fig. 9-37). If clicks now heard, cable assembly is defective and must be replaced. (b) If no clicks are heard, check voltages on V1, V2, V3. If voltages are correct, replace C1. (c) If clicks are heard, but meter doesn't deflect, replace P1, CR1, and R9 in order. (d) If meter deflects but returns too quickly to "ZERO," replace C7. (e) If meter does not deflect after above steps, replace meter. If unit remains inoperative, trouble is an obscure one; go to Step 6.
6	Carry out Resistance and Voltage tests – Use at least a 20,000 OHMS/volt meter. Compare readings to values given in Fig. 9-37. (a) Make resistance tests with switch "OFF." (b) Make voltage tests with switch in "X100" position. These tests will permit isolation of defective component – replace and check out instrument's overall operation.

TABLE 9-P: TROUBLESHOOTING CHART FOR MODEL V-700 SURVEY METER. While this Chart applies specifically to the instrument shown in Figs. 9-36 and 9-37, it may be used as a servicing guide for the repair of all transistorized Geiger-Counters.

virtually all types of transistorized Geiger Counters, for most employ quite similar basic circuits. The chief differences encountered will be in slight refinements and modifications of the circuit given in Fig. 9-37. In low cost instruments, for example, the meter circuit may be omitted, and only earphone operation provided; here, the circuit would include the high voltage supply and a one to three stage audio amplifier.

The effects of atomic radiation on the human body are cumulative. To avoid excessive exposure, then, research scientists, technicians, nuclear engineers, and others working around radioactive material must keep a daily check on the amount of radiation to which they have been exposed. This permits them to keep their radiation "dose" within safe limits. A pocket type *Dosimeter* is used for this job. This is a relatively simple instrument, and is essentially a miniature electroscope; prior to use, it is *charged* with a moderately high D.C. voltage. Afterwards, it discharges slowly, with its discharge rate determined by the amount of radiation to which it has exposed. While Dosimeters themselves are physical instruments which do not employ electronic circuitry, a transistorized *Dosimeter Charger* may be used to supply the high D.C. voltage needed to calibrate these units. A typical instrument of this type is shown in Fig. 9-39, with its schematic diagram given in Fig. 9-40.

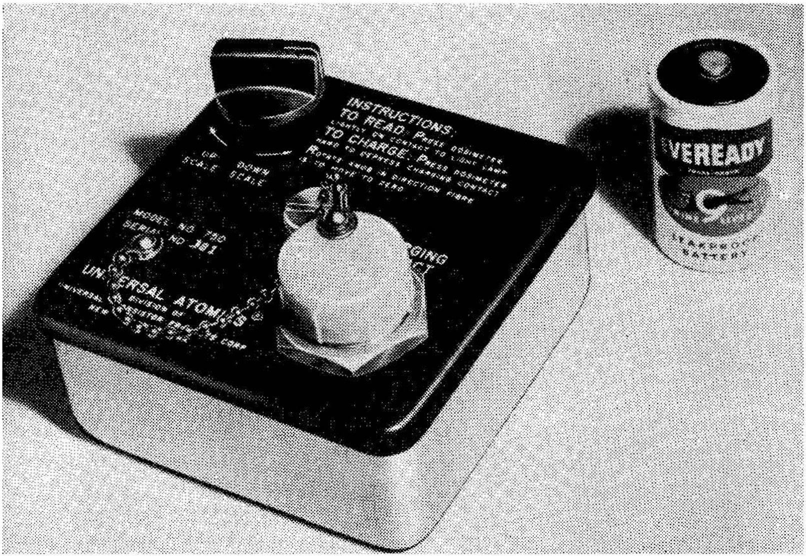

Fig. 9-39: UNIVERSAL ATOMICS Model 750 Dosimeter Charger. Powered by a flashlight cell, this unit supplies a high D.C. voltage for charging pocket type dosimeters.

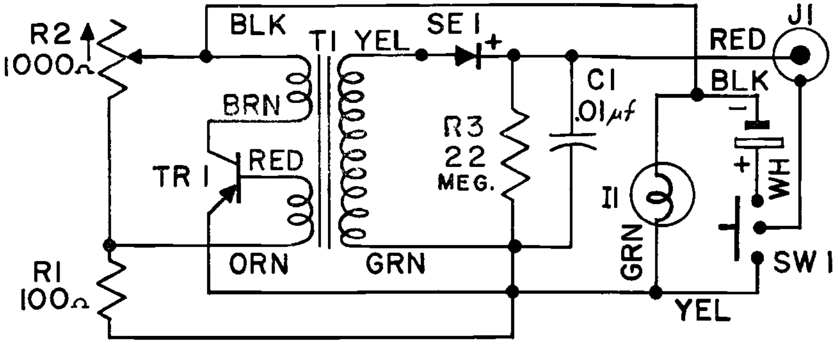

Fig. 9-40: Schematic wiring diagram of the Model 750 Dosimeter Charger. A single transistor is used in a modified Armstrong ("Tickler Feedback") oscillator circuit.

STEP	MAINTENANCE PROCEDURE
1	Check battery – Replace when lamp dims noticeably while charging switch SW1 (Fig. 9-40) is actuated. If lamp doesn't light, replace with spare; check original lamp with ohmmeter before discarding. If instrument still fails to charge, go to Step 2.
2	Visually inspect wiring – Open case and check for opens, shorts, broken components. Replace defective components, reconnect broken leads. If unit still doesn't work, go to Step 3.
3	Check for oscillator operation – Depress charging contact switch and hold instrument so that transformer T1 (Fig. 9-40) is near ear. Listen for buzzing sound. Rotate knob (R2) and listen for change in pitch of buzzing. (a) If buzzing sound can be heard, trouble is in high voltage section. Go to Step 4. (b) If buzzing sound cannot be heard, trouble is in oscillator circuit. Go to Step 5.
4	Check high voltage output – Using a 20,000 OHMS/volt meter on 250 volt scale, check across capacitor C1. If voltage is present, but less than 120 volts, replace C1. If voltage remains low, replace rectifier SE1.
5	Check oscillator circuit–Using 20,000 OHMS/volt meter on 2.5 volt scale, check voltage from TR1's collector to ground. If less than 1.0 volt, replace TR1. (a) If collector voltage is more than 1.0 volt, rotate knob (R2) through range. Voltage should change by approximately 0.2 volts. If no change occurs, replace TR1. (b) If voltage is more than 1.0 volt, and change occurs as R2 is rotated, transformer T1 is defective. Replace.

TABLE 9-Q: DOSIMETER CHARGER TROUBLESHOOTING CHART. Applying specifically to the instrument shown in Figs. 9-39 and 9-40, this Chart may be used as a general guide for the maintenance of any similar equipment.

Referring to the schematic diagram, we see that the unit is basically a transistorized power supply. A *PNP* transistor, TR1, is used as a common-emitter oscillator, with T1 serving both to provide the feedback necessary to start and maintain oscillation and to step up the resulting A.C. signal to about 200 volts. Base bias is provided by voltage-divider R1-R2, with R2 made adjustable to permit a control over exact output voltage. The high A.C. voltage developed across T1's secondary is rectified by semiconductor diode SE1 and filtered by capacitor C1; R3 serves as a steady output load. Operating power is furnished by a single flashlight cell.

In use, the Dosimeter Charger shown handles two jobs. Output jack J1 and control switch SW1 are linked mechanically. When a Dosimeter is inserted in the jack with *light pressure,* initial switch contact turns on the built-in pilot lamp, I1. This provides illumination so that the Dosimeter's charge may be read. Additional pressure on the jack applies the necessary high D.C. voltage to charge the unit. Relatively simple devices, Dosimeter Chargers may be serviced by following the general procedure outlined in the Troubleshooting Chart given in Table 9-Q.

OTHER TRANSISTORIZED EQUIPMENT

The special purpose receivers, radio transmitters, control devices, test instruments, and similar units we have examined thus far in this Section by no means exhausts practical transistor applications. There are many types of equipment which can't be classified conveniently within the groupings used. Then, too, there are other transistor applications which, while numerous, are so simple as not to demand special examination; in this latter class are such units as code practice oscillators, simple tone oscillators and amplifiers in toys, and children's receivers – often, these are little more than a standard crystal receiver and single-stage earphone amplifier. Let's take a look, now, at other types of transistorized equipment which the practical technician may encounter in his work.

TAPE RECORDER. Used by reporters, scientists, military personnel (see Fig. 9-41), detectives, and others, miniature transistorized tape and wire recorders and dictating machines are becoming increasingly popular. The Mohawk *Midgetape* recorder is typical of these compact instruments. This unit's schematic wiring diagram is given in Fig. 9-42. Basically a three-stage audio amplifier with a separate bias-erase oscillator (Q4), this recorder uses *PNP* transistors in the common-emitter configuration. Operating power is supplied by a 10.5 volt battery (B1). The tape drive mechanism is driven by a small PM electric motor, powered by the same battery used to

Fig. 9-41: An Air Force officer using a miniature Tape Recorder.

operate the amplifier-recorder circuit. Electrical noise is reduced to a minimum by shielding the motor assembly and by providing adequate line filters (L1, L2, C15, Fig. 9-42).

Referring to the schematic diagram, the instrument has two modes of operation, as determined by its "RECORD-PLAY" switch, SW3. Operating power is controlled by SW4 and by SW1 when the microphone plug, PL1, is inserted in its jack, J1; a mechanically linked switch, SW2, opens when PL1 is inserted, allowing SW1 to assume power control. When SW3 is in its "PLAY" position, as shown in

Fig. 9-42, signals obtained from the tape pick-up head are coupled through C1 to common-emitter amplifier Q1, with its output, in turn, coupled through C4 and *Gain* control R5 to Q2. This stage provides additional amplification and applies its output signal to final amplifier Q3. Two outputs are available through Q3's output coupling capacitor, C8; one is applied back to J1 through SW3, where it may serve to drive the microphone through impedance matching transformer T1.

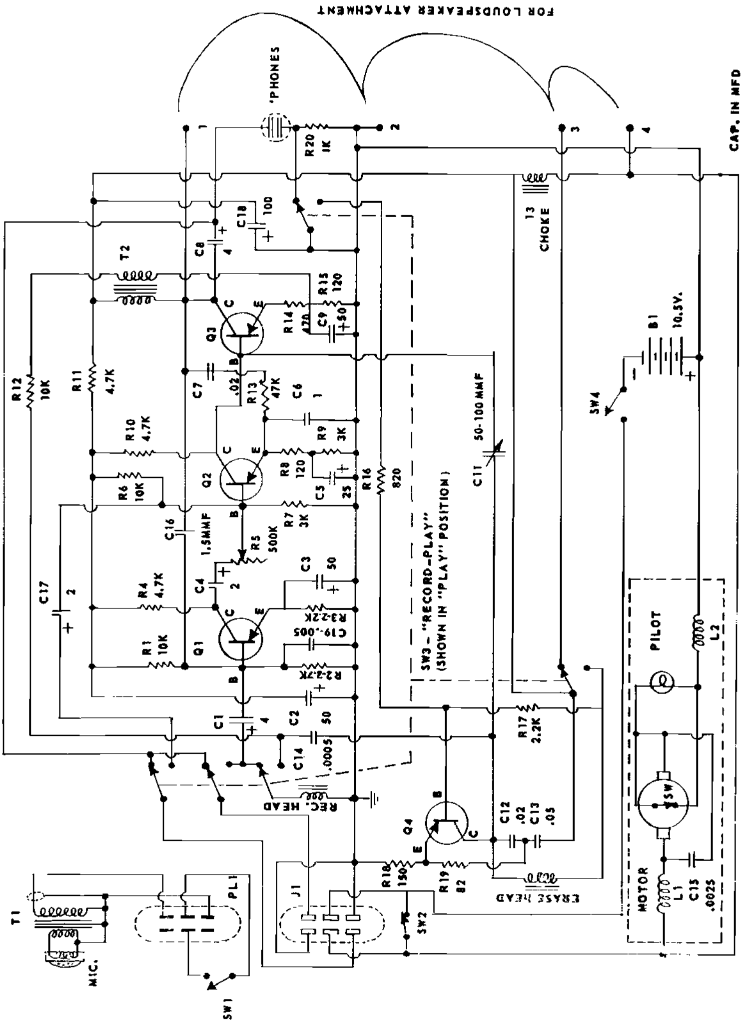

Fig. 9-42: Schematic wiring diagram of the MOHAWK "Midgetape" transistorized Tape Recorder. Four transistors are used in this battery-operated instrument.

This permits the microphone to be used as a sound reproducer if desired. The second output is available through the earphone jack ('PHONES). A four terminal connector is provided for the addition of a booster amplifier stage, if needed, to permit loudspeaker reproduction; Q3's output is also made available to one of the terminals of this connector.

When SW3 is in the "RECORD" position, several circuit changes take place. First, the tape head is switched from Q1's input to receive an amplified signal delivered from the secondary of Q3's output transformer, T2, through R12. A small D.C. signal, obtained from emitter resistor R15, bypassed by C9, is applied to the head at the same time. Second, the microphone's output signal, obtained through PL1 and J1 from T1, is coupled through C1 to the three-stage audio amplifier's input. Finally, bias-erase oscillator Q4 is switched on; this stage is wired as a common-emitter Colpitts oscillator, with its tuned circuit made up of the inductive erase head and C12 and C13 in series. C12 serves to control the bias signal voltage applied to Q3.

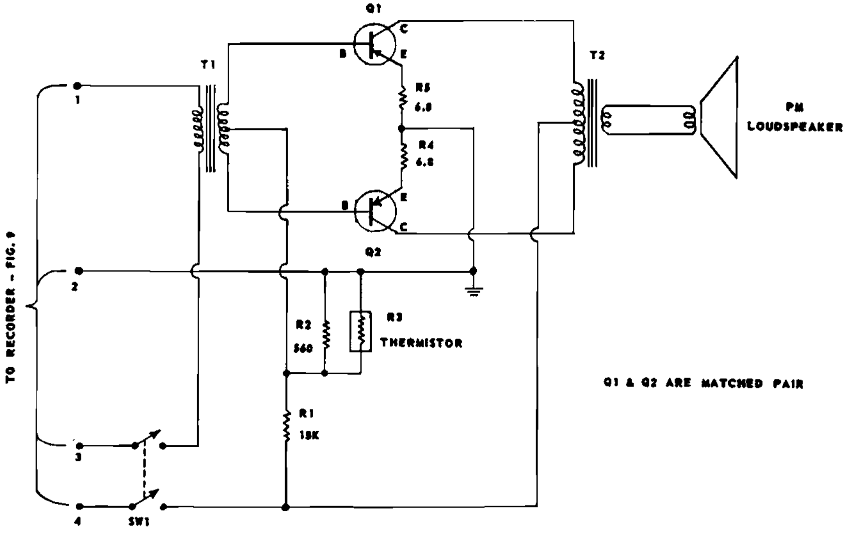

Fig. 9-43: "Booster" (loudspeaker) amplifier circuit. This assembly is designed as an accessory for use with the basic Tape Recorder shown in Fig. 9-42 and provides loudspeaker (instead of earphone) output. Troubleshooting procedure is as for any standard audio amplifier. Refer to Section 3 for procedures and Troubleshooting Tables.

With limited output power, the instrument is designed primarily for earphone operation. Where loudspeaker reproduction is needed, a separate booster amplifier-loudspeaker assembly is available and may be connected to the basic tape recorder. This unit's schematic

CHECK FOR → COMPLAINT ↓	Weak batteries	Defective Mic.	Defective 'phones	Open filter C2, C18	Open filter C15	Open coupling cap. C1, C4, C8	Leaky filter C2, C18	Shorted choke, L3	Open choke, L3	Shorted motor choke L1, L2	Open emitter by-pass C3, C5, C9	Incorrect bias ad . C11	Noisy control R5	Defective shielding	Poor lead dress	Leaky transistor Q1, Q2, Q3, Q4	Weak transistor Q4	Weak transistor Q1, Q2, Q3	NOTES
Dead	*	●	●				●		●										
Weak	*					●	●				●							●	
Noise (hash)				●	*			●		●				●	●				
Noise as volume changed													*						
Oscillation, squealing				●										●	*				
Sound garbled	*	●	●				●					●				●	●	●	
Weak and distorted	*	●	●			●	●					*				●	●	●	
Doesn't erase												*					●		
Short battery life							*									●			

TABLE 9-R: TAPE RECORDER TROUBLESHOOTING CHART. Component numbers listed refer to Fig. 9-42, but this Chart may be used as a general guide for servicing any transistorized tape recorder. For Mechanical Troubles, refer to Table 9-S.

PROBABLE DEFECT → COMPLAINT ↓	Switch contacts misadjusted	Defective batteries	Dirt on belt and pulley grooves	Defective cartridge	Dirty record head	Record head misaligned	Rewind housing binding	Float pin stuck	Latching cam tab bent	Dirty pinch roller or capstan	Idler cone misadjusted	Governor misadjusted	Dirty contacts (Governor)	NOTES
Machine won't shut off	●													
Machine won't start		●												
Tape spools too slowly			*	●										
Fluctuating playback					*									
Crosstalk on playback						*								
Doesn't rewind smoothly (cartridge out)							●							
Will not rewind								●						
"ON-OFF" Mechanism binds									●					
Faltering recordings (tape slippage)										*				
Excessive mechanical noise											●			
Tape speed off												*		
Tape speed not constant													*	

TABLE 9-S: TAPE RECORDER TROUBLESHOOTING CHART — MECHANICAL DEFECTS. This Chart refers specifically to the instrument shown in Fig. 9-42 but, of course, may be used as a general guide.

wiring diagram is given in Fig. 9-43. Here, two *PNP* transistors are used as a transformer-coupled Class B push-pull amplifier to drive a PM loudspeaker; the common-emitter configuration is employed. The booster amplifier's operating power is obtained from the tape recorder's power supply circuit (B1, Fig. 9-42).

As a general rule, the electronic circuits employed in miniature tape and wire recorders or dictating machines may be serviced using the basic test techniques applied to standard audio amplifiers, as outlined in Sections 2 and 3. The Troubleshooting Charts given in these sections also may be applied to this type of equipment. The essential difference between tape recorder circuits and standard audio amplifiers . . . except for the use of magnetic pick-up and playback heads . . . is the bias-erase oscillator (Q4, Fig. 9-42). This is simply a high-frequency audio oscillator supplying a small "bias" signal for recording and applying a strong A.C. signal to the unit's *erase* head to wipe out previously recorded material. Its operation may be checked with an A.C. Voltmeter or Oscilloscope. A general Troubleshooting Chart listing various service complaints caused by electronic circuit defects is given in Table 9-R. In practice, however, the majority of service complaints encountered with this general type of equipment are the result of mechanical malfunctioning rather than circuit troubles (aside from defective batteries, of course). Here, it is necessary to follow each manufacturer's specific recommendations due to the wide variations in mechanical designs. A Troubleshooting Chart for mechanical defects in the *Midgetape* recorder is given in Table 9-S.

LIGHT FLASHER. A unique application of the transistor is represented by the instrument shown in Fig. 9-44. Here, a transistorized circuit is used to flash a standard incandescent lamp at periodic intervals. Light flashers have been used for years, but prior to the introduction of the transistor were generally operated by thermoelectric switches. The use of transistors in such equipment permits brighter, sharper light pulses; this, plus the fact that the transistors themselves require less power for operation, means greatly reduced overall power requirements with no loss of operating characteristics . . . an important factor since most of these units must be operated from self-contained batteries, with maximum battery life an essential design requirement. Light flashers are used extensively by construction firms, highway maintenance groups, police and fire departments, and truckers.

Typical light flasher circuits are shown schematically in Fig. 9-45. In both of these *NPN* and *PNP* transistors are used as direct-coupled complementary multivibrators, with the filament of an incandescent lamp serving as the output load. Flashing rate is determined by the R-C time constant of the feedback circuit. Light flasher

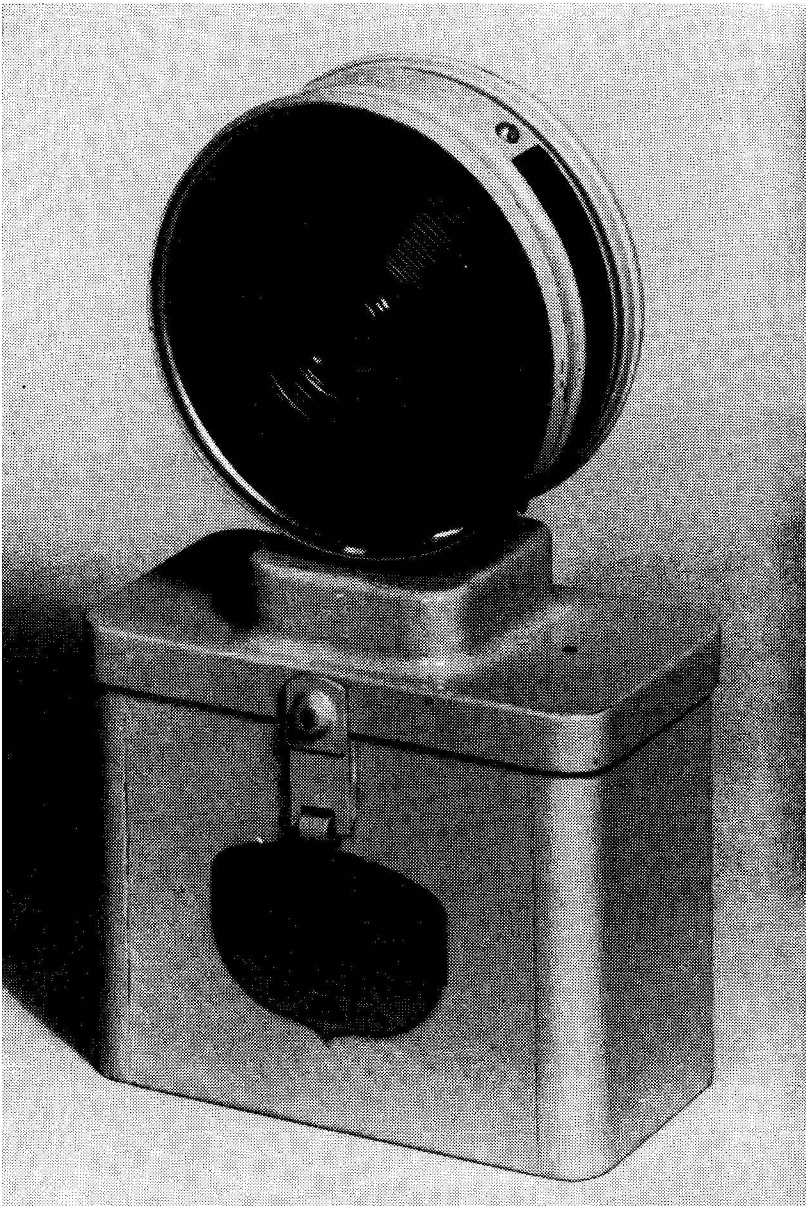

Fig. 9-44: DIETZ transistorized light flasher. Such instruments are used extensively in military, commercial and industrial applications as warning lights.

servicing data is given in the Troubleshooting Chart outlined in Table 9-T. The majority of service complaints encountered is this type of equipment are the result of defective batteries or burnt-out lamp bulbs.

PHOTOFLASH. The electronic photoflash or "strobe-light" has become a standard photographic accessory, and is used extensively by both amateur and professional photographers. These units may be designed for power-line or battery operation, with battery power essential for field work. Since a strobe tube requires relatively high D.C. voltages for operation, some method must be used to obtain this voltage. In the past, two basic methods were employed in battery operated equipment . . . (a) the use of heavy and expensive high-voltage dry batteries, and (b) the use of standard low-voltage batteries, plus a vibrator-type power pack. Both of these techniques result in expensive and relatively inefficient units. As we have seen, the transistor may be used in efficient high-voltage power supply designs; it is not surprising, then, to find that transistorized photoflash equipment is being introduced by most photographic equipment manufacturers. A typical circuit arrangement is shown schematically in Fig. 9-46.

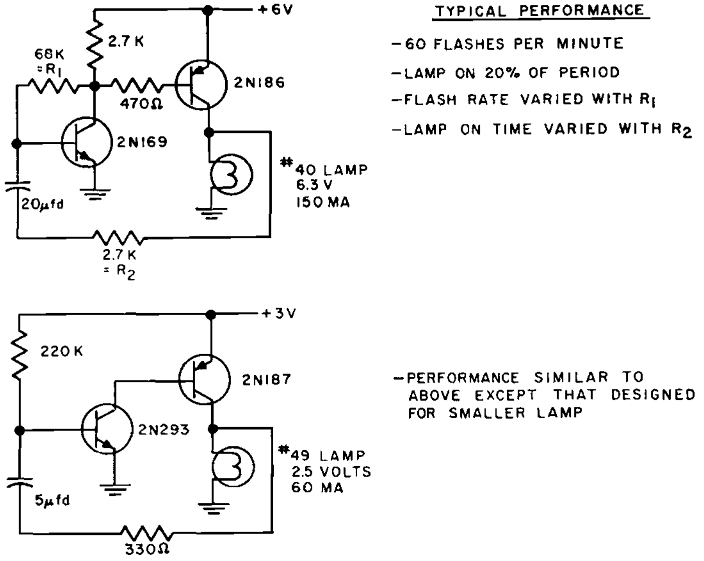

Fig. 9-45: Typical light flasher circuits. In each case, two transistors are used as a modified collector-coupled multivibrator.

An examination of Fig. 9-46 reveals that the complete equipment is made up of two relatively independent assemblies, a transistorized

CHECK FOR → COMPLAINT ↓	Defective battery	Burnt out bulb	Leaky transistor	Open transistor	Leaky capacitor	Changed value capacitor	Defective switch	NOTES
Lamp doesn't light	*	*		●			●	
Lamp glows continuously			●		●			
Flashes too rapidly			●		●	*		
Flashes too slowly			●		●	*		
Lamp is dim	*							

TABLE 9-T: LIGHT FLASHER TROUBLESHOOTING CHART. Use this as a guide when servicing transistorized Light Flashers. In most cases, you'll find that trouble is caused either by a weak battery or a defective lamp bulb.

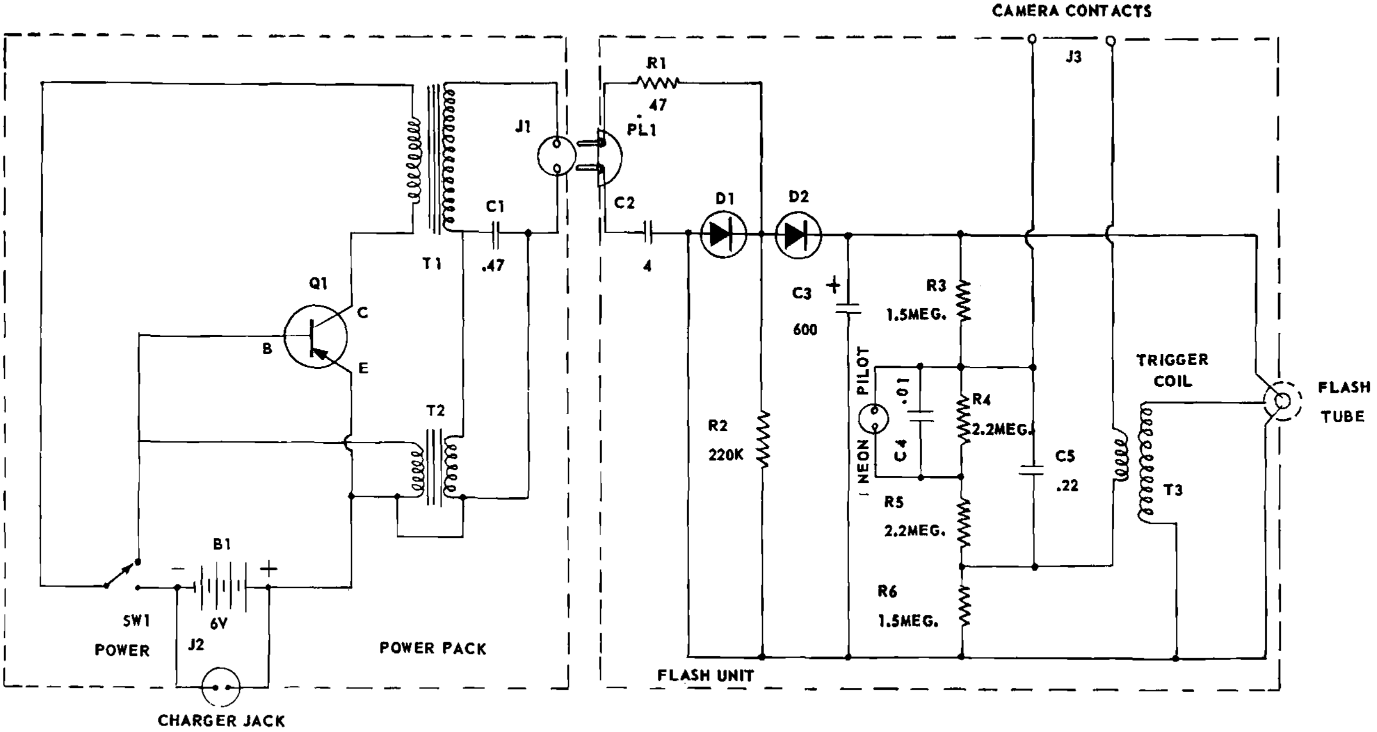

Fig. 9-46: Schematic diagram of a transistorized electronic flash unit designed for use with cameras.

Power Pack and a conventional *Flash Unit.* Operated by a 6-volt rechargeable battery, B1, the Power Pack employs a *PNP* power transistor (Q1) as a common-emitter oscillator, with its output A.C. signal stepped up by transformer T1. A separate transformer, T2, furnishes the feedback necessary to start and sustain oscillation.

The operation of the Flash Unit is standard and follows conventional practice. The A.C. voltage obtained from the Power Pack through J1 and PL1 is applied to a half-wave voltage-doubler rectifier (D1, D2) through R1 and C2. The voltage-doubler charges a large output capacitor, C3, which, in turn, serves to furnish operating power. Resistive voltage-divider R3-R4-R5-R6, across C3, serves to indicate when C3 is charged and ready for use and also furnishes a small voltage to triggering capacitor C5. C4 is charged slowly by the voltage developed across R4, reaching its full charge and firing the neon bulb used as a *Ready* light only when C3 reaches its normal charge. At the same time, C5 is charged through R3 and R6. Once C3 is fully charged, the neon lamp lights, and the unit is ready for use. The camera's synchronized shutter contacts, connected to J3, serve to apply C5's voltage across the primary winding of trigger coil T3; C5, discharging through this coil, develops a high voltage across T3's secondary by an inductive kick. This voltage, applied to the flashtube's trigger electrode, fires the tube, permitting C3's stored energy to be discharged, and producing the desired flash. Afterwards, C3 is recharged again for the next operating cycle.

In servicing this type of equipment, one of the first moves is to isolate the trouble to either the Power Pack or the Flash Unit. Once this has been done, defect isolation is generally a routine chore. Basic maintenance procedure is outlined in the Troubleshooting Chart given in Table 9-U. While referring to the schematic diagram given in Fig. 9-46, this Chart may be applied, with but little modification, to all standard photoflash designs. Perhaps the chief circuit variation encountered in practice is the use of a push-pull oscillator employing two transistors in place of the single-ended circuit shown in Fig. 9-46. Here, the basic circuit arrangements are very similar to those used in standard transistor Power Supplies (see Figs. 9-18 and 9-20).

SERVO SYSTEMS. A servo system is basically an electro-mechanical installation designed to accomplish a specific control job automatically. This is done by developing an output signal which is fed back to the installation's input and compared with a reference signal indicating the job to be done. The difference between the two signals represents an *error signal* and this, in turn, is amplified and used as a control over the installation. The system automatically operates until the error signal is reduced to zero. Servo systems are used extensively in military devices and in various industrial and com-

STEP	MAINTENANCE PROCEDURE
1	Preliminary Check – Turn unit on. See if "Ready" light glows after short while. (a) If "Ready" light glows, go to Step 2. (b) If "Ready" light fails to glow, go to Step 3.
2	Check Flash Unit Operation – When "Ready" light glows, try to flash unit by momentarily shorting contacts J3 with short wire or screwdriver (don't touch bare wire with fingers). (a) If unit flashes properly, defect is in camera shutter or in connecting cable. Check connecting cable for continuity and shorts. If defective, replace. (b) If unit fails to flash, open case and look for visual defects. If all appears in order (no broken leads, opens, shorts), either C5, Trigger Coil (T3), or Flash Tube is defective. Try substitute C5, check Trigger coil for continuity. If these components O.K., replace Flash Tube.
3	Check Battery – (B1, Fig. 9-46) – Measure across charger jack (J2) terminals with power "OFF," then with power "ON" (SW1 closed). If battery voltage drops below 5.0 volts when unit is "ON," replace or recharge battery. If unit still inoperative, go to Step 4.
4	Isolate trouble to Power Pack or Flash Unit – Separate two units. Using AC Voltmeter, check for high A.C. voltage at output jack (J1). Jack should be terminated with dummy load (see text). (a) If no voltage is present here, or very low voltage, trouble is in Power Pack. Go to Step 5. (b) If ample voltage present (value will vary with different models), trouble is in Flash Unit. Go to Step 6.
5	Check Power Pack – Open case and look for obvious defects...broken leads, shorts, etc. Correct. Check T1, T2 for continuity and possible shorts; check C1 for open or leakage. If these parts check O.K., and switch (SW1) operates properly, replace transistor.
6	Check Flash Unit – Open case and look for obvious defects. Correct. Reconnect Power Pack and turn "ON." Using D.C. Voltmeter on high range (1,000 volts or more), check for high D.C. voltage across C3. (a) If D.C. voltage is present, check R3, R4, R5, R6 for continuity (power "OFF," C3 discharged). Check C4, C5 for leakage and possible open (by substitution). Check Trigger Coil (T3) for continuity and shorts. Replace any defective parts. If unit still inoperative, replace Flash Tube. (b) If no D.C. voltage present (or very low voltage), turn power "OFF" and check C3 for leakage or open, R1 and R2 for open, C2 for leakage or open. Replace any defective parts. If unit still inoperative, replace rectifiers (D1, D2).

TABLE 9-U: TRANSISTORIZED PHOTOFLASH MAINTENANCE CHART. While applying specifically to the circuit shown in Fig. 9-46, the procedure outlined may be used with any transistorized flash unit.

mercial installations. One or two practical examples will illustrate how these systems are employed.

One common application of a servo system is found in ocean-going ships. Here, a gyro-compass may be used as an automatic pilot to keep the ship on course. For example, let us assume that the ship's course is set by the Captain as NNE. The gyro-compass is set for this heading. An electrical sensing system or simple generator is set up to indicate the difference between the gyro-compass setting and the axis of the ship. This difference, constituting an error signal, is then amplified and fed to electric motors controlling the ship's rudder. As long as the error signal is zero, indicating that the ship is pointed in the same direction to which the gyro-compass is set, the

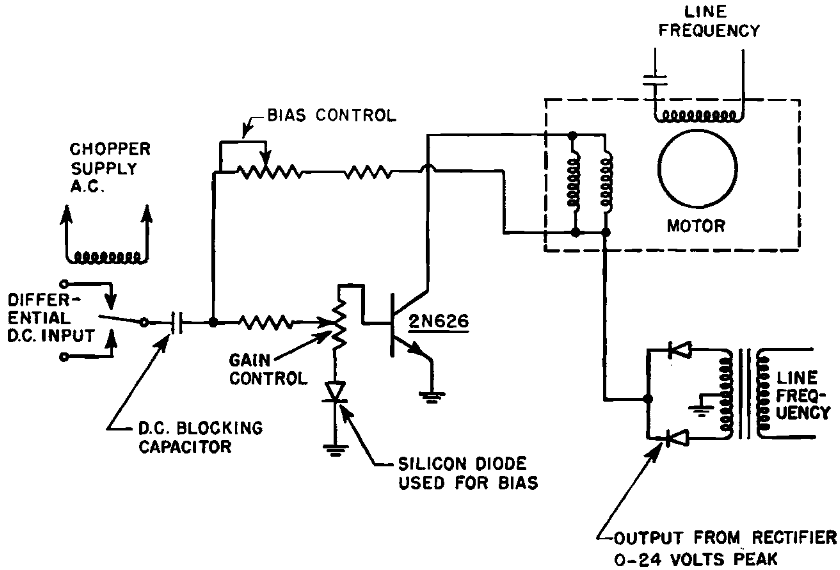

Fig. 9-47: Schematic of a transistorized servo amplifier. Servo systems are used extensively in military and industrial applications.

system remains inactive. If winds or currents start to shift the ship's heading, an error signal is developed proportional to the difference between the ship's actual direction and the fixed gyro-compass setting. This signal, in turn, is amplified and applied to rudder motors, moving the rudder and turning the ship back on course. As the ship moves into the desired heading, the error signal becomes less and less, reaching zero again when the ship's direction and the present gyro-compass heading are the same. A feedback signal may be developed by the rudder system and compared with the heading error signal at the same time, with the difference used to as a secondary control to avoid "over-correction" and a tendency for the ship to "hunt" back and forth on either side of the gyro-compass heading.

A further example may be found in automatic fire-control systems used in military artillery installations. Here, a reference signal may be obtained from an electronic trajectory computer which, in turn, obtains part of its information from a target tracking radar unit. Potentiometers or electromechanical generators attached to the gun's elevation and azimuth controls indicate the barrel's actual direction or aim. These two signals . . . one obtained from the computer to indicate desired "aim," and the other from the gun indicating actual "aim" . . . are compared, with the error signal used to control elevation and azimuth positioning motors, automatically swinging the gun's barrel to the desired position. If the target is a moving one, such as an airplane or tank, a continuous control may be used, with data obtained from the tracking radar fed to the computer and its output, in turn, constantly shifting the gun, keeping it "on target" until fired.

STEP	TEST PROCEDURE	REMARKS
1	a. Check system's overall operation. b. Check adjustments, controls. c. Check interconnecting cables.	a. See if trouble is only in one section. b. Make sure these are normal. c. Look for opens, shorts, poor contacts.
2	a. Check Power Supply. b. Check input signal to Servo Amp. c. Check output signal from Servo Amplifier.	a. Check D.C. voltages under load. b. If weak or not present, check signal source. c. If not normal, troubleshoot as audio amplifier, following techniques outlined in Section 3.
3	a. Check motor continuity.	a. Repair or replace defective motor.

TABLE 9-V: SERVO SYSTEM TROUBLESHOOTING CHART. The majority of servo amplifiers use circuitry similar or identical to that employed in high power audio amplifiers and may be serviced using the techniques and Charts given in Section 3.

Perhaps a major portion of most servo systems are electro-mechanical or standard electrical devices such as motors, solenoids, potentiometers, reference generators, and so on. However, transistorized electronic circuits are used in the control amplifiers and, sometimes, in the feedback systems. As a general rule, these amplifiers employ circuits very similar to those found in conventional audio amplifiers, as discussed in detail in Section 3, although special circuits may be found in a few installations. A typical special circuit is shown schematically in Fig. 9-47; here, the differential D.C. input signal is essentially the *error signal* mentioned above. The transistor shown is a composite unit serving as a single-ended common-emitter power amplifier, with its output fed to control windings on the servo motor. D.C. operating power is obtained through a conventional full-wave rectifier.

To service a servo system, the technician must, of course, be familiar with its overall operation and intended function. The first step, then, is to check out the system's overall operation and to isolate the trouble to a specific section. Basic procedure is outlined in the Troubleshooting Chart given in Table 9-V. If the trouble is found to be in the transistorized amplifier, this may be checked further using the Troubleshooting Charts given in Section 3.

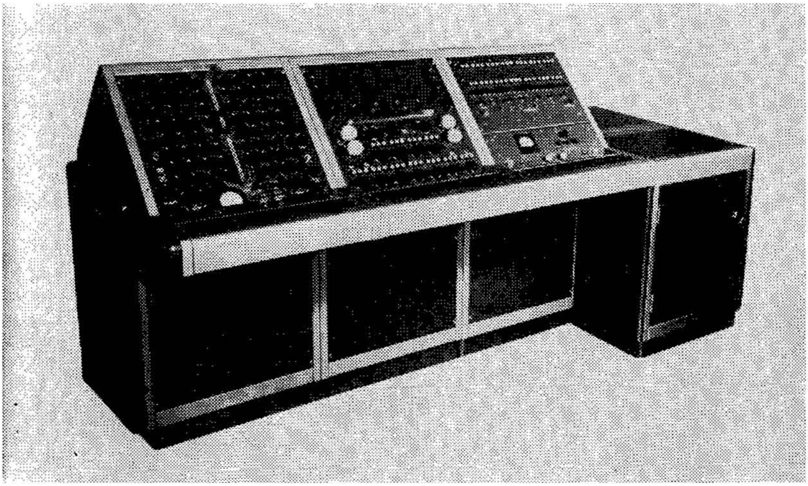

Fig. 9-48: The PHILCO Model C-1102 "Transac" transistorized computer assembled in a multi-section console together with basic laboratory test equipment.

COMPUTERS. Electronic computers are much more than simply oversized "calculating" machines. These units incorporate *memory* banks which can store basic data for long periods, or interim data developed during a computational procedure for short periods for later use. Found in business offices as well as in research laboratories and government installations, electronic computers are being used for literally thousands of different jobs. Many of these instruments have various *logic* circuits which permit a comparison of different factors affecting the outcome of a problem, and of *making a decision* which will result in the most desirable solution, automatically shifting their operation to take the decision into account. Obviously, then, the overall circuits used are extremely complex. For example, the electronic computer shown in Fig. 9-48, a relatively small machine in comparison to some, uses 2,800 transistors, 1,700 resistors and 250 capacitors. Some computers use tens of thousands of components and a simple part-by-part listing alone would require a book larger than this one. Frequently, this circuit complexity is the result of the multiplication of relatively few *basic* circuit arrangements. A simple single-stage amplifier or switching circuit, for example, might be repeated hundreds of times in various sections of the instrument. Multivibrator, flip-flop, and switching circuits are the basic arrangements used most commonly in computer designs. A number of these basic circuits are shown for reference purposes in Figs. 9-49 through 9-52.

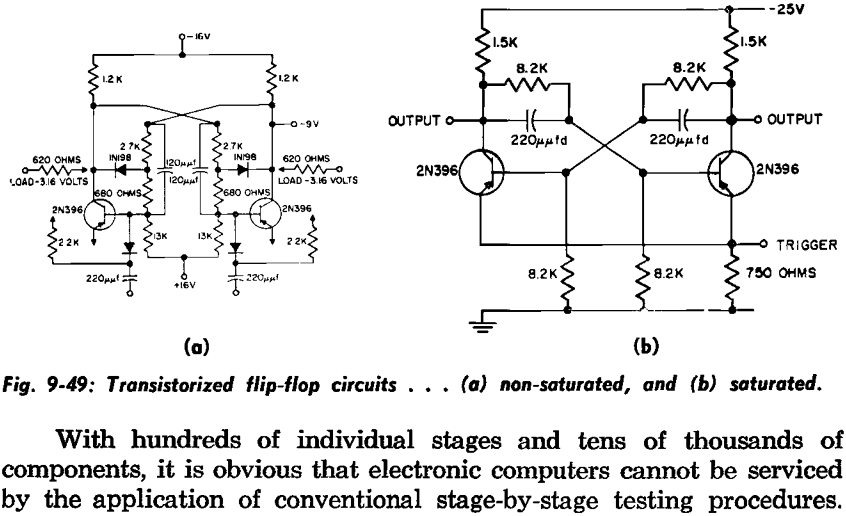

(a) (b)

Fig. 9-49: Transistorized flip-flop circuits . . . (a) non-saturated, and (b) saturated.

With hundreds of individual stages and tens of thousands of components, it is obvious that electronic computers cannot be serviced by the application of conventional stage-by-stage testing procedures. Fortunately, most computers are capable of isolating their own defects to specific sections and stages. This is accomplished by processing through a *Test Program;* in essence, this is a specific computational problem designed to bring various stages into operation. The results obtained will indicate approximately *where* a defect is located by the nature of its deviation from a "normal" answer. Afterwards, additional Test Programs may be processed through the computer to further isolate the defect to a specific section and stage. These later test problems will generally differ from those used for initial isolation. The number of test problems which must be processed through the machine, as well as the nature of each, will depend on the type of

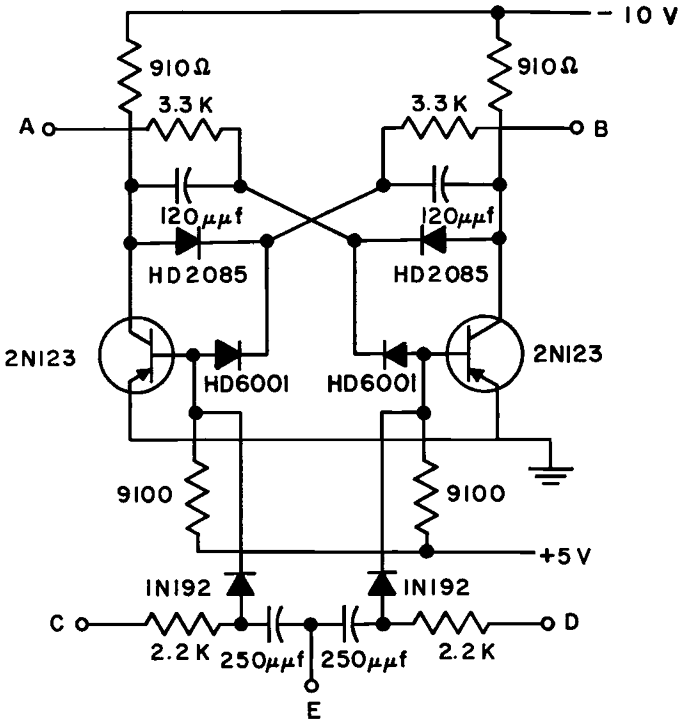

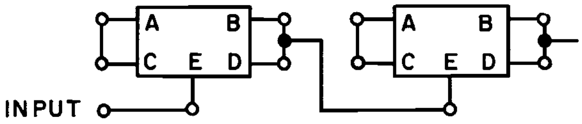

INTER CONNECTION AS COUNTER

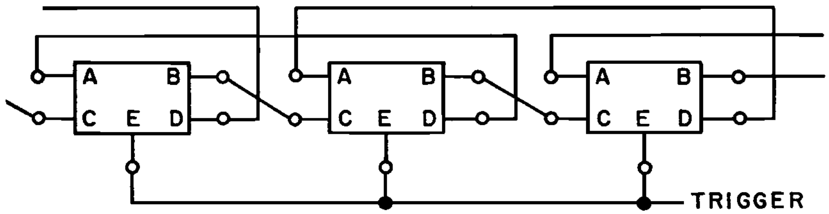

INTERCONNECTION AS SHIFT REGISTER

Fig. 9-50: A basic flip-flop circuit which may be interconnected for use in a variety of computer applications. Several such circuits may be used as COUNTERS or as SHIFT REGISTERS.

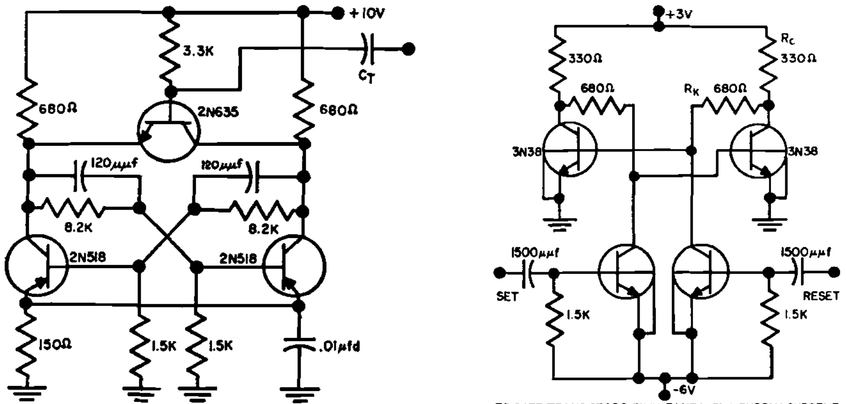

SYMMETRICAL TRANSISTOR TRIGGERS BOTH SIDES OF FLIP-FLOP SIMULTANEOUSLY.

TRIGGER TRANSISTORS SIMULTANEOUSLY SUPPLY CURRENT TO TURN OFF ONE SIDE OF FLIP-FLOP AND TO DEVELOP A VOLTAGE ACROSS THE COLLECTOR LOAD ON THE OTHER SIDE.

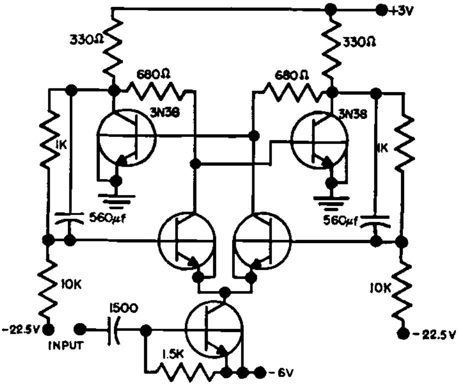

USING TRIGGER POWER TO INCREASE SWITCHING SPEED

Fig. 9-51: A variety of flip-flop triggering techniques.

computer, nature of the defect, and other factors varying widely from one instrument to another. Since a computer represents a tremendously large investment, "down" time while being serviced must be kept to an absolute minimum. To accomplish this, most of a computer's individual stages or sections are designed for easy removal and replacement, and spare units are kept available. Thus, once a defect has been isolated to a specific section, that section is simply "yanked" and a spare installed in its place. The defective section is then serviced using conventional test techniques at time permits. Once repaired. the defective section becomes a "spare" for future work.

The basic troubleshooting and repair procedure described above is outlined as a step-by-step technique in the Troubleshooting Chart given in Table 9-W. This may be used as a general guide when servicing electronic computers. However, the computer manufacturer's specific service suggestions should be followed wherever possible, taking precedence over the outline given in Table 9-W.

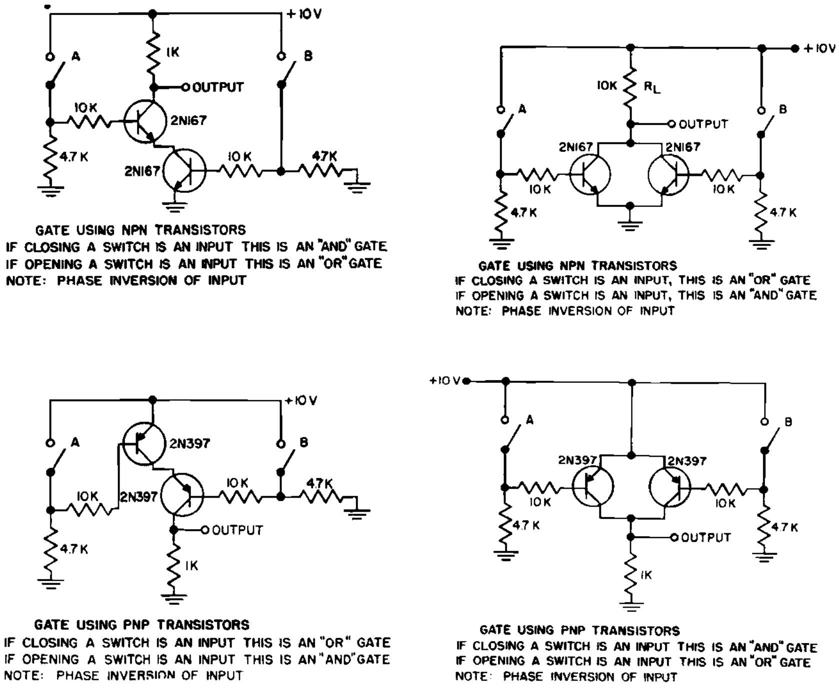

GATE USING NPN TRANSISTORS
IF CLOSING A SWITCH IS AN INPUT THIS IS AN "AND" GATE
IF OPENING A SWITCH IS AN INPUT THIS IS AN "OR" GATE
NOTE: PHASE INVERSION OF INPUT

GATE USING NPN TRANSISTORS
IF CLOSING A SWITCH IS AN INPUT, THIS IS AN "OR" GATE
IF OPENING A SWITCH IS AN INPUT, THIS IS AN "AND" GATE
NOTE: PHASE INVERSION OF INPUT

GATE USING PNP TRANSISTORS
IF CLOSING A SWITCH IS AN INPUT THIS IS AN "OR" GATE
IF OPENING A SWITCH IS AN INPUT THIS IS AN "AND" GATE
NOTE: PHASE INVERSION OF INPUT

GATE USING PNP TRANSISTORS
IF CLOSING A SWITCH IS AN INPUT THIS IS AN "AND" GATE
IF OPENING A SWITCH IS AN INPUT THIS IS AN "OR" GATE
NOTE: PHASE INVERSION OF INPUT

(a) (b)

Fig. 9-52: Basic transistorized logic circuits using series transistors (a) and parallel transistors (b).

MILITARY EQUIPMENT. Another area in which transistors are being used in ever-increasing quantities is in the design and construction of military electronic equipment. Often, such equipment employs circuits quite similar to those found in the commercial equipment discussed in this and earlier Sections. Thus, basic audio amplifier, receiver, and power supply circuits will be found in many units. Generally, the chief difference between military equipment and commercial devices using similar circuits is in actual physical construction and in minor circuit modifications to insure better stability with power source, temperature, and humidity variations. As a general rule, military electronic equipment is ruggedly built and must meet rigorous performance specifications. Where the circuits used are similar to those described elsewhere in this volume, similar test techniques may be employed and, in most cases, corresponding Troubleshooting Charts may be used.

STEP	TEST PROCEDURE	REMARKS
1	Set up standard Test Program and process through Computer. Check results.	Program used will vary with make and model. This will permit preliminary isolation or trouble.
2	After preliminary isolation, process second Test Program as indicated by results of Step 1.	This will generally isolate trouble to a specific stage or plug-in assembly.
3	Pull defective assembly.	Replace with spare unit.
4	Bench-test defective assembly and repair.	Use conventional troubleshooting techniques outlined in Section 1 or special tests recommended by computer manufacturer. If defective assembly is an amplifier, use procedures discussed in Sections 2 and 3.
5	Return repaired assembly to "Spares" storage.	

TABLE 9-W: COMPUTER TROUBLESHOOTING CHART. In most cases, troubles in computers can be isolated to specific sections . . . or stages . . . by processing through a selected program. Once the defective section is isolated, it is generally removed from the computer and serviced on the bench. A spare section is installed to minimize computer "down time."

On the other hand, transistors are also used extensively in highly classified types of military equipment. Here, circuit information is not available for general distribution, and, of course, troubleshooting and test procedures cannot be offered. Military service technicians assigned to the maintenance of such equipment are generally given special training to familiarize them with the units. Some of the classified military equipments in which transistors are found are as follows . . . Mine Detectors, Radar Equipment, Sonar Gear, Mine Detonators, Guided Missile Control Devices, Telemetry Equipment, Military Vehicle Control Units, Aircraft Control Instruments, Proximity Fuzes, Fire-Control Instruments and Computers, Surveillance TV Systems, Espionage and Counter-Espionage Equipment; Technical Security Protection Devices, Communications Coding and De-Coding Equipment, Radio Communication Gear, Teletypewriter Apparatus, and so on.

Section 10

USEFUL REFERENCE DATA

IN HIS DAILY WORK, the practical service technician often finds it necessary to refer to detailed information on such topics as tube pin connections and maximum ratings, component specifications, color coding, and so on. Over a period of time, he will acquire a small shop "library" containing the basic reference data needed. This may include such items as a Tube Manual, Battery Specification Chart, Transformer Interchangeability Tables, and "Factory Duplicate" Component Replacement Manuals. In the typical shop, almost all of this material refers specifically to items used in tube-operated electronic equipment. As he undertakes more and more transistor work, however, the technician soon feels the need for similar reference data applying to transistor components and transistorized equipment. To help fill this need, then, useful reference data has been abstracted from various sources and gathered in this Section. In addition, a number of specialized, but practical, techniques have been described. These are needed from time to time in test and maintenance work, and, while some may be familiar to more experienced workers, all are useful to a serviceman's technical "know-how" and are of value in troubleshooting and repairing equipment faster, better, and more efficiently.

To aid in the classification . . . and location . . . of specific topics, this Section has been divided into four major sub-sections, as follows: **TRANSISTORS, COMPONENTS, WAVEFORM ANALYSIS,** and **REPAIR METHODS.** Of necessity, and in order to present the material in as easy-to-use form as possible, text has been cut to a minimum, with the major portion of the data presented in the form of Tables, Diagrams, and photographs. To make the most efficient use of the data given, the reader will find it worthwhile to glance quickly through this entire Section page-by-page, pausing to read only those topics of major or immediate interest. By doing this, he will familiarize

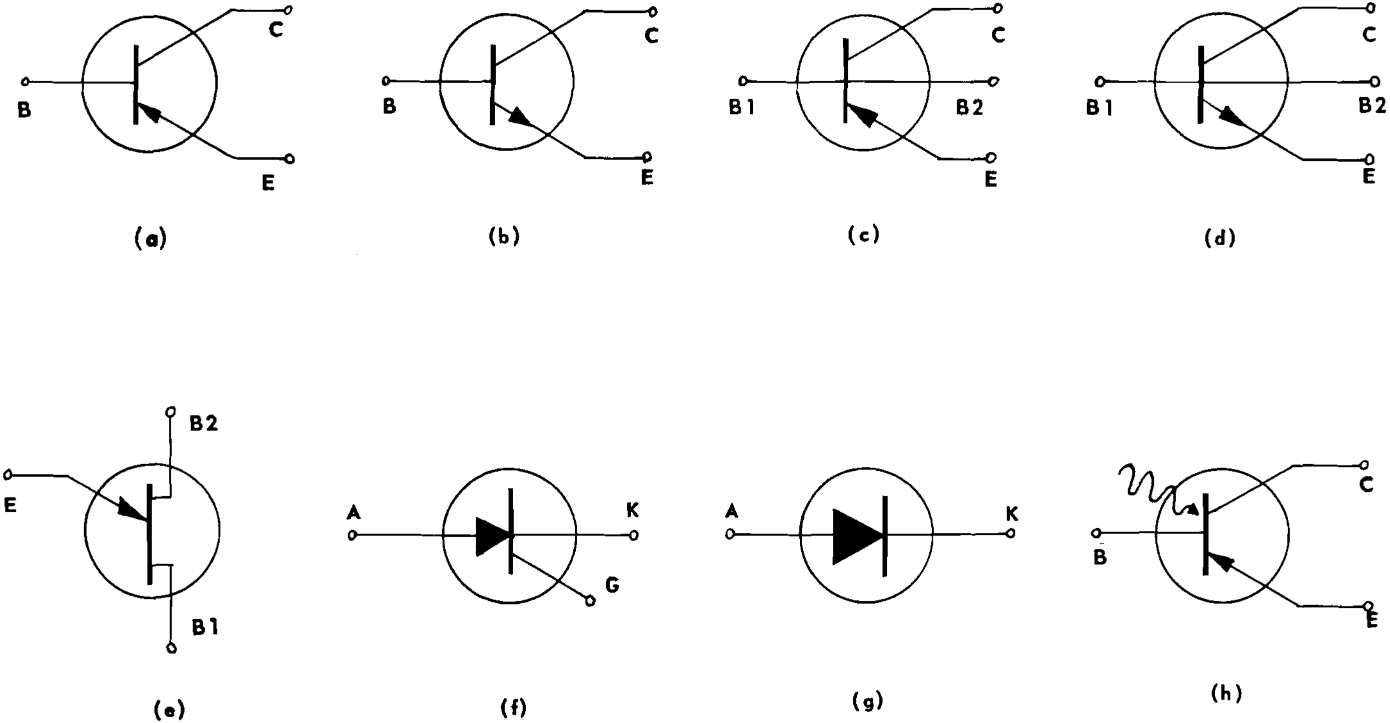

Fig. 10-1: Basic semiconductor symbols . . . (a) PNP transistor, (b) NPN transistor, (c) PNP tetrode, (d) NPN tetrode, (e) Unijunction transistor, (f) Controlled rectifier, (g) Diode, (h) Phototransistor.

himself with what is available and its method of presentation, and, in the future, can turn directly to the data needed for specific jobs.

TRANSISTORS

Vacuum tubes, resistors, capacitors, semiconductor devices, and other electrical parts are identified in diagrams with specific schematic symbols. These give an electrical rather than physical "picture" of the component. The average service technician should be quite familiar with the symbols used to represent *PNP* and *NPN* transistors and semiconductor (crystal) diodes. However, these symbols are repeated in Fig. 10-1 for general reference, along with the symbols used for less frequently encountered devices, such as tetrode transistors (c), (d), the Unijunction transistor (e), the Controlled-Rectifier (f), and the phototransistor (h). A few manufacturers use slightly modified forms of these symbols in their diagrams. To avoid errors, the practical technician should learn to recognize the component regardless of the exact form in which its symbol is presented.

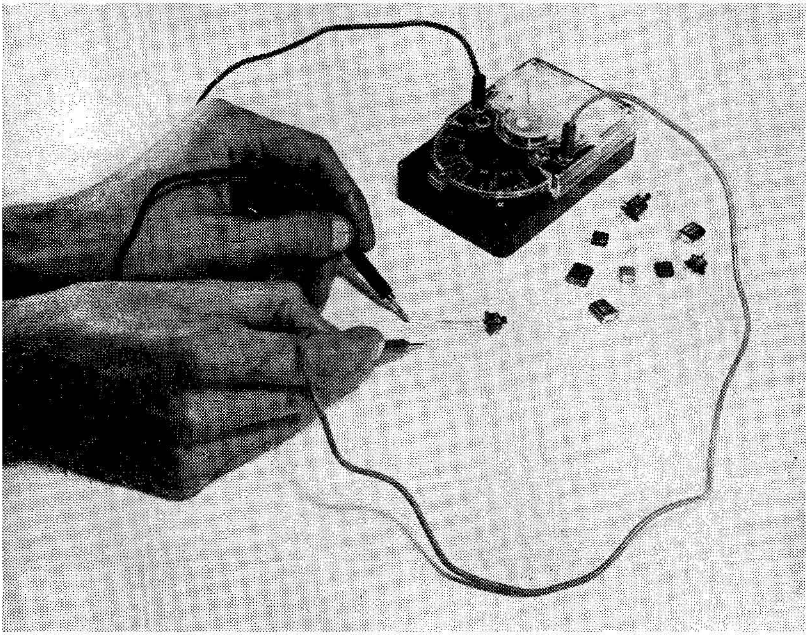

Fig. 10-2: Using an Ohmmeter to check low-power transistors.

Perhaps the most common modification is the omission of the "circle" enclosing the component; the explanation for this approach, generally, is that the circle is omitted because the transistor is not contained "within a vacuum" as are tubes. Another modification is the use of a double-thickness line for the base element, one white, one black. In practice, the long line representing a transistor's base may be aligned either *vertically* (as in Fig. 10-1) or *horizontally,* depending on which is more convenient in a specific diagram.

Referring to Fig. 10-1, the transistor's three electrodes are its base (B), emitter (E), and collector (C); tetrode and Unijunction types have two base connections (B1 *and* B2). The Controlled-Rectifier's elements are its anode (A), cathode (K), and gate (G). Finally, the diode's two electrodes are its anode (A) and cathode (K). In a few instances, the cathode of a diode or rectifier may be identified with the letter "C." Where this is done, care must be taken to distinguish it from a transistor's collector element, which is identified by the same letter designation.

TESTING TRANSISTORS. In order of value, the different methods which can be used to check a suspected transistor are as follows: (a) A Laboratory-type Transistor Analyzer; (b) Substitution; (c) A Service-type Dynamic Tester; (d) A Service-type Static Tester. Refer to Section 1 for details on these instruments. If adequate test equipment or a replacement transistor (for substitution) are not available, the suspected unit can be given a simple qualitative (*Good-Bad*) check using a standard Ohmmeter; this test is illustrated in Figs. 10-2 and 10-3.

The Ohmmeter test method is based on the fact that the transistor, in a sense, may be considered as two semiconductor diodes with a common element. Each "diode," if good, should have different values of resistance depending on the polarity of a D.C. voltage applied to its electrodes. If the unit's "anode" is made *positive* and its "cathode" *negative,* a low *forward* (or *conducting*) resistance is measured; on the other hand, if the "anode" is made *negative* and the "cathode" *positive,* a very high *inverse* (often called *back* or *non-conducting*) resistance value is obtained. Low resistances will be obtained regardless of polarity if the unit is *shorted,* or, if *open,* high resistances in both cases. As a general rule-of-thumb, the greater the ratio between a diode's forward and inverse resistances, the better the unit.

An Ohmmeter, of course, has a built-in D.C. source – its battery. The D.C. polarity applied to a component being checked can be reversed by the simple expedient of interchanging the instrument's test leads. To check a transistor with an Ohmmeter, then, first measure the D.C. resistance between its base and emitter leads (or pins), reversing the Ohmmeter leads to obtain both *forward* and *inverse* emitter junction resistance values. Compare the two readings obtained. You should obtain a high resistance measurement with one connection, a low resistance value with the other, with the ratio between the two at least 25 to 1, but running to over 100 to 1 in good quality units.

Next, repeat the test, but this time measuring the D.C. resistance between the transistor's base and collector leads, thus checking its collector junction. Be sure to reverse the Ohmmeter test leads to obtain both forward and inverse resistances. Again, compare the two readings obtained.

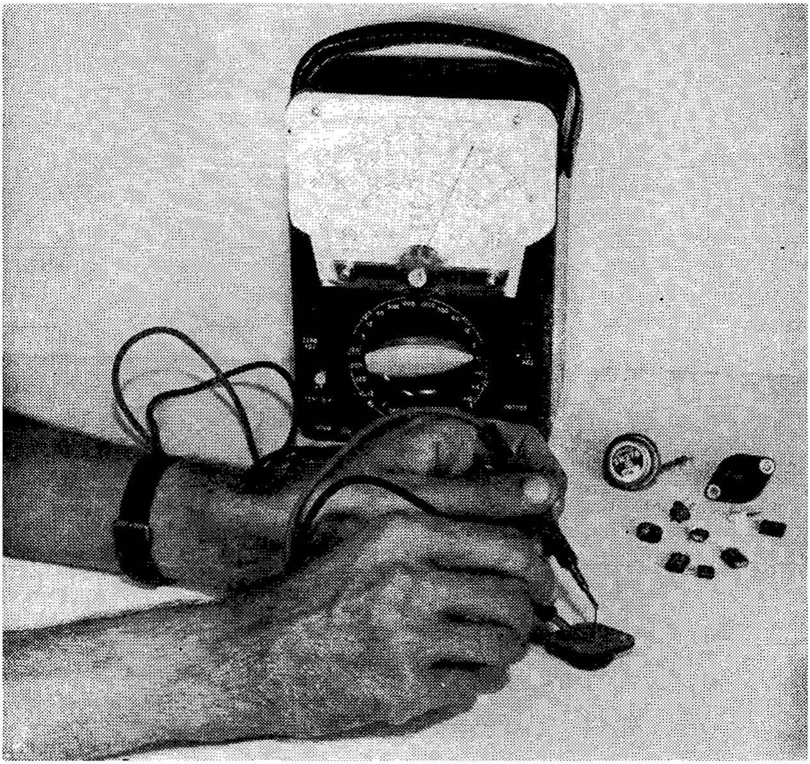

Fig. 10-3: Checking medium and high power (multi-watt) transistors.

Where low-power transistors are checked, the base-emitter or base-collector forward resistances, in general, will be less than 500 ohms, while the inverse resistances may run from 10K to 50K, or more. If the *forward* and *inverse* resistances of either junction (base-emitter or base-collector) are low, the transistor is *shorted* or very "leaky." If both resistances are high, the unit is *open*. If there is no difference between forward and inverse resistance values, whether the actual values are high or low, the junction checked is defective. In either of the three cases, the unit is defective and should be discarded. Be sure to check *both* the base-emitter and base-collector junctions, however, for one may check "good" while the other is either open or shorted. The same technique is used to check power transistors, but the actual resistance values obtained will be much lower than in the case of small units; however, the *ratio* between forward and inverse resistance values of either junction should remain high.

In practice, the resistances measured with specific D.C. polarities applied to the base-emitter or base-collector junctions will depend on whether *PNP* or *NPN* units are checked, although the ratio between forward and inverse resistance should be in the same general range regardless of transistor type. Basic resistance readings for *PNP* and *NPN* low-power transistors and for *PNP* high-power types are diagrammed in Figs. 10-4(a), 10-4(b) and 10-4(c), respectively.

CAUTION: As outlined in Section 1, care must be taken to avoid damage to a transistor when Ohmmeter tests are made. If pos-

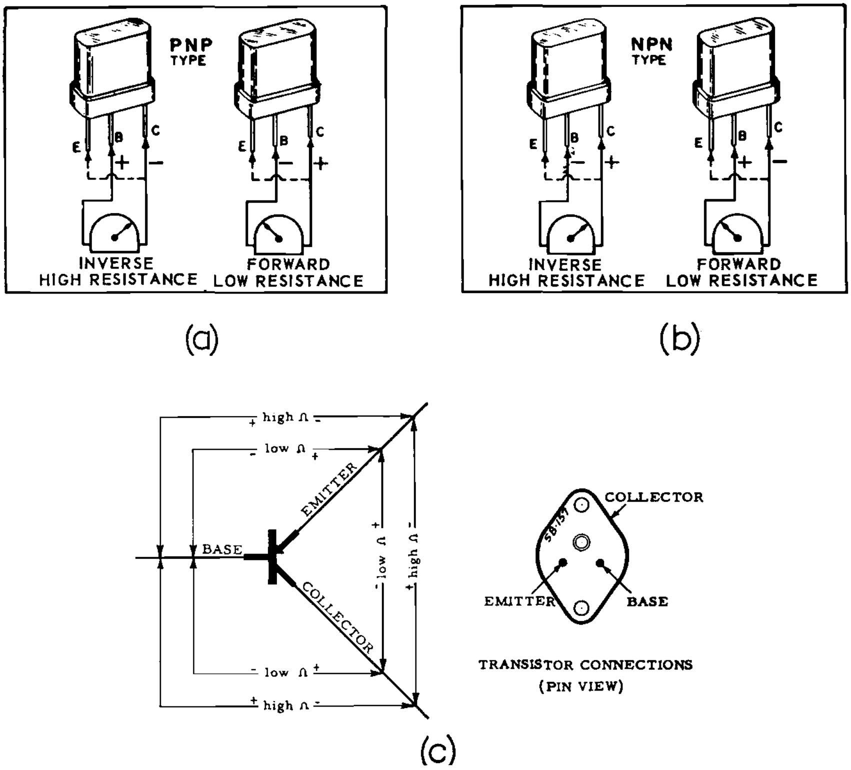

Fig. 10-4: Relative Ohmmeter readings between various electrodes of PNP (a) and NPN (b) low-power and PNP (c) high power transistors.

EXPLANATION OF PARAMETER SYMBOLS

SMALL SIGNAL & HIGH FREQUENCY PARAMETERS (at specified bias)

Symbols	Abbreviated Definitions	
h_{ob}	Com. base – output admittance, input AC open-circuited	
h_{ib}	Com. base – input impedance, output AC short-circuited	
h_{rb}	Com. base – reverse voltage transfer ratio, input AC open-circuited	
h_{fb}	Com. base	forward current transfer ratio, output AC short-circuited
h_{fe}	Com. emitter	
h_{fc}	Com. collector	
h_{oe}, h_{ie}	Examples of other corresponding com. emitter symbols	
f_{ab}	Com. base	the frequency at which the magnitude of the small-signal short-circuit forward current transfer ratio is 0.707 of its low frequency value.
f_{ae}	Com. emitter	
f_{MAX}	Maximum frequency of oscillation	
C_{ob}	Collector to base	Capacitance measured across the output terminals with the input AC open-circuited
C_{oe}	Collector to emitter	
r'_b	Base spreading resistance	
G_e	Com. emitter Power Gain (use G_b for com. base)	
CG_e	Conversion gain	
NF	Noise Figure	

SWITCHING CHARACTERISTICS (at specified bias)

t_d	Ohmic delay time	These depend on both transistor and circuit parameters
t_r	Rise time	
t_s	Storage time	
t_f	Fall time	
V_{CE} (SAT.)	Saturation voltage at specified I_C and I_B. This is defined only with the collector saturation region.	
h_{FE}	Com. emitter – static value of short-circuit forward current transfer ratio, $h_{FE} = \frac{I_C}{I_B}$	
h_{FE} (INV)	Inverted h_{FE} (emitter and collector leads switched)	

UNIJUNCTION TRANSISTOR MEASUREMENTS

I_{B2} (MOD)	Modulated interbase current
I_P	Peak point emitter current
I_V	Valley current
R_{BBO}	Interbase resistance
V_{BB}	Interbase voltage
V_V	Valley voltage
η	Intrinsic stand-off ratio. Defined by $V_P = \eta V_{BB} + \frac{200}{T_J}$ (in ° Kelvin)

TABLE 10-A: Definitions of basic parameter symbols.

DC MEASUREMENTS

I_C, I_E, I_B	DC currents into collector, emitter, or base terminal	
V_{CB}, V_{EB}	Voltage collector to base, or emitter to base	
V_{CE}	Voltage collector to emitter	
V_{BE}	Voltage base to emitter	
BV_{CBO}	Breakdown voltage, collector to base junction reverse biased, emitter open-circuited (value of I_C should be specified)	
V_{CEO}	Voltage collector to emitter, at zero base current, with the collector junction reverse biased. Specify I_C.	
BV_{CEO}	Breakdown voltage, collector to emitter, with base open-circuited. This may be a function of both "m" (the charge carrier multiplication factor) and the h_{fb} of the transistor. Specify I_C.	
V_{CER}	Similar to V_{CEO} except a resistor of value "R" between base and emitter.	
V_{CES}	Similar to V_{CEO} but base shorted to emitter.	
V_{PT}	Punch-through voltage, collector to base voltage at which the collector space charge layer has widened until it contacts the emitter junction. At voltages above punch-through, $V_{PT} = V_{CB} - V_{EB}$	
V_{CCB}	Supply voltage collector to base	NOTE — third subscript may be omitted if no confusion results.
V_{CCE}	Supply voltage collector to emitter	
V_{BBE}	Supply voltage base to emitter	
I_{CO}, I_{CBO}	Collector current when collector junction is reverse biased and emitter is DC open-circuited.	
I_{EO}, I_{EBO}	Emitter current when emitter junction is reverse biased and collector is DC open-circuited.	
I_{CEO}	Collector current with collector junction reverse biased and base open-circuited.	
I_{CES}	Collector current with collector junction reverse biased and base shorted to emitter.	
I_{ECS}	Emitter current with emitter junction reverse biased and base shorted to collector.	
R_{SC}	Collector saturation resistance	

OTHER SYMBOLS USED

P_{CM}	Peak collector power dissipation for a specified time limit
P_{CAV}	Average maximum collector power dissipation
P_o	Power output
Z_i	Input impedance
Z_o	Output impedance
T_A	Operating Temperature
T_J	Junction Temperature
T_{STG}	Storage Temperature

NOTE: In devices with several electrodes of the same type, indicate electrode by number. Example: I_{B2}. In multiple unit devices, indicate device by number preceding electrode subscript. Example: I_{2C}. Where ambiguity might arise, separate complete electrode designations by hyphens or commas. Example: $V_{1C1-2C1}$ (Voltage between collector #1 of device #1 and collector #1 of device #2.)

NOTE: Reverse biased junction means biased for current flow in the high resistance direction.

sible, use a VTVM or *series-type* Ohmmeter having an internal battery voltage of 4.5 volts *or less.* Don't use a *shunt-type* Ohmmeter. If in doubt about the type of instrument you have, connect a 1000 ohm resistor in series with one Ohmmeter lead when making the tests, subtracting its value from your final readings. A 100 ohm resistor may be used when checking power transistor types. In either case, the series resistor serves to limit "forward" currents to safe values.

TRANSISTOR REFERENCE TABLES. Reproduced here through the courtesy of *General Electric's* Semiconductor Division, Tables 10-A, 10-B and 10-C supply useful data on transistor specifications and characteristics. Table 10-A lists and defines the symbols used to identify transistor parameters. Table 10-B explains basic transistor ratings and lists JETEC registered transistor types made by all manufacturers, giving both maximum ratings and typical operating values for various parameters. This is not a complete listing of all transistor types which may be available, however, for some types are made only for military use, others are not assigned JETEC registration, and still others are made as experimental or developmental units in limited quantities. In addition, new transistor types are being introduced almost on a month-by-month basis by nearly every major manufacturer. For the latest specifications of any particular transistor type, it is best to contact the manufacturer of that unit and to obtain appropriate Technical Data Sheets. Table 10-C, finally, gives overall outlines, dimensions, and lead (pin) connections of various transistor types; most small transistors employ the *lead arrangements* given at 3 or 4, regardless of actual body shape or overall dimensions. Refer to Fig. 10-4(c) for standard power transistor connections.

Transistor interchangeability data is given in Tables 10-D and 10-E, reproduced here through the courtesy of *Bendix Red Bank* and *RCA*'s Semiconductor Division, respectively. Table 10-D refers specifically to power transistor types, while 10-E lists all types. In each Table, however, standard transistor types are listed, together with the individual manufacturer's suggested replacement. A cross-reference between *other types* may be obtained simply by noting which have identical "replacements" specified.

As a general rule, low-frequency (audio) transistor type can be interchanged without difficulty as long as maximum ratings are observed and the units have similar gain (*alpha* or *beta*) figures . . . and, of course, are of the same general type (*PNP* or *NPN*). Difficulties may be encountered when substitutions are made in R.F. or I.F. circuits, however. If a replacement has less gain that the original, the circuit will suffer a loss of sensitivity; if more gain, regeneration, and, possibly, oscillation may result. In any case, a change in circuit neutralization (which depends on interelectrode capacities

EXPLANATION OF SYMBOLS

TYPES AND USES:

Si—Silicon High Temperature Transistors (all others germanium)
Pt—Point contact types
AF—Audio Frequency Amplifier—Driver
AF Out—High current AF Output
Pwr—Power output 1 watt or more
RF—Radio Frequency Amplifier
Osc—High gain High frequency RF oscillator
IF—Intermediate Frequency Amplifier
lo IF—Low IF (262 Kc) Amplifier
Sw—High current High frequency switch
AF Sw—Low frequency switch

RATINGS:

P_C=*Maximum collector dissipation* at 25°C (76°F) ambient room temperature. Secondary designations are ratings with connection to an appropriate heat sink.

BV_{CE}=*Minimum collector-to-emitter breakdown voltage.* GE transistors measured with Base-to-emitter resistance as follows:
10K for AF and AF Out PNP
1 Meg for RF, IF, and Osc PNP
Open circuit for NPN

*Under BV_{CE}=Minimum collector-to-base breakdown voltage (for grounded base applications).

I_C=*Maximum collector current.* (Negative for PNP, Positive for NPN.)

T_J=Maximum centigrade *junction temperature.* P_C must be derated linearily to O mw dissipation at this temperature.

h_{fe}=Small signal base to collector *current-gain,* or Beta (except where emitter to collector gain, alpha α, is given).

f_{ab}=*Alpha cut-off-frequency.* Frequency at which the emitter to collector current gain, or alpha, is down to $1\sqrt{2}$ or .707 of its low frequency audio value. For some power transistors, the Beta or base-to-collector current-gain cutoff—frequency is given as noted.

G_e=Grounded-emitter *Power Gain.*
AF, AF Out, and Pwr Gain measured at 1 Kc.
RF, IF, and Osc Gains at 455 Kc.
(Sw Gain is dependent on circuit and wave-shape.)
(All measured at typical power output level for given transistor type.)

P_o=Maximum *Power Output* at 5% harmonic distortion, in mw except where noted as watts. Class A single-ended, Class B Push Pull.

MANUFACTURERS:

Am—Amperex
Bendix—Bendix Aviation Corp.
CBS—CBS-Hytron.
Cle—Clevite Transistor Products.
Dlc—Delco Radio Div., General Motors Corp.
GE—General Electric Company.
GP—Germanium Products Corp.
Mall—P. R. Mallory and Company, Inc.
Mar—Marvelco, National Aircraft Corp.
M-H—Minneapolis-Honeywell Regulator Co.
Motor—Motorola, Inc.
Mu—Mullard Ltd.
Phil—Philco.
Ray—Raytheon Manufacturing Company.
RCA—RCA.
Sprague—Sprague Electronics Company.
Syl—Sylvania Electric Products Company.
TI—Texas Instruments, Inc.
TS—Tung-Sol.
W—Westinghouse Electric Corp.
WE—Western Electric Company.

					MAX. RATINGS				TYPICAL VALUES				
JETEC No.	Type	Mfr.	Use	Dwg. No.	P_C mw @ 25°C	BV_{CE}	I_C ma	T_J°C	h_{fe}	f_{ab} mc	G_e db	P_o mw — Class A	B
2N22	Pt	WE	Sw		120	−100	−20	55	1.9α				
2N23	Pt	WE	Sw		80	−50	−40	55	1.9α				
2N24	Pt	WE	AF		120	−30	−25	50	2.2α				
2N25	Pt	WE	AF		200	−50	−30	60	2.5α				
2N26	Pt	WE	Sw		90	−30	−40	55					
2N27	NPN	WE	AF		50	35	100	85	100	1			
2N28	NPN	WE	AF		50	30	100	85	100	.5			
2N29	NPN	WE	AF		50	35	30	85	100	1			
2N30	Pt	GE	Obsolete		100	30	7	40	2.2α	2	17		
2N31	Pt	GE	Obsolete		100	30	7	40	2.2α	2			
2N32	Pt	RCA			50	−40	−8	40	2.2α	2.7	21		
2N33	Pt	RCA	Obsolete		30	−8.5	−7	40			Osc.		
2N34	PNP	RCA	AF		50	−25	−8	50	40	.6	40		
2N35	NPN	RCA	IF		50	25	8	50	40	.8	40		125
2N36	PNP	CBS	AF		50	−20	−8	50	45		40		
2N37	PNP	CBS	AF		50	−20	−8	50	30		36		
2N38	PNP	CBS	AF		50	−20	−8	50	15		32		
2N38A	PNP	CBS	AF		50	−20	−8	50	18		32		
2N41	PNP	RCA			50	−25	−15	50	40		40		
2N43	PNP	GE	AF	1	240	−30	−300	100	53	1.3	40	40	
2N43A	PNP	GE	AF	1	155	−25		100	53	1.3	40	40	
2N44	PNP	GE	AF	1	240	−30	−300	100	31	1.0	39	40	
2N45	PNP	GE	Obsolete		155	−25		100	31	1.0	38	40	
2N46	PNP	RCA				see 2N41							
2N47	PNP	Phil	AF		50	−35	−20	65	38	8	40		
2N48	PNP	Phil	AF		50	−35	−20	65	32	8	40		
2N49	PNP	Phil	AF		50	−35	−20	65	38	8	40		
2N50	Pt	Cle			50	−15	−1	50	2α	3	20		
2N51	Pt	Cle	Sw		100	−50	−8	50			20		
2N52	Pt	Cle	RF		120	−50	−8	50			20		
2N53	Pt	Cle	RF		100	−50	−8	50	2α	5	20		
2N54	PNP	W	AF		200	−45	−10	60	32	.5	40		
2N55	PNP	W	AF		200	−45	−10	60	20	.5	39		
2N56	PNP	W	AF		200	−45	−10	60	12	.5	38		
2N57	PNP	W	Pwr		20W	−60	−.8A		60		14	5W	
2N59	PNP	W	AF Out		180	−20	−200	85	90		30	30	300

TABLE 10-B: Registered transistor types and their basic characteristics.

					MAX. RATINGS				TYPICAL VALUES				
JETEC No.	Type	Mfr.	Use	Dwg. No.	P_C mw @ 25°C	BV_{CE}	I_C ma	T_J°C	h_{fe}	f_{ab} mc	G_e db	P_o mw — Class A	B
2N60	PNP	W	AF Out		180	−20	−200	85	65		28	30	300
2N61	PNP	W	AF Out		180	−20	−200	85	45		26	30	300
2N62	PNP	Phil	Obsolete		50	−35	−20		40				
2N63	PNP	Ray	AF		100	−22	−10	85	22	6	39	40	
2N64	PNP	Ray	AF		100	−15	−10	85	45	8	41	40	
2N65	PNP	Ray	AF		100	−12	−10	85	90	1.2	42	40	
2N66	PNP	WE	Obsolete		1W	−40	.8A	80		.2			
2N68	PNP	Syl	Pwr		2W/4W	−25	−1.5A	70	40	.4	23	600	5W
2N71	PNP	W	Pwr		1W	−50	−250	60		.25	25	400	
2N72	Pt	RCA	Obsolete		50	−40	−20	55		2.5			
2N73	PNP	W	AF Sw		200	−50					low level		
2N74	PNP	W	AF Sw		200	−50					high level		
2N75	PNP	W	AF Sw		200	−50					very low level		
2N76	PNP	GE	Obsolete		50	−20	−10	60	20	1	38		
2N77	PNP	RCA	AF		35	−25	−15	50	55	.7	44	50	
2N78	NPN	GE	RF	3	65	15	20	85	70	9	28		
2N79	PNP	RCA	AF		35	−30	−50		46	.7	44	50	
2N80	PNP	CBS	AF		50	−25	−8	Hi	80				
2N81	PNP	GE	Obsolete		50	−20	−15	100	30				
2N82	PNP	CBS	AF		35	−20	−15	Hi	30				
2N94	NPN	Syl	RF Sw		30	20	50	75	30	3	38		
2N94A	NPN	Syl	RF Sw		30	20	50	75	40	6	38		
2N95	NPN	Syl	Pwr		2.5W/4W	25	1.5A	70	40	.4	23	600	5W
2N96	PNP	RCA	Obsolete		50	−30*	−20	55	35	.5			
2N97	NPN	GP	IF		50	30	10	75	13	1	20		
2N97A	NPN	GP	IF		50	40	10	85	13	1	20		
2N98	NPN	GP	IF		50	40	10	75	38	2.5	22		
2N98A	NPN	GP	IF		50	40	10	85	38	2.5	22		
2N99	NPN	GP	IF		50	40	10	75	38	3.5	22		
2N100	NPN	GP	IF		25	25	5	50	100	5	23		
2N101	PNP	Syl	Pwr		1W	−25	−1.5A	70			23	600	
2N102	NPN	Syl	Pwr		1W	25	1.5A	70			23	600	5W
2N103	NPN	GP	Genl IF		50	35	10	75	5	.75	15		
2N104	PNP	RCA	AF		70	−30	−50	70	44	.7	41		
2N105	PNP	RCA	AF		35	−25	−15	50	55	.75	42		
2N106	PNP	Ray	AF		100	−6	−10	85	45	.8	36	40	
2N107	PNP	GE	AF	1	50	−6	−10	60	20	1	38		
2N108	PNP	CBS	AF Out		50	−20	−15						35
2N109	PNP	RCA	AF Out		50	−12	−35	50	70		33	75	150
2N110	Pt	WE	Sw		180	−50*	−50	85	32	5.0			
2N111	PNP	Ray	IF		150	−15	−200	85	40	3	30		
2N111A	PNP	Ray	IF		150	−15	−200	85	40	3	33		
2N112	PNP	Ray	RF		150	−15	−200	85	40	5	32		
2N112A	PNP	Ray	IF		150	−15	−200	85	40	5	35		
2N113	PNP	Ray	RF		100	−6	−5	85	45	10	33		
2N114	PNP	Ray	RF Sw		100	−6	−5	85	65	20			
2N117	NPN	TI	Si (=903)		150	45*	25	175	12	4			
2N118	NPN	TI	Si (=904)		150	45*	25	175	24	5			
2N119	NPN	TI	SiAF		150	45*	25	175	.98a	6			
2N123	PNP	GE	RF Sw	8	100	−20	−125	85	50	8			
2N124	NPN	TI	RF Sw		50	10	8	75	18	3			
2N125	NPN	TI	RF Sw		50	10	8	75	32	5			
2N126	NPN	TI	RF Sw		50	10	8	75	60	5			
2N127	NPN	TI	RF Sw		50	10	8	75	130	5			
2N128	PNP	Phil	SB Osc		30	−4.5	−5	85	35	60			
2N129	PNP	Phil	SB Osc		30	−4.5	−5	85	20	40			
2N130	PNP	Ray	AF		84	−22	−10	85	22		39		
2N131	PNP	Ray	AF		84	−15	−10	85	45		41		
2N132	PNP	Ray	AF		84	−12	−10	85	90		42		
2N133	PNP	Ray	AF		84	−15	−10	85	25		36		
2N135	PNP	GE	IF	8	100	−12	−50	85	20	4.5	29		
2N136	PNP	GE	RF	8	100	−12	−50	85	40	6.5	31		
2N137	PNP	GE	RF	8	100	−6	−50	85	60	10	33		
2N138	PNP	Ray	AF Out		50	−12	−20	40	140		30		50
2N138A	PNP	Ray	AF Out		80	−45	−100	85	10		29	25	100
2N139	PNP	RCA	IF		35	−16	−15	70	48	4.7	29		
2N140	PNP	RCA	Osc		35	−16	−15	70	45	7	28		
2N141	PNP	Syl	Pwr		1.5W/4W	−30	−.8A	65	40	.4	26	600	5W
2N142	NPN	Syl	Pwr		1.5W/4W	30	.8A	65	40	.4	26	600	5W
2N143	PNP	Syl	Pwr		1W/4W	−30	−.8A	65	40	.4	26	600	5W
2N144	NPN	Syl	Pwr		1W/4W	30	.8	65	40	.4	26	600	5W
2N145	NPN	TI	IF		65	20	5	75			33 max		
2N146	NPN	TI	IF		65	20	5	75			36 max		
2N147	NPN	TI	Osc		65	20	5	75			39 max		
2N148	NPN	TI	lo IF		65	16	5	75			35 max		
2N148A	NPN	TI	lo IF		65	32	5	75			35 max		
2N149	NPN	TI	lo IF		65	16	5	75			38 max		
2N149A	NPN	TI	lo IF		65	32	5	75			38 max		
2N150	NPN	TI	lo IF		65	16	5	75			41 max		
2N150A	NPN	TI	lo IF		65	32	5	75			41 max		
2N155	PNP	CBS	Pwr		8.5W	−30	−3A	85	48	.18	33	2W	9W
2N156	PNP	CBS	Pwr		8.5W	−30	−3A	85	40	.18	36	2W	9W
2N158	PNP	CBS	Pwr		8.5W	−60	−3A	85	40	.18	40	2W	17W
2N158A	PNP	CBS	Pwr		8.5W	−60	−3A	85	41	.18			
2N159	Pt	Sprague	Sw		80	−50	−10			2			

JETEC No.	Type	Mfr.	Use	Dwg. No.	MAX. RATINGS				TYPICAL VALUES				
					P_C mw @ 25°C	BV_{CB}	I_C ma	T_J°C	h_{fe}	f_{ab} mc	G_e db	P_o mw — Class A	B
2N160	NPN	GP	Si IF		150	40	25	150	14	4	34		
2N160A	NPN	GP	Si IF		150	40	25	150	14	4	34		
2N161	NPN	GP	Si RF		150	40	25	150	28	5	37		
2N161A	NPN	GP	Si RF		150	40	25	150	28	5	37		
2N162	NPN	GP	Si RF		150	40	25	150	38	8	38		
2N162A	NPN	GP	Si RF		150	40	25	150	38	8	38		
2N163	NPN	GP	Si RF		150	40	25	150	50	6	40		
2N163A	NPN	GP	Si RF		150	40	25	150	50	6	40		
2N164A	NPN	GE	Obsolete		65	15	20	85	40	8	39 max		
2N165	NPN	GE	Obsolete		65	15	20	85	72	5	36 max		
2N166	NPN	GE	Obsolete		25	6	20	50	32	5	24		
2N167	NPN	GE	Sw	3	75	30	75	85	30	9			
2N168	NPN	GE	Obsolete		55	15	20	75	20	6	39 max		
2N168A	NPN	GE	Osc	3	65	15	20	85	40	8	39 max		
2N169	NPN	GE	IF	3	65	15	20	85	72	9	35 max		
2N169A	NPN	GE	IF	3	65	25	20	85	72	9	35 max		
2N170	NPN	GE	RF	3	55	6	20	50	20	4	27		
2N172	NPN	TI	IF		65	16	5	75			28		
2N173	PNP	Dlc	Pwr		40W	−60	−7A	90	100	.6		8	20W
2N174	PNP	Dlc	Pwr		40W	−80	−7A	90	45	.2		20	80W
2N175	PNP	RCA	AF		20	−10	−2	50	65	.8	43		
2N176	PNP	Motor	Pwr			−12	−600	80			25	3W	
2N178	PNP	Motor	Pwr		10W	−12	−600	80	30		29	3W	
2N179	PNP	Motor	Pwr			−20	−60	88			32	300	
2N180	PNP	CBS	AF Out		150	−30	−25	75	60	.7	37	3W	300
2N181	PNP	CBS	AF Out		250	−30	−38	75	60	.7	34	110	600
2N182	NPN	CBS	IF		100	25	10	75	25	3.5			
2N183	NPN	CBS	Sw		100	25	10	75	40	7.5			
2N184	NPN	CBS	Sw		100	25	10	75	60	12			
2N185	PNP	TI	AF		150	−20	−150	50	55		40.5	2	250
2N186	PNP	GE	AF Out	1	100	−25	−200	85	24	.8	28		300
2N186A	PNP	GE	AF Out	1	200	−25	−200	85	24	.8	30		750
2N187	PNP	GE	AF Out	1	100	−25	−200	85	36	1	30		300
2N187A	PNP	GE	AF Out	1	200	−25	−200	85	36	1	30		750
2N188	PNP	GE	AF Out	1	100	−25	−200	85	54	1.2	32		300
2N188A	PNP	GE	AF Out	1	200	−25	−200	85	54	1.2	32		750
2N189	PNP	GE	AF	1	75	−25	−50	85	24	.8	37	1	
2N190	PNP	GE	AF	1	75	−25	−50	85	36	1	39	1	
2N191	PNP	GE	AF	1	75	−25	−50	85	54	1.2	41	1	
2N192	PNP	GE	AF	1	75	−25	−50	85	75	1.5	43	1	
2N193	NPN	Syl	Osc		50	15		75	6	3			
2N194	NPN	Syl	Osc		50	15	50	75	7.5	3.5	15		
2N206	PNP	RCA	AF		75	−30	−50	85	47	.8	46		
2N207	PNP	Phil	AF		50	−12	−20	65	100	2			
2N207A	PNP	Phil	AF		50	−12	−20	65	100	2			
2N207B	PNP	Phil	AF		50	−12	−20	65	100	2			
2N211	NPN	Syl	Osc		50	10	50	75	30	3.5			
2N212	NPN	Syl	Osc		50	10	50	75	15	6	22		
2N213	NPN	Syl	AF		50	25	100	75	150		42		
2N214	NPN	Syl	AF Out		125	25	75	70	70	.8	29		200
2N215	PNP	RCA	AF		50	−30	−50	70	44	.7	41		
2N216	NPN	Syl	IF		50	15	50	75	15	3	26		
2N217	PNP	RCA	AF		50	−25	−70	50	70		33		160
2N218	PNP	RCA	IF		35	−16	−15	70	48	4.7	30		
2N219	PNP	RCA	Osc		80	−16	−15	71	75	10	27		
2N220	PNP	RCA	AF		50	−10	−2	71	65	.8	43		
2N223	PNP	Phil	AF		100	−18	−150	65	95	.6	37	1	
2N224	PNP	Phil	AF Out		150	−25	−150	75	75	.5	36		300
2N225	PNP	Phil	AF Out		150	−25	−150	75	75	.5	36		300
2N226	PNP	Phil	AF Out		100	−25	−150	65	55	.4	30		300
2N227	PNP	Phil	AF Out		100	−25	−150	65	55	.4	30		300
2N228	NPN	Syl	AF Out		50	25		75	70	.8	26		100
2N229	NPN	Syl	AF		50	12	40	75	25	1.6			
2N230	PNP	Mall	Pwr		15W	−30	−2A	85	83	.014 (β)			
2N233	NPN	Syl	AF		50	10	50	75	4.5				
2N234	PNP	Bendix	Pwr		25W	−30	−3A	90			25	2	
2N234A	PNP	Bendix	Pwr		25W	−30	−3A	90			25	2	
2N235	PNP	Bendix	Pwr		25W	−40	−3A	90			33	2W	
2N235A	PNP	Bendix	Pwr		25W	−40	−3A	90			33	2W	
2N236	PNP	Bendix	Pwr		25W	−40	−3A	95			35	4	
2N236A	PNP	Bendix	Pwr		25W	−40	−3A	95			35	4	
2N237	PNP	Mar	AF		150	−45	−20	55	70	1	44		
2N238	PNP	TI	AF		50	−20		60			42		
2N240	PNP	Phil	SB Sw		10	−6	−15		16				
2N241	PNP	GE	AF Out	1	100	−25	−200	85	73	1.3	35		300
2N241A	PNP	GE	AF Out	1	200	−25	−200	85	73	1.3	35		750
2N242	PNP	Syl	Pwr			−45	−2A	100	40	5 Kc (β)	30	2.5W	
2N243	NPN	TI	SiAF		750	60*	60	150	.94α		30		
2N244	NPN	TI	SiAF		750	60*	60	150	.97α		30		
2N247	PNP	RCA	Drift RF		35	−35	−10	85	60	30	(37 @ 1.5Mc)		
2N248	PNP	TI	RF		30	−25	−5	85	20	50	12		
2N249	PNP	TI	AF Out		350	−25	−200	60	45		31	50	500
2N250	PNP	TI	Pwr		12W	−30	−2A	80	50	6 Kc	34	6W	
2N251	PNP	TI	Pwr		12W	−60	−2A	80	50	6 Kc	34	6W	

					MAX. RATINGS				TYPICAL VALUES				
JETEC No.	Type	Mfr.	Use	Dwg. No.	P_c mw @ 25°C	BV_{CE}	I_c ma	T_J°C	h_{fe}	f_{ab} mc	G_e db	P_o mw — Class A	B
2N253	NPN	TI	IF		65	12	5	75			30		
2N254	NPN	TI	IF		65	20	5	75			34		
2N255	PNP	CBS	Pwr		1.5W/6.25W	−15	−3A	85	40	.2	23	1W	5W
2N256	PNP	CBS	Pwr		1.5W/6.25W	−30	−3A	85	40	.2	26	2W	10W
2N257	PNP	Cle	Pwr		2W/25W	−20		85	50	7 Kc (β)	30	1W	
2N260	PNP	Cle	Si		200	−10	−50	150	16	1.8	38		
2N260A	PNP	Cle	Si		200	−30	−50	150	16	1.8	38		
2N261	PNP	Cle	Si		200	−75	−50	150	10	1.8	36		
2N262	PNP	Cle	Si RF		200	−10	−50	150	20	6	40		
2N262A	PNP	Cle	Si RF		200	−30	−50	150	20	6	40		
2N265	PNP	GE	AF	1	75	−25	−50	85	110	1.5	45		
2N267	PNP	RCA	RF Drift		Same as 2N247 except for flex. leads								
2N268	PNP	Cle	Pwr		2W/25W	−30			7	6 Kc (β)	28		
2N268A	PNP	Cle	Pwr		2W/10W	−60		90	20				
2N269	PNP	RCA	Sw		35	−20	−100	70	35	4			
2N270	PNP	RCA	AF Out		150	−25	−150	50	70		32		500
2N274	PNP	RCA	RF Drift		35	−40*	−10	85	60	30	45		
2N277	PNP	Dlco	Pwr		55W	−40	−12A	95	60	.5	34	16W	30W
2N278	PNP	Dlco	Pwr		55W	−50	−12A	95	60	.5	34	16W	30W
2N279	PNP	Am	AF		125	−20	−10	75	30	.3			
2N280	PNP	Am	AF		125	−20	−10	75	52	.3			
2N281	PNP	Am	AF			−16	−50	75	70	.35	34	38	
2N282	PNP	Am	AF (matched pr)		167	−16	−50	75	70	.35	23		390
2N283	PNP	Am	Sw		125	−20	−10	75	40	.5			
2N284	PNP	Am	Sw		125	−32	−125	75	45	.35 min			
2N284A	PNP	Am	Sw		125	−60	−125	75	45	.35 min			
2N290	PNP	Dlco	Pwr		55W	−70	−12A	95	50	.4	25	20W	85W
2N291	PNP	TI	AF		180	−25	−200	85	45		33	50	500
2N292	NPN	GE	IF	3	65	15	20	85	25	6	35 max		
2N293	NPN	GE	RF	3	65	15	20	85	25	7	39 max		
2N297	PNP	Cle	Pwr		15W	−60	−5A	85	35	6 Kc			
2N301	PNP	RCA	Pwr		12W	−40	−2A	85	70		30	2.7W	
2N301A	PNP	RCA	Pwr		12W	−60	−2A	85	70		30	2.7W	
2N302	PNP	Ray	Obsolete		150	−10	−200	85	45	7			
2N303	PNP	Ray	Obsolete		150	−30	−200	85	75	14			
2N306	NPN	Syl	AF		50	12		75	30	.75			
2N307	PNP	Syl	AF Out			−35	−1A	75	25	4			
2N307A	PNP	Syl	Pwr		17W	−35	−2A	75	20	3.5 Kc	27		
2N308	PNP	TI	IF		30	−20	−5	55			41		
2N309	PNP	TI	IF		30	−20	−5	55			43		
2N310	PNP	TI	IF AF		30	−30	−5	55			37		
2N311	PNP	Motor	Sw		75	−15		85	50				
2N312	NPN	Motor	Sw		75	15		85	50				
2N313	NPN	GE	Obsolete		65	15	20	85	25	5	36 max		
2N314	NPN	GE	Obsolete		65	15	20	85	25	8	39 max		
2N315	PNP	GT	Sw		100	−15	−200	85	20	5			
2N316	PNP	GT	Sw		100	−10	−200	85	30	12			
2N317	PNP	GT	Sw		100	−6	−200	85	30	20			
2N318	PNP	GT	Photo		50	−12	−20		100	.75			
2N319	PNP	GE	AF Out	2	240	−20	−200	85	33	2	30		750
2N320	PNP	GE	AF Out	2	240	−20	−200	85	48	2.5	32		750
2N321	PNP	GE	AF Out	2	240	−20	−200	85	48	3	35		750
2N322	PNP	GE	AF	2	140	−16	−100	85	70	2	39		
2N323	PNP	GE	AF	2	140	−16	−100	85	90	2.5	41		
2N324	PNP	GE	AF	2	140	−16	−100	85	80	3	43		
2N325	PNP	Syl	Pwr		12W	−35	−2A	85	40	.2			
2N326	NPN	Syl	Pwr		7W	35	2A	85	40	.2			
2N327	PNP	Ray	SiAF		335	−50	−100	160	14	.2	32		
2N328	PNP	Ray	AF		335	−35	−100	160	24	.35	34		
2N329	PNP	Ray	AF		335	−30	−100	160	50	.5	36		
2N330	PNP	Ray	AF		335	−45	−50	160	30	.25	34		
2N331	PNP	RCA	AF		200	−30*	−10	85	48	.7	44.5		
2N332	NPN	TI-GE	SiAF	4	150	45*	25	200	15	30	35		
2N333	NPN	TI-GE	SiAF	4	150	45*	25	200	35	33	39		
2N334	NPN	TI-GE	SiAF	4	150	45*	25	175	.975 α	8 min			
2N335	NPN	TI-GE	SiAF	4	150	45*	25	200	50	38	42		
2N336	NPN	TI-GE	SiAF	4	150	45*	25	175	.99 α	7			
2N344	PNP	Phil	RF (=SB101)		20	−5	−5	85	22	50			
2N345	PNP	Phil	RF (=SB102)		20	−5	−5	85	60	50			
2N346	PNP	Phil	RF (=SB103)		20	−5	−5	85	15	75			
2N350	PNP	Motor	Pwr		10W	−40*	−3A	90	30	5 Kc min	31		8W
2N351	PNP	Motor	Pwr		10W	−40*	−3A	90	45	5 Kc min	33		8W
2N352	PNP	Phil	Pwr		25W	−40	−2A	100	65	16 Kc	36	2.5W	10W
2N353	PNP	Phil	Pwr		30W	−40	−2A	100	90	16 Kc	36	5W	10W
2N354	PNP	Phil	Si Osc		150	−25	−50	140	18	15 f_{max}			
2N355	PNP	Phil	Si Sw		150	−10	−50	140	18	25 f_{max}			
2N356	NPN	GT	Sw		100	18	500	85	30	3			
2N357	NPN	GT	Sw		100	15	500	85	30	6			
2N358	NPN	GT	Sw		100	12	500	85	30	9			
2N376	PNP	Motor	Pwr		10W	−40*	−3A	90	60	5 Kc min	35		8W
2N378	PNP	TS	Sw		15W	−20	−3A	85	35	7 Kc (β)			
2N379	PNP	TS	Sw		15W	−40	−3A	85	30	7 Kc (β)			
2N380	PNP	TS	Sw		15W	−30	−3A	85	60	7 Kc (β)			

					MAX. RATINGS				TYPICAL VALUES				
JETEC No.	Type	Mfr.	Use	Dwg. No.	P_c mw @ 25°C	BV_{CB}	I_c ma	T_J°C	h_{fe}	f_{ab} mc	G_e db	P_o mw — Class A	B
2N381	PNP	TS	AF Out		200	−25	−200	85	50	1.2	25		500
2N382	PNP	TS	AF Out		200	−25	−200	85	75	1.5	33		500
2N383	PNP	TS	AF Out		200	−25	−200	85	100	1.8	31		500
2N384	PNP	RCA	RF Drift		120	−30	−10	85	.984 α	100	34		
2N386	PNP	Phil	Pwr		12.5W	−60	−3A	100	20	7 Kc			
2N387	PNP	Phil	Pwr		12.5W	−80	−3A	100	20	6 Kc			
2N393	PNP	Phil	Sw		50	−6	−50	85	155	60 f_{max}			
2N394	PNP	GE	Sw	2	150	−10	−200	100	150	5.5			
2N395	PNP	GE	Sw	2	150	−15	−200	100	150	7			
2N396	PNP	GE	Sw	2	150	−10	−200	100	150	7			
2N397	PNP	GE	Sw	2	150	−10	−250	100	150	10			
2N398	PNP	RCA	Sw	2	50	−105	−100	85	60				
2N399	PNP	Bendix	Pwr		25W	−40	−3A	90			33		
2N401	PNP	Bendix	Pwr		25W	−40	−3A	90			30		
2N402	PNP	W	AF		180	−20	−150	85	.96 α	600 Kc	37		
2N403	PNP	W	AF Out		180	−20	−200	85	.97 α	850 Kc	32	30	
2N404	PNP	RCA	Sw		120	−24	−100	85		12			
2N405	PNP	RCA	AF		150	−18	−35	85	35	650 Kc	43		
2N406	PNP	RCA	AF		150	−18	−35	85	35	650 Kc	43		
2N407	PNP	RCA	AF Out		150	−18	−70	85	65		33		160
2N408	PNP	RCA	AF Out		150	−18	−70	85	65		33		160
2N409	PNP	RCA	IF		80	−13	−15	85	45	6.8	38.8		
2N410	PNP	RCA	IF		80	−13	−15	85	45	6.8	38.8		
2N411	PNP	RCA	RF		80	−13	−15	85	75	10			
2N412	PNP	RCA	RF		80	−13	−15	85	75	10			
2N413	PNP	Ray	RF		150	−18	−200	85	30	2.5	10		
2N413A	PNP	Ray	IF		150	−15	−200	85	30	2.5	33		
2N414	PNP	Ray	RF		150	−15	−200	85	60	7	16		
2N414A	PNP	Ray	IF		150	−15	−200	85	60	7	35		
2N415	PNP	Ray	RF		150	−10	−200	85	80	10	30		
2N415A	PNP	Ray	IF		150	−10	−200	85	80	10	30		
2N416	PNP	Ray	RF		150	−12	−200	85	80	10	20		
2N417	PNP	Ray	RF		150	−10	−200	85	140	20	27		
2N422	PNP	Ray	AF		150	−20	−100	85	50	.8	38		
2N425	PNP	Ray	Sw		150	20	−400	85	15	4			
2N426	PNP	Ray	Sw		150	−18	−400	85	18	6			
2N427	PNP	Ray	Sw		150	−15	−400	85	20	11			
2N428	PNP	Ray	Sw		150	−12	−400	85	30	17			
2N438	NPN	CBS	Sw		100	30*		85	25	2.5 min			
2N439	NPN	CBS	Sw		100	30*		85	35	5 min			
2N440	NPN	CBS	Sw		100	30*		85	65	10 min			
2N444	NPN	GT	Sw		100	15		85	15	.5 min			
2N445	NPN	GT	Sw		100	12		85	35	2 min			
2N446	NPN	GT	Sw		100	10		85	60	5 min			
2N447	NPN	GT	Sw		100	6		85	125	9 min			
2N450	PNP	GE	Sw	8	150	−12	−125	85	60 min	11			
2N451	NPN	GE	SiPwr	6	85W	65	5A	150	16	400 Kc	4		
2N452	NPN	GE	SiPwr	6	85W	65	5A	150	12	400 Kc	2.5		
2N453	NPN	GE	SiPwr	6	85W	65	2A	150	30	400 Kc	6		
2N454	NPN	GE	SiPwr	6	85W	65	2A	150	15	400 Kc	10		
2N460	PNP	TS	AF		200	−45*	−400	100	.96α	1.2			
2N461	PNP	TS	AF		200	−45*	−400	100	.98α	1.2			
2N462	PNP	Phil	Sw		150	−40*	−200	75	45	.5 min			
2N464	PNP	Ray	AF		150	−40	−100	85	26	.7	40		
2N465	PNP	Ray	AF		150	−30	−100	85	45	.8	42		
2N466	PNP	Ray	AF		150	−20	−100	85	90	1	44		
2N467	PNP	Ray	AF		150	−15	−100	85	180	1.2	45		
2N489		GE	SiUni	5	SEE G-E TRANSISTOR SPECIFICATIONS								
2N490		GE	SiUni	5	SEE G-E TRANSISTOR SPECIFICATIONS								
2N491		GE	SiUni	5	SEE G-E TRANSISTOR SPECIFICATIONS								
2N492		GE	SiUni	5	SEE G-E TRANSISTOR SPECIFICATIONS								
2N493		GE	SiUni	5	SEE G-E TRANSISTOR SPECIFICATIONS								
2N494		GE	SiUni	5	SEE G-E TRANSISTOR SPECIFICATIONS								
2N495	PNP	Phil	SiOSC		150	−25	−50	140	18	15 f_{max}			
2N496	PNP	Phil	SiOSC		150	−10	−50	140	18	25 f_{max}			
2N508	PNP	GE	AF	2	140	−16	−100	85	125	3.5	45		
2N518	PNP	GE	Sw	8	150	−12	−125	85	60 min	11			
2N519	PNP	GT	Sw		100	−15		85	25	.5 min			
2N520	PNP	GT	Sw		100	−12		85	40	3 min			
2N521	PNP	GT	Sw		100	−10		85	70	8 min			
2N522	PNP	GT	Sw		100	−8		85	120	15 min			
2N523	PNP	GT	Sw		100	−6		85	200	21 min			
2N524	PNP	GE	AF	2	225	−30	−500	100	30	2			
2N525	PNP	GE	AF	2	225	−30	−500	100	44	2.5			
2N526	PNP	GE	AF	2	225	−30	−500	100	64	3.0			
2N527	PNP	GE	AF	2	225	−30	−500	100	81	3.3			
2N529	NPN-PNP	GT	AF		100	15		85	17	2.5			
2N530	NPN-PNP	GT	AF		100	15		85	22	3.0			
2N531	NPN-PNP	GT	AF		100	15		85	27	3.5			

					MAX. RATINGS				TYPICAL VALUES				
												P_o mw — Class	
JETEC No.	Type	Mfr.	Use	Dwg. No.	P_C mw @ 25°C	BV_{CE}	I_C ma	T_J°C	h_{fe}	f_{ab} mc	G_e db	A	B
2N532	NPN-PNP	GT	AF		100	15		85	32	4.0			
2N533	NPN-PNP	GT	AF		100	15		85	37	4.5			
2N538	PNP	M-H	Pwr		10W	−80*	−20	95		8 Kc			
2N538A	PNP	M-H	Pwr		10W	−80*	−20	95		8 Kc			
2N539	PNP	M-H	Pwr		10W	−80*	−20	95		7 Kc			
2N539A	PNP	M-H	Pwr		10W	−80*	−20	95		7 Kc			
2N540	PNP	M-H	Pwr		10W	−80*	−20	95		6 Kc			
2N540A	PNP	M-H	Pwr		10W	−80*	−20	95		6 Kc			
2N544	PNP	RCA	RF		80	−18*	−10	85	60	30	30.1		
2N554	PNP	Motor	Pwr		10W	−40*	−3A	90	30	8 Kc	34		
2N555	PNP	Motor	Pwr		10W	−40*	−3A	90	30	8 Kc	34		
2N574	PNP	M-H	Pwr		100W	−60*	−15A	95		6 Kc			
2N574A	PNP	M-H	Pwr		100W	−80*	−15A	95		6 Kc			
2N575	PNP	M-H	Pwr		100W	−60*	−15A	95		5 Kc			
2N575A	PNP	M-H	Pwr		100W	−80*	−15A	95		5 Kc			
2N577	PNP	Mu	Photo		25	−25	−10	55					
2N578	PNP	RCA	Sw		120	−14	−400	85	15	5			
2N579	PNP	RCA	Sw		120	−14	−400	85	30	8			
2N580	PNP	RCA	Sw		120	−14	−400	85	45	15			
2N581	PNP	RCA	Sw		80	−15	−100	85	30	8			
2N582	PNP	RCA	Sw		120	−14	−100	85	60	18			
2N583	PNP	RCA	Sw		80	−15	−100	85	30	8			
2N584	PNP	RCA	Sw		120	−14	−100	85	60	18			
2N585	NPN	RCA	Sw		120	24	200	85	40	5			
2N634	NPN	GE	Sw	2	150	20	300	85	15	8			
2N635	NPN	GE	Sw	2	150	20	300	85	25	12			
2N636	NPN	GE	Sw	2	150	20	300	85	35	17			
3N21	Pt	Syl	Sw		100	−60		50					
3N22	NPN	WE	RF			15*		85	96a	24			
3N23	NPN	GP			50	30	5			10	12		
3N23A	NPN	GP			50	30	5			20	14		
3N23B	NPN	GP			50	30	5			35	15		
3N23C	NPN	GP			50	30	5			50	17		
3N29	NPN	GE	Obsolete		50	6	20	85	100	40	10		
3N30	NPN	GE	Obsolete		50	6	20	85	100	80	10		
3N31	NPN	GE	Obsolete		50	6	20	85	100	20	10		
3N36	NPN	GE	RF	7	30	6	20	85	2.2∠−81°	50 min	11.5		
3N37	NPN	GE	RF	7	30	6	20	85	1.1∠−100°	90 min	9		

and gain) may be necessary, as well as realignment of the circuit. To avoid trouble, it is always best to *use exact duplicate replacement* types if possible.

Table 10-F lists the names and addresses of transistor and semiconductor manufacturers, and may be used as a guide when requesting technical data or specification sheets.

TRANSISTOR AMPLIFIER CHARACTERISTICS. Aside from its electrical specifications, a transistor's operating characteristics in a signal handling stage are determined by how its electrodes are connected and by the (D.C.) bias currents supplied to each electrode. Theoretically, any "amplifier," whether a single device or a complex multi-stage instrument, has two *input* and two *output* connections or terminals. Amplifying devices such as tubes and transistors have three active elements; in a vacuum tube, these are its plate, grid, and cathode, while in a transistor, the analogous electrodes are its collector, base, and emitter, respectively. With only three active elements in either device, one of these *must be common to both input and output circuits* when the units are used as amplifiers. The circuit arrangements which permit each electrode, in turn, to serve as the common element, constitute the basic *circuit-configurations*. These are shown and identified in Fig. 10-5, with the *common-base* configuration shown at (a), *common-emitter* at (b), and *common-collector* at (c). In practice, the "common" element may sometimes be connected to circuit ground, with the term "common" replaced with the expression "grounded." Thus, a common-base configuration may be called a grounded-base configuration in some cases, and so on. The three basic transistor circuit configurations are roughly analogous to the vacuum tube's *grounded-grid, grounded-cathode,* and *grounded-plate* (often called "cathode-follower") circuits, respectively. Since the transistor's common-collector configuration is roughly analogous to the vacuum tube's cathode-follower circuit, the former is sometimes called an "emitter-follower."

In practical equipment circuits, any of the three basic configurations may be used to handle D.C., audio, or R.F. signals, depending on the individual transistor's specifications, and on the nature of the input coupling and output load devices. For example, the output load may be a resistor, I.F. transformer primary, audio transformer primary, choke coil, deflection yoke (in a TV set), earphone, electromagnetic relay, or meter (in an instrument). The input signal may be supplied through a coupling capacitor or transformer, may be obtained from a transducer (such as a microphone or phonograph cartridge), or may be applied by a sensing device, such as a photocell or magnetic sensing coil. If the output signal is coupled back to the stage's input with the proper phase relationship and with sufficient amplitude to overcome circuit losses, the stage becomes an *oscillator.*

However, regardless of the type of signal handled and the specific input coupling device or output loads employed, an amplifier stage's *relative* input and output impedances, its voltage and power gain, and the phase relationship between its input and output signals depend on the circuit configuration used. The general operating characteristics of the three basic circuit configurations are summarized in Table 10-G.

Generally speaking, a circuit in which an input signal is applied between one active element and a common one, with the output signal obtained between the third active element and the common one, is called a *single-ended* stage. However, two amplifying devices may be connected in such a way that their input circuits and output loads have common connection points, with *identical* signals applied to each amplifier, except for *phase;* the signals, here, will be 180 electrical degrees out-of-phase, so that a *positive-going* signal is applied to one device while a *negative-going* signal is applied to the other, and vice-versa on succeeding half-cycles. This type of arrangement, requiring two transistors (or tubes), is a *push-pull* amplifier. In effect, one amplifier is said to "push" the signal through its load while the other is "pulling." Basic single-ended and push-pull amplifier circuits are diagrammed for comparison purposes in Figs. 10-6(a) and 10-6(b), respectively. Again, depending on the nature of the output loads and input devices, either type may be used to handle D.C., audio, or R.F. signals, and, with proper feedback, either may serve as an oscillator. Since the use of a single unit or a pair in push-pull is inde-

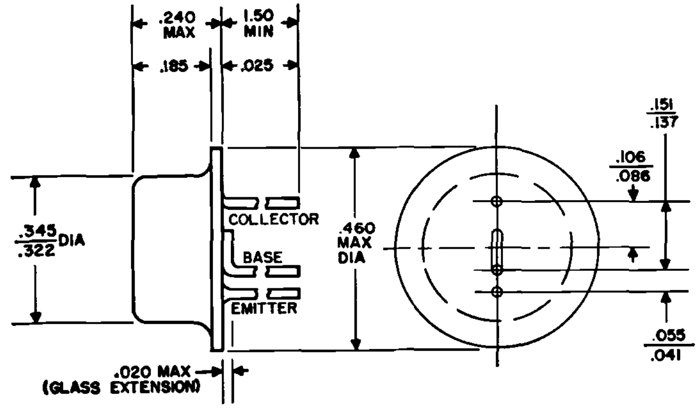

1

DIMENSIONS WITHIN
JETEC OUTLINE JETEC BASE
TO-5 E3-44

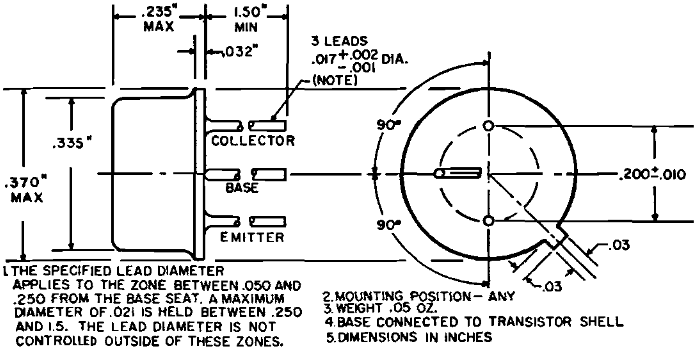

1. THE SPECIFIED LEAD DIAMETER APPLIES TO THE ZONE BETWEEN .050 AND .250 FROM THE BASE SEAT. A MAXIMUM DIAMETER OF .021 IS HELD BETWEEN .250 AND 1.5. THE LEAD DIAMETER IS NOT CONTROLLED OUTSIDE OF THESE ZONES.
2. MOUNTING POSITION – ANY
3. WEIGHT .05 OZ.
4. BASE CONNECTED TO TRANSISTOR SHELL
5. DIMENSIONS IN INCHES

2

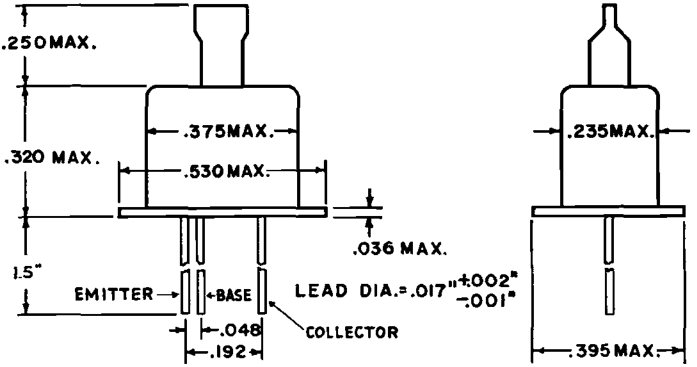

3

TABLE 10-C: Transistor outlines and lead connections. Also see Fig. 10-4(c). For types not easily identified by lead location or spacing, look for a colored dot or line (generally red). This identification is placed next to the COLLECTOR electrode by some manufacturers.

4

DIMENSIONS WITHIN JETEC OUTLINE
TO-5
JETEC BASE
E3-44

NOTE 1: This zone is controlled for automatic handling. The variation in actual diameter within this zone shall not exceed .010.

NOTE 2: Measured from max. diameter of the actual device.

NOTE 3: The specified lead diameter applies in the zone between .050 and .250 from the base seat. Between .250 and 1.5 maximum of .021 diameter is held. Outside of these zones the lead diameter is not controlled.

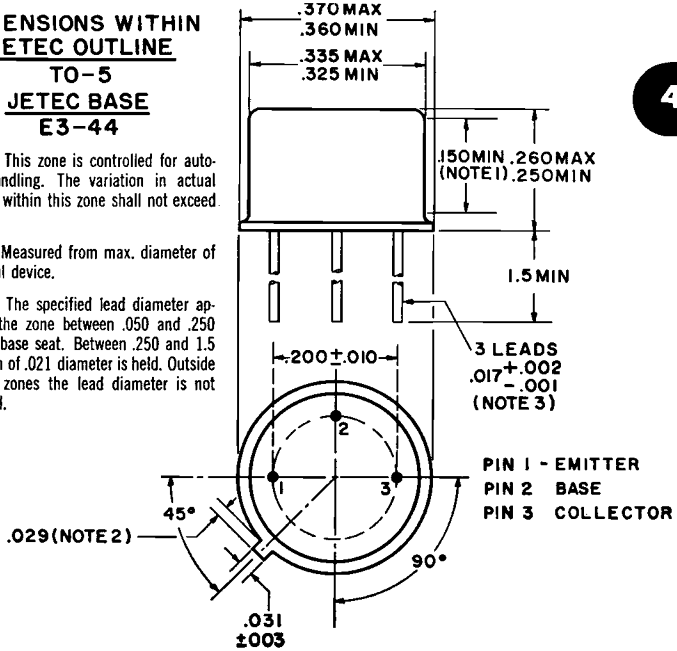

5

DIMENSIONS WITHIN JETEC OUTLINE....TO-5
JETEC BASE......E3-53

NOTE 1: This zone is controlled for automatic handling. The variation in actual diameter within this zone shall not exceed .010.

NOTE 2: Measured from max. diameter of the actual device.

NOTE 3: The specified lead diameter applies in the zone between .050 and .250 from the base seat. Between .250 and 1.5 maximum of .021 diameter is held. Outside of these zones the lead diameter is not controlled.

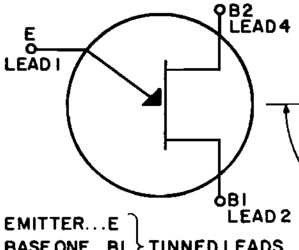

EMITTER...E
BASE ONE..B1
BASE TWO..B2
TINNED LEADS .017 +.002 -.001 (NOTE 3)

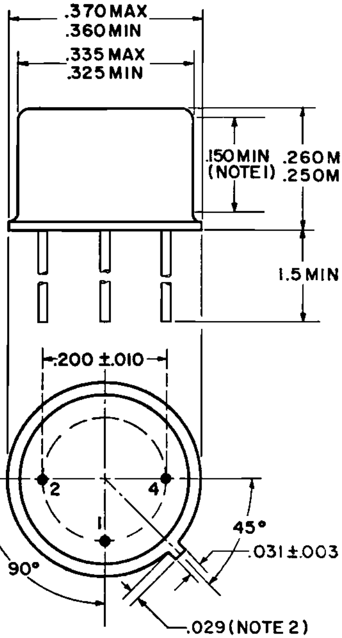

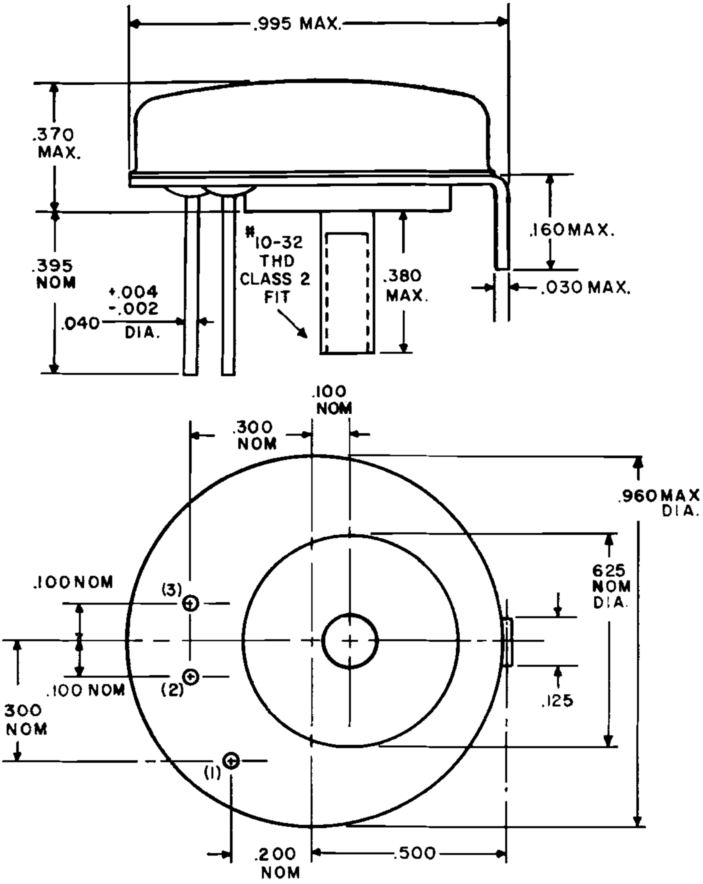

PIN 1 - EMITTER
PIN 2 BASE
PIN 3 COLLECTOR (INTERNALLY CONNECTED TO CASE)
WEIGHT: .40 OZ.

MAX. ALLOWABLE TORQUE ON STUD - 15 IN. LBS

7

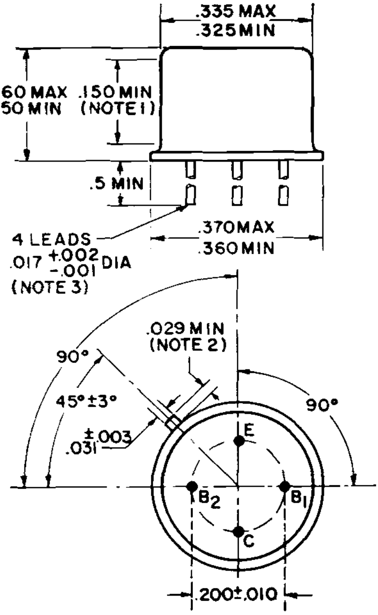

DIMENSIONS WITHIN JETEC OUTLINE TO-12 JETEC BASE E4-54

NOTE 1: This zone is controlled for automatic handling. The variation in actual diameter within this zone shall not exceed .010.

NOTE 2: Measured from max. diameter of the actual device.

NOTE 3: The specified lead diameter applies in the zone between .050 and .250 from the base seat. Between .250 and .5 maximum of .021 diameter is held. Outside of these zones the lead diameter is not controlled.

8

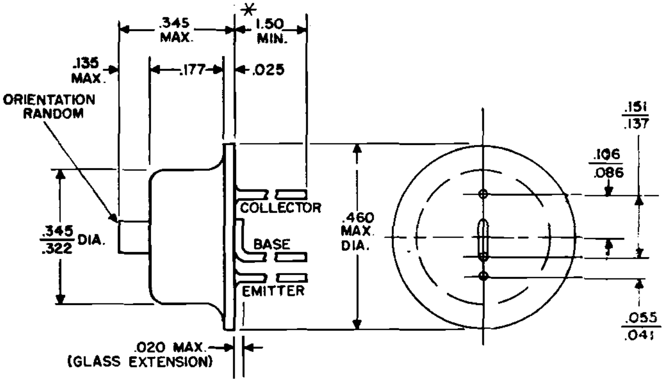

*
CUT TO 0.200" FOR USE IN SOCKETS.
LEADS TINNED DIA. .018
MOUNTING POSITION - ANY
WEIGHT: .05 OZ.
BASE CONNECTED TO TRANSISTOR SHELL.
DIMENSIONS IN INCHES.

pendent of the common element, any of the three basic configurations may serve in either single-ended or push-pull amplifiers.

Referring to Fig. 10-6(a), a *PNP* transistor is used in a single-ended common-emitter configuration, with the input signal applied between base and emitter, and the output obtained between collector and emitter. Base bias current is supplied through a resistive voltage-divider (100K-10K) and stabilized by the voltage developed across an emitter resistor (1K), bypassed by C1. A resistive collector load (RL - 5K) is used. The input signal is applied through a coupling capacitor, with the amplified output signal, appearing across RL, obtained through a D.C. blocking capacitor.

Transistor Type Number	BENDIX Transistor Replacement	Transistor Type Number	BENDIX Transistor Replacement	Transistor Type Number	BENDIX Transistor Replacement	Transistor Type. Number	BENDIX Transistor Replacement
2N155	2N235A	2N301	2N235A	2N538*	2N638B	2N678	2N678
2N158	2N639A	2N301A	2N235A	2N538A*	2N639B	2N678A	2N678A
2N158A	2N639A	2N307	2N234A	2N539*	2N637B	2N678B	2N678B
2N173*	2N677B	2N307A	2N235A	2N539A*	2N638B	2N678C	2N678C
2N174*	2N677C	2N350	2N236A	2N540*	2N637B	B-113	2N418
2N174A*	2N677C	2N351	2N236A	2N540A*	2N637B	B-134	2N677A
2N176	2N235A	2N352	2N235A	2N554	2N234A	B-134A	2N677B
2N178	2N235A	2N353	2N236A	2N555	2N235A	B-134B	2N677C
2N234	2N234A	2N375	2N639B	2N574*	2N677B	B-177	B-177
2N234A	2N234A	2N376	2N236B	2N574A*	2N677C	B-178	B-178
2N235	2N235A	2N378	2N639	2N575*	2N677B	B-179	B-179
2N235A	2N235A	2N379	2N639A	2N575A*	2N677C	CTP1104	2N234A
2N235B	2N235B	2N380	2N639A	2N627	2N677A	CTP1108	2N234A
2N236A	2N236A	2N386	2N638A	2N628	2N677B	CTP1109	2N234A
2N236B	2N236B	2N387	2N638B	2N629	2N677C	CTP1111	2N638
2N242	2N235A	2N399	2N399	2N630	2N677C	CTP1117	2N236A
2N250	2N235A	2N400	2N400	2N637	2N637	DT 80*	2N677C
2N251	2N639A	2N401	2N401	2N637A	2N637A	DT 100*	2N677C
2N255	2N234A	2N418	2N418	2N637B	2N637B	MN 32	2N235A
2N256	2N234A	2N419	2N419	2N638	2N638	X-137	2N677B
2N257	2N235A	2N420	2N420	2N638A	2N638A	X-160	2N420A
2N268	2N639A	2N420A	2N420A	2N638B	2N638B	X-163	2N638B
2N268A	2N639A	2N421	2N421	2N639	2N639	X-164	2N637B
2N277*	2N677A	2N441*	2N677	2N639A	2N639A	X-166	2N638A
2N278*	2N677	2N442*	2N677	2N639B	2N639B	X-167	2N637A
2N285	2N285A	2N443*	2N677B	2N677	2N677	X-168	2N639B
2N285A	2N285A	2N456	2N639	2N677A	2N677A	X-169	2N639A
2N296	2N639A	2N457	2N639A	2N677B	2N677B	X-171	2N639
2N297	2N639A	2N459	2N639B	2N677C	2N677C	X-172	2N638
						X-173	2N637

TABLE 10-D: POWER TRANSISTOR INTERCHANGEABILITY CHART. Prepared by BENDIX, this table lists standard power transistors and equivalent BENDIX types. To establish a correspondence between other types, check for those with the SAME BENDIX type listing. Types identified with an asterisk (*) are not in the standard "diamond" shaped package shown in Fig. 10-4(c).

The common-emitter configuration is also used in the push-pull circuit shown in Fig. 10-6(b); again, *PNP* types are employed. Here, the two input signals (having a 180° out-of-phase relationship, but

INTERCHANGEABILITY DIRECTORY

The following directory has been prepared to guide designers, experimenters, and servicemen in selecting the proper RCA transistor type as a replacement and to help identify and describe many of the transistor types which have been introduced on the market by different manufacturers. More than 500 type designations are listed including junction types, point-contact types and phototransistors.

In using the **Transistor Directory**, note that the basic type designations of different manufacturers may have been assigned according to different systems. Some basic designations consist only of a number such as 210, 355, 1032, etc.; others consist of a combination of letters and digits such as 2N77, X78, SB100, etc. In either case the basic designation may or may not have a prefix composed of one or more letters, such as CK, GT, H, OC, ZJ, etc., which indicates the particular manufacturer. For certain transistors, this prefix becomes an essential part of the type designation when as sometimes happens, two or more manufacturers utilize the same designation for different transistor types.

Identifying information about the **Type To Be Replaced** including the following: (1) manufacturer's prefix, if any, (2) the basic type designation in bold face, (3) symbol to designate the manufacturer, (4) symbol to indicate the description, for example, GPA=Germanium, p-n-p, Alloy-Junction Type (denotes the structural arrangement and kind of semiconductor materials used in the device), and (5) class of service is charted in the first five columns. The next two columns show the **RCA Direct Replacement Type**, or the **RCA Similar Type**, respectively, when one or the other is available.

Basic designations shown in Column 2 of the tabulation are listed in numerical — alphabetical sequence. Those starting with a digit are given first; those starting with a letter appear at the end of the tabulation.

Types listed in the Similar RCA Type column (Column 6) are **not directly interchangeable** with the types listed in the Basic Designation column because of mechanical and/or electrical differences. For more information as to degree of similarity refer to respective transistor data.

How to Use

1. Look in Column 2 for basic designation of type to be replaced.

2. If type to be replaced has a prefix, look for that prefix in Column 1.

For example: If type CK-762 is to be replaced, find the basic designation 762 in Column 2 and the prefix CK in Column 1.

3. Consult Column 6 for corresponding RCA Direct Replacement Type.

4. If no Direct RCA Replacement Type is shown consult Column 7 for RCA Similar Type and obtain respective transistor data to determine degree of similarity.

KEY TO SYMBOLS IN COLUMN 3

A = Amperex
B = Bendix
BOG = Bogue (Germanium Products)
CBS = CBS-Hytron
CC = Clevite Corporation
DEL = Delco
GE = General Electric
GT = General Transistor
HA = Hughes Aircraft
M = Motorola
MAL = Mallory
MII = Minneapolis-Honeywell
N = Nucleonics
NA = National Aircraft
NU = National Union
P = Philco
RCA = Radio Corporation of America
RK = Raytheon
RR = Radio Recepter
S = Sylvania
SPR = Sprague
SS = Scientific Specialities
TEC = Transitron
TI = Texas Instruments
TS = Tung-Sol
WE = Western Electric
WL = Westinghouse

KEY TO SYMBOLS IN COLUMN 4

GC = Germanium, Point-Contact Type
GNA = Germanium, n-p-n, Alloy-Junction Type
GNG = Germanium, n-p-n, Grown-Junction Type
GPA = Germanium, p-n-p, Alloy-Junction Type
GPD = Germanium, p-n-p, "Drift" Type
GPG = Germanium, p-n-p, Grown-Junction Type
GPS = Germanium, p-n-p, Surface-Barrier Type
SNA = Silicon, n-p-n, Alloy-Junction Type
SNG = Silicon, n-p-n, Grown-Junction Type
SPA = Silicon, p-n-p, Alloy-Junction Type
SPG = Silicon, p-n-p, Grown-Junction Type
SD = Semiconductor Diode

• RCA types shown in this column are direct replacements under all circumstances for corresponding types to be replaced.

† RCA types shown in this column are not directly interchangeable with the types to be replaced because of mechanical and/or electrical differences. For more information as to degree of interchangeability, refer to respective type data or write to Commercial Engineering, RCA, Somerville, New Jersey.

TABLE 10-E: GENERAL TRANSISTOR INTERCHANGEABILITY DIRECTORY.

INTERCHANGEABILITY DIRECTORY

1	2	3	4	5	6	7
Type To Be Replaced				Class of Service	Replace by RCA Type*	Similar RCA Type‡
Mfr. Prefix	Basic Designation	Mfr.	Description			
H	1	MH	GPA	AF Power Ampl		
H	2	MH	GPA	AF Power Ampl		
	2A	CC	GC	AF Amplifier		
	2B	CC	GC	Switching		
	2C	CC	GC	Switching		
	2D	CC	GC	Switching		
	2E	CC	GC	AF Amplifier		
	2G	CC	GC	Switching		
	2H	CC	GC	AF Amplifier		
	2L	CC	GC	Switching		
	2N21	WE	GC	Switching		
	2N21A	WE	GC	AF Amplifier		
	2N22	WE	GC	Switching		
	2N23	WE	GC	Switching		
	2N24	WE	GC	AF Amplifier		
	2N25	WE	GC	AF Amplifier		
	2N26	WE	GC	Switching		
	2N27	WE	GNG	AF Amplifier		2N104
	2N28	WE	GNG	AF Amplifier		2N104
	2N29	WE	GNG	Switching		
	2N30	GE	GC	AF Amplifier		
	2N31	GE	GC	Oscillator		
	2N32	RCA●	GC	Switching		
	2N32A	RCA●	GC	Switching		
	2N33	RCA●	GC	Oscillator		
	2N34	GT	GPA	AF Amplifier		2N109
	2N34	RCA●	GPA	AF Amplifier		2N109
	2N34	S	GPA	AF Amplifier		2N109
	2N34	TEC	GPA	AF Amplifier		2N109
	2N34A	RCA●	GPA	AF Amplifier		2N109
	2N35	RCA●	GNA	AF Amplifier		
	2N35	S	GNA	AF Amplifier		
	2N36	CBS	GPA	General Use		2N217
	2N36	GT	GPA	General Use		2N109
	2N37	CBS	GPA	General Use		2N109
	2N37	GT	GPA	General Use		2N109
	2N37	TEC	GPA	General Use		2N109
	2N38	CBS	GPA	AF Amplifier		2N109
	2N38	GT	GPA	AF Amplifier		2N109
	2N38	TEC	GPA	AF Amplifier		2N109
	2N38A	CBS	GPA	AF Amplifier		2N109
	2N38A	GT	GPA	AF Amplifier		2N109
	2N39	GT	GPA	General Use		
	2N39	SY	GPA	General Use		
	2N39	TEC	GPA	General Use		
	2N40	GT	GPA	General Use		
	2N40	SY	GPA	General Use		
	2N40	TEC	GPA	General Use		
	2N41	RCA●	GPA	AF Amplifier		2N105
	2N42	GT	GPA	General Use		
	2N42	SY	GPA	General Use		
	2N42	TEC	GPA	General Use		
	2N43	GE	GPA	AF Amplifier		2N109
	2N43	GT	GPA	AF Amplifier		2N109
	2N43	TEC	GPA	AF Amplifier		2N109
	2N43A	GE	GPA	AF Amplifier		2N206
	2N43A	TEC	GPA	AF Amplifier		2N206
	2N44	GE	GPA	AF Amplifier		2N109
	2N44	GT	GPA	AF Amplifier		2N109
	2N44	TEC	GPA	AF Amplifier		2N109
	2N44A	GE	GPA	AF Amplifier		2N109
	2N45	GE	GPA	AF Amplifier		2N109
	2N45	GT	GPA	AF Amplifier		2N109
	2N45	TEC	GPP	AF Amplifier		2N109
	2N46	RCA●	GPA	AF Amplifier		2N105
	2N47	P	GPA	AF Amplifier		2N105
	2N48	P	GPA	AF Amplifier		2N105
	2N49	P	GPA	AF Amplifier		2N105
	2N50	CC	GC	Switching		
	2N51	CC	GC	Switching		
	2N52	CC	GC	Oscillator		
	2N53	CC	GC	Switching		
	2N54	WL	GPA	AF Amplifier		2N109
	2N55	WL	GPA	AF Amplifier		2N109
	2N56	WL	GPA	AF Amplifier		2N109
	2N57	MH	GPA	AF Power Ampl		
	2N62	P	GPA	General Use		2N109
	2N63	GTC	GPA	AF Amplifier		2N217
	2N63	RR	GPA	AF Amplifier		2N217
	2N63	TEC	GPA	AF Amplifier		2N217
	2N64	GT	GPA	AF Amplifier		2N217
	2N64	RR	GPA	AF Amplifier		2N217
	2N64	TEC	GPA	AF Amplifier		2N217
	2N65	GT	GPA	AF Amplifier		2N217
	2N66	WE	GPA	AF Power Ampl		
	2N67	WE	GC	Switching		
	2N68	S	GPA	AF Power Ampl		
	2N69	WE	GPA	AF Amplifier		
	2N71	WL	GPA	AF Amplifier		
	2N72	RCA●	GC	Switching		
	2N73	WL	GPA	Switching		
	2N74	WL	GPA	Switching		
	2N75	WL	GPA	Switching		
	2N76	GE	GPA	AF Amplifier		2N104
	2N76	TEC	GPA	AF Amplifier		2N104
	2N77	RCA	GPA	AF Amplifier	2N77	
	2N78	GE	GNG	IF-RF Amplifier		2N139
	2N79	RCA●	GPA	AF Amplifier		2N206
	2N80	CBS	GPA	AF Amplifier		
	2N81	GE	GPA	AF Amplifier		
	2N82	CBS	GPA	AF Amplifier		
	2N83	TEC	GPA	AF Power Ampl		
	2N83A	TEC	GPA	AF Power Ampl		
	2N84	TEC	GPA	AF Power Ampl		
	2N84A	TEC	GPA	AF Power Ampl		
	2N85	TEC	GPA	AF Amplifier		2N109
	2N86	TEC	GPA	AF Amplifier		2N109
	2N87	TEC	GPA	AF Amplifier		2N109
	2N88	TEC	GPA	AF Amplifier		2N105
	2N89	TEC	GPA	AF Amplifier		2N105
	2N90	TEC	GPA	AF Amplifier		2N105
	2N91	TEC	GPA	Switching		
	2N92	TEC	GPA	Switching		
	2N94	S	GNA	Switching		2N139
	2N94A	S	GNA	Switching		2N139
	2N95	S	GNA	AF Power Ampl		
	2N96	RCA●	GPA	AF Amplifier		2N206
	2N97	BOG	GNG	AF Amplifier		
	2N97A	BOG	GNG	Switching		
	2N98	BOG	GNG	AF Amplifier		
	2N98A	BOG	GNG	Switching		
	2N99	BOG	GNG	Switching		
	2N100	BOG	GNG	AF Amplifier		
	2N101	S	GPA	AF Amplifier		
	2N102	S	GNA	AF Amplifier		
	2N103	BOG	GNG	AF Amplifier		
	2N104	RCA	GPA	AF Amplifier	2N104	
	2N105	RCA	GPA	AF Amplifier	2N105	
	2N106	RR	GPA	AF Amplifier		2N104
	2N107	GE	GPA	General Use		2N218
	2N108	CBS	GPA	AF Amplifier		
	2N109	A	GPA	AF Amplifier	2N109	
	2N109	GT	GPA	AF Amplifier	2N109	
	2N109	RCA	GPA	AF Amplifier	2N109	
	2N110	WE	GC	Switching		
	2N111	CC	GPA	IF Amplifier		2N218
	2N111	GT	GPA	IF Amplifier		2N218
	2N111	RR	GPA	IF Amplifier		2N218
	2N111A	RR	GPA	IF Amplifier		2N218
	2N112	CT	GPA	IF Amplifier		2N218
	2N112	GT	GPA	IF Amplifier		2N218
	2N112	RR	GPA	IF Amplifier		2N218
	2N112A	RR	GPA	IF Amplifier		2N218
	2N113	CC	GPA	IF Amplifier	2N139	
	2N113	GT	GPA	IF Amplifier	2N139	
	2N113	RR	GPA	IF Amplifier	2N139	
	2N114	GT	GPA	Converter	2N140	
	2N114	RR	GPA	Converter	2N140	
	2N115	A	GPA	AF Power Ampl		
	2N116	CBS	GPA	AF Amplifier		2N175
	2N117	TI	SNG	AF Amplifier		
	2N118	TI	SNG	AF Amplifier		
	2N119	TI	SNG	AF Amplifier		
	2N123	GE	GPA	Switching		2N404
	2N124	TI	GNA	Switching		
	2N125	TI	GNG	Switching		
	2N126	TI	GNG	Switching		
	2N127	TI	GNG	Switching		
	2N128	P	GPD	4 Mc Amplifier		2N247
	2N129	P	GPD	455 Kc Ampl		2N247
	2N130	GT	GPA	AF Amplifier		2N105
	2N130	RR	GPA	AF Amplifier		2N105
	2N131	GTC	GPA	AF Amplifier		2N105
	2N131	RR	GPA	AF Amplifier		2N105
	2N132	GT	GPA	AF Amplifier		2N105
	2N132	RR	GPA	AF Amplifier		2N105
	2N133	GT	GPA	AF Amplifier		2N175
	2N133	RR	GPA	AF Amplifier		2N175
	2N135	GE	GPA	IF-RF Amplifier		2N139
	2N136	GE	GPA	IF-RF Amplifier	2N139	
	2N137	GE	GPA	IF-RF Amplifier	2N140	
	2N138	RR	GPA	AF Amplifier		2N406
	2N138A	RR	GPA	AF Amplifier		2N406
	2N139	RCA	GPA	IF Amplifier	2N139	
	2N140	RCA	GPA	Converter	2N140	
	2N141	S	GPA	AF Power Ampl		
	2N142	S	GNA	AF Power Ampl		
	2N143	S	GPA	AF Power Ampl		
	2N144	S	GNA	AF Power Ampl		
	2N145	TI	GNG	455 Kc Ampl		2N218
	2N146	TI	GNG	455 Kc Ampl		2N218
	2N147	TI	GNG	455 Kc Ampl		2N218
	2N148	TI	GNG	262 Kc Ampl		
	2N148A	TI	GNG	262 Kc Ampl		
	2N149	TI	GNG	262 Kc Ampl		
	2N149A	TI	GNG	262 Kc Ampl		
	2N150	TI	GNG	262 Kc Ampl		
	2N150A	TI	GNG	262 Kc Ampl		
	2N151	MAL	GPA	AF Amplifier		
	2N152	MAL	GPA	AF Power Ampl		
	2N153	MAL	GPA	AF Power Ampl		
	2N154	MAL	GPA	AF Power Ampl		
	2N155	CBS	GPA	AF Amplifier		2N301
	2N156	CBS	GPA	AF Power Ampl		2N301
	2N158	CBS	GPA	AF Power Ampl		2N301
	2N159	SPR	GC	Switching		
	2N160	BOG	SNG	RF Amplifier		
	2N160A	BOG	SNG	RF Amplifier		
	2N161	BOG	SNG	RF Amplifier		
	2N161A	BOG	SNG	RF Amplifier		
	2N162	BOG	SNG	RF Amplifier		
	2N162A	BOG	SNG	RF Amplifier		
	2N163	BOG	SNG	RF Amplifier		
	2N163A	BOG	SNG	RF Amplifier		
	2N166	GE	GNG	IF Amplifier		2N218
	2N167	GE	GNG	Switching		2N269
	2N168	GE	GNG	IF Amplifier		2N139
	2N168A	GE	GNG	Converter		2N140
	2N169	GE	GNG	IF Amplifier		2N139
	2N169A	GE	GNG	IF Amplifier		2N139
	2N170	GE	GNG	RF Amplifier		2N139
	2N172	TI	GNG	Converter		2N140
	2N173	DEL	GPA	AF Power Ampl		2N301
	2N174	DEL	GPA	AF Power Ampl		
	2N175	RCA	GPA	AF Amplifier	2N175	
	2N176	M	GPA	AF Power Ampl		2N301
	2N178	M	GPA	AF Power Ampl		
	2N179	M	GPA	AF Power Ampl		
	2N180	CBS	GPA	General Use		2N109
	2N181	CBS	GPA	General Use		2N270
	2N182	CBS	GNA	Switching		2N269
	2N183	CBS	GNA	Switching		2N269
	2N184	CBS	GNA	Switching		2N269
	2N185	TI	GPA	AF Amplifier		2N109
	2N186	GE	GPA	AF Amplifier		2N109
	2N186A	GE	GPA	AF Amplifier		2N270
	2N187	GE	GPA	AF Amplifier		2N109
	2N187A	GE	GPA	AF Amplifier		2N270
	2N188	GE	GPA	AF Amplifier		2N109
	2N188A	GE	GPA	AF Amplifier		2N270
	2N189	GE	GPA	AF Amplifier		2N109
	2N190	GE	GPA	AF Amplifier		2N109
	2N191	GE	GPA	AF Amplifier		2N109
	2N192	GE	GPA	AF Amplifier		2N109
	2N193	S	GNA	Oscillator		
	2N194	S	GNA	Converter		2N219
	2N195	TEC	GPA	AF Amplifier		2N217
	2N196	TEC	GPA	AF Amplifier		2N217
	2N197	TEC	GPA	AF Amplifier		2N217
	2N198	TEC	GPA	AF Amplifier		2N217
	2N199	TEC	GPA	AF Amplifier		2N109
	2N200	TEC	GPA	AF Amplifier		2N206
	2N204	TEC	GPA	General Use		2N206
	2N205	TEC	GPA	General Use		2N206
	2N206	RCA	GPA	AF Amplifier	2N206	
	2N207	P	GPA	AF Amplifier		2N105
	2N207A	P	GPA	AF Amplifier		2N105
	2N207B	P	GPA	AF Amplifier		2N105
	2N211	S	GNA	Oscillator		
	2N212	S	GNA	Converter		
	2N213	S	GNA	AF Amplifier		
	2N214	S	GNA	AF Amplifier		
	2N215	RCA	GPA	AF Amplifier	2N215	
	2N216	S	GNA	IF Amplifier		
	2N217	A	GPA	AF Amplifier	2N217	
	2N217	RCA	GPA	AF Amplifier	2N217	
	2N218	RCA	GPA	IF Amplifier	2N218	
	2N219	RCA	GPA	Converter	2N219	
	2N220	RCA	GPA	AF Amplifier	2N220	
	2N222	GT	GPA	General Use		
	2N223	P	GPA	AF Amplifier		2N270
	2N224	P	GPA	AF Amplifier		2N270
	2N225	P	GPA	AF Amplifier		2N270
	2N226	P	GPA	AF Amplifier		2N270
	2N227	P	GPA	AF Amplifier		2N270
	2N228	S	GNA	AF Amplifier		
	2N229	S	GNA	General Use		
	2N230	MAL	GPA	AF Power Ampl		
	2N231	P	GPD	455 Kc Ampl		2N218
	2N232	P	GPD	455 Kc Ampl		2N218
	2N233	S	GNA	RF Amplifier		2N218
	2N233A	S	GNA	RF Amplifier		2N218
	2N234	B	GPA	AF Power Ampl		2N301
	2N234A	B	GPA	AF Power Ampl		2N301
	2N235	B	GPA	AF Power Ampl		2N301
	2N235A	B	GPA	AF Power Ampl		2N301
	2N236A	B	GPA	AF Power Ampl		2N301
	2N237	NA	GPA	AF Amplifier		2N220
	2N238	TI	GPA	AF Amplifier		2N217
	2N240	P	GPD	Switching		
	2N241	GE	GPA	AF Amplifier		2N217
	2N241A	GE	GNA	AF Amplifier		2N217
	2N242	S	GPA	AF Amplifier		2N301
	2N243	TI	SNG	AF Amplifier		
	2N244	TI	SNG	AF Amplifier		
	2N245	TI	SNG	AF Amplifier		
	2N246	TI	SNG	AF Amplifier		
	2N247	RCA	GPD	RF Amplifier	2N247	
	2N248	TI	GPG	RF Amplifier		2N247
	2N249	TI	GPA	AF Amplifier		2N270
	2N250	TI	GPA	AF Power Ampl		
	2N251	TI	GPA	AF Power Ampl		
	2N252	TI	GPA	Converter		2N140
	2N253	TI	GNG	455 Kc Ampl		2N139
	2N254	TI	GNG	455 Kc Ampl		2N139
	2N255	CBS	GPA	AF Power Ampl		
	2N256	CBS	GPA	AF Amplifier		
	2N257	CC	GPA	AF Power Ampl		
	2N260	CC	SPA	General Use		
	2N260A	CC	SPA	General Use		
	2N261	CC	SPA	General Use		
	2N262	CC	SPA	General Use		
	2N262A	CC	SPA	General Use		
	2N263	TI	SNG	Switching		
	2N265	GE	GPA	AF Amplifier		2N406
	2N266	GE	GPA	AF Amplifier		
	2N267	RCA●	GPD	RF Amplifier		2N247
	2N268	CC	GPA	Switching		2N301A
	2N269	RCA	GPA	Switching	2N269	
	2N270	RCA	GPA	AF Amplifier	2N270	
	2N272	CC	GPA	Switching		
	2N274	RCA	GPD	RF Amplifier	2N274	
	2N277	DEL	GPA	AF Power Ampl		
	2N278	DEL	GPA	AF Power Ampl		
	2N279	A	GPA	AF Amplifier		2N215

● RCA has discontinued this type

INTERCHANGEABILITY DIRECTORY

1	2	3	4	5	6	7
Type To Be Replaced				Class of Service	Replace by RCA Type*	Similar RCA Type‡
Mfr. Prefix	Basic Designation	Mfr.	Description			
	2N280	A	GPA	AF Amplifier		2N215
	2N281	A	GPA	AF Amplifier		
	2N282	A	GPA	AF Amplifier		
	2N283	A	GPA	AF Amplifier		2N215
	2N284	A	GPA	AF Amplifier		
	2N284A	A	GPA	AF Amplifier		
	2N285A	A	GPA	AF Power Ampl		
	2N290	DEL	GPA	AF Power Ampl		
	2N291	TI	GPA	AF Amplifier		2N270
	2N292	GE	GNA	AF Amplifier		2N410
	2N293	GE	GNA	AF Amplifier		2N410
	2N296	S	GPA	AF Power Ampl		2N301A
	2N297	CL	GPA	AF Power Ampl		2N301A
	2N299	P	GPS	RF Amplifier		
	2N300	P	GPS	RF Amplifier		
	2N302	RK	GPA	Switching		2N269
	2N303	RK	GPA	Switching		2N269
	2N306	S	GNA	General Use		
	2N307	S	GPA	AF Power Ampl		2N301
	2N307	TS	GPA	AF Power Ampl		2N301
	2N308	TI	GPA	RF Amplifier		2N247
	2N309	TI	GPA	RF Amplifier		2N247
	2N310	TI	GPA	AF Amplifier		2N247
	2N311	GT	GPA	Switching		2N404
	2N311	M	GPA	Switching		2N404
	2N312	GT	GNA	Switching		
	2N313	GE	GNA	AF Amplifier		
	2N314	GE	GNA	AF Amplifier		
	2N315	GT	GPA	Switching		2N404
	2N316	GT	GPA	Switching		2N404
	2N317	GT	GPA	Switching		2N404
	2N318	GT	GPA	⊕		
	2N319	GE	GPA	AF Amplifier		2N270
	2N320	GE	GPA	AF Amplifier		2N270
	2N321	GE	GPA	AF Amplifier		2N270
	2N322	GE	GPA	AF Amplifier		2N406
	2N323	GE	GPA	AF Amplifier		2N270
	2N324	GE	GPA	AF Amplifier		
	2N325	S	GPA	AF Power Ampl		2N301
	2N326	S	GNA	AF Power Ampl		2N301
	2N327	RK	SPA	Switching		
	2N328	RK	SPA	Switching		
	2N329	RK	SPA	Switching		
	2N330	RK	SPA	Switching		
	2N331	RCA	GPA	AF Amplifier	2N331	
	2N332	BOG	SNA	General Use		
	2N332	TI	SNA	General Use		
	2N332	TEC	SNA	General Use		
	2N333	BOG	SNA	General Use		
	2N333	TI	SNA	General Use		
	2N333	TEC	SNA	General Use		
	2N334	BOG	SNA	General Use		
	2N334	TI	SNA	General Use		
	2N334	TEC	SNA	General Use		
	2N335	BOG	SNA	General Use		
	2N335	TI	SNA	General Use		
	2N335	TEC	SNA	General Use		
	2N336	BOG	SNA	General Use		
	2N336	TI	SNA	General Use		
	2N337	TI	SNA	Switching		
	2N338	TI	SNA	Switching		
	2N339	TI	SNA	AF Power Ampl		
	2N340	TI	SNA	AF Power Ampl		
	2N341	TI	SNA	AF Power Ampl		
	2N342	TI	SNA	AF Power Ampl		
	2N343	TI	SNA	AF Power Ampl		
	2N344	P	GPS	IF-RF Ampl		2N274
	2N345	P	GPS	IF-RF Ampl		2N274
	2N346	P	GPS	IF-RF Ampl		2N384
	2N347	BOG	SNA	AF Power Ampl		
	2N348	BOG	SNA	AF Power Ampl		
	2N349	BOG	SNA	AF Power Ampl		
	2N352	P	GPA	AF Power Ampl		2N301
	2N353	P	GPA	AF Power Ampl		2N301
	2N354	P	SPA	General Use		
	2N355	P	SPA	Switching		
	2N356	GT	GNA	Switching		
	2N357	GT	GNA	Switching		
	2N358	GT	GNA	Switching		
	2N359	RK	GPA	AF Amplifier		
	2N360	RK	GPA	AF Amplifier		
	2N361	RK	GPA	AF Amplifier		
	2N362	RK	GPA	AF Amplifier		
	2N363	RK	GPA	AF Amplifier		
	2N370	RCA	GPA	RF Amplifier	2N370	
	2N371	RCA	GPA	Oscillator	2N371	
	2N372	RCA	GPA	RF Mixer	2N372	
	2N377	S	GNA	Switching		
	2N378	TS	GPA	Switching		2N301
	2N379	TS	GPA	Switching		
	2N380	TS	GPA	Switching		2N301A
	2N381	TS	GPA	AF Amplifier		2N270
	2N382	TS	GPA	AF Amplifier		2N270
	2N383	TS	GPA	AF Amplifier		
	2N384	RCA	GPA	VHF Amplifier	2N384	
	2N385	S	GNA	Switching		
	2N386	P	GPS	AF Power Ampl		2N301A
	2N387	P	GPS	AF Power Ampl		
	2N388	S	GNA	Switching		
	2N389	TI	SNG	AF Power Ampl		
	2N393	P	GPS	RF Amplifier		
	2N394	GE	GPA	Switching		2N404
	2N395	GE	GPA	Switching		2N404
	2N396	GE	GPA	Switching		2N404
	2N397	GE	GPA	Switching		2N404
	2N398	RCA	GPA	Switching	2N398	
	2N399	B	GPA	AF Power Ampl		
	2N400	B	GPA	AF Power Ampl		
	2N401	B	GPA	AF Power Ampl		
	2N402	WL	GPA	AF Amplifier		2N104
	2N403	WL	GPA	AF Amplifier		2N139
	2N404	RCA	GPA	Switching	2N404	
	2N405	RCA	GPA	AF Driver	2N405	
	2N406	RCA	GPA	AF Driver	2N406	
	2N407	RCA	GPA	AF Amplifier	2N407	
	2N408	RCA	GPA	AF Amplifier	2N408	
	2N409	RCA	GPA	IF Amplifier	2N409	
	2N410	RCA	GPA	IF Amplifier	2N410	
	2N411	RCA	GPA	Converter	2N411	
	2N412	RCA	GPA	Converter	2N412	
	2N413	RK	GPA	IF Amplifier		2N218
	2N413A	RK	GPA	IF Amplifier		2N218
	2N414	RK	GPA	IF Amplifier		2N218
	2N414A	RK	GPA	IF Amplifier		2N218
	2N415	RK	GPA	RF Amplifier		2N247
	2N415A	RK	GPA	RF Amplifier		2N247
	2N416	RK	GPA	RF Amplifier		2N247
	2N417	RK	GPA	RF Amplifier		
	2N419	B	GPA	Power Switch		
	2N420	B	GPA	Power Switch		
	2N421	B	GPA	Power Switch		
	2N422	RK	GPA	AF Amplifier		
	2N424	TI	SNA	AF Power Ampl		
	2N425	RK	GPA	Switching		2N404
	2N426	RK	GPA	Switching		2N404
	2N427	RK	GPA	Switching		2N404
	2N428	RK	GPA	Switching		2N404
	2N430	GE	SNA	Switching		
	2N431	GE	SNA	RF Amplifier		
	2N432	GE	SNA	RF Amplifier		
	2N433	GE	SNA	RF Amplifier		
	2N434	GE	SNA	RF Amplifier		
	2N438	CBS	GNA	IF Amplifier		
	2N439	CBS	GNA	IF Amplifier		
	2N440	CBS	GNA	RF Amplifier		
	2N441	DEL	GPA	AF Power Ampl		
	2N442	DEL	GPA	AF Power Ampl		
	2N443	DEL	GPA	AF Power Ampl		
	2N448	GE	GNA	RF Amplifier		
	2N449	GE	GNA	RF Amplifier		
	2N450	GE	GNA	RF Amplifier		
	2N451	GE	GNA	AF Power Ampl		
H	3	MH	GPA	AF Power Ampl		
H	3A	MH	GPA	AF Power Ampl		
	3N22	WE	GNG	RF Amplifier		
	3N23	BOG	GNG	RF Amplifier		
	3N23A	BOG	GNG	RF Amplifier		
	3N23B	BOG	GNG	RF Amplifier		
	3N23C	BOG	GNG	RF Amplifier		
	3N25	TI	GPG	VHF Amp		
	3N26	TI	SNG	RF Amplifier		
	3N27	TI	SNG	RF Amplifier		
	3N29	GE	GNA	RF Amplifier		
	3N30	GE	GNA	RF Amplifier		
	3N31	GE	GNA	RF Amplifier		
	3N32	TI	SNG	RF Amplifier		
	3N33	TI	SNG	Video Amplifier		
	3N34	TI	SNG	Video Amplifier		
H	4A	MH	GPA	AF Power Ampl		
	4JD1B2	GE	GPA	Switching		
	4JD1B3	GE	GPA	Switching		
	4JD1B4	GE	GPA	Switching		
	4JD4A2	GE	GNG	RF Amplifier		
	4JD4A3	GE	GNG	Switching		
	4JD4A4	GE	GNG	RF Amplifier		
	4JD4A5	GE	GNG	RF Amplifier		
H	5	MH	GPA	AF Power Ampl		
	5A	SPR	GC	Switching		
	5B	CC	SD	⊕		
	5C	CC	SD	⊕		
H	6	MH	GPA	AF Power Ampl		
SS	6	SS	SD	⊕		
H	7	MH	GPA	AF Power Ampl		
	8D	SPR	GPA	AF Amplifier		2N218
	8E	SPR	GPA	AF Amplifier		2N218
	8F	SPR	GPA	AF Amplifier		2N218
H	10	MH	GPA	AF Power Ampl		
	10A	CC	SD	⊕		
	10A	SPR	GPA	AF Amplifier		2N270
	10B	CC	SD	⊕		
	10B	SPR	GPA	AF Amplifier		2N270
	10C	SPR	GPA	AF Amplifier		2N270
	11A	CC	SD	⊕		
	11B	CC	SD	⊕		
ZJ	12	GE	SNG	AF Amplifier		
MN	13A	M	GPA	AF Amplifier		
MN	13B	M	GPA	AF Amplifier		
MN	13C	M	GPA	AF Amplifier		
ZJ	13	GE	GNG	AF Amplifier		2N109
GT	14	GT	GPA	AF Amplifier		2N109
RR	14	RR	GPA	AF Amplifier		
ZJ	14	GE	SD	Switching		
GT	14H	GT	GPA	AF Amplifier		2N105
OC	16	A	GPA	AF Power Ampl		2N301
ZJ	16	GE	SPA	AF Power Ampl		
	17A	CC	SD	⊕		
MN	19	M	GPA	Switching		
GT	20	GT	GPA	AF Amplifier		2N109
RR	20	RR	GPA	AF Amplifier		
GT	20H	GT	GPA	AF Amplifier		2N105
MN	21	M	GPA	AF Power Ampl		
RR	21	RR	GPA	AF Amplifier		
GT	24	GT	GPA	AF Amplifier		
MN	24	M	GPA	AF Power Ampl		2N301
MN	25	M	GPA	AF Power Ampl		2N301
MN	26	M	GPA	AF Power Ampl		2N301
MN	28	M	GPA	AF Power Ampl		
MN	29	M	GPA	AF Power Ampl		
GT	31	GT	GPA	AF Amplifier		
RR	34	RR	GPA	AF Amplifier		
T	34A	NU	GPA	AF Amplifier		2N105
T	34B	NU	GPA	AF Amplifier		2N105
T	34C	NU	GPA	AF Amplifier		2N105
T	34D	NU	GPA	AF Amplifier		2N109
T	34E	NU	GPA	AF Amplifier		2N109
T	34F	NU	GPA	AF Amplifier		2N109
GT	34HV	GT	GPA	Switching		
GT	34S	GT	GPA	Detector		
GT	38	GT	GPA	AF Amplifier		2N77
RR	38	RR	GPA	AF Amplifier		
OC	44	A	GPA	RF Amplifier		2N247
OC	45	A	GPA	RF Amplifier		2N247
OC	50	A	GC	Oscillator		
OC	51	A	GC	Switching		
OC	65	A	GPA	AF Amplifier		2N105
GT	66	GT	GPA	⊕		
OC	66	A	GPA	AF Amplifier		2N105
RR	66	RR	SD	⊕		
OC	70	A	GPA	AF Amplifier		2N77
OC	71	A	GPA	AF Amplifier		2N77
ZJ	71	GE	GNG	RF Amplifier		2N247
OC	72	A	GPA	AF Amplifier		2N109
ZJ	72	GE	GNG	VHF Amplifier		2N247
OC	73	A	GPA	AF Amplifier		
ZJ	73	GE	GNG	RF Amplifier		2N247
GT	74	GT	GPA	AF Amplifier		
GT	75	GT	GPA	AF Amplifier		
OC	76	A	GPA	Switching		
GT	81	GT	GPA	AF Amplifier		2N109
GT	81H	GT	GPA	AF Amplifier		2N105
GT	81HS	GT	GPA	AF Amplifier		
GT	82	GT	GPA	Switching		
GT	83	GT	GPA	Switching		
GT	87	GT	GPA	Switching		
GT	88	GT	GPA	Switching		
DR	100	TS	GPA	AF Amplifier		
DR	101	TS	GPA	AF Amplifier		
DR	102	TS	GPA	AF Amplifier		
GT	109	GT	GPA	AF Amplifier	2N109	
GT	122	GT	GPA	Switching		2N269
GT	123	GT	GPA	Switching		
RR	125	RR	GPA	AF Amplifier		
DR	126	TS	GPA	AF Amplifier		2N105
DR	128	TS	GPA	AF Amplifier		2N105
DR	129	TS	GPA	General Use		
DR	130	TS	GPA	General Use		
DR	131	TS	GPA	General Use		
DR	132	TS	GPA	General Use		
DR	149	TS	GPA	General Use		
DR	150	TS	GPA	AF Power Ampl		
GT	153	GT	GPA	Switching		
DR	154	TS	GPA	General Use		
DR	155	TS	GPA	General Use		
TS	161	TS	GPA	AF Amp		2N109
TS	162	TS	GPA	General Use		2N104
TS	163	TS	GPA	AF Amplifier		2N104
TS	164	TS	GPA	AF Amplifier		2N104
TS	165	TS	GPA	AF Amplifier		2N109
TS	166	TS	GPA	AF Amplifier		2N175
GT	167	GT	GPA	Switching		
TS	176	TS	GPA	AF Power Ampl		
	200	TI	GNG	General Use		
	201	TI	GNG	General Use		
	202	TI	GNG	General Use		
	206	TI	GNG	AF Amplifier		2N77
	207	TI	GNG	AF Amplifier		2N77
	208	TI	GNG	AF Amplifier		2N77
GT	210	GT	GPA	Switching		
	210	TI	GNG	AF Amplifier		
	220	TI	GNG	IF Amplifier		
	221	TI	GNG	IF Amplifier		
	222	TI	GNG	IF Amplifier		2N139
GT	222	GT	GPA	General Use		2N104
	223	TI	GNG	Converter		2N140
	224	TI	GNG	IF Amplifier		
	225	TI	GNG	IF Amplifier		2N139
	227	TI	GNG	IF Amplifier		
	228	TI	GNG	Converter		2N140
	229	TI	GNG	Detector		
	234	TI	GPA	IF Amplifier		
	235	TI	GPA	Converter		
	300	TI	GPA	AF Amplifier		2N109
	301	TI	GPA	AF Amplifier		2N109
	302	TI	GPA	AF Amplifier		2N109
	310	TI	GPA	AF Amplifier		2N109
RD	317	GPC	SNG	RF Amplifier		
RD	317A	GPC	SNG	RF Amplifier		
	320	S	SPA	AF Amplifier		
RD	320	GPC	SNG	RF Amplifier		
RD	321A	GPC	SNG	RF Amplifier		
RD	322	GPC	SNG	RF Amplifier		
RD	324	GPC	SNG	RF Amplifier		
RD	324A	GPC	SNG	RF Amplifier		
	330	S	GPA	AF Amplifier		
	340	S	GPA	AF Amplifier		

⊕ Phototransistor

INTERCHANGEABILITY DIRECTORY

1	2	3	4	5	6	7
Type To Be Replaced				Class of Service	Replace by RCA Type*	Similar RCA Type†
Mfr. Prefix	Basic Designation	Mfr.	Description			
	350	TI	GPA	AF Amplifier		2N109
	352	TI	GPA	AF Amplifier		2N109
	353	TI	GPA	AF Amplifier		2N109
	355	TI	GPA	AF Power Ampl		
	501	TI	GPG	VHF Amplifier		
TS	612	TS	GPA	AF Power Ampl		
TS	613	TS	GPA	AF Amplifier		
TS	615	TS	GPA	AF Amplifier		
TS	616	TS	GPA	AF Amplifier		
TS	617	TS	GPA	AF Amplifier		
TS	618	TS	GPA	AF Amplifier		
TS	619	TS	GPA	AF Amplifier		
TS	620	TS	GPA	AF Amplifier		2N139
TS	621	TS	GPA	AF Amplifier		2N140
TS	630	TS	GPA	AF Amplifier		
	700	TI	GNG	AF Amplifier		
CK	721	RK	GPA	AF Amplifier		2N104
CK	722	RK	GPA	AF Amplifier		2N104
CK	725	RK	GPA	AF Amplifier		2N104
CK	727	RK	GPA	AF Amplifier		2N104
CK	751	RK	GPA	AF Amplifier		2N109
CK	754	RK	GPA	AF Amplifier		
CK	758	RK	GPA	AF Amplifier		
CK	759	RK	GPA	RF Amplifier		2N139
GT	759	GT	GPA	Switching		2N139
CK	760	RK	GPA	RF Amplifier		2N139
GT	760	GT	GPA	455 Kc Ampl		2N139
CK	761	RK	GPA	RF Amplifier	2N139	
GT	761	GT	GPA	455 Kc Ampl	2N139	
CK	762	RK	GPA	Converter	2N140	
GT	762	GT	GPA	Converter	2N140	
GT	763	GT	GPA	RF Amplifier		
GT	764	GT	GPA	Switching		
CK	766	RK	GPA	RF Amplifier		2N140
CK	766A	RK	GPA	RF Amplifier		2N140
CK	768	RK	GPA	Converter		
CK	790	RK	GPA	AF Amplifier		
CK	791	RK	GPA	AF Amplifier		
CK	793	RK	GPA	AF Amplifier		
	800	TI	GNG	⊕		
	830	TI	GNG	Converter		2N140
CK	870	RK	GPA	AF Amplifier		
CK	871	RK	GPA	AF Amplifier		
GT	903	GT	GNA	Switching		
	903	TI	SNG	AF Amplifier		
	904	TI	SNG	AF Amplifier		
GT	904	GT	GNA	Switching		
	904A	TI	SNG	AF Amplifier		
GT	905	GT	GNA	Switching		
	905	TI	SNG	AF Amplifier		
	910	TI	SNA	General		
	925	TI	SNG	IF-RF Ampl		
	926	TI	SNG	IF-RF Ampl		
GT	947	GT	GNA	Switching		
GT	948	GT	GNA	Switching		
GT	949	GT	GNA	Switching		
	951	TI	SNG	AF Power Ampl		
	952	TI	SNG	AF Power Ampl		
	953	TI	SNG	AF Power Ampl		
	970	TI	SNG	AF Power Ampl		
CTP	1002	CC	GPA	AF Power Ampl		
CTP	1003	CC	GPA	AF Power Ampl		
CTP	1004	CC	GPA	AF Power Ampl		
CTP	1005	CC	GPA	AF Power Ampl		
CTP	1006	CC	GPA	AF Power Ampl		
	1032	CC	GPA	AF Amplifier		2N109
	1033	CC	GPA	AF Amplifier		2N109
	1034	CC	GPA	AF Amplifier		2N109
	1035	CC	GPA	AF Amplifier		2N109
	1036	CC	GPA	AF Amplifier		2N109
CTP	1102	CC	GPA	AF Power Ampl		
CTP	1103	CC	GPA	AF Power Ampl		
CTP	1104	CC	GPA	AF Power Ampl		
CTP	1108	CC	GPA	AF Power Ampl		
CTP	1109	CC	GPA	AF Power Ampl		
CTP	1111	CC	GPA	AF Power Ampl		
CTP	1112	CC	GPA	AF Power Ampl		
CTP	1117	CC	GPA	AF Power Ampl		
	1320	CC	GPA	AF Amplifier		2N109
	1330	CC	GPA	AF Amplifier		2N109
	1340	CC	GPA	AF Amplifier		2N109
	1350	CC	GPA	AF Amplifier		2N109
	1360	CC	GPA	AF Amplifier		2N109
	1390	CC	GPA	IF-RF Ampl		2N139
	1400	CC	GPA	IF-RF Ampl		2N139
	1416	CC	GPA	IF-RF Ampl		2N139
RD	2517A	BOG	GNG	General Use		
RD	2518A	BOG	GNG	Switching		
RD	2520A	BOG	GNG	RF Amplifier		
RD	2521A	BOG	GNG	Switching		
RD	2523A	BOG	GNG	Switching		
RD	2525A	BOG	GNG	AF Amplifier		
HA	5001	HA	GNA	AF Amplifier		
HA	5002	HA	GNA	AF Amplifier		
HA	5003	HA	GNA	AF Amplifier		
HA	5005	HA	GNA	General Use		
HA	5009	HA	GNA	General Use		
HA	5011	HA	GNA	AF Amplifier		
HA	5012	HA	GNA	AF Amplifier		
HA	5014	HA	GNA	AF Amplifier		
HA	5016	HA	GNA	Switching		
HA	5020	HA	GNA	Switching		
HA	5021	HA	GNA	Switching		
HA	7501	HA	SPA	AF Amplifier		
	9052	TI	SNG	AF Amplifier		
	10101	WL	GPA	Switching		
	10123	WL	GPA	Switching		
	A0	NA	GC	AF Amplifier		
	A1	NA	GC	AF Amplifier		
	A2	NA	GC	AF Amplifier		2N274
	AO1	P	GPS	AF Amplifier		2N218
	CQ1	NA	GPA	AF Amplifier		
	FS2500	BOG	GNG	General Use		
	G11	GE	GC	Oscillator		
	G11A	GE	GC	Oscillator		
	GA52609	WE	GNG	AF Amplifier		
	GA52829	WE	GPA	AF Amplifier		
	GA52830	WE	GPA	Switching		
	GA52837	WE	GC	Switching		
	GA52996	WE	GC	Switching		
	GFT20	N	GPA	AF Amplifier		2N109
	GFT21	N	GPA	AF Amplifier		
	GFT26	N	GPA	AF Power Ampl		2N301
	GFT32	N	GPA	AF Amplifier		2N270
	GFT44	N	GPA	RF Amplifier		2N218
	GFT45	N	GPA	RF Amplifier		
	GFT26	N	GPA	AF Power Ampl		
	GT547A	S	GNA	IF-RF Ampl		
	GT547B	S	GNA	Switching		
	HA1	CBS	GPA	AF Amplifier		2N77
	HA1	NA	GPA	AF Amplifier		2N77
	HA2	CBS	GPA	AF Amplifier		2N77
	HA3	CBS	GPA	AF Amplifier		2N77
	HA8	CBS	GPA	AF Amplifier		2N105
	HA9	CBS	GPA	AF Amplifier		2N105
	HA10	CBS	GPA	AF Amplifier		2N105
	HC1	CBS	GPA	Switching		
	HD197	CBS	GPA	AF Power Ampl		
	HF1	NA	GPA	RF Amplifier		
	HS1	NA	GPA	Switching		
	HS2	NA	GPA	Switching		
	HS3	NA	GPA	Switching		2N269
	HS4	NA	GPA	Switching		2N269
	IF1	NA	GPA	IF Amplifier		
	IF3	NA	GPA	IF Amplifier		
	J1	NA	GPA	AF Amplifier		2N109
	J2	NA	GPA	AF Amplifier		2N109
	J3	NA	GPA	AF Amplifier		2N109
	JP1	NA	GPA	AF Amplifier		2N109
	L5108	P	GPS	RF Amplifier		2N247
	L5121	P	GPS	Switching		2N247
	L5122	P	GPS	Switching		2N247
	N119	TI	SNG	AF Amplifier		
	NPN3	GPC	GNG	AF Amplifier		
	OC32	N	GPA	AF Amplifier		2N109
	OC33	N	GPA	AF Amplifier		2N109
	OC34	N	GPA	AF Amplifier		2N109
	OC360	N	GPA	AF Amplifier		
	S0	NA	GC	Switching		
	S1	NA	GC	Switching		
	S2	NA	GC	Switching		
	SB100	P	GPS	IF Amplifier		2N247
	SB100	SPR	GPS	IF Amplifier		2N247
	SB101	P	GPS	RF Amp		
	SB101	SPR	GPS	RF Amp		
	SB102	SPR	GPS	RF Amplifier		
	SB102	SPR	GPS	RF Amplifier		
	SB103	P	GPS	IF-RF Ampl		
	SB103	SPR	GPS	IF-RF Ampl		
	SB5122	SPR	GPS	Switching		
	ST10	TEC	SNA	AF Amplifier		
	ST11	TEC	SNA	AF Amplifier		
	ST12	TEC	SNA	AF Amplifier		
	ST13	TEC	SNA	AF Amplifier		
	ST30	TEC	SNA	AF Amplifier		
	ST31	TEC	SNA	AF Amplifier		
	ST32	TEC	SNA	AF Amplifier		
	ST33	TEC	SNA	AF Amplifier		
	ST40	TEC	SNA	AF Amplifier		
	ST41	TEC	SNA	AF Amplifier		
	ST42	TEC	SNG	RF Amplifier		
	T1000	P	GPA	RF Amplifier		
	T1001	P	GPA	AF Power Ampl		
	T1040	P	GPA	AF Power Ampl		2N301
	T1041	P	GPA	AF Power Ampl		2N301
	T1050	P	GN	AF Amplifier		
	T1164	P	GPA	Switching		2N381
	T1166	P	GPA	Switching		2N381
	X2	TI	GNG	AF Power Ampl		
	X15	TI	SNG	AF Amplifier		
	X30A	GPC	SNA	General Use		
	X31A	GPC	SNA	General Use		
	X32A	GPC	SNA	General Use		
	X78	CC	GPA	AF Power Ampl		
	X107	CC	GPA	AF Power Ampl		
	X113	B	GPA	Switching		
	X114	B	GPA	AF Power Ampl		
	X120	CC	GPA	AF Power Ampl		
	X133	B	GPA	Switching		
	X134	B	GPA	Switching		
	X137	B	GPA	Switching		
	X140	B	GPA	AF Power Ampl		
	X145	B	GPA	AF Power Ampl		
RD	X300	GPC	GNG	RF Amplifier		
RD	X300A	GPC	GNG	RF Amplifier		
RD	X301	GPC	GNG	RF Amplifier		
RD	X302	GPC	GNG	RF Amplifier		
	XD5081	WL	GPA	AF Amplifier		
	XD5082	WL	GPA	AF Amplifier		
	XH10	MH	GPA	AF Power Ampl		

⊕ Phototransistor

MANUFACTURER'S NAME	ADDRESS	TYPES
1. Amperex Electronic Corporation	230 Duffy Ave., Hicksville, New York	Germanium, low & hi power.
2. Bendix Aviation Corporation	201 Westwood Ave., Long Branch, N. J.	Germanium, low & hi power.
3. CBS–Hytron	100 Endicott St., Danvers, Mass.	Germanium, low & hi power.
4. Clevite Transistor Products	241-257 Crescent St., Waltham 54, Massachusetts	Germanium, low & hi power.
5. Delco Radio (GM)	700 E. Firmin St., Kokomo, Indiana	Germanium hi power types.
6. Fretco, Inc.	406 N. Craig St., Pittsburgh 13, Pa.	Germanium & silicon.
7. General Electric	1224 West Genesee St., Syracuse, New York	Germanium & silicon; silicon hi power; tetrodes.
8. General Transistor Corp.	91-27 138th Place, Jamaica 35, N. Y.	Germanium & silicon; phototransistors.
9. Hughes Products	International Airport Station, Los Angeles 45, California	Germanium & silicon.
10. Industro Transistor Corp.	35-10 36th Ave., Long Island City 6, New York	Germanium low power.
11. International Electronics Corp.	81 Spring St., New York 12, N. Y.	Germanium, low & hi power, phototransistors.
12. Lansdale Tube Co. (PHILCO)	Church Rd., Lansdale, Pa.	Germanium, low & hi power, silicon.
13. Minneapolis-Honeywell	2753 Fourth Ave., S., Minneapolis 8, Minnesota	Germanium, low & hi power, hi power tetrodes.
14. Motorola, Inc.	5005 E. McDowell Rd., Phoenix, Ariz.	Germanium, low & hi power, silicon.
15. Nucleonic Products Co.	1601 Grande Vista Ave., Los Angeles 23, California	Silicon types.

(Continued on next page)

TABLE 10-F: TRANSISTOR MANUFACTURERS.

MANUFACTURER'S NAME	ADDRESS	TYPES
16. RCA	Somerville, New Jersey	Germanium, & Silicon, low & hi power.
17. Radio Development & Research Corp.	100 Pennsylvania Ave., Paterson, N.J.	Germanium & silicon, tetrodes.
18. Raytheon Mfg. Co.	55 Chapel Street, Newton 58, Mass.	Germanium & silicon.
19. Sperry Semiconductor	Great Neck, N. Y.	Silicon types.
20. Sprague Electric Co.	125 Marshall St., North Adams, Mass.	Germanium & silicon.
21. Sylvania Electric Products, Inc.	100 Sylvan Road, Woburn, Mass.	All types.
22. Texas Instruments, Inc.	6000 Lemmon Ave., Dallas, Texas	All types.
23. Transitron Electronic Corp.	168 Albion St., Wakefield, Mass.	Germanium & silicon, low & hi power.
24. Tung-Sol Electric, Inc.	95 Eight Ave., Newark 4, N. J.	Germanium, low & hi power.
25. Westinghouse Electric Corp.	P. O. Box 868, Pittsburgh 30, Pa.	Germanium & silicon, low & hi power.

identical otherwise) are furnished through transformer T1's center-tapped secondary, with the stage's amplified output signal supplied to its eventual load through transformer T2, which is equipped with a center-tapped primary. Note that *both* the input devices and output loads have common connection points (the center taps). Base bias current is supplied to both transistors simultaneously from a resistive voltage-divider (R-47), with unbypassed emitter resistors used (8.2) to stabilize circuit operation. For minimum distortion and highest operating efficiency, a push-pull amplifier should be supplied with input signals of equal amplitude, and each amplifying device should provide *equal gain,* thus permitting *balanced* operation. In practical transistor circuits, this is often achieved by carefully selecting transistors which have identical operating characteristics and using them in *matched pairs.* Although a common-emitter configuration is shown in Fig. 10-6(b), push-pull common-collector or common-base circuits may be employed if desired.

BASIC AMPLIFIER CHARACTERISTICS
(Junction Transistors)

CIRCUIT CONFIGURATION	INPUT IMPEDANCE	OUTPUT IMPEDANCE	VOLTAGE GAIN	POWER GAIN	PHASE
Common-Emitter* (Grounded-Emitter)	Moderate 500 to 5K ohms	Moderate to high 5K to 50K ohms	High	High	Reversal
Common-Base (Grounded-Base)	Very low to mod. 25 to 250 ohms	High 50K to 500K ohms	Moderate	Moderate to High	In Phase
Common-Collector** (Grounded-Collector)	High 5K to 1 Megohm	Moderate to low 10K to 100 ohms	Low (less than 1.0)	Low	In Phase

NOTES: *Multi-watt power transistors have low input and output impedances. A Class A single-ended amplifier may have an input impedance of 10 ohms, an output impedance of 30 ohms (typical). A Class B push-pull amplifier may have an input impedance of 100 ohms, an output impedance of 50 ohms.

**Analogous to the vacuum-tube "cathode follower," this circuit arrangement is often called an "emitter-follower."

TABLE 10-G: General characteristics of basic transistor circuit configurations. Refer to Fig. 10-5.

There is one other factor affecting an amplifier stage's operating characteristics, regardless of transistor type, circuit configuration, actual application, and whether single-ended or push-pull arrangements are used. This is the relationship between its operating (fixed) bias currents and the amplitude of the signal applied to its input circuit. In practice, this relationship is identified by the amplifier's *Class* of operation. There are four basic Classes.

In a *Class A* stage, operating bias is such that a fixed current flows through the output load at all times, with this current varied up and down about its average value by the input signal. Thus, the entire cycle of the applied signal affects output current, and the output signal is an exact (but amplified) duplicate of the input. Since the output current can fluctuate to a maximum of twice its mean or steady-state value or, as a minimum, can be reduced to zero, the output power of a Class A stage can never be more than half the (D.C.) power supplied, and such an amplifier has a maximum efficiency of 50%. The Class A amplifier is the most common type encountered in transistor work. It has the least inherent distortion of the four basic Classes.

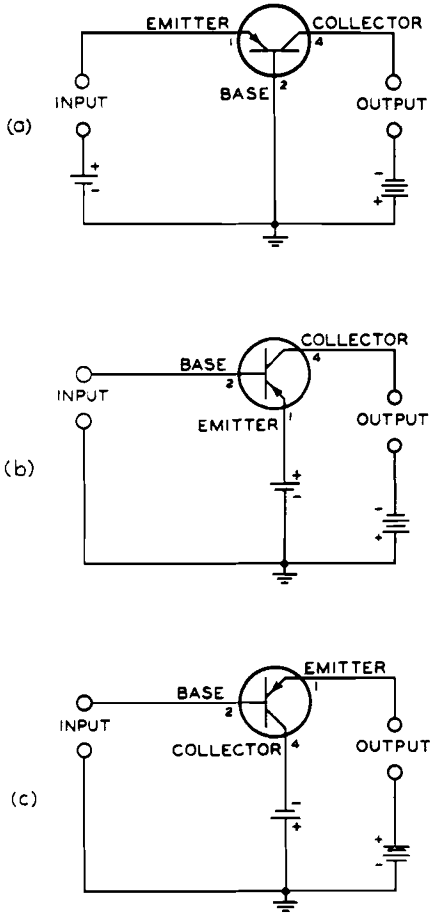

Fig. 10-5: Basic transistor circuit configurations . . . (a) Common-base (or "Grounded-base"), (b) Common-emitter (or "Grounded-emitter"), and (c) Common-collector (also, "Grounded-collector" or "Emitter-follower').

In a *Class AB* stage, operating bias is such that a fixed current flows through the output load at all times, but the current is much lower than the maximum that can be developed through the load by an input signal. Thus, more than half, but less than the full cycle of the applied signal affects output current. The output signal of a single-ended Class AB stage, then, is highly distorted, and approximates the input signal with part of one half-cycle "clipped" off. As a result, Class AB amplifiers are used only in push-pull arrangements when distortion-free operation is needed (as in audio amplifiers); here, of course, the output signal waveform is restored to duplicate the input signal by the combining action of the two amplifiers. In practice, a Class AB transistor stage is one operated with a very low fixed bias current. The Class AB stage is more efficient than a Class A stage since the output load current can be more than twice its steady-state (no signal applied) value.

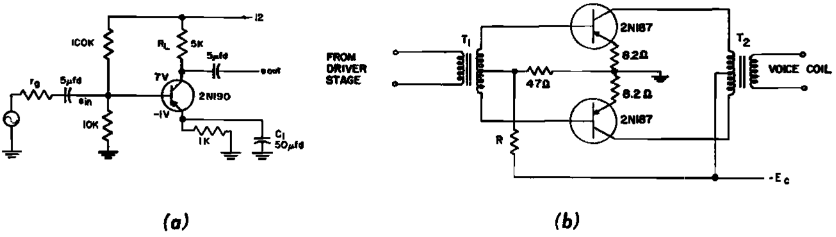

(a) (b)

Fig. 10-6: Transistor amplifier circuits . . . (a) Single-ended, (b) Push-pull.

A *Class B* stage is similar to a Class AB amplifier, except that zero bias is used, and current flows through the output load only during half of the input signal. The output signal, then, approximates only a half-cycle of the input (its waveshape approximates that of the input signal as it would appear if passed through a half-wave rectifier). Class B stages, of course, are more efficient than Class AB, but, like Class AB, are used only in push-pull arrangements if minimum distortion is needed.

When a push-pull transistor amplifier is operated with zero bias, considerable distortion can occur at the cross-over point where first one, then the other, of the two transistors, takes over. One, of course, handles positive-going half-cycles, the other negative-going half-cycles of the applied input signal. To minimize this *cross-over distortion,* most push-pull transistorized audio amplifiers are operated with a small bias as *Class AB* stages but, nonetheless, are called *Class B* amplifiers by convention. To avoid confusion, this conventional practice has been observed in describing circuits in earlier Sections.

The final mode of amplifier operation is the *Class C* stage. Here, a *reverse* bias is applied to the transistor, and output current can flow only during that portion of the applied signal when input signal amplitude exceeds the fixed bias. Thus load current flows for less than half of the operating cycle. Class C stages are highly efficient, but are suitable only for use as pulse amplifiers, clippers, sync separaters,

CLASSES OF AMPLIFIER OPERATION

CLASS	BIAS USED	EFFICIENCY	GENERAL APPLICATION
A	Moderate	50% (Maximum)	General purpose audio and R.F. amplification; instrument amplifiers; low and medium power output; may be used single-ended or push-pull. Steady (D.C.) load current.
AB	Low	60-70%	R.F. or audio, but used push-pull only in audio or modulated R.F. circuits; moderate to high power output; may be used single-ended in pulse amplifiers. Current through load for more than half, but less than full, operating cycle.
B	Zero	78% (Maximum)	Application is same as Class AB amplifiers; generally used push-pull. Current through load for half of operating cycle.
C	Reverse	90-98%	Used as R.F. amplifier, clipper, or pulse amplifier; may be used push-pull or single-ended; not used as audio amplifier; moderate to high power output. Current through load for appreciably less than half of operating cycle.

NOTES:
1. Transistor oscillators are generally Class A or Class AB amplifiers.
2. Efficiency figures given as "Maximum" are theoretically ideal, and are not obtained in practical circuits.
3. Actual power output depends on type of transistor used and operating parameters. A Class A single-ended amplifier using a multi-watt transistor may deliver more output power than a push-pull Class B amplifier using low power transistors. For transistors of the same type, however, Class AB and Class B amplifiers will deliver greater output than Class A circuits.

TABLE 10-H: General characteristics of transistor amplifiers based on Class of operation.

or R.F. amplifiers using a tuned output load (which serves to restore signal waveform by its resonant "flywheel" action).

All four Classes of transistor amplifier operation are described and summarized in Table 10-H.

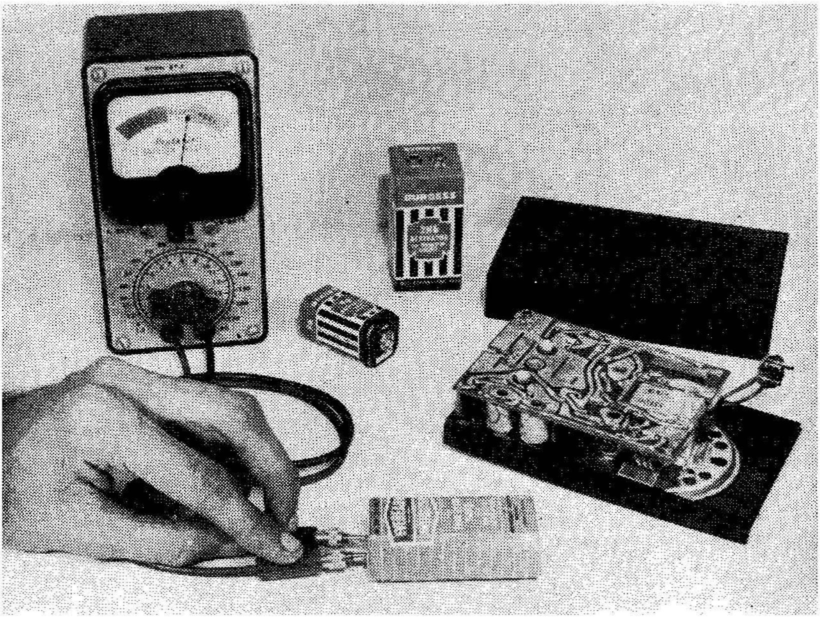

Fig. 10-7: Using a Battery Tester to check a small transistor battery. If a suitable tester is not available, batteries should be checked with a Voltmeter UNDER LOAD. If in doubt, try a substitute unit known to be in good condition.

COMPONENTS

Except for their physical size and actual electrical specifications, all components used in transistorized equipment correspond exactly to the components found in tube-operated gear. Paper, ceramic, mica, and electrolytic capacitors are used in both, as are carbon and wire-wound resistors and potentiometers. In transistorized equipment, however, the low operating voltages employed and relatively low circuit impedances call for the use of low-voltage capacitors having higher capacity values than is customarily encountered in tube circuits. Thus, a typical transistor circuit capacitor may have a rated D.C. working voltage of only 3.0 to, say, 15 or 20 volts. These low working voltages necessitate care in making Ohmmeter checks for "leakage," particularly where electrolytic capacitors are used, for the Ohmmeter's built-in voltage might easily exceed the component's rated value. Continuing, transistor R.F. and I.F. bypass units may have typical values of from 0.01 Mfd. to 0.1 Mfd., as opposed to values of, say, 0.0005 Mfd. to 0.002 Mfd. in tube circuitry. Audio coupling capacitors may have values of from 0.5 Mfd. to 30 or 50 Mfd., with electrolytics used in these circuits; in contrast, tube audio circuit coupling units are generally paper or ceramic capacitors, with values ranging from 0.002 Mfd. to a high of about 0.1 Mfd. Bypass and filter capacitors, too, may have relatively large values in transistor circuits, with some units running as high as 1,000 to 2,000 Mfd. Low wattage (one-tenth to one-half watt) resistors are used in most low-power transistors circuits, but 5 or 10 watt units may be found where high power types are employed; here, however, resistance values will run much lower than are found in tube circuits, with values of *under one ohm* not uncommon. Transistor R.F. and I.F. coils have electrical characteristics similar to their vacuum tube counterparts, but, since they are often subminiaturized, may have somewhat higher distributed capacities and lower operating "Qs."

BATTERIES. Almost all transistorized equipment is designed for battery operation. Four basic types of batteries are used . . . (a) familiar *zinc-carbon* units, (b) *alkaline-cell batteries,* (c) *mercury batteries,* and (d) *nickel-cadmium batteries.* Of these, the zinc-carbon and alkaline-cell types are basically similar, and have similar output voltages per cell. Mercury batteries are more expensive than either of the first two types, but have a much longer operating life, with the advantage that they maintain an almost constant output voltage until the end of their service life; the output voltage of a zinc-carbon cell, of course, drops as the unit is gradually exhausted. Care must be taken *to identify the type of battery used* in a particular piece of equipment to avoid errors in making voltage readings and when installing replacements. In a mercury or nickel-cadmium battery, the output *voltage per cell* is less than in zinc-carbon units; a mercury battery has a "no-load" initial output of about 1.3 volts/cell, as opposed to an output of better than 1.5 volts/cell for zinc-carbon units. This difference becomes more pronounced where multi-cell batteries are considered, with a 3-cell mercury type having an output of 4.0 volts versus better than 4.5 volts for a 3-cell zinc-carbon type. Further, output connections may differ. For example, the *outer shell of a mercury cell* is its *positive* terminal, with its "button" the negative terminal. In the familiar zinc-carbon cell used in flashlights, the outer shell is its negative terminal, with the button electrode positive. The electrode connections of alkaline-cell and nickel-cadmium units are similar to those of the zinc-carbon cell. Nickel-cadmium batteries are rechargeable and may be found in many portable receivers and, often, in transistorized TV sets. To avoid possible

Catalog Number	Volts	Overall Dimensions L	W	H	Unit Package Quantity	Weight of Unit Package in Pounds	Terminal Type	INTERCHANGEABLE WITH National Carbon	Other	NEDA
ACTIVATORS FOR TRANSISTOR CIRCUITS									R.O.V.	
2U6	9	1	39/64	1 7/8	1	1 oz.	Snap Type	216	1604	1604
A4	6	1 9/32	1 9/32	2 11/32	1	1/4	Flat Contacts	---	----	----
NE	1 1/2	7/16		1 11/64	48	4/5	Flashlight	---	----	----
XX9	9, 13 1/2	1 9/32	29/32	2 17/32	1	2 ozs.	Socket	239	1900	1900
D6	9	2 9/16	2	3 5/32	1	1	Snap Type	276	1603	1603
2N6	9	1 3/8	1 3/8	2 3/4	1	3/10	Snap Type	246	1602	1602
4D4	6	2 17/32	2	7 5/16	1	2 1/2	Snap Type	274	----	1400
930	1 1/2	35/64 (diam.)		1 31/32	12	1/2	Flashlight	1015E	----	----
130	1 1/2	63/64 (diam.)		1 15/16	12	1 1/4	Flashlight	635	----	----
230	1 1/2	1 21/64 (diam.)		2 25/64	48	1 1/2	Flashlight	A100	----	----
D6PI	3, 6, 9	2 19/32	1 7/16	7 27/32	1	1 3/8	Socket	2506	1601	1601
C6X	9	2 5/16	1 1/32	6 1/16	1	5/8	Snap Type	2356	----	----
P6	9	31/32	31/32	1 31/32	1	3/8	Snap Type	226	1600	1600
*P6M	9	31/32	31/32	1 63/64	1	1/8	Snap Type	226	1600	1600
D5	7 1/2	2 9/16	2	2 23/32	1	3/8	Snap Type	707	----	----
*M6	9	1 13/16	1 13/16	2 7/16	1	2/5	Snap Type	266	----	1605
*D6S	9	2 1/4	1 1/4	7 29/32	1	1 1/8	Socket	2761	----	1608
*2Z3	4 1/2	1 3/8	1 3/8	2 3/4	1	1/8	Snap Type	---	----	1610
INDUSTRIAL—ELECTRONIC—TRANSISTOR BATTERIES "A TYPES"										
5R	1 1/2	49/64 (diam.)		2 15/64	12	3/4	Flashlight	----	---	---
8R	1 1/2	1 3/32 (diam.)		3 15/16	24	5-4/5	Socket	1052P	VS070	23
9R	1 1/2	35/64 (diam.)		1 43/64	12	1/2	Flashlight	1015E	----	---
2Z	1 1/2	1 1/8	19/32	1 63/64	10	3/4	Flashlight	1016E	----	---
2FBP	1 1/2	2 23/32	1 3/8	4 1/32	5	4-1/5	Binding Post	W354	VS101	700
F2BP	3	2 21/32	1 3/8	4 1/32	5	4	Binding Post	W352	VS100	701
F4BP	6	2 3/8	2 3/8	4	1	1-2/5	Binding Post	----	VS0405	915
2F2H	3	2 3/8	2 3/8	4 1/16	5	7	Binding Post	----	VS136	703
422	3	1 11/32	23/32	2 5/16	10	1-1/5	Brass Straps	750	VS134	704
432	4 1/2	1 31/32	21/32	2 1/4	10	2	Brass Straps	751	VS142	705
532	4 1/2	2 15/32	13/16	2 23/32	1	3/10	Brass Straps	703	VS133	706
2F4FL	6	4 1/8	2 11/16	5 1/2	1	2-4/5	FlexibleLeads	----	----	---
INDUSTRIAL—ELECTRONIC—TRANSISTOR BATTERIES "B TYPES"									R.C.A.	
4156	22 1/2	3 17/32	2 1/8	2 29/32	1	1	Binding Post	763	VS102	710
5156SC	22 1/2	4 1/8	2 1/2	2 3/4	5	8	Spring Clip	778	VS131	708
5308	45	4 1/16	2 9/16	5 1/8	1	3	Binding Post	W376	VS112	709
K10	15	1 1/4	7/8	1 17/32	1	2 ozs.	Flat Contact	417	----	---
K15	22 1/2	1 1/4	7/8	2 9/32	1	2 ozs.-	Flat Contact	420	----	---
K20	30	1 1/4	15/16	2 21/32	1	3 ozs.	Flat Contact	430	----	
U10	15	1	39/64	1 7/16	1	1 oz.	Flat Contact	411	VS083	208
U15	22 1/2	1	39/64	1 31/32	1	1 oz.	Flat Contact	412	VS084	209
U20	30	1	39/64	2 17/32	1	2 ozs.	Flat Contact	413	VS085	210
W30	45	3	1 1/4	3 25/32	1	3/5	Binding Post		----	
XX15	22 1/2	1 11/32	15/16	3 7/8	1	1/4	Socket	425P	----	--
XX22	33	2 17/32	31/32	3 1/8	1	1/3	Socket	433P	----	---
XX30PI	45	2 17/32	31/32	4 1/32	1	1/2	Socket	455P	----	---
Y10	15	19/32	19/32	1 23/64	1	1	Flat Contact	504	----	---
Y15	22 1/2	19/32	19/32	1 31/32	1	1 oz.	Flat Contact	505	----	---
Y20	30	1 3/16	19/32	1 13/32	1	1 oz.	Flat Contact	506	----	---
Y20S	30	19/32	19/32	2 9/16	1	1 oz.	Flat Contact	507		
Z30NX	45	3 1/32	1 7/8	4 19/32	5	7-3/5	Binding Post	W350	VS114	711
U200	300	2 3/4	2 9/32	3 7/8	1	1	Pin Jacks	493	VS093	722
*D30	45	5 1/16	2 1/32	7 5/16	1	4 1/2	Socket	487		---
*Z30T	45	3	2 5/16	4 1/8	1	1 1/2	Socket	----	----	---
INDUSTRIAL—ELECTRONIC—TRANSISTOR BATTERIES "C TYPES"										
2370PI	4 1/2	4 1/64	1 27/64	2 63/64	5	3-1/2	Binding Post	771	VS030	718
2370	4 1/2	3 15/16	1 3/8	2 7/8	5	3-3/4	Binding Post	761T	VS130	712
5540	7 1/2	4	7/8	2 3/4	5	2-2/5	Bind. Post Neg. Lead	773	VS029	713
5360	4 1/2	2 13/32	27/32	2 21/32	10	2-1/5	Binding Post	781	VS028	714
W5BP	7 1/2	2 31/32	23/32	1 3/4	6	4/5	Binding Post	---	----	---

TABLE 10-1: Transistor battery specifications and interchangeability data. BURGESS Catalog Numbers are listed in the first column; RCA, NATIONAL CARBON ("Eveready"), NEDA, and other types in the last three columns.

transistor and component damage, *always check battery polarity before installing a replacement unit.*

The batteries used in transistorized equipment may be checked using standard techniques. Check the unit's output voltage under "no load" and "full load" conditions; an appreciable drop generally indicates a defective battery. As an alternative, a service-type Battery Tester may be used, as shown in Fig. 10-7; such a unit checks the battery's voltage under load and provides a *"GOOD-?-BAD"* type of indication.

As a general rule, transistorized equipment is less sensitive to exact operating voltage than is tube-operated gear, and a transistorized receiver, for example, may continue to work nicely on voltages ranging from 40% below to 60% above its normal rating. More important than exact supply voltages, in most cases, is the battery's internal impedance or resistance. A high resistance here may cause interstage coupling through the power supply, *regardless of supply voltage;* this, in turn, may cause complaints ranging from "weak" operation to "squealing," "distortion," or "regeneration," depending on the equipment's circuit. A simple check here is to try shunting the battery with a 1,500 to 2,000 Mfd. capacitor, observing circuit polarity (working voltage should be at least equal to battery voltage, but may be higher); if the complaint is cleared, chances are the battery has a high internal resistance and should be replaced, no matter how it checks on voltage tests.

Transistor battery reference data is given in Table 10-I. Here, standard types of dry batteries are listed, along with their physical size, type of terminal, and output voltages; interchangeability information is given, too. This Table may be used as a guide when selecting replacement batteries for equipment being serviced.

There is one other type of "battery" that may be encountered from time to time . . . the *Solar* or *Sun Battery*. Basically, these are silicon or selenium photocells which can supply a small amount of electrical power . . . generally a fraction of a volt and up to a few milliamperes per "cell" . . . when exposed to a source of strong light, such as the sun. A few radio receivers have been built using Sun Batteries as alternate power sources. Generally, these are equipped with rechargeable batteries or dry battery power packs to permit their operation at night or on overcast days. The transistor circuits used in such sets are virtually identical to those encountered in more conventional receivers.

AUDIO TRANSFORMERS. Small iron core audio transformers are used much more frequently in transistorized equipment than in tube-operated devices. Here, they serve not only as impedance-matching audio output transformers but, just as often, for interstage coupling.

ARGONNE NUMBER	TYPE	IMPEDANCE PRIMARY OHMS	IMPEDANCE SECONDARY OHMS	UNBALANCED CURRENT PRI. D.C. MA	POWER MILLI-WATTS	D.C. RESISTANCE PRI. OHMS	D.C. RESISTANCE SEC. OHMS	OVERALL SIZE
AR-141	Input	500,000	1,500 CT	.3	350	3500	60	1"x¾"x¾"
AR-142	Input	500,000	200 CT	.3	350	3500	20	1"x¾"x¾"
AR-143	Input	250,000	200 CT	.5	350	3500	20	1"x¾"x¾"
AR-144	Input	200,000	1,500 CT	.5	350	3000	65	1"x¾"x¾"
AR-100	Input	200,000	1,000	.0	100	3600	90	1"x¾"x¾"
AR-126	Input	150,000	1,500 CT	2.	100	3700	55	1"x¾"x¾"
AR-101	Input	100,000	3,000 CT	.5	100	3600	60	1"x¾"x¾"
AR-145	Input	100,000	2,000 CT	.5	350	3000	50	1"x¾"x¾"
AR-102	Input	100,000	1,500 CT	.5	100	3600	40	1"x¾"x¾"
AR-146	Input	100,000	50	.5	350	3000	1.6	1"x¾"x¾"
AR-127	Input	50,000	3,000 CT	1.	100	2000	50	1"x¾"x¾"
AR-128	Input	50,000	1,500 CT	2	100	3000	50	1"x¾"x¾"
AR-129	Input	50,000	1,000	2	100	2500	20	1"x¾"x¾"
AR-148	Input	50,000	500 CT	1.	175	1300	20	¾"x⅝"x⅝"
AR-149	Input	50,000	200 CT	1.	175	1300	10	¾"x⅝"x⅝"
AR-147	Input	50,000	30 CT	1.	175	1300	1.5	¾"x⅝"x⅝"
AR-150	Input	40,000	100	1.	175	850	6	¾"x⅝"x⅝"
AR-103	Driver	20,000	2,000 CT	1.	100	400	50	1"x¾"x¾"
AR-104	Driver	20,000	1,000	.0	100	400	50	¾"x⅝"x⅝"
AR-151	Driver	20,000	800 CT	1.5	175	600	60	¾"x⅝"x⅝"
AR-105	Driver	20,000	400	1.	100	600	30	1"x¾"x¾"
AR-130	Output	20,000	8	.5	100	400	0.6	¾"x⅝"x⅝"
AR-131	Output	20,000	3.2	.5	100	400	0.3	¾"x⅝"x⅝"
AR-106	Driver	16,000	4,000	1.	100	620	350	¾"x⅝"x⅝"
AR-152	Driver	15,000	200 CT	1.5	175	550	10	¾"x⅝"x⅝"
AR-107	Driver	15,000	200	1.5	250	1000	20	1"x¾"x¾"
AR-108	Driver	10,000	3,000 CT	.0	100	200	100	¾"x⅝"x⅝"
AR-109	Driver	10,000	2,000	.0	100	500	50	¾"x⅝"x⅝"
AR-153	Driver	10,000	200 CT	2.	175	400	10	¾"x⅝"x⅝"
AR-110	Output	10,000	16	2	150	600	2.5	¾"x⅝"x⅝"
AR-132	Output	10,000	8	1.	100	600	.6	¾"x⅝"x⅝"
AR-133	Output	10,000	3.2	1.	100	600	.3	¾"x⅝"x⅝"
AR-158	Input	5,000 CT	80,000	2	175	350	1800	¾"x⅝"x⅝"
AR-157	Input	5,000	45,000	2.	175	250	1600	¾"x⅝"x⅝"
AR-156	Input	5,000	30,000	2.	175	150	1300	¾"x⅝"x⅝"
AR-155	Input	5,000	10,000	2.	175	150	450	¾"x⅝"x⅝"
AR-154	Input	5,000	7,500 CT	2.	175	150	400	¾"x⅝"x⅝"
AR-173	Driver	5,000	3,000 CT	2.	350	200	90	1"x¾"x¾"
AR-111*	Output	5,000	100	1.	100	600	10	¾"x⅝"x⅝"
AR-134	Output	4,000 CT	8	4.	250	150	.8	1"x¾"x¾"
AR-135	Output	4,000 CT	3.2	4.	250	150	.3	1"x¾"x¾"
AR-112	Output	3,500	200	1.	150	120	25	1"x¾"x¾"
AR-113*	Driver	3,000 CT	1,000	9.	150	100	60	¾"x⅝"x⅝"
AR-114	Output	2,500	11	10.	150	.50	1.1	¾"x⅝"x⅝"
AR-115	Input	2,000 CT	8,000 CT	.0	150	150	660	1"x¾"x¾"
AR-116	Output	2,000	200	4.	250	120	20	1"x¾"x¾"
AR-175	Driver	2,000	1,500 CT	2	350	150	60	1"x¾"x¾"
AR-159	Driver	1,500	500 CT	4.	175	100	20	¾"x⅝"x⅝"
AR-136*	Output	1,000 CT	100	4.	250	120	10	1"x¾"x¾"
AR-137*	Output	1,000 CT	8	4.	250	120	9	1"x¾"x¾"
AR-138*	Output	1,000 CT	3.2	4.	250	120	3	1"x¾"x¾"
AR-160	Output	800 CT	3.2	5.	175	40	3	¾"x⅝"x⅝"
AR-161	Output	650 CT	16	5.	175	27	1.3	¾"x⅝"x⅝"
AR-162	Output	500 CT	500 CT	5.	350	18	18	1"x¾"x¾"
AR-163	Output	500 CT	150 CT	5.	175	18	8	¾"x⅝"x⅝"
AR-165	Output	500 CT	50	5.	175	18	4	¾"x⅝"x⅝"
AR-117	Output	500 CT	30	.0	100	20	1.5	¾"x⅝"x⅝"
AR-118	Output	500 CT	16	.0	100	20	1.5	¾"x⅝"x⅝"
AR-164	Output	500 CT	8	5.	175	18	.8	¾"x⅝"x⅝"
AR-119	Output	500 CT	3.2	.0	100	20	.3	¾"x⅝"x⅝"
AR-166	Output	400 CT	16	5.	175	16	1.3	¾"x⅝"x⅝"
AR-120*	Output	400 CT	11	1.	150	20	.9	¾"x⅝"x⅝"
AR-167	Output	400 CT	8 or 3.2	5.	175	16	.6/.3	¾"x⅝"x⅝"
AR-168	Output	300 CT	16	6.	175	12	1.4	¾"x⅝"x⅝"
AR-121*	Output	300 CT	3.2	.0	150	20	.25	¾"x⅝"x⅝"
AR-139*	Output	250 CT	8	2.	250	15	.7	1"x¾"x¾"
AR-122*	Output	250 CT	3.2	.0	150	11	.3	1"x¾"x¾"
AR-123	Input	200	2,000 CT	2.	150	11	50	1"x¾"x¾"
AR-124*	Output	200 CT	16	.0	250	20	1.3	¾"x⅝"x⅝"
AR-169	Output	200 CT	8 or 3.2	7.	175	9	.6/.3	¾"x⅝"x⅝"
AR-140*	Output	200 CT	3.2	2.	100	10	.3	¾"x⅝"x⅝"
AR-170	Output	160 CT	8 or 3.2	8.	350	10	.6/.3	1"x¾"x¾"
AR-176	Output	125 CT	8	8.	350	4	.7	1"x¾"x¾"
AR-174	Output	125 CT	3.2	8.	350	6	.3	1"x¾"x¾"
AR-171	Output	100 CT	10 CT	10.	175	4	.8	¾"x⅝"x⅝"
AR-172	Output	48 CT	8 or 3.2	15.	350	2.3	.6/.3	1"x¾"x¾"
AR-125	Input	3	4,000	.0	250	14	50	¾"x⅝"x⅝"

TABLE 10-J: Transistor transformer reference guide. ARGONNE type numbers are given in the first column, together with complete electrical and mechanical specifications to permit the choice of a replacement type.

Interstage transformers, of course, are encountered rather seldom in tube equipment. Table 10-J lists various standard *Input, Driver,* and *Output* transformer types which may be found in transistorized equipment, and may be used as a general replacement guide. In each case, full electrical specifications and physical dimensions are given.

WAVEFORM ANALYSIS

Most of the basic service techniques outlined in Section 1 serve to isolate defects causing a *major* change in equipment performance . . . such as "weak operation," "squealing," "motorboating," "dead set," and so on. Perhaps as high as 85% to 95% of the service complaints encountered will fall into this general category. When servicing precision amplifiers, Hi-Fi equipment, and similar gear, however, it is often necessary to check for *minor* changes in equipment operation and to track down troubles which may cause a slight deterioration in overall operation. Here, more refined techniques must be employed, the most effective of which are *Sine-Wave* and *Square-Wave Analysis* tests. The basic test method used is shown in block diagram form in Fig. 10-8. The equipment to be checked may be a broadband Video amplifier, a Hi-Fi system or a precision Laboratory amplifier. The test instruments are an appropriate test Signal Generator and a good quality Oscilloscope. To start the tests, the equipment is first terminated in an appropriate output load (RL); in the case of a Hi-Fi amplifier, this may be a 25 or 50 watt non-inductive resistor with a resistance equal to the impedance of the loudspeaker normally driven by the amplifier. All equipment controls are set for "normal" operation; later, as the tests proceed, these controls may be adjusted over their operating range as a check to see that they perform their desired functions. The Signal Generator is connected to the equipment through a shielded cable and isolating capacitor (C1); the capacitor's value should be quite high . . . a good rule here is to use a unit with a capacity from five to ten times that of any interstage coupling capacitors used in the equipment. The Generator's output *Level* or *Attenuator* control, originally, is set to supply an input signal amplitude equal to the equipment's normal rating. Later, the input level may be increased above this value to check "overload" point, or reduced to relatively low values to check the equipment's performance with low-level signals.

Actual tests are carried out by using the Oscilloscope to observe input and output signal waveforms and amplitude as input frequency and, later, levels are varied. Deterioration in signal waveform is indicative of certain types of defects. Later, an identical technique may be used to check the performance of *individual* stages in the equipment, as illustrated in Fig. 10-9.

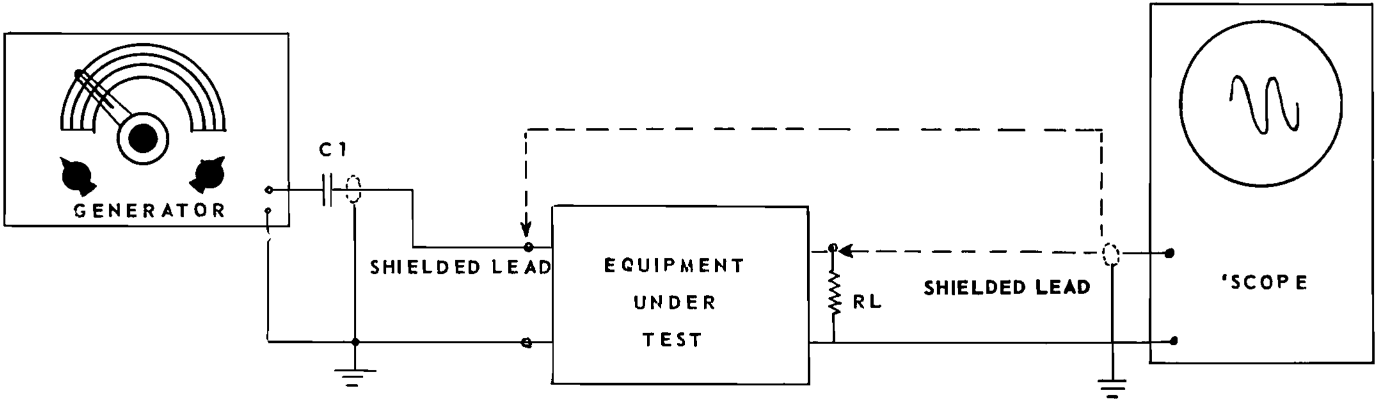

Fig. 10-8: Basic equipment set-up for Sine-Wave or Square-Wave performance tests.

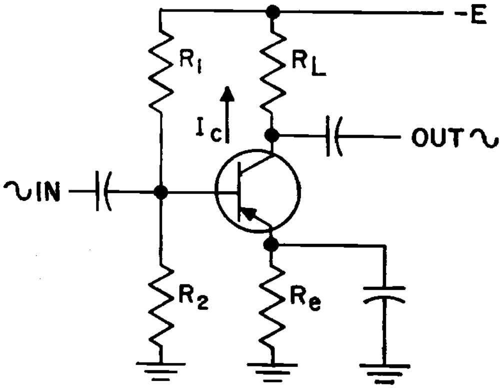

Fig. 10-9: A single-stage transistor amplifier. A PNP transistor in the common-emitter circuit configuration is shown.

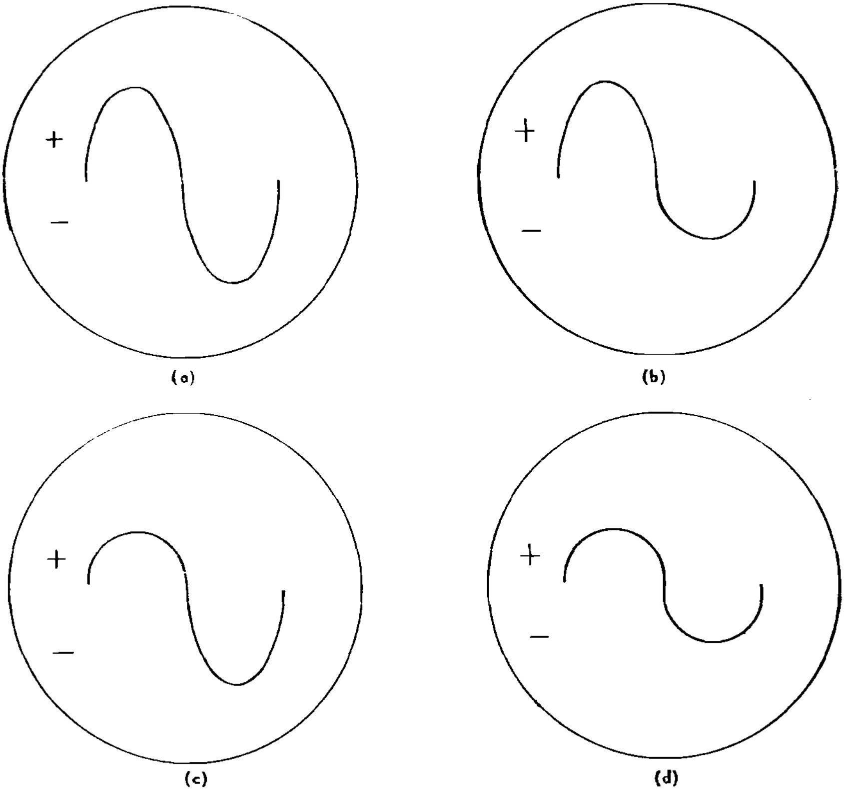

Fig. 10-10: Various types of Sine-wave distortion . . . (a) Normal waveform, (b) Flattened negative peak, (c) Flattened positive peak, and (d) Both peaks flattened or clipped.

An Audio or R.F. Signal Generator is used for *Sine-Wave Analysis* tests, depending on the operating characteristics of the equipment. Typical signal waveforms encountered here are illustrated in Fig. 10-10; Table 10-K indicates typical stage defects or operating conditions which may cause each type of distortion. *Frequency response* measurements may be made by keeping the input signal level constant (by adjustment of the Signal Generator's output Attenuator) while applying different input signal frequencies over the equipment's operating range, using the Oscilloscope to check output signal amplitude (across RL) at each frequency. This general type of test is excellent for determining the effectiveness of *Tone* controls in adjusting an amplifier's frequency response characteristics.

TRANSISTOR TYPE	SINE-WAVE DISTORTION	SEE FIG.	PROBABLE CAUSES
PNP	None	10-10 (a)	Circuit operation normal.
	Negative peaks clipped	10-10 (b)	Low bias; battery voltage low; weak transistor; high value load resistor.
	Positive peaks clipped	10-10 (c)	High bias; weak or high resistance battery; leaky transistor; leaky coupling capacitor; low value load resistor.
	Both peaks clipped	10-10 (d)	Overdrive; weak battery; weak transistor.
NPN	None	10-10 (a)	Circuit operation normal.
	Negative peaks clipped	10-10 (b)	High bias; weak or high resistance battery; leaky transistor; leaky coupling capacitor; low value load resistor.
	Positive peaks clipped	10-10 (c)	Low bias; battery voltage low; weak transistor; high value load resistor.
	Both peaks clipped	10-10 (d)	Overdrive; weak battery; weak transistor.

TABLE 10-K: Sine-wave distortion Reference Chart.

Square-Wave Analysis tests are made using exactly the same basic technique, but with a Square-Wave Generator used in place of a Sine-Wave test source. As a general rule, Sine-Wave tests are best for identifying and locating *distortion* or for precision frequency response measurements. Square-Wave tests, on the other hand, permit more rapid checks of overall frequency response and are superior for checking an amplifier's response to transient signals. In making Square-Wave tests, however, care must be taken to keep input signal levels well below the equipment's "overload" point, not only to protect transistors and other components from excessive transient peaks, but to prevent signal waveform distortion which can be misinterpreted. With a Sine-Wave test signal, overload shows up immediately as a flattening of signal peaks; with a Square-Wave signal, overload simply causes the waveform's flat top to become "flatter."

SQUARE-WAVE INPUT	OUTPUT WAVEFORM	FIG. NO.	DIAGNOSIS
Low frequency (50-100 c.p.s.)	Like input	10-11 (a)	Circuit operation normal.
	Slanting down	10-11 (b)	Poor low frequency response - partially open coupling or emitter by-pass capacitor.
	Sharp pulse	———	Extremely poor low frequency response – open coupling capacitor or shorted primary in interstage transformer.
	Slanting up	10-11 (c)	Accentuated low frequency response – partially open by-pass capacitor or defective decoupling filter.
	Rounded top	10-11 (d)	Accentuated response at fundamental frequency of square wave – defective interstage transformer, changed value coupling or by-pass capacitors, defect in degenerative feedback network.
	Rounded edge	10-11 (e)	Poor moderate frequency response – excessive distributed capacities, defective interstage transformer.
	Damped oscillation	10-11 (f)	Peak in middle range of frequencies – changed value by-pass capacitor, defective coupling transformer, inadequate shielding, poor lead dress, defect in feedback network, defective by-pass or decoupling capacitors.

TABLE 10-L: Square-wave distortion Reference Chart — Low Frequencies.

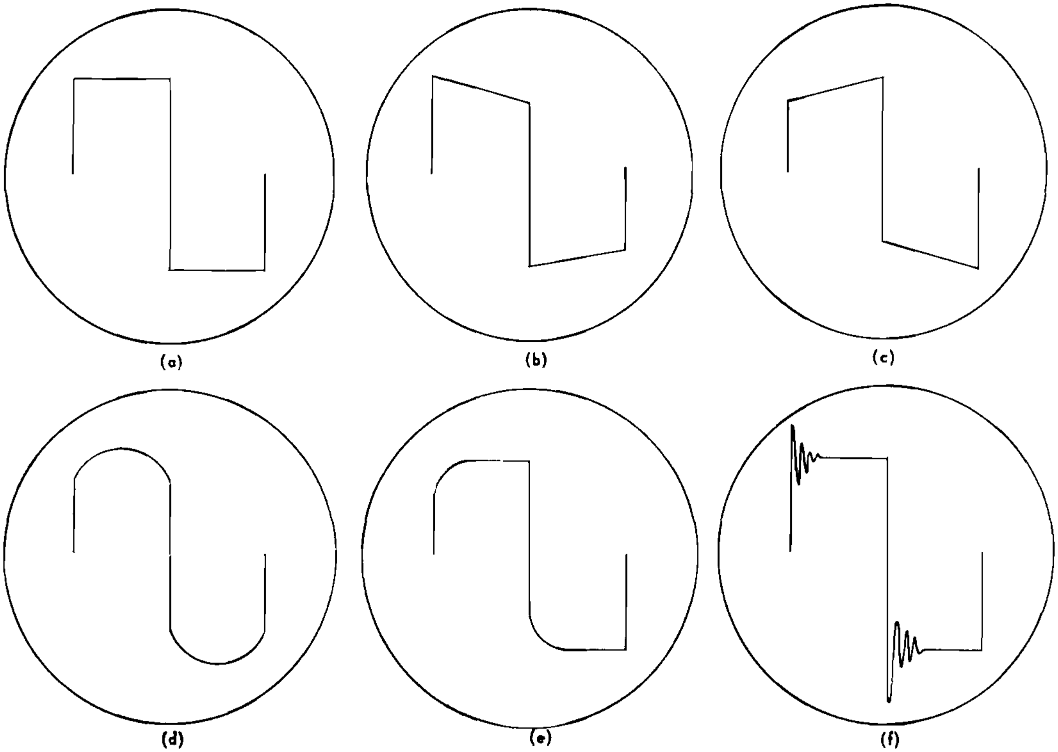

Fig. 10-11: Various types of Square-wave distortion . . . (a) Normal waveform, (b) Downward slanting (or tilted) top, (d) Rounded top, (e) Rounded leading edge, and (f) "Ringing" or damped oscillation.

SQUARE-WAVE INPUT	OUTPUT WAVEFORM	FIG. NO.	DIAGNOSIS
Medium frequency (500–2500 c.p.s.)	Like input	10-11 (a)	Circuit operation normal.
	Slanting down	10-11 (b)	Phase, shift, poor low frequency response – partially open coupling or emitter by-pass capacitor.
	Sharp pulse	———	Extremely poor low and middle frequency response; open coupling capacitor or shorted primary in interstage transformer.
	Slanting up	10-11 (c)	Accentuated response at middle frequencies – partially open by-pass or filter capacitor, defect in feedback network.
	Rounded top	10-11 (d)	Accentuated response at fundamental frequency of test square-wave signal – defective interstage transformer or partially open by-pass capacitor, defect in feedback network, poor lead dress.
	Rounded leading edge	10-11 (e)	Poor moderate to high frequency response – excessive distributed capacities, defective interstage transformer.
	Damped oscillation	10-11 (f)	Peak at high frequencies – changed value by-pass capacitor, defective coupling transformer, poor shielding, improper lead dress, defect in feedback network, open load resistor (in video circuits).

TABLE 10-M: Square-wave distortion Reference Chart — Medium Frequencies

SQUARE-WAVE INPUT	OUTPUT WAVEFORM	FIG. NO.	DIAGNOSIS
High frequency (5 KC – 20 KC) ↓	Like input	10-11 (a)	Circuit operation normal – high frequency response reasonably flat to 10 or 20 times input square-wave frequency.
	Slanting down	10-11 (b)	Phase shift, poor medium frequency response – partially open coupling or emitter capacitor.
	Sharp pulse	———	Extremely poor medium frequency response – open transistor or interstage transformer.
	Slanting up	10-11 (c)	Accentuated response at high frequencies, causing phase shift – defect in frequency compensation network, changed value loading resistors (in video amplifiers).
	Rounded top	10-11 (d)	Accentuated response at fundamental frequency of test signal – should show up as "damped oscillation" when lower frequency test signal used. Open by-pass or decoupling capacitor, poor lead dress, defective shielding, defect in feedback network.
	Rounded edge	10-11 (e)	Poor high frequency response, with "rounding" increasing as high frequency response falls off – excessive distributed capacities, increased value load resistor, open peaking coil (in video ckts.)
	Damped oscillation	10-11 (f)	Peak in response at frequency beyond normal (desired) range – open by-pass or decoupling capacitors, poor lead dress, defective shielding, open load resistor (in video circuits), wrong value or misadjusted peaking coil, improperly loaded interstage transformers.

TABLE 10-N: Square-wave distortion Reference Chart — High Frequencies.

If the latter occurs, of course, an off-hand observation may lead one to conclude that circuit operation is normal when, in fact, there may be serious defects present. Typical Square-Wave signal waveforms are illustrated in Fig. 10-11, with Tables 10-L, 10-M, and 10-N indicating stage defects or operating conditions which can result in each of the patterns shown at low, medium, and high frequencies, respectively.

SPECIAL REPAIR METHODS

In many types of service and maintenance work, "diagnosis" may represent a major part of total repair time, with a defect easily corrected once isolated. Generally speaking, the opposite situation holds true as far as the repair of miniature transistorized equipment is concerned. Here, a defect may be isolated in minutes using the test techniques outlined in Section 1 and the various Troubleshooting Charts given throughout this book. Once a defective component is pin-pointed, however, considerable effort may be required to remove and replace it. This is due to the ultra-compact circuitry employed, the small physical size of the components themselves, and the special care which must be exercised to avoid damage to other circuit components and wiring while a repair job is carried out. Often, a defective part is "buried" under other components which may be easily damaged by the heat of a soldering iron or by physical pressure. Fine coil leads, for example, may be "snapped" if an excessive twisting or bending motion is imparted to their terminal lugs.

To keep actual repair time to a minimum, then, it is imperative that proper service tools (as outlined in Section 1) be obtained, and that skill be acquired in their use. In addition, "standard" service procedures may be modified slightly to adapt them to the repair of miniature equipment. In routine service work, for example, accepted practice is to make a secure mechanical connection between a component lead or hook-up wire and a terminal lug *before* soldering. This is difficult to accomplish in cramped quarters, and, in most cases, is not necessary. Lap-type soldered connections are quite satisfactory in all equipment except military or industrial gear subject to extreme continuous vibration or shock.

Another technique easily modified is the installation of circuit wiring. Standard procedure here calls for the installation of conventional insulated hook-up wire, stripped and tinned at both ends; to save time, some service technicians employ "push-back" wire. When working with miniature equipment, however, it is much easier . . . . and faster . . . to install fine, *bare,* pretinned wire, slipping on a piece of small pre-cut spaghetti tubing for insulation *after* one end is connected. The tubing is cut slightly shorter than the wire to allow room for soldering at each end.

Transistors and other semiconductor components are easily damaged by excessive heat. However, these parts are frequently wired permanently in their circuits. A soldering iron must be used to remove the components for test or to install replacements. To avoid damage here, a *heat sink* should be used to conduct excessive heat away from the component. This is simply a fair size "chunk" of metal interposed between the point at which the soldering iron is applied to the component's lead and the component itself. The use of standard lone-nose pliers and a small alligator clip as *heat sinks*

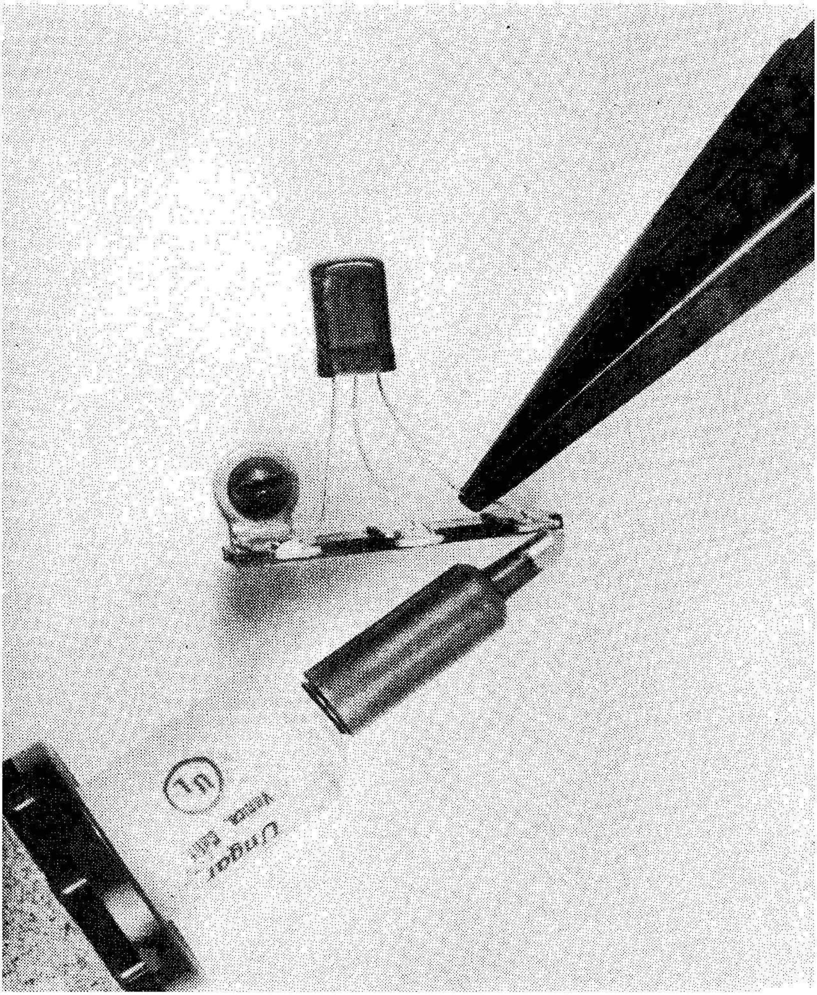

Fig. 10-12: Using long-nose pliers as a "heat sink."

is shown in Figs. 10-12 and 10-13, respectively. All soldering . . . or de-soldering work . . . in transistor circuits should be carried out as quickly as possible, using a clean, hot, well-tinned soldering tool. The hot tip should be held against the work *only* for as long as is necessary to complete the job.

ETCHED CIRCUIT REPAIR. Etched circuit boards are used extensively in the manufacture of transistorized equipment. As mentioned briefly in Section 1, special tools and materials are available for the

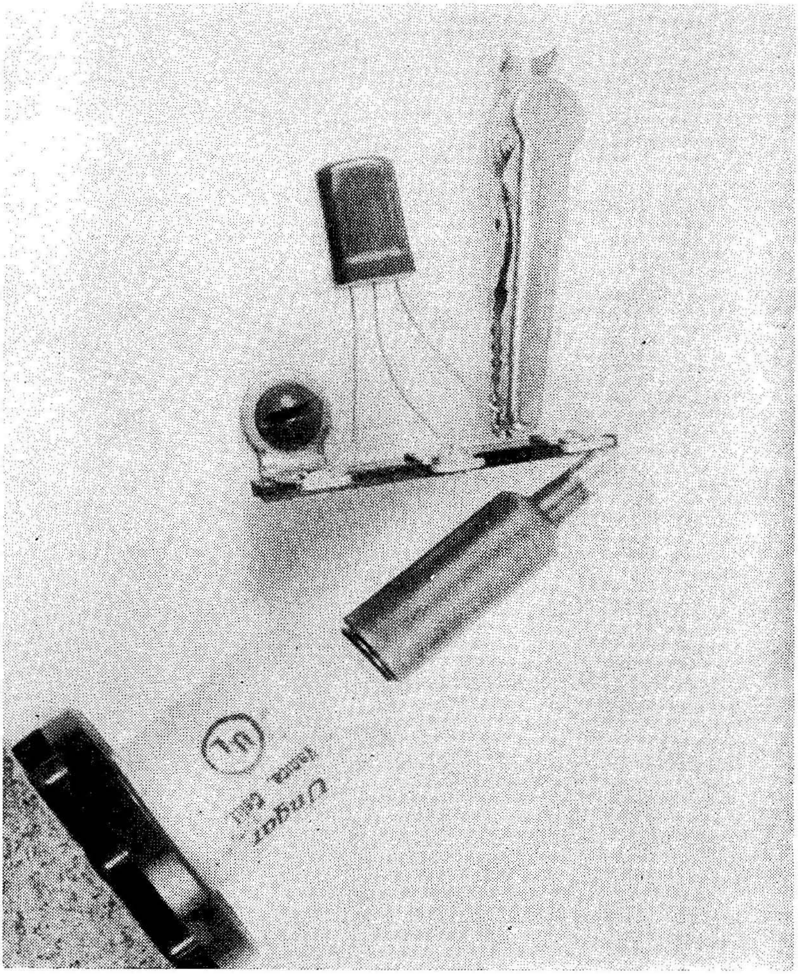

Fig. 10-13: Using a small alligator clip as a "heat sink."

repair of etched circuits, and the service technician undertaking such jobs should acquire the necessary tools as soon as the volume of his work warrants their use. Special-purpose hand tools useful for etched circuit board repair are shown in Fig. 10-14; these are used in conjunction with "standard" hand tools such as long-nose pliers, diagonal cutters, and so on. In addition to a small-tip soldering iron (or gun), cup-shaped and bar-shaped soldering tips may be needed for simultaneously heating several connection points at a time; often, these are available in special kits, as illustrated in Fig. 10-15. The soldering tool, of course, should be kept clean and well-tinned.

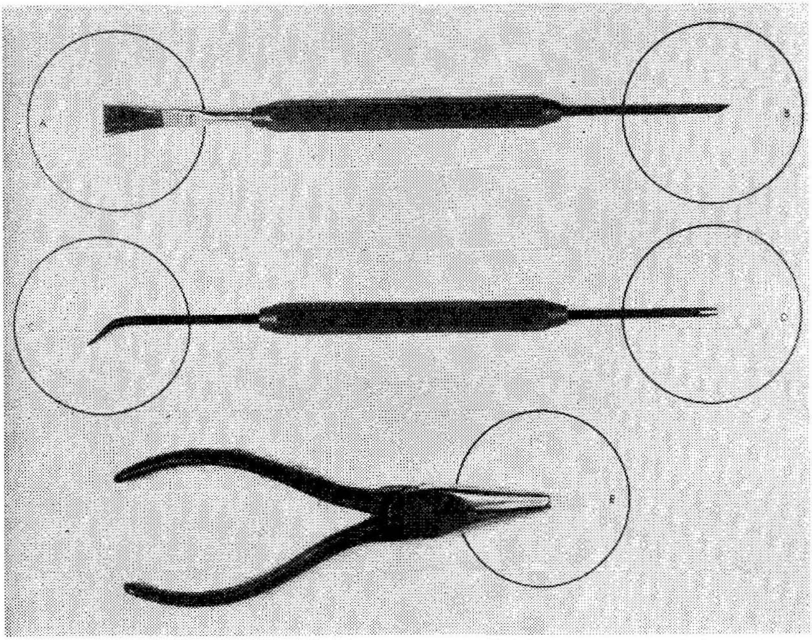

Fig. 10-14: Special tools for servicing etched-circuit boards . . . A — wire brush; B — knife edge; C — bent point; D — double point; E — end cutters.

Typical circuit board repair techniques are illustrated in Figs. 10-16 through 10-20. If a two-lead component such as a resistor or capacitor is defective, replacement is accomplished most easily by using the technique shown in Fig. 10-16(a). The part is cut out

Fig. 10-15: Printed circuit board De-soldering Kit. This consists of a handle, soldering iron heating element, and various attachments suitable for de-soldering printed circuit components.

using diagonal cutters, with care taken to "save" as much of the component leads as is practicable. The replacement component, then, is attached to the short leads left by the defective part and soldered in place; this method avoids the need for soldering to the circuit board itself. In a few instances, it may be difficult to reach component leads using standard diagonal cutters; here, end cutters similar to those shown in Fig. 10-14 (E) may be employed . . . proper technique is illustrated in Fig. 10-17.

If a two-lead component is mounted in such a way that the method illustrated in Fig. 10-16(a) cannot be used, it is usually necessary to apply heat directly to the component terminals on the foil side of the board and to pull the component leads through the board one at a time, using a pair of pliers. If preferred, an alternate method is to cut the leads flush with the board, then to apply heat to each terminal to melt the solder, pushing out the remaining short

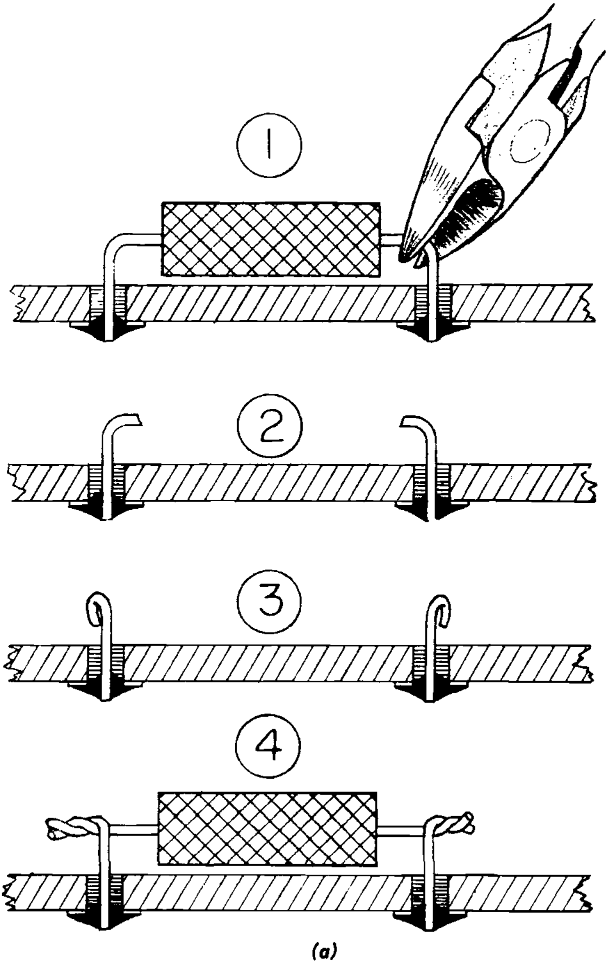

(a)

Fig. 10-16: Replacing printed circuit board components . . . (a) technique for replacing resistors and capacitors; (b) technique to use when replacing coils.

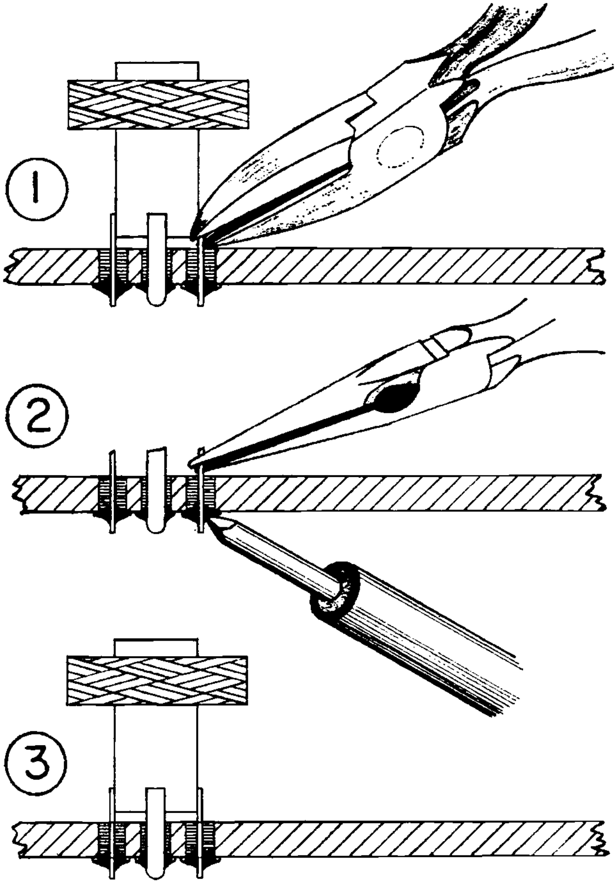

(b)

length of wire and cleaning out the hole from the rear; a stiff wire, such as a straightened paper clip, may be used for this job. Proper technique is shown in Fig. 10-19. With both holes cleaned, the replacement component is simply fitted in position, and its wires fed through the proper holes. Excess lead length is cut off, and the unit soldered in position.

Multi-terminal components such as can type electrolytic capacitors, coils, I.F. transformers, and so on, can be removed by heating all their terminals simultaneously, using a cup or bar-shaped tip on the soldering tool. If a suitable tip is not available, the technique illustrated in Fig. 10-16(b) may be employed. Here, each terminal is first cut free from the component. Next, the short terminal pieces are removed one at a time by applying the soldering tool and pulling on the lead with a pair of long nose pliers. Once all the terminals have been removed, excessive solder can be cleaned away by applying the hot soldering tip and brushing with a small wire brush; use care during this operation to avoid accidental shorts as the old solder in brushed away. If considerable solder is present, don't try to remove it all at once. Instead, heat and brush away a little at a time until

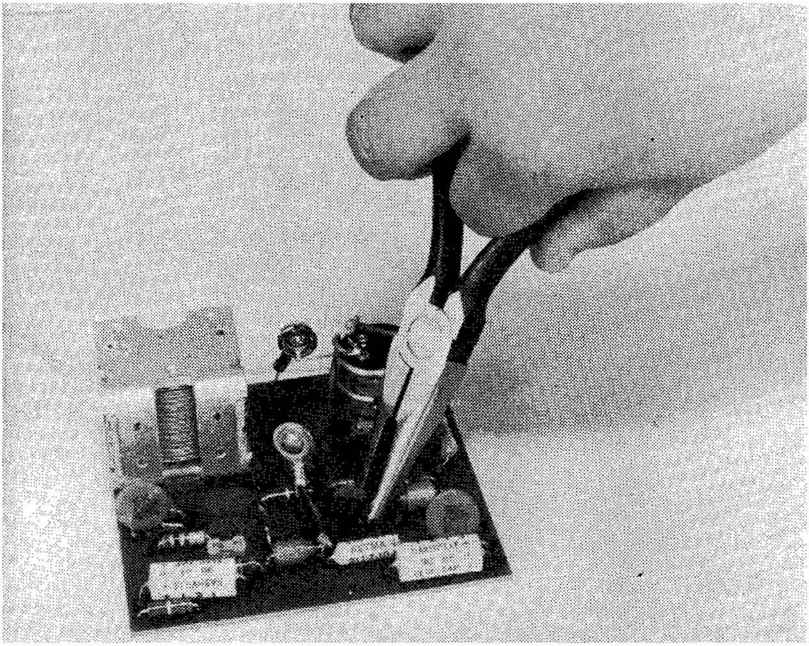

Fig. 10-17: Using end-cutters to remove a ceramic capacitor from an etched circuit board.

the area is clean. Finally, the replacement component is fitted into the cleaned terminal holes, with its terminals soldered in conventional fashion one at a time.

The circuit boards themselves may be damaged in a variety of ways. If excessive heat is applied during soldering (or de-soldering) operations, the copper foil wiring may raise or, in extreme cases, may peel off entirely. The foil may be cracked or broken under the stress of component removel. In other instances, an accidental short across a power carrying conductor may fuse and melt the foil. And, of course, the board itself may be cracked by excessive mechanical pressure or shock; sometimes the cracks are so minute they are difficult to spot with the naked eye . . . here a magnifying glass and strong light source may be handy. An alternate technique for finding minute cracks (often called *micro-cracks*) is to flex the board *slightly* in the area of the suspected crack, checking for an open circuit using a standard Ohmmeter; this last method, of course, is a practical variation of the familiar *Brute-Force* technique described in Section 1. A similar method may be used for locating poorly soldered component connections. Cracks, breaks, or opens in the copper foil wiring may

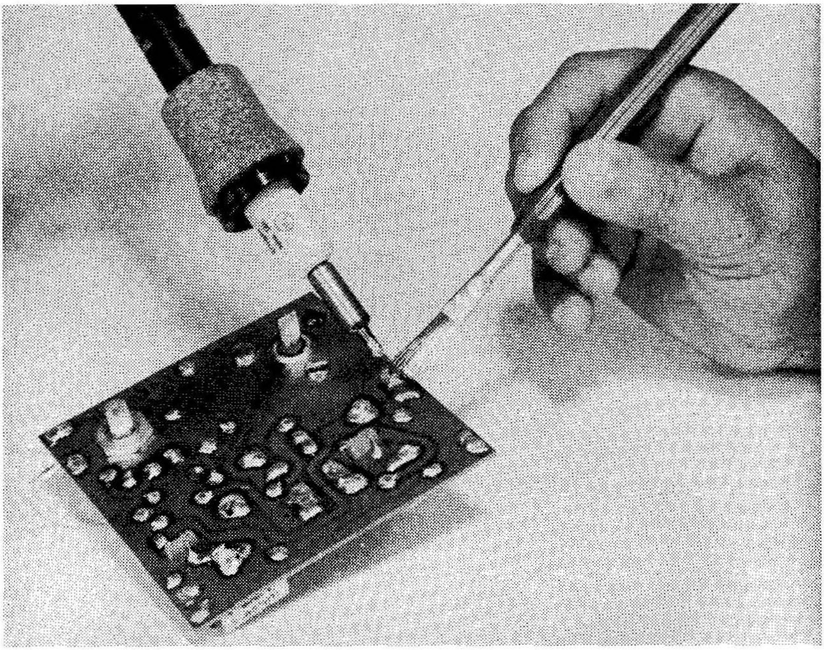

Fig. 10-18: A wire brush may be used to brush away excess solder prior to de-soldering a component lead.

be repaired simply by soldering a short piece of bare hook-up wire across them as a "bridge."

Equipment manufacturers generally solder all circuit board connections in a single operation, using a "dip" soldering process. Afterwards, the board's "wiring" (foil) side is coated with *silicone resin*

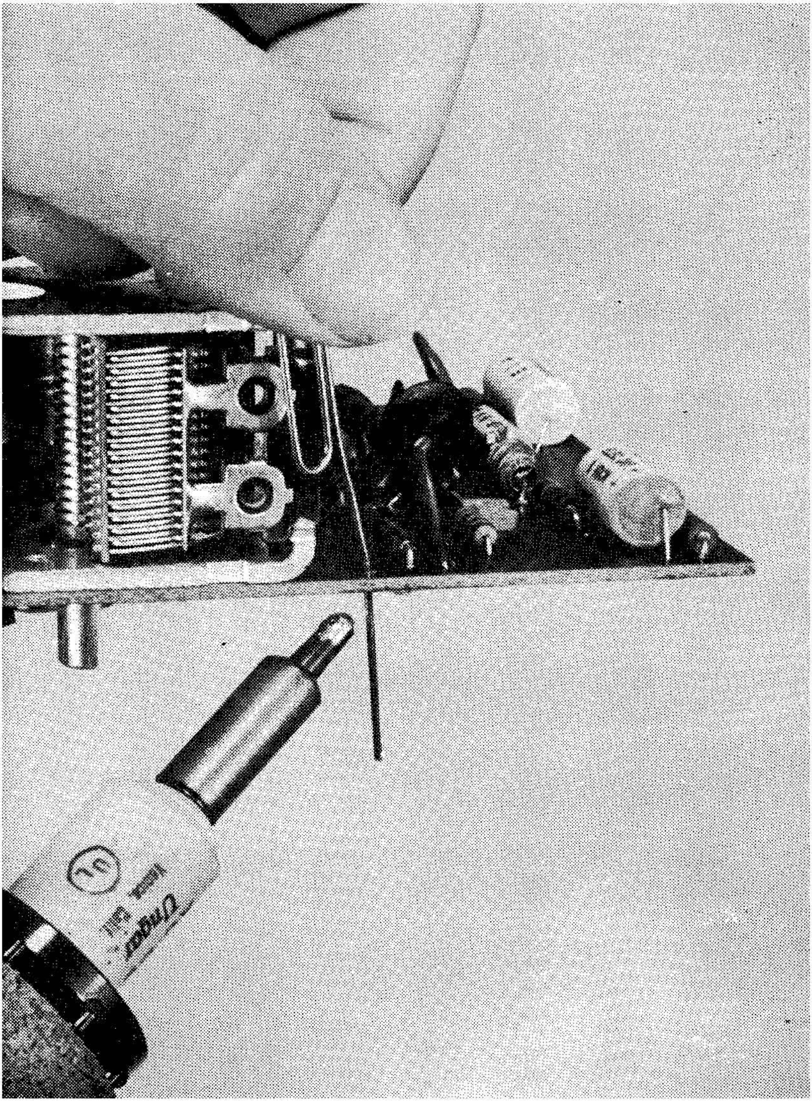

Fig. 10-19: You can use a straightened paper clip to "open" solder holes.

to protect the wiring, to minimize leakage, and to reduce the chances of accidental shorts. For a professional touch, a similar technique may be used by the service technician once he has completed a repair job and cleaned the board of excess solder and dirt. Silicone resin compounds are available through most distributors, both in bottle form, for application with a brush, and in easily used push-button Aerosol cans; see Fig. 10-20.

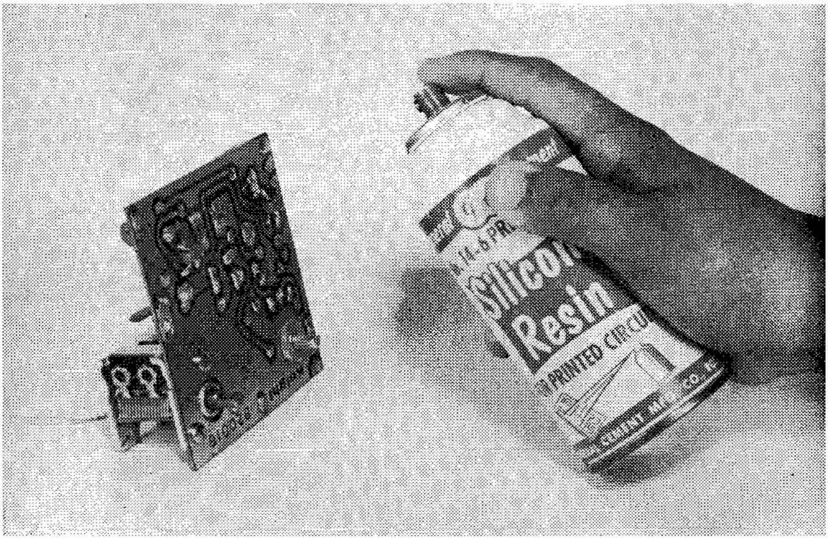

Fig. 10-20: Once repairs have been completed, an etched circuit board may be given a protective coat of sprayed-on silicone resin.

When working with etched circuit boards, the following precautions should be observed at all times:

1) **AVOID OVERHEATING** — Hold the soldering tip in place only for as long as is needed to melt the solder and to insure a good job. Keep the tip clean, hot, and well-tinned.

2) **USE A MINIMUM OF SOLDER** — When installing a component or repairing a board, use only enough solder to insure a good job. An excessive deposit may cause shorts or may result in an intermittent defect in the future.

3) **USE A MINIMUM OF PRESSURE** — Avoid excessive stresses on the etched circuit board or its components. Don't flex the board unduly when removing or installing. If difficulty is encountered when removing or installing a circuit board on a chassis (or in a cabinet), find and correct the cause . . . don't force!

UNIQUE DEFECTS. From time to time, the practical service technician will encounter unusually difficult diagnosis jobs. These "dogs" fail to yield to standard troubleshooting techniques and, in the end, can be repaired only after exhaustive tests and, frequently, after a component-by-component check through several stages. In most instances, such defects are unique to a particular make and model of equipment and are the result of either a poor batch of components used in a given production run or a slight "bug" in circuit design which was later caught and corrected. As we have observed in earlier Sections, it is not unusual for a manufacturer to make a number of changes during the production of a single model. Once a unique defect has been tracked down to its lair, most technicians like to make a note of it for future reference in the event the same type and model of equipment again crosses their service bench; the accepted rule here is "once is enough." To aid in this, Table 10-O has been included for the convenience of the reader in keeping a record of *Unique Defects* he encounters in his own work. These may be recorded as found, thus, forming a permanent, personal check-list.

GENERAL NOTES

MANUFACTURER AND MODEL NUMBER	COMPLAINT	CAUSE AND CURE

TABLE 10-O: UNIQUE DEFECT REFERENCE CHART. Fill in this blank table with unusual complaints you encounter in your service work, thus building up your own personal file of "Service Tips"

MANUFACTURER AND MODEL NUMBER	COMPLAINT	CAUSE AND CURE

TABLE 10-O: UNIQUE DEFECT REFERENCE CHART (Continued).

MANUFACTURER AND MODEL NUMBER	COMPLAINT	CAUSE AND CURE

TABLE 10-O: UNIQUE DEFECT REFERENCE CHART (Continued).

MANUFACTURER AND MODEL NUMBER	COMPLAINT	CAUSE AND CURE

TABLE 10-O: UNIQUE DEFECT REFERENCE CHART (Continued).

INDEX

Bandwidth (TV) — 283, 287.
Bass — 54, 56, 57, 80, 83.
Batteries — 41, 180, 438-440.
Batteries, "A" — 100.
Batteries, "B" — 100.
Batteries, alkaline cell — 101, 438-440.
Batteries, mercury — 101, 108, 116, 117, 142, 302, 438-440.
Batteries, nickel-cadmium — 149, 302-304, 438-440.