Official Radio Service Manual

and

Complete Directory

of all

Commercial Wiring Diagrams

Official

RADIO SERVICE MANUAL

and
Complete Directory of
all Commercial Wiring
Diagrams of Receivers

PREPARED ESPECIALLY
FOR THE
RADIO SERVICE MAN

HUGO GERNSBACK
Editor

CLYDE FITCH
Managing Editor

GERNSBACK PUBLICATIONS, INC.
PUBLISHERS
96-98 PARK PLACE
NEW YORK

TABLE OF CONTENTS

***** INDEX TO COMMERCIAL WIRING DIAGRAMS *****

INTRODUCTION

THIS book has been compiled in an attempt to give the radio Service Man as complete and concise a compendium of practical data and instruction concerning radio installation, maintenance and repair as could be selected from the hosts of material already written on the subject. It is evident that a book of this type, to be entirely complete, would cover virtually all phases of radio and include complete diagrams and specifications of every radio set that has ever been built -- an enormous undertaking which would give the book a stupendous size. While such a volume would be of value for reference, it would be too clumsy to be handled by the busy radio Service Man who wants practical information, suggestions, and data in few words at his finger tips, with diagrams and specifications of the more popular types of sets in active service that daily require his attention. Therefore, only the salient features of radio servicing are given, and information on the servicing of battery sets, which are daily becoming obsolete, is covered more in general than in detail. In all instances where possible, specifications are given in connection with the diagrams, which were obtained through the kind assistance of the various manufacturers. More up-to-date information on later sets can be supplied from time to time as the material becomes available, for which purpose the loose-leaf form of this book has been adopted. In connection with RADIO-CRAFT Magazine (which supplies the latest important news on the subject in proper page size to fit in this book) the book can be kept alive and up-to-date and be of inestimable value to the active Service Man.

No attempt is made to delve into the theory of radio, since this is not within the scope of a book of this type. There are many technical books covering the theory and practice of radio, from which the would-be Service Man can get a good elementary grounding on the subject. Therefore, it is here assumed that the reader has an adequate technical knowledge of the subject, although technicalities are avoided as much as possible and simple language is used throughout, covering mainly the practical rather than the theoretical aspect of the subject. For, after all, the Service Man is practical. He must go out in the field, diagnose the troubles in radio sets from the symptoms, and in a few minutes' time correct the defects. A man of theoretical knowledge only is at sea when up against a set, apparently in perfect order, but which does not work; and all his theory is of no avail without some background of practice. All the books in the world cannot give as much knowledge in this line of work as can be obtained by installing, servicing, and repairing a hundred sets of different types. Highly-trained engineers have been known to labor for hours on a set that would not work, only to find out later that the antenna was disconnected; a condition which would be instantly noticed by a less-technical but practically-trained Service Man. He who can give the quickest and best service will have the greatest number of satisfied customers and will build up the greatest reputation and monetary income. He who bluffs his way through and makes only temporary repairs in hopes of obtaining future work on the same sets, will soon find that his best customers have left him. A thorough knowledge of the work, backed by a few months' practice, together with a data book of this type containing information one cannot reliably carry in his head, should be the foundation of a successful servicing business, provided it is conducted in an honest manner. We hope that the readers will find this book as valuable as we are trying to make it.

Aside from his theoretical and practical knowledge of radio, the Service Man, like a practicing doctor, should be somewhat of a psychologist. Not that his psychology will have any effect upon the subject on which he is working, as in the case of the doctor, but he will come in contact with all kinds of people, the vast army of radio set owners, some of whom will look upon him with suspicion and presume that they are being swindled, no matter how fairly he treats them. He will be called upon to explain in detail everything connected with the work, and must not only repair the set, but give the highlyopinionated set owner a still higher opinion of his knowledge of radio. Of course, such cases should be handled tactfully, but just how is beyond the scope of this book, which makes no attempt to teach psychology. This can be learned better out in the field than from books. "Trouble-Shooting" in radio has many interesting and peculiar aspects.

The first section of this book is devoted to pointing out the weak spots in all kinds of radio sets and showing where trouble is likely to occur, how it can be located, isolated and repaired. Of course, the first and greatest symptom of a faulty radio set manifests itself in the loud speaker, which does not speak very pleasantly, or refuses to talk at all. This symptom is noticed by the set owner, who immediately telephones for the Service Man. From the owner's report of the set's behavior, the experienced Service Man can usually point his finger to the cause, since there is a cause for every effect. From this, he can select the necessary tools for making repairs, if any are required, and also any tubes, batteries, etc., which may be needed, and the job is shortly completed. The inexperienced Service Man, however, not being so keen at diagnosing from the meagre symptoms, must necessarily carry all his tools, testing apparatus, and spare parts, and make a longer job of it at greater expense to the owner. By making the tests systematically, the beginner can effect repairs quicker and soon acquire that apparently psychic insight into radio sets that the expert enjoys. The more proficient he becomes, the fewer tools he requires and the fewer tests he has to make. Therefore, we have endeavored to present, in a concise manner, a description of the various testing devices and tools that are indispensable to the beginner, as well as of great aid to the expert, and show how they are used in diagnosing set troubles. While many writings on trouble shooting trace cause to effect, we have attempted to trace effect to cause, which is the necessary procedure of the Service Man out on the job. As a concrete example, it is a simple matter to tell someone through the medium of a book that an open audio-transformer winding will stop the set from functioning, but it is an entirely different matter to trace the cause of a defective set back to the open transformer winding, when there are many other reasons why a set might stop functioning.

We believe that the vast collection of diagrams, forming the main bulk of the book, will be of help to all radio Service Men, and consequently we have made it as complete as possible without including diagrams known to be of little value. In modern manufactured radio receivers of somewhat inaccessible nature, an authentic diagram is almost indispensable in making tests, such as voltage and current readings and resistance measurements, for the difference in internal connections of various receivers is not apparent from the outside, and without the diagram mistakes are likely to be made.

We shall be pleased to receive suggestions and criticisms from those who are out in the field, and at the same time we wish to extend our thanks for the many suggestions submitted to RADIO-CRAFT by so many practical Service Men, which have been of great aid in preparing this book, and also to the manufacturers who have generously submitted data and diagrams concerning their products.

THE EDITORS

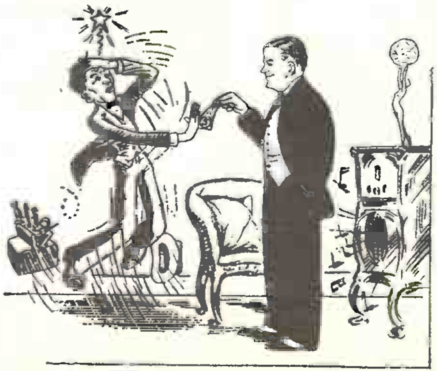

Sometimes the Service Man's money comes easy

CHAPTER I

SERVICE EQUIPMENT

SPEED and accuracy in set installation and servicing depend upon the skill of the Service Man and the tools and testing equipment at his command; the greater the skill, the less equipment required, and vice versa. Practice will strike for each his own balance between skill and equipment, and he can be judged accordingly. Good testing equipment will instil confidence into the customer and help largely to alleviate dissatisfaction. The nature of the work and type of set also dictates to some extent the equipment required. If a car is used, one can naturally carry a well-nigh complete set of tools and testing apparatus, but without the car, only the most necessary paraphernalia should be carried, the rest remaining at the shop for work too complex to be done at the customer's home. The list below gives the tools, supplies and instruments that every Service Man should have available:

(2) **Tools:**

One pair diagonal pliers
" pair long-nose pliers
" pair side-cutting wire nippers or pliers
" jackknife
" socket-wrench set
" pair test prods
" combination neutralizing and aligning tool
" automatic blow torch
" soldering iron
" can flux
" short, heavy screwdriver
" long thin screwdriver
" roll friction tape
" hand drill with assorted drills
" reamer
" coarse file
" sheet emery cloth
" fine file
" flashlight
" large piece of cloth

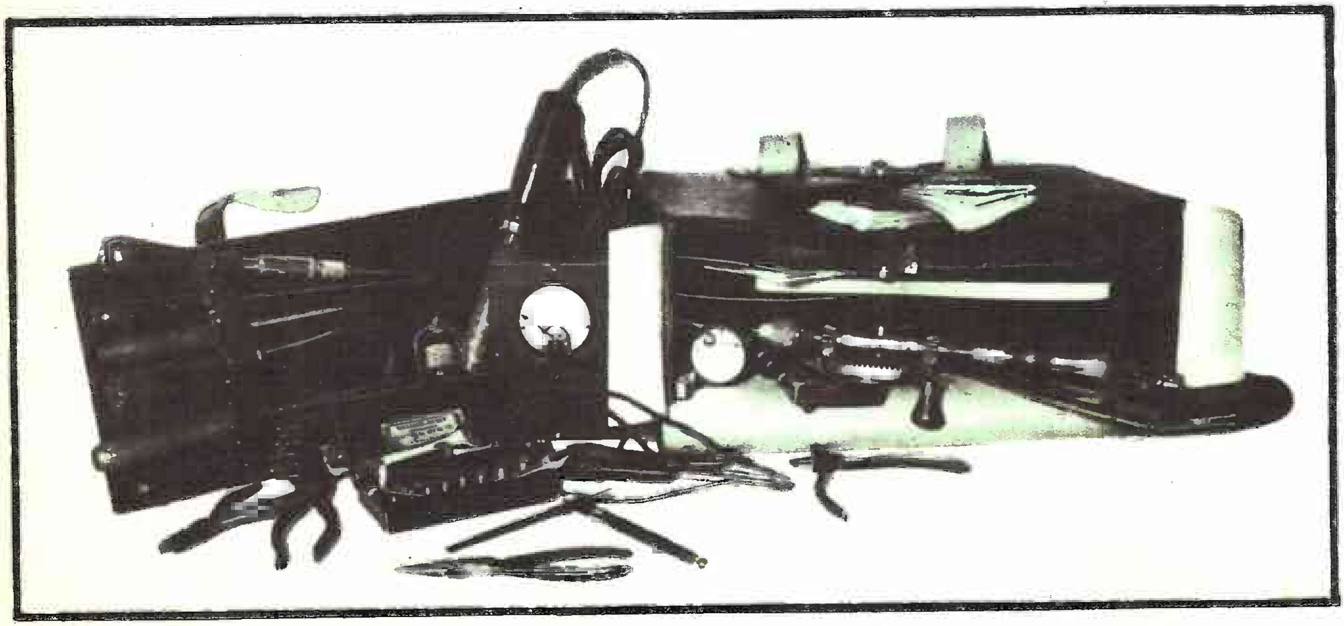

This illustration shows the radio Service Man's ideal tool and testing equipment. Note the convenience of the carrying case. Photo courtesy The Grenpark Co.

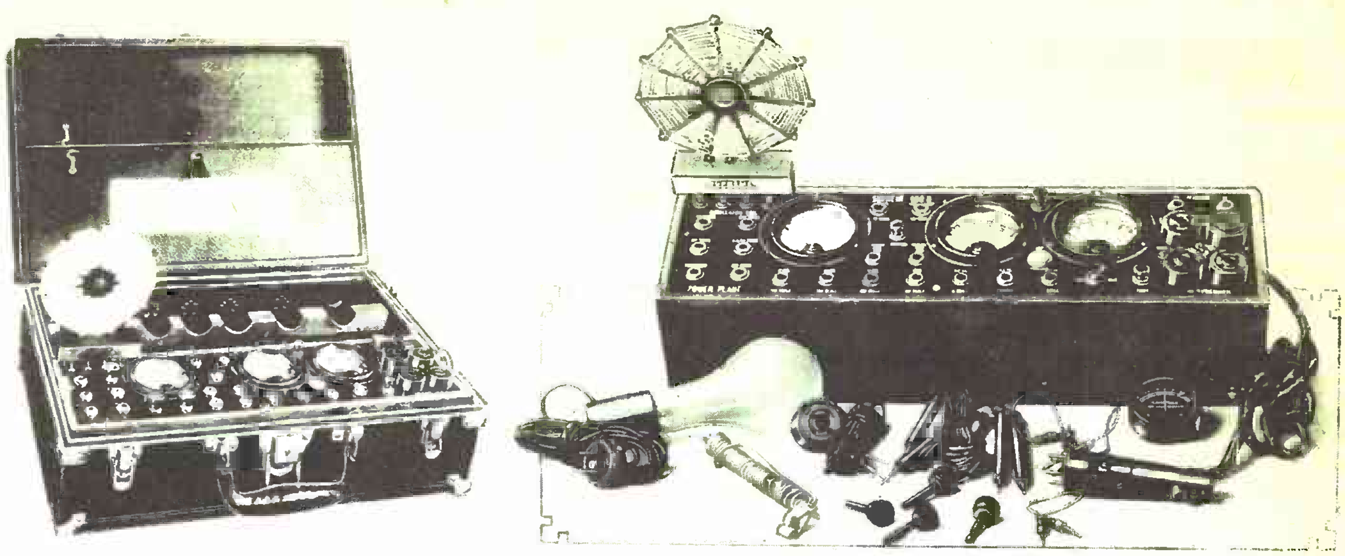

Fig. 1. - The Supreme Diagnometer is one of the most completely equipped testing apparatus available to the Service Man.

(3) Miscellaneous Parts: Assorted grid suppressors; center-tapped filament resistors; by-pass and filter condensers; variable high resistors; grid leaks; replacement A.F. transformer; phonograph pick-up adapter; rheostats; hook-up wire; a roll of bell wire; milenite tacks; insulated staples; replacement sockets; tube shield; trimming condensers; neutralizing condensers; tube adapters; R.F. choke; R.F. transformer; open and closed circuit jacks; filament switches; S.P.D.T. switches; phone plug; binding posts; soldering lugs; lock washers; assorted screws; aerial insulators; lead-in screweyes, hooks and insulators; lead anchors; filament ballasts; pilot lights; ground clamps; lead-in strips; lightning arrester; phone cord; 6 or 7-wire battery cable; battery clips, large and small; small knobs; cone apexes; complete set of various tubes; dummy neutralizing tubes; 45-volt "B" batteries; "C" battery.

(4) Instruments: One radio set analyzer, one hydrometer, one speaker unit, one headset or single receiver, one audio-modulated R.F. oscillator, one resonance indicator.

(5) The Radio Set Analyzer. This is one instrument that every Service Man should have, as it will permit the complete analysis of any type of radio set. There are several set analyzers or testers on the market, among which we find the Jewell, Hickok and Weston, and the Supreme Radio Diagnometer. Complete instructions on the operation and use of these instruments are furnished by the manufacturers and therefore we will describe their use here briefly.

(6) Each of these analyzers is in the form of a portable carrying case, as illustrated in Fig. 1, with a small compartment for carrying tools and miscellaneous parts for making minor repairs. They are more or less complete, having measuring instruments with multiple scales whereby, through switching arrangements, a rapid diagnosis of a radio set can be made. The analyzer can be used for measuring plate current of each individual tube, plate voltage, grid voltage, filament voltage, screen-grid voltage, power supply voltage, approximate resistance values, approximate capacity values, continuity tests.

(7) These measurements can be made with the tube in or out of the circuit. For example, by removing a particular tube from the set and placing it in the socket of the analyzer, and placing the plug connection of the analyzer in the empty socket of the set, measurements of actual operation conditions can be made while the set is in operation. Such a test on each tube of the set will soon reveal any defect.

(8) **The Supreme Diagnometer.** In addition to the above, this instrument contains a modulated radio-frequency oscillator for use in balancing R.F. amplifier circuits and also a resonance indicator. In effect, it is virtually a complete portable radio laboratory. This instrument was fully described in the February, 1930, issue of RADIO-CRAFT.

(9) **Charts.** Charts are furnished by the makers of the various instruments on which complete readings can be recorded and analyzed as a whole, after which corrective measures can be made if necessary. A copy of the chart should be left with the customer and the original filed for future reference. Fig. 2 shows a typical chart, giving readings taken on an Amrad Model 81 Receiver with a Jewell No. 199 analyzer.

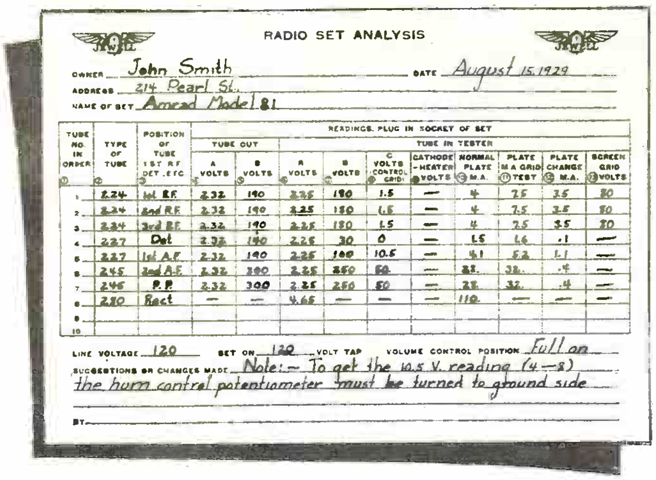

RADIO SET ANALYSIS

OWNER John Smith DATE August 15, 1929

ADDRESS 214 Pearl St.

NAME OF SET Amrad Model 81

TUBE NO. IN ORDER ①	TYPE OF TUBE ②	POSITION OF TUBE 1ST RF DET. ETC ③	READINGS, PLUG IN SOCKET OF SET									
			TUBE OUT		TUBE IN TESTER							
			④ A VOLTS	⑤ B VOLTS	⑥ A VOLTS	⑦ B VOLTS	⑧ C VOLTS CONTROL GRID	⑨ CATHODE-HEATER VOLTS	⑩ NORMAL PLATE M.A.	⑪ PLATE M.A. GRID TEST	⑫ PLATE CHANGE M.A.	⑬ SCREEN GRID VOLTS
1	224	1st R.F.	2.32	190	2.25	180	1.5	—	4	7.5	3.5	80
2	224	2nd R.F.	2.32	190	2.25	180	1.5	—	4	7.5	3.5	80
3	224	3rd R.F.	2.32	190	2.25	180	1.5	—	4	7.5	3.5	80
4	227	Det	2.32	190	2.25	30	0	—	1.5	1.6	.1	—
5	227	1st A.F.	2.32	190	2.25	100	10.5	—	4.1	5.2	1.1	—
6	245	2nd A.F.	2.32	300	2.25	250	50	—	22.	32.	.4	—
7	245	P.P.	2.32	300	2.25	250	50	—	22.	32.	.4	—
8	280	Rect	—	—	4.65	—	—	—	110.	—	—	—
9												
10												

LINE VOLTAGE 120 SET ON 120 VOLT TAP VOLUME CONTROL POSITION Full on

SUGGESTIONS OR CHANGES MADE Note:– To get the 10.5 V. reading (4–8) the horn control potentiometer must be turned to ground side

BY

Fig. 2 - Typical Service Man's Chart.

(10) **Continuity Tests.** One of the most common tests is the continuity test, for determining the condition of circuits or instruments. This test is usually made with a 4½-volt "C" battery connected in series with one of the voltmeters of the analyzer, with long flexible leads for connecting to the instrument or circuit under test. If the circuit is open, the meter reading will be zero; if closed, the reading will be full scale, or partially full, depending upon the resistance of the circuit - the scale reading giving a measure of the resistance of the circuit. Thus open circuits or short circuits can be easily located and values of resistances measured. This test will instantly show you if a by-pass condenser is shorted, or a resistance or coil is open. With the aid of the wiring diagram of the set being analyzed, trouble can quickly be located and the defective part repaired or replaced. We will have occasion to refer to continuity tests quite often in subsequent chapters. Fig. 3 shows a simple circuit for a continuity test.

(11) **Capacity Tests.** Large condensers having capacities from 0.1 mf. up are measured by connecting them in series with the 110-volt 60-cycle line and measuring the current. The current flow through the condenser is proportional to its capacity. Charts giving the capacity values for different current readings are usually furnished with the analyzers. This test is very useful for testing "B" eliminator, filter and by-pass condensers.

(12) **Modulated Oscillator.** A modulated oscillator (which is simply a miniature radio transmitting station) is useful in balancing or neutralizing sets. While a strong local broadcast station may serve the purpose of balancing, when no oscillator is available, the oscillator is more reliable and should be part of every Service Man's equipment. A simple modulated oscillator can be constructed by following the diagram. Fig. 4. This is a Hartley oscillator, which is self-modulated by the grid condenser and grid leak; the condenser building up a charge and discharging through the leak at audio frequency. The parts can be mounted in a suitable case with the coil so placed that it can be closely coupled to the first grid circuit coil of the set being adjusted.

Meter—Jewell 0-3 voltmeter D-C. Type 54.
Battery—3 Volt C Battery.

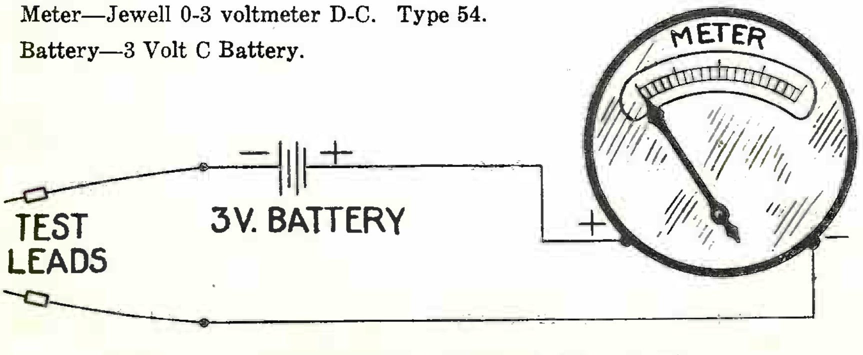

Fig. 3 - Circuit for Continuity Test.

(13) Resonance Indicator. While the fineness of tuning and balancing can be fairly well determined by ear, a more accurate method is to employ a resonance indicator. Such a device is indicated diagrammatically in Fig. 5. It consists of a low-range D.C. milliammeter for measuring the rectified output of the radio set. The output of the set is rectified by means of a type '99 tube with the grid and plate tied together, as shown. A variable resistor is shunted across the input to protect the meter from excessive currents, likely to be encountered when testing receivers that do not employ a dynamic speaker. The input should be equipped with a two-conductor telephone cord with clips for connecting to the set output.

(14) Dummy Tubes. Balancing a set requires the use of a dummy tube or balancing tube, which should be of the same type as those used in the set, in good condition and perfectly normal, except that one of the filament prongs is cut off and the internal filament wire resoldered to the shortened prong. This allows the tube to be inserted into the set without lighting its filament. An assortment of dummies for all types of tubes should be part of the Service Man's equipment, the most common being types '01A, '26, and '27. It is important that the elements inside are not jarred out of their normal position, or the internal capacity of the tube will change and its usefulness in balancing will be impaired. The tubes should be distinctly marked, to avoid mistakes.

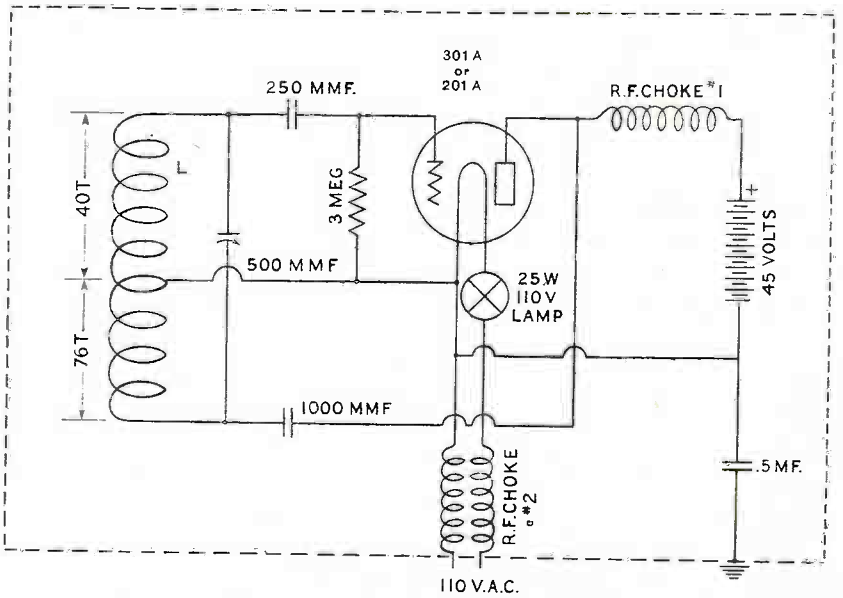

L. Wound on 1¼" Tubing No. 32 D. C. C. or No. 27E
R. F. Choke No. 1-200 T. No. 36 D. S. C.
R. F. Choke No. 2-400 T. No. 32 D. S. C., 200 T. per Slot, 2 Slots per Choke

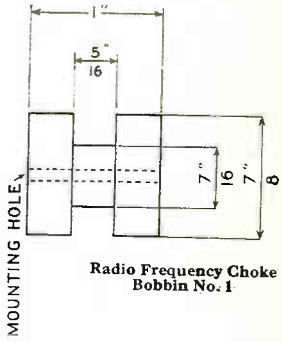

Radio Frequency Choke
Bobbin No. 1

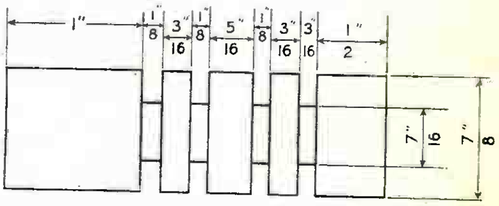

Radio Frequency Choke
Bobbin No. 2

Fig. 4 - Socket-Powered Audio-Modulated Oscillator.

(15) Balancing a Set. The receiver to be balanced should be connected up in normal operating condition, and either headphones or a resonance indicator used; either of which can be connected to the set output at the speaker or set chassis. The receiver should then be tuned to about 300 meters, or in between interfering stations if they are on the air. The oscillator is now put in operation, and its tuning condenser varied until it is in resonance with the set, as indicated by a reading of the resonance indicator or by sound in the headphones. The oscillator should be placed a distance from the receiver, so that the intensity is about equal to that of normal reception, and the set tunes sharply. The filament rheostat of the resonance indicator should be adjusted, together with changes in the distance between the receiver and the oscillator, so that the meter reads about two-thirds scale deflection. Maximum deflection, while tuning the oscillator, indicates maximum resonance between oscillator and receiver.

(16) The dummy tube is now placed in the last R.F. stage of the set, near the detector, in place of the tube formerly in that socket, and the neutralizing condensers are adjusted until there is no deflection on the resonance indicator, or no sound in the phones. This operation is then repeated with each R.F. stage, and when it is completed, the set is balanced. Note that the trimming condensers should be adjusted for maximum response and the neutralizing condensers for minimum response.

(17) It is well to balance the set at three or more points on the tuning dial, to insure a fine degree of balancing. To test the degree of balancing, replace the regular tube in the set and tune to a very low wavelength, then try forcing the set to oscillate by rocking the antenna trimming condenser or the volume control. If the set is well balanced, it will not oscillate.

(18) Condition of Set. The condition of the radio set should always be taken into account when looking for trouble, as many commercial sets have been tampered with by the set owner or by Service Men who have worked on it previously. We cannot always assume that the set is exactly in accordance with the specifications and circuit diagram given. Defective parts may have been replaced with others of incorrect values. A visual examination will usually reveal any discrepancies and they should be compared with the diagram and corrected before relying on test measurements. This is another important reason why an accurate history of service calls should be kept.

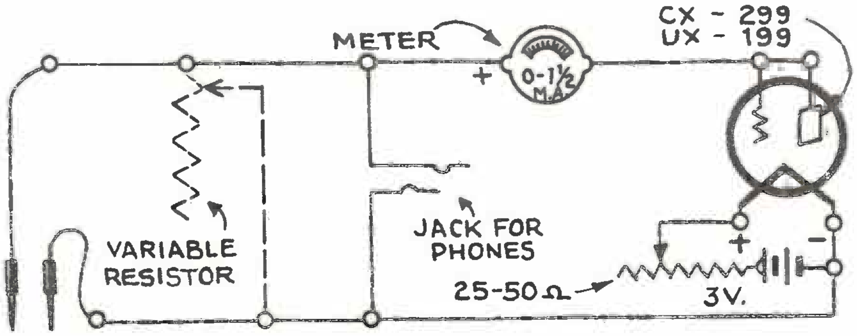

Fig. 5 - Resonance Indicator, Fleming Valve Type.

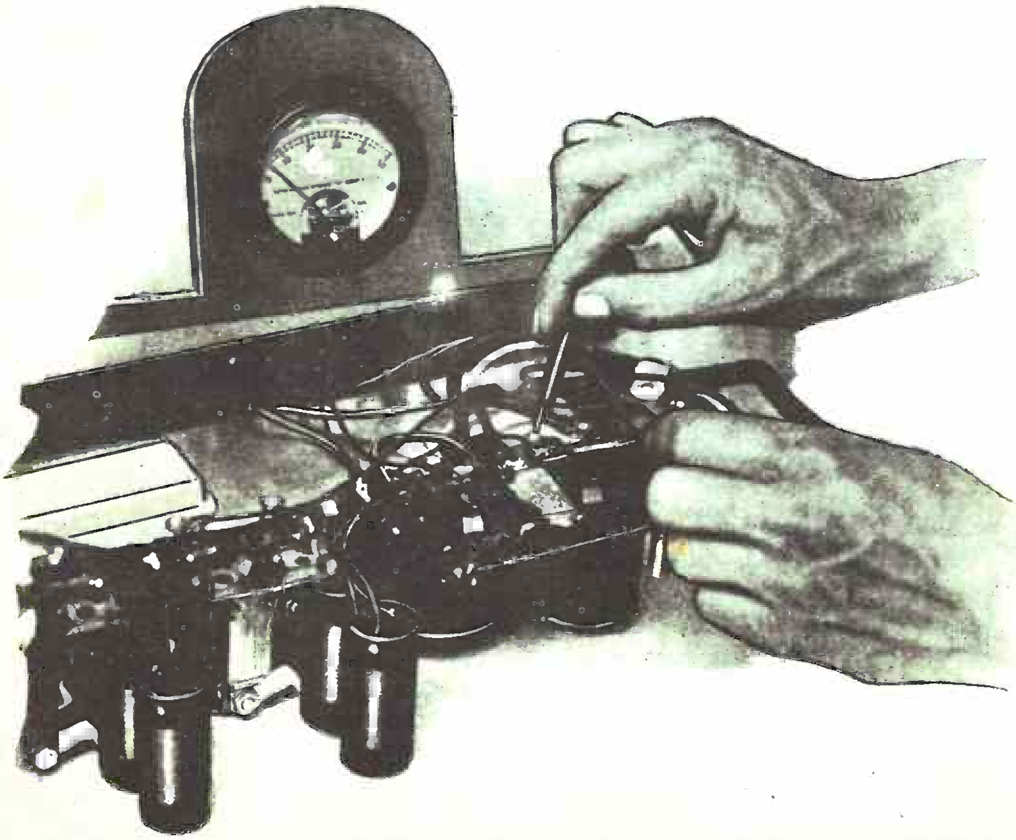

Testing a Circuit for Continuity. Note the use of the Test Prods. The Set shown is an Atwater Kent Model.

CHAPTER II

GENERAL SERVICE PROCEDURE

WHETHER installing or servicing, it is of utmost importance to please the customer, and all complaints should be attended to immediately. At the first complaint of trouble, inquiry should be made of the customer as to the type of set, the nature of the trouble, the behavior of the set before and after the trouble started, the age of the tubes, batteries and set, the condition and type of aerial used, and any further questions that the answers to these questions might involve. This information, together with the shop records of other service calls if any have been made on the same set, may reveal the cause of the trouble and enable a quick and immediate repair. The importance of this phase of the work cannot be too strongly stressed, since it may save much time and many unnecessary trips.

(2) Type of Set. Tracing trouble is always performed, consciously or unconsciously, by a classifying process, and the most general classification is in the type of set, there being four general types, namely:

Battery sets,
Battery sets with eliminators,
D.C. Electric sets,
A.C. Electric sets.

(3) Contrary to general opinion, electric sets are usually much simpler to service than battery sets, because they are inherently more compact and consequently of sturdier construction, and less vulnerable to mechanical injury. Battery sets, on the other hand, because of corrosion of battery connections, discharged "A" batteries, old "B" batteries, and frequent alterations and replacing of batteries by the inexperienced owner, are a source of many service calls. However, the battery type of set will first be described, in a general way, and we will take for our example a standard 5-tube tuned R.F. set. The circuit of Fig. 6 is typical of this type of set. Let us assume that the owner of this set claims that it will not work, and that is all the information that we have; we will proceed systematically to trace the source of the trouble.

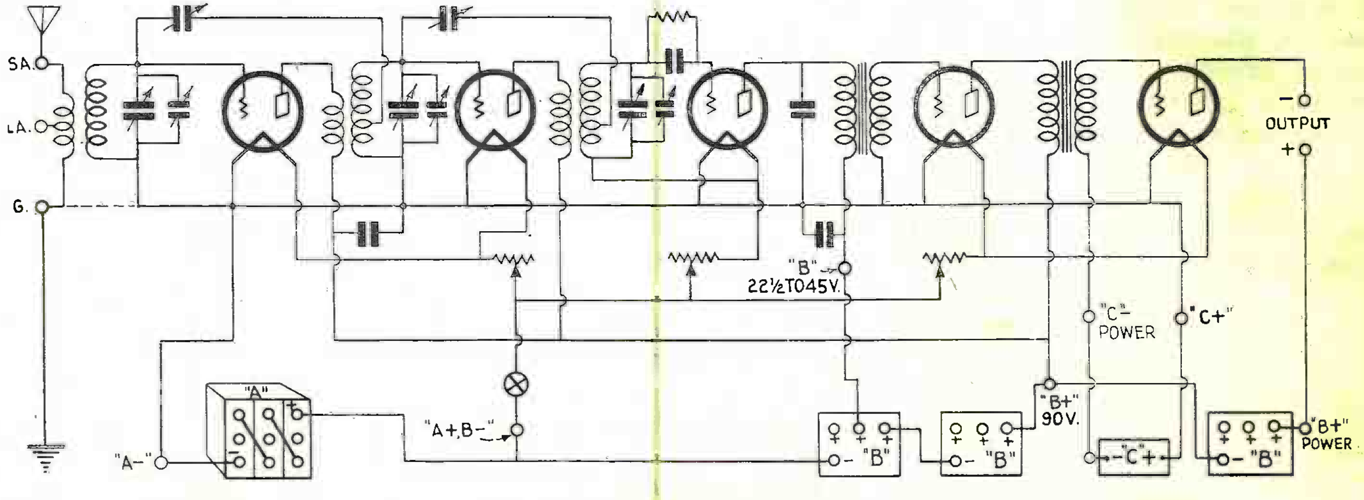

Fig. 6 - Typical 5-Tube Tuned R.F. Battery Receiver.

(4) General Survey. The experienced man can often tell, by the nature of the sounds emanating from the speaker, the cause of the trouble and make repairs immediately; but we will assume that there is no sound in the speaker. The first thing to do is make a general survey of the layout, and look for simple things first. Things so simple that they are overlooked have caused much trouble and unnecessary labor on the

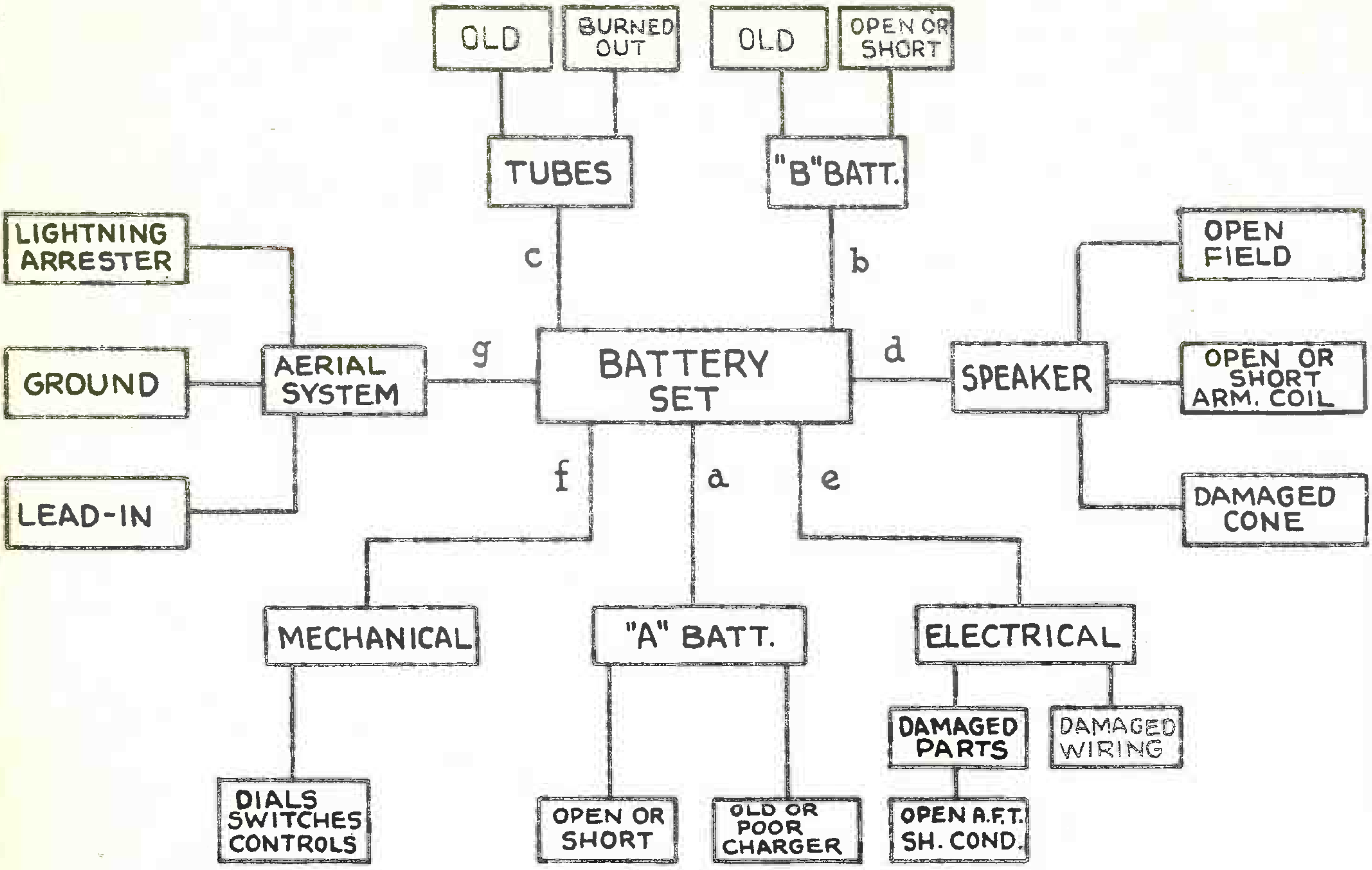

Fig. 7 - Trouble Chart for Battery Type Sets.

more complex parts of the set. For example, in one case a man worked nearly an hour on a set that failed to receive any stations, only to find later than an "S.O.S." call was on the air. Sometimes a tube loose in a socket, or in a dirty corroded socket, will cause trouble. The most common simple fault encountered is a disconnected or loose wire in some part of the battery, aerial, or speaker circuits, which may produce a dead, noisy, or weak set.

(5) Main Sources of Trouble. Further classification reveals that there are seven main sources where trouble may exist in the battery set. These are represented graphically in the chart of Fig. 7. Listing them in order of their importance, they are:

(a) "A" battery or circuit,
(b) "B" battery or circuit,
(c) Tubes,
(d) Speaker or circuit.
(e) Electrical system,
(f) Mechanical system,
(g) Aerial system.

Further classification of each of these seven sources are indicated in the illustration, but the first procedure is to localize the trouble in one, or possibly more, of these main branches, after which it may be traced down to one or more of the sub-branches. This is usually done by a process of elimination.

(6) "A" Battery or Circuit. A glance at the tubes will show whether they light up brightly, or not, after the set is turned on. If they light brightly, the "A" battery connections should be examined to see that they are not reversed, for a reversed "A" battery will produce a very weak set. If the connections are correct, and the tubes light, we can eliminate branch (a) of our chart. If the tubes fail to light or are very

dim, we must examine this branch and test the "A" battery with a hydrometer or quickly short the "A" battery and note if a powerful spark is produced. If the battery tests fully charged, examine the battery clips, which may be corroded; also the filament switch, rheostats, and ballast resistors (if any are in the circuit.) If the battery is discharged, examine the battery charger. See that it is not reversed and that it is charging properly and well connected to the lighting line. Note the amount of electrolyte and add distilled water if necessary. If the charger is in good condition, examine the "A" battery circuit for shorts, or failure to turn completely "off" by the filament switch or rheostats. The age and care of the battery will also give some indication of its condition. If beyond salvation, replace it. If branch (a) is found in good condition, examine branch (b).

(7) The "B" Battery or Circuit. A quick check of the "B" battery is to disconnect the high-voltage lead and listen for a loud click in the speaker when it is re-connected with the set turned on. A strong click indicates a good "B" battery, and vice versa - assuming the speaker is in good condition. The age of the "B" battery will indicate if it needs replacing or not, but if it is fairly new, measure the voltage with the set turned on. If the voltage is low, examine the set before installing a new set of batteries, for a shorted by-pass condenser in the set has ruined many a new set of "B" batteries.

Usually the battery nearest the negative or filament side of the circuit runs down first, because of the greater drain placed on it by the detector tube. Temporary operation can sometimes be obtained by exchanging it with the last one. A large by-pass condenser, about 2 mf, connected across the "B" battery, also helps.

With the "B" batteries in good condition and all the connections examined and tested to make sure that the voltage is applied to the tubes, we can pass on to branch (c).

(8) Tubes. Tubes often cause trouble, but the trouble is easy to rectify. If they are burned out from old age or damaged by mechanical jar, they must be replaced with new ones. Otherwise, the circuit should be examined before inserting new tubes, as the fault may be in the connections. The sockets should be cleaned by forcing the tubes in and out. Sometimes the tubes light normally but the filaments have lost their ability to emit sufficient electrons, or are "deactivated." A couple of good spare tubes should be used for comparing them by trying them in one socket after another, as it is seldom that all tubes in a set become weak at the same time, and the one or more weak tubes can be found. Of course, a set analyzer will instantly indicate the condition of a tube; if the plate current is low with the proper plate, grid, and filament voltages applied, the tube should be discarded, or reactivated, if possible, in a tube reactivator. Study Chapter IV for further information on tube analysis and tests.

(9) Speaker or Circuit. Disconnecting and connecting the "B" battery lead (as described in connection with the "B" battery or circuit) should give a click in the speaker if the speaker is in good condition. Otherwise, disconnect the speaker and test it for continuity, or quickly touch its terminals across a portion of the "B" battery and listen for a click. If the speaker is found impaired in any way, test it in accordance with the directions given in Chapter V. Otherwise, eliminate this branch of the system and examine the next one. Tapping the detector tube with the finger should give a clear ringing sound in the speaker, if the audio amplifier and speaker are in good condition. Comparing the speaker with one known to be good will also reveal its condition.

(10) The Electrical System. The electrical system of the set comprises the radio-frequency amplifier, the detector, and the audio-frequency amplifier; the most common source of trouble being an open winding in one of the audio-frequency transformers (usually caused by soldering flux employed in their manufa ture, which eats away the

fine wire) a burnt-out resistor, or a short-circuited by-pass condenser. The last-named may ruin the "B" batteries, as mentioned before under the "B" battery heading. Continuity tests across all the transformer windings, chokes and condensers, will instantly reveal any trouble from these sources. Defective parts should be replaced with new ones. A headset connected in the plate circuit of the detector, will show that the radio-frequency amplifier and detector are in good condition if stations are heard, and thereby localize the trouble in the audio amplifier.

If stations are not heard in the phones, and tapping the detector tube produces a ringing sound, in the speaker, the trouble will probably be found in the radio-frequency amplifier or aerial system. Continuity tests should then be made on the R.F. transformers for opens, and the tuning condensers examined and cleaned if necessary. If trouble is found in this branch, a detailed analysis can be made in accordance with the instructions given in Chapters VI and VII.

(11) **The Mechanical System.** This part of the set receives all the mechanical wear and sometimes gets out of order. The trouble being of a mechanical nature, rather than an electrical one, is easily corrected. Under this heading we have the tuning condensers, dials, volume control, rheostats, filament switch, loud-speaker cord, and any other part that undergoes mechanical wear. A visual examination will usually reveal trouble from these sources. Electrical continuity tests of the manually-operated instruments will also reveal defects. It is better practice to replace defective instruments of this nature than to try to repair them.

(12) **The Aerial System.** While we analyze this branch of the system last, a hasty examination of the aerial and its associated components should be made before thoroughly going over the entire set. At least one can tell whether the aerial is down or not, without making elaborate tests. Having eliminated the other branches of the system, and traced the trouble to the input or aerial and ground connections, we can make a detailed analysis of this branch by following the instructions given in Chapter VI under aerials.

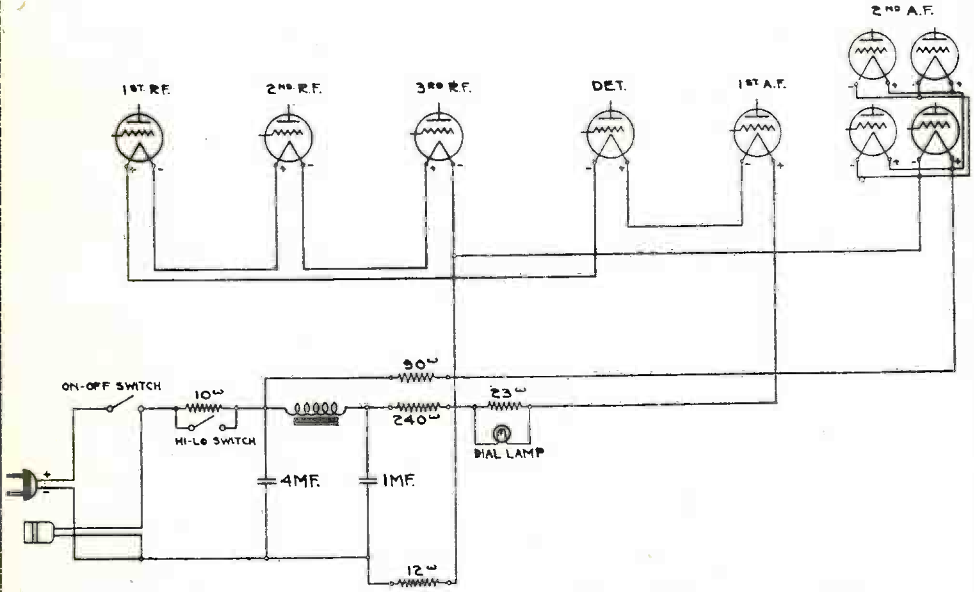

Fig.8 - Filament Circuits of a 110V. D.C. Set.

(12) **Battery Sets with Eliminators.** The same general procedure for testing battery sets employing "A" or "B" battery eliminators, or both, should be followed as just described in connection with battery sets. In fact, the same chart of Fig. 7 may be used. If trouble is located in branch (a) comprising the "A" battery or circuit, testing methods described in Chapter III should be followed. Likewise, if trouble is located in branch (b), covering the "B" battery system, instructions on "B" battery eliminators should be studied. Since this information is fully covered in separate chapters, we will not go into it in detail here.

(13) **D.C. Electric Receivers.** These receivers differ from the battery type mainly in the manner by which the plate and filament supply voltages are obtained, and consequently the same testing procedure can be followed as with the battery type. In these receivers, the filaments are connected in series and supplied directly from the D.C. lighting line through a suitable resistor. Since the maximum voltage obtained from the

line is from 115 to 125 volts, a number of output tubes connected in push-pull or parallel are usually employed in the amplifier to get sufficient undistorted output.

(14) Filament Wiring. As an illustrative example, Fig. 8 shows the filament wiring of the Stromberg-Carlson "No. 638" Art Console receiver for D.C. operation. In this receiver the first, second, and third R.F. amplifier tubes, the detector and first audio amplifier tubes, are of the '01A type and connected in series with the pilot light and resistance; the whole being connected to the line through a filter system. The output stage consists of four type '71A tubes with filaments connected in parallel and connected across the line through a 90-ohm resistor, as shown.

(15) Testing Filament Wiring. In testing the filament circuit of the D.C. receiver, it is obvious that if one of the series filament tubes of the '01A type in the diagram, Fig. 8, burns out, the circuit will be open and the others will go out; replacing the burnt-out tube will cause all the others to light. It is well to test the line voltage at the filament terminals to make sure that the series resistors, choke and pilot lamp are in good condition. Voltages at the set sockets can be measured with a set analyzer, but only while the set is in operating condition with all tubes lit. If the tube is burnt-out, from excessive line voltage, the "Hi-Lo" switch, shown in the diagram, should be opened, thus placing an additional 10-ohms in series with the set with consequent voltage reduction.

(16) Power Tube Filaments. The four '71A power tube filaments in this set are connected in parallel and, since they are all fed through one series resistor, if one of these tubes burns out or is removed from the socket, the voltage across the others will rise to a dangerous value and burn out all the others unless the set is immediately turned off. Therefore, it is very important to turn the set off before removing any of these tubes; furthermore, do not turn the set on again until good tubes have been placed back in the empty sockets. Chapter III gives further information of value in this connection.

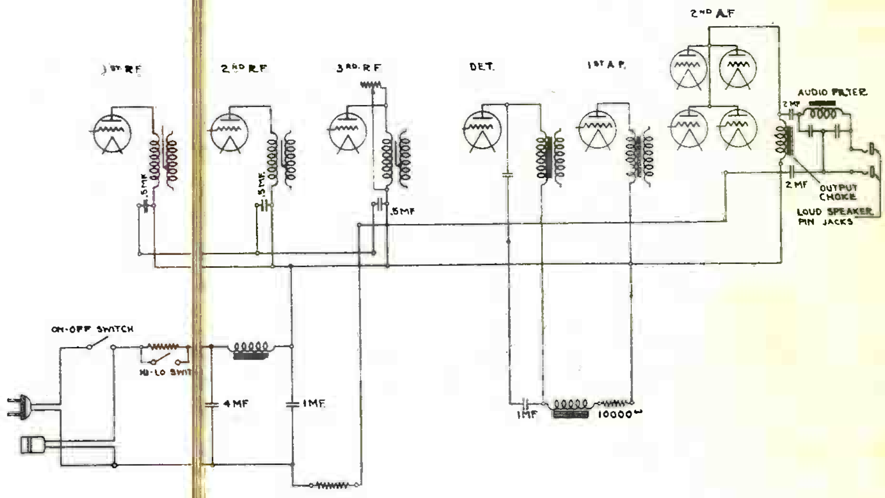

Fig.9 - Plate Circuits of a 110V. D.C. Set.

(17) Plate Supply. Fig. 9 shows a schematic diagram of the plate circuits of this set. Note that all tubes are fed by the maximum line voltage (neglecting the slight voltage reduction caused by the filter choke.) A simple voltage test at the socket will indicate whether there is failure in the plate supply. If so, continuity tests across the choke, series resistor and switch, with the line-plug out, will probably locate the cause. A shorted filter condenser may cause a fuse to blow. The condensers should be tested and replaced if necessary before replacing the fuse. Further information may be found in Chapter III under D.C. "B" eliminators.

(18) A.C. Electric Sets. These sets differ from those previously described mainly in the type of tubes employed and the method of heating their filaments. The filaments in these sets are heated by means of a step-down transformer connected to the A.C. line, and it is consequently a simple matter to trace failure of any part of the filament circuits. Two methods are employed; in one, the filaments are heated by the alternating current and the grid returns find their way back to the electrical center of the filament, by means of a center-tapped resistor placed across the filament, or

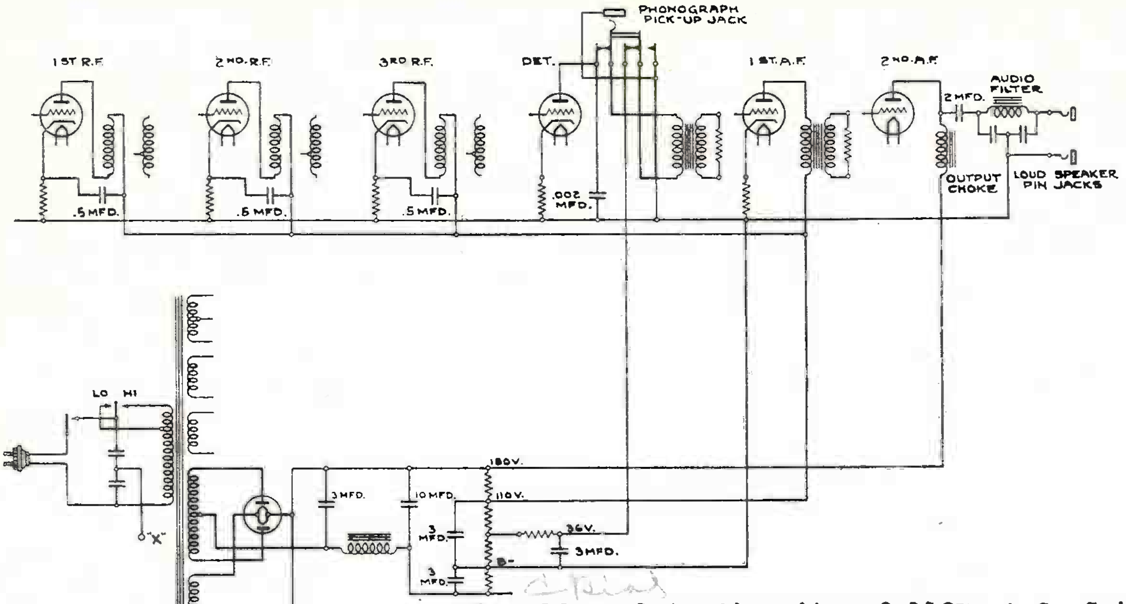

Fig. 10 - Plate Circuits of 110V. A.C. Set.

by a center tap on the filament transformer winding. If the tap is not at the exact electrical center, hum will be introduced. The type '26 A.C. tube is used in this manner for both radio- and audio-frequency amplifiers. The various power tubes for the output stages in the radio amplifier are also connected in this way.

In the other method, a heating element is used to heat a cathode which is not in electrical contact with the heater, but is brought by the heater to a sufficient temperature to cause electrons to be emitted from it; the cathode serves as a filament and is considered as such in the various circuit diagrams. This type of tube, the '27, is used for the detector in virtually all A.C. sets, and in many cases also used for the radio- and audio-frequency amplifiers. The reader is referred to the special Chapter IV on tubes for more detailed information.

(19) Plate Supply. The plate supply of A.C. sets is obtained by the same basic method as in battery sets employing "B" eliminators; the main difference being that, in the A.C. set, the "eliminator" is usually an integral part of the set and cannot as easily be isolated, removed and repaired.

(20) A.C. Power Supply. A typical example of the power supply system for an A.C. set is illustrated in the schematic diagram of Fig. 10, which shows the power supply of the Stromberg-Carlson "Nos. 635 and 636" receivers. If the initial tests reveal a failure in the power supply, as indicated by absence of plate voltage, the trouble may be caused by a defective rectifier tube, burnt-out filter choke, punctured filter condensers, or open voltage divider. This latter device, indicated as a group of resistances at the extreme lower right of the diagram (Fig. 10) may cause excessive plate voltage on some of the tubes, should the lower or negative end of it be open. This is a frequent occurrence and, if the resistance values and current carrying capacities of the voltage divider are known (as indicated on the diagram of the specific set) a new resistor of the same value should be inserted. Further reference to power supply equipment will be found in Chapter III.

(21) 25- and 60-Cycle Sets. It is well to check the frequency of the power supply, especially when making installations, and make sure that the set is designed to operate on the frequency available. While 60-cycle supply is the most common, in some localities (especially near Buffalo, N.Y., and in many parts of Canada) 25-cycle and sometimes 40-cycle current is in general use. It is ruinous to attempt to operate a 60-cycle set on a 25- or 40-cycle line, but a 25- or 40-cycle set may be safely operated on a 60-cycle line. The 25-cycle set may be operated on a 40-cycle line, but not vice versa.

CHAPTER III

POWER-SUPPLY SYSTEMS

IN the course of time the service man will encounter a wide variety of socket-power-supply systems - both filament "A" supply, plate "B" supply and "C" supply units - as indicated by the various diagrams in this book. While the circuits differ widely, and the apparatus employed and combinations also differ, trouble shooting in each system is essentially the same, and can be boiled down to a few simple tests of the various parts. Sets employing batteries for the "A", "B" and "C" supply were sufficiently covered in the second chapter of this book, and will not be included in this chapter; only power-supply systems in connection with the house-lighting line, both A.C. and D.C., will be included. These may be divided into :

(a) Eliminators for battery sets,
(b) Power-Supply Systems for A.C. Electric Sets.

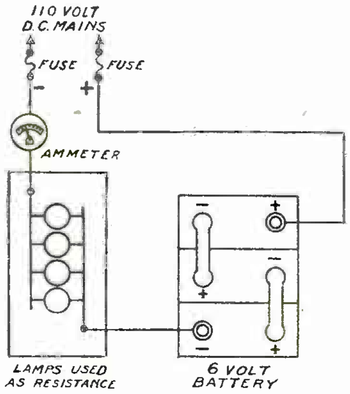

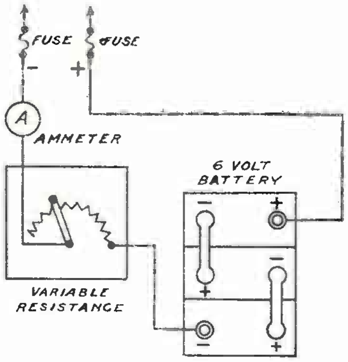

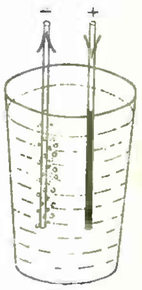

Fig. 12 - (left) Charging a 6-volt battery from a 110V. D.C. line using a variable resistance.
Fig. 13 - (center) Charging a 6-volt battery using a lamp bank resistance.
Fig. 14 - (right) Testing the polarity of the D.C. line with salt water.

The first group will include battery chargers as well as eliminators, both A.C. and D.C. types, for use with battery sets. The second group will include power packs and power supply systems for A.C. electric sets. Both groups will be subdivided as we proceed with the discussion. A voltage measurement on any of these devices will reveal an abnormal condition. Current output measurement will show whether the fault is in the set or in the power-supply device. In this chapter we will assume the defect, if any, to be in the power-supply device.

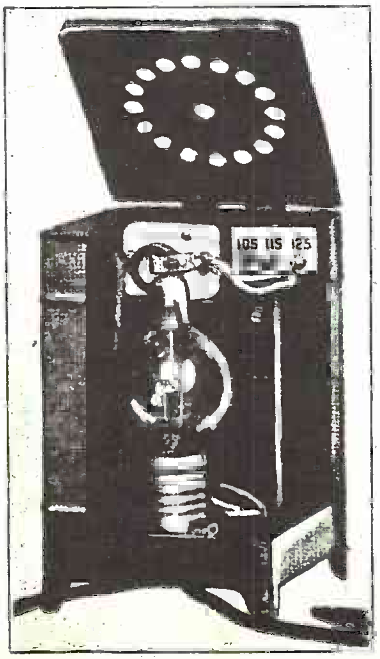

Fig. 15 - (left) Tungar charger.
Fig. 16 - (center) Vibrating reed charger.
Fig. 18 - (right) Dry disc charger.

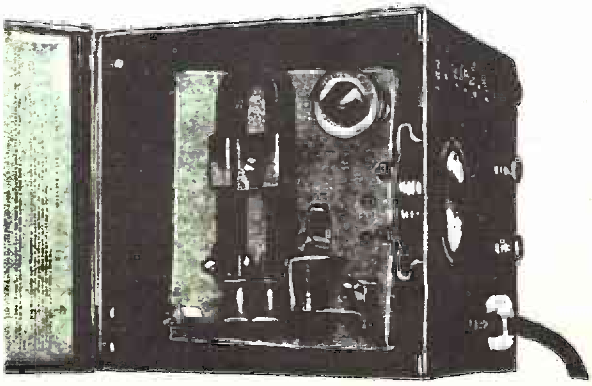

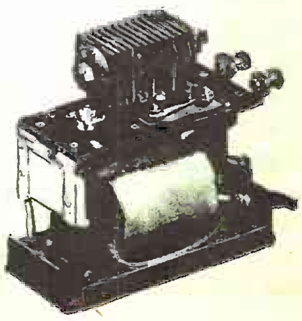

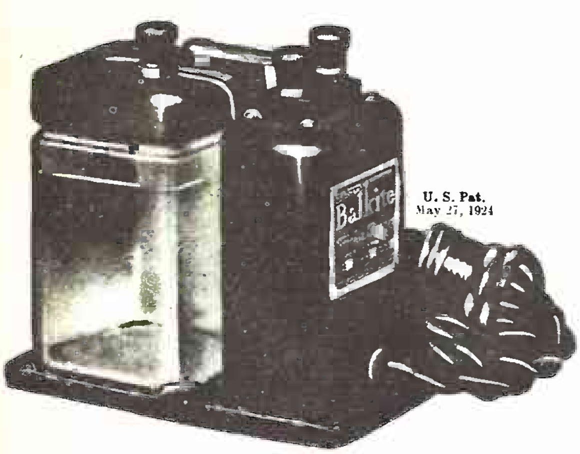

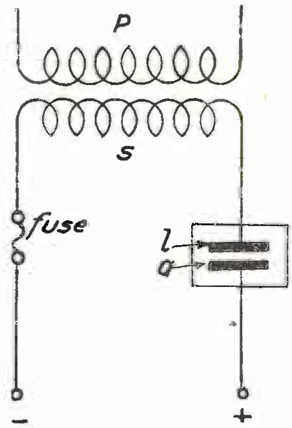

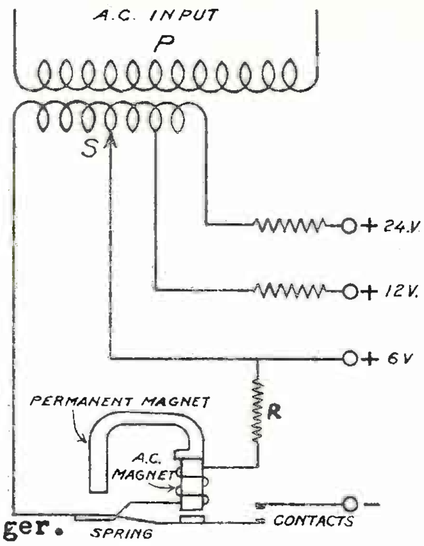

Fig. 17 - (left) Electrolytic charger.
Fig. 21 - (center) Diagram of electrolytic and dry-disc charger.
Fig. 20 - (right) Diagram of half-wave vibrating reed charger.

(2) <u>110V. D.C. Battery Chargers.</u> This type of charger consists merely of a resistance in series with the battery under charge; the wole being connected to the 110-volt D.C. line. See Figs. 12 and 13. Tracing trouble, therefore, consists merely of checking the continuity of the circuit and its polarity. Trickle chargers usually have an ammeter which indicates the polarity and amount of charge. Trouble is usually found in the connections to the battery, which become corroded in time, and introduce resistance into the circuit. In some sets, automatic relays are employed to disconnect the charger from the line when the set is turned on. Through wear and sparking, the contacts in the relays fail to close and the charger circuit remains open. In lieu of a polarized meter, the line polarity can be determined by dipping the two terminals in water containing a few grains of salt; violent bubbling will take place around the negative wire. See Fig. 14.

(3) <u>110V. A.C. Battery Chargers.</u> These chargers may be of the tungar-tube type, the vibrating-reed type, the electrolytic rectifier type or the dry-disc rectifier type; the latter two being used mainly for trickle chargers. The illustrations of Figs. 15, 16, 17 and 18 show these types of chargers. Figs. 19, 20 and 21 show the connections, respectively, In addition to the causes of troubles mentioned in connection with D.C. battery chargers, we have a likely source of trouble in the rectifying device. In the tungar type, the filament may burn out, or a defective tube may be encountered. The life of this type of tube is uncertain, even though its filament may be intact. This is true also of dry-disc rectifiers and vibrating rectifiers, which in time require new contact points. Failure in charging may also be due to an open transformer winding, or a dirty or loose tube socket. Some chargers have connections for charging storage "B" batteries, with consequent troubles from corroded connections to the battery.

(4) <u>110V. D.C. "A" Eliminators.</u> These consist merely of a network of resistors designed to give the required voltage drop, together with a choke coil and condensers for filtering purposes, as indicated in Fig. 22. In some cases the tubes are wired in series, as was illustrated in Fig. 8. In this case, the current drain from the line is much less than when lighting the tubes in parallel. In the latter case (Fig. 22) an output voltage of 6-volts is usually desired; but the voltage remains at this value only when the set is turned on and all tubes lit; because the least change

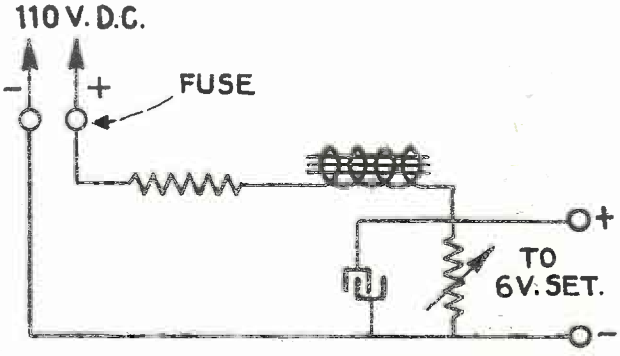

Fig. 22 - Circuit of 110V. D.C. "A" battery eliminator.

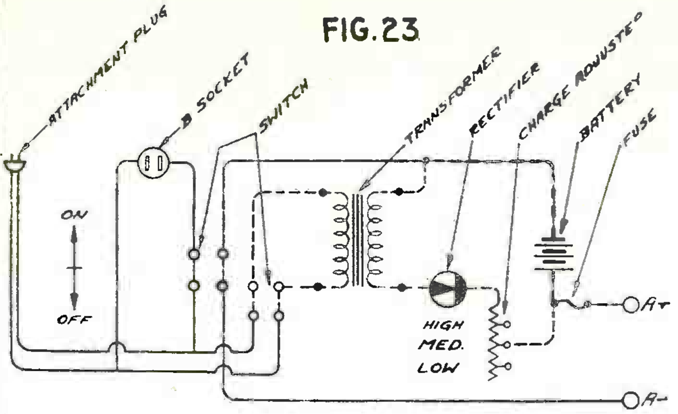

FIG.23

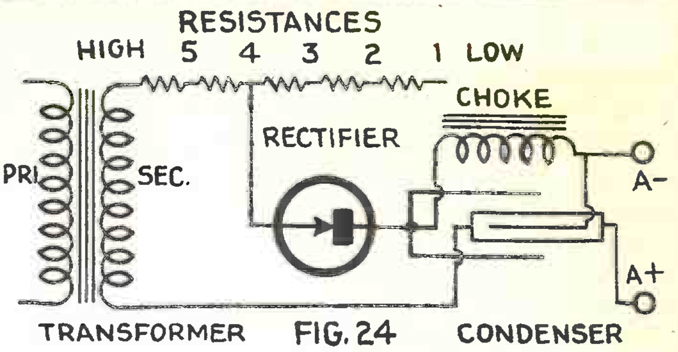

FIG. 24

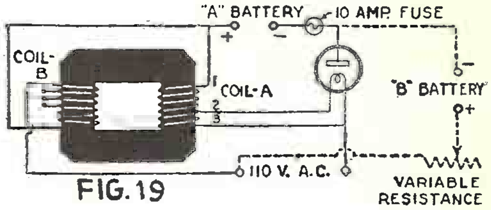

FIG.19

Fig. 19 - Diagram of Tungar Charger.
Fig. 23 - Diagram of Philco Socket Power "A" supply.
Fig. 24 - Diagram of Balkite socket Power "A" supply.

in current drain charges the resultant voltage drop, causing the output terminal voltage to fluctuate widely, and endanger the tubes. For this reason, no tubes should be removed from the set without first turning off the switch, and the switch should not be turned on again until all good tubes are in the set. However, the variable resistors give a wide range of voltage control, and should be carefully adjusted. Simple continuity tests will indicate the condition of this device. If a fuse blows, because of a short in the eliminator, test the filter condensers for continuity before connecting the outfit in service again.

(5) 110V. A.C. "A" Eliminators. Such a device is naturally more complex than the D.C. type, since it comprises a power transformer, a rectifier, a filter system and, in some cases, a storage battery. The last arrangement cannot be considered a real battery eliminator, but is merely a combined storage battery and trickle charger. Fig. 23 shows the diagram of the Philco Socket Power "A", which is representative of this type in which no filter system is employed, the storage battery serving for this purpose. In the other types, no battery is used. Fig. 24 shows the diagram of the Balkite "A" Socket Power Unit, which is typical of this. Both of these employ electrolytic rectifiers. We shall describe each in detail.

(6) "A" Power Units With Battery. Troubles in this unit are similar to those occurring in regular batteries and chargers. In these, a comparatively smaller battery is used (about 40-ampere-hour) , and it is continually being charged while the set is in operation. Hum may be produced if the battery is operated near or in a discharged condition; in which case the condition of the battery and rectifier should be examined. If the rectifier electrolytic has evaporated, more should be added. Loose binding posts and connecting cables are also a source of trouble. The control resistor also may become loose, dirty, or worn, and require cleaning or replacing. Electrolytic or dry-disc rectifiers are usually employed in these units. These need replacing in time, depending upon the length of time they have been in service.

(7) "A" Power Units Without Battery. As shown in Fig. 24, these units comprise a step-down transformer, control resistance, rectifier, choke coil and filter condenser. Since the output voltage is low (about 6 volts) and the current high, the condenser may be designed for low voltage, but it should have an enormous capacity to produce any appreciable filtering effect. The output voltage in these units may vary because of a defective rectifier or leaky filter condenser. The resistance-control allows for adjustment over wide limits, however, and a slight readjustment is usually sufficient.

(8) Series-Filament "A" Supply. If type '99 tubes are used and connected in series, a current of 60 milliamperes is sufficient to light them, and this may be obtained from the "B" supply. If '01A tubes are used in series, a current of ¼ ampere is

required, which is too great to be taken from the usual "B" supply, so a separate rectifier is necessary. These systems are not in general use (except for 110V D.C. systems) and need not be described in detail. Trouble shooting resolves itself merely into testing the rectifier and continuity of the circuits, remembering that "C" voltages are obtained by returning the grid-circuit leads to different points of the filament circuit; each point, of course, being at a different potential.

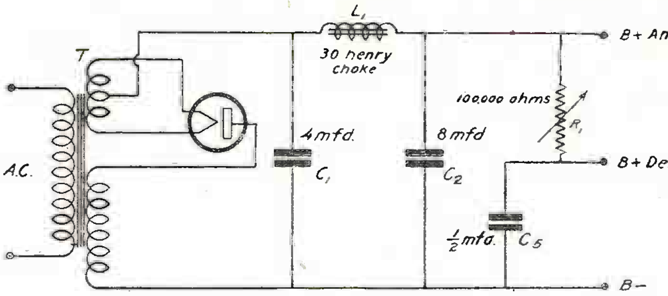

Fig. 25 - "B" Power Supply using half-wave filament type rectifier.

(9) "B" Battery Eliminators. We shall limit this discussion to "B" battery eliminators operating from the A.C. line, as the D.C. type were covered sufficiently in Chapter II. So far we have talked about rectifiers, but made no distinction between half-wave and full-wave ones. In the former, every other half-cycle of the alternating current wave is used, resulting in a D.C. output with a 60-cycle pulsation, which is smoothed out by the filter. In the latter (which is in effect two half-wave rectifiers operating alternately or "out of phase") each half-cycle is used; every other one being in effect reversed, giving a 120-cycle pulsation in the D.C. output. The 120-cycle pulsation is easier to filter than the 60-cycle pulsation and a smaller filter system may be used; however, the sound reproducer is more sensitive to the 120-cycle tone than to the 60-cycle one, and the amount of hum produced is about the same in each case. Filament-type, gas-type, and dry-disc type rectifiers are most generally used.

(10) Filament-Type Rectifiers. Figs. 25 and 26 show typical circuits of half-wave and full-wave filament rectifiers, the latter consisting of two half-wave rectifiers so connected as to obtain full-wave rectification. The type '81 tube is a typical half-wave rectifier. Fig. 27 shows a full-wave rectifier circuit employing a full-wave rectifier, such as the type-'80 tube. A comparison of these three circuits will give a fundamental idea of the basic principles involved, as they are all fundamentally the same and subject to the same defects. Like defects or troubles produce like symptoms in all.

(11) Gas Rectifiers. These are more generally used for commercial "B" eliminators. The Raytheon "B" and "BH" tubes are typical examples. Fig. 28 shows circuits of the Majestic "B" eliminators employing a full-wave gas-type rectifier. Analysing these, we find them composed of input transformer, buffer condensers, rectifier, filter condensers and chokes, and voltage-control resistors. A condenser, connected between one side of the 110-volt line and ground, is also indicated. The two buffer condensers, connected across each half of the transformer secondary, have a capacity of

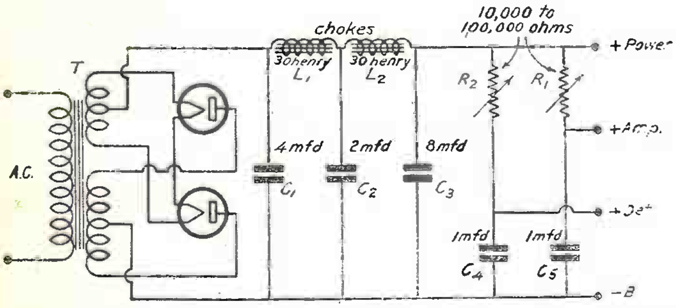

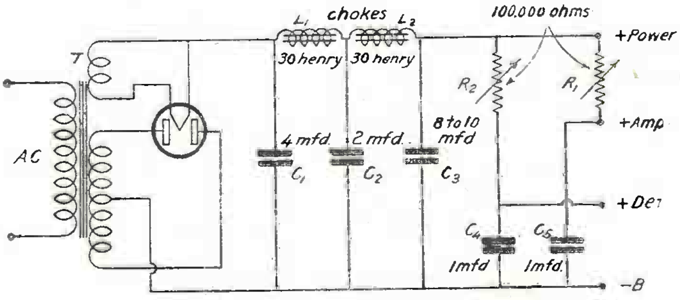

Fig. 26 - "B" Power Supply using two Half-Wave Filament Type Rectifiers for Full-Wave Rectification.

Fig. 27 - (right) Full-Wave Rectifier Circuit for "B" Supply using Filament Type of Tube.

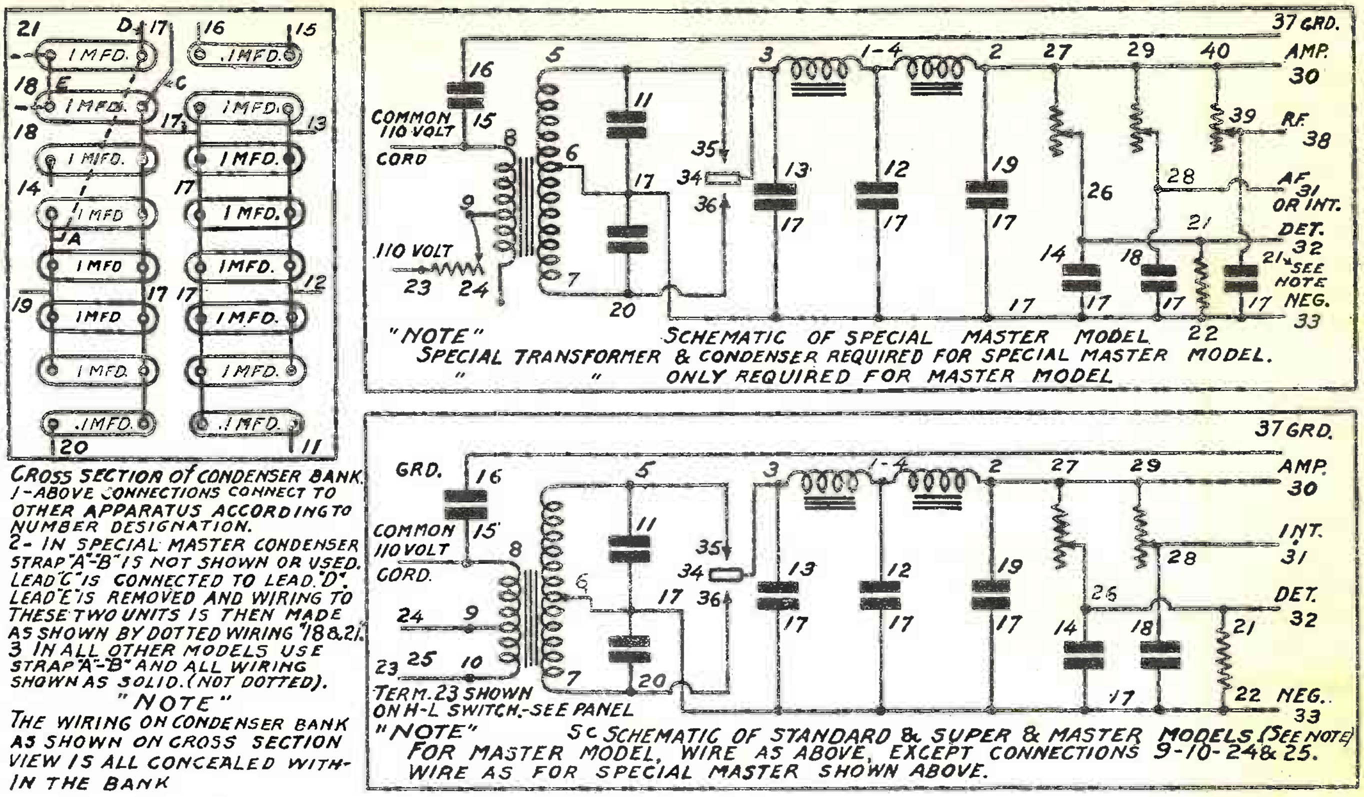

CROSS SECTION OF CONDENSER BANK.
1- ABOVE CONNECTIONS CONNECT TO OTHER APPARATUS ACCORDING TO NUMBER DESIGNATION.
2- IN SPECIAL MASTER CONDENSER STRAP "A"-"B" IS NOT SHOWN OR USED. LEAD "C" IS CONNECTED TO LEAD "D". LEAD "E" IS REMOVED AND WIRING TO THESE TWO UNITS IS THEN MADE AS SHOWN BY DOTTED WIRING "18 & 21".
3 IN ALL OTHER MODELS USE STRAP "A"-"B" AND ALL WIRING SHOWN AS SOLID. (NOT DOTTED).
"NOTE"
THE WIRING ON CONDENSER BANK AS SHOWN ON CROSS SECTION VIEW IS ALL CONCEALED WITHIN THE BANK

"NOTE" SCHEMATIC OF SPECIAL MASTER MODEL
SPECIAL TRANSFORMER & CONDENSER REQUIRED FOR SPECIAL MASTER MODEL.
" " ONLY REQUIRED FOR MASTER MODEL

"NOTE" Sc SCHEMATIC OF STANDARD & SUPER & MASTER MODELS (SEE NOTE)
FOR MASTER MODEL, WIRE AS ABOVE, EXCEPT CONNECTIONS 9-10-24 & 25. WIRE AS FOR SPECIAL MASTER SHOWN ABOVE.

Fig. 28 - Diagram of Majestic "B" Eliminators.

o.1-mf each. They are used to absorb or prevent any high-frequency parasitic oscillations across the rectifier tube and are used only with gas-type rectifiers.

(12) Dry-Disc Rectifiers. These can be obtained to plug into the regular socket of the commercial "B" eliminator, without any changes in the internal wiring. Therefore, special circuits will not be given showing their use.

(13) "B" Eliminator Troubles. The most common cause of trouble in a "B" eliminator that fails to work is a shorted filter condenser. Therefore the first thing to do is to turn off the current, open the case, and test each condenser for shorts. The shorted condenser can be clipped out of the circuit and the eliminator put back in service again for temporary use, with only a possible slight increase in hum. It is important, however, to replace the condenser with a new one as soon as possible. The next source of trouble is usually found in the control resistors. If the detector voltage is high, the resistor connecting the detector tap to the negative side of the circuit is open. By measuring the output voltages with a high-resistance voltmeter, a defective resistor can easily be located. Continuity tests will indicate the condition of the choke coils and transformer windings. Slow starting, irregular operation or low voltage output, indicates a defective rectifier tube. The Raytheon should give about 4000 hours service, after which the voltage output will gradually drop off. By readjustment of the resistors, the voltage can be brought back and the tube used a considerable length of time before discarding it. "Hum" indicates a shorted filter coil or buffer condenser.

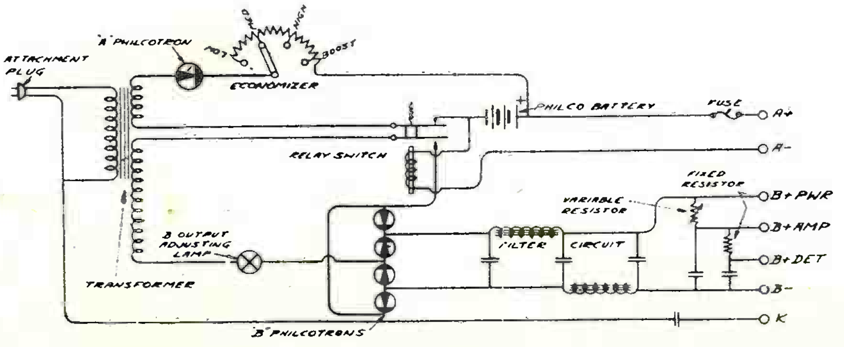

Fig. 29 - Philco AB Socket Power
Types AB-656 and AB-652.

(14) Motorboating. Motorboating is a common occurrence when using "B" eliminators,

and is important enough to be considered separately. It produces a "put-put-put" sound in the speaker, similar to that of a small gas engine, from which it gets its title. It is in reality a low-frequency oscillation caused by the combined circuits of the eliminator and set. A different type of eliminator may prevent it, or the use of a separate 45-volt battery for the detector, connected between the negative side of the eliminator and the detector terminal of the set; in which case the "Detector" terminal of the eliminator is not used. Sometimes it may be stopped by reversing one of the transformer windings in the audio-frequency amplifier. In resistance-coupled amplifiers, it is best to remove the first stage and insert in its stead an audio transformer. Sometimes a large by-pass condenser added to the eliminator output (especially the detector output) will prevent it.

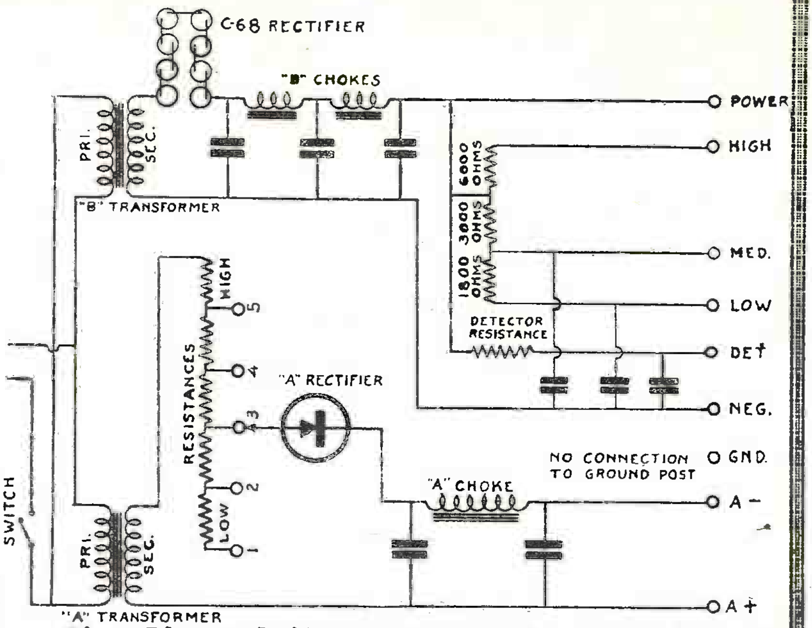

Fig. 30 - Balkite AB Power Unit 6-180 Form A.

(15) Combined "A" and "B" Eliminators. A combined "A" and "B" eliminator is merely the combination of the subjects we have just discussed, and a detailed analysis need not be given. Circuit diagrams, Figs. 29 and 30, showing the Philco and Balkite "AB" socket-power units, are given, however; the illustrations being self-explanatory.

(16) Power Packs. Power packs are made in many forms to suit different set conditions, but they are all fundamentally the same and have the same inherent characteristics. The power pack is a combination of parts designed to furnish the set with plate, grid, and filament voltages for A.C. tubes and is built in a unit separate from the set. It is thus distinguished from electric sets in which the power-supply system is an integral part of the set. We might appropriately call them heavy-duty "B" eliminators. In addition to furnishing plate, grid and filament voltages for A.C. tubes, some power packs also contain a stage of audio-frequency amplification - the output stage - of

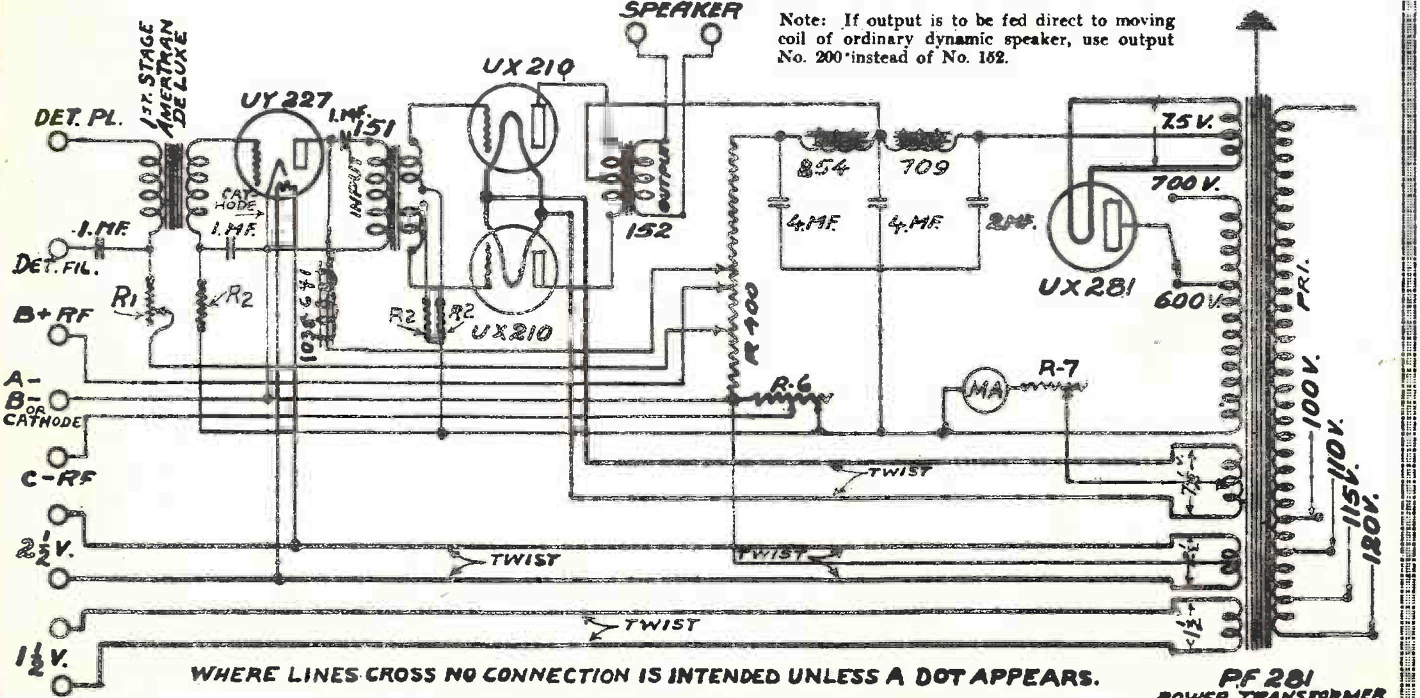

Fig. 31 - Amertran ABC Hi Power Box.

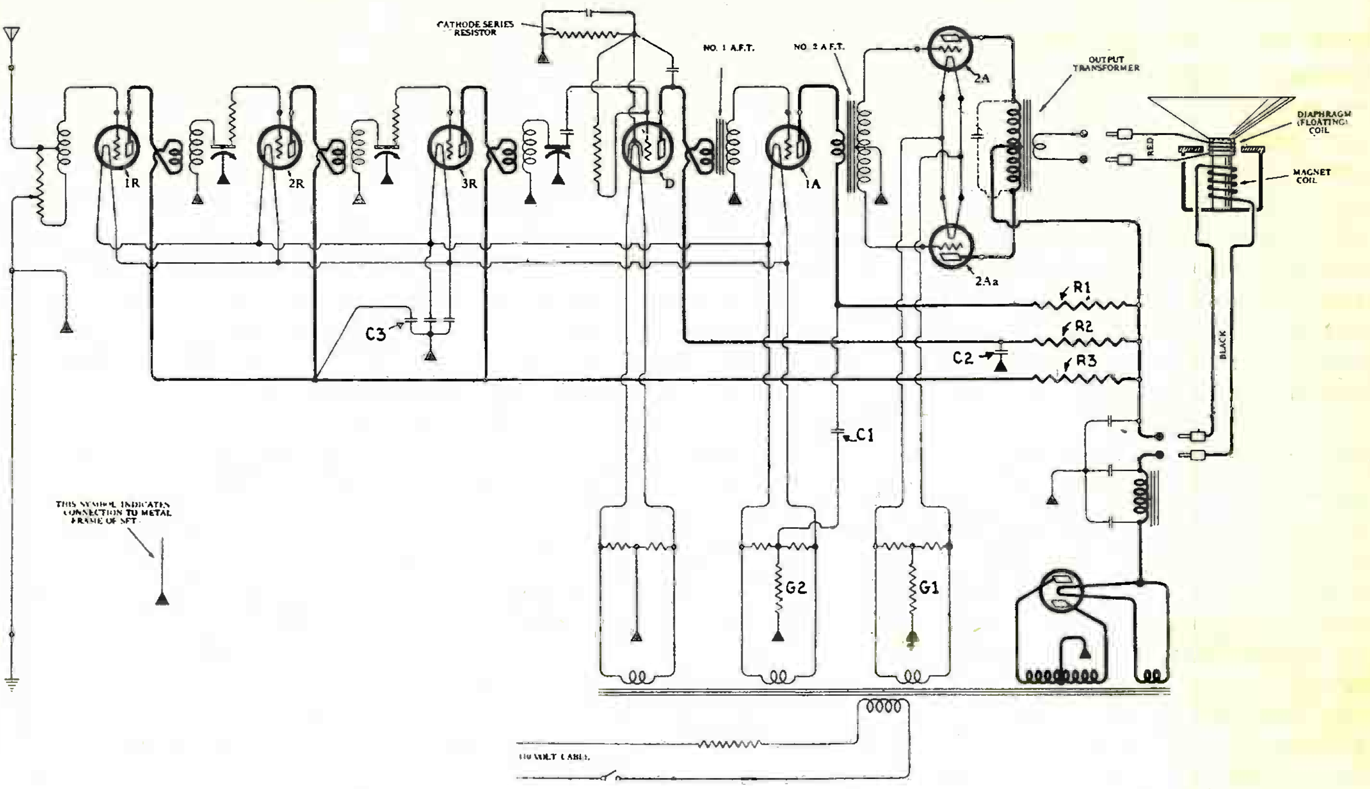

Fig. 32 - Atwater Kent Model 43 Set and Power Unit.

type '71, '10, '45 or '50, singly or in push-pull. A power pack of this type may be connected to the output from the first audio stage of any broadcast receiver and deliver a high-quality output of sufficient power to operate a dynamic speaker. Since servicing of power packs is identical with servicing power-supply systems in A.C. sets, we will describe this phase of the subject collectively at the end of this chapter. Fig. 31 shows the connections of the Amertran "ABC Hi-Power Box." Note that two audio stages are included, allowing the pack to be connected to the detector output of the receiver. A half-wave, type '81 rectifier tube is used. Note the connection between the two filter chokes to obtain the high-voltage plate supply for the two type '10 push-pull tubes.

(17) "Glow" Tube. It seems fitting to briefly describe the type '74 glow tube employed in many power packs to maintain a constant voltage output of 90 volts for the tubes of the set requiring this voltage. This tube will remedy much trouble from unstable A.C. supply. It is connected between the "B" negative and intermediate (90-volt) terminals, usually in series with a ballast resistor to maintain a constant current flow of 60 milliamperes through it. Characteristics of this tube are given in the tube chart, elsewhere in this book.

(18) Power Supply Systems. There are slight differences in the methods of obtaining plate and grid-bias voltages in the sets whose diagrams are included in this book. These differences, or rather methods, should be understood when making measurements, especially voltmeter readings, in order to be sure that the desired voltage supply leads will be found. Fundamentally, these power-supply systems are the same as those employed in "B" eliminators and power packs described previously. However, we shall point out a few of the variations in them, as designed by different set manufacturers.

(19) Plate-Supply Power. The main differences in plate supply appear in the voltage divider, or resistance network system. For example, Fig. 32 shows the diagram of the Atwater Kent "Model 43" set and power unit. Note that separate resistors (R1, R2 and R3) are used to obtain plate voltages for the first audio, detector, and R.F.amplifier tubes respectively. The resistances are by-passed by the condensers C1, C2 and C3.

With this arrangement, the only drain on the plate supply system is that due to the current consumption of the tubes. This method has certain advantages; if one resistor burns out it will not greatly affect the others. In this set, the field coil of the dynamic speaker serves as a filter choke; this is clearly indicated in the diagram. Series-resistance voltage dividers are more generally used, as indicated in the various diagrams of "B" eliminators and power packs; Fig. 33 shows the Steinite "Model 40" power pack which is representative of this method. In this case the voltage divider may be considered as one resistance, with taps taken off at the required voltage points. In this case the dynamic speaker's field winding is also used as a filter choke. The arrangement of chokes and condensers in the filter also varies in different sets - another reason why the diagram of the set should be studied before making measurements.

(20) Grid-Bias Voltage. The method of obtaining grid-bias voltage for the various tubes is fundamentally the same in all electric sets. Use is made of the voltage drop caused by the plate current of the tube flowing through a resistance. Knowing the plate current of the particular tube, the resistance can be calculated to give the desired drop. The "C" bias resistor is connected between the tube filament (or the center-tapped resistance connected across the filament, in the case of the '26 tube or power tubes; or the cathode in heater-type tubes) and the extreme negative end of the power-supply system. This is shown in the simplified diagram of Fig. 34. In the diagram of Fig. 32 the bias voltage for the power tubes is obtained by the drop across the grid resistance G1: that for the first audio and the R.F. stages is obtained by means of the resistance G2. In the diagram of Fig. 33 the 1190-ohm resistance furnishes the grid bias for the '71A power stage. These bias resistorsare sometimes in the power pack and sometimes in the set (or in both) and they should be located before taking grid voltage measurements; although the bias voltage may be obtained by connecting the voltmeter between the grid terminal of the set and the center-tap in the filament circuit of the same tube, or the cathode in heater-type tubes. An

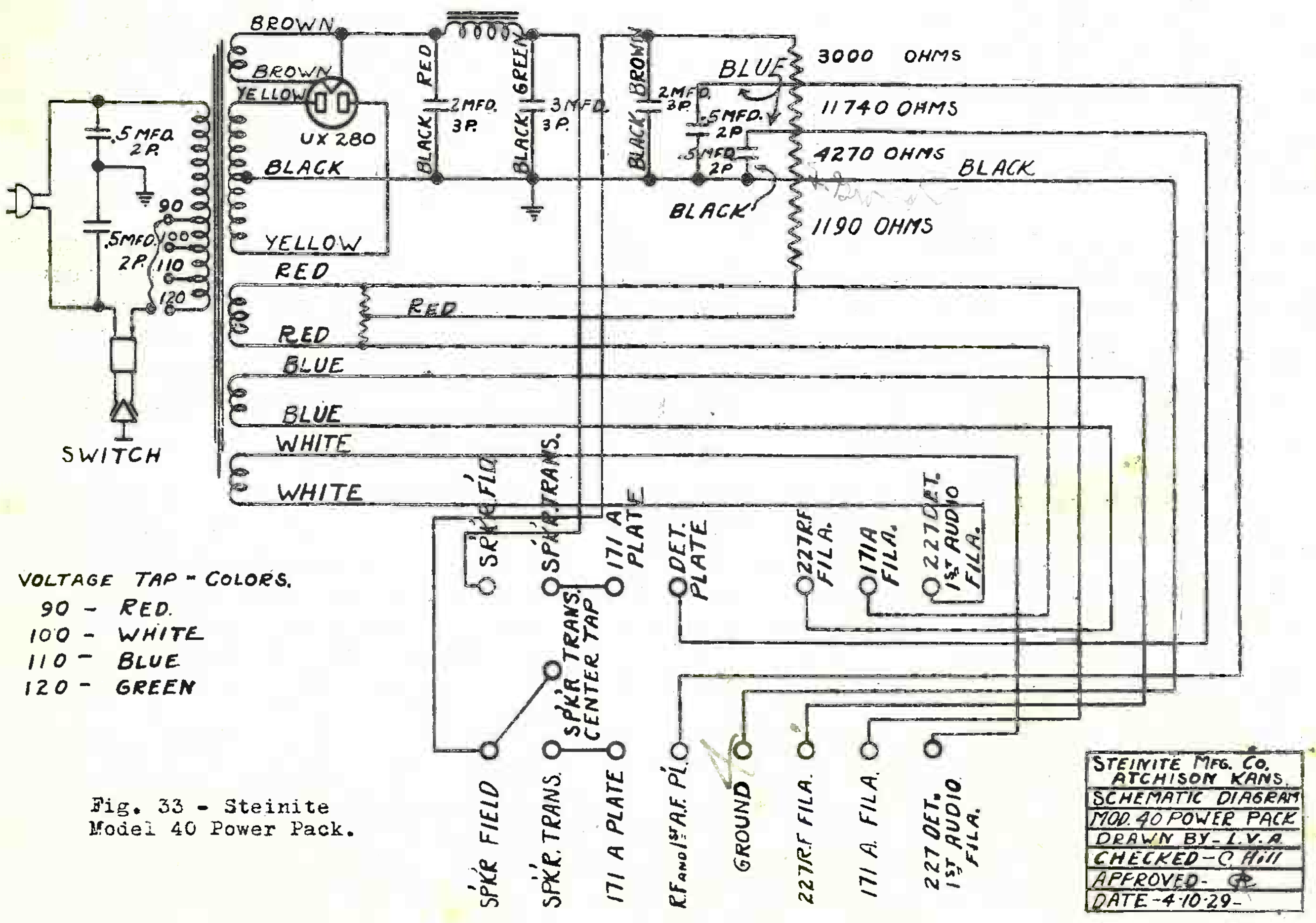

Fig. 33 - Steinite Model 40 Power Pack.

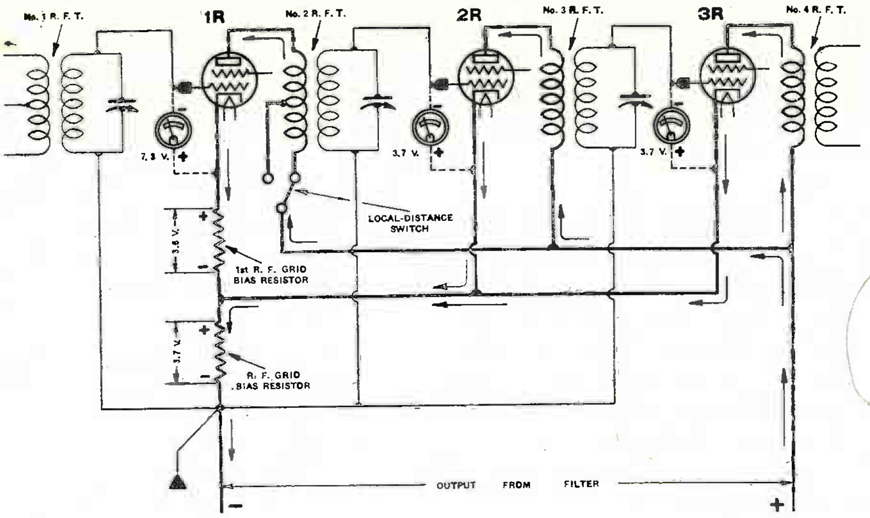

Fig. 34 - Circuit showing how Grid Bias Voltages are obtained in the Atwater Kent Model 60.

interesting departure is illustrated in Fig. 35; this simplified circuit shows how the second A.F. bias voltage in the Atwater Kent "Model 66" is obtained from the drop across the speaker's field coil, in the negative side of the filter circuit. It is imperative that the grid-bias resistance is by-passed by a suitable condenser to prevent feed-back, howling and hum.

(21) Filament Voltage. Regardless of the type of tubes used, the filament supply system is very simple; raw alternating current being used on all filaments. The correct voltage and current outputs are taken from secondary windings on the main power transformer or, in some cases, from a separate filament transformer. Connections are made to the electrical centers of the filament windings by means of center taps on the windings or center-tapped resistors connected across the windings. In many cases, hum is caused by not having the correct center tap; this center-tapped resistor or potentiometer should be carefully adjusted until minimum hum is heard in the loud speaker.

(22) Power-Supply Troubles. Troubles in power-supply systems are not very difficult to locate if we proceed in a systematic manner. Knowing the main sources of troubles and their corresponding symptoms, we can trace back and find the detailed faults probably in less time than it takes to read this paragraph. Therefore a complete detailed analysis is deemed unnecessary and we limit ourselves to generalizations only. Faults in power-supply systems manifest themselves in producing either:

(a) A.C. Hum,
(b) Wrong Supply Voltage,

or both; one usually accompanying the other. Many things can happen to the system that will produce the above effects. By testing each part of the apparatus in turn, the fault is soon located.

(23) A.C.Hum It is taken for granted that previous tests on the set show that the trouble exists somewhere in the eliminator. If the hum is slight, it may be caused by poor shielding, or proximity of the power transformer to the set, or induction from some part of the A.C. line into the set. Sometimes reversing the A.C. line plug will reduce hum slightly. A general cause of hum is found in wrong "C" bias voltages, poor adjustment of the center-tapped filament potentiometers, or open or shorted by-pass condensers across these resistors. In the

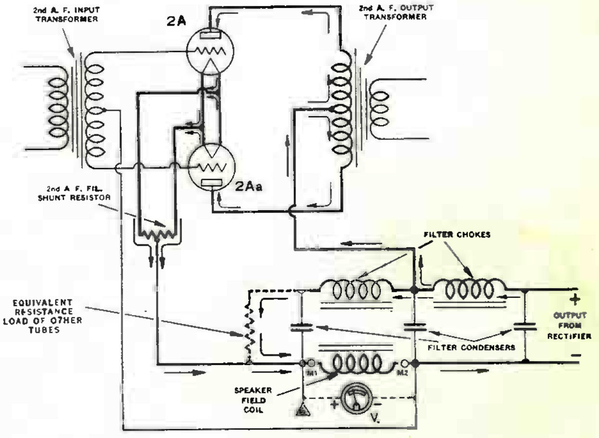

Fig. 35 - In the Atwater Kent 66 the drop across the speaker field coil gives the grid bias voltage of the 2nd A.F. tube.

type '26 tube used for radio and audio amplifiers, an accurate center tap on the filament circuit is important. An open filter condenser or a shorted choke coil will also cause poor filtering with a resultant hum. A poor rectifier tube will produce hum. Mechanical hum may be produced by vibration of the transformer core. Continuity tests on the coils and condensers, and voltmeter readings of the different output voltages, will locate the trouble.

(24) Wrong Supply Voltage. In this case, the line-voltage should be checked, adjusted if necessary by the line ballast resistance or taps on the transformer primary. After this is ascertained, the trouble may be found in an open resistor in the voltage divider. This is a common occurrence. The next most likely place is in the filter condensers; the one connected directly across the rectifier output usually punctures first, as it is under the influence of the hightest voltage. Of course a wrong load on the system will upset the various voltages; since we are assuming that the set is all right, this may be caused by a short circuit. In making voltage readings, it is important to use a high-resistance meter, otherwise the load placed on the system by the current consumed by the meter will upset the system and give erroneous values. A shorted filter coil, or an open coil, will cause too much voltage or give no output at all. Continuity tests will indicate the condition of the various parts. It is always well to compare the rectifier tube with a new one; as these tubes have a limited life. The resistance, condenser, and choke values should be compared with those specified by the manufacturer, to make certain that someone hasn't inserted wrong parts.

(25) Motor Generators. A.C. electric sets are sometimes operated on D.C. lines by means of motor generators or rotary converters, which change the 110-volt direct current to 110-volt, 60-cycle A.C. form. Aside from the additional cost and noise incurred by the use of the machine, the results obtained are superior to those obtained from D.C. sets. The rotary converter type, although very quiet in operation, should be installed in a closet or some distant place where it cannot be heard. These machines are furnished with a filter for eliminating commutator or line noises, the final result being quieter operation than is usually obtained on the normal 110-volt A.C. line. Both input and output sides of the motor generator or converter should be filtered, as shown in the illustration, Fig. 36. Troubles in these machines are those inherent to any motor or generator. Barring abuse, they should last a long time with only an occasional oiling of the bearings.

The brushes also need repair and replacing occasionally. In one instance, a Service Man reported trouble from brushes which were completely worn down to the brush holders - and these caused excessive grooves in the commutator. The commutator had to be removed and turned down on a lathe before the machine could be placed in service again.

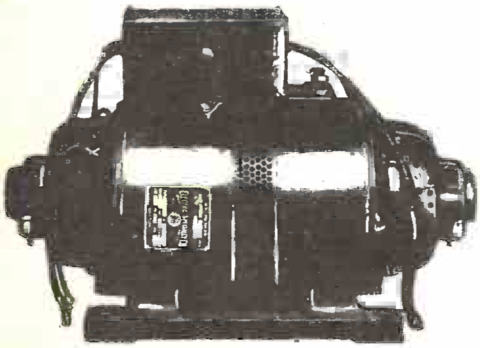
MOTOR GENERATOR WITH FILTER FOR RADIO RECEIVERS

Fig. 36 - At the left is shown the "ESCO" motor generator. The illustration at the right is that of the "JANETTE" rotary converter. Note the size of the filters used in connection with these machines. These instruments supply 110 volts A.C. from the 110 volt D.C. line.


Type C-13-F

CHAPTER IV

VACUUM TUBES

THE vacuum tube is the heart of the radio set, and one must understand vacuum tubes to understand radio. Since the beginning of radio broadcasting, improvements in sets have followed improvements in tubes. The theoretical analysis of vacuum tubes is beyond the scope of this book, which aims mainly to give the practical side only; one can measure tube voltages and characteristics without a profound understanding of the theory. A deeper insight into vacuum-tube action should be sought, however; but this should be obtained from a book devoted to the subject. Not only is the vacuum tube a source of many set failures, as well as successes, but it offers a means of diagnosing virtually all set troubles. The first procedure of the experienced Service Man is to measure quickly the currents and voltages of the different tubes in the set with a set analyzer and record the values. Any great discrepancy from normal values, as given by the manufacturer of the set, is instantly detected and in almost all cases as easily cured: whether it is caused by the tube or some other part of the set.

(2) Types of Vacuum Tubes. We are giving herewith a chart, Fig. 38, showing the average characteristics of the various types of vacuum tubes used in receiving sets, the ratings given being those recommended by the tube manufacturer. Tubes of different makes may vary slightly from these, but this list is representative of the majority. This chart is very helpful as a guide, but it should not be adhered to too closely, for many set manufacturers operate tubes at voltages differing widely from those specified in this list. For example, the Majestic "Model 90" receiver, employing power detection, operates the type '27 detector on a plate voltage of 270 volts, with a grid bias of 30 volts - values much higher than those given for this type of tube in the chart. In the following paragraphs, only the more popular types of tubes of widely different characteristics will be described in detail, which should sufficiently cover the entire field for all practical purposes.

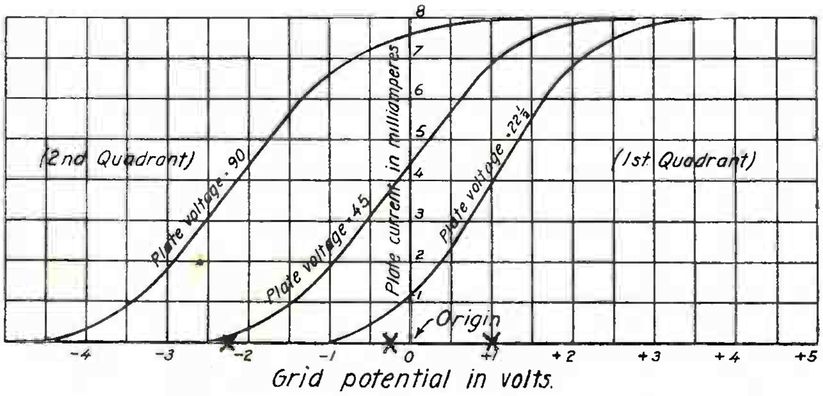

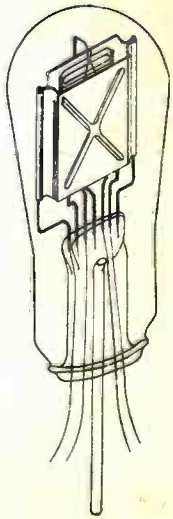

Fig. 39 - Static Characteristic curves of 3-element vacuum tube.
Fig. 40 (right) The type '01A vacuum tube.

(3) Basic Principles. The basic principles of vacuum-tube action should be understood, at least in an elementary way, in order to facilitate set diagnosis. For example, in the three-element tube comprising filament, grid and plate, an understanding of the interdependence of one on the other should be known while taking measurements. Although the plate current will give much information regarding the set's condition, we must not forget that the plate current in a normal tube depends upon the plate voltage, the grid voltage and the filament current - the latter in turn depending upon the filament voltage. The graph of Fig. 39 shows the dependence of plate current on grid voltage, using a fixed plate voltages of 22½, 45 and 90 volts. With different

AVERAGE CHARACTERISTICS OF RECEIVING RADIOTRONS

	GENERAL									DETECTION				AMPLIFICATION						
	MODEL	USE	CIRCUIT REQUIREMENTS	BASE	MAXIMUM OVERALL HEIGHT	MAXIMUM OVERALL DIAMETER	"A" SUPPLY	FILAMENT TERMINAL VOLTAGE	FILAMENT CURRENT (AMPERES)	DETECTOR GRID RETURN LEAD TO	GRID LEAK (MEGOHMS)	DETECTOR "B" BATTERY VOLTAGE	DETECTOR PLATE CURRENT (MILLIAMPERES)	AMPLIFIER "B" BATTERY VOLTAGE	AMPLIFIER "C" BATTERY VOLTAGE	AMPLIFIER PLATE CURRENT (MILLIAMPERES)	A.C. PLATE RESISTANCE (OHMS)	MUTUAL CONDUCTANCE (MICROMHOS)	VOLTAGE AMPLIFICATION FACTOR	MAXIMUM UNDISTORTED OUTPUT (MILLIWATTS)
DETECTORS AND AMPLIFIERS	RADIOTRON WD-11	Detector or Amplifier	Transformer Coupling	WD-11 Base	$4\frac{1}{8}$"	$1\frac{3}{16}$"	Dry Cell $1\frac{1}{2}$ V. Storage 2 V.	1.1	.25	+F	3 to 5	$22\frac{1}{2}$ to 45	1.5	90 135	$4\frac{1}{2}$ $10\frac{1}{2}$	2.5 3.5	15,500 15,000	425 440	6.6 6.6	7 35
	RADIOTRON WX-12	Detector or Amplifier	Transformer Coupling	Large Standard UX Base	$4\frac{11}{16}$"	$1\frac{7}{16}$"	Dry Cell $1\frac{1}{2}$ V. Storage 2 V.	1.1	.25	+F	3 to 5	$22\frac{1}{2}$ to 45	1.5	90 135	$4\frac{1}{2}$ $10\frac{1}{2}$	2.5 3.5	15,500 15,000	425 440	6.6 6.6	7 35
	RADIOTRON UX-112-A A	↓ Detector or Amplifier	Transformer Coupling	Large Standard UX Base	$4\frac{11}{16}$"	$1\frac{13}{16}$"	Storage 6 V.	5.0	.25	+F	3 to 5	45	1.5	90 135	$4\frac{1}{2}$ 9	5.5 7	5,300 5,000	1,500 1,600	8 8	30 120
	RADIOTRON UV-199	Detector or Amplifier	Transformer Coupling	UV-199 Base	$3\frac{1}{2}$"	$1\frac{1}{16}$"	Dry Cell $4\frac{1}{2}$ V. Storage 4 V.	3.0 3.3	.060 .063	+F	2 to 9	45	1	90	$4\frac{1}{2}$	2.5	15,500	425	6.6	7
	RADIOTRON UX-199	Detector or Amplifier	Transformer Coupling	Small Standard UX Base	$4\frac{1}{8}$"	$1\frac{3}{16}$"	Dry Cell $4\frac{1}{2}$ V. Storage 4 V.	3.0 3.3	.060 .063	+F	2 to 9	45	1	90	$4\frac{1}{2}$	2.5	15,500	425	6.6	7
	RADIOTRON UX-200-A	Detector	Transf. or Resist. Coupling	Large Standard UX Base	$4\frac{11}{16}$"	$1\frac{13}{16}$"	Storage 6 V.	5.0	.25	-F	2 to 3	45	1.5	Following UX-200-A Characteristics apply only for Detector Connection			30,000	666	20	—
	RADIOTRON UX-201-A	Detector or Amplifier	Transformer Coupling	Large Standard UX Base	$4\frac{11}{16}$"	$1\frac{13}{16}$"	Storage 6 V.	5.0	.25	+F	2 to 9	45	1.5	90 135	$4\frac{1}{2}$ 9	2.5 3	11,000 10,000	725 800	8 8	15 55
	RADIOTRON UX-222	↓ Radio Freq. Amplifier	Special	Large Standard UX Base	$5\frac{3}{8}$"	$1\frac{13}{16}$"	Dry Cell $4\frac{1}{2}$ V. Storage 4.6 V.	3.3	.132	—	—	—	—	135	$1\frac{1}{2}$✱	1.5	850,000	350	300 M	—
	RADIOTRON UX-222	† Audio Freq. Amplifier	Special	Large Standard UX Base	$5\frac{3}{8}$"	$1\frac{13}{16}$"	Dry Cell $4\frac{1}{2}$ V. Storage 4.6 V.	3.3	.132	—	—	—	—	180 ⌇	$1\frac{1}{2}$ □	.3	150,000	400	60	—
	RADIOTRON UY-224	Radio Freq. Amplifier	Special	5 Prong Standard UY Base	$5\frac{1}{4}$"	$1\frac{13}{16}$"	Transformer 2.5 V.	2.5	1.75	—	—	—	—	180	$1\frac{1}{2}$¶	4	400,000	1050	420 M	—
	RADIOTRON UX-226	Amplifier A-C Filament Type	Transformer Coupling	Large Standard UX Base	$4\frac{11}{16}$"	$1\frac{13}{16}$"	Transformer 1.5 V	1.5	1.05	—	—	—	—	90 135 180	6 Δ 9 Δ $13\frac{1}{2}$ Δ	3.7 6 7.5	9,400 7,400 7,000	875 1,100 1,170	8.2 8.2 8.2	20 70 160
	RADIOTRON UY-227	Detector or Amplifier A-C Heater Type	Transformer Coupling	5 Prong Standard UY Base	$4\frac{11}{16}$"	$1\frac{13}{16}$"	Transformer 2.5 V.	2.5 H	1.75	C	2-9	45	2	90 135 180	6 9 $13\frac{1}{2}$	3 5 6	10,000 9,000 9,000	900 1,000 1,000	9 9 9	30 78 164
	RADIOTRON UX-240	Detector or Amplifier	Resistance Coupling	Large Standard UX Base	$4\frac{11}{16}$"	$1\frac{13}{16}$"	Storage 6 V.	5.0	.25	+F	2 to 5	135 180 ⌇	.3 .4	135 180 ⌇	$1\frac{1}{2}$ 3	.2 .2	150,000 150,000	200 200	30 30	—
POWER AMPLIFIERS	RADIOTRON UX-112-A A	† Power Amplifier	No L. S. C. Required	Large Standard UX Base	$4\frac{11}{16}$"	$1\frac{13}{16}$"	Storage 6 V Transformer 5 V.	5.0	.25	—	—	—	—	135 $157\frac{1}{2}$ 180	9 $10\frac{1}{2}$ $13\frac{1}{2}$	7 9.5 9.5	5,000 4,700 4,700	1,600 1,700 1,700	8 8 8	120 195 275
	RADIOTRON UX-120	Power Amplifier	No L. S. C. Required	Small Standard UX Base	$4\frac{1}{8}$"	$1\frac{3}{16}$"	Dry Cell $4\frac{1}{2}$ V. Storage 4 V	3.0 3.3	.125 .132	—	—	—	—	135	$22\frac{1}{2}$	6.5	6,600	500	3.3	110
	RADIOTRON UX-171-A A	Power Amplifier	L. S. C. Except at 90 V.	Large Standard UX Base	$4\frac{11}{16}$"	$1\frac{13}{16}$"	Storage 6 V Transformer 5 V	5.0	.25	—	—	—	—	90 135 180	$16\frac{1}{2}$ 27 $40\frac{1}{2}$	10 16 20	2,500 2,200 2,000	1,200 1,360 1,500	3.0 3.0 3.0	130 330 700
	RADIOTRON UX-210	Power Amplifier	L. S. C.	Large Standard UX Base	$5\frac{5}{8}$"	$2\frac{3}{16}$"	Transformer 7.5 V.	7.5	1.25	—	—	—	—	250 300 350 400 425	18 $22\frac{1}{2}$ 27 $31\frac{1}{2}$ 35	10 13 16 18 18	6,000 5,600 5,150 5,000 5,000	1,330 1,450 1,550 1,600 1,600	8 8 8 8 8	340 600 925 1325 1540
	RADIOTRON UX-245	Power Amplifier	L. C. S.	Large Standard UX Base	$5\frac{5}{8}$"	$2\frac{3}{16}$"	Transformer 2.5 V	2.5	1.5	—	—	—	—	180 250	33 Δ 50 Δ	26 32	1950 1900	1800 1850	3.5 3.5	780 1600
	RADIOTRON UX-250	Power Amplifier	L. S. C.	Large Standard UX Base	$6\frac{1}{4}$"	$2\frac{11}{16}$"	Transformer 7.5 V.	7.5	1.25	—	—	—	—	250 300 350 400 450	45 Δ 54 Δ 63 Δ 70 Δ 84 Δ	28 35 45 55 55	2,100 2,000 1,900 1,800 1,800	1,800 1,900 2,000 2,100 2,100	3.8 3.8 3.8 3.8 3.8	900 1500 2350 3250 4650
RECTIFIERS	RADIOTRON UX-280	Full-Wave Rectifier	Full-Wave Circuit	Large Standard UX Base	$5\frac{5}{8}$"	$2\frac{3}{16}$"	Rectification in Eliminators Designed for this Radiotron or Radiotron UX 213	Filament Terminal Voltage....5 Volts Filament Current..........2 Amperes A. C. Plate Voltage....... 350 Volts (Max. per plate) } R M S					Max. D. C. Output Current (both plates)..........125 Milliamperes D. C. Output Voltage at max. current as applied to filter of typical rectifier circuit. 300 Volts							
	RADIOTRON UX-281	Half-Wave Rectifier	Half or Full Wave Circuit	Large Standard UX Base	$6\frac{1}{4}$"	$2\frac{7}{16}$"	Rectification in Eliminators Designed for this Radiotron or Radiotron UX-216 B	Filament Terminal Voltage...7.5 Volts Filament Current........1 25 Amperes A. C. Plate Voltage....... 700 Volts (Maximum) } R M S					Recommended Maximum A. C. Plate Voltage..........650..........700 Volts D. C. Output Current..........65..........85 Milliamperes D. C. Output Voltage as applied to filter of typical rectifier circuit..........620..........620 Volts							
MISCELLANEOUS	RADIOTRON UX-874	Voltage Regulator	Series Resistance	Large Standard UX Base	$5\frac{5}{8}$"	$2\frac{3}{16}$"	Constant Voltage Device	Designed to keep output voltage of B eliminators constant when different values of "B" current are supplied					Operating Voltage..........90 Volts D.C. Starting Voltage..........125 Volts D.C. Operating Current..........10-50 Milliamperes							
	RADIOTRON UV-876	Current Regulator (Ballast Tube)	Transformer Primary of 65 Volts for use on 115 Volt Line	Standard Mogul Type Screw Base	8"	$2\frac{1}{16}$"	Constant Current Device	Designed to Insure constant Input to power operated radio receivers despite fluctuations in line voltage					Operating Current..........1.7 Amperes Mean Voltage Drop..........50 Volts Permissible Variation..........±10 Volts							
	RADIOTRON UV-886	Current Regulator (Ballast Tube)	Transformer Primary of 65 Volts for use on 115 Volt Line	Standard Mogul Type Screw Base	8"	$2\frac{1}{16}$"	Constant Current Device	Designed to insure constant input to power operated radio receivers despite fluctuations in line voltage					Operating Current..........2.05 Amperes Mean Voltage Drop..........50 Volts Permissible Variation..........±10 Volts							

† (↓) Note other use of this Radiotron above (below)
✱ Inner Grid - $1\frac{1}{2}$ Volts; Outer Grid +45 Volts, .15 Milliamperes
□ Outer Grid - $1\frac{1}{2}$ Volts; Inner Grid + $22\frac{1}{2}$ Volts, 6 Milliamperes
⌇ Applied thru plate coupling resistance of 250,000 Ohms
Δ Grid voltage is given with respect to mid-point of filament
¶ Inner Grid $-1\frac{1}{2}$ Volts; Outer Grid +75 Volts

Note: All grid voltages are given with respect to cathode or negative filament terminal unless otherwise noted

Max. Values not to be exceeded

A....... Except for half ampere filament, UX-112 and UX-171 characteristics are identical respectively to UX 112-A and UX 171-A.
C....... Cathode
H....... Heater Voltage
L S C.... Loud Speaker Coupling, consisting of either Choke Coil and By-Pass Condenser or Output Transformer of 1 : 1 or step down ratio, recommended wherever plate current (D C) exceeds 10 milliamperes
M....... With a screen-grid tube, on account of circuit limitations, the actual voltage amplification obtainable does not bear as nigh a relation to the voltage amplification factor as in the case of three electrode tubes

Fig. 38 - The characteristics given in this chart may be considered typical of all makes of receiving tubes. Characteristics of the types of tubes used in the majority of radio sets are given. Average characteristics of additional tubes not included in this chart will be found on page 37. These tubes made their appearance after publication of the above chart. Characteristics of special tubes such as the pentode shown on page 35, are not given in this chart.

fixed plate voltages, different curves result, as shown. For undistorted reception in audio amplifiers the tube can be operated only on the straight portion of the curve, which portion is longer with higher plate voltages, thereby affording greater undistorted output. The grid voltage should be held normally at a definite average value indicated by the center of the straight portion of the curve. This allows the plate current to swing equally above and below this point, and cover the entire straight portion. Since the curve is different with different plate voltages, the normal grid voltage or bias will likewise be different; the higher the plate voltage, the greater the negative grid bias voltage required. In other words, within practical limits, a tube may be operated at any plate voltage, provided the corresponding proper grid voltage is employed. For example, the correct grid bias voltages for use with the plate voltages shown in Fig. 39 are indicated at the bottom of the graph; they are, approximately, plus 1, minus ¼, and minus 2¼, for the 22½, 45 and 90 volt curves, respectively.

(4) Battery-Operated Tubes. The type '01A tube is widely used in battery and D.C. electric sets and may be considered in this elementary discussion as typical of all three-element battery operated tubes, the difference being mainly in the ratings. This tube is used for detector, radio, and audio-frequency amplifiers. From our chart we find that this particular tube operates from a 6-volt storage battery and has a terminal voltage of 5; one volt being lost in the filament-control rheostat and connecting leads. At this voltage the filament current is 0.25-ampere. Plate voltages of 45, 90 or 135 may be employed depending upon the circuit in which it is used; corresponding grid-bias voltages are given in the chart. Fig. 40 shows the internal construction of this type of tube. Defects are usually traced to the filament which, through age or abuse becomes impotent and loses its power to emit electrons. Such a defect is accompanied by general weakness of the set and lack of sensitivity. It has almost human qualities. Very low plate current, with proper applied voltages, is another symptom of low electronic emission. It is best to replace such tubes with new ones. In any event, it is advisable to check the filament voltage, especially in D.C. electric sets, as this is one value which should remain normal and constant. Excessive filament voltage will shorten the life of the tube; less than normal filament voltage will give the tube longer life, as a general rule; but for over-all efficiency the rated filament voltages should be adhered to.

(5) Battery-Operated Power Tubes. The types '12A and '71A tubes are commonly used in the output stages of battery sets, and differ mainly from the '01A type in that they allow a much greater undistorted output; the same general information given in regard to the '01A tube may be applied to them.

(6) A.C. Tubes. The type '26 tube is extensively employed in A.C. sets for both radio- and audio-frequency amplifiers; it is not suited for detection purposes, on account of the excessive A.C. hum produced. This tube is similar to the '01A type, except that its filament is designed for a much lower voltage and higher current; namely, 1.5 volts and 1.05 amperes. The reason for this is to give the filament sufficient mass to hold the heat longer and not rise and fall in temperature with the rise and fall in each half-cycle of alternating current; thereby reducing hum. It has a four-prong base and connections similar to those of the '01A type. In an amplifier stage employing this tube, the grid return leads connect to a center-tapped resistor connected across the filament. If excessive hum is produced in the set, these resistors should be examined and adjusted for minimum hum. This tube is not suited for the output stage on account of its limited output; for this purpose, the type '71, '10, '45, or '50 power tubes are employed, connected singly, in parallel or push-pull, with filaments lit by A.C. and having center-tapped resistors for the grid returns. Sometimes center-tapped resistances are eliminated by connecting the grid returns to a center tap on the secondary winding of the filament transformer.

(7) The A.C.Heater Tube. The type '27 A.C. heater tube is used as a detector in

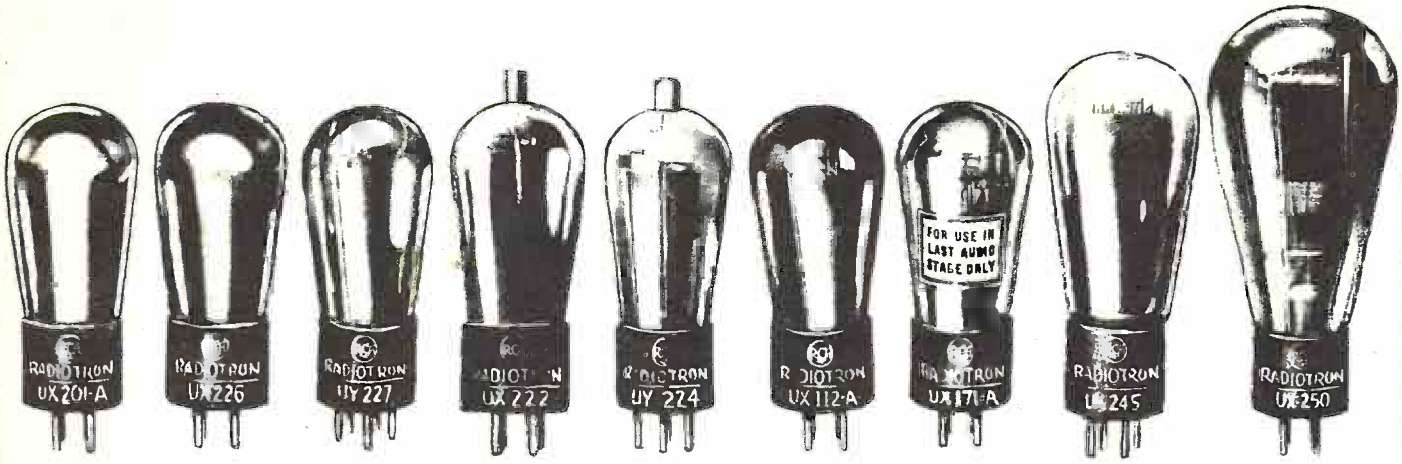

Fig. 41 - Vacuum tubes most generally used in modern receivers.

all A.C. electric sets; and also as radio-frequency and first-stage audio-frequency amplifiers in many sets. The filament of this tube draws 1.75 amperes at 2.5 volts; it consists of a fine tungsten wire threaded through two holes in a porcelain-like tube. Around this tube is an oxide-coated metal cylinder, the cathode, which emits electrons when heated to redness. Its heat is obtained by its proximity to the white-hot tungsten filament. Since the cathode is electrically insulated from the A.C.filament, no A.C. hum is introduced into the radio circuits. It takes an appreciable time for the heater filament to heat the cathode to redness, from 15 to 45 seconds elapse before the set gets into action. Some of the early makes of these tubes are known as "blinkers;" a poor weld at the heater causes the circuit to open after the heater becomes hot, and close again after it cools down, making the reception rise and fall in volume. In the circuits in which heater type tubes are used, the tungsten filament is maintained at a positive potential with respect to the cathode, thereby preventing any emission of electrons from the A.C. filament into the cathode with a consequent introduction of hum. These tubes employ a five-prong or "UY" base; having two prongs for the filament or heater, one for the cathode, one for the grid and one for the plate.

(8) Screen-Grid Tubes. In addition to the regular filament, grid, and plate elements of the ordinary tube, the screen-grid tube employs a fourth element, which is a metallic network interposed between the grid and plate, and used mainly as an electrostatic shield for shielding the plate from the grid and preventing electrostatic feed-back. This allows much greater amplification in radio-frequency amplifiers without oscillation. Neutralization is therefore unnecessary. A positive potential of from 70 to 90 volts is applied to the screen. Although this type of tube is used mainly in radio-frequency amplifiers, it may be employed as a detector or a resistance- or impedance-coupled audio amplifier; or as a "space-charge" tube in an audio amplifier. In this case the inner grid is connected to a positive potential of about $22\frac{1}{2}$ volts, to neutralize the space charge within the tube. The screen is employed as the control-grid. In radio-frequency amplifiers, the value of the positive voltage applied to the screen, determines the amplification, and this effect is made use of as a volume control. The screen-grid tube is made in the heater type, the type '24, in which a standard 5-prong base is used and the control grid is connected to a terminal at the top of the tube, as illustrated in Fig. 41. The type '22 is also a screen-grid tube, but is not the heater type.

(9) Gas Rectifier Tubes. The gas-rectifier tube is largely employed in "B" eliminators, of which the Raytheon type "BH", illustrated in Fig. 42, is a typical example. These rectifiers depend upon ionization of gas for their action and take advantage of the difference in size of their electrodes for "unilateral" (one-way) conductivity. In the one illustrated, the two small electrodes connect to the 350-volt output termin-

als of a transformer secondary having a center tap. A direct-current output of 125 milliamperes may be drawn from the hat-shaped electrode and the center tap. Failure in these rectifiers is usually due to age or internal breakdown, in which case sparking can be observed. Chapter III gives further information in connection with this tube, as used in a "B" eliminator.

(10) The Pentode. A new tube to make its appearance on the market is known as the five-element pentode. While not in general use, it is fast becoming popular, and a brief description may not be amiss. It is somewhat similar to the four-element screen-grid tube described above, but with the addition of a "space-charge" grid surrounding the cathode; the connection to this extra grid being brought out to a terminal on the side of the tube base. The remaining terminals are similar to those of the '24 type screen-grid tube. A very high amplification factor is claimed, one stage being sufficient in the audio amplifier. An amplification factor as high as 750 may be obtained with a plate voltage of 250, screen-grid voltage of 135 (positive) and space-charger-grid voltage of 20 (positive). The heater filament is similar to that of the '24 type. An illustration of this tube is also shown in Fig. 42.

(11) Filament Rectifier Tubes. The half-wave '81 and full-wave '80 rectifiers are largely employed in A.C. receivers, and in some cases to supplying field current for dynamic speaker. Characteristics of these tubes are given in the chart. Failure is usually due to internal breakdown, manifesting itself in the form of a blue glow within the tube. When this takes place, the tube may be operated successfully at a lower voltage, but it is usually best to replace it. Circuit connections are shown in Chapter III as well as in many of the diagrams of this book.

(12) Vacuum-Tube Tests. Vacuum-tube tests on any radio set should be conducted systematically. Suppose we arrange our tests in the following order:

(a) Plate-current tests,
(b) Plate-voltage tests,
(c) Grid-voltage tests,
(d) Filament-voltage tests.

A knowledge of these four functions will give a fairly complete indication of the condition of the tubes and associated circuits.

(13) Plate-Current Tests. The milliampere reading of the plate current of each tube in the set tells us a very complete story, but we cannot rely on it

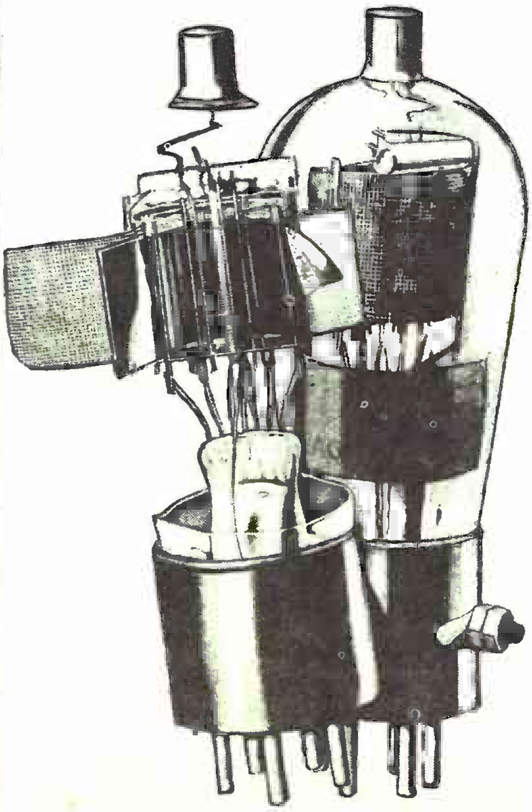

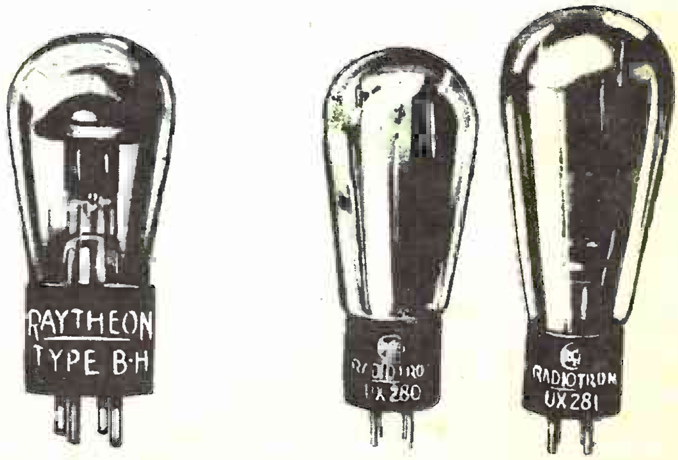

Fig. 42 - The Pentode, Raytheon Type "BH," and the types '80 and '81 rectifiers are shown in this illustration.

too much, since the plate current of different tubes in the different sets varies widely and the figures given in the tube chart cannot be rigidly adhered to. Only where the readings deviate very far from those given should we look for real trouble. It is best to follow the ratings given by the set manufacturer, wherever possible. Causes of excessive plate current and of insufficient plate current are given below, which causes should be further checked to find the guilty ones, after which they can be corrected.

(14) Excessive Plate Current may be due to :

(a) Excessive plate voltage,
(b) Insufficient or incorrect grid voltage,
(c) Excessive filament voltage,
(d) Defective tubes,
(e) Leaky condenser, or poor insulation of circuit.

(15) Insufficient Plate Current may be due to :

(a) Insufficient plate voltage,
(b) Excessive negative grid bias,
(c) Low filament voltage,
(d) Defective tube.

(16) Plate Voltage Tests. If the foregoing measurements indicate that the trouble lies in excessive or insufficient plate voltage, the causes of an erratic plate voltage may be traced to the following:

(17) Excessive plate voltage may be due to:

(a) Open in the negative end of voltage divider in the power-supply system,
(b) Excessive negative grid bias,
(c) Low filament voltage,
(d) Defective tube.

(18) Insufficient plate voltage may be due to:

(a) Failure in power-supply system,
(b) Low negative or even a positive grid bias,
(c) Excessive filament voltage,
(d) Defective tube.

(19) Grid-Voltage tests. Should the erratic plate voltage or plate current readings be traced to high, low or reversed grid bias, we may look for the following defects:

(a) Shorted by-pass condenser across "C" battery or grid-bias resistor,
(b) Open "C" battery or grid-bias resistor,
(c) Leakage in insulation or blocking condenser between grid and plate-supply circuit,
(d) Open transformer winding in grid circuit,
(e) Defective tube socket.

(20) Filament-Voltage Tests. If our erratic plate current and voltage readings are traced to wrong filament-supply voltage, we have but to trace the filament-supply circuit and find the cause. In battery sets the filament voltage may be too low, because of poor connections or a weak battery. If an "A" eliminator is used, its adjustment should be checked. In A.C. electric sets, the filament transformer may be

overloaded by a partial short across the filament circuit. The line-voltage should be checked also.

(21) Defective Tube. A defective tube may cause erratic readings due to a deactivated filament, loss of vacuum (causing the tube to emit a blue glow); or a short circuit between the elements within the tube. In this latter case, the grid may touch the plate or filament, thereby upsetting its bias potential and killing the normal tube action. Some tubes have a very detrimental microphonic effect producing a loud howl in the speaker; the detector tube is the worst offender. It should be replaced or exchanged with one of the other tubes.

RCA 232

RCA Radiotron 230 - - - - -

. . . may be used either as detector or amplifier. Its characteristics are:

Filament Voltage	2.0 Volts
Filament Current	0.06 Amperes
Plate Voltage, Max.	90 Volts
Grid Voltage (C-Bias)	4.5 Volts
Plate Current	2.0 Ma.
Plate Resistance	12,500 Ohms
Amplification Factor	8.8
Mutual Conductance	700 Micromhos
Effective Grid-Plate Capacitance	6 Mmf.

RCA Radiotron 231 - - - - -

. . . has been designed for volume output from battery operated receivers where economy of plate current is important. It is for use in last audio stage. Its characteristics are:

Filament Voltage	2.0 Volts
Filament Current	0.150 Amperes
Plate Voltage, Max.	135 Volts
Grid Voltage (C-Bias)	22.5 Volts
Plate Current	8 Ma.
Plate Resistance	4000 Ohms
Amplification Factor	3.5
Mutual Conductance	875 Micromhos
Undistorted Power Output	170 Milliwatts
Effective Grid-Plate Capacitance	6 Mmf.

RCA 230

RCA Radiotron 232 - - - - -

. . . is particularly recommended for use as a radio frequency amplifier in circuits designed especially for it. Its characteristics are:

Filament Voltage	2.0 Volts
Filament Current	0.06 Amperes
Plate Voltage, Max.	135 Volts
Grid Voltage (C-Bias)	-3 Volts
Screen Voltage, Max.	67.5 Volts
Plate Current	1.5 Ma.
Screen Current	Not over 1/3 of plate current
Plate Resistance	800,000 Ohms
Amplification Factor	440
Mutual Conductance	550 Micromhos
Effective Grid-Plate Capacitance	0.02 Mmf. Max.

Fig. 43 - Average characteristics of three types of 2-volt tubes are given in this illustration.

RCA 231

(22) Tube Reactivation. When a tube has lost its electron-emitting ability and passes a very small plate current, it can often be restored by reactivation. This is true of thoriated filaments such as are in nearly all tubes now in use. The coating of thorium on the surface gradually gives out and the tube loses its sensitivity. By reactivating the thorium inside of the filament is brought to the surface, thus permitting the tube to function normally again. One simple method to restore tubes that are only slightly weak is to burn them for $\frac{1}{2}$ to $1\frac{1}{2}$ hours with the plate supply disconnected. This "boils" out the thorium from the inside of the filament and provides a new layer on the surface. Tubes that are very weak can often be restored by "flashing" the filaments from 10 to 20 seconds at a filament voltage of approximately three times the normal filament voltage. After this process, the filament must be burned for about 30 minutes at a filament voltage about 25% above normal. The plate supply should be disconnected while this is being done. While reactivation is not always possible, and there is also danger of burning out the tube filament, the process may come in handy to the Service Man in cases of emergency or for temporary set operation to please a dissatisfied customer. Of course, reactivation of heater type A.C. tubes is impractical, especially "flash" method. Holding a tube over a gas flame will sometimes reactivate it.

CHAPTER V

THE LOUD SPEAKER

THE loud speaker or sound reproducer forms a very important part of every radio set; for, with a poor reproducer, good results cannot be expected, no matter how good the set may be. Since the reproducer is partly mechanical and it is in continuous use during reception, it is subject to wear and disintegration due to the excessive continuous vibration. Furthermore, it receives the greatest electrical strains of any part of the set, being connected to the extreme output and subjected to the total amplified output of the set. The importance of good speaker operation, as regards satisfied customers, cannot be too strongly urged.

(2) **Speaker Tests.** The nature of the sound coming from the speaker usually tells exactly the condition of the speaker; but we are not endowed with ears subtle enough to completely diagnose the trouble by sound alone. Only by much experience can we approach this skill. A dead, weak, noisy, or distorted set may be the effect of trouble either in the set or in the speaker system; and it can easily be localized in either by connecting a speaker known to be in good condition to the set output terminals in place of the questionable speaker, and comparing the two. We will assume, in the following paragraphs of this section, that the set output is of excellent quality and that trouble lurks in the speaker or its associated circuits. There are a variety of speakers in operation, each with its own group of inherent weaknesses, if we may use this term, where trouble may brew. We will describe them in the order of the following classification:

(a) Electrodynamic cone speakers,
(b) Magnetic cone speakers,
(c) Horn-type speakers,
(d) Electrostatic speakers.

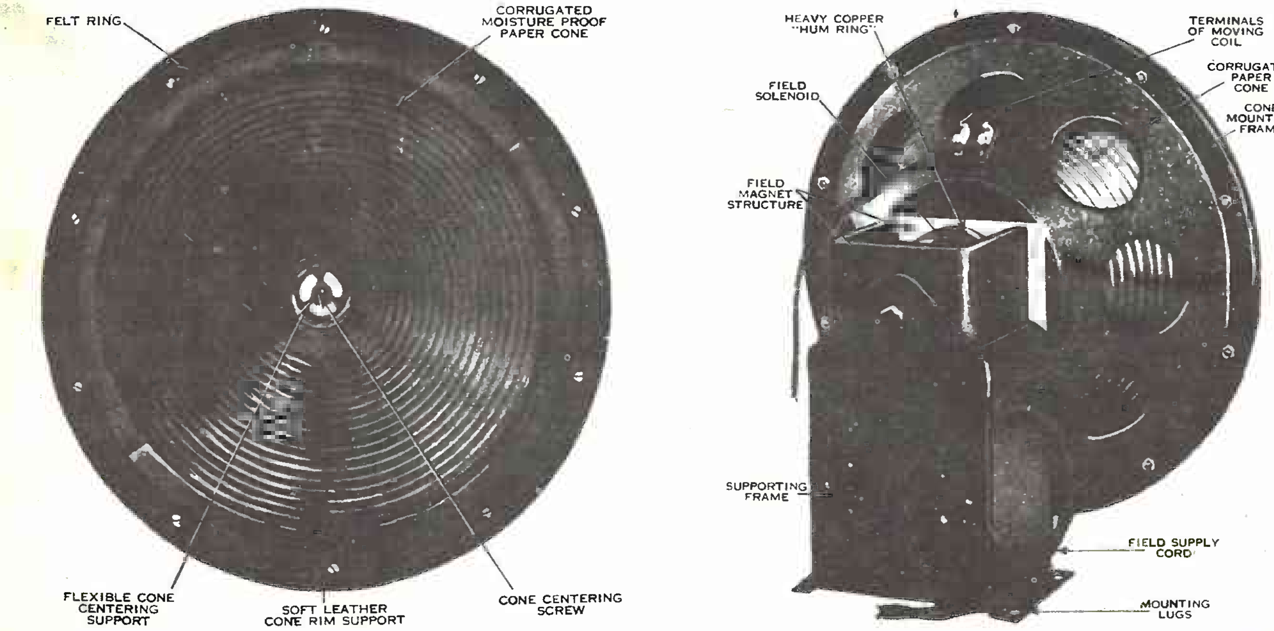

Fig. 44 - Front and rear views of the Stromberg Carlson P-1887C dynamic speaker.

(3) **Electrodynamic cone speakers.** Nearly all the more recent sets employ this form of reproducer. A typical example is shown in Fig. 44. The diagrammatic illustration, Fig. 45, shows that it is composed of a powerful electromagnet and a moving coil or "voice coil," which is attached to the apex of a cone and arranged for free movement within the magnetic gap of the electromagnet. In addition to these, the speaker system comprises the source of direct-current supply for energizing the electromagnetic field coil, and the output choke, filter or transformer adapting the voice

coil to the set output. Trouble may arise in any of these places, but we will first consider the main elements of the speaker shown in the illustration of Fig. 45.

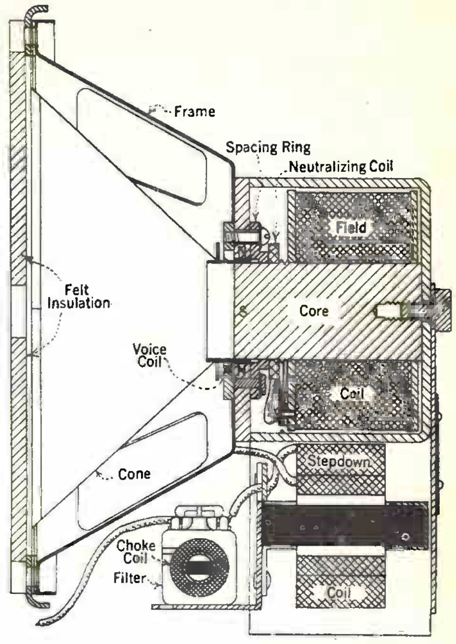

Fig. 45 - Dynamic speaker diagram.

(4) The Field Coil. Very weak, raspy, reproduction with almost complete absence of bass notes indicates failure of the field supply. It is best to remove the speaker from the cabinet before making tests; after which a clean knife blade or other iron tool, held near the center magnetic pole of the voice coil, should be strongly attracted when the field current is turned on. If no magnetism exists there is an open somewhere in the line, and a continuity test across the field winding should be made, after disconnecting it from the set. In many sets, the field coil serves as a filter choke in the power supply, in which case it is merely plugged into a jack in the rear of the set chassis. In such installations, the field coil has a resistance of several thousand ohms, which should be indicated by the continuity tester. The voltage supply to the coil should be measured at the field-coil jack, with the speaker in circuit and the set turned on, to make sure that there is no failure from that source. In some speakers, supplied with low-voltage direct-current obtained from the A.C. line by the use of dry rectifiers, a low-resistance field winding is employed, and this should be noted when making continuity tests in the field.

(5) The Voice Coil. The voice coils of different makes of dynamic speakers vary widely in number of turns and, consequently, in resistance. The resistances are too low to be accurately indicated on a continuity tester, making it difficult to detect a shorted turn. Often a loss of bass in the reproduction is caused by a shorted portion of the voice coil, due to rubbing on the iron field. This is best determined by removing the cone and coil and examining it. While an open circuit will kill reception, sometimes a high-resistance connection to the voice-coil terminals will cause much trouble. In one particular instance, a customer was well pleased with the radio reception, but the results from the phonograph pickup were not much to brag about, and the customer threatened to return the set after several attempts to rectify the trouble failed. It was later found, however, that this particular speaker employed a single-turn voice coil of heavy copper ribbon connected to a similar copper strip forming the secondary of the output transformer. The coil was obviously of very low ohmic resistance, and it was found that the resistance of one of the connections to the coil, although low, was appreciable when compared with the coil's resistance. This connection was thoroughly cleaned with steel wool and soldered. This not only brought the quality of the phonograph reproduction up to normal, but also improved the radio reception, and the customer was well pleased. The radio reception previously had been sufficiently powerful to give fairly good quality.

(6) The Magnetic Gap. This part of the speaker is more important than it appears, as it has a very bad habit of picking up bits of iron filings and holding them in the path of the moving coil, causing a raspy sound. In bad cases it will be necessary to disconnect the field, dismantle the speaker and wipe the gap with a piece of clean cloth. Sometimes bits of iron may be removed with a sharp-pointed iron tool; the magnetized iron particles will cling to the iron tool and are easily removed.

(7) Cone. The paper or composition cone sometimes becomes damaged by ill treatment, and sometimes it is shattered or broken near the apex by excessive volume. In either

case, it is best to replace it with a new one. It is important to center the cone accurately so that the coil does not touch the iron field and cause chattering. Loose parts on any part of the speaker or cabinet in which it is mounted are likely to cause rattling or extraneous vibration, and should be corrected.

(8) Field Supply. Field current for dynamics, in addition to the method previously described, in which the field coil forms part of the filter system of the set, is sometimes contained separately by rectified alternating-current or from the 110-volt D.C. line in D.C. installations, or from a storage battery. It is obvious that the rectifier-A.C. method is likely to cause the most trouble. In some cases the current is rectified by means of a vacuum tube such as the '80, giving a comparatively high voltage, and sometimes by means of dry-disc rectifiers, giving a low voltage. These two methods are shown in Figs. 46 and 47. Of the two methods, the vacuum-tube type of rectifier usually causes the least trouble. Sometimes the field is connected across the voltage divider of the set's power supply, as in the Atwater Kent "Model 55" set, as shown in Fig. 48. A filter is required in either case to reduce A.C. hum. Fig. 49 shows a typical speaker installation.

(9) Vacuum-Tube Rectifier. Failure in field supply on speakers using this type of rectifier may be due to a poor rectifier tube, a punctured filter condenser, an open transformer winding or line connection. Continuity tests will soon locate the trouble. As shown in the illustration, Fig. 46, a 2-mfd. condenser is sufficient for filtering purposes.

(10) Dry Rectifiers. A dynamic speaker with a 6-volt field connected to the rectified output of a trickle charger forms the basis of this type of A.C. dynamic speaker, except that the whole is assembled as one unit. The schematic diagram, Fig. 47, shows the usual connections. Fig. 50 shows the Radiola 41 A.C. speaker. Failure of field current is usually caused by the dry-disc rectifiers reaching the end of their useful life, especially if A.C. voltage is found across the secondary of the step-down transformer. Should this be the case, the rectifiers must be replaced. Excessive hum, caused by the pulsating direct current delivered to the field, may be reduced by connecting a low-voltage high-capacity condenser across the field. A condenser of 1000 to 2500 mf. rating is usually employed for this purpose. Short circuits often occur in this type of condenser, making it another source of trouble for the service man.

(11) Hum. Hum in dynamic speakers is sometimes reduced by means of a short-circuited ring around the center pole, which produces a bucking effect on any magnetic changes in the field and holds the flux steady. (see Fig. 44). In some speakers, part of the pulsating field current is fed into the voice-coil circuit through a variable resistance in order to balance out any hum. In these speakers the hum is under control and

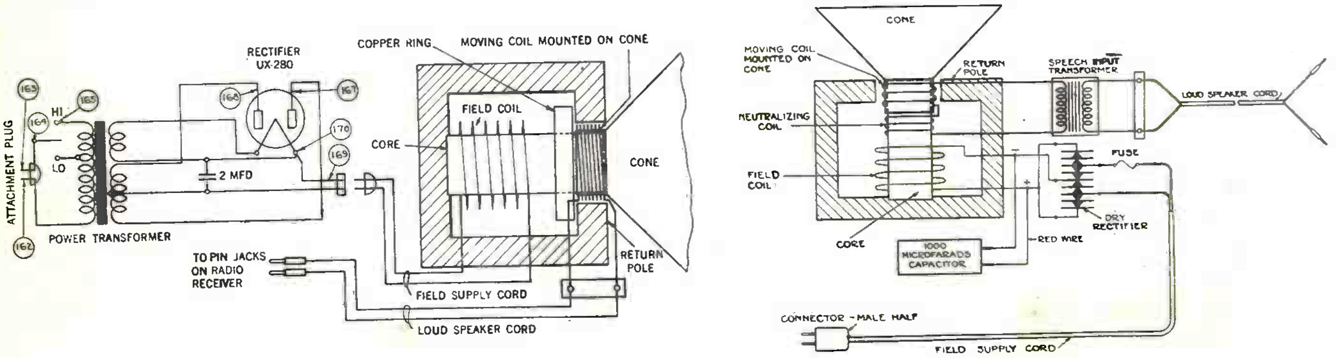

Figs. 46 and 47, showing filament rectifier field current supply and dry-disc rectifier field supply. Illustrations courtesy of Stromberg Carlson.

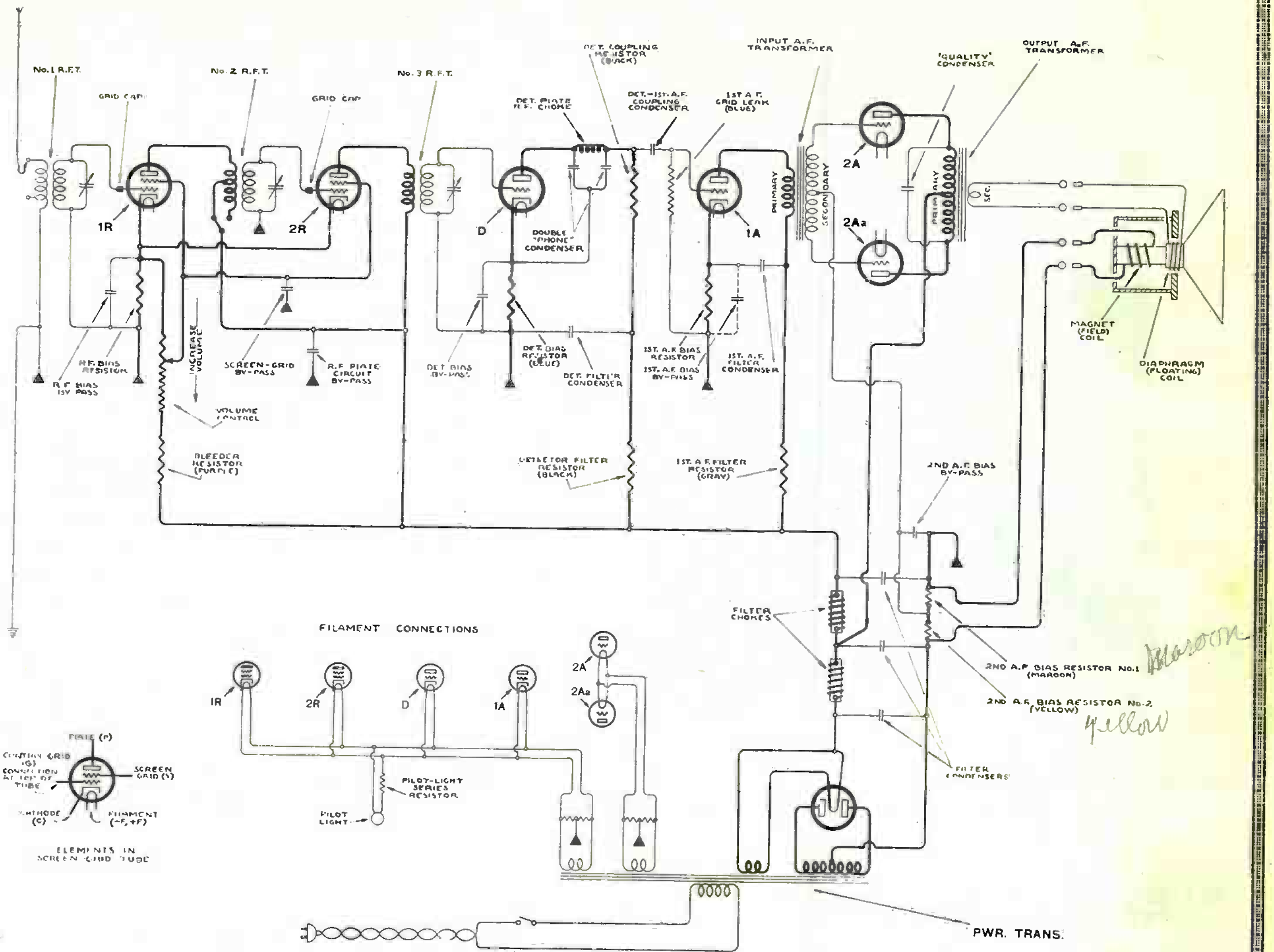

Fig. 48 - The Atwater Kent Early-Type Model 55 Set.

the control resistor should be carefully adjusted. A stationary bucking coil on the center field pole, connected in series with the voice coil and shunted by a variable resistance, is also employed in some speakers, as in Fig. 47.

(12) Speech-Input Transformer. This transformer may be part of the set or part of the speaker, but in any case its purpose is to match the output impedance of the power tube or tubes to the impedance of the voice coil of the speaker. The secondary of this transformer connects directly to the voice coil, as shown in Fig. 47 and its primary to the set output; sometimes through an output choke and by-pass condenser. In push-pull amplifiers, the primary may have a center connection to the high-voltage plate supply, the two ends connecting to the tube plates. An open speech-transformer winding will cause failure in the speaker. The connections to the transformer should be removed and continuity tests made on all the windings. Also, test between the windings and core to see that they are not grounded.

(13) Audio Filters. Some sets employ a combination of chokes and condensers to filter the audio output by making a definite predetermined frequency cut-off and an improved quality of reproduction. Fig. 51 shows the type of filter used in the Federal "Model K" receiver. It is obvious that an open choke or shorted condenser will interrupt reception, and the components of the filter should be tested separately.

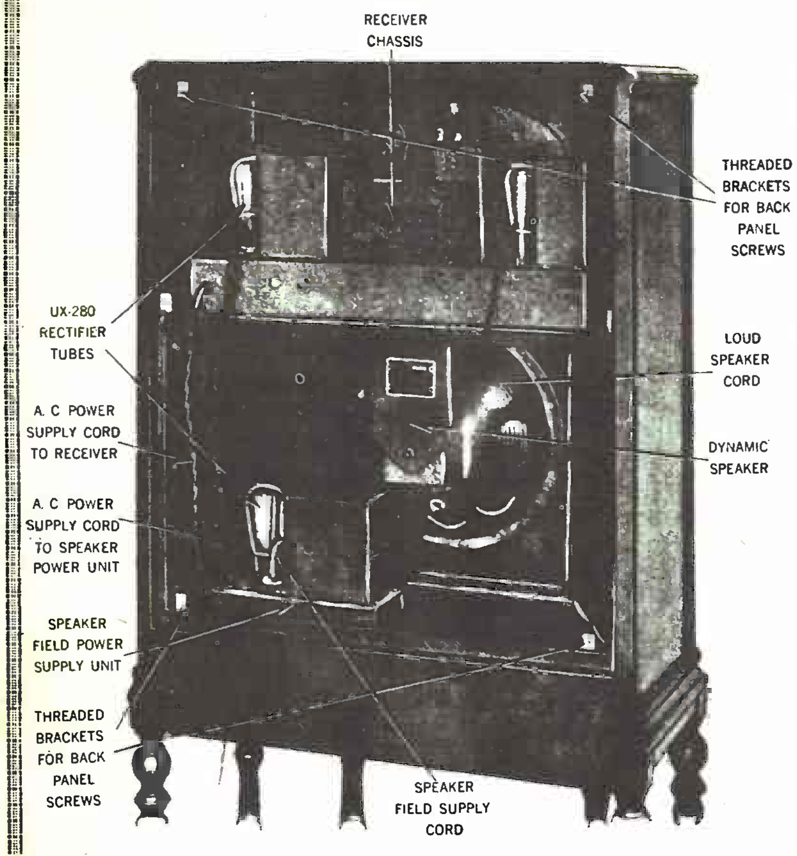

Fig. 49 - Rear view of #846 Stromberg Carlson Receiver.

(14) Magnetic Cone Speakers. The testing of magnetic cone speakers is similar to that of dynamic speakers, the main difference being that the magnetic instruments employ permanent magnets and have no field supply, making the localizing of trouble easier. Since these speakers employ a high-impedance coil wound in a small space with many turns of fine wire, open coils are a frequent occurrence. A continuity test at the coil terminals will reveal the condition of the coil. It is best to disconnect the flexible connecting cord, as this may be shorted from dampness or open circuited. The cord should then be tested separately. Speech-input transformers are sometimes employed with these speakers, but usually there are an output choke and condenser, arranged to prevent the D.C. component of the plate current from flowing through the speaker unit winding and destroying it or unbalancing the unit or weakening the permanent magnet. Tests on this apparatus are described in connection with dynamic speakers. Fig. 52 shows the coils, armature and driving mechanism of the R.C.A. Model 100 A speaker.

(15) Troubles in Magnetic Speakers. Weak, tinny sounds may be caused by a damaged or crushed cone near the apex. The cone paper can be strengthened with collodion, which should be allowed to soak in and dry, but it is better to replace the cone. Loud chattering sounds are the result of the armature striking the pole tips, and the unit then requires adjustment. See Figs. 53, 54 and 55. Raspy sounds may be due to iron filings or dirt in the narrow magnetic gaps; these may be removed with pieces of stiff paper forced between the armature and pole tips. Rattling sounds denote looseness in some part of the driving system; either a loose drive pin or a loose cone attachment. Lack of volume may be due to a weak magnet, or poor insulation in the connecting cord, or open coil winding.

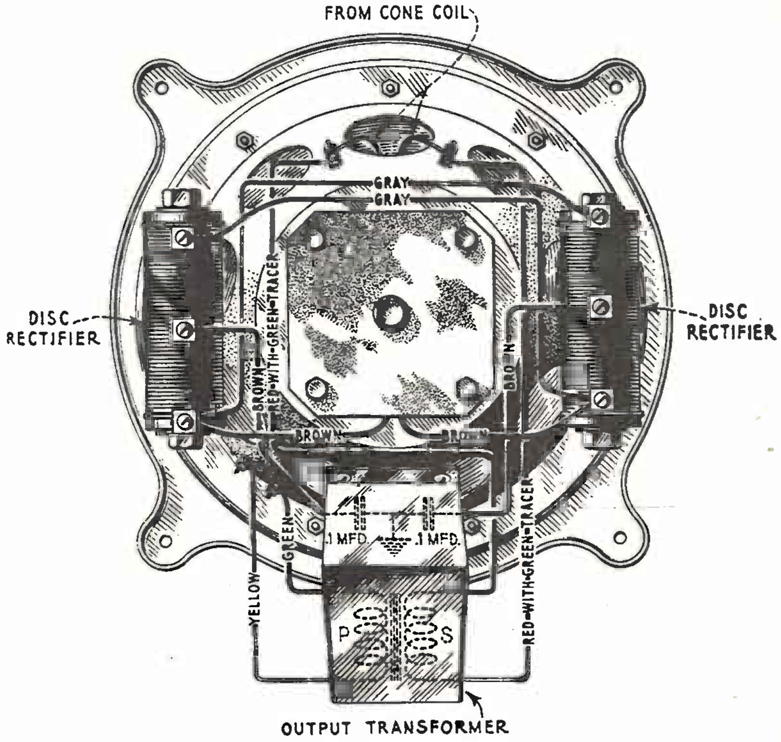

Fig. 50 - Dynamic Speaker used in the Radiola 41 A.C.

(16) Types of Magnetic Speakers. The illustrations, Figs. 56 and 57, show two magnetic units of different

types; the latter called the Inductor Dynamic, in action and sound resembles the dynamic speaker. The armature and cone are free to move a comparatively great distance without hitting the pole tips.

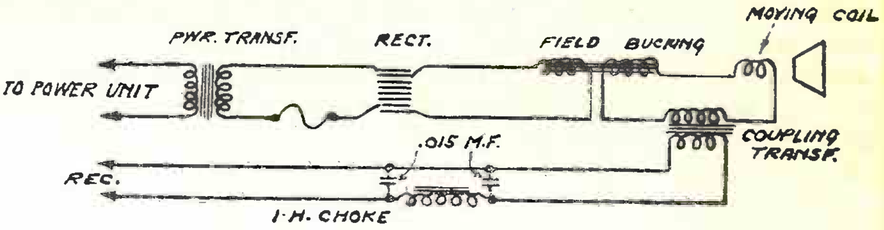

Fig. 51 - An Audio Filter for improved quality.

(17) Horn-Type Speakers. These speakers exist with both dynamic and magnetic units, the former being used largely in talking-picture houses in which a large exponential horn is employed. The latter type was used extensively in radio reception a few years ago but is fast becoming obsolete. Diagnosing trouble in these speakers is similar to that just described and need not be repeated here.

(18) Electrostatic Speakers. These speakers are not in general use as yet, although the Peerless Kylectron employs one. They consist essentially of a condenser, one plate of which is free to vibrate under the influence of electrostatic attraction and repulsion. A high positive biasing potential is employed across them, being taken from the power supply of the set or from a separate rectifier tube. Since only the current leakage need be supplied by the biasing potential, little current is used; thereby eliminating any trouble from hum. The main trouble may arise due to excessive vibration, together with the high voltage accompanying it, causing a short circuit, or intermittent sparking across plate. This either kills reception or produces annoying rattling sounds.

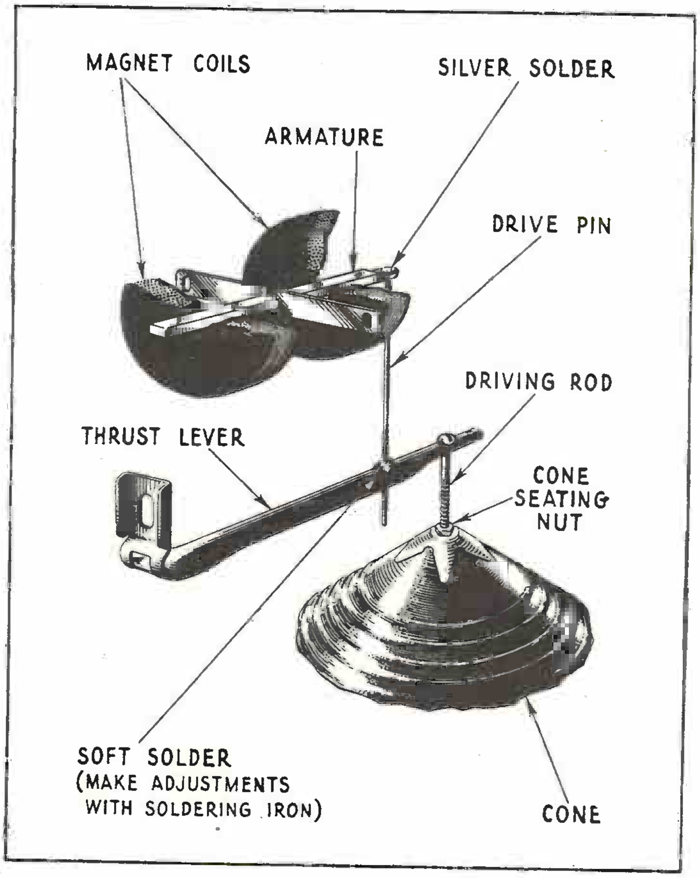

Fig. 52 - Speaker- driving mechanism.

(19) Microphonic Hum. When a microphonic detector tube is in the set, a hum or ringing sound will be produced in the speaker whenever the tube is jarred. It is evident, therefore, that if the sound from the speaker causes the set and microphonic tube to vibrate, a continuous hum will be produced, which will reinforce itself as soon as it sets up its own vibrations in the speaker. The result will be a continuous howl. It is entirely an acoustical effect. Holding the detector

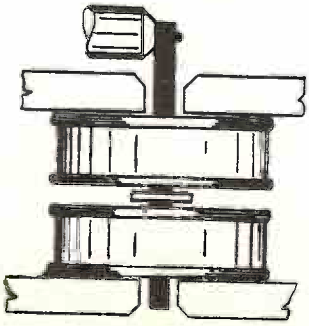

Fig. 53—Correct

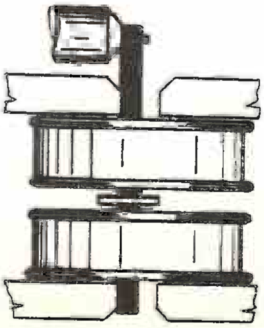

Fig. 54—Incorrect

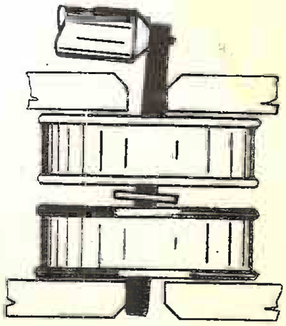

Fig. 55—Incorrect

tube tightly in most cases will prevent it. A "howl arrester" placed over the detector tube also may be used. In bad cases, it may be necessary to change the location of the speaker, or insulate it from the cabinet with felt. Resonance within the cabinet may set up an excessive vibration, which will reinforce this effect and mar the tonal quality. Moving the cabinet away from the wall, or cutting openings in the cabinet, or padding it with felt, may remedy the trouble.

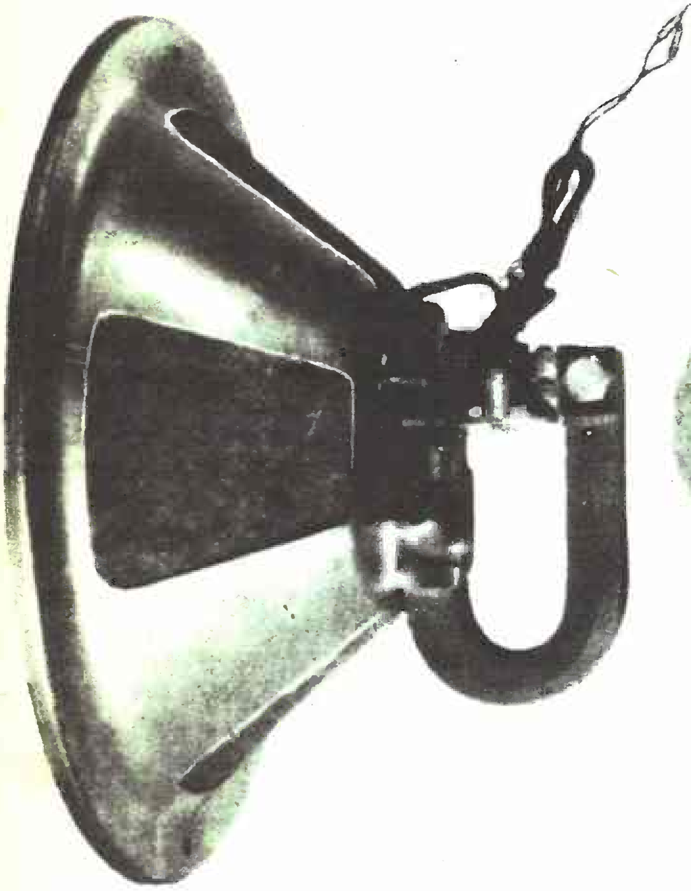

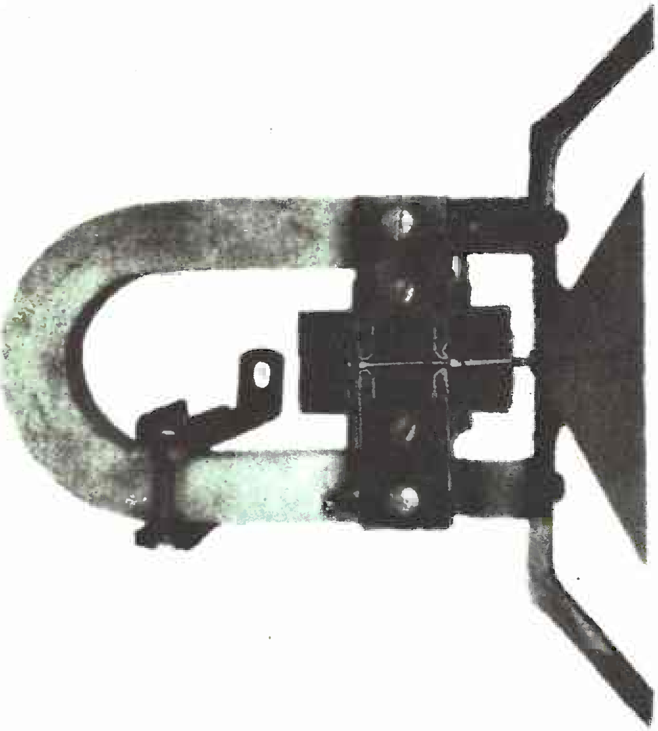

Fig. 56, at the left, shows the Wright-DeCoster Hy-Flux magnetic cone speaker. Note the audio filter mounted near the unit for improved tone quality.
Fig.57, at the right, shows a cross-sectional view of the Farrand Inductor Dynamic speaker. In this unit the armature is attracted in between the pole tips, thus allowing a large movement without chattering.

CHAPTER VI

THE ANTENNA SYSTEM

THE antenna system comprises the aerial and lead-in, with its lightning arrester, and the ground connection. While a good sensitive modern receiver will operate after a fashion on any kind of a haphazard aerial system if the location is fair, remember that a well-constructed antenna system is imperative for permanent set operation and satisfied customers.

(2) Types of Aerials. The busy Service Man will encounter various types of aerials, but the general form comprises a single stranded wire, bare or enameled, about 100 feet long, suspended between insulators from 20 to 50 feet above ground or higher when installed on the roof of a tall building. Attached to this is the lead-in connecting it to the set, with an attachment to a lightning arrester which is connected to ground. There are special types of aerials, such as lamp-socket aerials, indoor aerials, underground aerials, multiple aerials and loop aerials, but these will be discussed subsequently under their proper headings. Trouble shooting in the various types is basically the same procedure. We will concern ourselves mainly with the general type of single-wire aerial first mentioned.

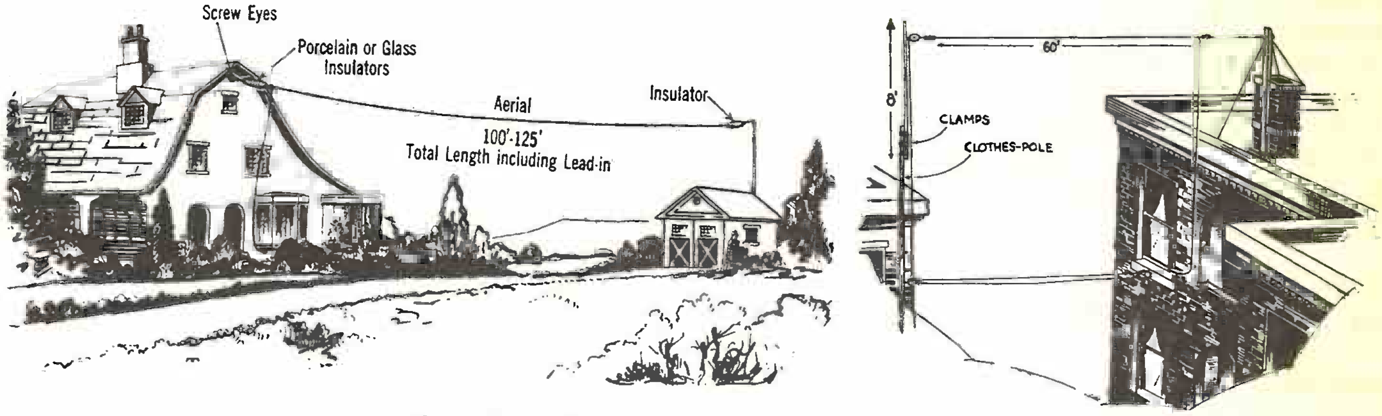

Fig. 60 - Typical Aerial Installations.

(3) Aerial Installation. The subject of aerials comes more under set installation than servicing; but, in either case, care should be taken to see that the aerial is well constructed to insure permanent operation. See the illustrations of Fig. 60. It should be erected as far from other aerials or wires as possible, strung as nearly at right angles as possible to other wires, and placed neither under or over high-voltage lines, which is not only dangerous in case of breakage of a wire but is likely to produce a 60-cycle hum in the set. With a good soldered connection between the lead-in and the aerial (scraping each strand of the aerial wire separately if it is enamelled) little trouble should be experienced with it from thereafter. Many installers don't take the trouble to solder the lead-in connection to the aerial, and in time corrosion takes place, causing an imperfect connection which is swayed by the wind and produces "static" in the set. In cases when it is temporarily impossible to form a good soldered connection, the joint should be tightly bound with tape to protect it from the weather.

(4) Aerial Location. The location of the aerial depends largely upon environment, and one phase of environment usually overlooked and likely to cause trouble is that of the so-called "dead spots," more noticeable in the vicinity of large steel buildings than elsewhere. In such installations, when the set fails to function properly and stations are very weak, changing the direction of the aerial (say 90 degrees or at right angles to its former position) will rectify the trouble. Sometimes it will be

necessary to shift the aerial considerably, and if possible support its free end on some near-by building. Sometimes better results are obtained by eliminating the aerial entirely and making connection to the steel window framework of the building instead. Troubles of this nature are encountered mainly in large cities.

The inverted "L" type of aerial, as this type is called, is slightly directional, and will receive better from a direction nearest the lead-in. This effect may be taken advantage of, especially when long aerials are used, either to improve reception from a certain direction, or to reduce reception from certain near-by powerful interfering stations.

(5) Aerial Tests. A reliable aerial test can be made by disconnecting the aerial from the set and connecting, in place of it, a wire 30 or 40 feet long strung along the room or outside of the window. A comparison of the two will usually indicate if the regular aerial is defective. This test is not always possible, but the efficiency of an aerial can usually be detected by simply disconnecting it from the set. If the set is noisy when it is known that there is no excessive natural static, and the noise ceases with the aerial disconnected, the trouble will probably be found in a loose connection in the aerial or in a near-by aerial in inductive relation with it. Possibly some wire has fallen in contact with the aerial and is rubbing against it; the aerial system should be thoroughly examined. A continuity test between aerial and ground terminals will indicate whether the aerial is grounded or not. A grounded aerial will sometimes work, especially if the ground is at the further end of the wire; in which case it may act as a large closed-loop antenna. If no defects can be observed in the aerial, yet it appears to be noisy, examine the lightning arrester.

(6) Lightning Arrester. The lightning arrester, Fig. 61, may be grounded or partially grounded, by internal defects, and cause a noisy set or kill reception entirely. Try disconnecting the arrester. If the trouble ceases, replace the arrester with a new one.

(7) Length of Aerial. The selectivity of many sets depends largely upon the aerial length, and in many cases where complaints of poor selectivity are received it will be found necessary to shorten the aerial and thereby reduce its fundamental period of electrical vibration to a point below the broadcast band. This shortening also reduces the input to the set and gives the effect of greater selectivity. Usually the same results can be obtained by connecting a condenser of about .00025 mf. in series with the aerial.

Some unstable sets may oscillate furiously with a short aerial and cease to oscillate on a long one, by reason of the greater radiation resistance of the long one, which absorbes more energy from the set. Aerial resistance likewise causes broadness of tuning and poor selectivity. Bare copper wire, which has been exposed to the weather and is corroded, has a greater high-frequency resistance than enamelled wire.

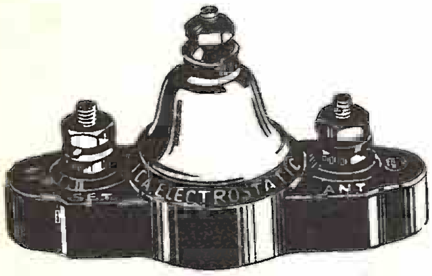

Fig. 61 - Lightning Arrester

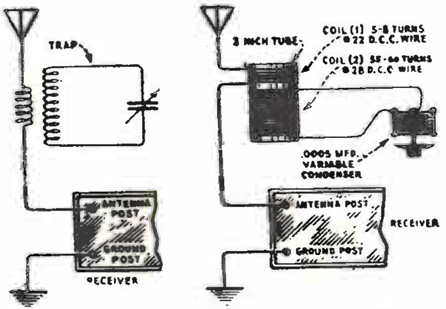

The "absorption" type of wavetrap; to eliminate powerful local interference it may be necessary to increase, to 15 or 18, the number of turns in coil 1.

Fig. 62

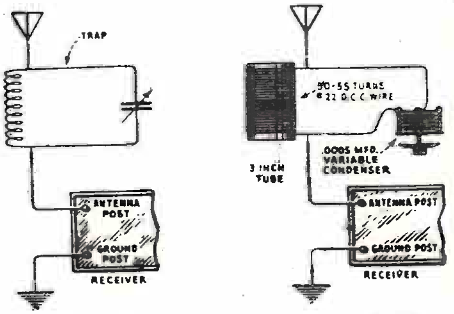

The "rejector" wavetrap is extremely effective in reducing signal interference; but it also causes a reduction in the strength of desired signals.

Fig. 63

Broadness of tuning on a near-by local station may be reduced by the use of a wave-trap, tuned to the interfering station, and connected as shown in the illustrations Figs. 62 and 63.

(8) Lead-In Strip. The lead-in from the aerial is usually connected outside the window to a lead-in strip. This is a flexible-copper, insulated strip with spring-clip connections on each end. The window is jammed down against this strip, forming a convenient entry to the inside where connection is made to the set. The connections to the strip should be soldered or thoroughly taped to prevent corrosion. See Figs. 64 and 65. If the set loses sensitivity during rainy weather, this strip should be examined, as well as other outside aerial or lead-in supports, such as the lightning arrester and aerial insulators. Leakage through wet insulation may cause a grounded aerial, especially if the wet lead-in-strip enters through a steel window casement. This is a frequent trouble in many set installations.

(9) Aerial Length. The length of the aerial to be installed depends largely upon the location. As a general rule, the shorter the aerial employed, if it gets the desired stations, the better the results obtained from the set. Many sets have two or more aerial connections, for short aerial, medium aerial, or long aerial. A 30-foot wire may be considered a short aerial; a 60-foot one a medium aerial, and a 100- to 200-foot one a long aerial. In congested districts, a short aerial is recommended.

(10) Counterpoise. Where it is impossible to obtain a good ground connection, a counterpoise may be used. This consists of a wire similar to the aerial and suspended beneath the aerial or in its vicinity, and insulated from the ground. It proves very effective in many installations. In some cases it reduces hum.

(11) The Ground Connection. In many installations the ground connection is made to the radiator pipe. This is usually the most convenient, and often serves very well. But an additional connection to a cold-water pipe is recommended, especially when the installation is made in one of the upper floors of an apartment house or hotel containing noisy elevators and ice machines. This will not only improve signal strength but reduce interference from noisy motors as well;for these motors are also grounded and the long path to earth from both radio and motor ground connections causes induction between the two. It is important that the pipe be thoroughly cleaned with a file before attaching the ground clamp.

(12) Testing The Ground Connection. A continuity test between the ground wire and a metal pipe in the building will indicate the condition of the ground connection. In some D.C. installations, an insulating condenser is placed in the ground lead, and care should be taken to make the test from the ground side of the condenser to the pipe, otherwise a short circuit is likely to occur, as in Fig. 66. If set noises cease after

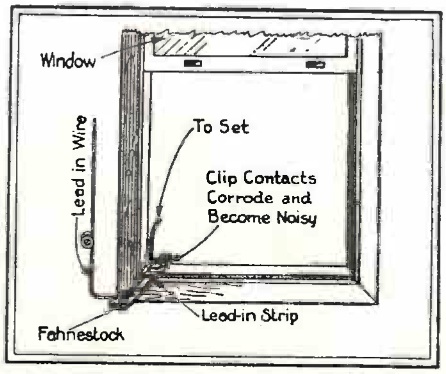

A common form of lead-in installation, which is very good until the exposed connections corrode.

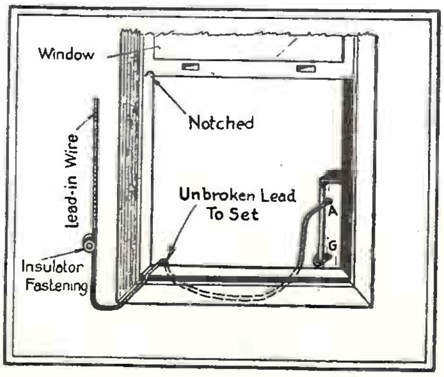

If the insulated lead-in wire is brought inside and a good connection made, it will last.

Direct-current house supplies are a source of much grief in these days of alternating-current standards. Particularly when the tyro starts experimenting is there apt to be trouble—even the simple one of polarity.

Fig. 64- left; Fig. 65- center; Fig. 66- right.

disconnecting the ground wire, examine the ground connection thoroughly, or run an extra temporary ground wire to some other pipe in the building.

(13) Lamp-Socket Aerial. In some congested districts permission for the erection of an outdoor aerial cannot be obtained and some alternative method must be employed. The electric-light lines are sometimes used, by means of a lamp-socket aerial plug. This contains isolating condensers to prevent the lighting current from entering the set. Good results are sometimes obtained, but sometimes noises are introduced, which are difficult to filter out without reducing the signal intensity. It is dangerous to employ this aerial on some electric sets, as a dangerous short circuit is likely to occur.

(14) Indoor Aerials. A wire strung around the room behind the picture molding, or in some other concealed place, serves as an efficient aerial in many locations, but in steel buildings poor results may be expected. It may be used in combination with a lamp-socket aerial.

(15) Underground Aerials. In outlying districts, where space permits, underground aerials may be employed for the reduction of various kinds of interference. While no exact data as to the efficiency of this type of aerial can be given at this time, we have received many satisfactory reports from various experimenters.

(16) Multiple Aerials. The tangled maze of unsightly copper wires, strung in all directions on the roofs of some apartment houses, should inspire all Service Men to recommend some form of multiple aerial to the owner of the building. The illustration, Fig. 67, shows how neat this arrangement can be made(Amy, Aceves and King, Inc.) One well-erected aerial feeds all sets in the building through special coupling devices, thereby simplifying set installation and insuring satisfactory set operation with virtually no trouble from this source. A defective coupling unit will seldom occur, and in this case, it can easily be replaced.

(17) Centralized Radio System. This apparatus, made by R.C.A., will be found in many hotels and apartment buildings. Fig. 68 shows the circuit diagram. It couples a single aerial to as many as 80 receiving sets, without mutual interference, and comprises an RFC unit shown at the left in Figs. 68 and 69, which is mounted on the roof or near the aerial. This unit feeds as many as 8 RFX units (shown at the right of the above illustrations) by means of a twisted three-wire radio-frequency transmission line. Each RFX unit will feed up to 10 radio sets. The amplification gained in these units compensates for any transmission losses.

In other systems one aerial feeds one master radio set usually located in the basement of the building. This set feeds audio power to the various room outlets. Each room, therefore, has only a loud speaker and volume control, with a switch that will select any one of about four stations.

(18) Loop Aerials. The superheterodyne receiver is the most common type that employs a loop aerial. Lack of sensitivity in the set may be traced to poor location in the room; in

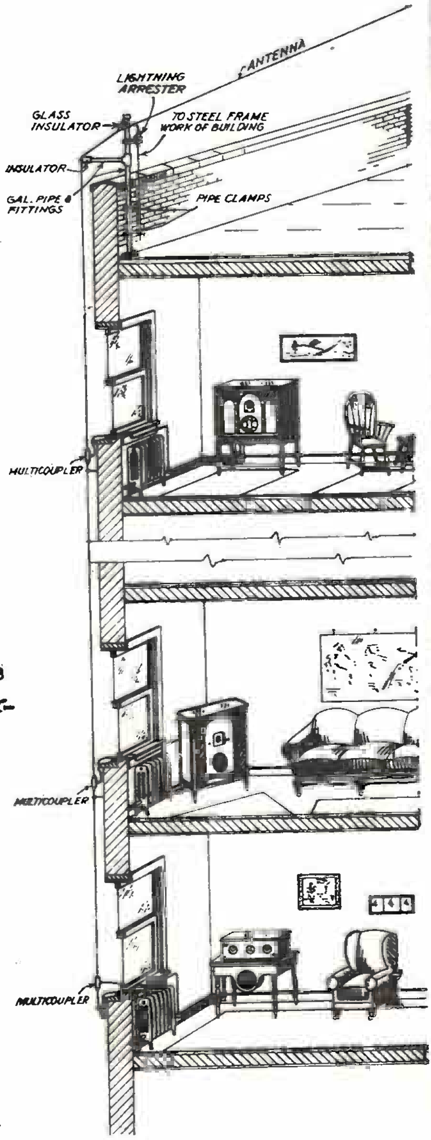

Fig. 67 - One aerial supplies many sets.

a steel building, moving the set a few feet sometimes makes considerable difference. If it is located near a steel column, the directional effect of the loop is usually impaired , the loop receiving its energy directly from the column by induction effect.

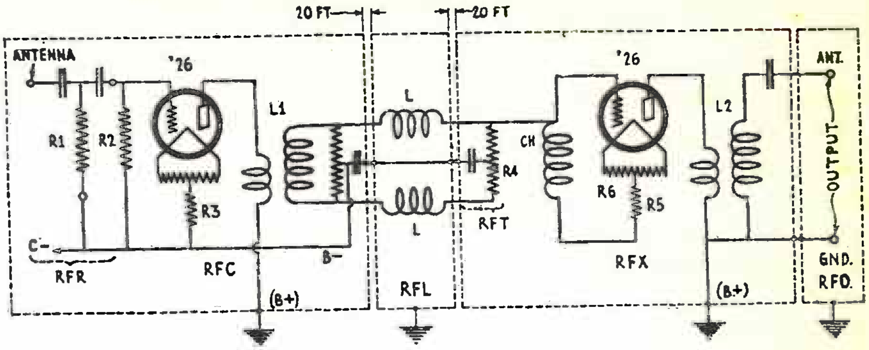

Fig. 68 - Diagram of the R.C.A. centralized radio system

In home-made receivers employing an external loop one sometimes finds a neat-looking flexible telephone cord connecting the loop to the set. The electrostatic capacity of this cord is so great that it is virtually impossible to tune the loop and tuning appears broad. To remedy, connect the loop to the set with two short separate wires.

Often the simplest things cause the most trouble, and one should first make sure that the aerial and ground are connected to the set before making elaborate tests on the latter.

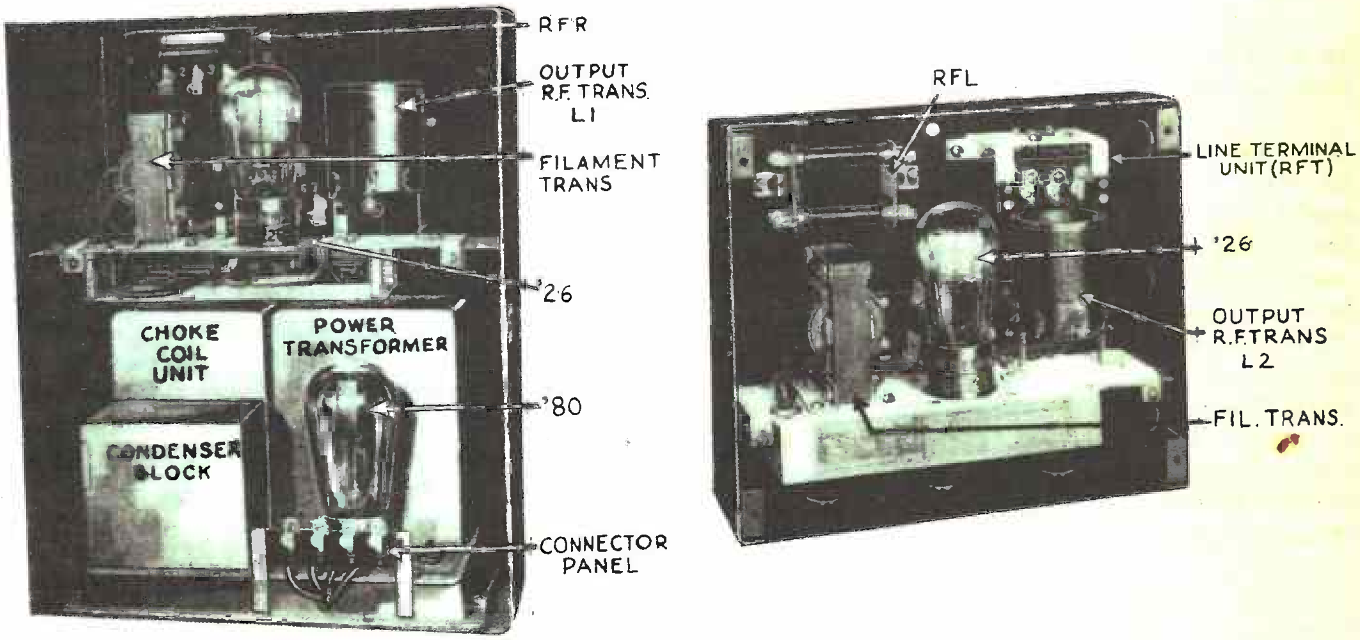

Fig. 69 - at the left is shown the "RFC," or first unit of the system which supplies plate current also for the coupling units.
- at the right is shown the "RFX" or outlet unit which feeds the individual receivers. The "RFT" unit shown in the diagram of Fig. 68, appears only in the last "RFX" on the line.

CHAPTER VII

RADIO-FREQUENCY AMPLIFIERS

FROM the viewpoint of the set owner, the radio-frequency amplifier may be considered as consisting of the tuning dial and the volume control and he will detect the least fault in either. The Service Man, however, must know the insides of the particular set in order to localize the trouble and make repairs. The various commercial set diagrams in this book display the almost unlimited forms in which the above two constituents may exist. Each manufacturer, testing the methods of the others, changes or adds to them in attempted improvements, and a new breed of sets finds its way into the homes of the lay public. Otherwise all sets would be alike. Basically they are alike, but vary in details. These details are important, however, and to point out some of the more salient ones, we shall classify the different types of sets and, in turn, the different elements of which the radio-frequency amplifiers in them are composed. We can first classify sets into those -

(a) without screen-grid tubes,
(b) with screen-grid tubes,

and make a further classification of those using -

(c) conventional tuned circuits,
(d) band selector circuits.

In addition we have superheterodyne circuits. The different methods of volume control, both manually-operated and automatic, will also be included in this chapter.

(2) Conventional Tuned Circuits. In the ordinary tuned-R.F. amplifier illustrated in Fig. 6 of Chapter II, three tuned circuits are employed; the first couples the aerial circuit to the first tube, the second couples the first and second tubes, and the third couples the second tube to the detector. When all three circuits are in resonance, amplification takes place; this means that the three tuning condensers must be accurately adjusted. In modern sets the three condensers are all mounted on one shaft and tuned collectively. For maximum efficiency, the circuits and condensers must be identical; otherwise one circuit will be out of resonance and the over-all amplification will be reduced. Slight mechanical variations in manufactured condensers do exist, however, so "trimmer" condensers (or aligning condensers, as they are sometimes called) are connected in parallel with the main tuning condensers, as illustrated in the diagram mentioned above. These condensers are of small size and small capacity. They are adjusted for resonance at two or three points on the dial and left in the best average position. This adjustment can be done by ear through tuning in stations and adjusting the trimmer condensers for maximum volume; but the method described in Chapter I, Paragraph 15, for balancing , in which a resonance indicator is employed, is more accurate.

(3) Neutralizing. It is evident that, in a radio-frequency amplifier, the output circuits contain radio-frequency currents identical with those in the input circuits, but of a much greater value; therefore, if the slightest degree of coupling exists between the output and input circuits, the amplifier will be thrown into violent oscillation, resulting in decreased amplification and whistling, squealing, and howling everytime a station is tuned in. To reduce this disastrous coupling, the coils and condensers are enclosed in metal shield-cans. But even then coupling exists within the tube itself in the form of electrostatic coupling between the grid, which is part of the input circuit, and the plate, which is part of the output circuit. Various circuit arrangements have been devised to "neutralize" this capacity coupling within the tube. All these circuits depend upon some form of "Wheatstone bridge" arrangement, whereby an equal amount of capacitative coupling of opposite sign is

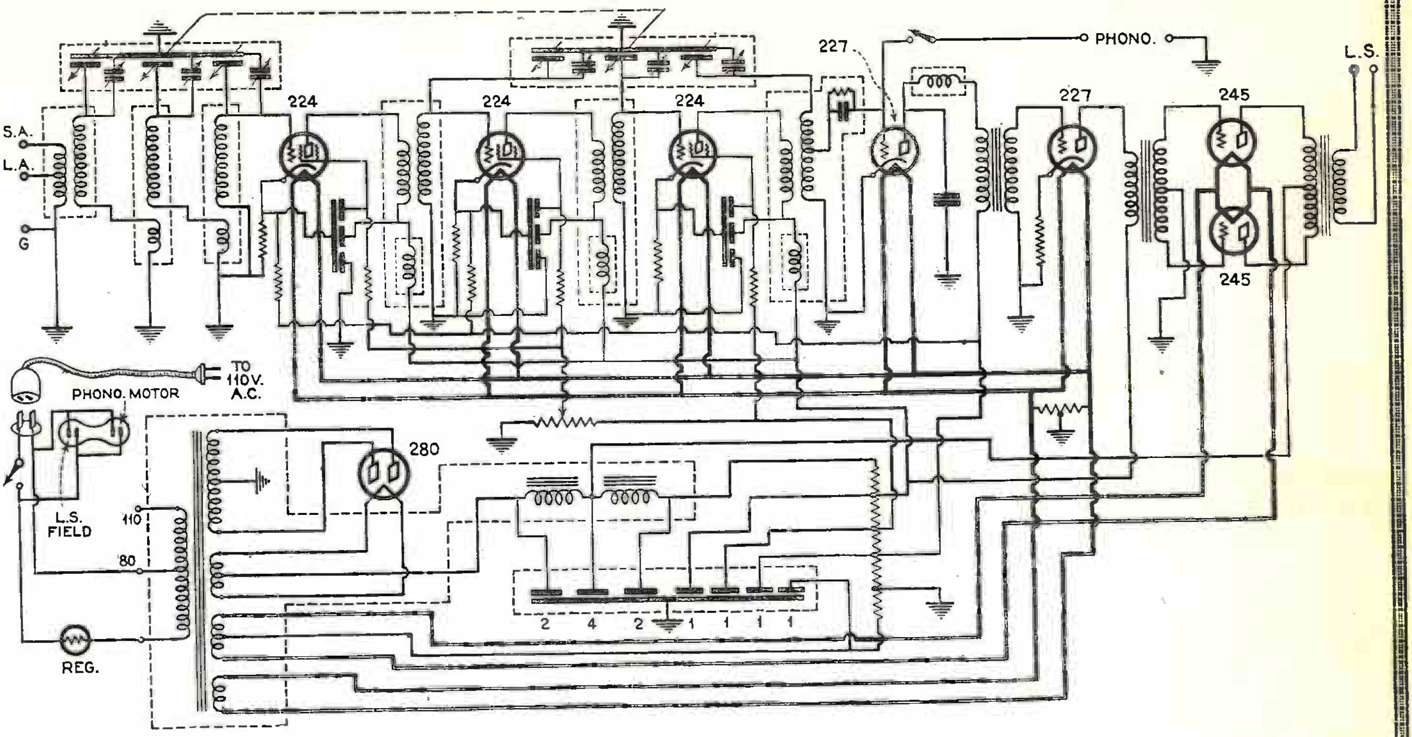

Fig. 70 - Hammarlund "Hi-Q 30"A.C. Receiver.

introduced between the input and output circuits, thus nullifying the effect of the tube-capacity coupling. These various arrangements will not be described in detail here, as the diagrams of the various sets show them. The Service Man is interested only in the neutralizing condenser employed to obtain this balancing effect and how it should be adjusted. These condensers are clearly indicated in the diagram of Fig.6, and the method of adjusting them is described in Chapter I, Paragraph 15. Without instruments, a fair degree of adjustment can be obtained by tuning in a station, insert ing a dummy tube in one socket after the other, and adjusting the neutralizing condenser in each case for minimum or zero sound; at the same time adjusting the trimmer condensers for maximum sound. When correctly adjusted, it should be impossible to make the set oscillate at any point on the dial, with any volume-control adjustment.

(4) The Screen-Grid Tube. Having just described the cause and cure of oscillation in the ordinary tuned R.F. circuits employing three-electrode tubes, it seems fitting at this place to point out the effect which the advent of the four-electrode or screen-grid tube has had on circuit design. The use of metal shields to prevent coupling between the output and input circuits has been described; in screen-grid circuits, the shielding is extended until it exists within the tube itself, in the form of a metal network, entirely encompassing the plate, which is called the screen-grid. This fourth electrode is grounded but maintained at a proper positive-bias voltage, so that it does not interfere with normal tube action. It is evident, therefore, that the input and output circuits are entirely shielded, and feed-back coupling cannot exist. The circuit will not oscillate, and neutralizing is not necessary. In practice, the entire tube or the most vulnerable part of it, is enclosed in a metal shield. A very high degree of amplification is obtained, but the characteristics of the tube are different. It has a much higher impedance, requiring special design of the R.F. transformers. These tubes are made in the ordinary battery type ('22) and A.C. heater type ('24.) See Fig. 41 in Chapter IV.

(5) Band-Selector Circuits. Band-selector circuits are becoming more and more popular, especially since the advent of the screen-grid tube with which they are mainly used.

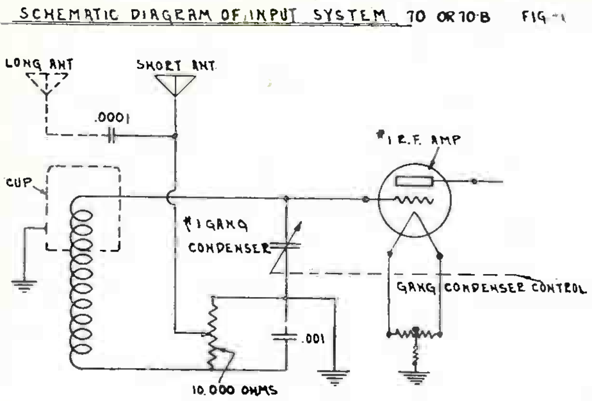

Fig. 71 - The 10,000-ohm resistance is the volume control.

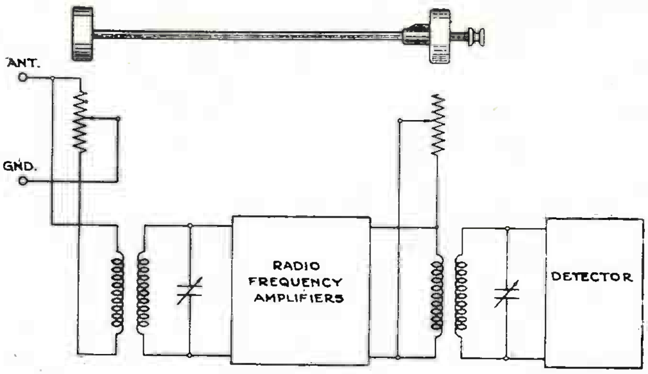

Fig. 72 - Two resistances control the volume simultaneously in this set.

The band selector, or band-pass filter as it is also called, consists essentially of two or more tuned circuits loosely coupled together. This gives a flat-topped resonance curve which, by proper design, can be made to have a flat top 10-kilocycles wide, thereby accepting the entire program, sidebands and all, giving a high degree of selectivity without distortion. The band-selector circuits may be found ahead of the R.F. amplifier, at the input side; they may be part of the amplifier circuit, or may be placed between the amplifier and the detector. Various combinations are possible. In many sets, as in the Sparton "Model 49," (a diagram of which will be found in the back of this book) the band selector will be found between the aerial and the R. F. amplifier, and an untuned or aperiodic R.F. amplifier is employed. That is, the R. F. transformers are of special design to cover the entire broadcast band without tuning. Incidentally, three-electrode tubes are employed in this set. In the Hammarlund "Hi-Q 30 A.C." receiver, a diagram of which is reproduced in Fig. 70, band-selector tuning is employed between the aerial and the amplifier, as well as tuned stages in the amplifier, giving six tuned circuits in all. The six tuning condensers, illustrated in the upper left side of the diagram, are controlled simultaneously by one dial. The six trimmer condensers are also shown. Note the R.F. chokes in the plate-supply leads of the screen-grid tubes; these leads, as well as the grid return leads and screen-grids, are by-passed to the filament through large condensers.

(6) Grid-Bias Volume Control. Various methods of controlling the volume in different circuits are employed. In the old tuned-R.F. sets, it was customary to control the volume by changing the bias voltage on the grids of the tubes. This was effected by the use of a potentiometer connected across the filament circuit; the variable tap connecting to the grid return leads. Thus a bias voltage from zero (at the negative side of the filament) to plus 6 volts (at the positive side) could be obtained. This positive bias on the grids caused excessive plate current, resulting in short-lived tubes and batteries. Also, tuning was broadened because of the R.F. circuit drain from the tuned circuits.

(7) Filament-Current Volume Control. Another simple method of controlling volume was by means of the filament rheostats of the R.F. amplifier tubes. While this is effective, it is not very satisfactory.

(8) Plate-Current Volume Control. A high variable resistor in the R.F. plate leads is commonly employed to control the volume, by controlling the plate current. These resistors are, of course, by-passed by large condensers. This method lengthens the tube and battery life and is quite satisfactory; it is used in the Sparton No. 49 above mentioned.

(9) Absorption Methods of Volume Control. Variable resistors are sometimes inserted in the R.F. circuits to control volume. Grid-suppressor resistors, connected in series with the grids, are also used to prevent oscillation in unstable sets; about 800 ohms

is sufficient. A variable resistor in the input circuit is also common. An example is illustrated in the diagram of Fig. 71, showing the method employed in the Majestic "70" or "70B" sets. Sometimes two variable resistors are employed; Fig. 72 shows how this is done in the Stromberg Carlson No. 638 D.C. receiver. Here two 10,000-ohm resistors, mounted on one shaft, are used; one to control the input to the R.F. amplifier, and the other to control the input to the detector.

(10) Screen-Grid Control. Controlling the positive bias voltage on screen-grid tubes makes a very efficient volume control in sets employing these tubes. This is the method employed in the Hammarlund receiver shown in Fig. 70. It is indicated at V.

(11) Automatic Volume Control. Modern sets are so sensitive, and capable of giving such great volume, that it is annoying to tune for a weak station and suddenly have a powerful local roar in. To avoid this, some sets employ automatic volume controls, which limit the volume automatically. Fig. 73 shows the circuit used in the Stromberg Carlson "No. 846" receiver, which employs a type '27 tube, the grid circuit of which is coupled through a .00025-mf. condenser to the output of the R.F. amplifier. A 2-megohm grid leak is used to prevent blocking of the tube and to hold the grid bias at the proper value. The plate is connected to ground through two 100,000-ohm resistors; but, since the cathode is at a lower potential than ground, plate current will pass through these resistors. The drop across both of them serves to bias the grid of the first R.F. stage, and the drop across one to bias the second R.F. stage. Thus, when the received R.F. signal reaches a certain intensity, current through the resistors decreases; resulting in less negative bias on the amplifier tubes and reducing the amplification. An equilibrium is soon established, in which the volume is maintained at a constant limited value. It seems needless to add that all resistors are thoroughly by-passed to prevent any radio-frequency feed-back; only the voltage drop across the two 100,000-ohm resistors, resulting from the average signal-intensity value, is instantaneously and automatically fed back to the R.F. amplifier grids. Many other sets use similar controls, such as the Kellogg 523 and 526 shown in the diagram section of this book.

(12) Radio-Frequency Amplifier Trouble. Trouble in R.F. amplifiers resolves itself into:

(a) lack of sensitivity,
(b) broad tuning,
(c) oscillation,
(d) noise,
(e) lack of control.

All of these symptoms may be due to poor tubes or wrong supply voltages; but, since we have described voltage tests and tube tests in chapters III and IV, we will limit this chapter to searching for trouble within the remaining parts of the system.

(13) Lack of Sensitivity. This may be attributed to: poor alignment of the tuning condensers, an open circuit in the input or some part of the system, shorted coils, an open or shorted by-pass condenser. In fact, any default in the circuit may contribute to decrease sensitivity or kill reception entirely. It is probably simpler to test the coils and condensers than to read about all the things that might happen. Even damp weather

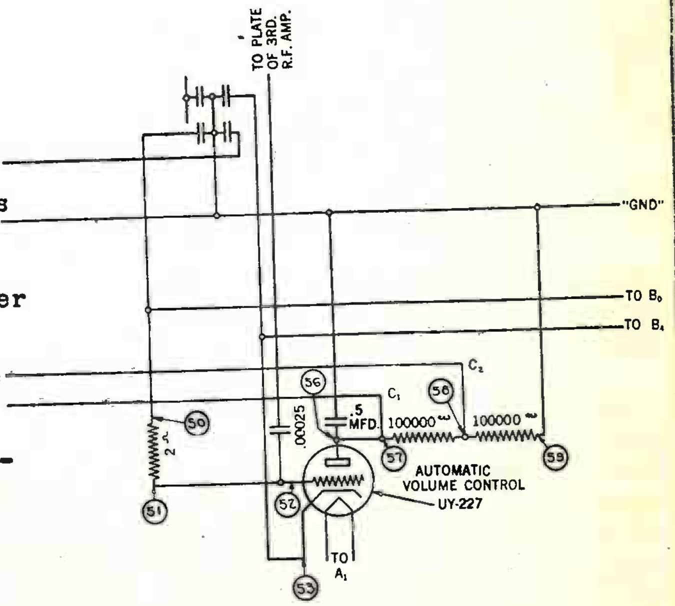

Fig. 73 - Automatic volume control circuit.

is detrimental, as shown in Fig. 74. This shows the results of an actual test. A usual fault in R.F. amplifiers is an open coil winding. The windings should be tested for continuity; a full reading indicates either good coil or a shorted coil. The latter is difficult to detect but, fortunately, is not a common occurrence. A visual examination will usually reveal any damaged condition. Lack of plate voltage at the tube sockets may indicate an open primary winding, or an open choke-coil winding in some sets in which the plate current does not pass through the R.F.T. primary (such as the Stewart Warner "Series 900" receivers.) It may be difficult to solder an open-circuited winding together; the best method is to rewind the coil, making note of the number of turns, size of wire, directions of winding, and external connections. So far as the tuning condensers are concerned, a visual examination is usually sufficient; they should be thoroughly cleaned and the pig-tail connections examined. The method of aligning them for maximum resonance has already been explained in Chapter I.

(14) Broad Tuning. Lack of sensitivity and broad tuning usually go hand in hand. The troubles just described in the preceding paragraph apply here also. Unless some previous Service Man has left a soldering iron or screwdriver inside of one of the shield cans, we may find the cause of broad tuning in the aerial system, to which a separate chapter has been devoted; or in an incorrect "C" voltage on the tubes, or in some defect in the circuit or volume control. The usual complaint from this trouble is found to be due to the closeness to some broadcast station; the fault is not in the set then, and the Service Man is not expected to improve the set far beyond its original abilities. Extreme sensitivity, like a powerful telescope, has the effect of bringing the stations nearer, and also results in complaints of broad tuning. In these cases a shorter aerial is recommended or a wavetrap may be required, as described in Chapter VI. Damp weather causes broad tuning in many sets, due to moisture impregnating the insulation of the coils. If complaints spring up during the damp season, it is well to bear this in mind. See Fig. 74.

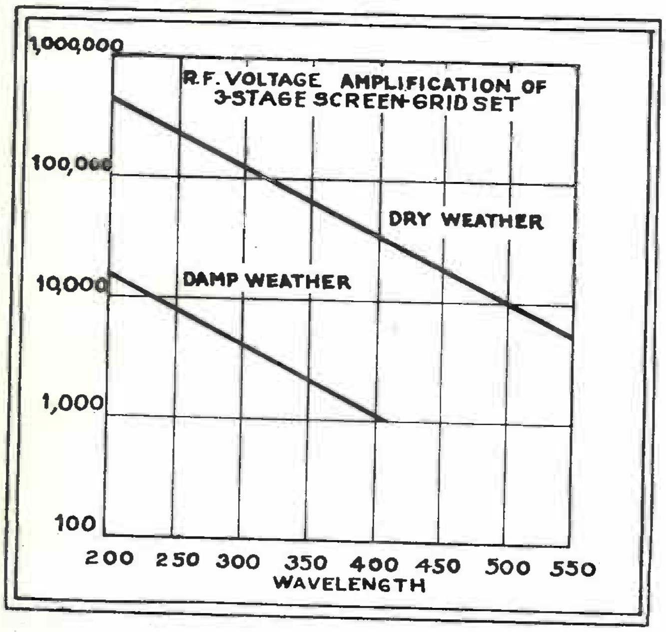

Fig. 74 - The effect of damp weather on R.F. amplifiers.

(15) Oscillation. Either the shielding is poor, the connecting leads are lying in the wrong positions, or the set is not neutralized. In some sets a defective volume control may cause oscillation. This trouble manifests itself by penetrating squealing, howling and whistling sounds while tuning in a station. There is feed-back coupling somewhere in the set to cause oscillation. Perhaps the antenna lead is too near the detector output region. Check the tubes, tube shields and supply voltages.

(16) Noise. Noise is invariably caused by loose connections, either within the circuit or near to it; as in the case of loose shield-can joints that reflect noises into the circuit, due to their absorbing of energy from it. Loose socket contacts are a common occurrence; also, loose soldered connections to the coils and loose pigtail connections to the condensers. Rubbing contacts on the condensers are also noisy. Condenser plates which touch cause noise, as well as fine metal burrs on the plates, or dirt between them. The volume control is a frequent source of noise; it should be cleaned with alcohol and oiled with Nujol. (This applies to filament rheostats also.) Sometimes a soft lead pencil rubbed on the resistance wire will give sufficient lubrication, due to the graphite, without interfering with the contact.

(17) Lack of Control. Lack of control of the set indicates a defective volume control. In virtually all cases the volume control is a variable resistor of some sort, and it is apt to be worn out from mechanical usage rather than electrically destroyed. Knowing its approximate resistance from the circuit diagram, it may be intelligently tested with a continuity tester, and preferably replaced rather than repaired, if defective. If the set has an automatic volume control, the tube may be at fault and should be tested. By-pass condensers may be shorted, or resistors open; with a continuity tester, almost all faults can be found. Hum may be introduced into the R.F. amplifier, due to electrostatic induction from some nearby high-voltage A.C. line.

(18) Superheterodyne Receivers. A whole volume could be written on the servicing of superheterodynes; but we only have space for the high spots, and let the reader's imagination dip into the valleys wherever it is indicated that he should do this. Owing to the comparative complexity of the superheterodyne, many things can happen to interrupt its service; but, if we segregate it into its main components and test each separately, we may find that the servicing of one superheterodyne is like servicing two ordinary sets. In the superheterodyne we have:

(a) oscillator,
(b) radio-frequency amplifier (in some sets),
(c) first detector,
(d) intermediate-frequency amplifier,
(e) second detector,
(f) audio-frequency amplifier.

Parts e and f are considered in chapters VIII and IX. Various superheterodyne circuits appear in the diagram section of this book. No matter how complicated the set, if we test one thing at a time we can't help but find the fault if it exists. With all parts of the proper values and properly connected, the set will work, because it did work before the trouble started. Knowing the circuit diagram and the values of the parts, it won't take long to make the tests and make repairs or substitute new parts.

(19) Servicing Supers. Since there are a variety of superheterodyne circuits in use - the greatest variety being the home-built ones assembled from "kits" - it is virtually impossible to list all the causes and cures of troubles that may occur in them. Of the commercial supers, the Radiola is probably the most numerous, and a detailed analysis of the "Radiola 25" Superheterodyne appears in the Radio Data Service Sheet in the diagram section of this book.

CHAPTER VIII

DETECTORS

THE detector plays a very important part in every radio receiver - it is the pivot on which the radio-frequency amplifier and the audio-frequency amplifier hinge. Linking the two amplifiers, it could well be described in connection with either, but, since it plays such an important part in radio reception, we will devote a separate chapter to it.

(2) Function of Detector. The function of the detector in the ordinary broadcast receiver is to convert the form of the energy delivered to it by the radio-frequency amplifier to a form suitable for amplification by the audio-frequency amplifier and for sound reproduction by the loud speaker. In other words, in the input or grid-circuit side of the detector we have modulated radio-frequency currents and in the output or plate side, audio-frequency currents. Both forms of current may exist in both input and output circuits, in which case trouble results in some sets, while in others, employing regeneration, this phenomenon is utilized to advantage. In the superheterodyne receiver, two detectors are used, but their basic action is the same. One links the radio with the intermediate-frequency amplifier and the other links the intermediate with the audio-frequency amplifier. In the first case, the highest frequency is wiped out, leaving the intermediate frequency; in the second case the intermediate frequency is wiped out, leaving the audio frequency. Since the detector converts the radio energy into audio energy, it should do this work without distorting the audio-frequency wave shape or discriminating between high and low audio frequencies; it should effect this conversion without great loss of energy, and should introduce no extraneous noises in the set.

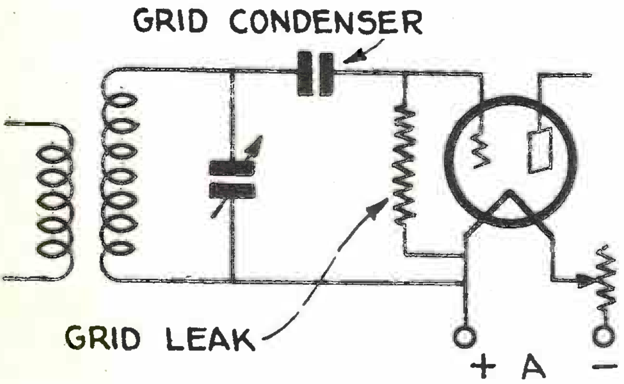

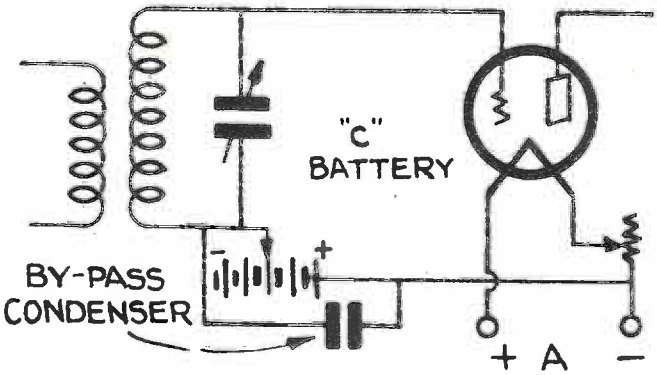

Fig. 77 - (left) Grid Leak and Condenser Method of Detection.
Fig. 78 - Power Detection using a "C" Battery.

(3) Simple Detector Circuit. A simple detector circuit employing a three-element tube (such as the 'OIA) is shown in Fig. 77. In this circuit, the modulated R.F. current is impressed on the grid of the tube through a grid condenser. The rectifying action of the grid and filament portions of the tube will allow the positive half cycles to pass through to the filament or return side of the input circuit; but the negative halves will be trapped and will accumulate on the grid. The intensity of this accumulation varies in accordance with the intensity of the input, which, we know, varies at audio frequencies; resulting in a similar audio plate-current variation. The grid leak resistance of several megohms allows the accumulating negative charge to leak off slowly. This holds the mean grid potential at a constant value and prevents an excessive accumulation which would block the tube action. It is evident, therefore, that the values of the grid condenser, grid leak and the plate voltage are important factors in determining detector efficiency.

(4) Grid-Bias Detector. This method is called "plate detection" and makes use of the "bend" in the lower portion of the "characteristic curve" of the tube for its effect.

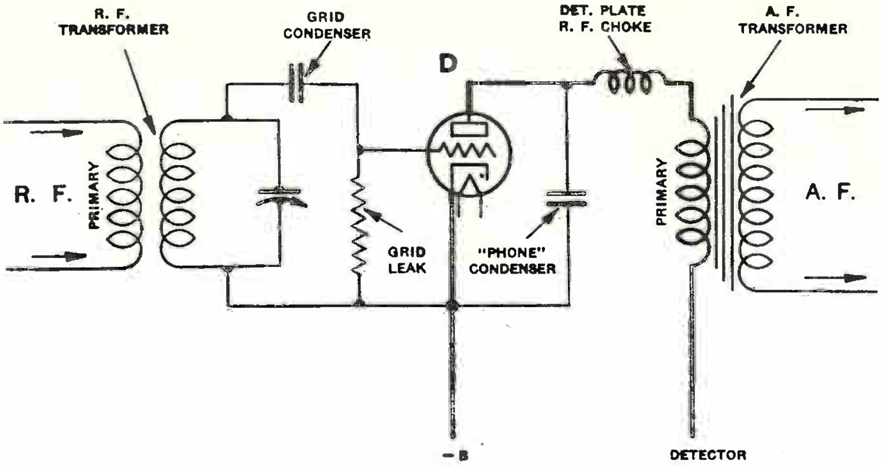

Fig. 79 - The '27 type tube detector using a condenser and leak.

See Fig. 39 on page 31. To operate the tube on this bend, a negative grid-bias voltage is necessary. This may be obtained from a "C" battery or from the voltage drop across a resistance. No grid condenser or leak is used , as shown in Fig. 78. Such a detector works by virtue of the fact that one side of the R.F. alternations is suppressed, allowing the A.F. modulations of the other side only to produce A.F. current variations in the plate circuit. As a rule, this method is not as sensitive as grid-leak detection, but the audio quality output is considered better. It is important that a very accurate adjustment of the grid-bias voltage and plate voltage be maintained. The grid-bias resistance or "C" battery must be by-passed by a condenser of at least 0.5-mf. capacity.

(5) The A.C.Detector. Both the detector methods just described were used in battery sets, but the same methods are used with the heater-type tubes in A.C. sets. Fig. 79 shows the grid condenser-and-leak method used with the type '27 tube, and Fig. 80 the grid-bias method, or plate detection. A "C" battery is seldom used in an A.C. set, as grid voltages are easily obtained from drops across resistors through which the plate current flows. Note the by-pass condenser across the bias resistor in Fig. 80.

(6) Power Detection. The sensitivity of a detector to weak signals depends upon the values of the plate voltage, the grid condenser and the leak, or grid-bias, voltage. Usually 22½ to 45 volts is sufficient for the plate. A detector designed for weak signals would be unsatisfactory for operation where comparatively large amounts of radio-frequency energy is encountered - as in some of the modern high-powered sets. In these, power detection is used. The basic action is the same, as shown in the schematic circuit of the power detector used in the Stromberg-Carlson "No. 846" receiver illustrated in Fig. 81. The main difference is that a plate voltage of 250 volts is employed with a grid-bias voltage of about 28 volts. Where these detectors are used it is seldom that more than one stage of audio-frequency amplification is required; the detector feeds directly into the push-pull power stage, resulting in very quiet operation with excellent quality. The values of the parts are given in the illustration.

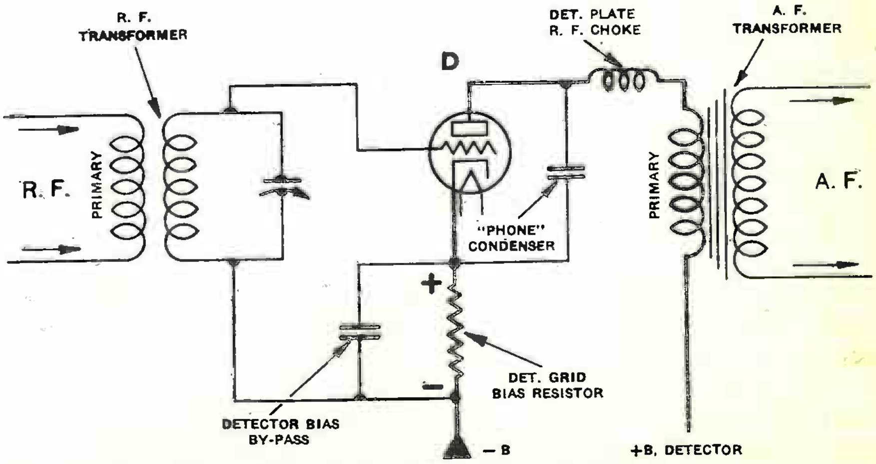

Fig. 80 - The '27 type tube using power detection and grid-bias resistor.

(7) Regenerative Detectors. Regenerative detectors are seldom used in modern multi-tube radio sets, and we will not describe them in detail. It is sufficient to state that the circuits are similar to those given, except that

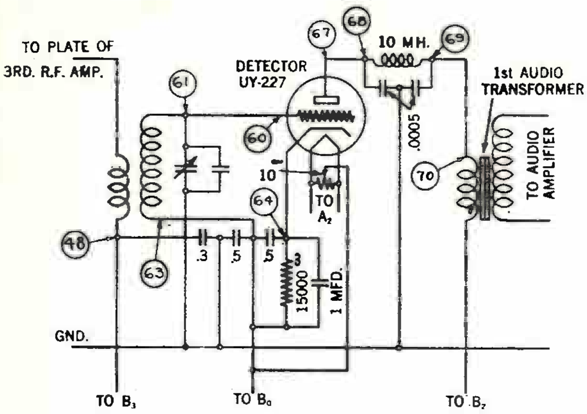

Fig. 81 - Linear Power Detector.

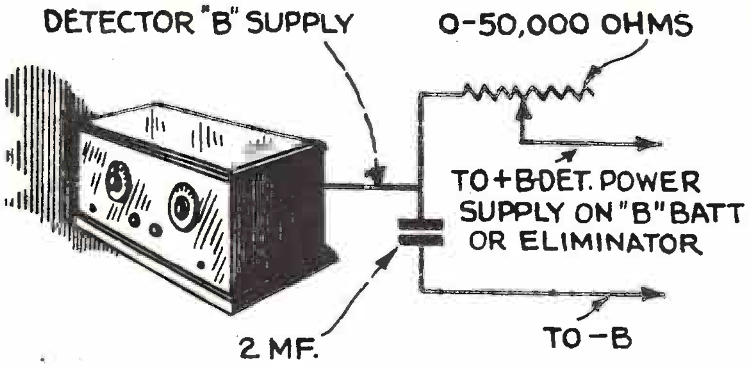

Fig. 83 - A resistor and condenser eliminates audio regeneration.

part of the audio-frequency energy existing in the plate circuit is transferred back to the grid circuit by means of a "tickler" coil connected directly in the plate lead. This reinforces the grid current and builds up the signal strength.

(8) Microphonic Howl. Microphonic howl is one common source of trouble in detectors, especially those employing battery-type tubes. The heater-type A.C. tubes give practically no trouble from this source. In extreme cases, it is necessary to exchange the tube in order to eliminate the howl, or use a cushioned socket or "howl arrestor." See Fig. 82. Since the detector is connected to the input side of the audio-frequency amplifier, it is extremely susceptible to audio vibrations or current variations, which explains the excessive tendency to microphonic howl in this particular tube. The grid-bias or plate-detection type is less susceptible; as far as audio-frequency currents are concerned, the grid may be considered as connected directly to the filament or cathode, thereby preventing the detector from acting as an audio-frequency amplifier, which it is when a grid condenser and leak are used.

(9) Audio-Frequency Oscillation. This is partially due to the audio-frequency amplifier, but may be eliminated in many cases by correcting the detector. Audio oscillation manifests itself usually in a high-pitched squeal, caused by feed-back coupling in the "B" battery or supply circuit, from the output of the audio amplifier to the detector input. A 2-mf. by-pass condenser connected between the detector "B plus" lead and the filament will usually prevent it. An audio choke or high variable resistor connected between the power-supply lead and the condenser also helps and proves very beneficial in many cases. See Fig. 83. Changing from grid condenser - leak detection to grid-bias detection also helps in extreme cases.

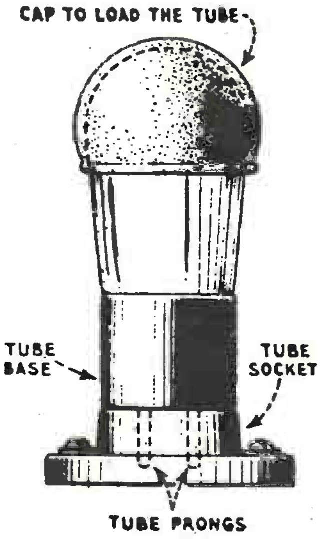

Fig. 82 - Howl Arrestor.

(10) Sensitivity. Lack of sensitivity in the detector is usually due to a poor tube, or to wrong plate or filament voltages. An open grid leak or condenser is a contributing cause.

(11) Noise. In addition to microphonic howl, noise is caused by a poor or loose grid-leak resistor or dirty socket connections.

(12) Hum. Hum is usually caused by induction from near-by A.C. circuits, due to poor shielding or lack of proper by-pass condensers in the grid and plate circuits.

(13) Overloading. In modern powerful sets using power detection, the detector is sometimes overloaded, causing distortion or "dead spots" on the tuning dial. The latter produces the effect of double resonance. The station may be slowly tuned in, approaching a maximum of volume as the set approaches resonance, until the detector is overloaded, causing a decrease in volume with the set tuned to resonance. Tuning beyond resonance removes the overload from the detector and the volume increases again. One may be deceived by this and think that the tuning system is out of order, when in fact the detector is at fault. In this case, the plate voltage should be adjusted to suit the particular location of the set, depending upon its proximity to broadcast stations and the particular stations that the customer desires. The grid leak or "C" bias voltage should be correspondingly changed.

(14) Filter Circuits. The radio-frequency energy that passes through the detector would cause havoc in the audio-frequency amplifier if it were not filtered; noisy, choked, distorting sounds would result. Usually a single .0005-mf. by-pass condenser, connected between the plate and filament of the detector, or across the primary of the first stage audio transformer (or the plate resistor in a resistance coupled amplifier) will suffice. A better filter is illustrated in the circuit of Fig. 81. Here two condensers of .0005-mf. each and a 10-mh. choke, connected as shown, are used. A filter of this kind could with advantage be easily added to a set having the above trouble. It will not interfere with the normal audio quality.

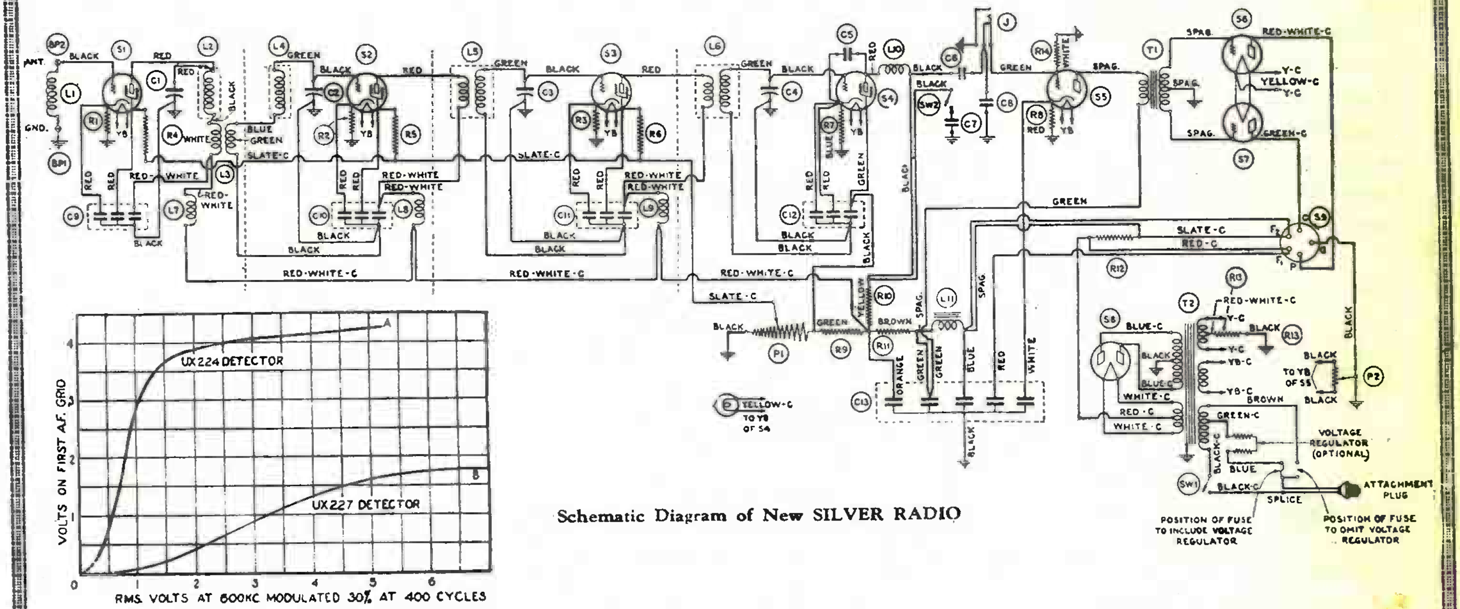

Schematic Diagram of New SILVER RADIO

Fig. 84 - Diagram of the Silver-Marshall 720 A.C. screen grid receiver is shown above. This set employs a screen grid power detector, S4, with a 60,000 ohm grid bias resistor, a "B" voltage of 170 volts, and a plate resistor of 300,000 ohms; the first audio stage being resistance coupled. The curves at the left show the comparison of the screen grid power detector with the type '27 tube detector circuit. Excellent audio quality at high volume is reported by users of this set.

CHAPTER IX

AUDIO-FREQUENCY AMPLIFIERS

SINCE the audio-frequency amplifier determines the tone quality of the set, other things being normal, it is important that this part of the set be kept in the utmost of condition and that the tubes, transformers or other coupling devices and parts, as well as the supply voltages, be maintained in accordance with the specifications supplied by the manufacturer of the set. Good tone quality pleases the set owner. Poor tone quality pains him and breeds trouble for the Service Man - or may we call it pleasure, if he enjoys his work?

(2) Types of Audio Amplifiers. Audio amplifiers vary in the forms of interstage coupling and the types of tubes employed. There are many varieties in the thousands of sets in everyday use. The most common employs transformer coupling between stages. Others employ impedance coupling. Then there are the troublesome resistance-coupled ones, quite popular a few years ago and now not so common, yet again coming to the foreground in the form of direct-coupled amplifiers; to wit, the Loftin-White amplifier. With these three main groups, and from one to three stages in each amplifier, together with a wide variety of tubes, it is evident that many combinations can be produced, and such is the case. Yet trouble shooting is comparatively easy if we centralize our efforts on the coupling devices, tubes, connections and the supply voltages; the latter are assumed to be correct since we have already attended to them in Chapter III; and tubes we have tested and corrected in Chapter IV, leaving our present work limited to the coupling device and connections. Therefore, with the connections and coupling device correct, the amplifier will work. Of course, improvements may be made in the general tone quality and volume of many sets by changing the form of the audio amplifier, but the Service Man is not usually called upon to do this work.

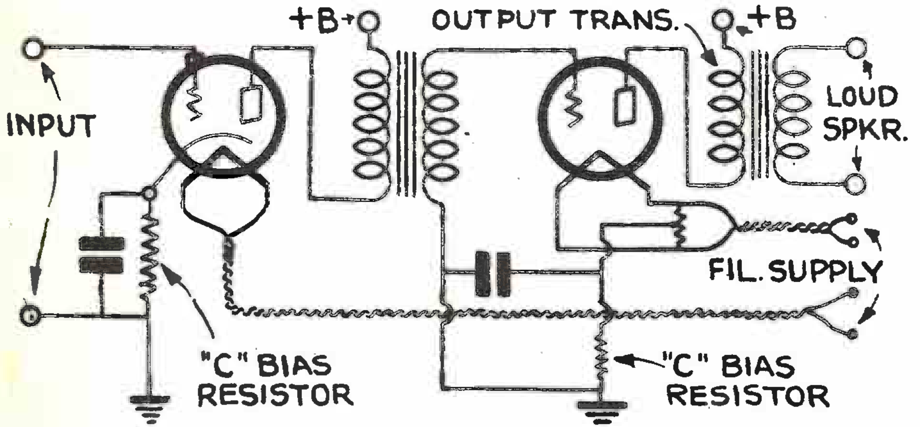

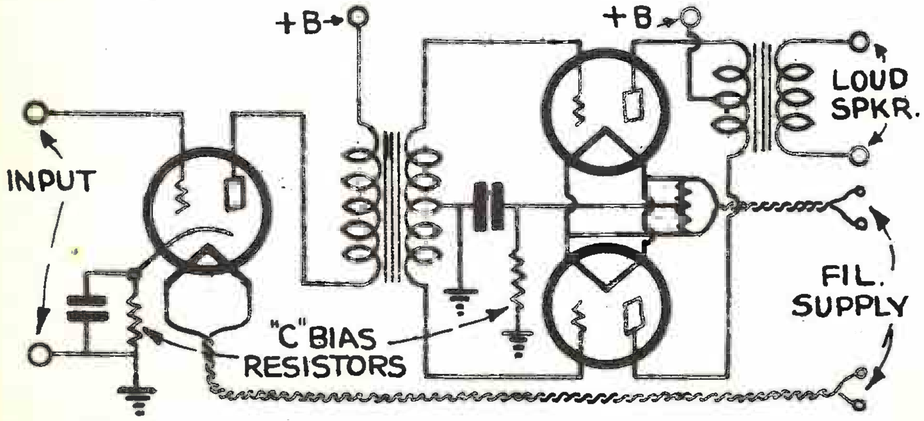

Fig. 85 - above. Standard 2-stage audio amplifier.
Fig. 86 - below. A push-pull audio amplifier circuit.
Both circuits are for use on A.C. electric sets.

(3) Transformer-Coupled Amplifier. A two-stage transformer coupled amplifier is most generally used and, in many cases, the second stage is of the push-pull type (illustrated in Fig. 86, as compared with the ordinary type of Fig. 85.) Push-pull arrangement gives greater output - which is demanded by electrodynamic speakers. Parallel tubes connected in the last stage give greater output than a single tube, but two tubes in parallel are not equal to two in push-pull. In almost all cases, an output transformer or output choke coil-and-condenser is employed as shown, to couple the amplifier to the speaker; matching their electrical characteristics and eliminating the D.C. plate current from

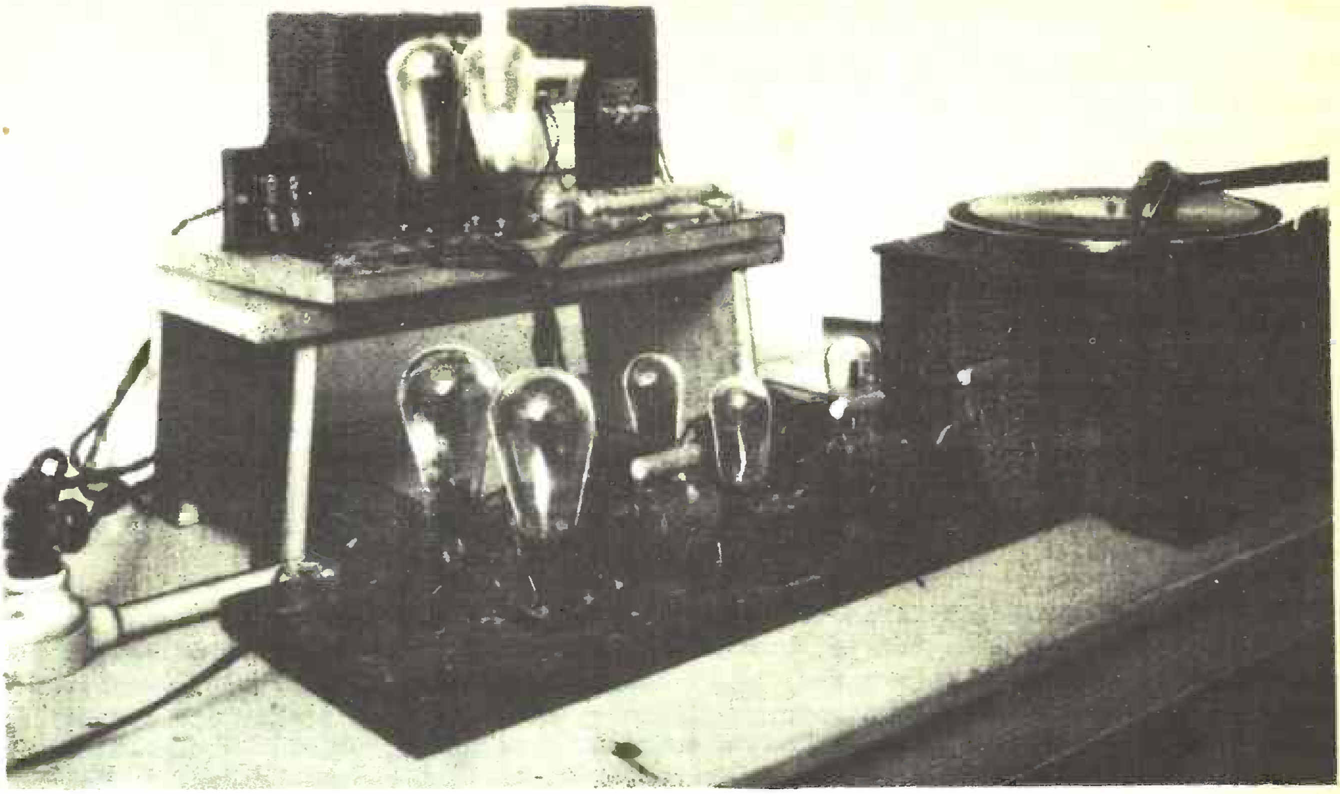

Fig. 88 - Thordarson '50 push-pull amplifier. A single and two push-pull stages are employed. The power supply is at the top. Note the output transformer in the lower left.

the speaker windings. In sets not employing power tubes, the speaker may be connected directly in the plate circuit without the use of an output coupling device, but in all push-pull amplifiers the coupling device is necessary, because of the circuit arrangement, unless the speaker winding has a center tap (which few have) or two speakers are used. Further reference to speaker coupling devices will be found in Chapter V. Some modern sets employ only one stage of audio amplification; the output from the power detector feeding directly into the push-pull audio power stage. See Chapter VIII. Tone quality with a minimum of hum is thereby obtained, at the expense of sensitivity, which must be compensated for in the radio-frequency amplifier.

(4) Transformer Tests. Lack of plate voltage at the tube socket indicates an open transformer primary winding, or a plate circuit open somewhere in the connections. Lack of grid-bias voltage indicates an open transformer secondary winding, or a grid circuit open somewhere in the connections. A continuity test on the transformer windings will reveal their condition. If the meter of the continuity tester reads full, the winding is short circuited; if the reading is zero, the winding is open or burnt out. The latter is a common occurrence in transformer primaries, which carry the plate current. If only a partial reading is obtained, the winding is intact. These windings have a rather high resistance which is indicated by the partial reading of the continuity meter. When a damaged transformer is located in a set, it should be replaced with one of the same type. Tests should also be made between the primary and secondary windings and between the windings and the core; in these tests the readings should be zero. A full reading indicates a short, and the transformer should be replaced. After the transformer has been disconnected from the set, the wiring in the set should be tested as the short may be in the external wiring to the transformer. Noise in transformers is common, and is due to a poor or loose connection within the instrument. To test, connect a $4\frac{1}{2}$-volt "C" battery, in series with a headset, to the winding under test and listen for noise. No sound except the initial click will be heard if the

transformer is in good condition.

(5) Special Circuits. Some transformers employ a core of special alloy which is more susceptible to magnetic influences than iron. When continually subjected to the magnetizing effect of the plate current of the tube, the core loses its qualities and the resultant tone quality of the set is impaired; bass notes are lacking. When other faults cannot be found in the amplifier, it is well to replace the transformers. Special circuits have been developed to prevent this trouble. In the circuit of Fig.31 (shown on page 26), methods known as "series plate feed" and "parallel plate feed" are employed. The former is shown in the connections of the first-stage transformer. A series resistor, R1, by-passed by the 1-mf. condenser, limits the plate current to a safe value. The parallel plate feed method is represented in the second or push-pull stage connections; here the D.C. plate current passes through a choke coil, the audio-frequency component of the current passing through the 1-mf. coupling condenser to the primary of the input transformer. Note the 50,000-ohm resistors R2 in the grid return circuit of the input push-pull transformer. These are to suppress any cross-current "parasitic" oscillations that might develop in the push-pull tube circuit and introduce distortion and noise.

(6) Resistance-Coupled Amplifiers. Ordinary resistance coupling does not give as much amplification per stage as can be obtained from transformer-coupled amplifiers, consequently when it was first introduced, three stages were used. With present receivers, having more efficient radio-frequency amplifiers, more than two stages are seldom employed, with a consequent reduction in sources of troubles. Usually a combination of transformer and resistance coupling is encountered, as in the Atwater Kent "Model 55" and "55C" receivers; here the first stage is resistance coupled and the second stage push-pull transformer coupled. Fig. 48, page 41, shows the first (resistance) stage in this set. The detector and first audio tubes are indicated, together with the "C"-bias resistors and detector-plate filter system. The coupling unit comprises a plate resistor, a blocking condenser and a grid-leak resistor. The audio-frequency current passing through the plate resistor causes voltage variations across it, which are applied to the grid of the following tube by means of the condenser. The purpose of the blocking condenser is to prevent the positive potential of the plate circuit from direct contact with the following grid, which would place a positive bias on it and kill the tube action. Resistor and condenser values vary, in accordance with the requirements of the tubes used.

(7) Troubles in Resistance-Coupled Amplifiers. Many things can happen to a resistance-coupled amplifier to throw it out of kilter; the most common faults are wrong plate voltages and wrong resistance values. Some resistors change with age. Power supply leads to the plate circuits should be thoroughly by-passed, to prevent motorboating, as indicated by the "detector filter condenser" of Fig. 48. A leaky blocking condenser is disastrous, resulting in excessive plate current in the following tube. On the other hand, an open or disconnected blocking condenser will prevent the transfer of voltage variations (signals) from one tube to the next, but will not effect voltage and current readings at the tube sockets. Since the condensers are seldom over 0.1-mf. in capacity, a continuity test or crude capacity measurement will not reveal the open. A quick check is to connect another condenser in parallel with the questionable one and note the results. Aside from checking the resistors and all condensers in the circuit, as well as the supply voltages, there is little to do in the resistance-coupled amplifier. It is well to remember that special "High-Mu" tubes (such as the type '40) have been developed especially for resistance- and impedance-coupled amplifiers and should not be used in transformer-coupled stages. Therefore, check all tubes.

(8) Impedance-Coupled Amplifiers. The circuit arrangements of these are identical to those of resistance-coupled amplifiers, choke coils being used instead of resistors. This makes possible the use of lower plate voltages, as we do not have the excessive voltage drop inevitable with resistors. Combinations of chokes and resistors are also

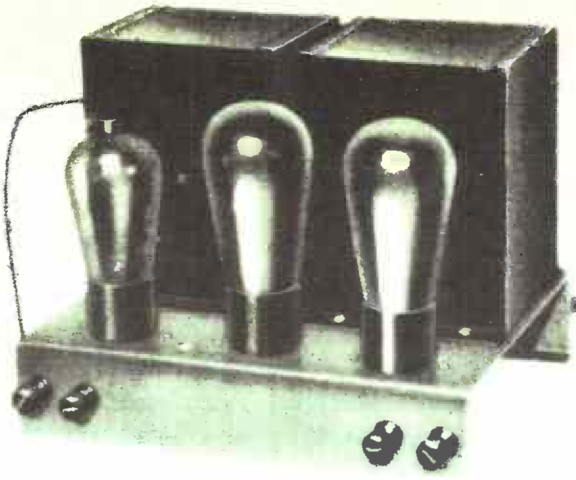

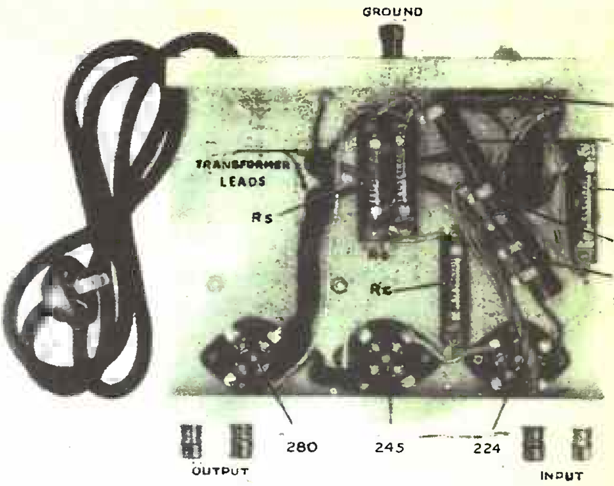

Fig. 89 - The Electrad-Loftin White direct-coupled amplifier.
Fig. 90 - (right) Shows the wiring on the bottom of the instrument.

possible, such as a plate resistor and grid-leak choke, or vice-versa. In either case, a coupling or blocking condenser is required. Tapped chokes or impedances are sometimes used, giving the device an auto-transformer action. Testing impedance-coupled amplifiers will not be considered separately, as it involves only testing the coils and condensers in a manner similar to that described in connection with transformers.

(9) Direct-Coupled Amplifiers. The elimination of the coupling or blocking condenser in a resistance-coupled amplifier gives us what is called a direct-coupled amplifier, but certain precautions must be taken before this can be effected. Some means must be employed to maintain the grid-bias voltages at the proper values. This has been well accomplished in a practical manner in the Loftin-White amplifier, the circuit of which is given in Fig. 91.

This circuit was designed specifically for use as a phone amplifier, the phonograph pick-up being connected directly to the input terminals. However, with the addition of a suitable coupling device many interesting combinations of this system with various R.F. tuners can be obtained. A simple receiver can be constructed by coupling the input terminals to an antenna and ground through a conventional tuning coil and condenser. In the diagram of Fig. 91, P is a 200 ohm potentiometer; R1 a tapped divider resistance; R5, 25000 ohm metallic resistor; R3, 50,000 ohm metallic resistor; R6, 100,000 ohm metallic resistor; RC, 500,000 ohm resistor; the tubes used are a type '80 rectifier, a '45 amplifier, and a '24 screen grid tube for the first stage. The resistances and connections are such that the correct bias voltages are obtained only when using the correct tubes.

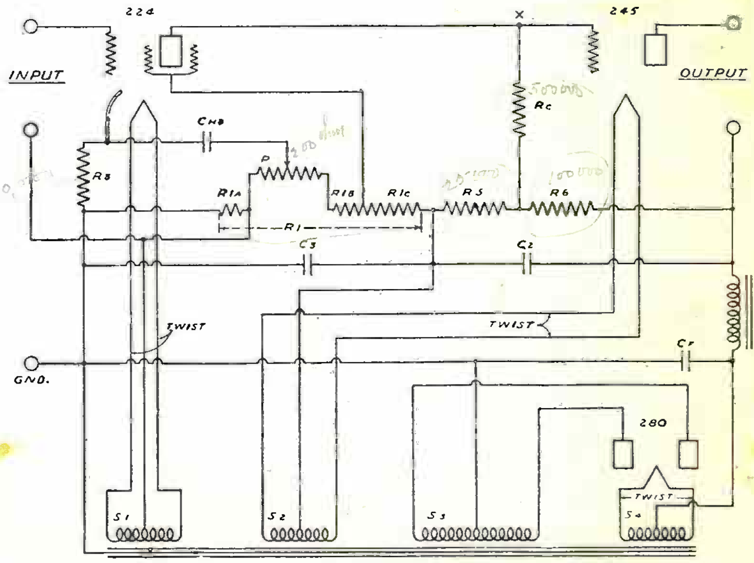

Fig.91 - Diagram of direct-coupled amplifier.

(10) General Audio Troubles. Oscillation, resulting in a high-pitched squeal, is

prevalent in many poor audio amplifiers, especially transformer-coupled ones. Sometimes placing the fingers across the secondary terminals of the first- or second-stage transformer will eliminate this, showing that a high resistor of from 10,000 to 50,000 ohms will do the same thing. This reduces volume, however, and should not be resorted to unless absolutely necessary. A condenser of about .0005-mf. capacity will also be a relief; but this method is likely to absorb high notes and produce distortion and a muffled tone. By-passing the plate-supply power leads or "B" batteries will also help. A condenser across the first primary, or an equivalent filter system in the detector plate circuit, is essential. For resistance-coupled amplifiers, a supply of resistors should be on hand, so that these can be interchanged.

(11) Audio Amplifier Comparisons. Transformer-coupled amplifiers have limited frequency characteristics; that is, they do not respond equally to all musical frequencies, especially at the extreme high and low ends of the scale, where they are less efficient than in the middle. Also, the magnetic qualities of the core distort the wave shape, introducing foreign frequencies into the tone. But modern transformers are good enough for all ordinary requirements, and are very reliable and practical. Resistance-coupled amplifiers have possibilities of giving extremely wide undistorted frequency-characteristics, resulting in better quality; but, generally speaking, they are less reliable and practical than transformer-coupled amplifiers. Impedance coupling may be placed somewhere between the two in merit. Therefore, in sets employing two or more resistance stages, it is sometimes advisable to substitute a transformer of modern make for one of the resistance stages. This will give more constant, reliable, dependable, practical, operation; with ultimate satisfaction on the part of the set owner. In making the change, it is usually necessary to change to the proper tube, and plate voltage, for transformer operation.

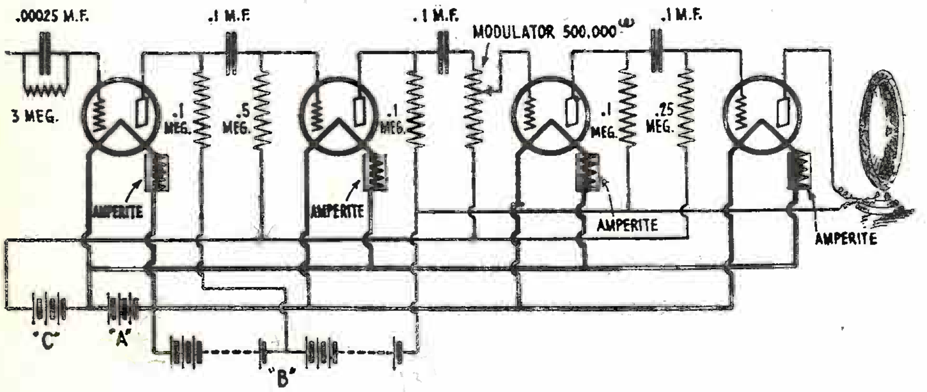

Fig. 92. - A typical resistance-capacity coupled amplifier is shown above. In amplifiers of this type absolute constant operating conditions are necessary. Changes in voltages or resistance values impair the quality and destroy the amplification factor. At the right are shown resistors of small size and high capacity suitable for circuits of this type. The illustrations are full size. The upper one has a rating of two watts and the lower one ½ watt. They are furnished in various resistance values. Illustrations courtesy International Resistance Co. As regards constancy in voltage control, Amperites, (automatic voltage controls) are indicated in the filament circuits of the various tubes. The illustration at the lower left shows a full size amperite. As the current which passes through it increases, the resistance wire in it becomes heated and its resistance increases -- thus tending to reduce the current or hold it at a constant value. Devices of this kind are also furnished to maintain a constant input voltage for electric sets.

CHAPTER X

EXTRANEOUS NOISES AND THEIR ORIGIN

COMMONLY known as "interference," we may classify everything that comes under the above heading as sounds coming from the speaker that interfere with the program we desire to hear. This covers a broad field. However, we can group these pests into those originating outside the receiver, and those originating within the receiver. When the customer says, "My set is noisy; come and fix it," only the experienced Service Man knows the full significance of that simple sentence. His first procedure is to turn on the set and listen to the noise; if his ears have been trained by long experience, he knows exactly where to find the origin of the noise. Knowing the source, however, does not solve the problem. The difficulty lies in eliminating the noise; and this difficulty has prevented the sale of many electric sets.

(2) External sounds. Suppose we let this cover all sounds originating from electrical disturbances external to the set. We can tell whether the set or lighting line is noisy by disconnecting the aerial; if everything is quiet, we know that the interference comes through the aerial. If the aerial is examined and tested and found to be in good shape, we know that the interference is received in the form of radio waves originating at some external place. We can classify this form of interference into:

(a) Interference caused by broadcast stations,
(b) Interference from some oscillating receiving set,
(c) "Man made" static,
(d) Natural static.

Of the four types, "d" is probably the most annoying from the Service Man's viewpoint.

(3) Interference from Broadcast Stations. This form of interference in one case manifests itself in actual reception of the program of the interfering station, in which case the trouble is in the receiving set. It tunes too broadly and should be corrected, as described in Chapters VI and VII. In the other case, this interference manifests itself in a continuous squeal, due to the heterodyne effect of the interfering waves. Sometimes the squeal, is "scrambled" by the audio program, giving rise to a very peculiar mess of squealing sounds; in this case the trouble is caused by the transmitting station, which is not using its allocated wave. This is more noticeable among the low wave length stations. Since the Service Man's field of action is limited to the receiving set, he can't correct troubles in the broadcast stations and the set owner will have to be content with what he gets until other corrective measures are taken.

(4) Interference from Oscillating Receiving Sets. A regenerative set in the state of oscillation will radiate waves, just like a broadcast station, though not so powerful. These waves heterodyne with those of the broadcast station being tuned in, setting up whistling and squealing sounds which run up beyond and down below the audible musical scale, creating disturbance in all other sets within a half-mile radius. One has a desire to

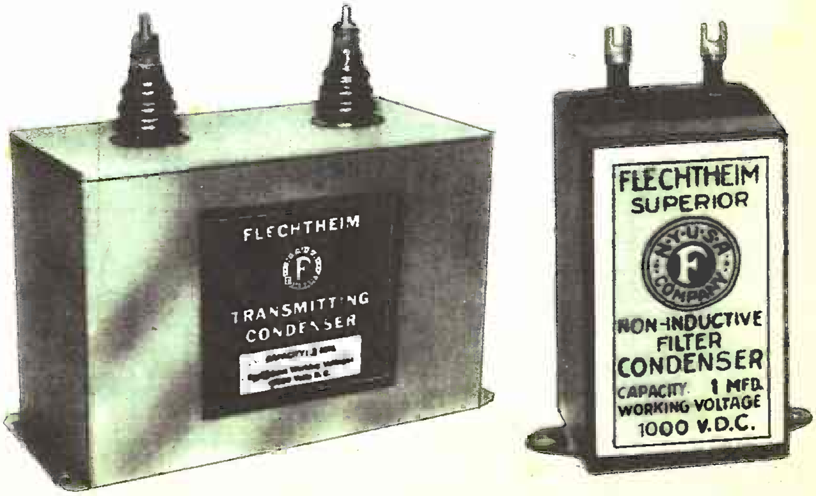

Fig. 96 - The Flechtheim condensers are ideal for filtering line noises.

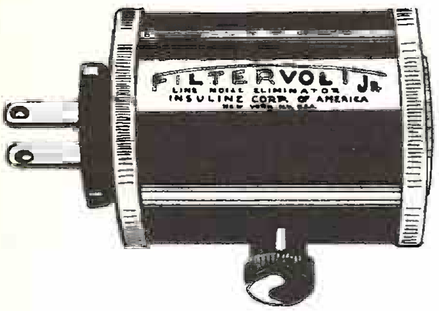

Fig. - 98. These line-noise eliminators connect between the set and the power supply Illustrations courtesy of The Insuline Corporation.

clip the offender's aerial, if it can be located. Fortunately, this form of interference is not as common as it used to be, as few modern sets oscillate.

(5) "Man-Made" Static. This form of interference can usually be distinguished from natural static, in that it has a more orderly arrangment of disordered, cacophonous, annoying, noises. To tabulate the various forms of man-made static seems unnecessary. Just keep in mind that every electrical device, from the simple electric light up to electric railways and down to door bells - in fact, the whole gamut of electrical appliances - gives birth to disturbances that affect the sensitive receiving set. These disturbances travel over three routes, and we can explain all of them by describing the origin of the simple click heard in a radio set when a light is turned off.

(a) We have the low-frequency surge, or impulse, due to interrupting the current when the light is turned off. This upsets the equilibrium of the line voltage, giving rise to an impulse that finds its way into all sets connected to the line.

(b) There is the radio-frequency wave, generated by virtue of the electrostatic capacity and inductance of the line in the immediate vicinity of the circuit interruption where sparking occurs. This exists, though the sparking is ever so slight. This wave travels over the line in the form of "wired wireless"; finding its way into the input or radio-frequency amplifier side of all sets connected to the line.

(c) The radio-frequency wave, generated as described above, radiates from the light-circuit wires, as waves radiate from a broadcast aerial. These waves find their way into all sets in the vicinity, whether connected or disconnected from the line.

It is evident that any electrical device that interrupts the current causes interference, In addition, we have devices, such as arc lights and mercury-arc battery chargers, that give what we may call "continuous interruption" and produce very annoying noises. The nature of the noise may indicate the source. Low sputtering sounds like

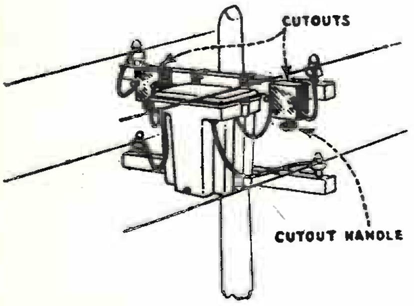

Fig. 93 - A common source of "static."

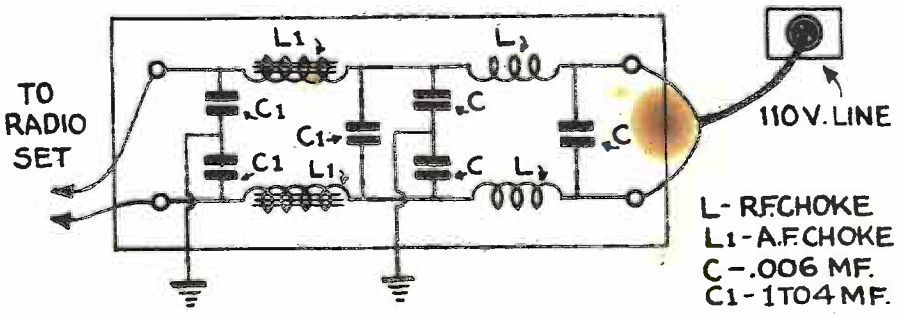

Fig. 94 - To completely filter line noises both audio and radio-frequency filters should be used.

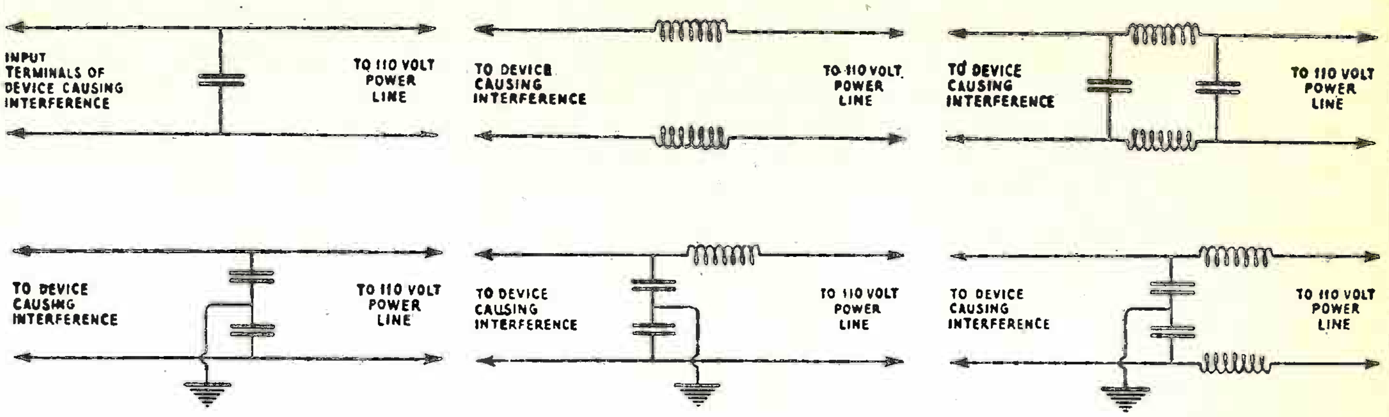

Fig. 95 - Various forms of filter arrangements. Both audio- and radio-frequency coils should be tried.

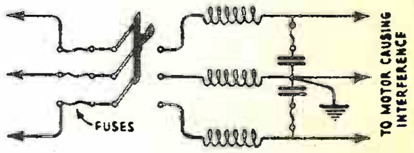

a rush order of bacon and eggs, indicate 60-cycle sparking, which may be due to a loose street lamp, or leakage in wet power lines, or loose transformer cutouts. See Fig. 93. Continuous clicking or buzzing may be due to ringing door bells or electric vibrators, or a radio station sending out code signals. Continuous semi-musical noises, that rise and fall in pitch, are caused by commutator-type motors that speed up and slow down, as in a trolley car. Short-wave sets seem to enjoy picking up the spark-plug noises from motor cars. "Super-Hets" have this habit also, as those who have operated them in motor boats know.

(6) Eliminating Man-Made Static. Various methods have been devised to eliminate man-made static; all use some form of filter system. For example, we can connect radio-frequency chokes in the line circuit supplying our set. As the name implies, these will choke out the radio-frequency currents existing in the line in the form of "wired-wireless." Then we can connect condensers across the line or between each side of the line and ground, to absorb radio-frequency currents. In addition, we must connect large iron-core chokes and large condensers in a similar fashion to the line to filter out all audio- or low-frequency impulses or surges. A complete filter of this type is illustrated in Fig. 94. Fig. 95 shows various types of filters. If the origin of the noise is definitely located, a filter should be connected there also, as indicated by the various illustrations of Fig. 97. This will block all three routes over which interference travels. Just a single 1-mf. condenser will help a lot.

A good grade of condenser should be used - one that will stand the terminal voltages of the machines being filtered. Fig. 96 shows two types, mainly employed in "B" supply systems, but suitable for filter systems also. Note that the larger one shown has a 2-mf. 5000 V. D.C. rating. The smaller one, measuring 1 1/8" square by 2" high, has a capacity of 1-mf. and will stand a working voltage of 1000 D.C. The unusually small size of this instrument explains why it is favored by many Service Men.

Various filter devices now on the market are available to the Service Man and will facilitate his work in this line. The "Filtervolt" line noise eliminators, two forms of which are shown in Fig. 98, can quickly be applied to any set.

(7) Locating Disturbances. A noisy street light, or other outside interference, may be located by the use of a simple portable regenerative set and a loop aerial. A good way is to ride around in a car with the set until the disturbance is found. The loop is directional, and will point to the direction of the disturbance. This is clearly illustrated in Fig. 99. The neighbors may think that you are looking for a lost radio program, but you will find that the search will be well worth the trouble.

(8) Natural Static. Natural static cannot as yet be eliminated or effectively reduced in any way, but the Service Man should recognize it, not to waste time trying to find trouble elsewhere when static exists. The most common source of static is the lightning discharge, and since there are some two hundred lightning discharges per minute taking place within the receiving area of a sensitive radio set, and more in the tropical regions, we hear a continuous grinding roar when we adjust our set to extreme sensitivity while tuning in a distant station. This is called "the noise level". If we could eliminate it, our receiving range would encircle the globe. Static, or "atmospherics," as it is also called, is more prevalent in the summer months, especially during local thunderstorms.

(9) Noises Originating Within the Set. The most likely sources of noise within the set are loose or poor connections in the circuit; such noise sounds for all the world like static. In addition, there are noises from microphonic tubes, weak batteries, oscillating circuits and mechanical vibration caused by the speaker or loose parts adjoining it or within its acoustical range. In the latter case there are instances when a picture on the opposite side of the room was set into vibration and chattered against the wall. Perhaps the best way to diagnose troubles from the resultant sound would be to list all the various sounds and give all the possible sources of trouble that could produce such sounds. The futility of doing this completely makes one hesitate to start. In the first place, we cannot spell all the various discordant sounds with the 26 letters available, and even if we could we couldn't pronounce them. In the second place, after investigating all the reasons given, the practical Service Man may find that the real trouble is due to a drop of solder spilled into the set by some previous Service Man - a condition that we could not possibly predict in advance. If one understands the function of each part in the set, as well as the electrical coordination of the whole ensemble, he can make a complete test of the set in the time it takes to read a printed diagnosis. Therefore, we will limit the following to the most outstanding symptoms.

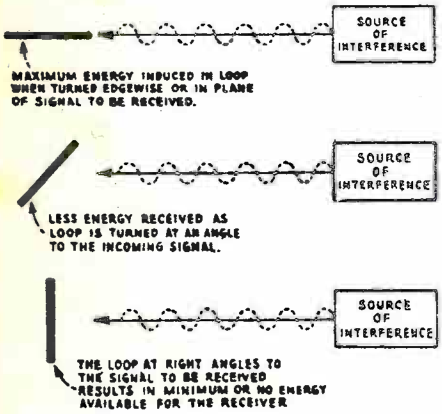

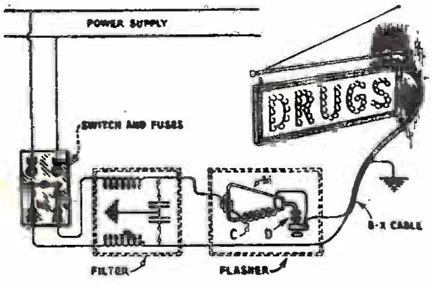

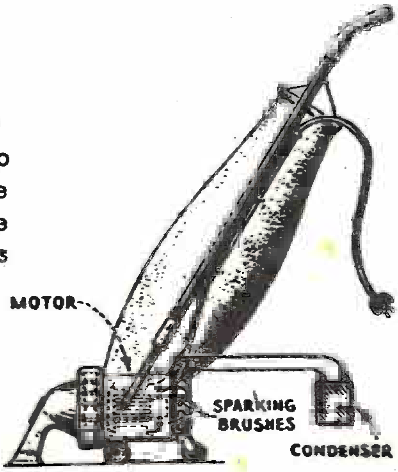

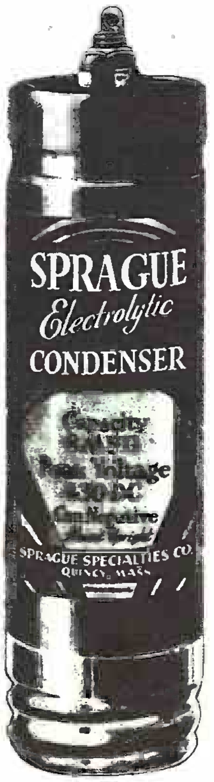

Fig. 99 - above. Showing how a loop aerial is employed to locate the source of man made static. The greatest response is heard when the loop points in the direction of the interference, as shown in the upper illustration. The illustrations at the right show common sources of trouble, and how they were subdued by means of condenser type of filter circuits. Sign flashers, as shown above, always produce noises. Worn out or old commutator type motors, are also noisy.

Fig. 100 - above. This illustration shows an electrolytic condenser. Its small size and large capacity make it ideal for all kinds of filters.

(10) Dead set, no sound at all. No tube noise when jarring set, or background static hiss.	Probably due to a broken circuit or poor tubes. Examine the aerial circuit, battery or power connections and loud speaker.
(11) Low volume.	If the volume gradually decreases when the set is turned on, examine the batteries and tubes. If the volume is unsteady, test the line-voltage . Examine the aerial for swaying and "leaks" in wet weather.
(12) Poor selectivity.	Note the set's location with respect to local stations. Try shorter aerial, wavetrap or rebalance set in the shop.
(13) Poor tone quality.	Check supply voltages. Look for trouble in the speaker, or wrong "C" - bias voltages on the tubes. Examine grid leak on detector.
(14) Sharp cracking sounds.	Probably static, or outside line interference. If followed by set going dead, look for loose connection. Examine all soldered joints.
(15) Squeals and howls.	If not very loud, probably due to neighboring set. If very loud and varying in pitch while tuning, due to oscillations in set. Test by-pass condensers and adjust trimming and neutralizing condensers. Examine by-pass condensers on audio transformers.
(16) Gradually increasing ringing sounds.	Due to microphonic tube - probably in detector socket. Try new tube or howl arrester.
(17) Intermittent squeaks, like sound of wagon wheel or cold, squeaky snow.	In battery set, look for run-down storage battery or corroded connections.
(18) A.C. Hum.	On A.C. sets, try reversing line plug. Try connecting one side of line to set chassis through a 2- to 4-mf. condenser. Examine rectifier supplying dynamic field current. Examine filter system and A.C. wiring or leads near set. Test "C" bias resistors and voltage divider. On D.C. sets, lock for open grid circuit.
(19) Fading.	This may be due to a natural atmospheric condition or poor aerial installation, or nearness to some other receiving set. Check line voltage for variations.
(20) Rattling sounds.	Probably mechanical vibrations. Tighten all parts near speaker and cabinet. Examine speaker and re-center voice coil if necessary.

(21) Fuses "blow" when turning on set. - Examine filter condensers on A.C. input and in power supply. Test rectifiers supplying dynamic field current.

(22) In describing sounds indicating radio interference, we cannot improve on those given in "Filterette," a booklet published by the Tobe Deutschmann Corporation.

(23) Whirring, crackling, buzzing, humming, droning, whining. - Indicate interference caused by electric motor; sometimes, when the motor starts and stops, the sound will start low and rise in pitch until the motor reaches full speed; when the whine will remain at a steady pitch, usually rather high. Especially true of commutator motors.

(24) Rattles, Buzzes, Machine-gun fire. - Sounds of this sort generally indicate interference caused by telephone dialing, buzzers, or door bells. It is not generally steady, but stops and starts.

(25) Violent heavy buzzing or rushing sound. - Sounds of this sort generally indicate interference caused by high-frequency apparatus. Such noises will usually be heard over a large area, a whole town, even; and often are so loud that they drown out the radio program completely.

(26) Crackling, sputtering, snapping, short buzzes or scraping. - Sounds of this sort generally indicate interference which is being caused by one or more loose connections in the set, or electrical wiring in the vicinity. Sometimes the sounds are especially noticeable when the room is jarred or shaken by footsteps, street cars or traffic.

(27) Clicking. - Sounds of this sort generally indicate interference which is being caused by some sort of make-and-break connection, such as a thermostat; especially if it comes at fairly steady intervals.

(28) Heavy violent, buzzing, usually short. - Sounds of this sort generally indicate radio interference which is being caused by arcing of a spark across a gap. This may occur as a short noise or a steady one.

(29) Steady humming. - Sounds of this sort generally indicate interference which is being caused by improperly filtered alternating current. Such humming is often a fault of your set or eliminator. Look for dynamic speakers improperly filtered; faulty construction of set or eliminator; filter condensers blown or shorted; ground on set poor; improper wiring;poor tubes; wiring parallel with power line.

CHAPTER XI

RADIO-PHONOGRAPH COMBINATIONS, SHORT-WAVE SETS, AUTOMOTIVE INSTALLATIONS.

RADIO-Phonograph Combinations. Many radio sets have phonograph combinations, and the Service Man is often called to make repairs on them. These phonograph combinations employ some kind of electromagnetic pickup device, consisting of parts similar to those in a magnetic speaker unit, except that the armature has an attachment for a phonograph needle. This rides in the groove of the record, causing the armature to vibrate, thereby inducing corresponding electrical vibrations in a coil surrounding the armature. The armature, of course, is mounted between the poles of a small permanent magnet. All that remains to do is to amplify these currents induced in the armature coil; various methods are employed. Part or all of the audio-frequency amplifier of the radio set is used to amplify these currents, the sound being reproduced by the regular loud speaker. The phonograph attachment is usually connected to the set by a plug connection; a switch on the set connects either radio or phonograph to the amplifier.

(2) Phono-Pickup Circuits. Connections of the phono-pickup circuits are included in the regular diagrams in the back of this book on the sets employing phonograph combinations. But a few words describing some of the circuits may not be amiss here. Fig. 102 shows a typical method as employed in the Stromberg Carlson "No. 654" A.C. receiver. In this set the phonograph motor is operated by the A.C. line and drives the turntable at a rate of 78 revolutions per minute; the output of the magnetic pickup is connected to a potentiometer volume control which, in turn, connects to the input transformer as shown. The secondary of the input transformer is led by means of a plug connection to the set, to the grid and filament of the detector tube, thus employing the detector as a stage of audio-frequency amplification. Arrangement for obtaining the proper "C" bias on the detector is included. In many other sets, the pickup connects to the primary winding of the first audio-frequency transformer, as shown in the diagrams of the Brunswick-Balke-Collender sets.

(3) Phonograph Motors. Special electric motors are employed for driving the turntable. In the Sonora sets a slow-speed series-wound commutator type is used; the motor armature revolves at the same speed as the turntable. A centrifugal-ball governor and brake disc maintain constant speed. It is operated by the 110V. 60-cycle line. Noises which the motor might produce in the radio set are filtered out as shown in the diagram of Fig. 103. Other types of motors run at high speed and have gear-reducing devices.

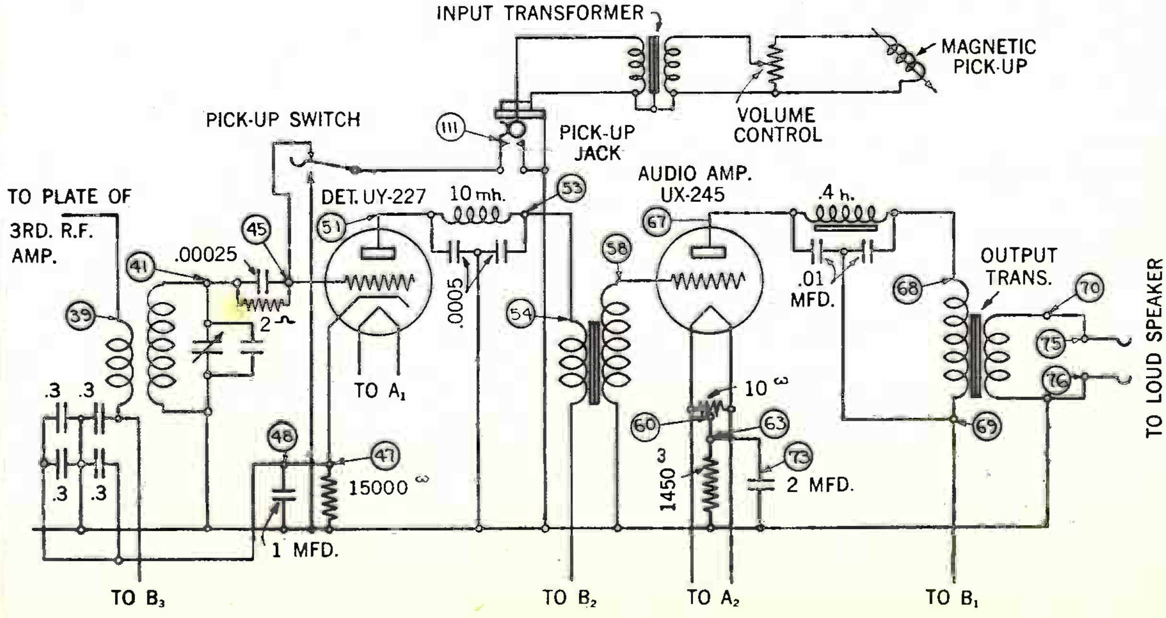

Fig. 102 - Typical circuit of a phonograph pick-up. The pick-up is shown at the upper part of the drawing. It feeds into the detector grid circuit.

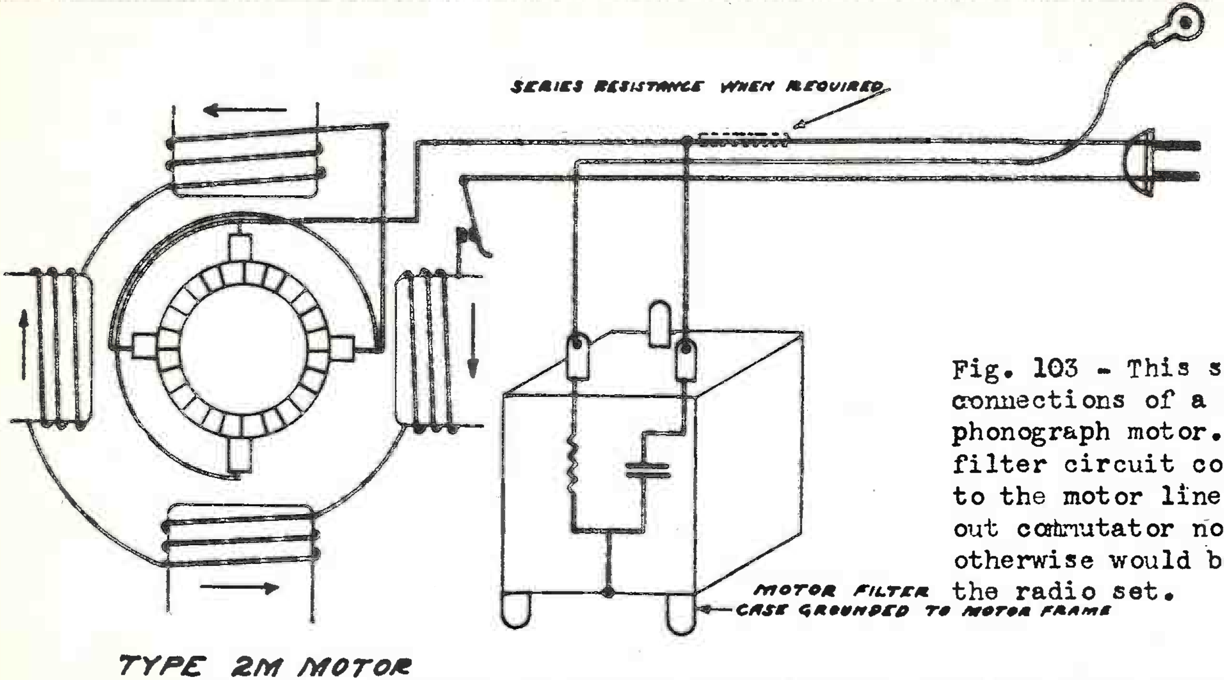

Fig. 103 - This shows the connections of a slow speed phonograph motor. Note the filter circuit connected to the motor line to filter out commutator noises which otherwise would be heard in the radio set.

(4) Automatic Stops. Arrangements are provided to automatically stop the phonograph motors at the end of the record, by an arm projecting underneath the motor board carried by the pickup arm. This arm opens the motor circuit, at the same time applying a brake, so that the motor stops within 8 to 10 revolutions.

(5) Troubles in Radio Phonograph Combinations. One of the simplest tests of a "dead" radio is to try the phonograph combination. If this works, it shows that the audio-frequency amplifier and speaker are in good condition, and that the trouble is in the radio-frequency amplifier or aerial system. So far as electrical trouble is concerned, in the pickup device, this can easily be tested by a continuity test, as well as all the associated parts. Mechanically, the pickup should be examined and the armature adjusted and cleaned if necessary. Loose parts and dirt will cause rattles. If it is "dead," examine the plug connections to the set. Test the volume control for opens and noise, and clean if necessary. Use new steel needles only for each rendition, or Tungstone needles.

(6) Motor Troubles. The speed should be measured and adjusted by timing with a watch. The turntable should turn 39 times in 30 seconds. In case of a stalled motor, test all the electrical circuits for continuity, and also remove the turntable and try turning the shaft with the fingers to see if it binds; this test is applicable to slow speed motors that run at the same speed as the turntable. Low torque may be due to a shorted portion of some of the motor windings, or binding in the mechanical system. Examine the governor. Shorted windings also cause a loud A.C. hum and commutator sparking. Open windings also cause excessive commutator sparking. Clean the commutator with fine carborundum paper. Fluctuations in speed are probably due to the governor, or to an open or loose connection, which should be corrected. Oil all parts indicated, with a good grade of sewing-machine oil. In cases of real difficulty, it is best to take the complete phonograph equipment to the shop for a thorough overhauling, taking care to follow the explicit instructions given by the manufacturer of the apparatus.

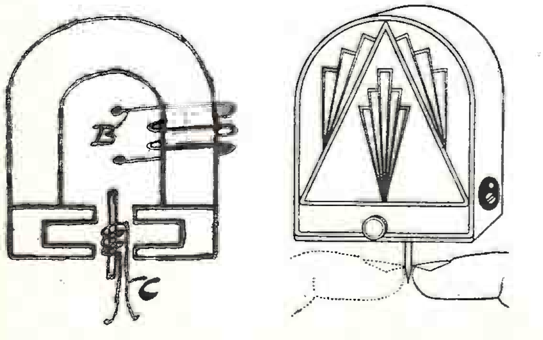

Fig. 101 - At the left is shown the magnetic and electric circuits of the Audak "tuned" phonograph pick-up. The right illustration shows the pick-up being tested for magnetic balance by tapping the needle with the finger. It can be balanced centrally by means of the thumb screw adjustment. An unbalanced condition means distorted reproduction.

SHORT-WAVE RECEIVERS.

The same general methods of testing broadcast receivers apply to short-wave receivers. There are outstanding differences in design, however, which we will briefly point out. In the first place, the short-wave receiver employs plug-in coils, so that the entire range may be covered; secondly, regeneration is used, the station usually being tuned in by the heterodyne whistle, after which the set is left on the verge of oscillating, for phone reception. Regeneration is controlled by a rotating tickler coil, a variable condenser, or a variable high resistor. A typical short-wave circuit of wide popularity is that of the Pilot "Super Wasp," illustrated in Fig. 104. This is an A.C. receiver, which required special design, as will be pointed out later. The battery-type short-wave set is more common and of simpler design. The Service Man cannot account for or explain all the vagaries of short-wave reception, but he can test the set and see that it is in working order, and trust to the elements whether Holland, Australia, or the next-door neighbor is tuned in.

(2) Troubles in Short-Wave Sets. In addition to many of the troubles encountered in broadcast sets, the short-wave set has troubles all its own. Perhaps the most common complaint is due to fading of the signals; this, however, is due to external agencies beyond the control of the Service Man. The reflection and refraction of waves by the Heaviside layer some 60 to 200 miles above the earth (depending upon the time of day) influences short waves of different frequencies differently. The waves "skip" around the earth and are apt to be heard at any place on the globe. Foreign stations roar in at certain times and locals fade away. All we can suggest is the use of three or four aerials of different lengths and locations, and switching arrangements whereby any one, or any combination, can quickly be connected for operation.

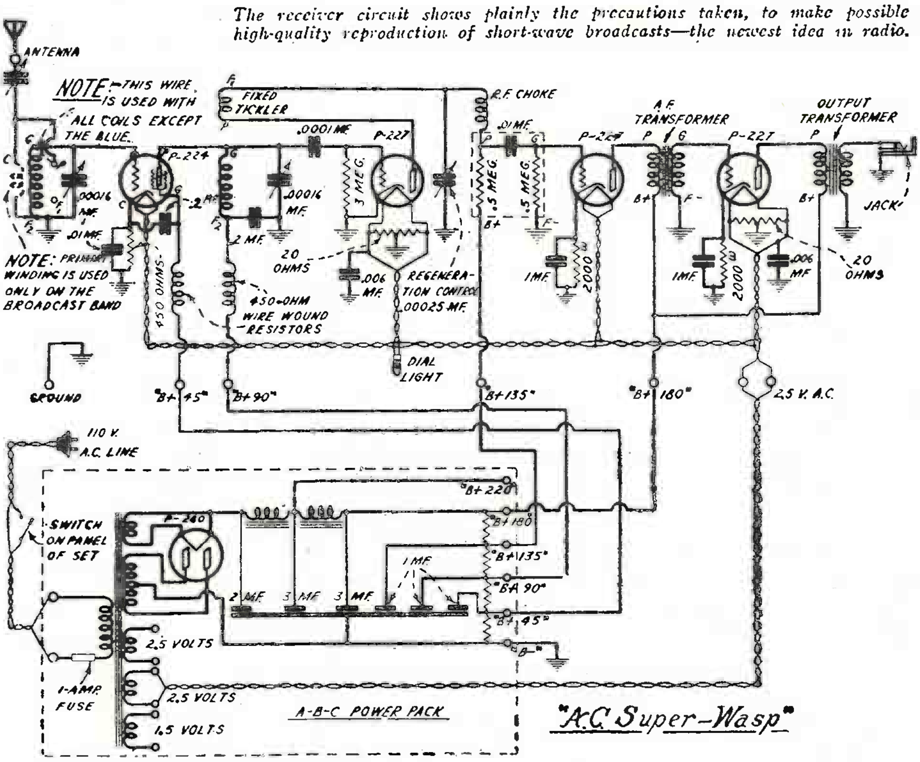

The receiver circuit shows plainly the precautions taken, to make possible high-quality reproduction of short-wave broadcasts—the newest idea in radio.

Fig. 104 - The Pilot A.C. Super Wasp.

(3) A.C.Hum. In the short-wave A.C. set shown in Fig. 104, hum was successfully eliminated by special methods. Two classes of hum were encountered; one existed with the tuning dials at any position; the other seemed to be "tuned in," like a radio station. The former was found to be due to the tube construction; the A.C. magnetic field about the filament reacted on the electron flow and hence the plate current, causing it to vibrate in unison. A special Pilot type '27 tube was subsequently developed, in which the heater filament doubled back on itself, like a hairpin, thus neutralizing its own magnetic field and eliminating this source of hum. The second type of hum was very prominent in regions between 14 and 50 meters and was found to be caused by parasitic oscillations existing in the heater-cathode combination and center-tapped resistor across the filament of the detector. These were modulated by the 60-cycle filament current, producing the hum. A .006-mf. condenser, connected across one side of this resistor, as shown, wiped them out and eliminated the hum. Other forms of troubles are similar to those in broadcast sets and need not be repeated again.

SERVICING AUTOMOTIVE RADIO

The popularity of this type of radio set makes a few words describing it necessary. While the set proper is similar to that of hundreds of other broadcast sets, certain precautions had to be taken in the design of it, to make it adaptable to the car. For example, the size of aerial and "counterpoise" (ground) is limited. The aerial must be small enough to be contained within the car; the ground is a counterpoise consisting of the metal framework of the car. With this small pick-up system, an extremely sensitive set is required. And a sensitive set of this nature is difficult to operate properly within a few feet of a noisy, sparky, high-tension, ignition system. Add to this the excessive mechanical vibrations acting on the tubes and connections and loosening them, and we have a vague idea of the troubles that had to be overcome to make automotive radio successful.

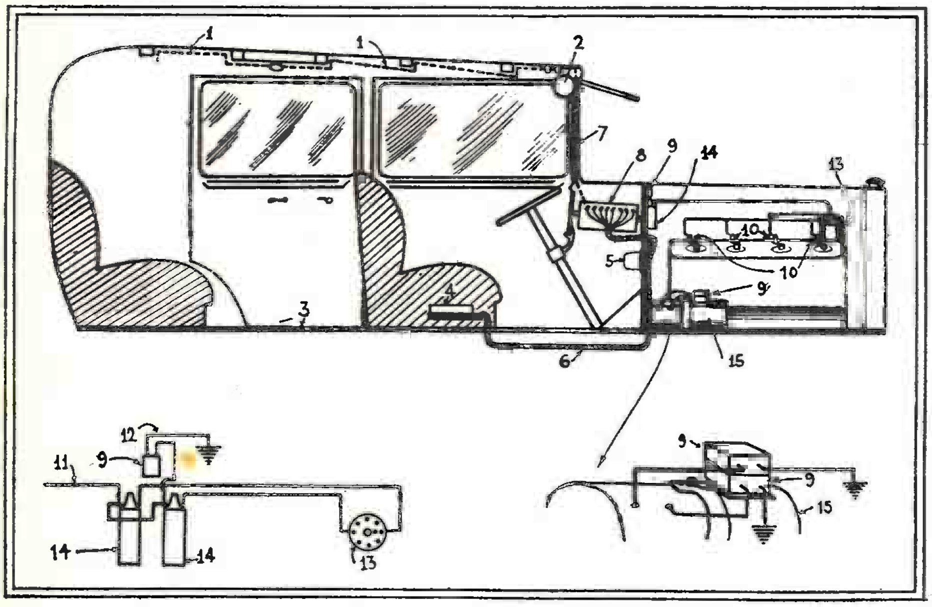

The "Transitone" installation: 1, aerial; 2, reproducer; 3, car floor; 5, output filter; 7, aerial lead; 9, interference filter condensers; 12, "ground"; 13, distributor; 14 ignition coil; 15, generator. See illustrations below.

Fig. 105 - A typical auto installation.

(2) Auto Installations. The various illustrations show typical examples of car installations. Fig.105 shows the general layout of the "Transitone" system; the set is installed under the instrument panel, the tubes being inverted. Flexible control shafts extend from the set to the control dials on the instrument board. The aerial consists of wire netting in the top of the car. The regular 6-volt car storage battery supplies the filaments, and the "B" batteries installed under the front seat supply the plate current. In limousines the magnetic reproducer is mounted above the windshield, and in open cars, below the instrument panel. The layout of the "Bosch" equipment is illustrated in Fig. 106. But the Service Man is more interested in the electrical problems than the mechanical layout.

(3) Interference Problems. A 25,000-ohm resistor is placed in series with each spark-plug lead to suppress high-frequency oscillations. See Fig. 107. A similar resistor is placed in the high-tension lead between the coil and the distributor. These have negligible effect on the action of the ignition system. In all types of ignition coils a certain amount of "kick-back" voltage is impressed on the primary winding by the high-tension side. This finds

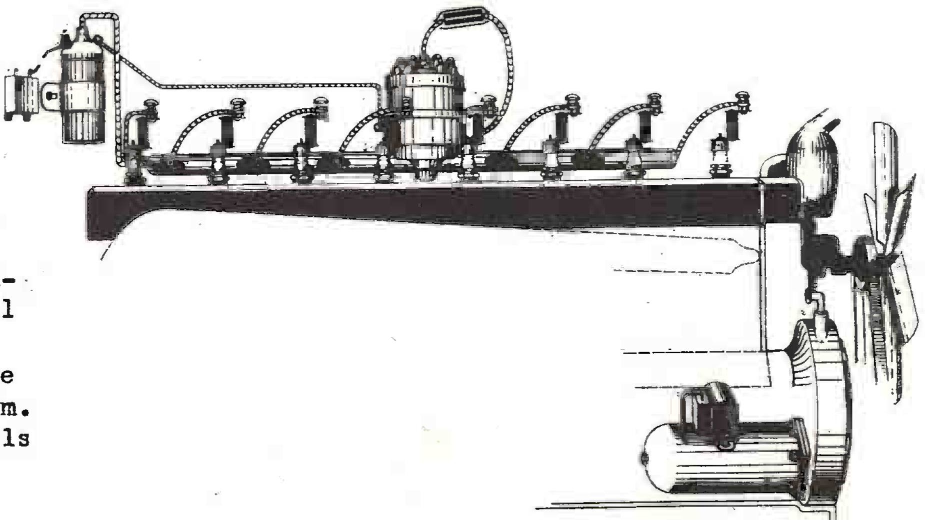

Fig. 107 - Resistors on spark plugs to reduce noise.

its way back to the storage battery and thence to the receiver, and is therefore filtered out by means of a 1-mf. condenser connected between the battery terminal of the coil and ground. If the ignition coil is mounted on the instrument board, it is necessary to shield the high-tension, and the leads going to the breaker points, at the point where they pass through the engine partition. Remember, in some cars the positive terminal of the storage battery is grounded, and in others, the negative side is grounded.

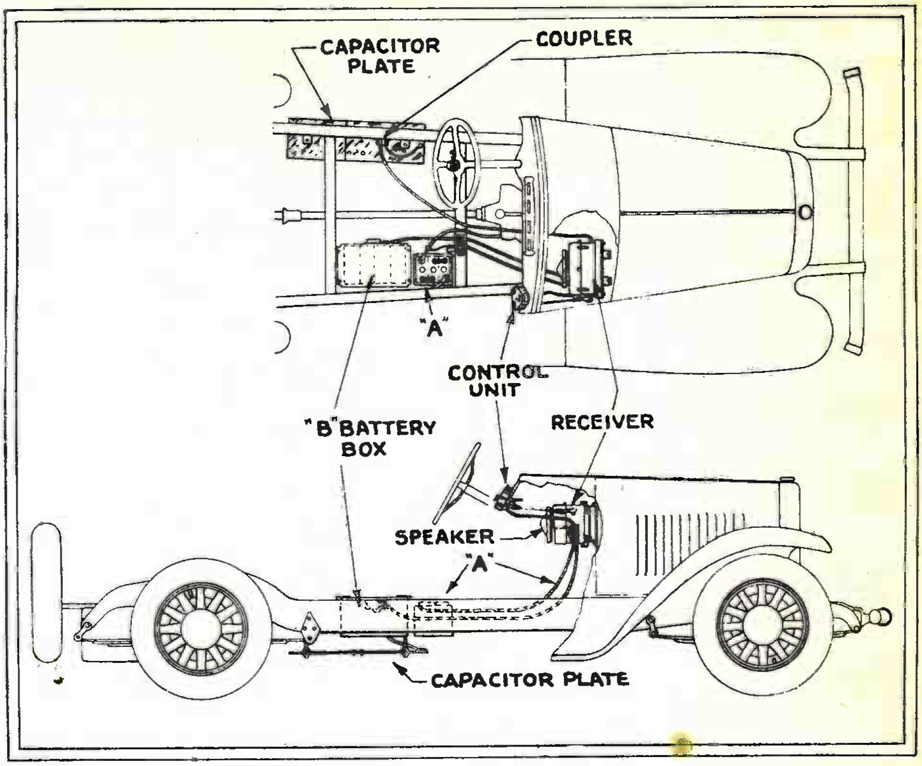

Fig. 106 - above. A typical auto installation. The battery connections are clearly shown.

(4) Type of Circuit. In the Transitone "Model TR106 set," a schematic diagram of which is shown in Fig. 108, three stages of tuned R.F. amplification are employed, using type '01A tubes, with grid-suppressor resistances to stabilize the circuit. Two tuning-control dials are used. A "soft" (type '00) detector tube is employed, and a two-stage audio-frequency amplifier; the last or output tube being a type '12A. Trouble shooting in the set, therefore, can be in accordance with the instructions outlined elsewhere in this book.

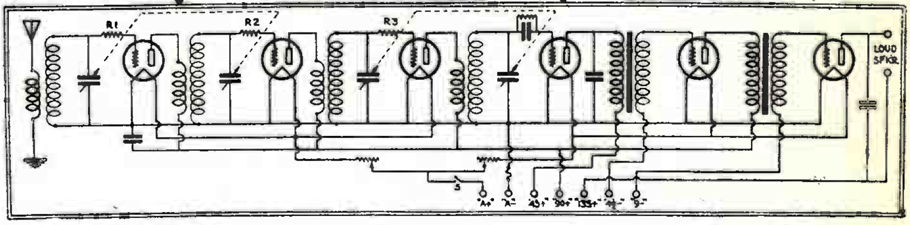

The schematic circuit of the receiver illustrated above The switch is S, the R.F. rheostat is a panel control for volume. The grid suppressors, R1-2-3, are 500, 3,000 and 100 ohms, respectively.

Fig. 108 - Diagram of the set shown in Fig. 106.

(5) Fig. 109 shows the schematic circuit of the "NR109" set developed by the Automobile Radio Corp. The receiver and detector is in one unit (NR107) and the audio amplifier in another unit (NR108). A single-control dial is used, and the volume-control knob is mounted on the center of the dial. The output tube is a type '71A. This set is used on all Chrysler cars which are radio equipped at the factory.

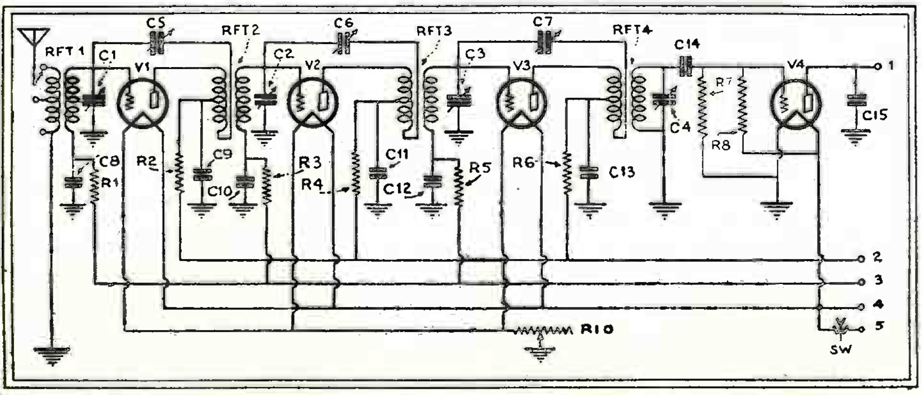

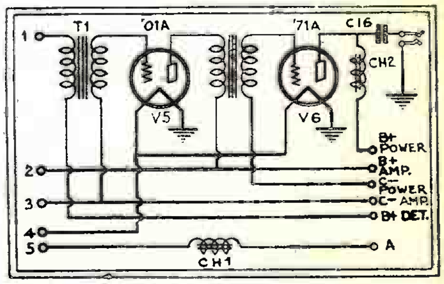

"Model NR. 107" tuning unit, left; "Model NR. 108" amplifier above. Either R7 or R8, or both, may be used. Observe resistance-capacity filters in grid and plate leads. Part values are not given.

Fig. 109 - This is a later type of circuit used in the auto installation. The circuit is neutralized and is thereby made more sensitive.

* STANDARD RADIO SYMBOLS *

In the various diagrams the parts of the sets which they represent are shown by means of symbols. While there is no standardized set of symbols in rigid use, they are somewhat similar. Therefore, in this list are given only the ones more in general use. Since the diagrams in nearly all cases are reproduced exactly as they appear in the service manuals furnished by the manufacturers, the publishers cannot be held responsible for any damage resulting from the use of the information contained in them.

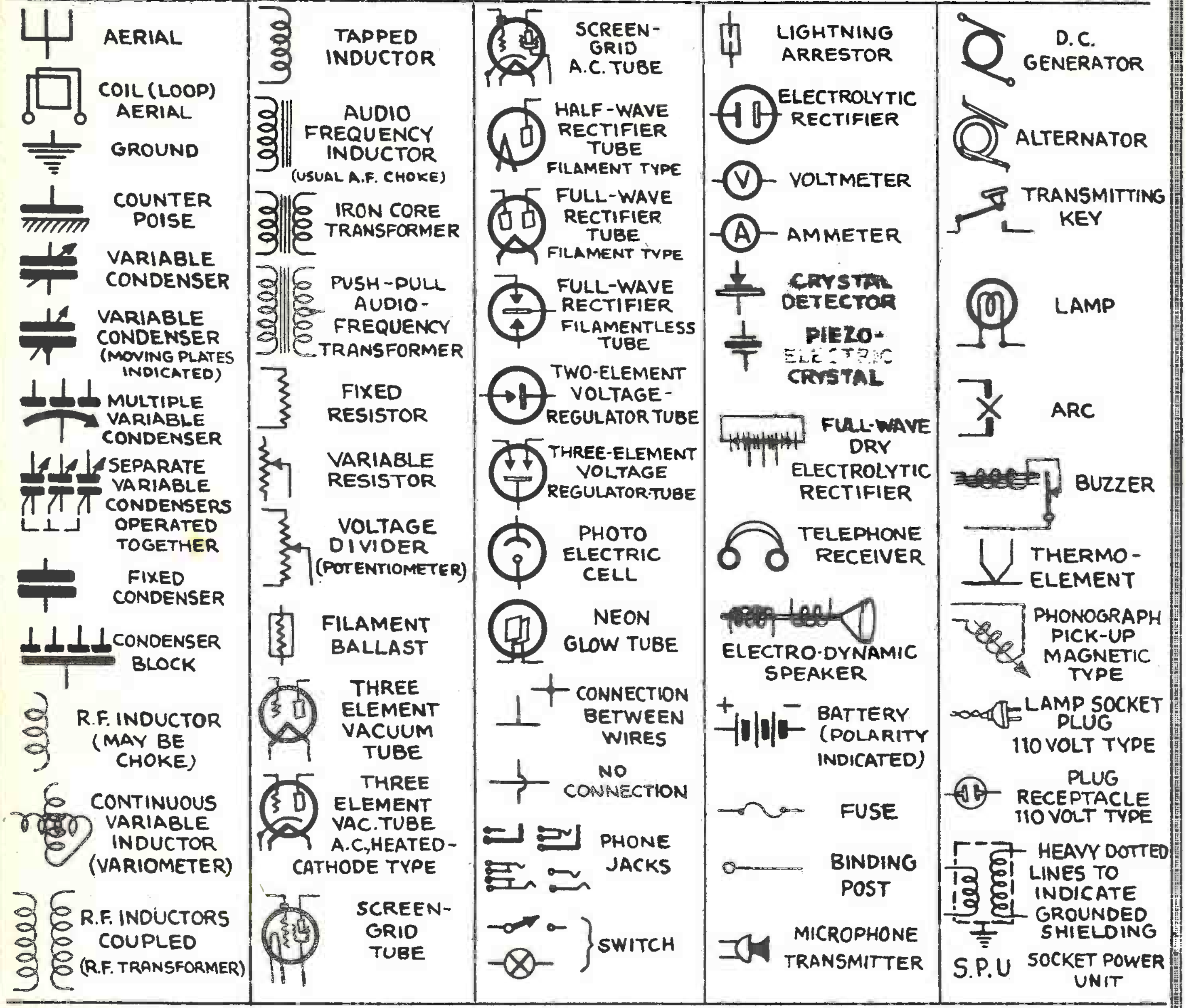

****

FORMULAS FOR DETERMINING RESISTANCE VALUES AND TYPES

Voltage in Volts	Current in MA	Resistance in Ohms	Power in Watts
KNOWN	KNOWN	$\frac{1000 \times \text{Volts}}{\text{MA}}$	$\frac{\text{Volts} \times \text{MA}}{1000}$
KNOWN	$\frac{1000 \times \text{Volts}}{\text{Ohms}}$	KNOWN	$\frac{\text{Volts} \times \text{Volts}}{\text{Ohms}}$
KNOWN	$\frac{1000 \times \text{Watts}}{\text{Volts}}$	$\frac{\text{Volts} \times \text{Volts}}{\text{Watts}}$	KNOWN
$\frac{\text{MA} \times \text{Ohms}}{1000}$	KNOWN	KNOWN	$\frac{\text{MA} \times \text{MA} \times \text{Ohms}}{1{,}000{,}000}$
$\frac{1000 \times \text{Watts}}{\text{MA}}$	KNOWN	$\frac{1{,}000{,}000 \times \text{Watts}}{\text{MA} \times \text{MA}}$	KNOWN
$\sqrt{\text{Ohms} \times \text{Watts}}$	$1000\sqrt{\frac{\text{Watts}}{\text{Ohms}}}$	KNOWN	KNOWN

These formulas are furnished by the INTERNATIONAL RESISTANCE CO. To use, find the horizontal line in which the two known values appear and the formula for either of the two remaining values will be found in the proper column. These equasions include correction factors where necessary so that the current values may be substituted in milliamperes

A.C. DAYTON CO.

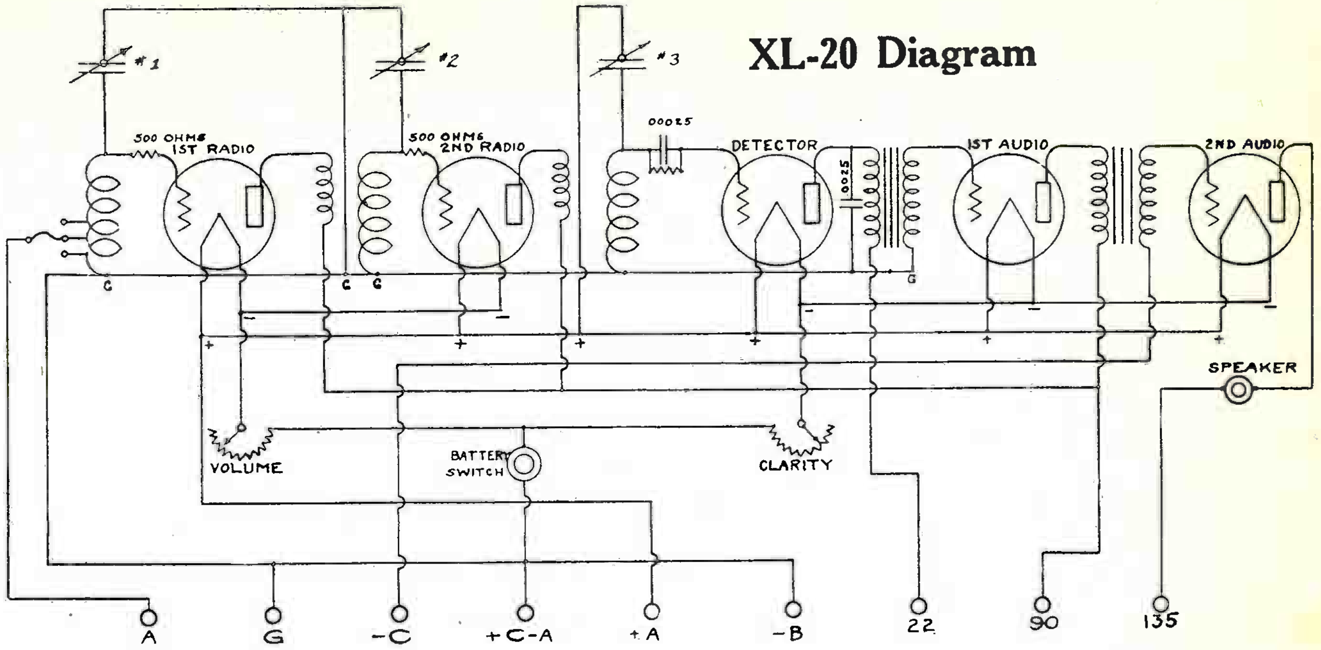

XL-20 Diagram

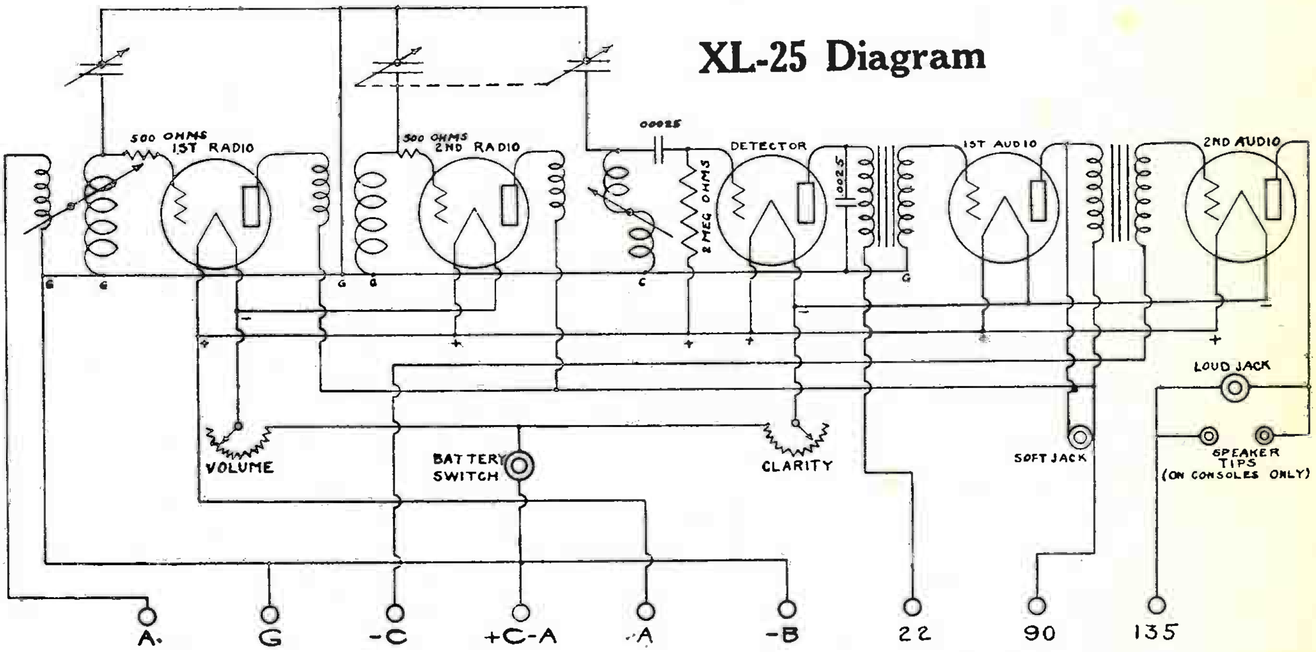

XL-25 Diagram

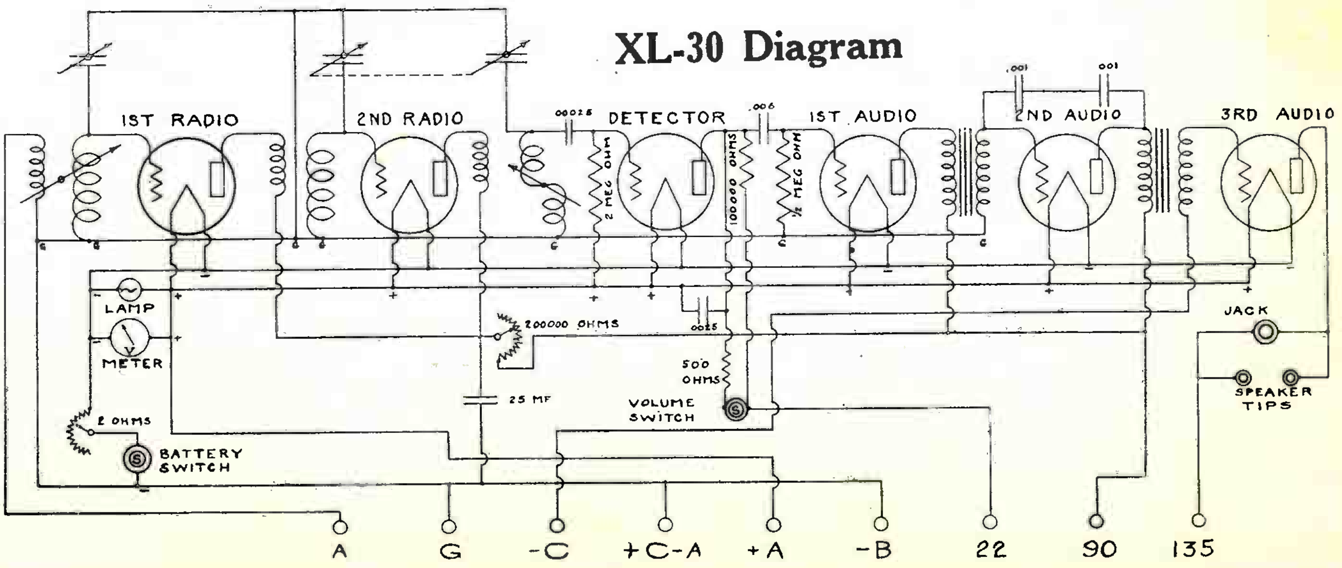

XL-30 Diagram

A.C. DAYTON CO.

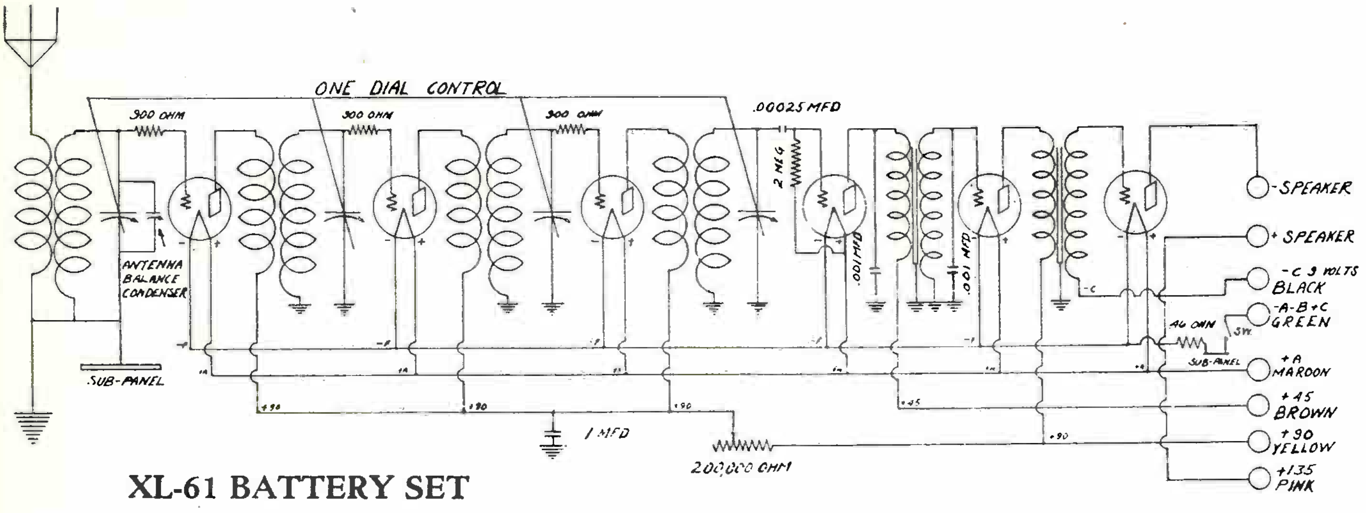

XL-61 BATTERY SET

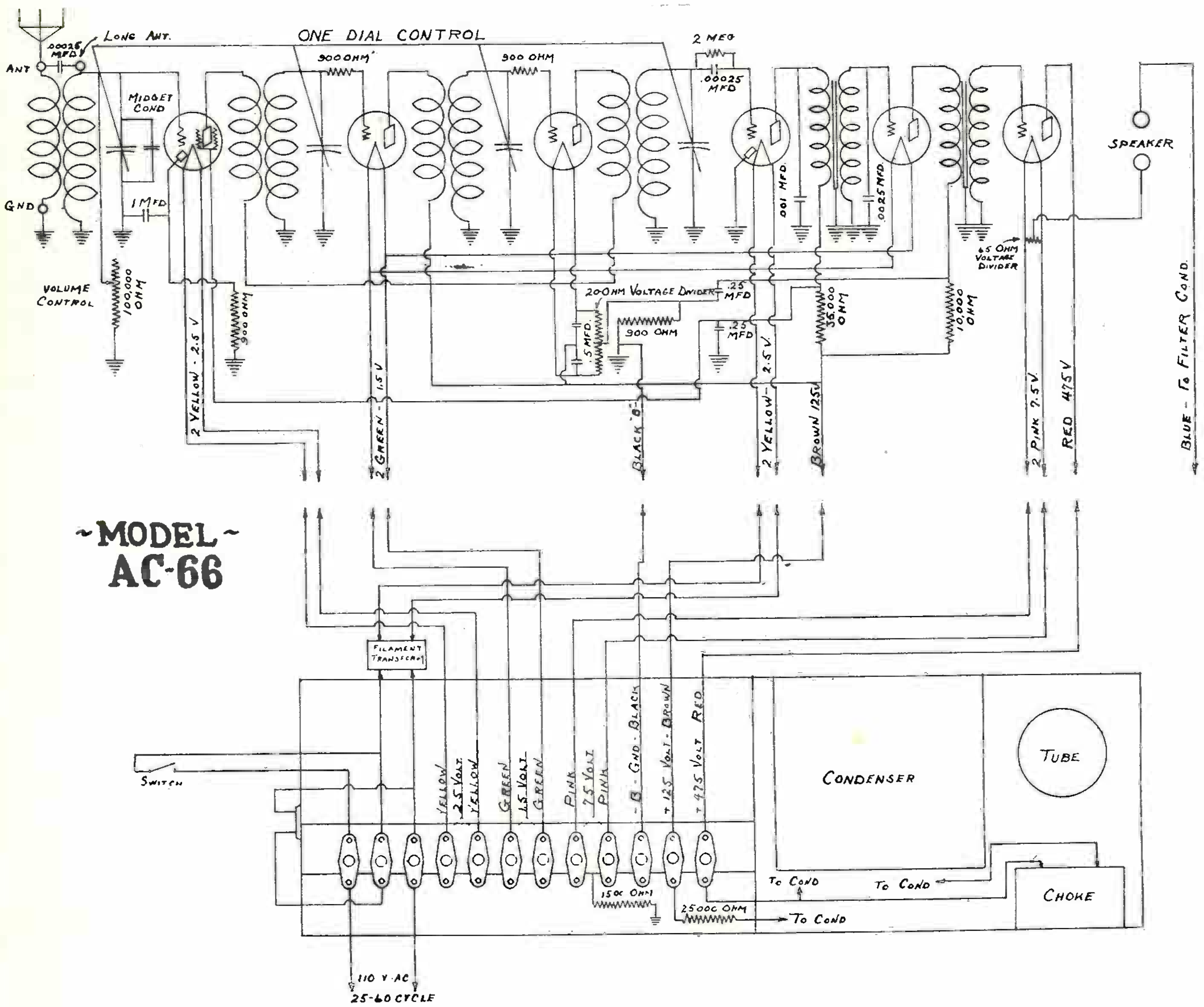

~MODEL~ AC-66

A.C. DAYTON CO.

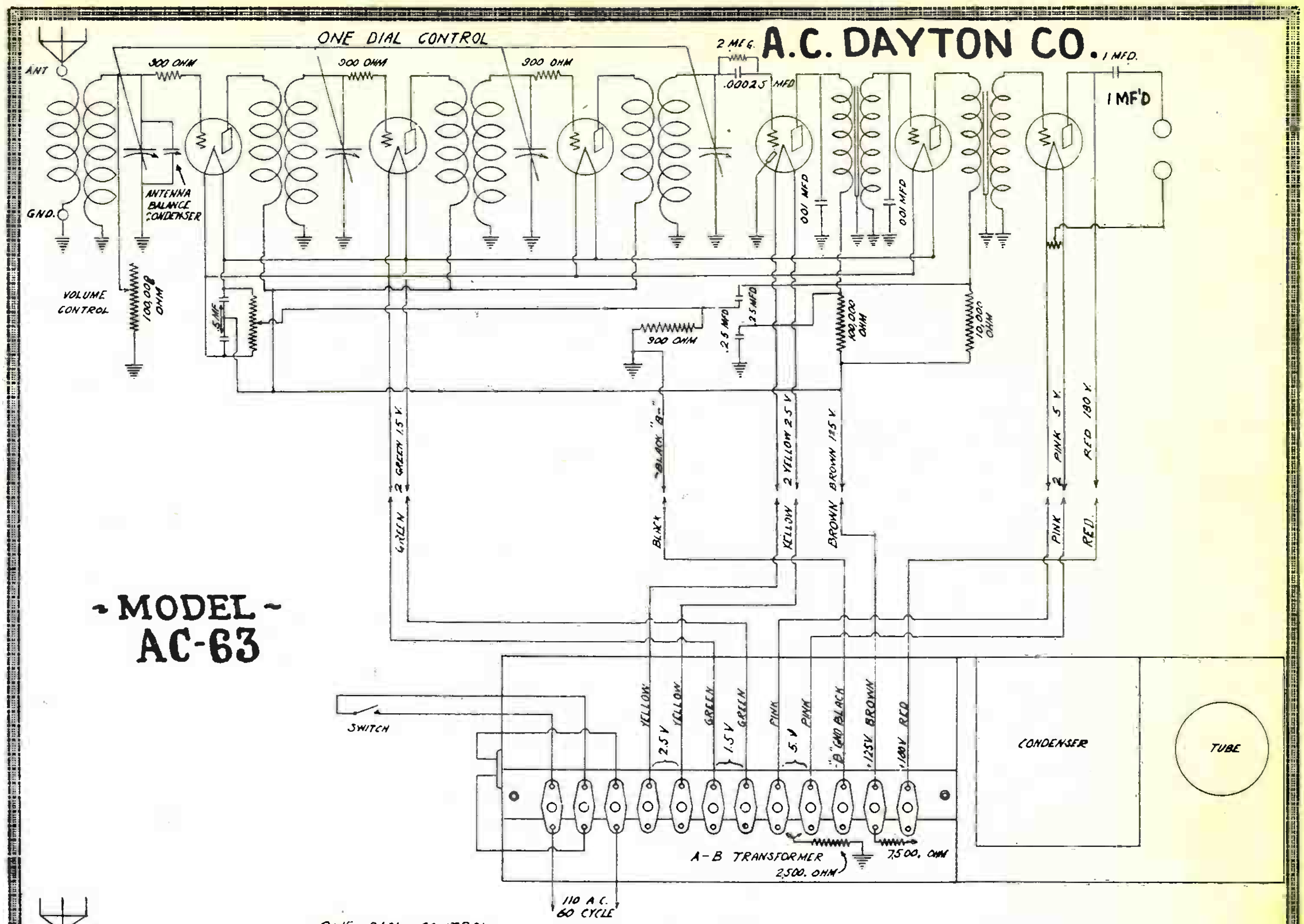

-MODEL-
AC-63

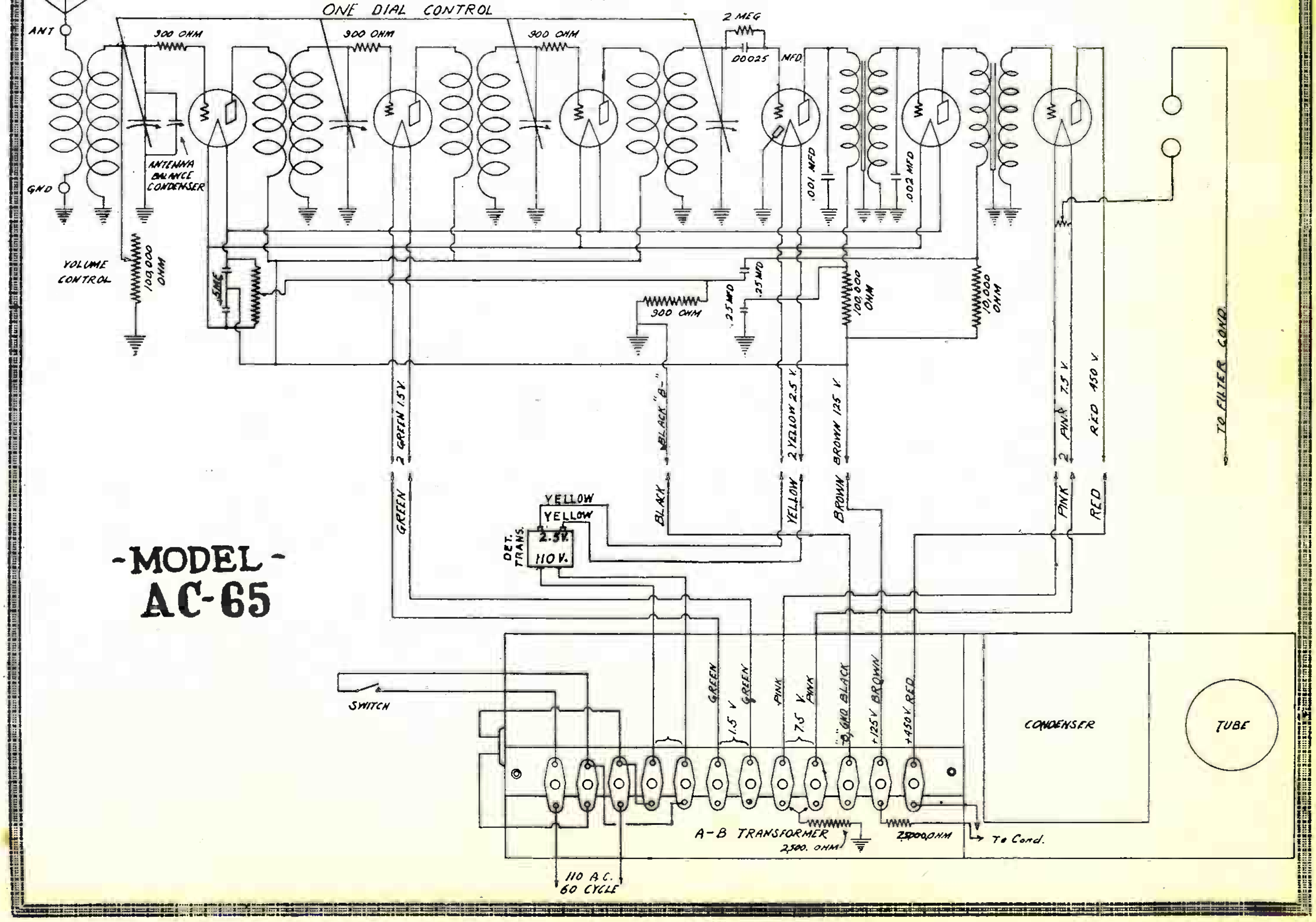

-MODEL-
AC-65

A.C. DAYTON CO.

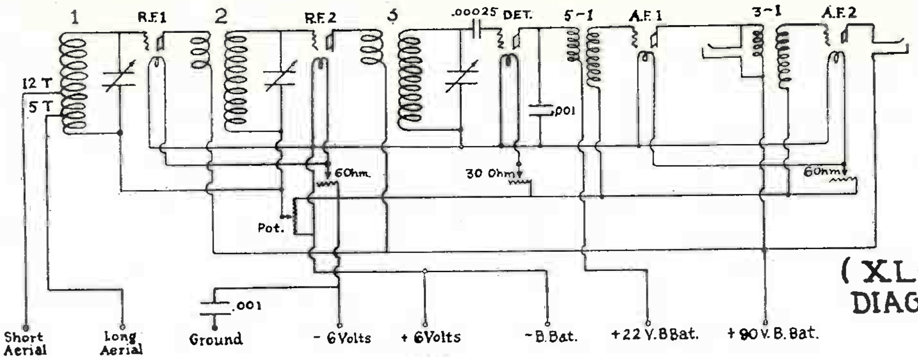

(XL-5 DIAGRAM)

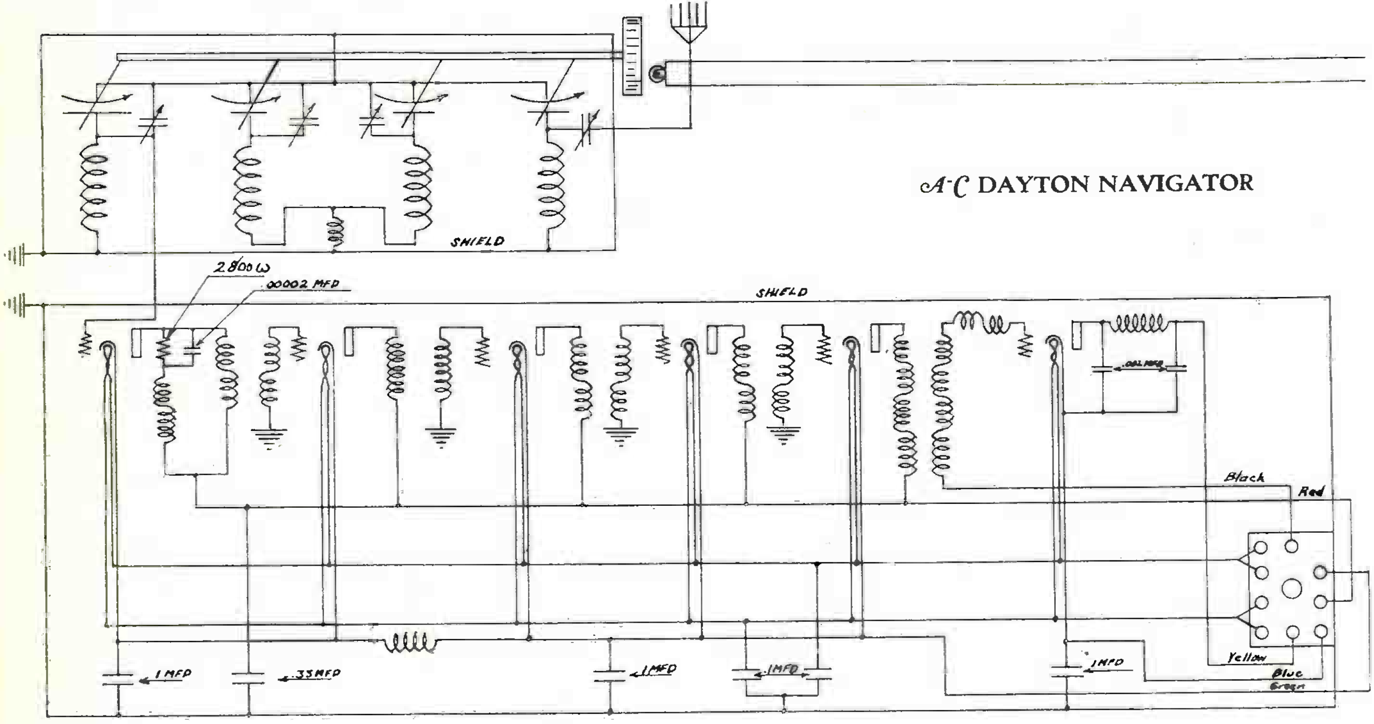

A-C DAYTON NAVIGATOR

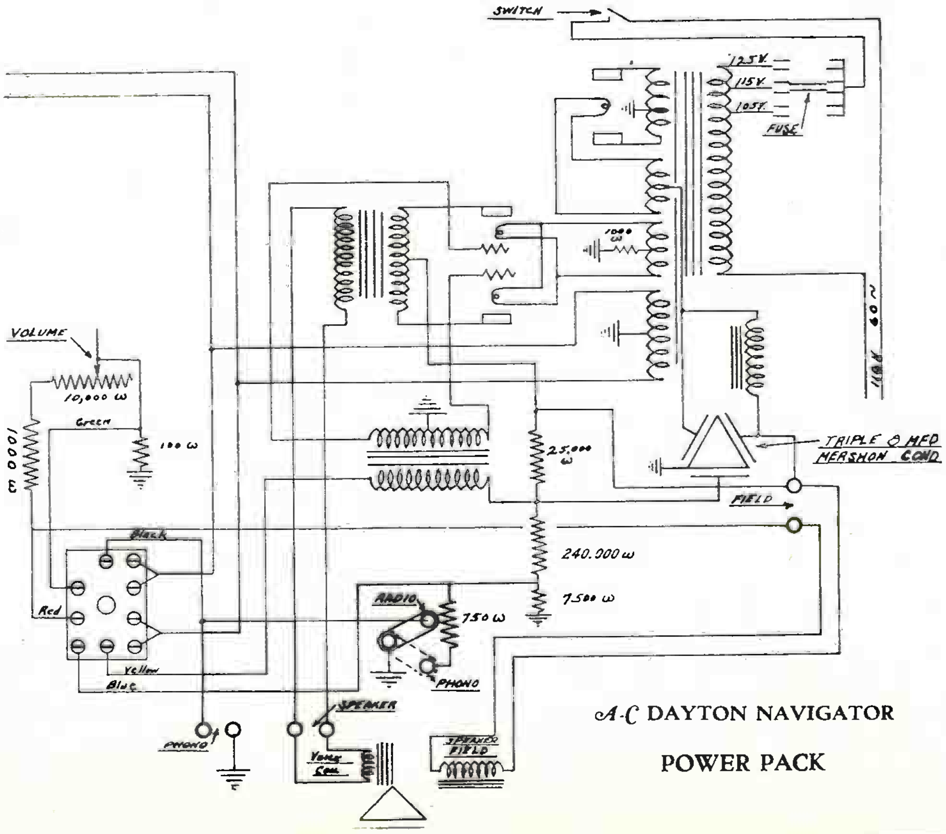

A-C DAYTON NAVIGATOR

POWER PACK

ACME ELECTRIC CO.

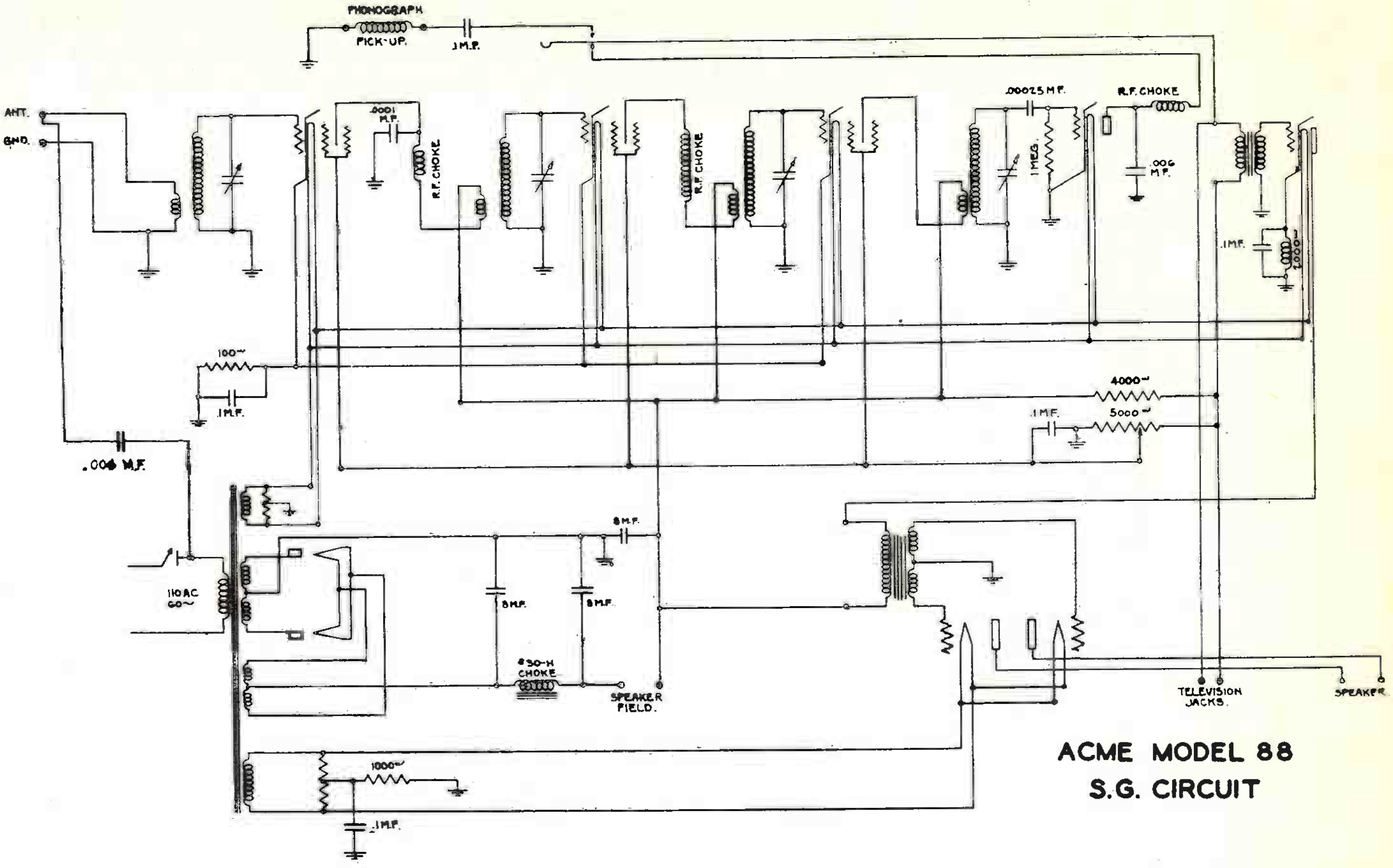

ACME MODEL 88
S.G. CIRCUIT

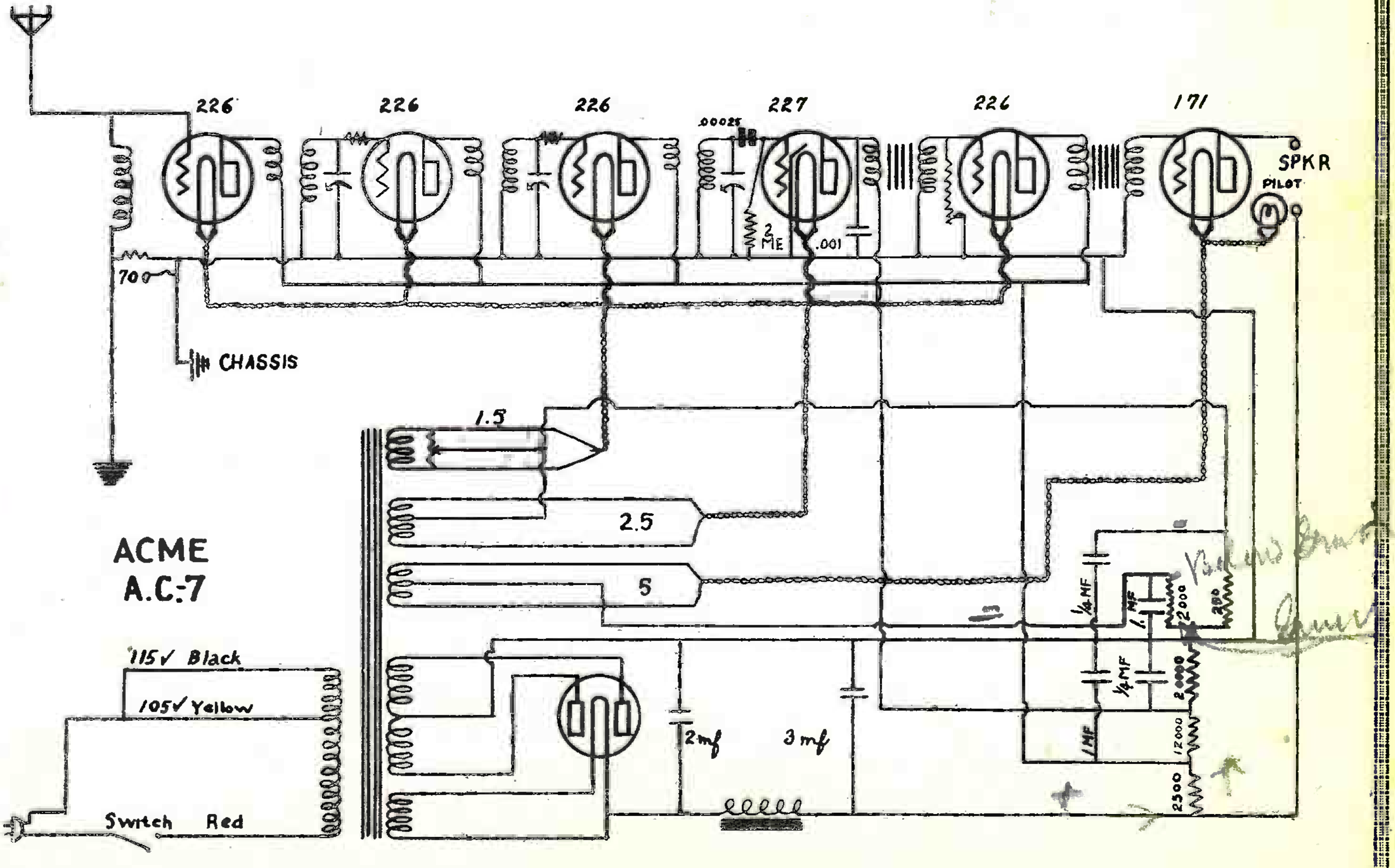

ACME
A.C.-7

9 tube

ALL AMERICAN MOHAWK CORP.

The diagrams on this page are taken from the Wurlitzer Service Manual in which the circuit diagrams are identically the same with the exception that the power pack is split into two parts instead of one complete unit as used in the Lyric Models.

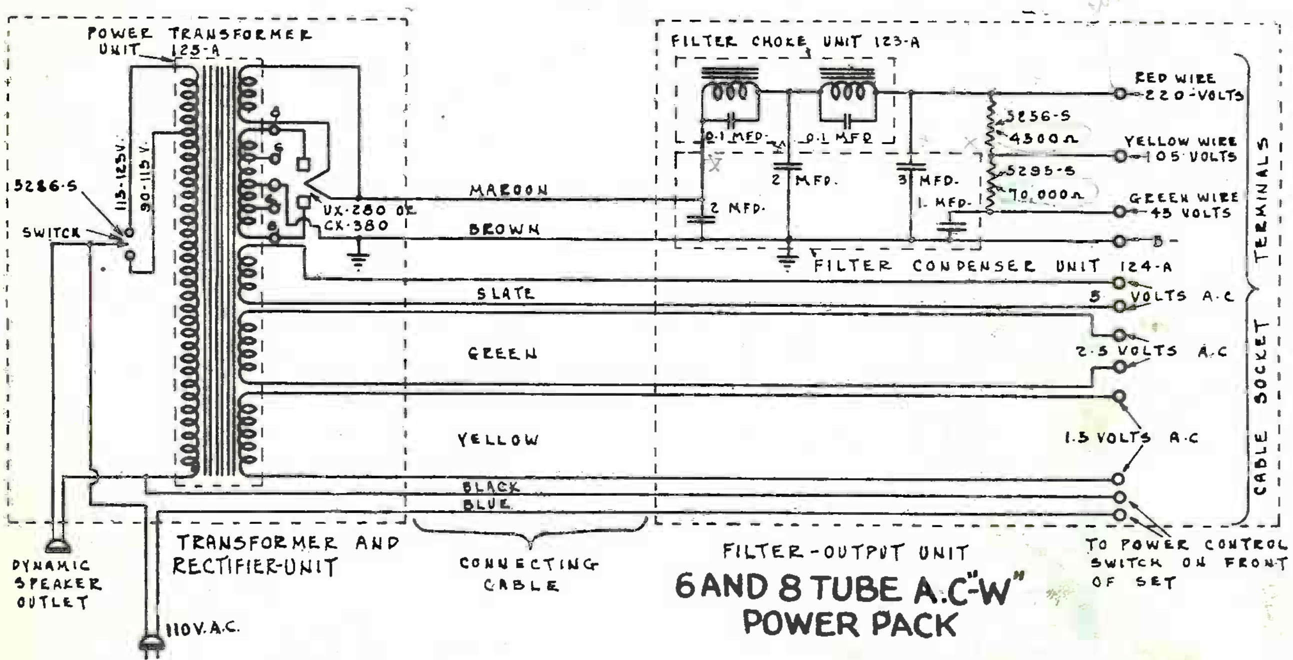

6 AND 8 TUBE A.C."W" POWER PACK

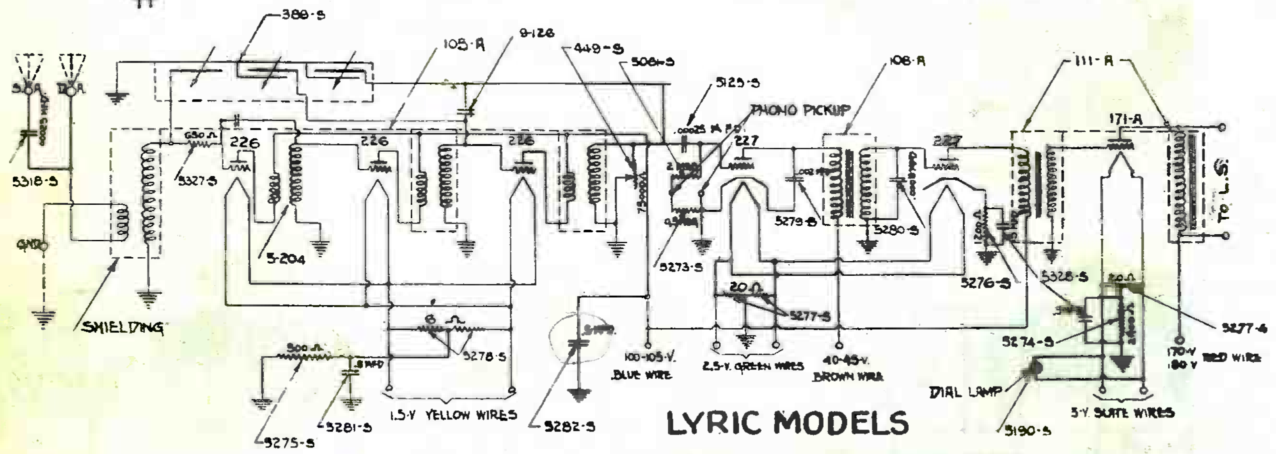

LYRIC MODELS
60-61-62-65 AND 66

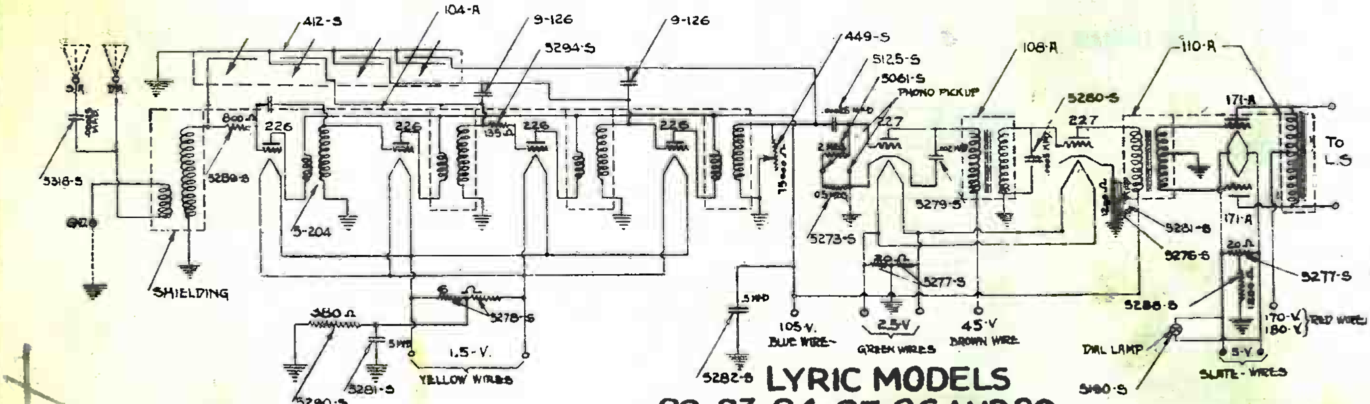

LYRIC MODELS
80-83-84-85-86 AND 88

NOTE: ABOVE INDICATED PART NUMBERS ARE THE ELECTRICAL PART AND ASSEMBLY NUMBERS OF ITEMS USED IN CIRCUIT.
WHEN ORDERING PARTS OR ASSEMBLIES SPECIFY THIS NUMBER AS WELL AS NAME OF ITEM.

ALL AMERICAN MOHAWK CORP.

VALUE & PART Nº OF CIRCUIT ELEMENTS

UNIT	CAP IN MFD	PART Nº	UNIT	CAP IN MFD		PART Nº	UNIT	RES IN OHM	PART Nº	UNIT	RES IN OHM	PART Nº
C1	0.5 & 0.5	5530-S	C8	1.0	COND. BANK					R7	½ MEG.	5273-S
C2	0.45 & 0.025	5543-S	C9	3.0			R2	6	5278-S	R8	2 MEG.	5061-S
C3	0.00025	5125-S	C10	2.0		563-S	R3	380	5520-S	R9	12000	620-S
C4	0.0005	5280-S	C11	2.0			R4	20	5277-S	R10	70000	5295-S
C5	0.002	5303-S	C12	0.1			R5	40	5268-S	R11	25000	5172-S
C6	1.0	INCL. IN COND. BANK	C13	0.04		5524-S	R6	1200	5521-S			
C7	0.5											

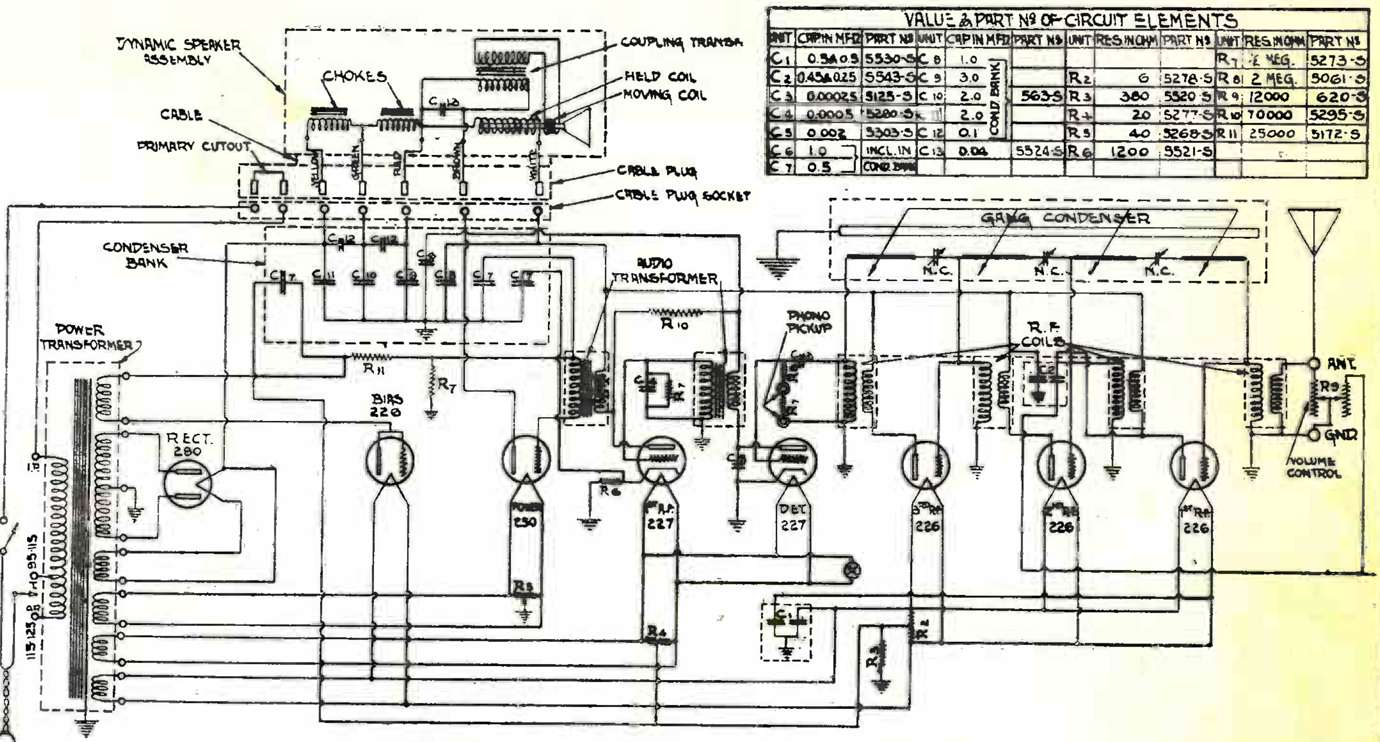

MODEL Nº 70,73 AND 75

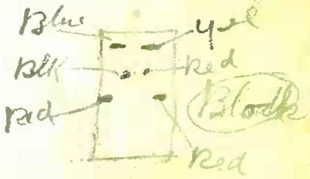

NO. 90 CHASSIS 60 CYCLE

180-W

VALUE AND PART NUMBER OF CIRCUIT ELEMENTS

UNIT	CAP IN MFD	PART Nº	UNIT	CAP IN MFD	PART Nº	UNIT	CAP MFD	PART Nº	UNIT	RES IN OHMS	PART Nº	UNIT	RES IN OHMS	PART Nº	UNIT	RES IN OHMS	PART Nº	UNIT	RES IN OHMS	PART Nº
C-1	0.1 ONE UNIT	5593-S	C-7	0.001	5124-S	C-13	0.1 COND BANK	190-R	R-1	380	5520-S	R-7	70,000	5295-S	R-13	25,000	5172-S	R-19	6,000	5407-S
C-2	0.1	5593-S	C-8	0.01	5803-S	C-14	2.0		R-2	10000	731-S	R-8	2 Megohms	5061-S	R-14	0.5 Megohm	5221-S			
C-3	0.5 ONE UNIT	5592-S	C-9	0.01	5803-S	C-15	2.0		R-3	1500	6004-S	R-9	0.5 -	5221-S	R-15	2,400	5274-S			
C-4	0.5	5592-S	C-10	0.5		C-16	2.0		R-4	100	5594-S	R-10	0.5 -	5221-S	R-16	20	5277-S			
C-5	0.00025	5125-S	C-11	0.5					R-5	20	5277-S	R-11	2,400	5274-S	R-17	1,000	5559-S			
C-6	0.001	5124-S	C-12	1.0 Cond Bank					R-6	70,000	5295-S	R-12	70,000	5295-S	R-18	6,000	5407-S			

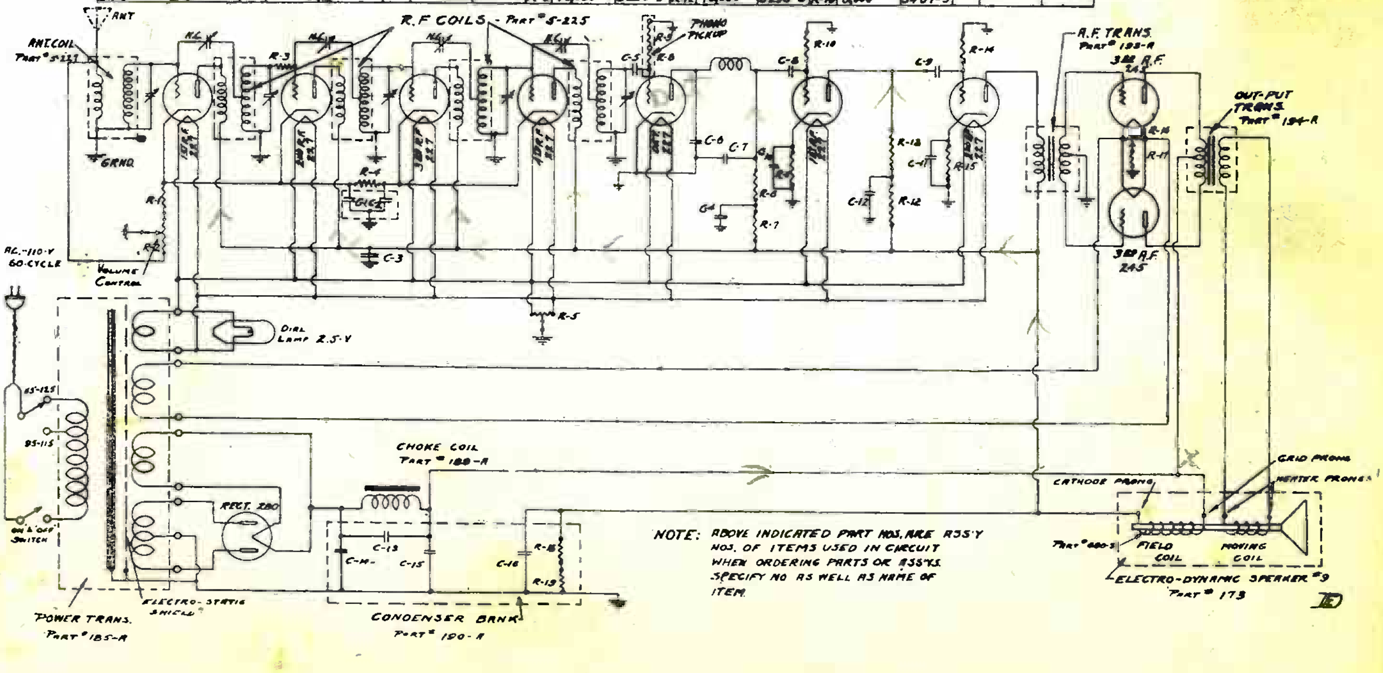

NOTE: ABOVE INDICATED PART NOS. ARE ASS'Y NOS. OF ITEMS USED IN CIRCUIT WHEN ORDERING PARTS OR ASS'YS. SPECIFY NO AS WELL AS NAME OF ITEM.

ALL AMERICAN MOHAWK CORP.

182-W

VALUE AND PART No OF CIRCUIT ELEMENTS

UNIT	CAP. IN MFD.	PART No	UNIT	CAP. IN MFD.	PART No	UNIT	CAP. IN MFD.	PART No	UNIT	RES. IN OHMS	PART No	UNIT	RES. IN OHMS	PART No	UNIT	RES. IN OHMS	PART No
C1	0.1	5593-5	C5	1.0		C9	0.00025	5125-5	R1	380	5520-5	R5	100	5594-5	R9	20	5277-5
C2	0.5 ONE	5592-5	C6	1.0	708-5	C10	0.5	5612-5	R2	10000	781-5	R6	10000	5170-5	R10	1000	5559-5
C3	0.5 UNIT	5592-5	C7	1.0					R3	20	5277-5	R7	70000	5295-5	R11	6000	5568-5
C4	0.002	5596-5	C8	2.0					R4	1500	6004-5	R8	1000	6005-5			

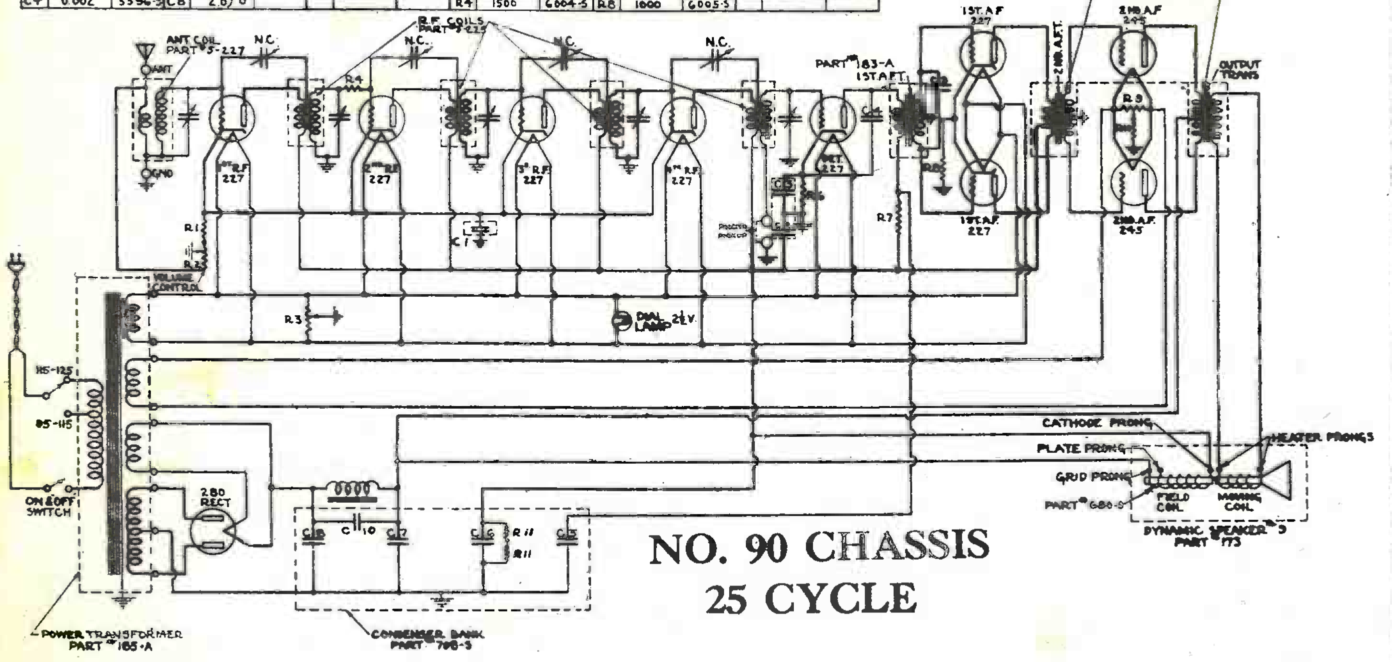

NO. 90 CHASSIS
25 CYCLE

181-W

VALUE AND PART No OF CIRCUIT ELEMENTS

UNIT	CAP. IN MFD.	PART No	UNIT	CAP. IN MFD.	PART No	UNIT	RES. IN OHMS	PART No	UNIT	RES. IN OHMS	PART No	UNIT	[illegible]	PART No
C1	Two-.5	5328-5	C5	2 Cond.		R1	10000	731-5	R5	70000	5295-5	R9	1000	5559-5
C2	Two-.5	5592-5	C6	1 Bank	187-R	R2	300	3582-5	R6	25000	5172-5	R10	2000	[illegible]
C3	.01	5603-5	C7	.1		R3	25000	5172-5	R7	5 MEG.	5273-5	R11	6000	[illegible]
C4	.00025	5125-5	C8	.002	5596-5	R4	10000	5170-5	R8	20	5277-5	C-9	.001	5126-5

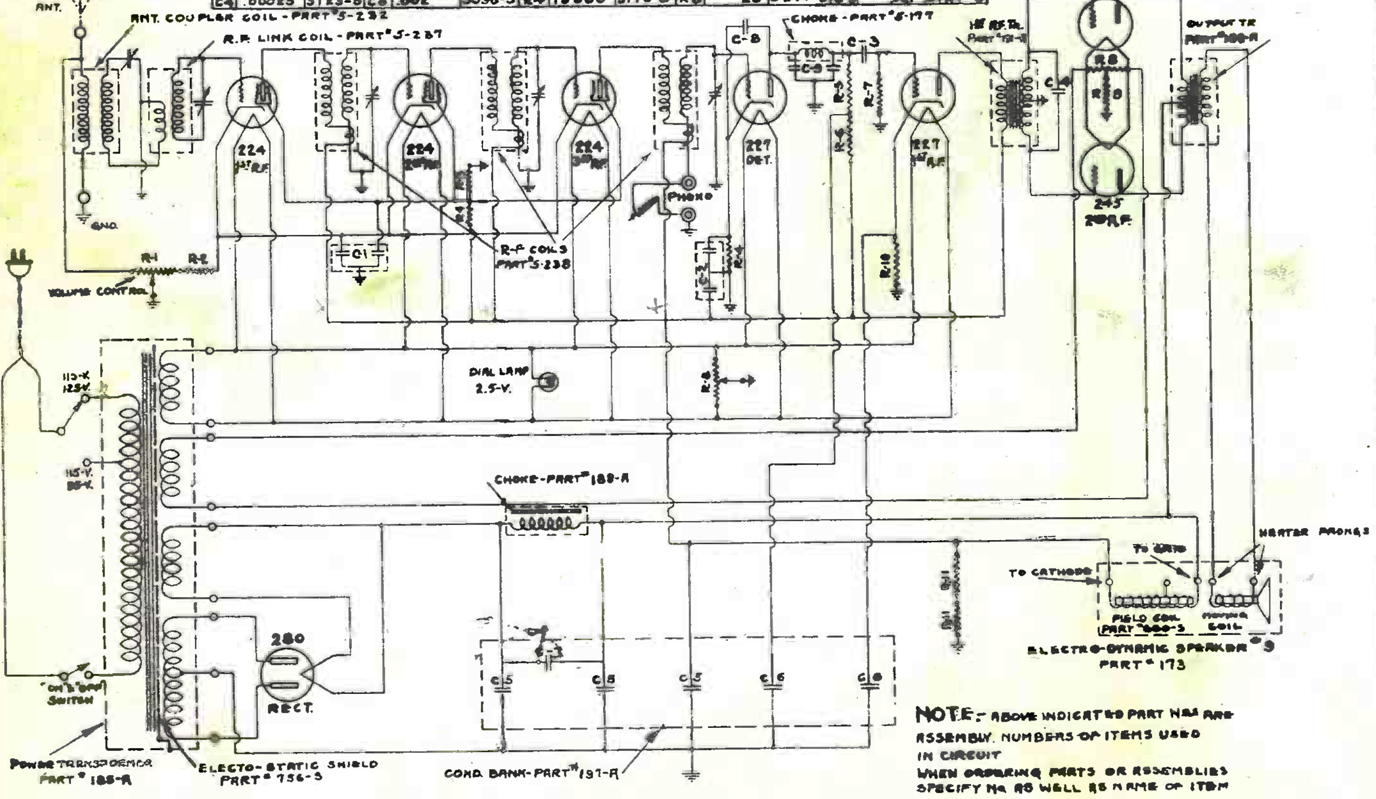

NOTE: ABOVE INDICATED PART HAS ARE ASSEMBLY, NUMBERS OF ITEMS USED IN CIRCUIT
WHEN ORDERING PARTS OR ASSEMBLIES SPECIFY No AS WELL AS NAME OF ITEM

NO. 96 CHASSIS 60 CYCLE

Radio Service Data Sheet

ALL-AMERICAN "MOHAWK" ONE-DIAL RECEIVERS
BATTERY AND A.C. 226-227

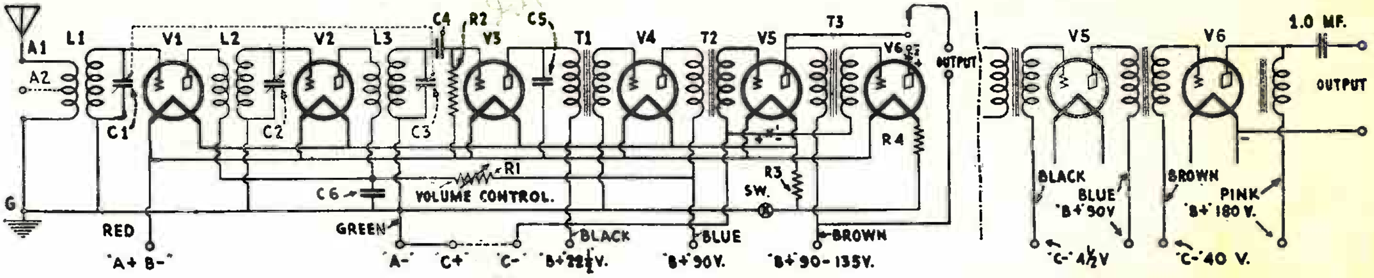

Above. Battery model of the "Mohawk" One-Dial receiver. If the original switching system for cutting V6 into the circuit is to be retained, special connections must be employed, as described in the text. At right: Modifications in later models: this standard arrangement of the output stage provides for the use of a power tube at V6.

There are two principal variations in the battery-model Mohawk receiver. The first circuit, shown above does not make provisions for a power tube at V6; six type '01A tubes are required. A 5-wire cable is used. An odd arrangement of the A.F. output circuit, to select two or three stages of A.F., by means of tip-jacks and a plug, necessitates placing the additional battery required for power-tube operation on the plate side of the A.F. output, at the point marked X2 (otherwise, this supplementary potential would be added to the plate supply of V5). The corresponding "C" potential is added at X1.

In later models, provisions were made for a power tube; and the usual connections are shown at the right of the main diagram. The color code of the (7-wire) cable is then as follows: Green, "A—"; red, "A+"; white (connected to red), "B—"; slate, "B+" 22½ or 45 volts; blue, "B+" 67½ or 90 volts; pink, "B+" 90, 135 or 180 volts; black, "C—" 4½ volts; brown, "C—" 4½, 9, 22½ or 45 volts; yellow (connected to green), "C+".

The available constants for this receiver are as follows: L1, L2, L3, shielded R.F. transformers; volume control R1 is a 500,000-ohm variable resistor which turns off the set by operating switch SW when R1 is turned to extreme left; R2, 2 megs.; R3, 1¼-amp. filament ballast; R4, 1-ohm resistor; C4, .00025-mf.; C5, .002-mf.; C6, 0.5-mf. In some sets, R3 is a 10-ohm rheostat.

In later production a selectivity control was incorporated. This was in effect a single-pole, single-throw switch arranged to select either all, or half, the primary of L1.

The circuit of this receiver will oscillate; but is controlled by R1. Trimming plates are provided on the condenser gang.

The tube layout shown is the same for A.C. and battery models.

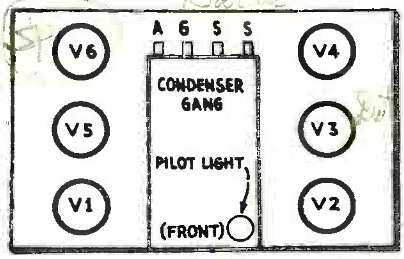

Layout of parts in receivers of the All-American "Mohawk" line.

The A.C. model requires four '26s for V1, V2, V4, V5; a '27 for V3; and a '71A for V6.

The constants of the A.C. model are as follows: C4, .00025-mf.; C5, .002-mf.; C6, C7, C8, C15, 0.5-mf.; C9, .003-mf.; C10, C11, 1.0-mf.; C12, 6-mf.; C13, 3-mf.; C14, 2-mf.; R1, 650 ohms; R2, 850 ohms; R3, 2 to 3 megs.; R4, R7, R8, 20 ohms; R5, R9, 1,000 to 1,200 ohms; R6, 0.5-ohm; R10, 2,000 ohms.

The heater of V3 is held at 45 volts positive. If this positive tap open-circuits, there will be a noticeable increase in hum.

Resistor R6 varies the heater current to V1 and V2. It has a value from 0.5- to 0.75-ohm. Lack of volume control may be due to a short in this unit; while a ground will result in hum.

Transformers T1, T2, T3 have a ratio of 3¾ to 1; T4, 1 to 1.

Uncontrollable circuit oscillation will result if R1 or R2 becomes shorted, and may be the result if R1 and R2 are interchanged. If the set cannot be made to oscillate on medium to high wavelengths, try changing the R.F. tubes; though this may be due to C15 being open. A particularly high noise level may be an indication of C9 being open.

The "Mohawk" receivers carry further designating names, such as "Navajo," "Iroquois," "Cortes," "Hiawatha," "Seminole." Some of these are table models, others consoles with or without speakers. One of the early models was designed to use Kellogg tubes, with their side connections for the heater leads.

The voltage divider of the current-supply unit used in the electric model calls for these resistor values: R11 ("B—" to "B+" 45) 6,500 ohms; R12 ("B+"45 to "B+"110) 6,000 ohms; R13 ("B+"110 to "B+"220) 1,600 ohms.

Attention is called to the fact that, although some of the circuit sheets which have been issued do not show a ground, there is a return circuit to ground for the power unit, as shown in the diagram at the bottom of this page.

The color-code of the Jones cable used in this receiver to couple the receiver to the power pack is as follows: Pink (2), 1½-volt filament supply for R.F. tubes V1 and V2 (the output of secondary S3); yellow (2), 1½-volt filament supply for A.F. tubes V4 and V5 (the output of secondary S5); black (2), 5-volt filament winding for power tube V6 (the output of secondary S6); purple and gray leads, the 2½-volt supply leads (from secondary S4) for the filament of detector tube V4; green, "B+" 45 volts; white, "B+" 110 to 150 volts; red, "B+" 220 to 250 volts; brown, the "B—" lead, is to be grounded.

Most receivers require a good ground connection; but this is particularly true of the "Mohawks," if hum is to be held at a minimum level.

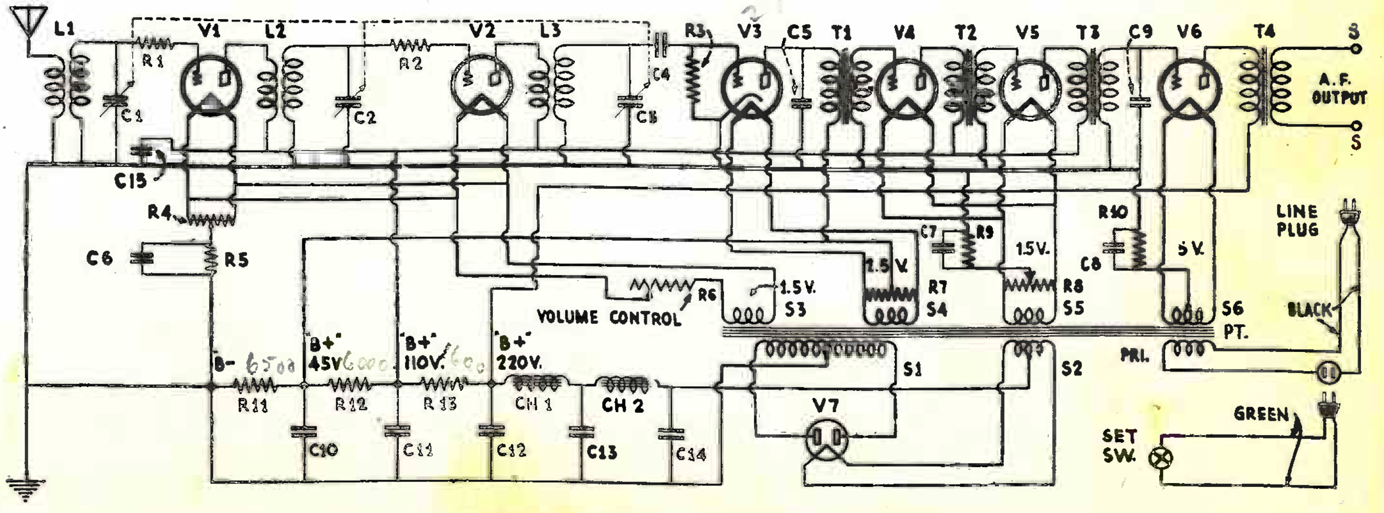

Schematic circuit of the A.C. design of the All-American "Mohawk" radio set. The color codes of its Jones cable and the voltage divider do not appear in the regular manual, but are given in the text of this sheet.

AMERICAN BOSCH MAGNETO CORP.

BATTERY OPERATED RECEIVERS

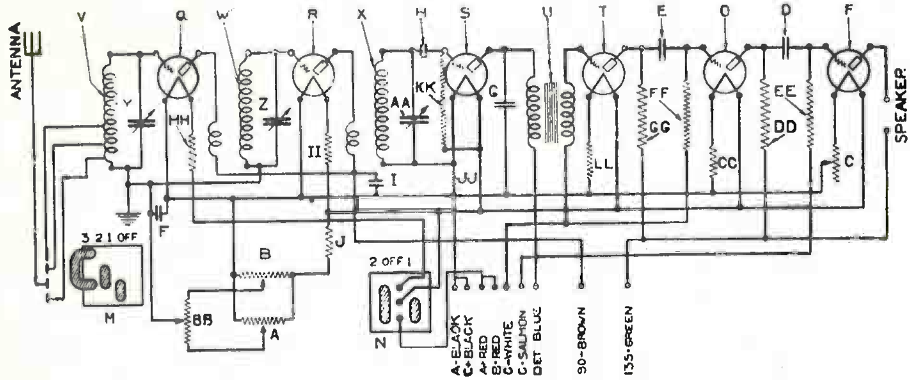

Model 16 Receiver—The "Amborola"

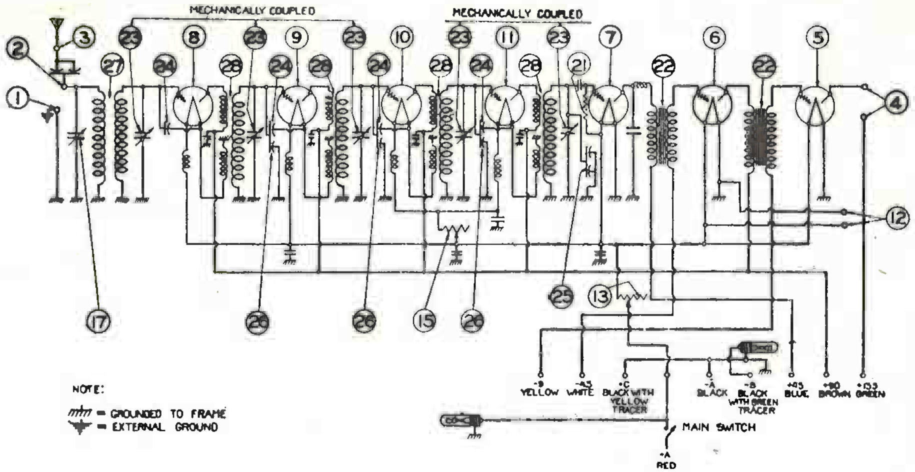

Model 27 Receiver—The "Amborada"

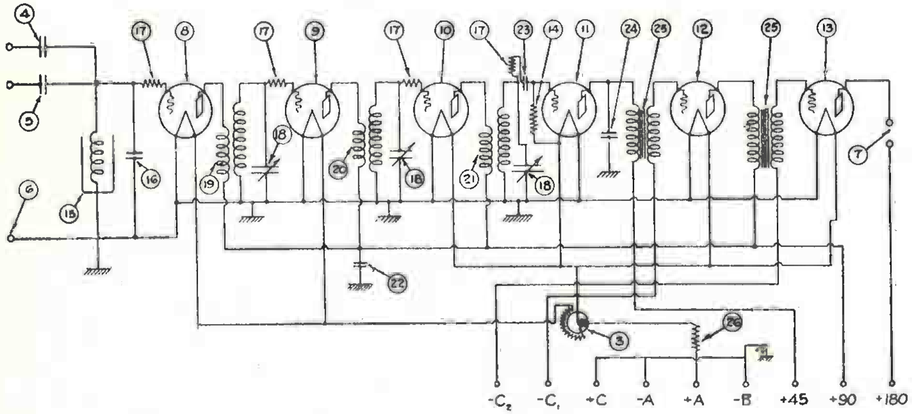

Model 46—The "Little Six"

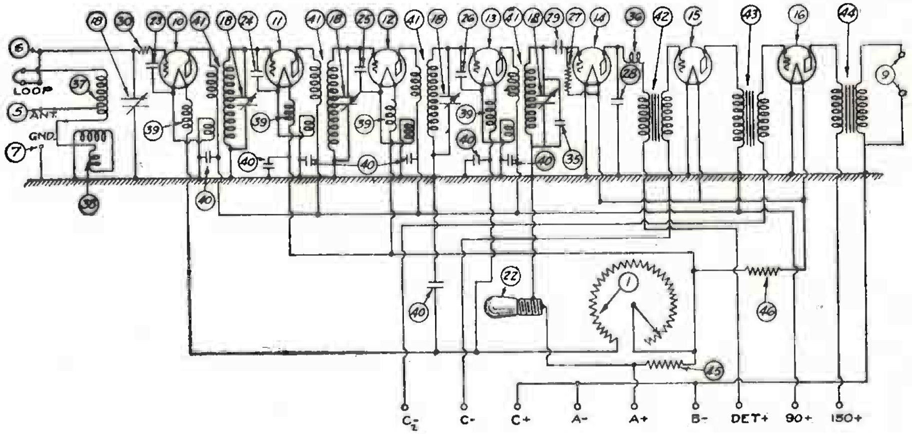

Models 57 and 87 Receivers

Radio Service Data Sheet

BOSCH "CRUISER," "ROYAL CRUISER," AND "IMPERIAL CRUISER" MODEL 35 BATTERY SETS

An unusual method of obtaining neutralization is observed in these popular "Cruisers." Windings (A) in coils L2 and L3 are in the negative filament leads of V1 and V2, for this purpose, and function in conjunction with condensers C7 and C8.

Resistor R1 is a master control to maintain the filament potential at five volts. Volume is further controlled through R2 (marked "Amplifier") which, at its position of highest resistance, operates switch SW1. Selectivity is governed by SW2 (marked "Clarifier") and C10. A nine-wire cable connects the current supply to the set.

As this model of the Bosch receiver is not provided with an output transformer, or choke coil and condenser, trouble may be experienced from de-polarized magnets in magnetic-type reproducers, if the leads of the reproducer have been accidentally reversed.

The location of the main rheostat, R1, is indicated in the top and bottom views of this receiver. The slot in the top of the control will be parallel with the front of the set for the five-volt setting.

Four '01A tubes and a '12A or '71A tube are recommended for this set.

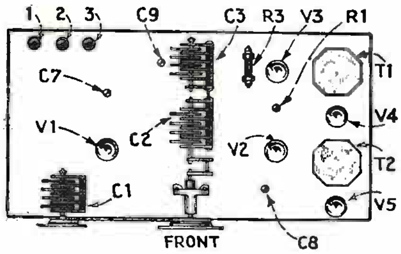

Top view of parts layout of Bosch "Cruisers." The coupling devices for C2, C3 are clearly shown.

Nearest to the panel is the knob that controls C2 and C3, the settings of which are indicated on the upper or "Main Tuning Scale." The other knob controls the antenna for tuning condenser C1, with its position indicated on the lower or "Antenna Tuning Scale." The reading on the lower scale depends, in part, on the length of the antenna.

This receiver is balanced like a regular neutrodyne receiver, a "dummy" or open-filament tube (or similar expedient) being used in place of the regular tube; first, in place of V2, and then as a substitute for V1. Adjustments of C7 and C8 are made for minimum signal. Condenser C9 resonates the detector circuit for maximum signal.

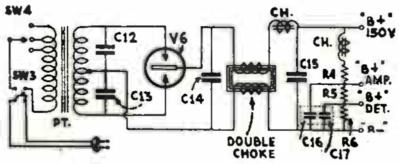

Schematic circuit of "Type BAN (Edition 3) Nobattry" eliminator.

If either of the above adjustments cannot be made, check the R.F. circuit for faults. Remove the shields from C1, C2 and C3, and note whether, at the zero setting of the dial, all the condenser rotors align perfectly straight at the tapered ends of the stators. Adjustment of the stators is accomplished through the bolts which join two end plates (if it is desired to change the spacing between interleaved rotor and stator plates); and the proper spacing here, for minimum setting, is easily obtained by adjustment of the screws on the condenser-shaft couplings.

If the condenser shafts lose their alignment, the condensers may be loosened and reset to the correct positions. Condenser C2 may be shifted for proper alignment after removing the coil assemblies.

With all condensers set at maximum capacity, the dial should indicate 100. If this reading is not obtained, compensation may be secured by adjustment of two stop screws provided for this purpose.

A six-ohm rheostat may be used as replacement for R1; R2 has a resistance of about 30 ohms; R3 is the usual 2-meg. leak; C1, C2, C3 are the tuning condensers; C4 is .00025 mf.; C5, C6, 1.0 mf. each; C7, C8, C9, 100 mmf., maximum (approx.); C10 125 mmf. (approx.); C11 .006 mf.

The "Type BAN" (Edition 3) "Nobattry" eliminator is usually used with this model of the "Cruiser" line. (Other models of the "Cruiser" embodying somewhat the same general features but varying in details are the "Model 96DC, 110 volts"; "Model 156," (for direct current); "Models 66, 76, 76L" (battery-operated); "Models 66AC. 96, 116, 136" (for A.C. operation).

Constants for the above "Nobattry" unit are as follows: C12, C13 0.1-mf.; C14, 3 mf.; C15. 2 mf.; C16, C17, 2 mf.; R4, 4,000 ohms (or a variable 5,000-ohm unit); R5, 15,000 ohms; R6, 25,000 ohms. V6 is a gaseous rectifier; SW3 the power switch. The principal choke unit in the filter system is a "double" choke.

Although the circuit diagram does not indicate that there is a mechanical connection between C2, C3, and antenna condenser C1, there is a slip coupling which permits C1 to turn readily when the other two tuning condensers are adjusted or to be operated independently of these two. More complete control of the dial reading designated "Antenna Tuning Scale" will be secured by making C10 one of the compact adjustable units now available. Then, by varying C10 and SW2, it will be possible to obtain nearly identical readings on both scales for any average antenna conditions.

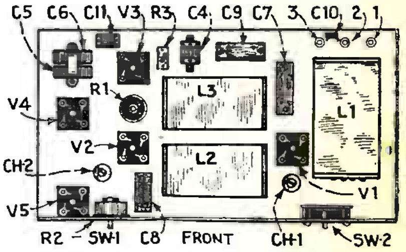

Underside appearance of "Model 35" receivers. Units R1, C7, C8, C9, shown here, adjust from above.

If it is found that circuit oscillation cannot be stopped, test windings A for reversed connections; checking L3 first and L2 last.

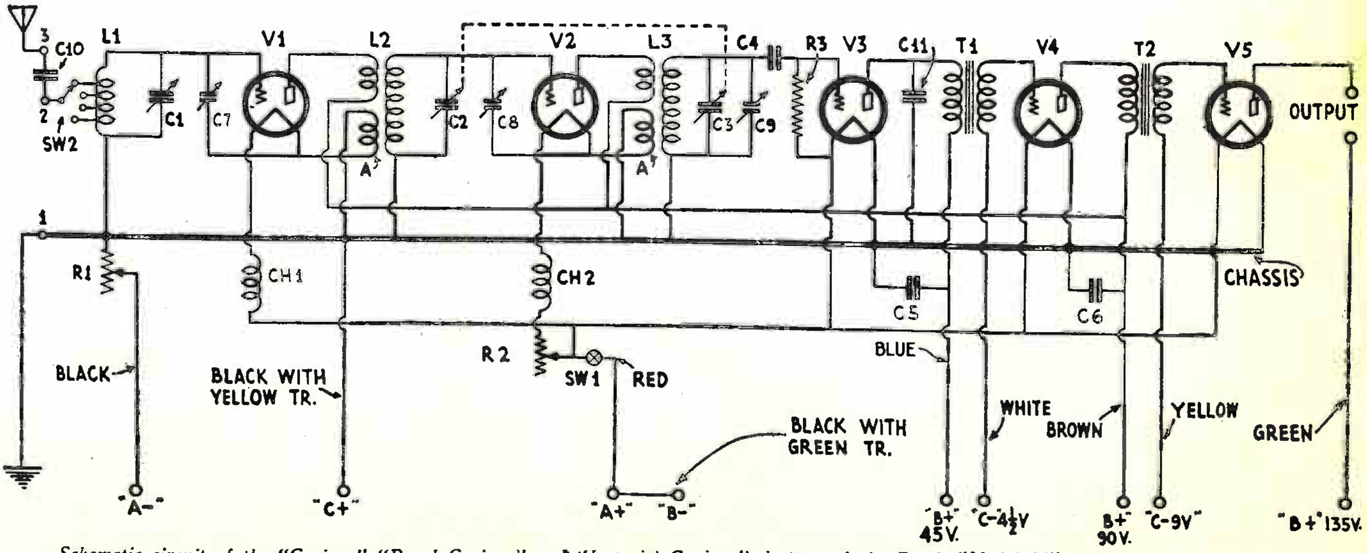

Schematic circuit of the "Cruiser," "Royal Cruiser," and "Imperial Cruiser," designs of the Bosch "Model 35" battery sets. The arrangement of the neutralizing circuit is such that the respective grids are connected to the grounded "A—" lead if the neutralizing condensers short, without affecting any of the batteries in the set.

AMERICAN BOSCH MAGNETO CORP.

A.C. RECEIVER

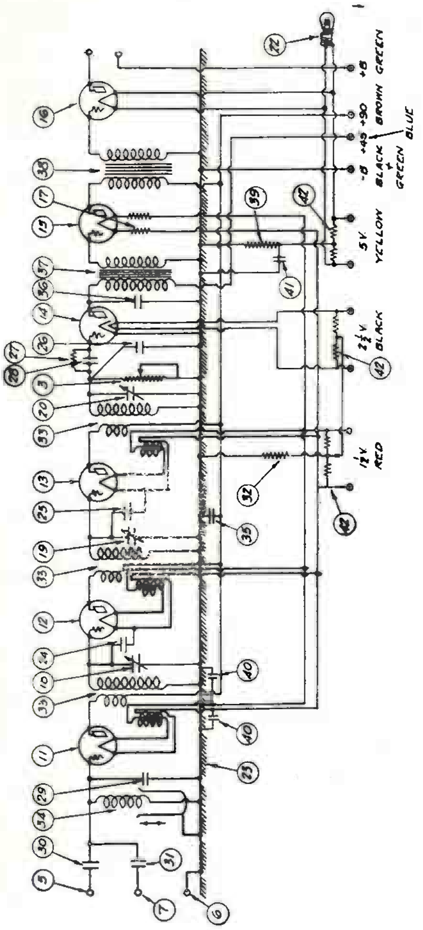

Models 66AC, 96, 116, 136 Receivers (for AC operation)

A.C. RECEIVER

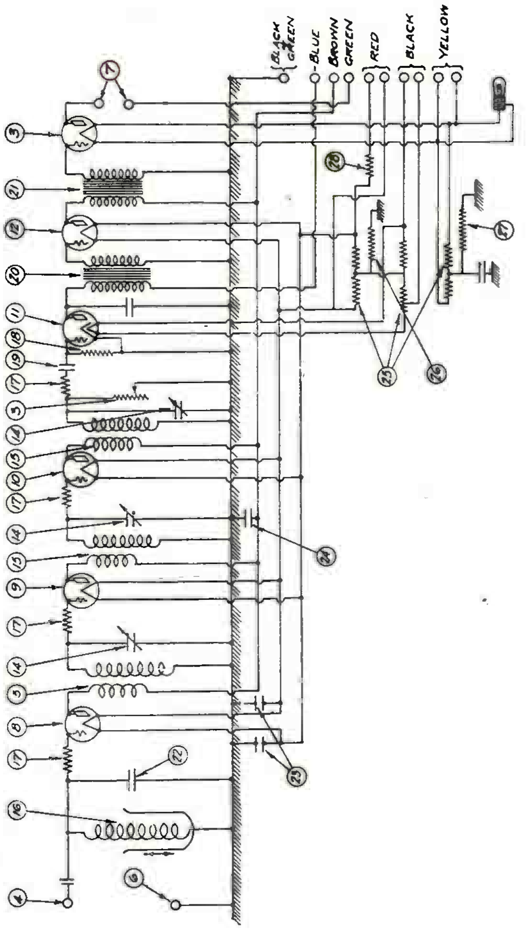

Models 126, 146, 166, 176, 46AC (AC operation)

BATTERY RECEIVER

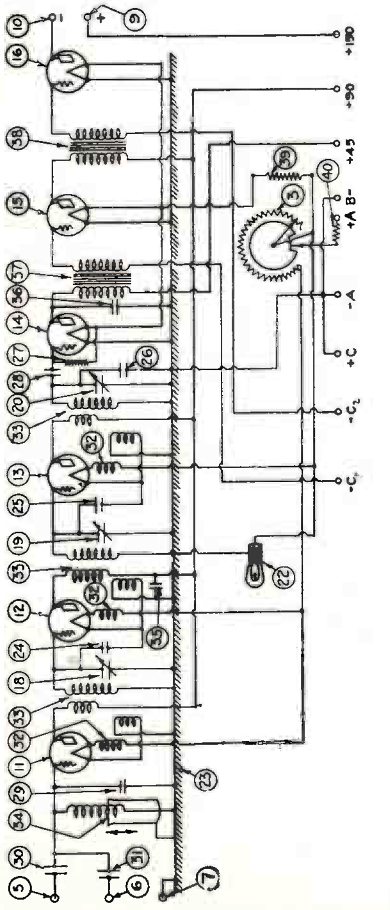

Models 66, 76, and 76L Receivers—The "Cruiser"

A.C. RECEIVER

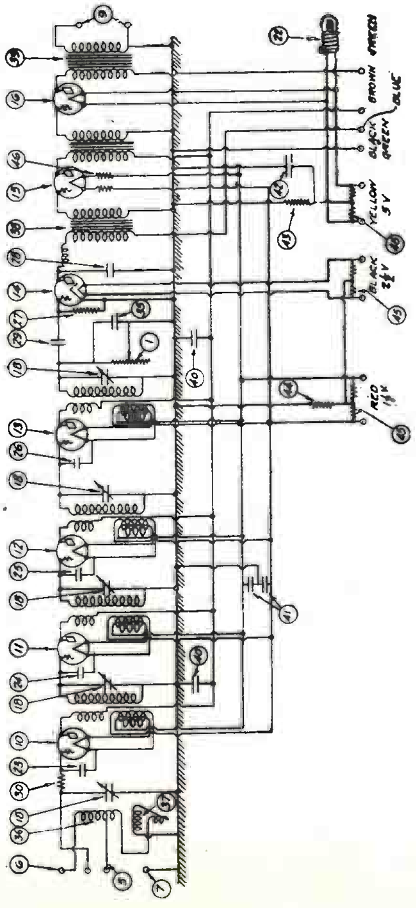

Model 107 Receiver (for AC operation)

AMERICAN BOSCH MAGNETO CORP.

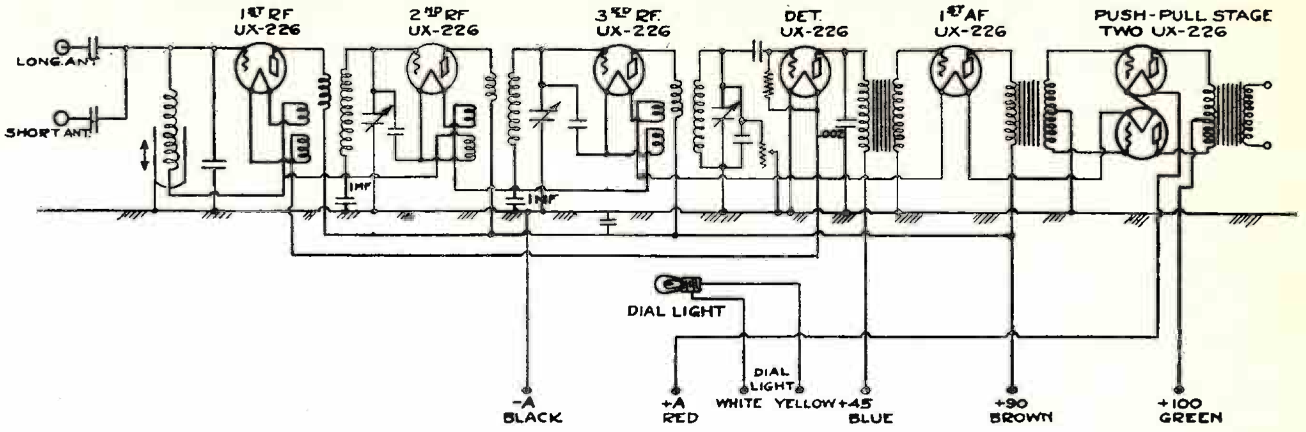

Model 96DC 110 Volt "Cruiser"

Model 156 Receiver "Cruiser"

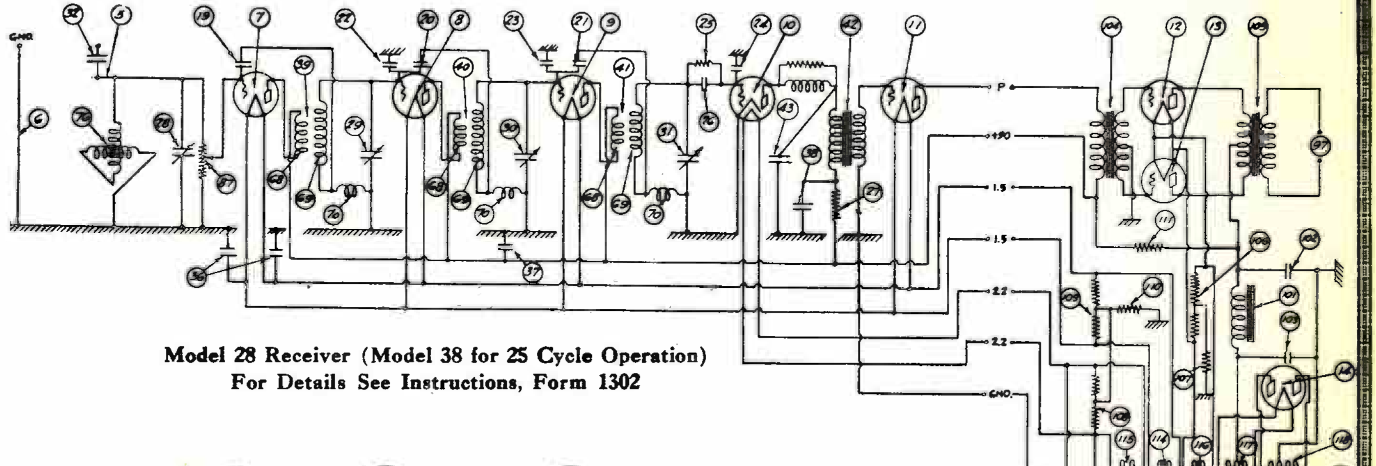

Model 28 Receiver (Model 38 for 25 Cycle Operation)
For Details See Instructions, Form 1302

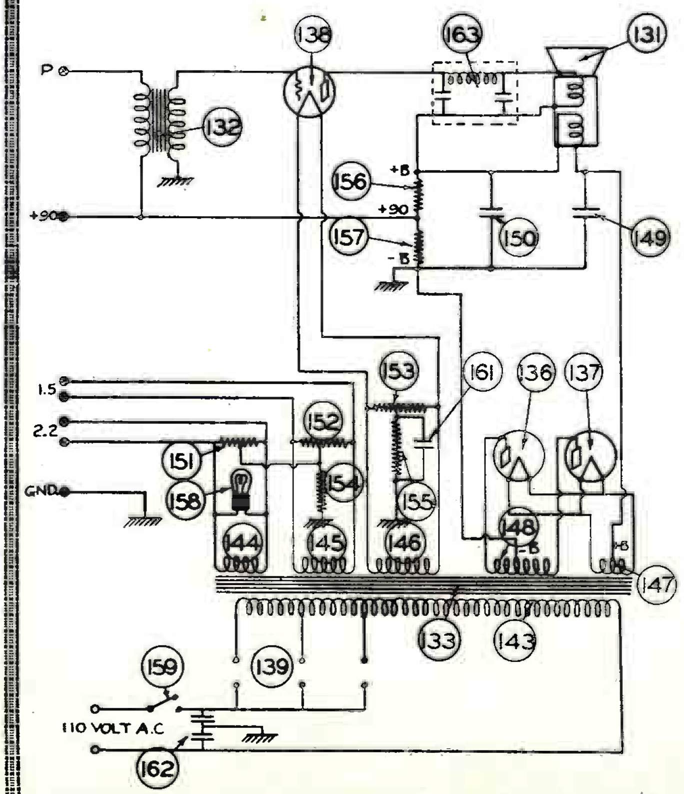

Model 825 Super Dynamic Power Pack. Used with Model 28 Chassis only to form Model 29 Receiver.

25—Grid Leak 3 megohms
26—Grid Condenser .00025 mfd.
27—Plate Resistor 50,000 ohms
32—External Cond. .00015 mfd.
36—By-Pass Condensers .5 mfd.
37—By-Pass Condenser 1. mfd.
38—By-Pass Condenser 1. mfd.
43—By-Pass Condenser .002 mfd.
87—Volume Control 500,000 ohms
102—Filter Condenser 2 mfd.
103—Filter Condenser 4 mfd.
107—Bias Resistor 1500 ohms
110—Bias Resistor 300 ohms
111—"B" Resistor 5000 ohms

MODEL 825 POWER PACK

149—Filter Condenser 4 mfd.
150—Filter Condenser 2 mfd.
154—Bias Resistor 500 ohms
155—Bias Resistor 2000 ohms
156—Plate Resistor 10,000 ohms
157—Plate Resistor 10,000 ohms
161—By-Pass Condenser 1. mfd.
162—Buffer Condensers
163—Filter

AMERICAN BOSCH MAGNETO CORP.

MODEL 48 RECEIVER (MODEL 49 FOR 25~)

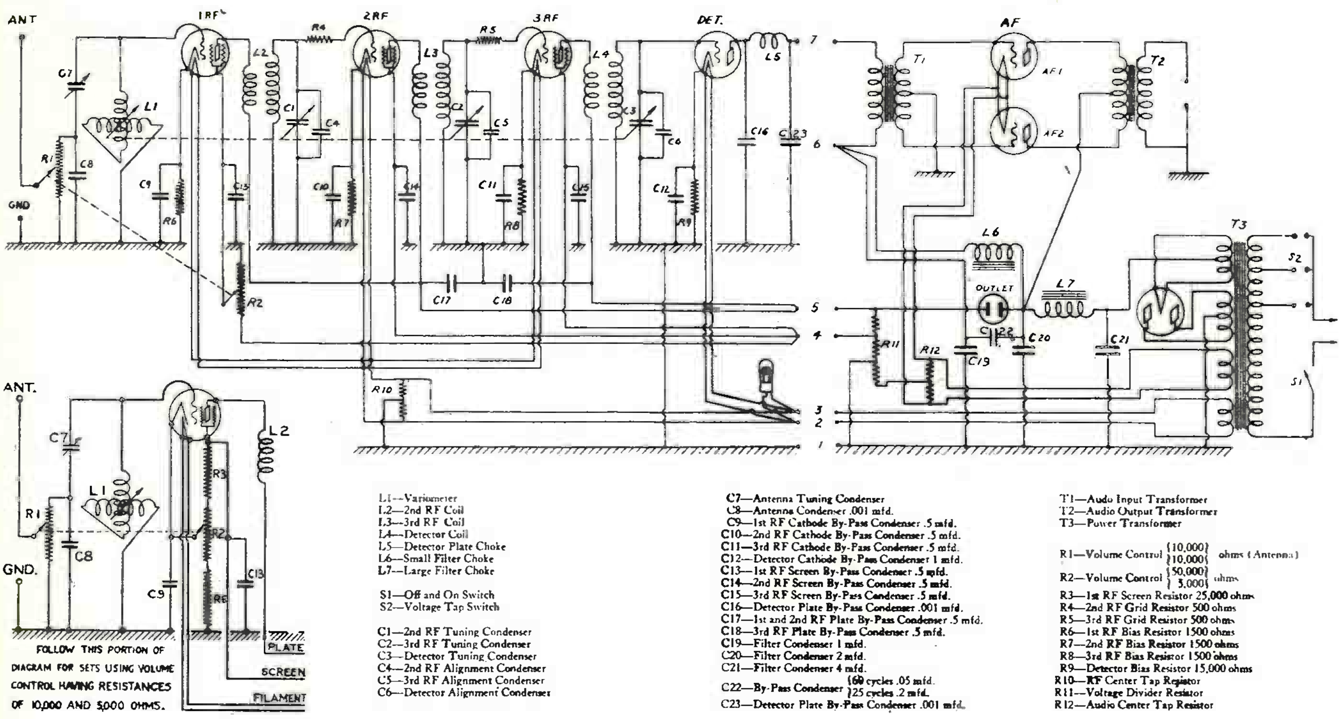

FOLLOW THIS PORTION OF DIAGRAM FOR SETS USING VOLUME CONTROL HAVING RESISTANCES OF 10,000 AND 5,000 OHMS.

L1—Variometer
L2—2nd RF Coil
L3—3rd RF Coil
L4—Detector Coil
L5—Detector Plate Choke
L6—Small Filter Choke
L7—Large Filter Choke

S1—Off and On Switch
S2—Voltage Tap Switch

C1—2nd RF Tuning Condenser
C2—3rd RF Tuning Condenser
C3—Detector Tuning Condenser
C4—2nd RF Alignment Condenser
C5—3rd RF Alignment Condenser
C6—Detector Alignment Condenser

C7—Antenna Tuning Condenser
C8—Antenna Condenser .001 mfd.
C9—1st RF Cathode By-Pass Condenser .5 mfd.
C10—2nd RF Cathode By-Pass Condenser .5 mfd.
C11—3rd RF Cathode By-Pass Condenser .5 mfd.
C12—Detector Cathode By-Pass Condenser 1 mfd.
C13—1st RF Screen By-Pass Condenser .5 mfd.
C14—2nd RF Screen By-Pass Condenser .5 mfd.
C15—3rd RF Screen By-Pass Condenser .5 mfd.
C16—Detector Plate By-Pass Condenser .001 mfd.
C17—1st and 2nd RF Plate By-Pass Condenser .5 mfd.
C18—3rd RF Plate By-Pass Condenser .5 mfd.
C19—Filter Condenser 1 mfd.
C20—Filter Condenser 2 mfd.
C21—Filter Condenser 4 mfd.
C22—By-Pass Condenser {60 cycles .05 mfd. / 25 cycles .2 mfd.}
C23—Detector Plate By-Pass Condenser .001 mfd.

T1—Audo Input Transformer
T2—Audio Output Transformer
T3—Power Transformer

R1—Volume Control {10,000 / 10,000} ohms (Antenna)
R2—Volume Control {50,000 / 5,000} ohms
R3—1st RF Screen Resistor 25,000 ohms
R4—2nd RF Grid Resistor 500 ohms
R5—3rd RF Grid Resistor 500 ohms
R6—1st RF Bias Resistor 1500 ohms
R7—2nd RF Bias Resistor 1500 ohms
R8—3rd RF Bias Resistor 1500 ohms
R9—Detector Bias Resistor 15,000 ohms
R10—RF Center Tap Resistor
R11—Voltage Divider Resistor
R12—Audio Center Tap Resistor

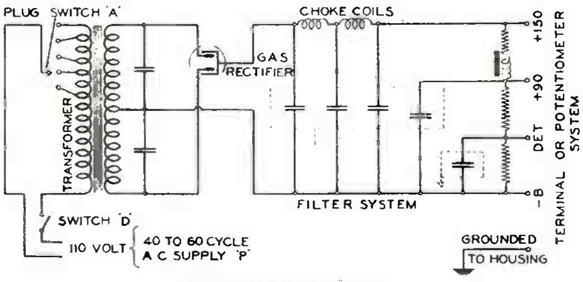

Type BAN Edition 2 Nobattry

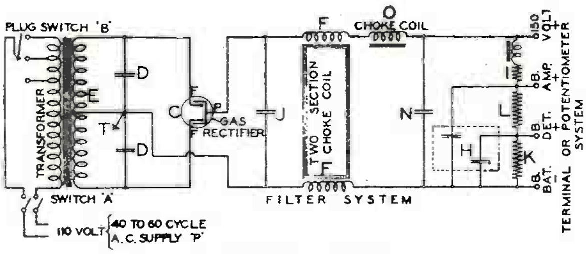

Type BAN Edition 3 Nobattry
Type BAN Edition 4 Nobattry (for 25 cycles)
Type BAN Edition 4 Model 505 Nobattry

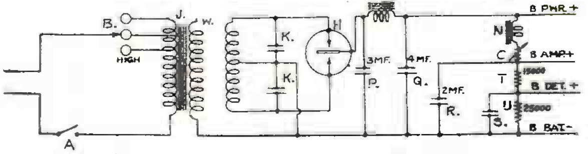

Type BAN Edition 5 Nobattry—Models 501, 502, 503.

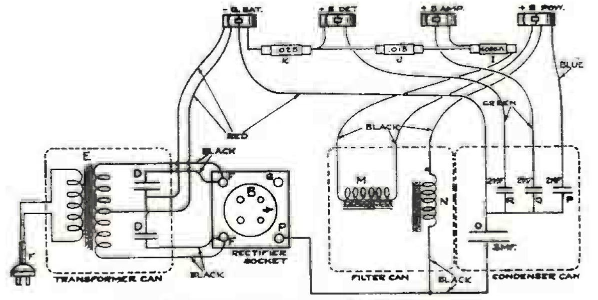

Type BAN Edition 6 Nobattry—Models 504 and 506

AMERICAN BOSCH MAGNETO CORP.

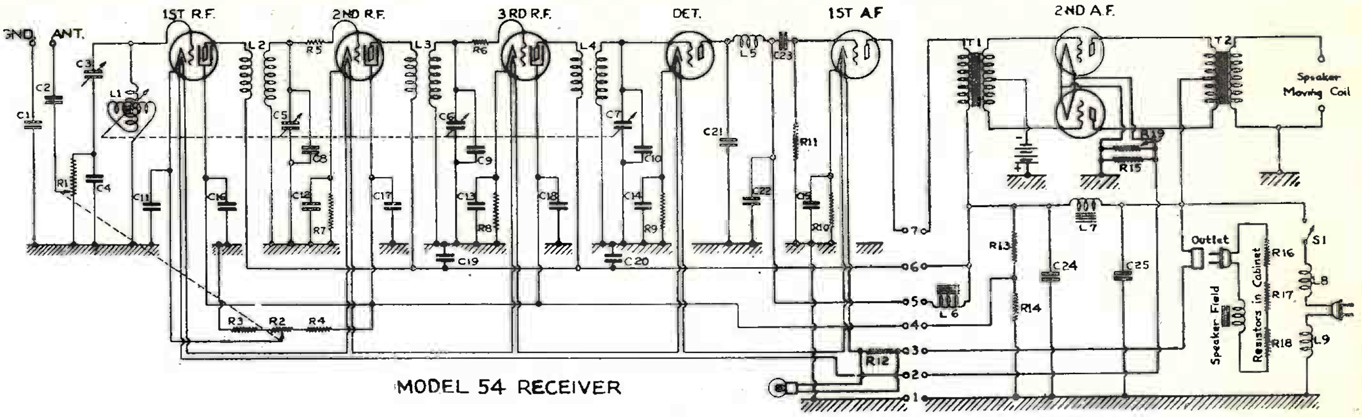

MODEL 54 RECEIVER

L 1—Variometer
L 2—2nd R. F. coil
L 3—3rd R. F. coil
L 4—Detector coil
L 5—Detector choke coil
L 6—Detector filter choke
L 7—Main filter choke
L 8—Line filter choke
L 9—Line filter choke

C 1—Ground condenser .005
C 2—Antenna condenser .001
C 3—Trimming condenser
C 4—Antenna condenser .00025 mfd.
C 5—2nd R. F. tuning condenser
C 6—3rd R. F. Tuning condenser
C 7—Detector tuning condenser
C 8—2nd R. F. alignment condenser
C 9—3rd R. F. alignment condenser
C10—Detector alignment condenser
C11—1st R. F. cathode by-pass condenser .5 mfd.

R.6—3rd R. F. grid resistor 250 ohms
R 7—2nd R. F. bias resistor 1500 ohms
R 8—3rd R. F. bias resistor 1500 ohms
R 9—Detector bias resistor 40,000 ohms
R10—1st A. F. bias resistor 1500 ohms
R11—1st A. F. grid resistor 1 megohm
R12—Dial light resistor .75 ohms
R13—Voltage divider resistor 25000 ohms
R14—voltage divider resistor 15000 ohms
R15—2nd A. F. filament resistor 5 ohms
R16—Filament resistor 20 ohms
R17—Filament resistor 20 ohms
R18—Filament resistor 20 ohms
R19—2nd A. F. filament resistor 22 ohms

TP—Terminal plate
S 1—Main switch

T 1—Audio input transformer
T 2—Audio output transformer

C12—2nd R. F. cathode by-pass condenser .5 mfd.
C13—3rd R. F. cathode by-pass condenser .5 mfd.
C14—Detector cathode by-pass condenser 1. mfd.
C15—1st A. F. cathode by-pass condenser 1. mfd.
C16—1st R. F. screen by-pass condenser .5 mfd.
C17—2nd R. F. screen by-pass condenser .5 mfd.
C18—3rd R. F. screen by-pass condenser .5 mfd.
C19—Plate by-pass condenser .5 mfd.
C20—Plate by-pass condenser .5 mfd.
C21—Detector plate by-pass condenser .001 mfd.
C22—Detector plate by-pass condenser .001 mfd.
C23—1st A. F. coupling condenser .005 mfd.
C24—Filter condenser 4. mfd.
C25—Filter condenser 4. mfd.

R 1—Volume control 5000 ohms
R 2—Volume control 5000 ohms
R 3—Screen resistor 500 ohms
R 4—Screen resistor 25000 ohms
R 5—2nd R. F. grid resistor 250 ohms

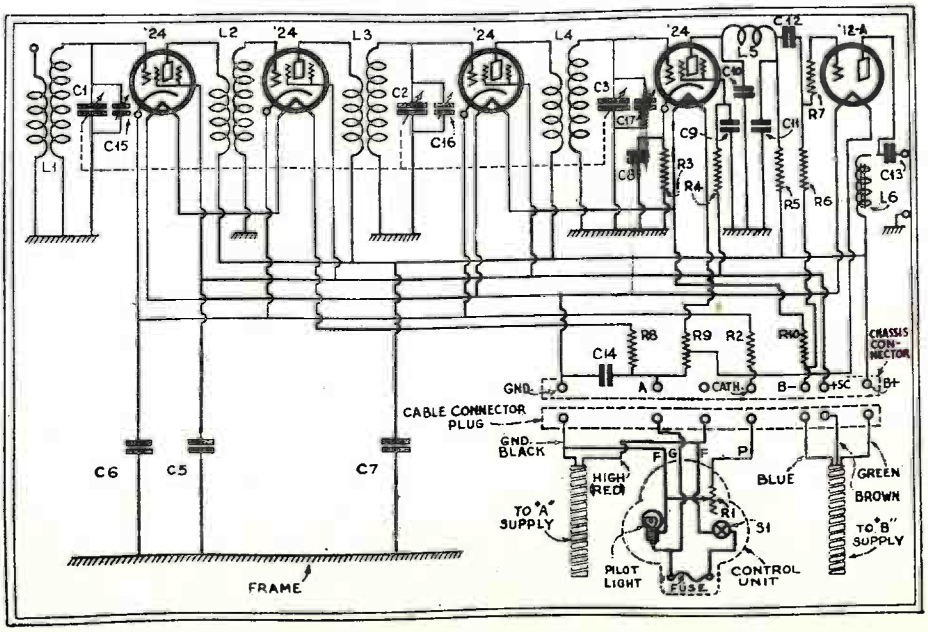

The schematic circuit of the Bosch Motor Car Radio receiver, made by the American Bosch Magneto Corp.; it includes four tuned-input, battery-operated, '24-type screen grid tubes, as R.F. and detector stages, and a single audio output tube, operating the built-on magnetic speaker.

AMRAD CORPORATION

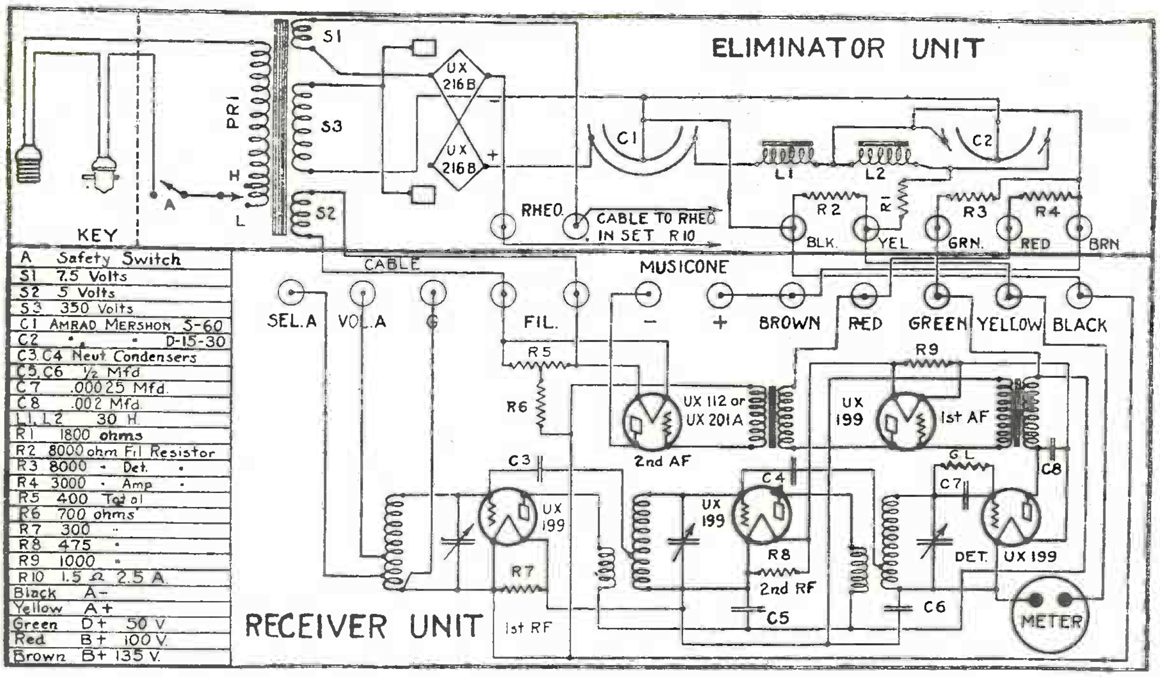

A	Safety Switch
S1	7.5 Volts
S2	5 Volts
S3	350 Volts
C1	AMRAD MERSHON S-60
C2	" " D-15-30
C3.C4	Neut. Condensers
C5.C6	½ Mfd
C7	.00025 Mfd.
C8	.002 Mfd.
L1.L2	30 H.
R1	1800 ohms
R2	8000 ohm Fil Resistor
R3	8000 " Det. "
R4	3000 " Amp "
R5	400 Total
R6	700 ohms
R7	300 "
R8	475 "
R9	1000 "
R10	1.5 Ω 2.5 A.
Black	A–
Yellow	A+
Green	D+ 50 V
Red	B+ 100 V.
Brown	B+ 135 V.

The Schematic Wiring Diagram of The Amrad Neutrodyne Receiver AC-5 Type and Power Unit

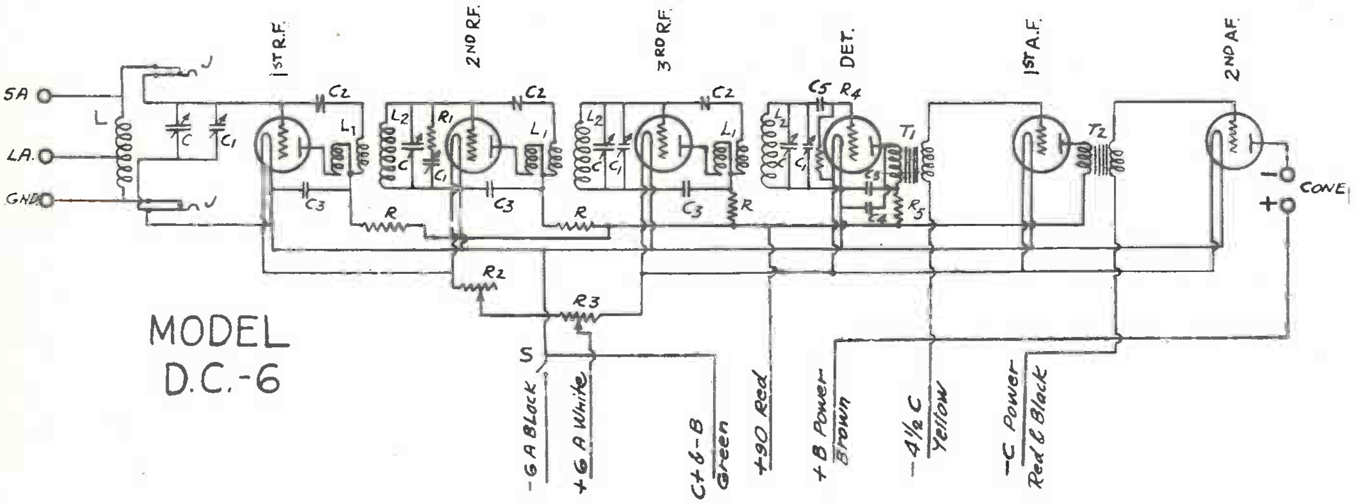

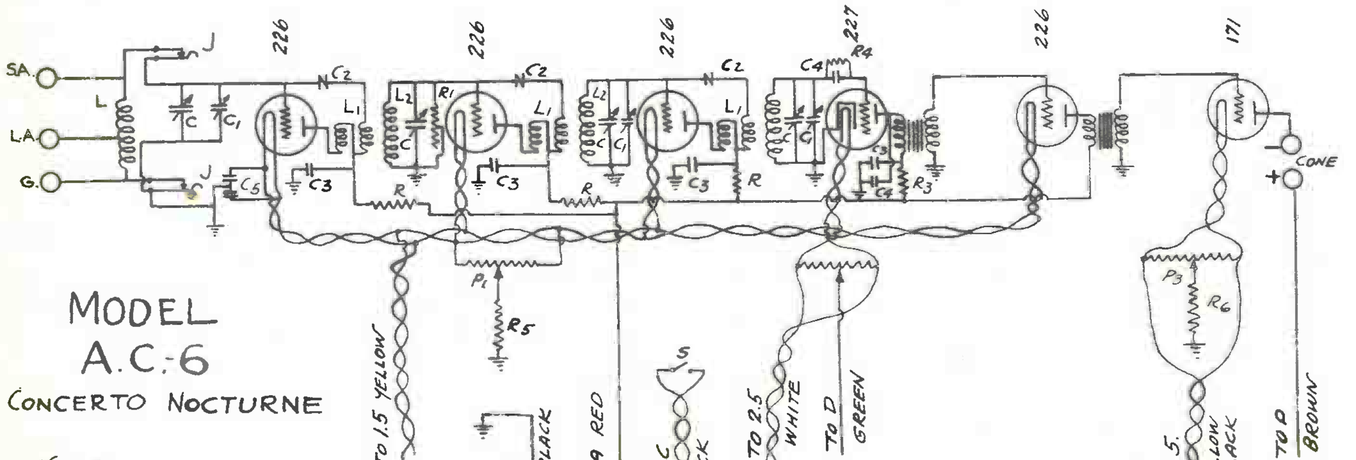

NOTE:-
The Letters and numerals on battery Leads refer to markings on eliminator panels

AMRAD CORPORATION

MODEL D.C.-7

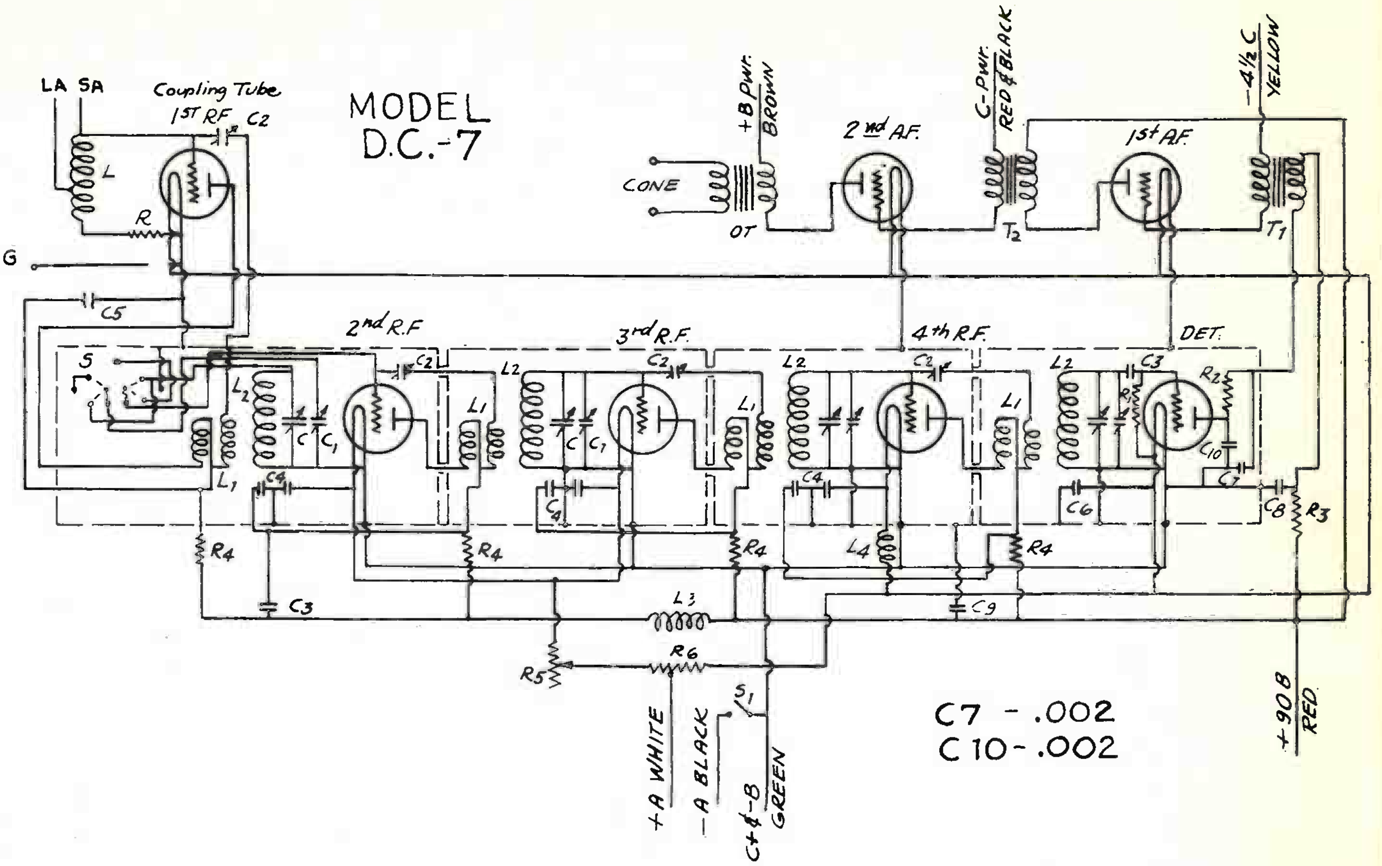

C7 - .002
C10 - .002

MODEL A.C.-7

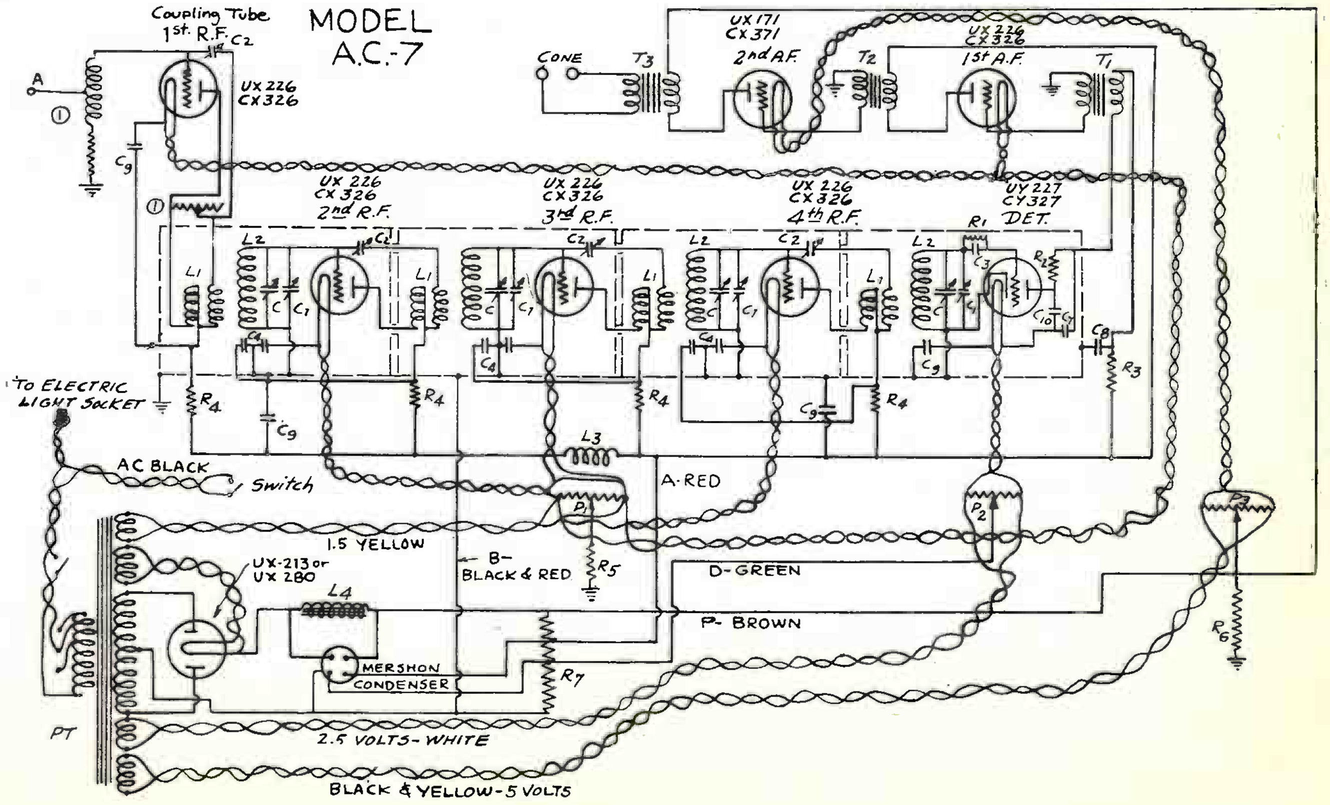

AMRAD CORPORATION

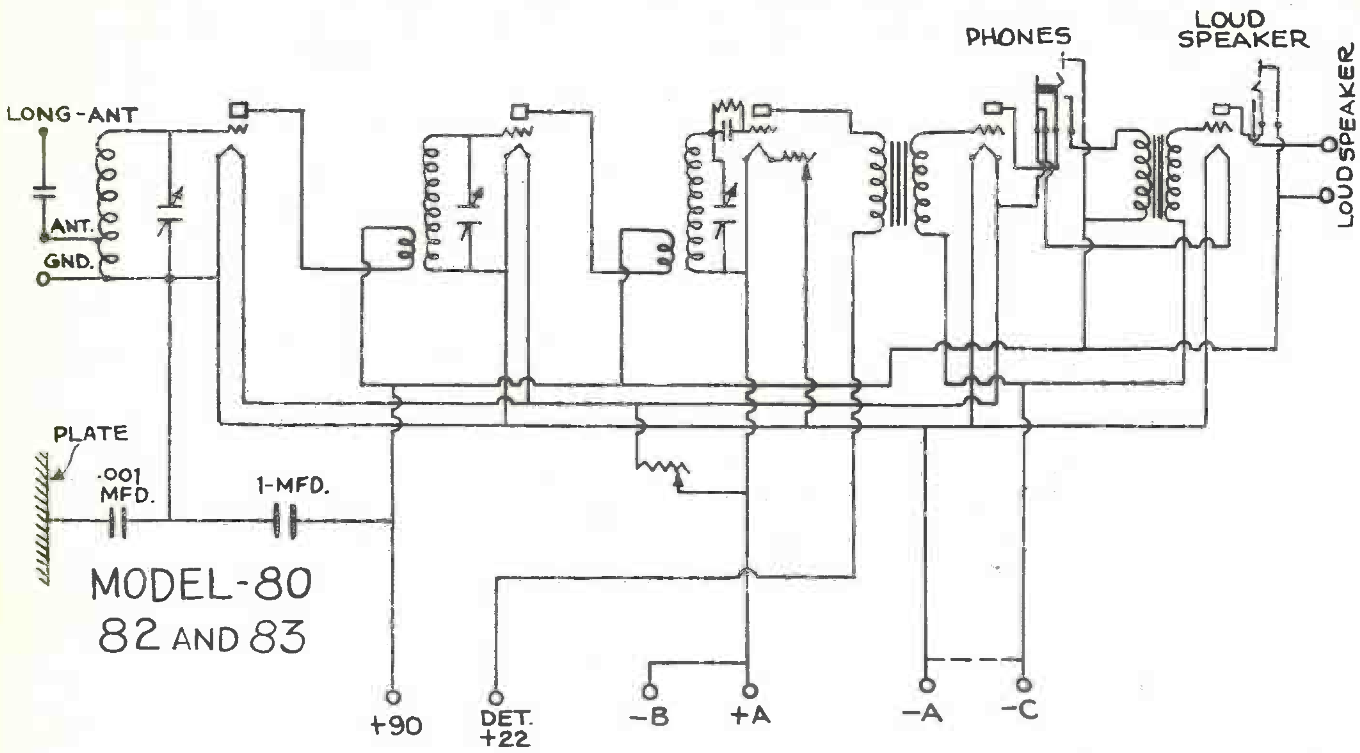

MODEL-80
82 AND 83

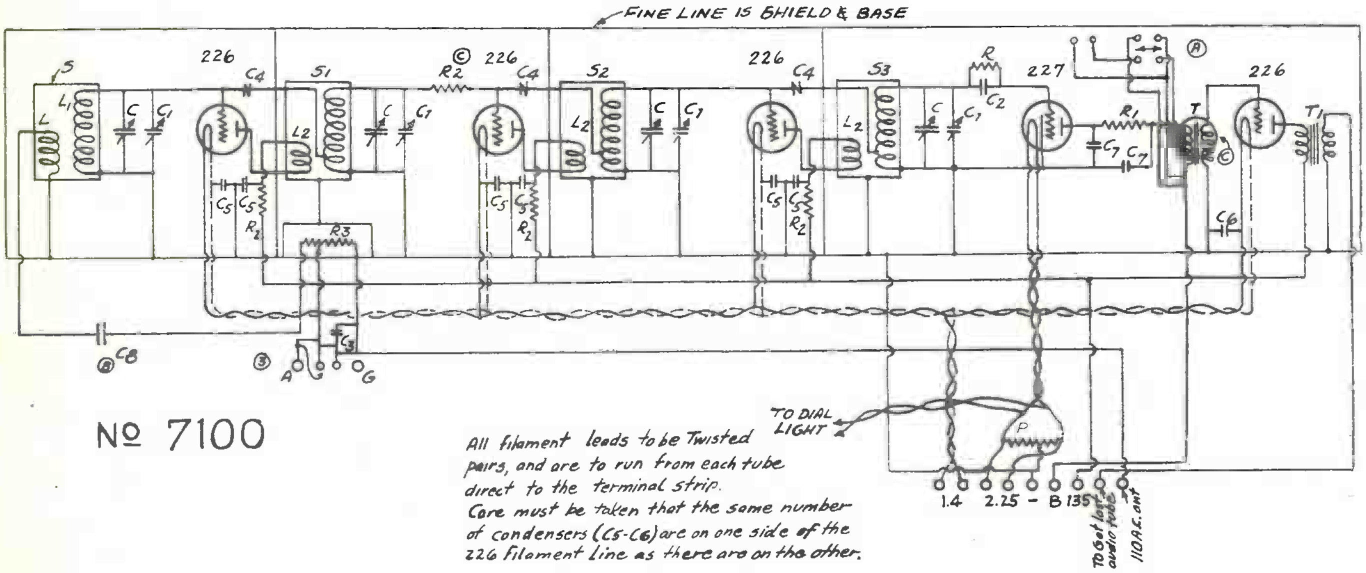

No 7100

All filament leads to be Twisted pairs, and are to run from each tube direct to the terminal strip.
Care must be taken that the same number of condensers (C5-C6) are on one side of the 226 filament line as there are on the other.

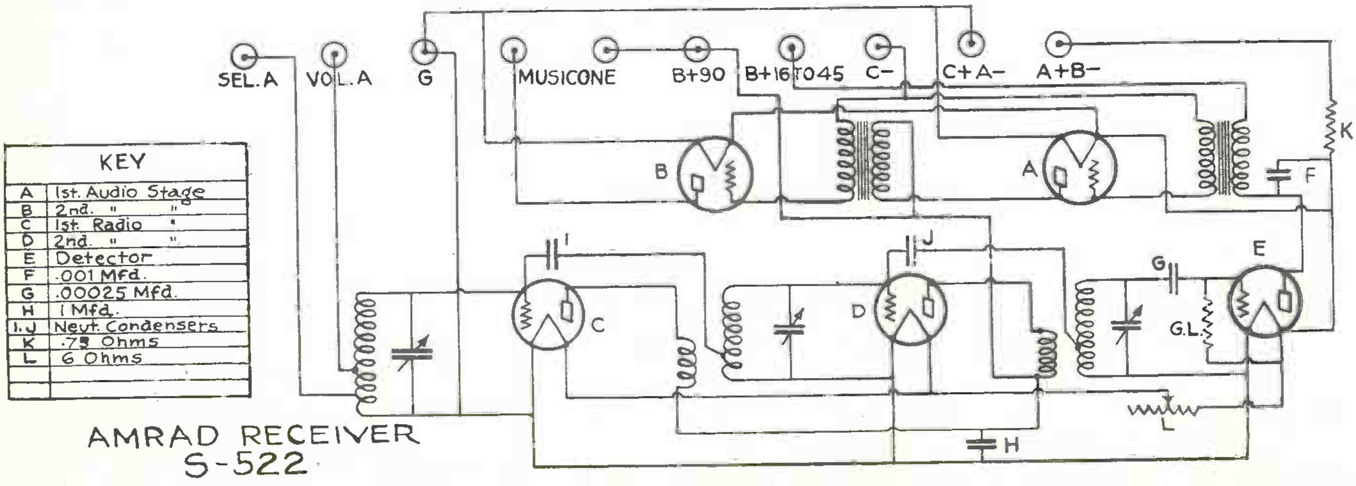

KEY	
A	1st. Audio Stage
B	2nd. " "
C	1st. Radio "
D	2nd. " "
E	Detector
F	.001 Mfd.
G	.00025 Mfd.
H	1 Mfd.
I.J	Neut. Condensers
K	.75 Ohms
L	6 Ohms

AMRAD RECEIVER
S-522

AMRAD CORPORATION

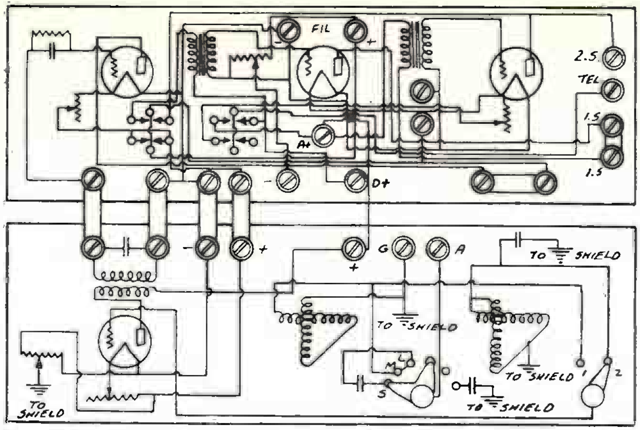

3500-2

SHOWING INTERNAL WIRING OF DETECTOR 2 STAGE AMPLIFIER 2634 AND BROADCAST TUNER 3730 AS VIEWED FROM FRONT OF INSTRUMENTS

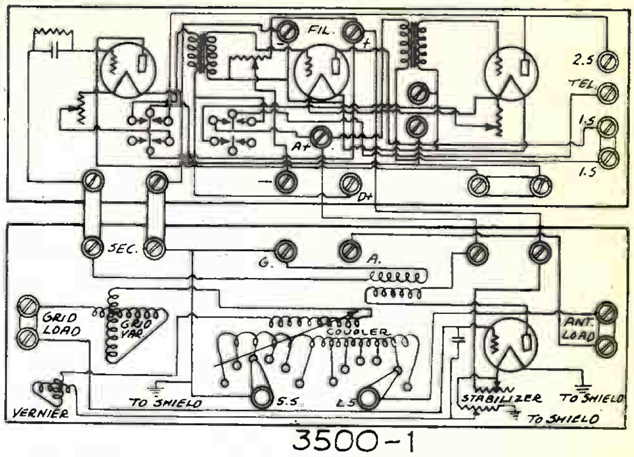

3500-1

SHOWING INTERNAL WIRING OF DETECTOR 2 STAGE AMPLIFIER 2634 & BROADCAST TUNER 3475 AS VIEWED FROM FRONT OF INSTRUMENT

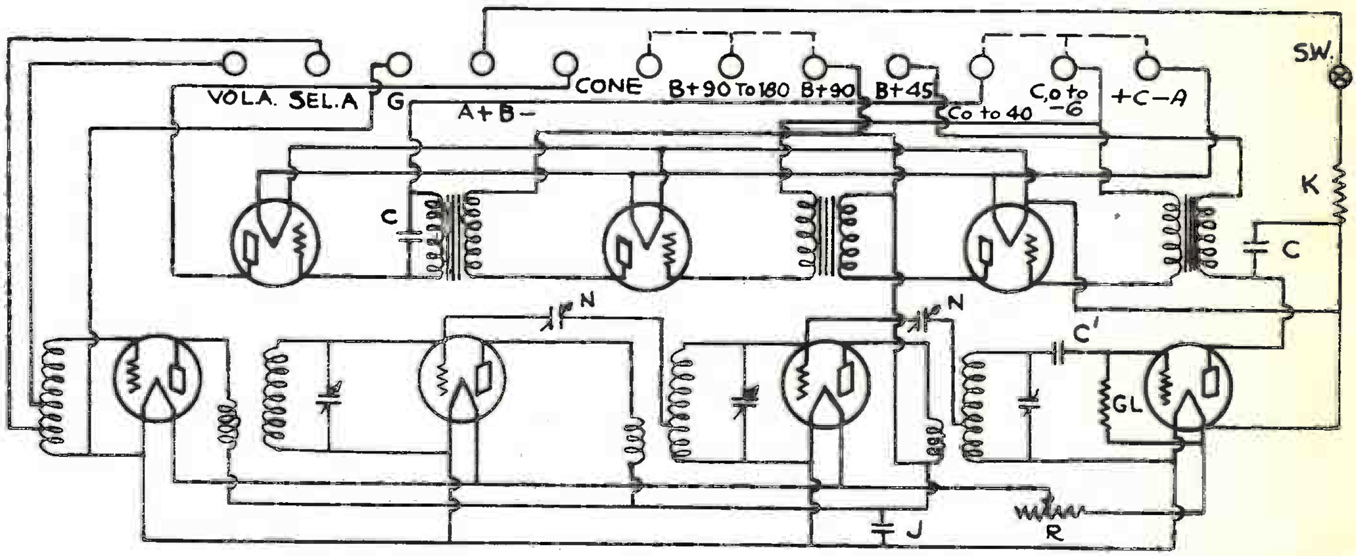

S-733

C − .002 MF. K − 75 Ω R − 6 Ω.
C − .00025 MF J − 1. M F.

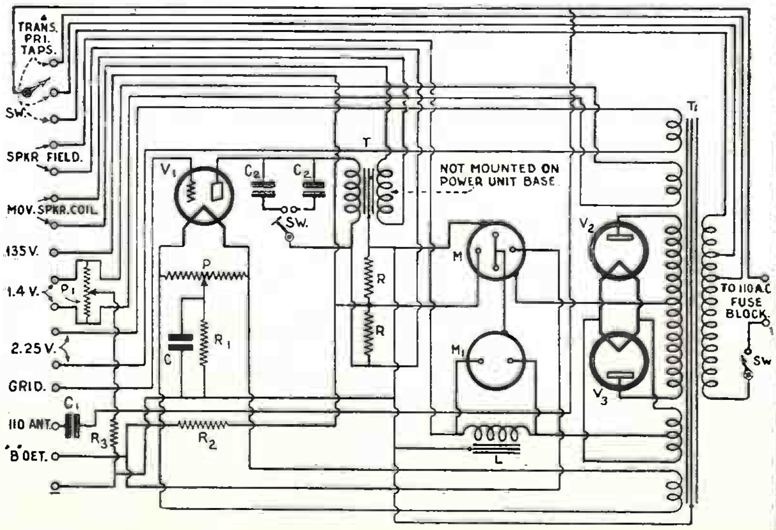

Schematic Circuit of the Amrad Type 7191 Power Unit designed for the Model 7100 receiver The Model 7100 receiver is designed to operate without an outside aerial, the radio frequency pick-up of the light line being sufficient in most localities to bring in the signals of distant stations. Units M and M1 are Mershon electrolytic condensers.

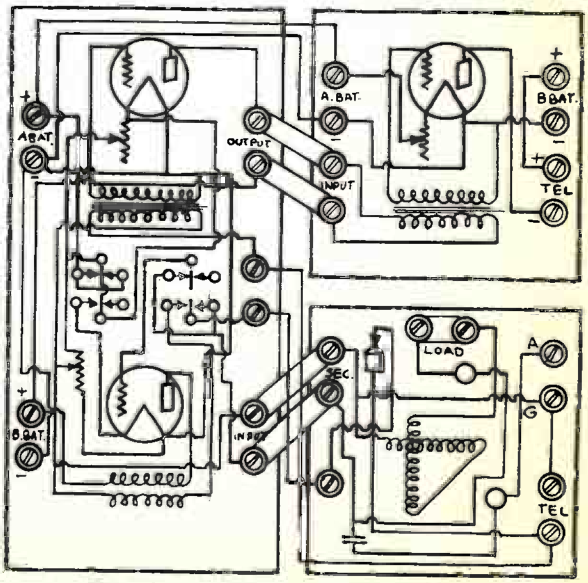

RECEIVER No 3590.

Radio Service Data Sheet

AMRAD MODEL 81 ("BEL CANTO" SERIES) RECEIVER

The tubes required for this receiver are as follows: V1, V2, V3, '24s; V4, V5, '27s; V6, V7, '45s; V8, '80; V9, 2.5-volt bulb.

R1 is the volume control and varies the voltage applied to the screen-grids of V1, V2, V3.

Further constants for this receiver may be obtained from the following list. C1, C2, C3, C4 constitute the four-gang tuning condenser; C5 has a capacity of .00025-mf. C6, C7, C9, C11, C12, are contained in "by-pass block condenser No. 8113" (which may have either lug or wire terminals, connected as shown in the accompanying illustrations), and the values are: C6, C7, C12, 1.0 mf., C9, C11, 0.5-mf. C8 has a capacity of 1.0 mf.; C10, .002-mf.; C13, 0.25-mf. The four units of the electrolytic condenser have the following ratings (the four terminals are the positive leads and the copper case is the common, grounded, negative side of the circuit): M1, 18 mf., M2, 8 mf., M3, 18 mf., M4, 8 mf.

The resistors have the following values: R1, 50,000 ohms; R2, 21,000 ohms; R3, 1.5 megs.; R4, 12,500 ohms; R5, 100,000 ohms; R6, 2,250 ohms; R7, 20 ohms; R8, 200,000 ohms; R9, 5,000 ohms; R10, 60 ohms; R11, 31 ohms; R12, 860 ohms; R13, 1,500 ohms. The resistor cartridges are colored as follows: R2, green; R4, black; R5, yellow; R6, orange; R9, brown; R13, purple.

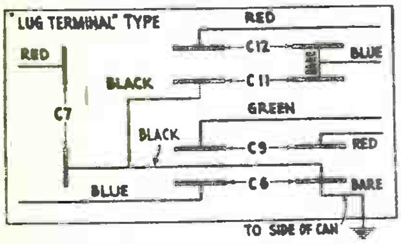

One type of filter-block terminals.

The Model 81 chassis is fused at three amperes. The "antenna compensating control" is the 10-plate variable condenser marked C1A; while the remaining trimming condensers are adjustable, through the shield can, with a screwdriver. Binding posts at the rear of the chassis permit selection of the correct tap on the antenna input inductance L1, for the required degree of selectivity and sensitivity. When the tube is renewed at V4, it will probably be necessary to readjust the setting of R8. If circuit oscillation should appear in the receiver, it may usually be traced to a defective '24 tube, which should be replaced.

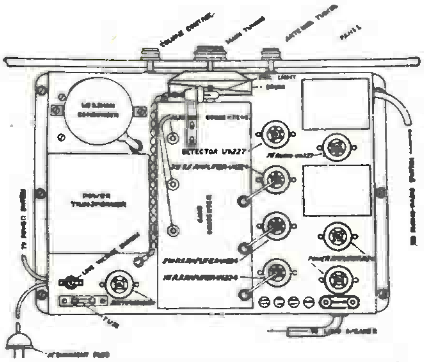

A view looking down on the "81" chassis.

The cord which operates the tuning dial is kept in tension by an adjustment which compensates for stretching; this is regulated hy putting a screwdriver through a hole cut in the edge of the dial drum.

Each of the R.F. transformer primaries (L1, as well as P in L2. L3 and L4) consists of a winding of about 200 turns on a bobbin at the grid end of the secondary; it has a direct-current resistance of about 80 ohms. Ch1 has a resistance of about 100 ohms.

The D.C. resistance values of T1, between ground and the three higher-potential ends, are as follows: to phono tap, 20 ohms; to detector tap, 2,000 ohms; to grid lead, 12,000 ohms. The primary of T2 has a D.C. resistance of 1,600 ohms; the secondary has an over-all resistance value of 10,600 ohms, divided into 4,800 and 5,800 ohms for the grid circuits of V6 and V7. Transformer T3 has a primary D.C. resistance of 190 ohms on one side of the tap, and 220 ohms in the other; the secondary has a D.C. resistance of 0.8-ohm (approx.) to match the voice coil of an RCA "Type 106" dynamic reproducer. The field coil of this instrument has a D.C. resistance of 7000 ohms. As most Service Men know, the voice coil is easily centered by first loosening the center machine screw that clamps the cone-spider to the iron core. (The voice-coil leads of the "106" are marked "B" and the field-coil leads are lettered "C.").

Correct operating conditions for the "Model 81" Amrad are as follows: V1, V2 and V3, plate voltage 180, control-grid bias 1.5, plate current 4 ma.; V4, plate voltage 30 (with tube out of socket, 140 volts), grid bias 0.0, plate current 1.5 ma.; V5, plate voltage 160, plate current 4.1 ma., grid bias 10.5; V6, plate voltage 250, plate current 28 ma., grid voltage 50, filament voltage 2.25; V7, same; V8, plate output 110 ma., filament voltage 4.65. (All the other tubes have a filament voltage of 2.25; at the socket with the tube out, 2:32.) These values were obtained with the set adjusted for a 120-volt line supply, and the volume control full "on." The "C" bias figure of 10.5 volts for V5 will not be obtained unless the hum control R7 is turned to the ground side.

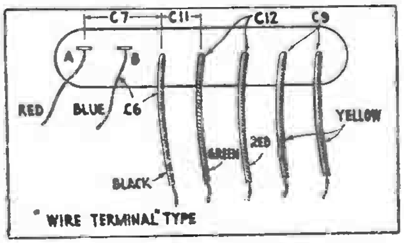

Another form of condenser connections.

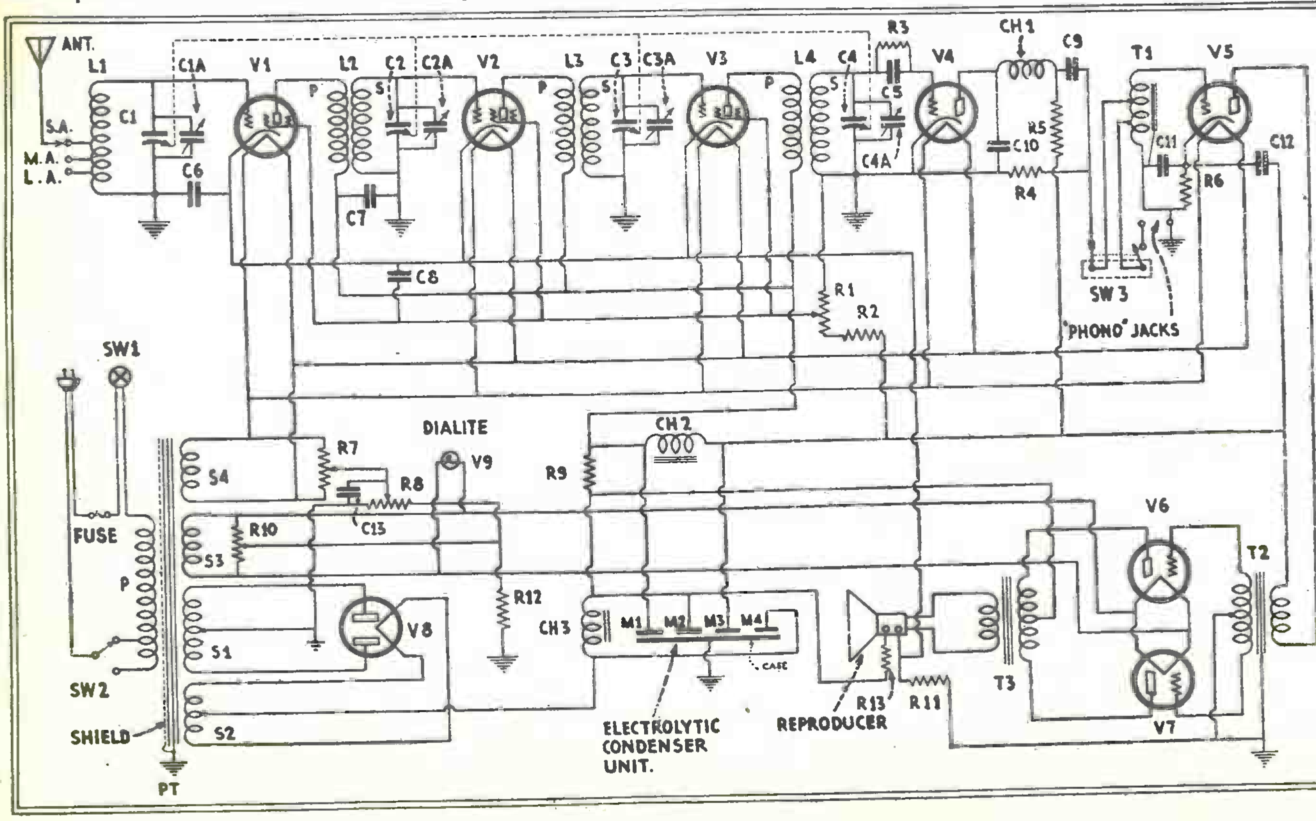

ATWATER KENT

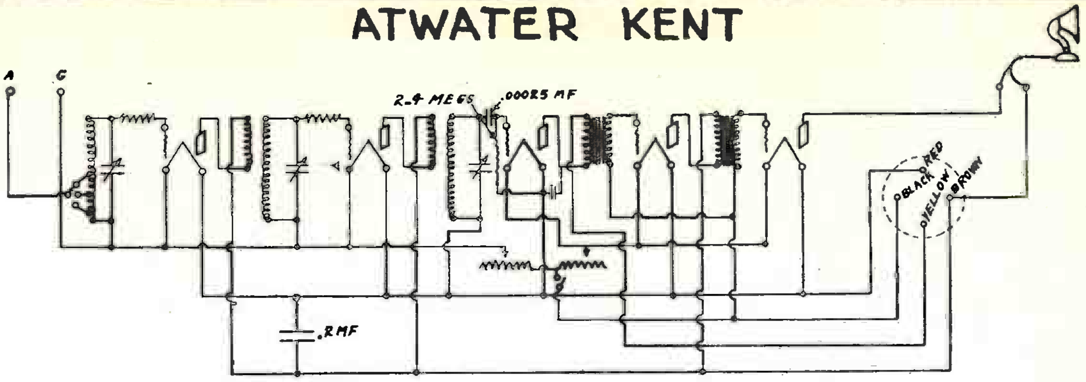

MODEL 10 SET No. 4700.

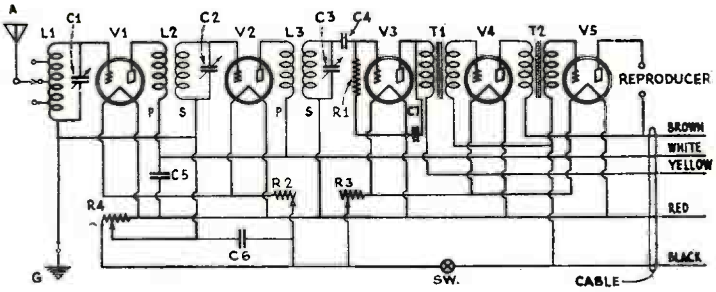

The Atwater Kent "Model 10B," a very early "breadboard" receiver. The circuit is quite simple, and the controls numerous. It is designed for storage-battery tubes, and has potentiometer R.F. control. It may be readily altered to use a power tube.

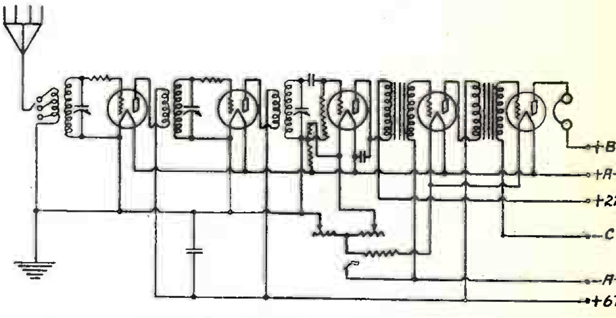

Schematic Wiring Diagram of Model 20 Compact Set.

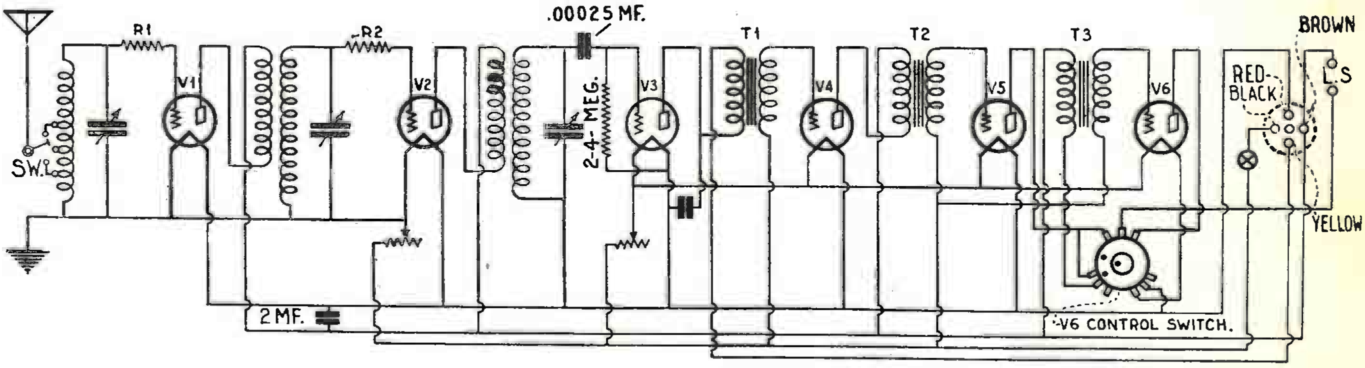

Schematic arrangement of the Atwater Kent Model 12 receiver; this set is popularly referred to as the "breadboard" type of construction. The Model 12 set was one of the very first ones to incorporate "grid suppressors" to prevent circuit oscillation. The most usual complaint by owners of this receiver is that the tubes will not light. A check-up would indicate that one of the rheostats had burned out; because someone in the family had connected one side of the storage battery to ground. This put the full storage-battery current across the rheostat controlling the first two R.F. tubes.

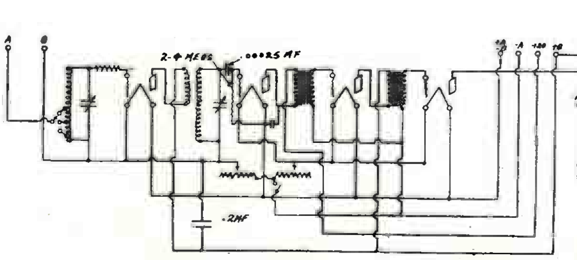

MODEL 19 SET No. 4880.

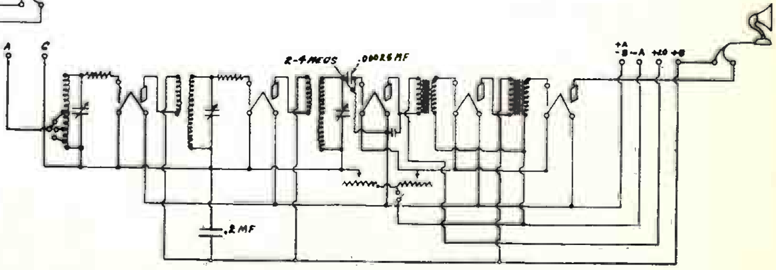

MODEL 20 SET No. 4640.

ATWATER KENT

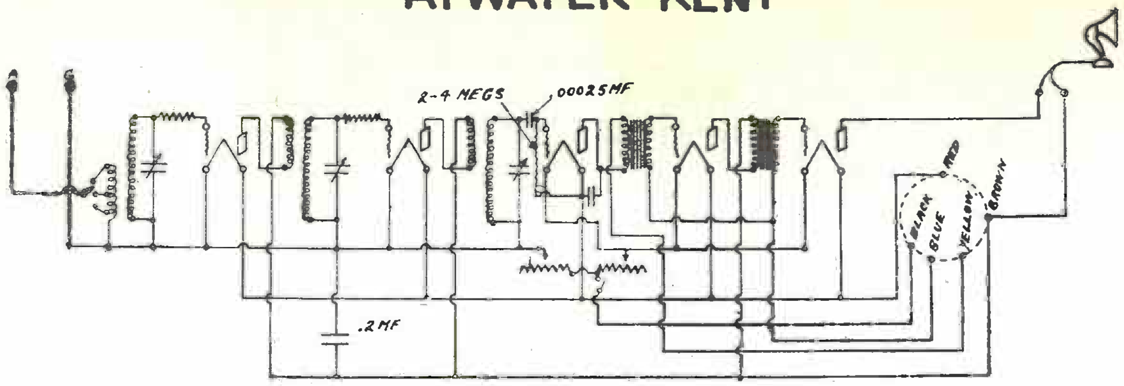

MODEL 21 DRY CELL SET No. 7780.

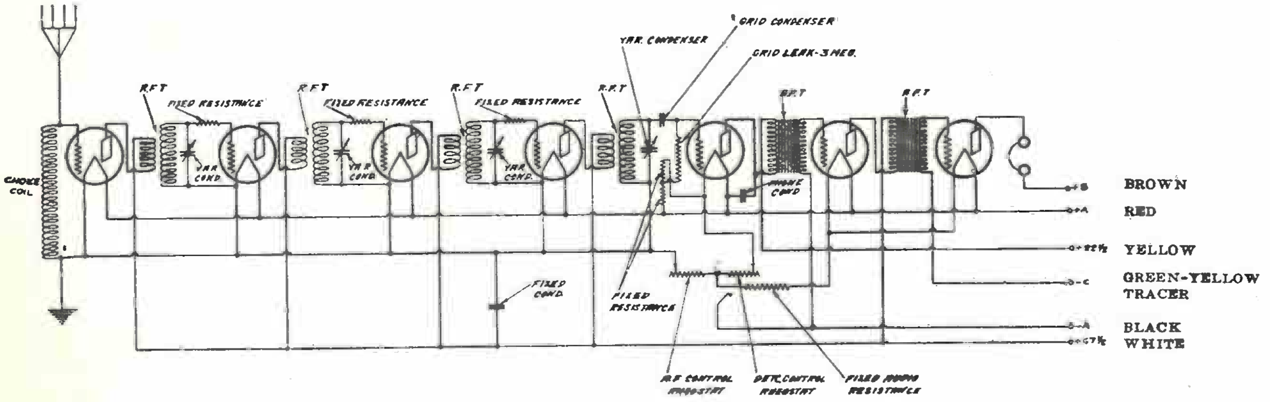

Wiring Diagram of Model 32.

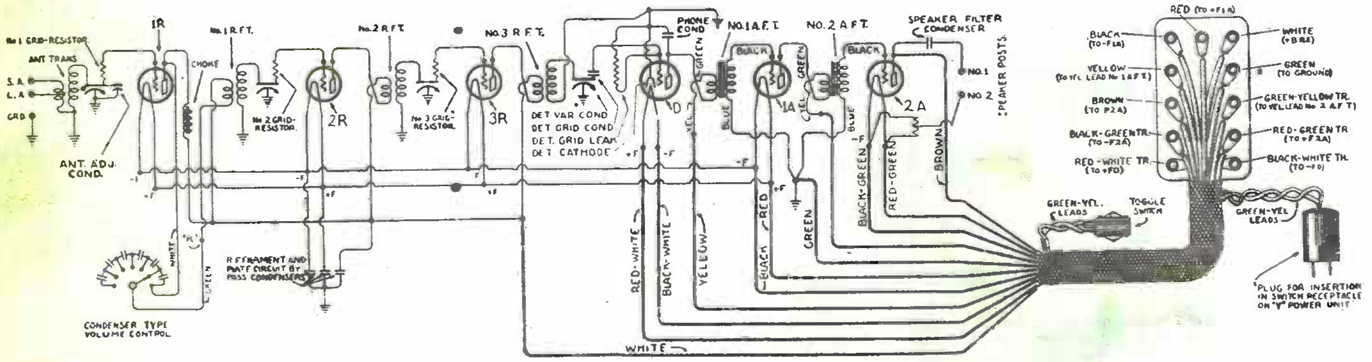

Wiring Diagram of Model 36 With Condenser Type Volume Control and Cable Connection Panel for Early Model "Y" Power Unit. (Note that the +B 1st A.F. cable lead is green with a yellow tracer. In some Model 36 sets, and in all other Atwater Kent A.C. receivers, a black-red tracer is used for this connection.)

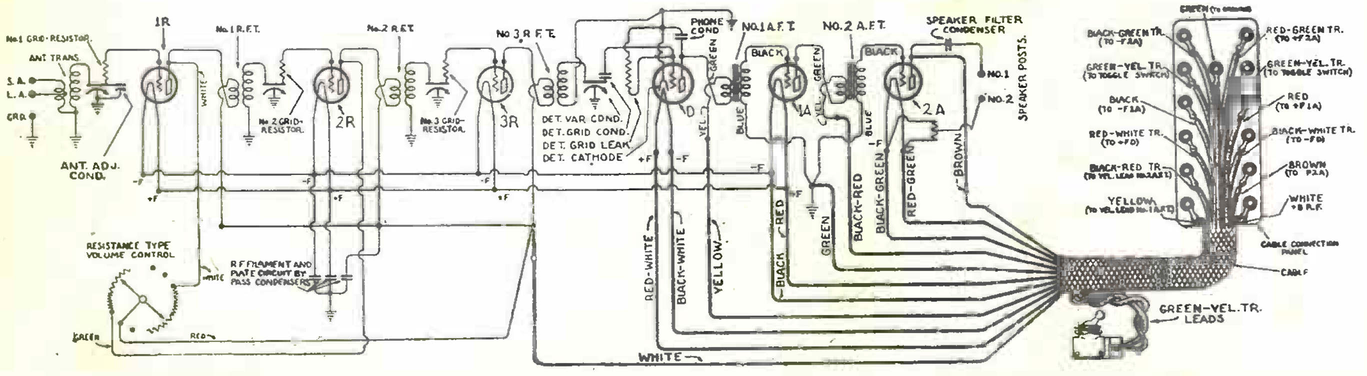

Wiring Diagram of Model 36 With Resistance Type Volume Control and Cable Connection Panel for Later Model "Y" Power Unit. (Note that the red and the black cable leads feed the R.F. filaments as well as the 1st A.F. filament. In some Model 36 sets the +B 1st A.F. cable lead is green with a yellow tracer.)

Radio Service Data Sheet

ATWATER KENT MODELS 30, 33, 35, 48 AND 49

These receivers are six-tube sets of the single-dial, battery-operated type. They are often referred to by their factory catalog numbers, to wit: Model 30, No. 8000; Model 35, No. 8100; Model 48, No. 9840; Model 33, No. 8930; Model 49, No. 9860.

The models 33 and 49 have a tuned input (four tuned circuits); the models 30, 35 and 48 have an untuned input (three tuned circuits). Models 48 and Models 49 are code numbers showing that a gold-finished panel is used. Models 33 and 49 are so wired that R5 limits the current to V5 and V6 only while V4 is controlled by the additional variable resistor Rx. R in the first stage of these two circuits has the same value as equivalent resistors R1 and R2. C is the regular tuning condenser, in shunt to which is the circuit-balancing variable condenser Ca.

The purpose of the untuned antenna input of the 30, 35 and 48, shown in the larger diagram, is to eliminate the detuning effects of aerials of different constants.

If it becomes necessary to change a variable-condenser bank, make certain that the pulleys turn easily on the shafts; if they do not because of a damaged condenser shaft, replace the entire condenser group.

Each belt must be arranged with the eyelets, which clamp the two ends together, at the bottom of the belt loop. Each belt has two small holes; one to fit over a pin on the dial-condenser pulley and the other to fit over the pin on the pulley which is controlled by that belt.

Loosen screws in the outer condensers and move them toward the dial-condenser, so that the belts will fit easily over the pulleys. In moving condensers, hold them by the heavy frame of the stator plates, as this avoids strain on the different parts of the condenser assembly.

To arrange the belts on the 30, 35 and 48, first put on the belt which fits over the *inner* of the two pins on the dial-condenser pulley, and over the pulley of the third (right) condenser. Then, put on the belt that fits over the *outer* of the two pins on the dial-condenser pulley, and over the pulley of the first (left) condenser.

A bit different procedure must be followed in arranging the belts on the 33 and 49. Put on the belt that fits over the *inner* of the two pins on the dial-condenser pulley, and over the third pulley, as the first step. Then, put on the belt that fits over the *inner* of the two pins on dial-condenser pulley (this will bring it on top of the first belt) and continue on over the pulley of the fourth right condenser. The last step is to put on the belt that fits over the outer one of the two pins on the dial condenser pulley and over the pulley of the first or left condenser.

After the belts are in position the next step is to adjust the belt tension. See that the three screws holding the dial-condenser to chassis are tight, and that the three screws in each of the other variable condensers are slightly loosened. Note that the holes through which these latter screws pass are slotted, allowing the condenser to be moved horizontally a fraction of an inch toward or away from the dial condenser. Two pins projecting from the front of the condenser fit into two horizontal slots and serve to keep the condenser properly aligned. It is important to see that the pins of the condenser are not jammed outside but are in the slots. The frame of the metal-frame variable condensers will be found to partly cover a hole (on the side of the condenser nearest to the dial-condenser) that is provided in the front of the chassis and at the edge of each condenser for the purpose of tightening the belts. By inserting the blade of a screwdriver in this hole and twisting the blade, the condenser may be moved away from the dial-condenser; this motion tightens one belt. A little dexterity is required when the correct belt tension has been obtained; for the next step is to keep the condenser in the correct position while, with the right hand, a second screwdriver is used to tighten the three screws that pull the condenser to the chassis. Screws must be pulled up tight as soon as the tension is such that the variable condensers all move at the same instant, forward or backward, when the dial is adjusted, without any slack in the belts.

Following are a few details that relate specifically to the 30, 35 and 48. Adjust right-hand belt first; insert the blade of a screwdriver in the chassis hole at the left-hand edge of the third condenser and twist the blade, slowly. This will force the third condenser toward the right and increase the tension on the belt. When it seems to be at about the right tension, as judged by pressing the belt, tighten the three screws with a second screwdriver.

Special notes in connection with the 33 and 49 are as follows: the dial-condenser and third condenser belt should be adjusted first. Following this is the adjustment of the belt passing over the pulleys of the dial-condenser and fourth condenser. (Tension is tested by pressing down the belt between the third and fourth pulleys.) The left-hand belt is the last to adjust.

As it is necessary, in making certain replacements, to know the general classification of the R.F. inductance group of each model as regards its serial number, these data are included herewith. The identifying washer is found under the nut on the second R.F. transformer mounting; the colors of the washers are as follows: Model 30, 635,001 to 644,351, black; above 644,351, red. Model 35, below 900,000, no washer; 900,001 to 955,700, yellow or amber; above 955,701, gray. Model 33, Unit No. 9220: antenna coil has five leads (one red), L1 has one green lead. L2 has one yellow lead, and L3 has one blue lead.

To reduce inter-stage coupling to a minimum, the three R.F. inductances L1, L2 and L3 in the 30, 35 and 48 are so arranged that the axis of each is at right angles to that of the others. (The R.F. choke Ch is only about ½-in. long and has a negligible field); however, the 33 and 49 incorporate four tuned circuits and, to reduce interstage coupling, the coil design was entirely changed to "binocular" or "astatic" (non-inductive) windings. If, after carefully balancing the variable condensers, it is found that the variable condensers cannot be kept in tuning alignment throughout the tuning range, it is probable that one or more of the R.F. inductances is out of balance; it is then advisable to replace the entire set with a new unit.

The A.F. output of any of these sets may be fed to a Weston "Model 424" thermocouple galvanometer, through an additional, or third, stage of A.F. amplification, to determine the alignment of variable condensers when the A.F. modulated output of an R.F. oscillator is picked up by the set. The oscillator should be coupled to the set to a degree which results in an approximate reading of 50 on the galvanometer, at about 50 on the tuning dial (as each stage is brought into resonance the meter reading will rise, and the oscillator coupling should be reduced to compensate for this.) First, resonate all the circuits for maximum deflection at about 40 on the dial; repeat performance at 80; then drop to 20 on the dial. After the condensers have been locked in position, the meter readings at 20 and 80 should not drop more than 30% below the reading at 40; a lower reading shows either a defective condenser gang or defective R.F. inductance bank. Inspection of both should then enable a decision to be made.

These sets are wired for a power tube in the last A.F. socket except for early types of the 30. To change the wiring of these, determine by continuity test the grid return lead of T2 which connects to the blue lead in the cable. Break this grid return lead, and attach a length of wire sufficient to reach the "C" battery. Then, connect the positive lead of the speaker (black and red, for Atwater Kent models) to the highest "B+" instead of the connction post on the set.

The A.F. transformers have the following color code for the leads: green to plate; yellow to "B" plus; black to grid; blue to "A—" or "C—". T1 has a ratio of 4:1; T2, 2½:1.

Approximate values for the parts used in these radio sets are as follows: C4, 0.5-mf.; C5, 0.00025-mf.; C6, .006-mf.; R1, R2, R3, R, 800 ohms; R4, 20 ohms; R5, 4 ohms; R6, 30 ohms, center-tapped; Rx, 20 ohms.

In the earlier diagrams "A+" is connected to "B—"; in later models, "A—" to "B—." This is purely external, however.

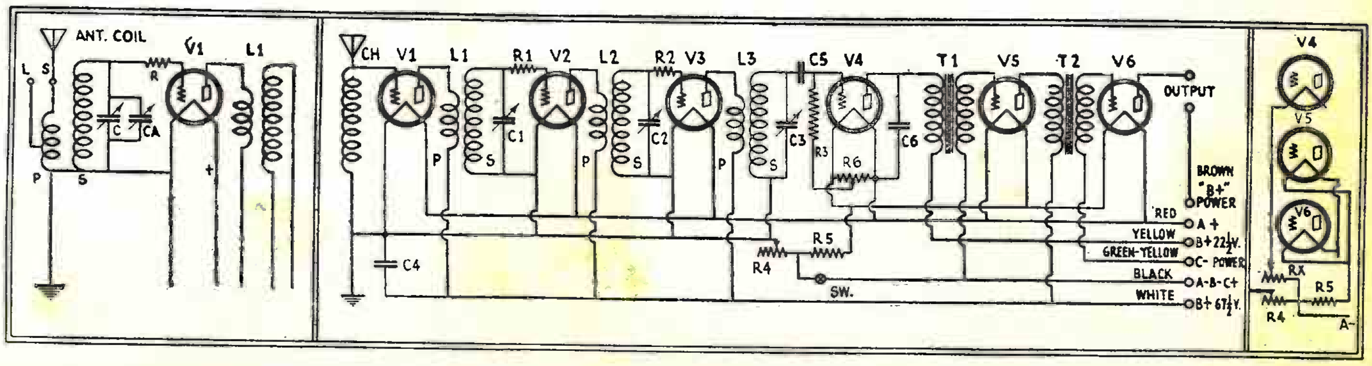

Left panel: R.F. input circuit of "Models 33 and 49"; right panel, their A.F. filament circuit. They are otherwise as shown in the large diagram.

ATWATER KENT

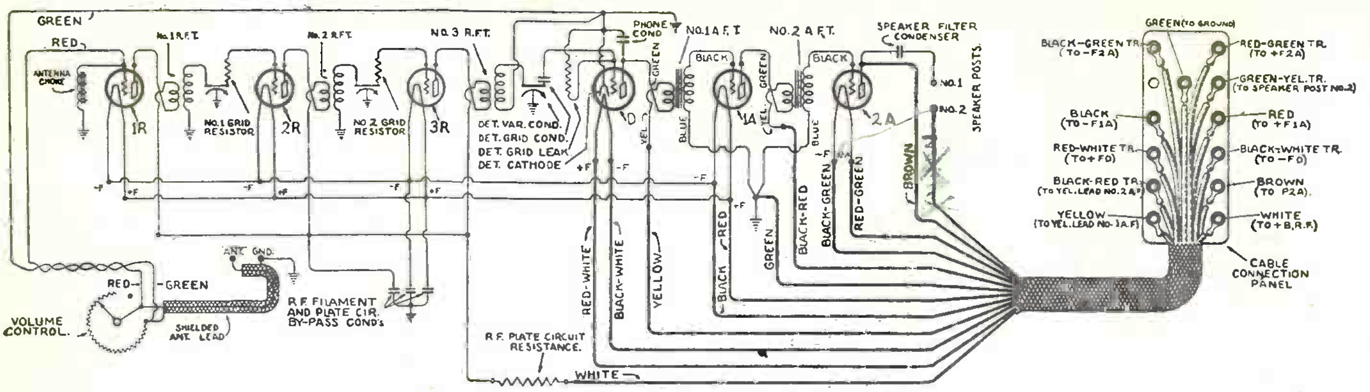

Wiring Diagram of Model 37. (A 2nd A.F. filament shunt resistance is used before Serial No. 1,385,000, in which case speaker post No. 2 connects to the centre-tap of this resistance, and the green-yellow tracer lead is not used. The R.F. plate circuit resistance is used after Serial No. 1,385,000. Note that the red and the black cable leads feed the R.F. filaments as well as the 1st A.F. filament.)

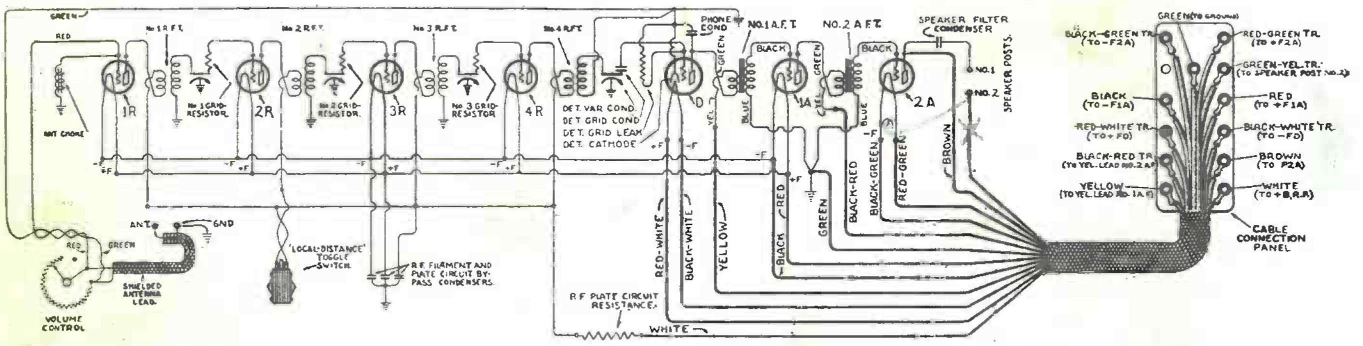

Wiring Diagram of Model 38

A 2nd A. F. filament shunt resistance is used before Serial No. 1,752,000 and the green-yellow tracer cable lead is not used. Connections for this resistance are shown in dotted lines in the diagram on page 71. Note that the black and the red cable leads feed the R. F. filaments as well as the 1st A. F. filament. A schematic diagram of the volume control is shown in Fig. 60.

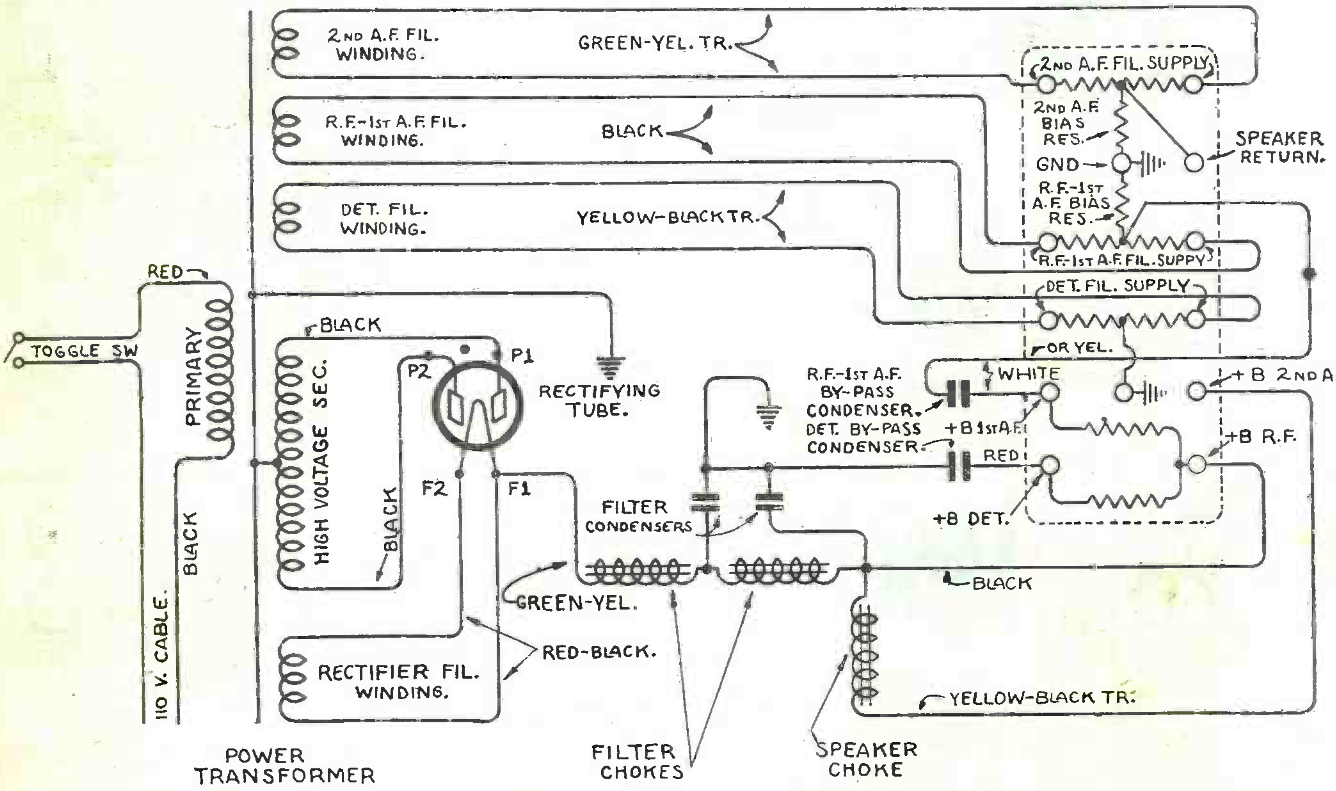

Diagram of Power Unit in Models 37 and 38

The diagram of the power unit in Models 40, 42, 44 and 52 is similar to that shown above with the following exceptions: A regulating resistance is connected in series with the primary circuit in Models 42, 44 and 52. A filter condenser is connected between F1 and ground. The junction point of the bias resistance is connected to the lower instead of the upper ground eyelet. The color scheme is different and is shown in Fig. 77.

ATWATER KENT

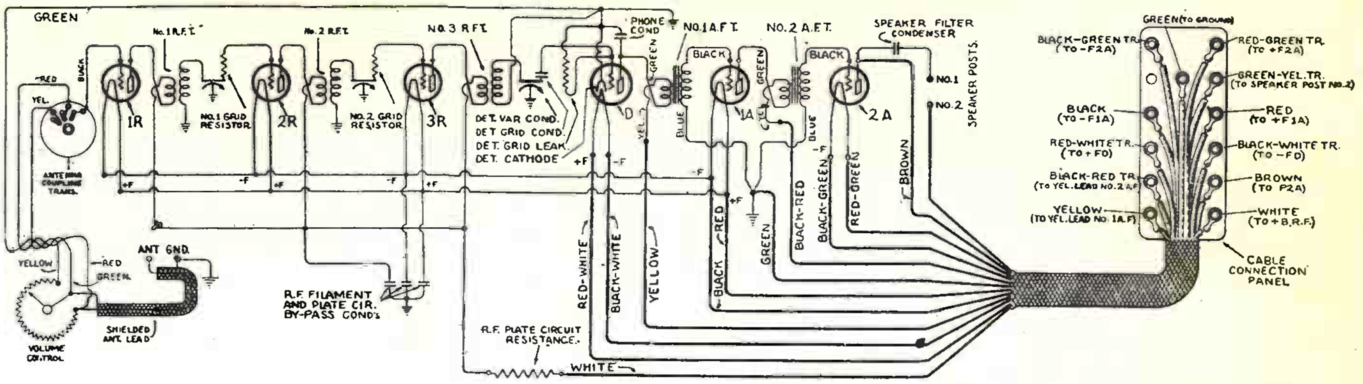

Wiring Diagram of Models 40, 42 and 52

Model 52 does not have the shielded antenna lead, but is provided with two twenty-foot leads which are connected to the volume control, black for antenna and black-green tracer for ground.

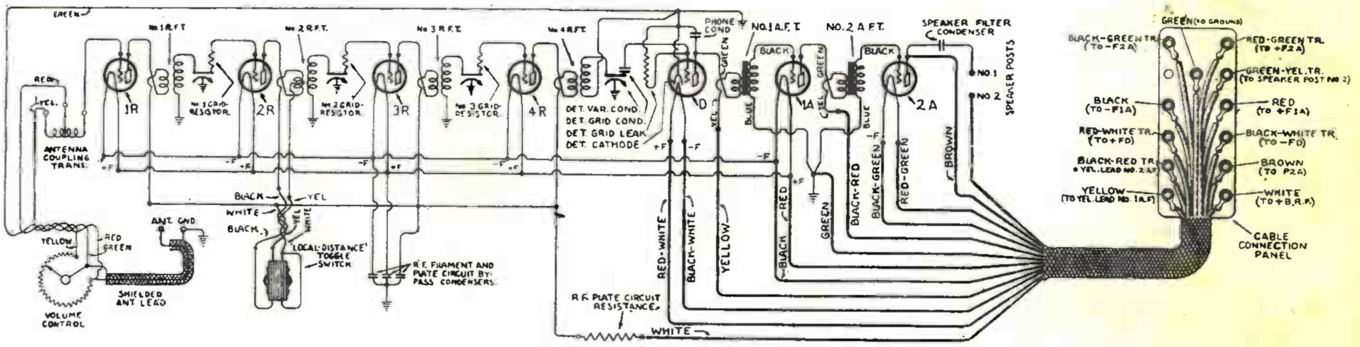

Wiring Diagram of Model 44

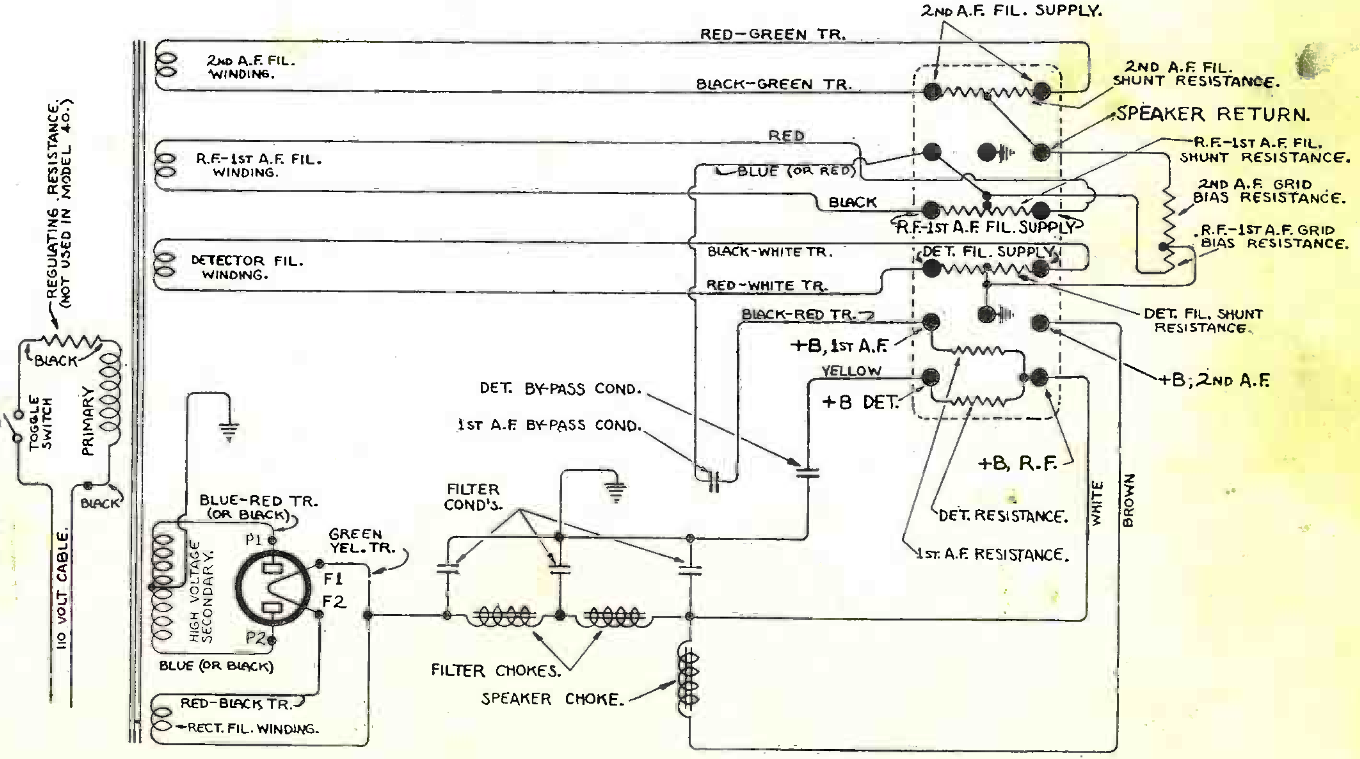

SCHEMATIC DIAGRAM OF POWER UNIT IN MODELS 40, 42, 44, AND 52.
SOME EARLY UNITS OF THIS TYPE HAVE COLOR SCHEME SIMILAR TO UNIT IN MODEL 38 SET.
NOTE THAT COLORS AS NOW STANDARDIZED CORRESPOND WITH THE COLORS OF SET-CABLE LEADS.

ATWATER KENT

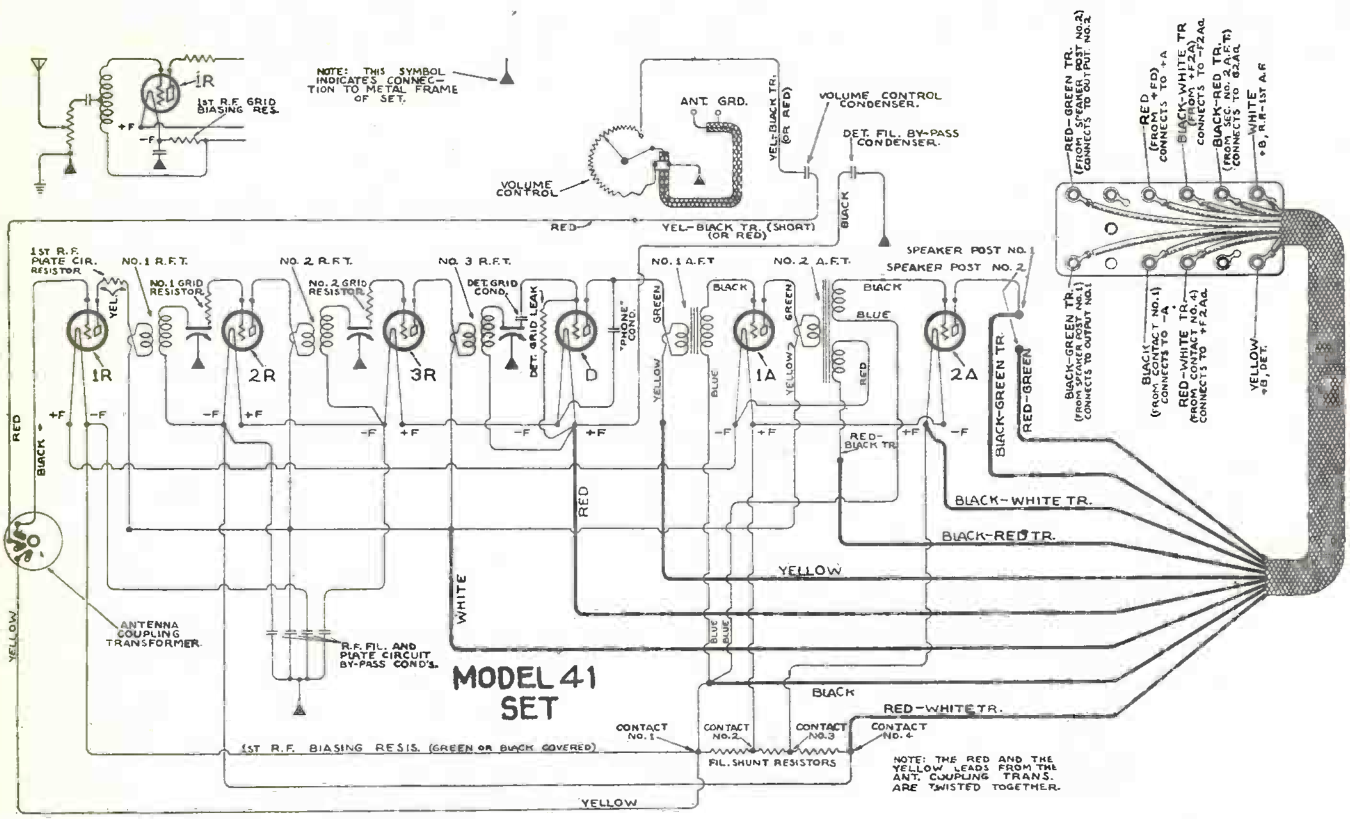

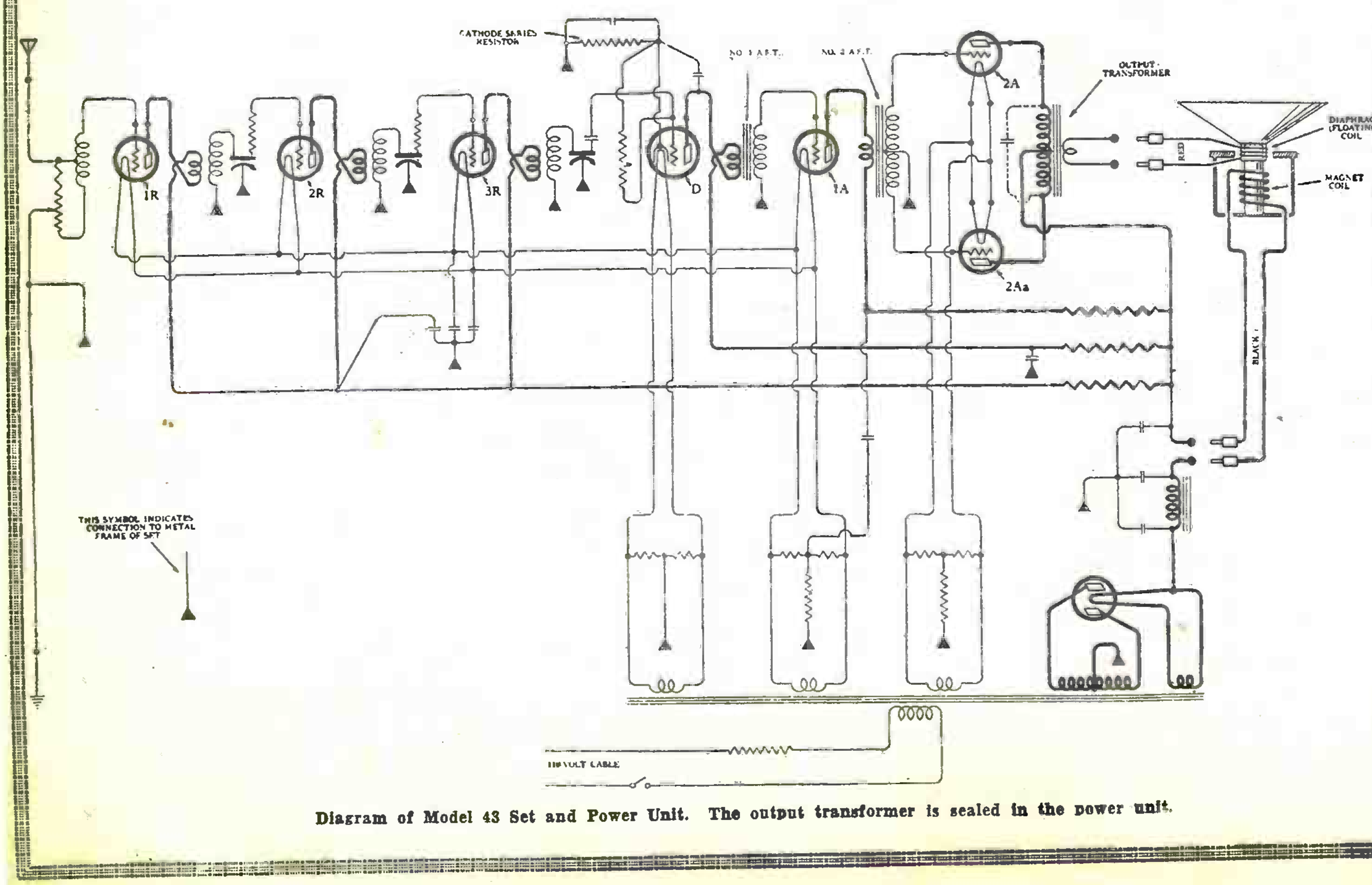

Diagram of Model 43 Set and Power Unit. The output transformer is sealed in the power unit.

ATWATER KENT

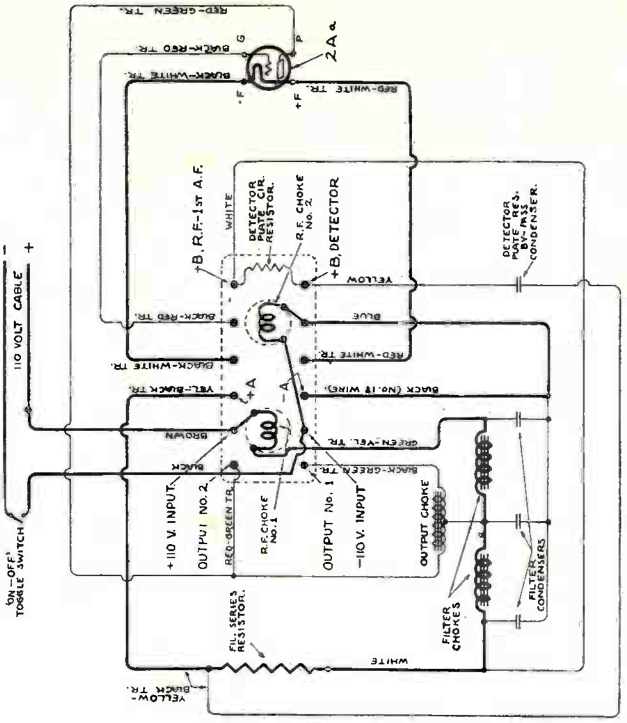

Wiring Diagram of 2nd Type of Power Unit for Model 41.

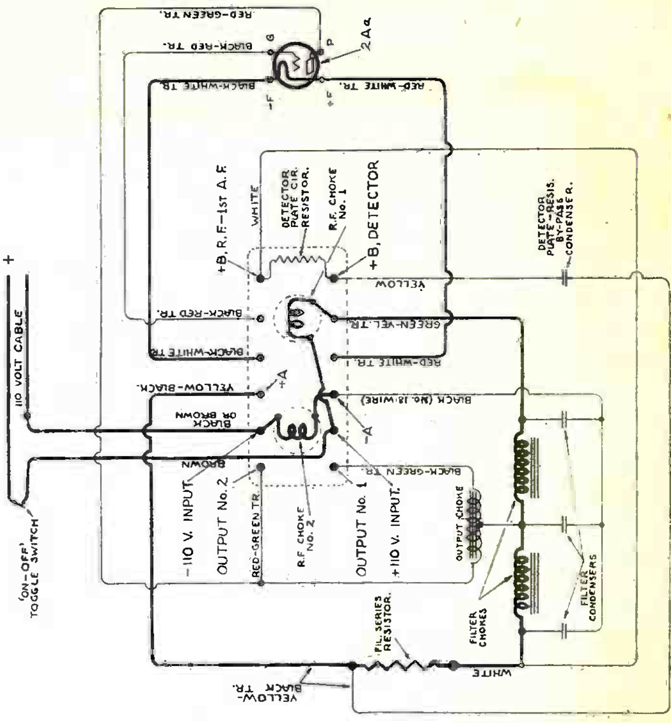

Wiring Diagram of 3rd Type of Power Unit for Model 41.

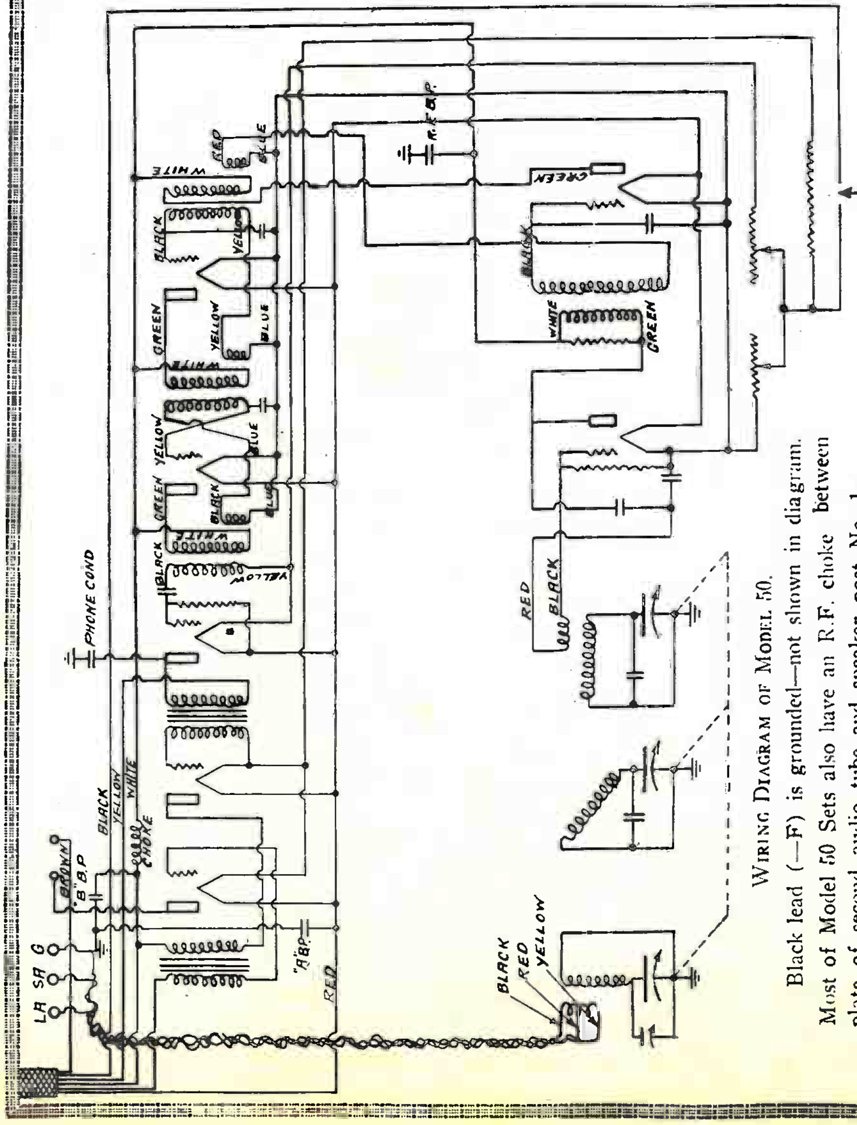

Wiring Diagram of Model 50.

Black lead (—F) is grounded—not shown in diagram.

Most of Model 50 Sets also have an R.F. choke between plate of second audio tube and speaker post No. 1.

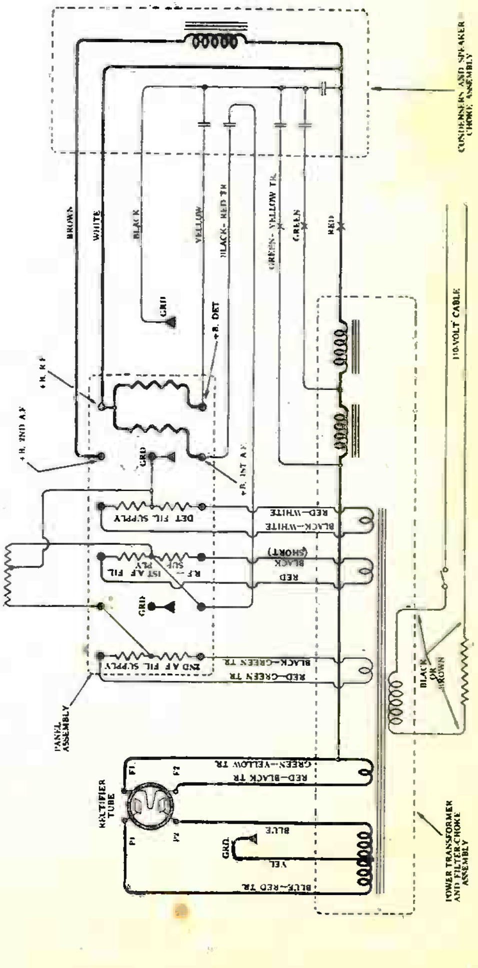

Wiring Diagram of 2nd Type of Power Unit for Model 44

Large

To VC (Brown-Black) Comes about 180 Volts 120 goes to VC Speaker.

V. Coil

To Field

To Condenser (white)

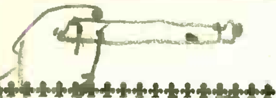

Small is cathode Resistor

Both Cathode 4 Tubes (245) Plus condenser at top.

ATWATER KENT MODEL 55 AND 55 C

The Model 55 receiver is a 6-tube (and rectifier) A.C. outfit representing a distinct departure in design from previous models.

The screen-grid R.F. tubes furnish a high degree of amplification, and as the various units, including the tubes of the R.F. circuits are shielded, the selectivity and sensitivity are excellent. The resistance coupled audio stage assures that signals are passed into the push-pull audio output stage with minimum distortion where they are further greatly amplified with maximum fidelity. Among the other distinct advantages of this type receiver may be mentioned the following: (1) The various units of the power pack are mounted in separate metal containers, simplifying replacement. (2) An illuminated dial graduated in kilocycles makes for easier operation for the customer. (3) The volume control operates by regulating the voltage on the "screen grid" in the R.F. tubes, this voltage being continuously variable from zero to the maximum of about 75 volts. This gives quieter and smoother operation than previous designs which had the control in the antenna circuit. (4) The Model F-4 electro-dynamic speaker which can be used with Model 55 receiver uses for its field supply the entire "B" current supply, same as furnished to plates of all tubes. (5) Tube socket contacts, resistors, and other parts are of new, more rugged and efficient design. (6) The use of heater type tubes in the R.F. stages, detector and first audio stage, and the method of connecting the speaker field coil reduces the A.C. hum to a minimum. There is practically no hum. As in the other Atwater Kent single dial receivers, if one R.F. transformer is defective, the entire group must be replaced. Likewise if one variable condenser is defective, all three condensers must be replaced. It is necessary to remove the R.F. stages, detector and first audio stage, and transformers. Care must be taken to avoid scratching or otherwise injuring the coils when replacing the shields. Also note that a lead from the secondary of each R.F. transformer to the bottom stator-terminal on each variable condenser should pass under a slot at the base of the shield and must not be caught between the shield and the metal baseplate. To aid the installer it is pointed out that the Model 55 is very sensitive and does not require a large antenna. Two antenna posts are provided on the set, marked "Long Antenna" and "Short Antenna." The Long-Antenna post will give greater selectivity and should be used if the aerial is 30 feet or more in length. The Short-Antenna post should be used if a very short (inside) antenna is employed. If extreme selectivity is desired use a short antenna connected to the Long-Antenna post. Indoor aerials for Model 55 should be erected as far as possible away from grounded metal, such as pipes, electric wiring, etc. Ground connection *must* be used with Model 55. This set will also not operate (as some A.C. sets do) with either antenna post connected to the ground. The two A.F. output tubes used in the audio stage should be matched on a tube tester, otherwise the set may hum. Do not use any other model of Atwater Kent speaker with Model 55, than the type F-4 or F-4C. Do not remove speaker plug from socket when set is in operation. The set should be operated with the "Local-Distance" switch in the local position when receiving nearby stations. Failure to do this may result in overloading of the detector tube, which will be evidenced by a decrease of output volume at the resonant point on the tuning dial, as well as a slight ragged type of distortion on strong stations.

VOLTAGE REQUIREMENTS

	Approx. Voltage
Filament	
—F to +F contacts on V1, V2, V3 and V4	2.4 (a)
—F to +F contacts on V5 and V6	2.4 (a)
Filament contacts on V7	4.9 (a)
Plate	
Cathode to plate, V1 (m)	175 (b)
Ditto, V2 (m)	175 (c)
Ditto, V3	105 (d)
Ditto, V4	70 (e)
Filament to plate, V5 and V6	235 (f)
Control Grid	
Cathode to control grid, V1 (m)	3 (g)
Ditto, V2 (m)	3 (h)
Ditto, V3	12 (i)
Ditto, V4	22.5 (j)
Filament to grid, V5 and V6,	42 (k)
Screen Grid	
Cathode to screen grid, V1 and V2 (m)	85 (l)

Additional Test Information

Use high resistance D.C. voltmeter (about 0-50-250) to measure plate and grid voltages; and an A.C. voltmeter to measure filament potentials. Tests made with set in operation, all tubes and speaker plugged in sockets. Tests made in order listed. Low plate or grid voltages may indicate a partially shorted bypass or filter condenser; V3 plate voltage will be low, and V3 grid voltage high, if either of the double "phone" condensers are shorted. (m) denotes volume control set at maximum. NO READING indicates: (a) open filament winding or connection; (b) open high voltage winding, open speaker magnet coil, open filter choke, open primary of 2nd R.F.T., or R5 open; (c) open primary of 3rd R.F.T.; (d) open V3 filter resistor (black) R6, coupling resistor (black) R1, R.F. choke CH, or V3 bias resistor (blue) R7; (e) open V4 filter resistor (gray) R9, primary of TR1, or V4 bias resistor R8 (mounted under maroon and yellow, bias resistors R10 and R11; (f) open TR2 primary; (g) open secondary of 1st R.F.T.; (h) open secondary of 2nd R.F.T.; (i) open secondary of 3rd R.F.T.; (j) open V4 resistor (blue) R2; (k) open V5-V6 bias resistor (yellow) R11, or open secondary of TR1 (if bias resistor R10 is open V3 grid potential will be approximately 85 volts); (l) open connection to slider of volume control R3, open R3, or open bleeder resistor (purple) R4. Make all voltage tests first to get a general idea of the trouble, then disconnect the set and test the suspected parts for opens, shorts and grounds. A condenser, not shown in schematic, by-passes the screen-grids.

The "Local-Distance" switch controls the number of turns in the plate circuit of V1. In later Model 55 receivers, the tubular resistors are made with cast metal caps or contacts, which have a comparatively low melting temperature. Accordingly it is necessary in replacing these units to exercise considerable care when soldering in order not to melt the entire cap. The soldering iron should be held in place only long enough to insure a good electrical connection between the cap and the lug to which it is to be fastened. A few experiences in soldering these new tubular resistors will quickly show the correct method required for good results every time. Whenever a tubular resistor of this type is replaced, the soldered connections should be tested for mechanical strength by endeavoring to push the resistor away from the contact lugs. For continuity testing, all of the socket contacts may be exposed by inverting the set and removing the plate. Separate parts may be tested for continuity with a voltmeter and battery in the usual way. If there is any doubt as to whether a part is shorted, grounded, or open, it is advisable to remove all connecting leads to that part and test it separately. When synchronizing the condensers, connect the oscillator pick-up lead to the Short-Antenna binding post, and place the local-distance switch in the "distance" position. Adjust the volume control to give about half scale reading on the output meter, and then leave the control in this average position. Owing to the design of the R.F. amplifying circuit in Model 55, it is necessary to use a top shielding plate when synchronizing the variable condensers, and in order to make the rotor of No. 1 condenser accessible for adjustment it is necessary to cut or file a hole in the top-shield over the rotor of No. 1 condenser. This hole should be about 1½ inches in diameter, with its center 2¼ inches from the left edge of the shield and about 1⅜ inches from the front edge. The rotor of No. 1 condenser may then be adjusted with one finger through this hole. No. 2 condenser rotor may be adjusted by turning the control knob, and No. 3 rotor may be reached from the right-hand side of the chassis, as will be seen. Connections to the various units may be found by use of the color code: First R.F.T., black to chassis (held under one of coil mounting bolts), blue to stator of variable condenser, green to short-antenna post, red to long-antenna post; second R.F.T., black to chassis (held under one of coil-mounting bolts), blue (with lug) to stator of variable condenser, green to plate of V1, red-white tracer to distance switch, blue (without lug) to distance switch; third R.F.T., black to chassis (held under one of coil mounting bolts), blue (with lug) to stator of variable condenser, green to plate of V2, blue lead (without lug) to grid of V3. Power transformer assembly—rectifier fil. winding, thin leads with black sleeving; primary winding, thick brown leads; V5 and V6 fil. winding—thin leads with black sleeving; fil. winding leads to V1, V2, V3 and V4 are thick leads with black sleeving. Push-pull input and output A.F.T. assembly, (input pri.-black with red tracer and other lead is green) secondary center tap is black while cone grid lead is blue and other is red, the output primary center tap is black with white tracer and the two plate fields are both brown, the secondary leads which connect to the voice coil are both yellow with black tracer. Looking down into the receiver, the parts layout is as follows: Rear left corner, "long antenna" post; to the right, "short antenna"; next, "ground." The four prong receptacle in front of the antenna posts is for the dynamic reproducer; in front of that is the rectifier receptacle. The fully shielded unit in front left corner is the first R.F.T. The socket for V1 is next to the right, followed by the second R.F.T.; V2; third R.F.T.; V3; V4 (front right corner); V5 (next to tube in rear right corner); V6 (rear right corner). Going left along rear we find: the A.F.T. assembly; filter condenser assembly; filter choke assembly; and, next to antenna and ground posts, power transformer assembly.

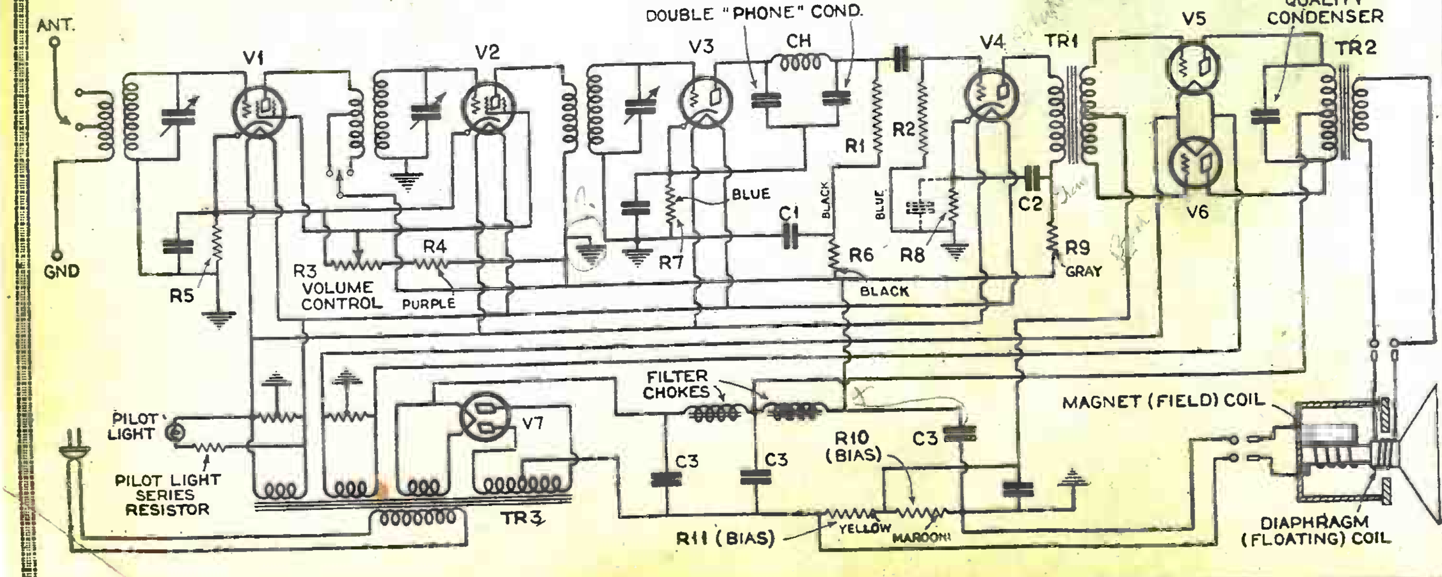

BALKITE PRODUCTS COMPANY

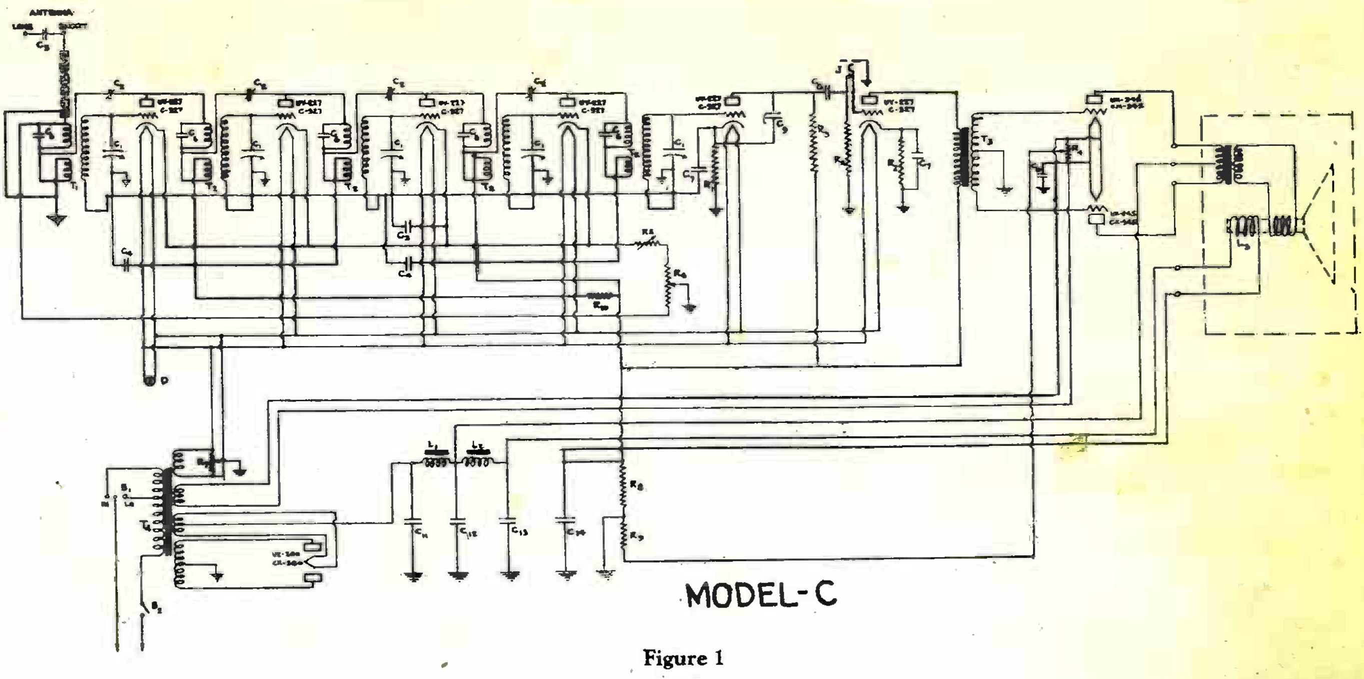

MODEL-C

Figure 1

C-1	Tuning Condenser		
C-2	Neutralizing Condenser		
C-3	R. F. Grid Bias Condenser	.25	MF
C-4	R. F. Plate By-Pass Condenser	.25	MF
C-5	Antenna Condenser	.00025	MF
C-6	Primary By-Pass Condenser	.00025	MF
C-7	Grid Bias Condenser	1.0	MF
C-8	1st Audio Coupling Condenser	0.1	MF
C-9	Detector Plate Condenser	.002	MF
C-10	By-Pass Condenser	.25	MF
C-11	Filter Condenser	2	MF
C-12	Filter Condenser	2	MF
C-13	Filter Condenser	2	MF
C-14	Filter Condenser	1	MF
J	Phonograph Jack		
L-1	Filter Choke		
L-2	Filter Choke		
L-3	Speaker Field		
R-1	Detector Grid Bias Resistance	25,000	Ohms
R-2	1st Audio Grid Bias Resistance	1,750	Ohms
R-3	1st Audio Coupling Resistance	.1	Megohn
R-4	Mid-Tap Resistance	20	Ohms
R-5	R. F. Grid Bias Resistance	2,000	Ohms
R-6	Volume Control	15,000	Ohms
R-7	Hum Control	20	Ohms
R-8	Loss Current Resistance	3,600	Ohms
R-9	245 Grid Bias Resistance	770	Ohms
R-10	R. F. Plate Rsistance		
R-11	1st Audio Grid Resistance	.5	Megohn
T-1	Antenna Transformer		
T-2	R. F. Interstage Transformer		
T-3	Input Push-Pull Transformer		
T-4	Power Transformer		
B-1	HI-LO S.P.D.T. Toggle Switch		
B-2	S.P.S.T. Toggle Switch		
D	Dial Lamp		

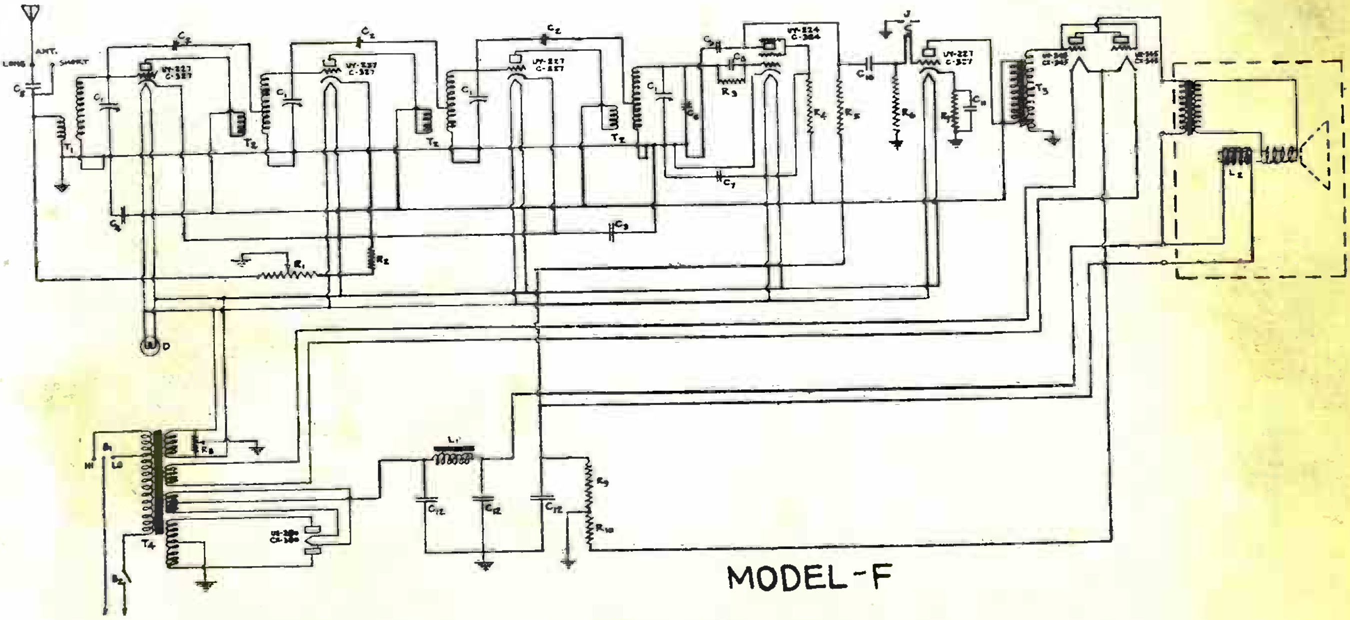

MODEL-F

Figure 1

C_1 Tuning Condenser.
C_2 Neutralizing Condenser.
C_3 R.F. Grid Bias Condenser .25 MF.
C_4 R.F. Plate By-Pass Condenser .25 MF.
C_5 Antenna Condenser .00025 MF.
C_6 Det. Padding Condenser.
C_7 Det. Screen Grid Bias Condenser .25 MF.
C_8 Det. Control Grid Condenser .0001 MF.
C_9 Det. Plate Condenser .0005 MF.
C_{10} 1st Audio Coupling Condenser 0.1 MF.
C_{11} 1st Audio Grid Condenser 0.5 MF.
C_{12} Filter Condensers 8.0 MF Each
L_1 Filter Choke.
L_2 Speaker Field 2500 Ohms.
J Phonograph Jack.
D Dial Lamp.
R_1 Volume Control 15,000 Ohms.
R_2 R.F. Grid Bias Resistance 620 Ohms.
R_3 Det. Control Grid Resistance .5 Megohm.
R_4 Det. Screen Grid Resistance .5 Megohm.
R_5 1st Audio Coupling Resistance .1 Megohm.
R_6 1st Audio Grid Resistance .5 Megohm.
R_7 1st Audio Grid Bias Resistance 1750 Ohms.
R_8 Hum Control 20 Ohms.
R_9 Loss Current Resistance 4500 Ohms.
R_{10} 245 Grid Bias Resistance 650 Ohms.
T_1 Antenna Transformer.
T_2 R.F. Inter stage Transformer.
T_3 Input Audio Transformer.
T_4 Power Transformer.
B_1 Hi-Lo S.P.D.T. Toggle Switch.
B_2 S.P.S.T. Toggle Switch.

BREMER-TULLY MFG. CO.

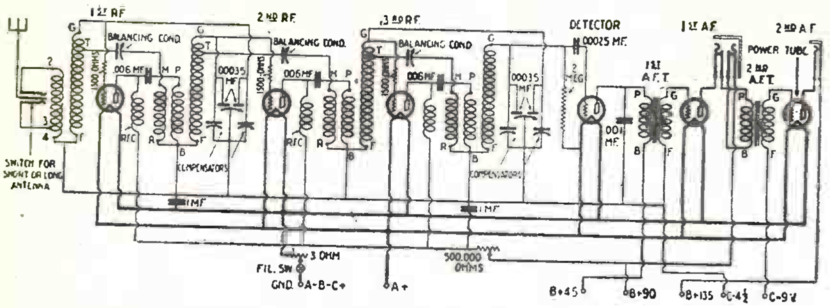

The B. T. Counterphase circuit using six tubes; three stages of R. F. amplification, detector and two stages of A. F. amplification.

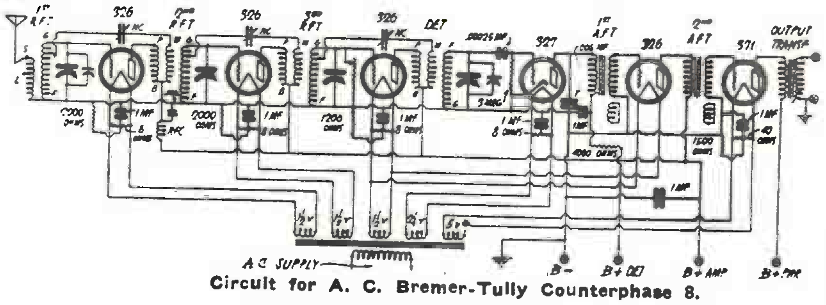

Circuit for A. C. Bremer-Tully Counterphase 8.

B-T 6-40 Power Converter

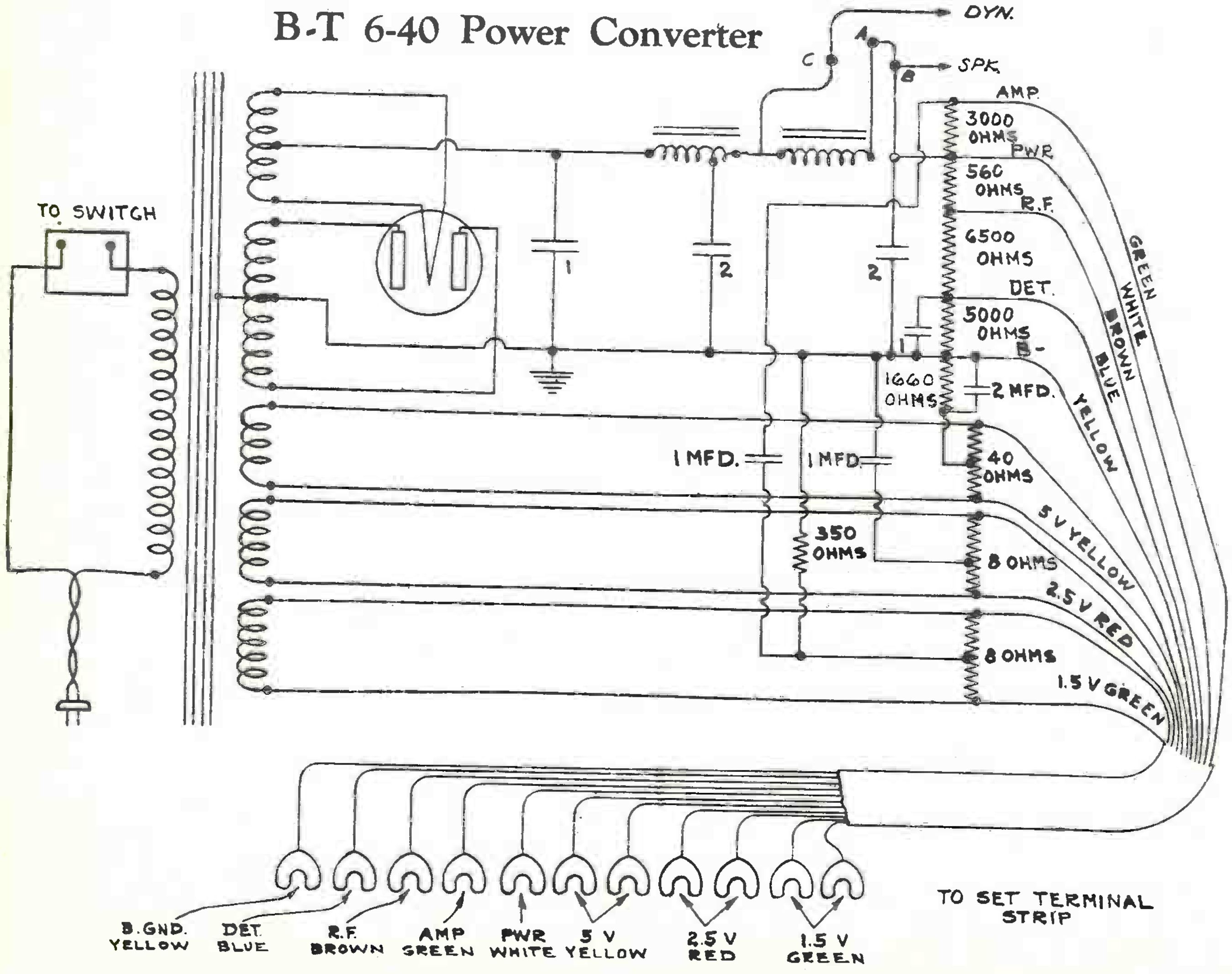

BREMER-TULLY MFG. CO.

B-T 6-40 Circuit Diagram

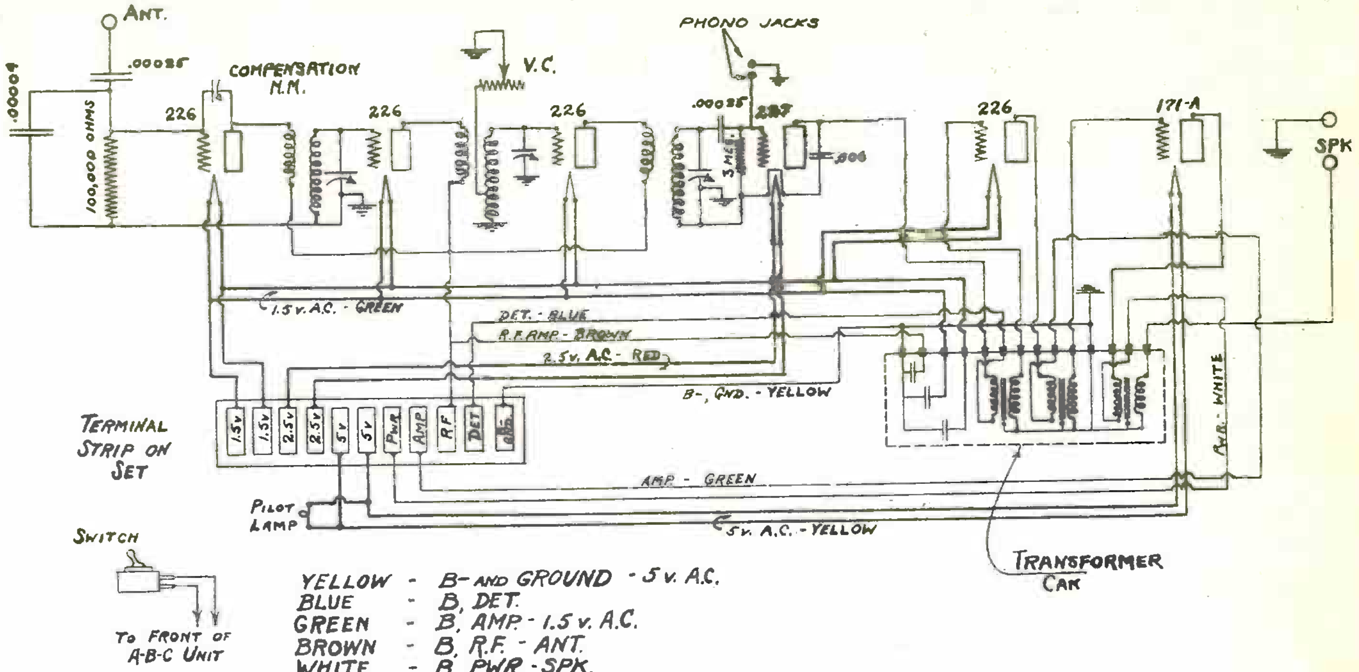

YELLOW	- B- AND GROUND - 5 v. A.C.
BLUE	- B, DET.
GREEN	- B, AMP. - 1.5 v. A.C.
BROWN	- B, R.F. - ANT.
WHITE	- B, PWR - SPK.
RED	- PLATE LEADS - 2.5 v. A.C.
BLACK	- GRID LEADS

B.T. 8-20-A

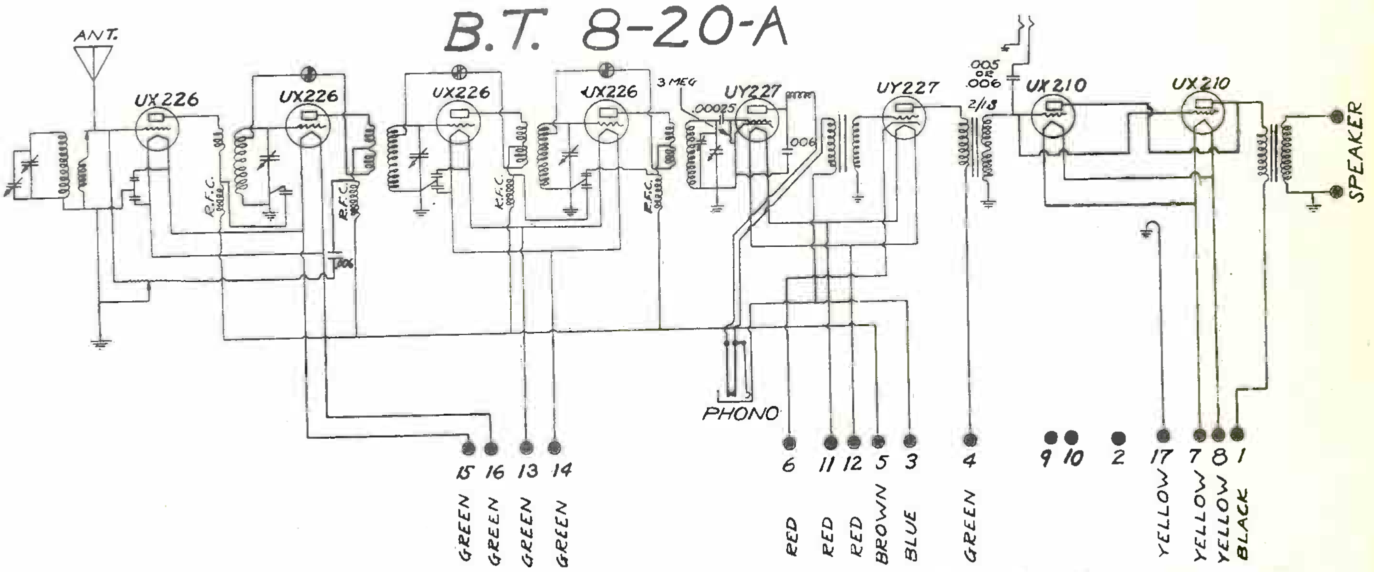

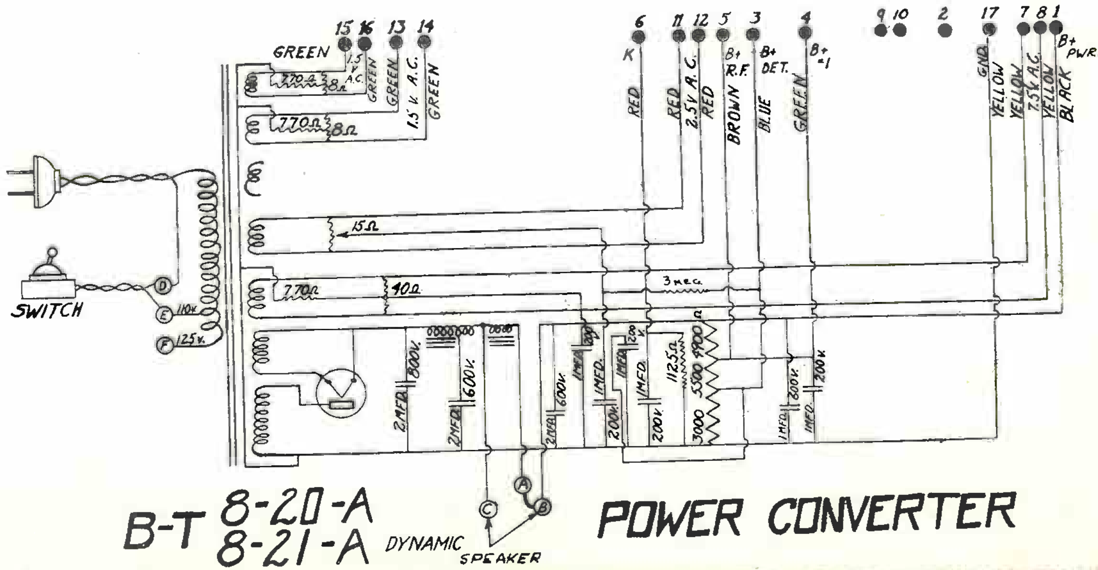

B-T 8-20-A 8-21-A POWER CONVERTER

Radio Service Data Sheet

BREMER-TULLY MODEL 7-70 AND 7-71

This receiver includes three stages of tuned radio-frequency amplification, neutralized in the "Counterphase" manner. To test this part of the circuit, a continuity tester is used to check the connections which include, (in the circuit V1, for example), L2N, C5, and a few turns at the grid end of L1S. The "micro-mikes" or neutralizing condensers C5, C6 and C7 are located at the right of the respective tube sockets. The procedure of balancing a receiver using the Counterphase neutralizing method will be described. Usually it is convenient to use a vacuum tube with one of the filament prongs shortened so that the filament circuit is open when the grid, plate and *one side* of the filament are making contact. Now, tune in a loud signal, adjusting all tuning controls very carefully for exact resonance. Replace V3 with the special tube. (Always start with the R.F. stage next to the detector). Retune all controls until maximum volume is obtained. The "micro-mikes" are now adjusted. The best tool for this purpose is a piece of bakelite rod which has been shaped to a screw-driver edge. The correct position for the "micro-mike" of any stage is *between* the point where the signal disappears and that where it is again heard. Now, replace the dummy tube by V3, retune set carefully, and proceed to the next stage; working toward the aerial. "Micro-mikes" C5, C6 and C7 are located underneath the chassis, directly beneath the holes in the aluminum plates or shields. Condensers C1A and C8 are circuit balancers; C8 is another "micro-mike" adjusted (for maximum volume) with the insulated screw-driver. C1A is operated from the panel as a "sensitivity" control.

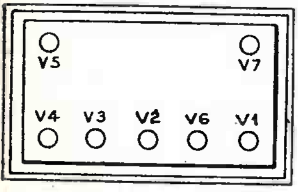

Tube layout of the B-T "7-70" and "7-71."

This receiver is designed to operate at a line potential of 115 volts, and the resulting tube voltages at this line value are given in a table below. If the line potential is below 100 volts, the power pack will not function properly and hum will result; the plate reading of V1, V2 and V3 will be about 135 volts.

The electrical values of the units in this receiver are listed below:

Resistors R2 and R3, 40 ohms; R4, 8 ohms; R5, 770 ohms; R6, 4,000 ohms; R7, 1,700 ohms; R8, 34,100 ohms; R9, 1,125 ohms; R10, 3 meg.; R11, 1,540 ohms. Condenser C9, 0.25-mf.; C10, 0.25-mf.; C11, 0.5-mf.; C12, .006-mf.; C13, 0.5-mf.; C14, .00025-mf.; C15, .003-mf.; C16, .01-mf.; C17, .00025-mf.; C18, 1 mf., (400 V.); C19, 2 mf., (400 V.); C20, 2 mf., (400 V.); C21, 1 mf., (160 V.); C22 1 mf., (400 V.); C23, 1 mf., (400 V.); C24, 1 mf., (400V.); C25, .00025-mf.

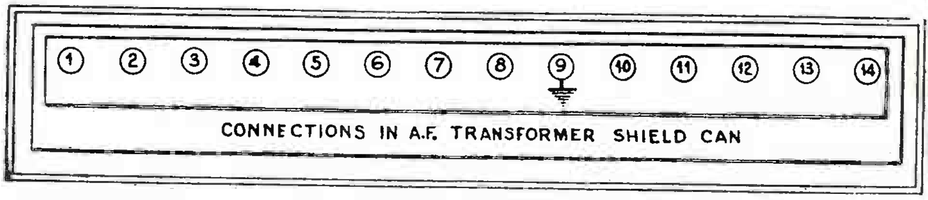

CONNECTIONS IN A.F. TRANSFORMER SHIELD CAN

C9, C10 and C11 in one case and C13 in another (C9 and C10 have blue leads and C11 has brown leads, and C13 has a yellow lead), are mounted on AFT shield can, above lugs 9, 10 and 11.

The "resistance network" of the "Power Converter," as the current supply unit is called, has its return circuit to "B—" completed through the internal resistance of the tubes, instead of through an external resistor.

If a magnetic reproducer or separately-excited-field dynamic is used, "jumper" connects posts A and B in power pack; when a high-resistance-field dynamic reproducer is used its field coil may be energized by connection to posts A and B, "jumper" then shorting CH2 by being connected to posts A and C.

The Color Code

1—Green, V1, V2 and V3 filament supply, 1.5 volts;
2—Green, same as above;
3—Red, Filament supply for V4, V5 and V9;
4—Red, same as above;
5—Yellow, filament of V6 and V7;
6—Yellow, same as above;
7—White, "B+" power;
8—Green, "B+ for V5;
9—Brown, "B+" for V1, V2 and V3;
10—Blue, "B+" for V4 (detector);
11—Yellow, "B—" and chassis ground.

Typical Voltage Readings

Tube No.	Tube Type	Voltages			Plate Current (Ma.)	
		"A"	"B"	"C"	Normal	(Grid Test)
V1	'26	1.4	150	9	5	12
V2	'26	1.4	150	9	5	12
V3	'26	1.4	150	9	5	12
V4	'27	2.1	60	0	2	2
V5	'27	2.1	150	8	5	8
V6	'71A	4.9	150	30	18	41
V7	'71A	4.9	150	30	18	41

A special design is followed in the construction of AFT1; the primary is tapped, the smaller portion having the correct impedance for the phonograph pick-up.

Terminals for the reproducer are indicated in the schematic circuit as LS.

AFT1, AFT2, AFT3 and C16 are housed in a single shield can, the connections being brought to soldering lugs. They are represented in these columns by the numerals one to fourteen in small circles.

The panel switch marked "Tone Control" functions by shunting the secondary of AFT1 with C15 and the primary of AFT2 with C16. Normally, there is a shunt capacity of .00025-mf. connected to the secondary of AFT1; it is C14. One side of the secondary of AFT2 is shunted by C17, the purpose of which is to eliminate oscillation of the push-pull circuit due to variations in tubes when purchased or during the life of the power tubes.

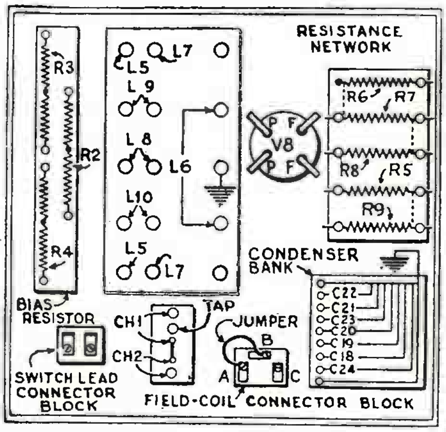

R10 and R11 are tubular resistors connected at the tube sockets.

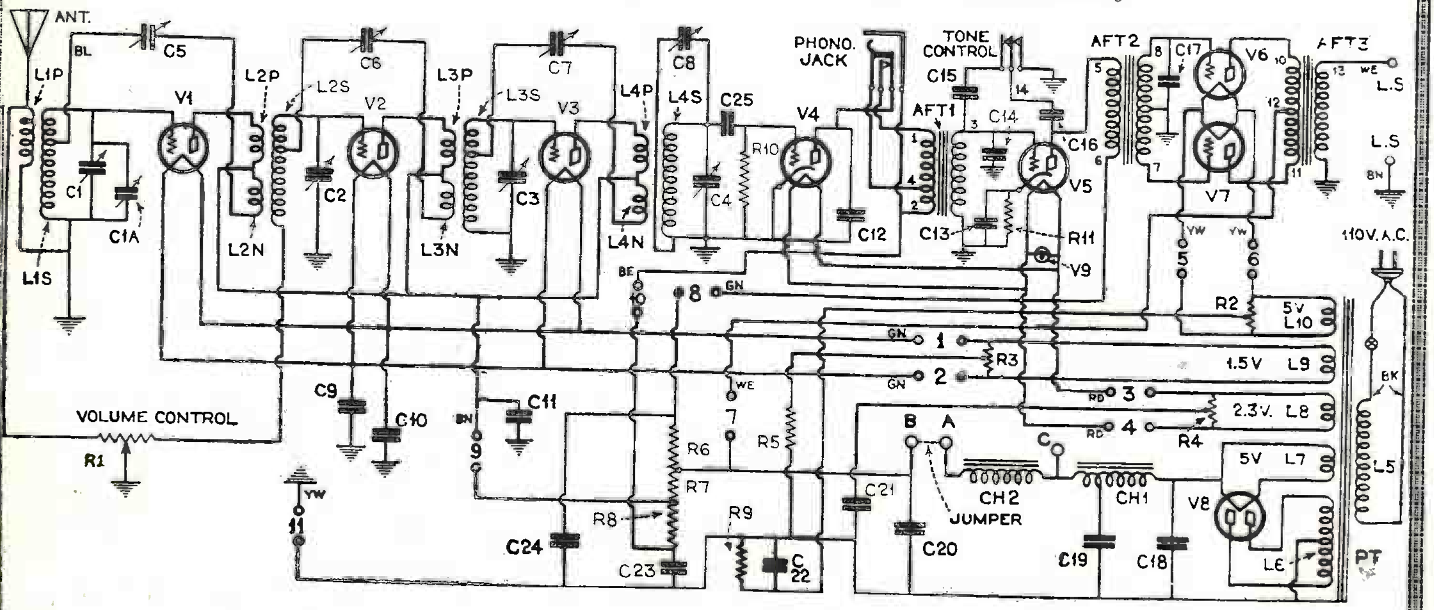

BRUNSWICK BALKE COLLENDER CO.

The Brunswick Models 14, 21 and 31 employ identically the same R.F. chassis and essentially the same socket power unit. In the Model 31 S.P.U. the pickup jack has been replaced with a radio-record switch, cable and input transformer. The input transformer is necessary in order that the low impedance pickup as used on this model may be matched with the relatively high input impedance existing in the primary of the first audio frequency transformer. Commercially available pickups such as can be purchased for use with Models 14 and 21 are of the high impedance type and therefore do not require the use of this extra input transformer.

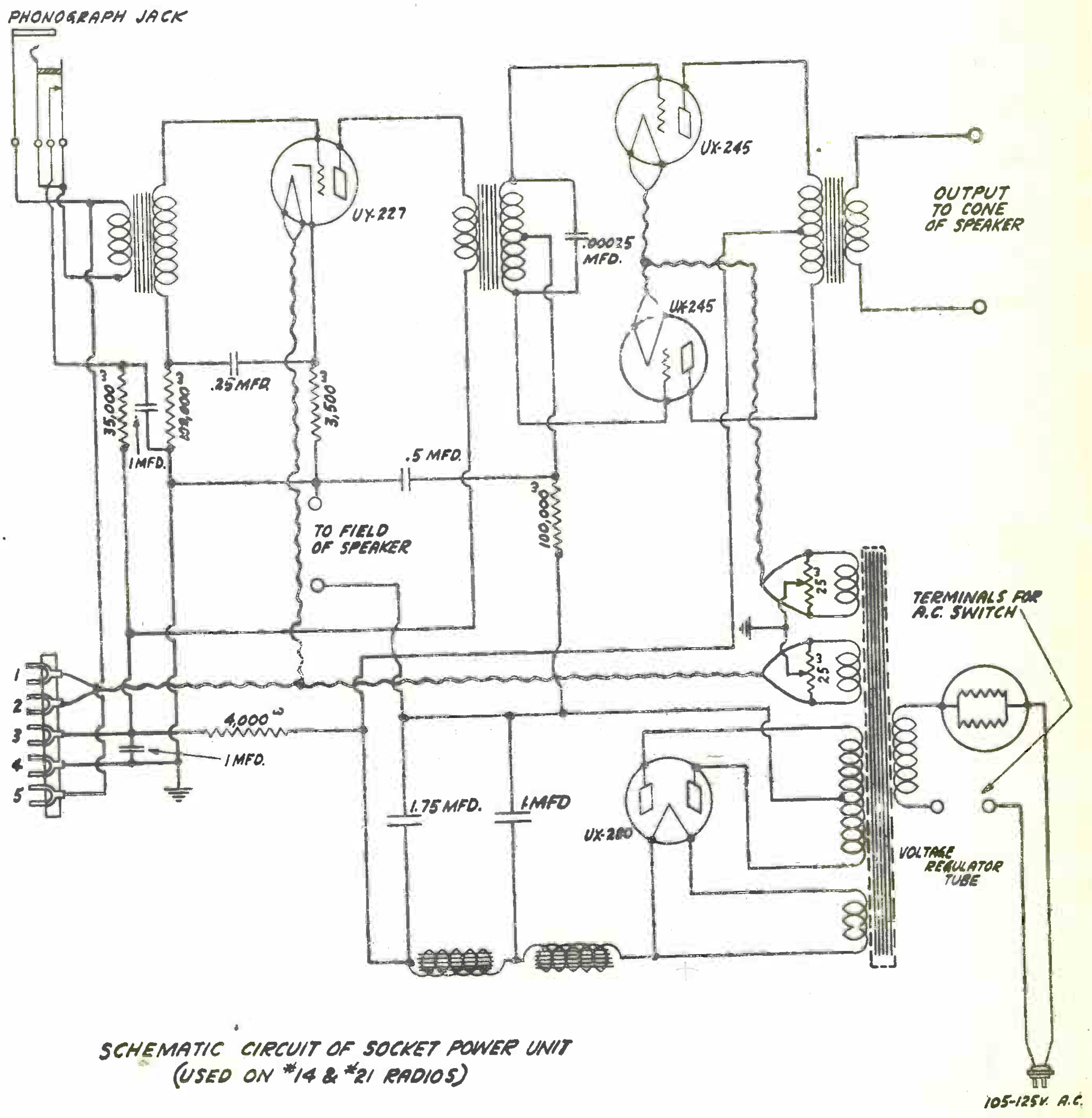

SCHEMATIC CIRCUIT OF SOCKET POWER UNIT
(USED ON #14 & #21 RADIOS)

Radio Service Data Sheet

BRUNSWICK MODEL 31 COMBINATION RADIO AND PANATROPE

In this receiver a radio-record switch, Sw2, cable and input transformer, T4, are used, in order that the low-impedance of the pick-up may be matched with the relatively high input impedance existing in the primary of T1.

Referring to the parts layout sketch, units TC1, TC2, TC3 and TC4 are trimmer condensers in shunt to the tuning condensers but not shown in the schematic circuit.

This receiver is in three sections: The R.F. chassis, the "SPU" (socket-power-unit) chassis and the dynamic reproducer. Field current for the latter is supplied by the SPU. Note that operation of the receiver should not be attempted unless either the field coil of a dynamic or a 600-ohm resistor is connected across the terminals for the two "field" leads; this resistor must be capable of carrying 100 ma.

To facilitate service, the R.F. chassis and SPU chassis are bolted to a single mounting board which, in turn, may be removed from the cabinet by removing retaining bolts at the rear of the mounting board.

For hum control, two filament shunt resistors, R9, R10, with variable center taps, are provided on the SPU chassis. R9 is adjusted first and then R10. If R10 appears unresponsive, try other '27s at V4 and V5. Abnormal hum may be due to one or more of the following causes: (1) One or more R.F. stages oscillating; (2) low-emission tube, particularly a '45 or the '80; (3) open filter or by-pass condenser; (4) open grid lead in R.F. or audio amplifier; (5) center arms of R9 or R10 not grounded or poorly grounded.

Abnormal hum, which appears usually on a strong local or nearby station and cannot be balanced out with R9 or R10, may be due to condition (1), above, and must be remedied before further adjustment of R9 or R10. At the factory, these receivers are neutralized for standard tubes, and the neutralizing screws then sealed with collodion to maintain adjustment. Before attempting to re-neutralize the receiver, it is advisable to test the tubes or try others; as an abnormal one may be the cause of circuit oscillation.

Additional checks on the possibility of R.F. circuit oscillators are these indications: Distorted reception of any or all stations—usually on the lower wavelengths; a whistle or squeal preceding the station being tuned in and *not* due to a two-station carrier heterodyne; motor-boating on all portions of the broadcast band.

Standard practice in neutralizing this receiver is as follows: Adjust an audio-modulated oscillator for 1400 kc. and couple it to the "long antenna" post of the receiver with a five-foot wire, one end of which should be wrapped two or three times about the oscillator coil. Tune in the oscillator signal on the radio to maximum volume, using both the tandem-condenser control and C5.

Then allow the receiver and oscillator to operate for about a minute (in order that the tubes may become thoroughly warmed up and "stable") and replace the first R.F. tube with a tube of average characteristics which is known not to cause oscillation in a receiver which has previously been neutralized; this tube must have an open filament circuit. A fault into which some service men fall is to neutralize with one make of tube and then, after neutralizing, insert a different make—the circuit may then oscillate more than before.

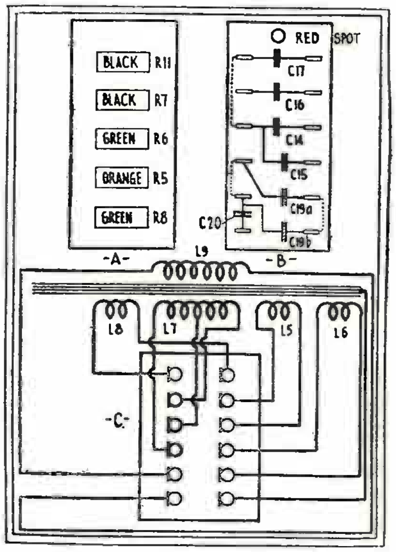

Adjust C6 (see parts layout) for minimum signal. The signal intensity will be so great that an entirely silent point cannot be found.

Replace the neutralizing tube with the standard tube, and repeat performance for tubes V2 and V3; in each instance allowing about a minute for the oscillator and receiver tubes to become stabilized.

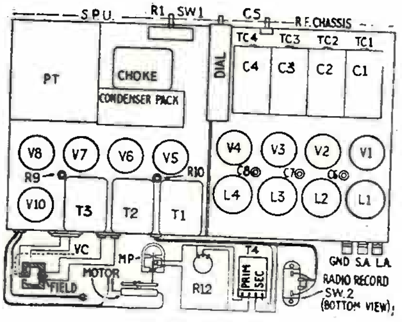

If any difficulty is experienced in the neutralizing process, check supply potentials and the by-pass condensers. An *open* condenser may allow sufficient R.F. feed-back to the previous stage to make it impossible to find a good signal minimum. Also, a dummy tube that does not have quite the necessary constants may make it difficult to balance the circuits.

The normal line-current drain of this receiver is approximately 115 watts. The average voltages indicated at the terminals of the tubes are given in an accompanying table.

Tube No.	Type Tube	——Voltage—— "A"	"B"	"C"	Plate Ma. "Normal"
V1	'27	2.5	150	12	5.5
V2	'27	2.5	150	12	5.5
V3	'27	2.5	150	12	5.5
V4	'27	2.5	45	0	3.4
V5	'27	2.5	145	9	3.6
V6	'45	2.4	240	27	30.0
V7	'45	2.4	240	27	30.0
V8	'80	5.0	....	....	....

The values of the parts in this receiver are as follows: R1, 25,000 ohms; R2, 800 ohms; R3, 35,000 ohms; R4, 2 megohms; R5, 35,000 ohms; R6, 100,000 ohms; R7, 3,500 ohms; R8, 100,000 ohms; R9, 25 ohms; R10, 25 ohms; R11, 4,000 ohms; R12, 70 ohms. The capacities used are as follows: C9, .00015-mf.; C10, 0.2-mf.; C11, 0.2-mf.; C12, 0.02-mf.; C13, .002-mf.; C14, 1.5-mf.; C15, 1-mf.; C16, 0.25-mf.; C17, 0.5-mf.; C18, .00025-mf.; C19, 1.75-mf.; C20, 1.0-mf. The positions of L1, L2, L3, L4, L5, L6, L7, L8 and L9 are obvious.

Trouble with the Panatrope portion of the receiver may usually be classed as: (1) Magnetic pickup MP out of adjustment; (2) Sw2 out of adjustment; (3) motor speed irregular.

There are four points on the turntable unit which require lubrication: (1) Upper turntable bearing; (2) lower turntable bearing; (3) governor bearing, weight end; (4) governor bearing, worm-gear end. To operate noiselessly and at constant speed it is necessary that the motor be kept in good condition. To remove the motor for oiling, proceed as follows: (1) Remove the record turntable by pulling it upward; (2) remove the four motor-securing bolts; (3) detach the motor leads from the cable in the cabinet and lift motor from cabinet. After this, all parts should be cleaned. Then, using a light-grade oil, proceed to lubricate the motor at the points mentioned above. This lubrication process should be followed every six months.

A noisy turntable motor may usually be traced to: (1) Governor shaft bearings loose; (2) lamination loose in one or more of the four coils; (3) coil loose on its core; (4) defective spring in governor. If the speed is not constant, it may be due to (1) or (4), above. To tighten governor bearing, loosen set screw, push bearing gently toward center of motor and tighten screw. Do not force bearing in too far, or it may bind the governor shaft. (Be sure set screw of opposite bearing is tight.) Laminations may be pressed together by tightening the retaining bolts. If a coil is found loose on its core, force a small wedge of soft wood between coil and core, to prevent the coil from vibrating, and thus stop the noise. A bent or broken governor spring should be replaced.

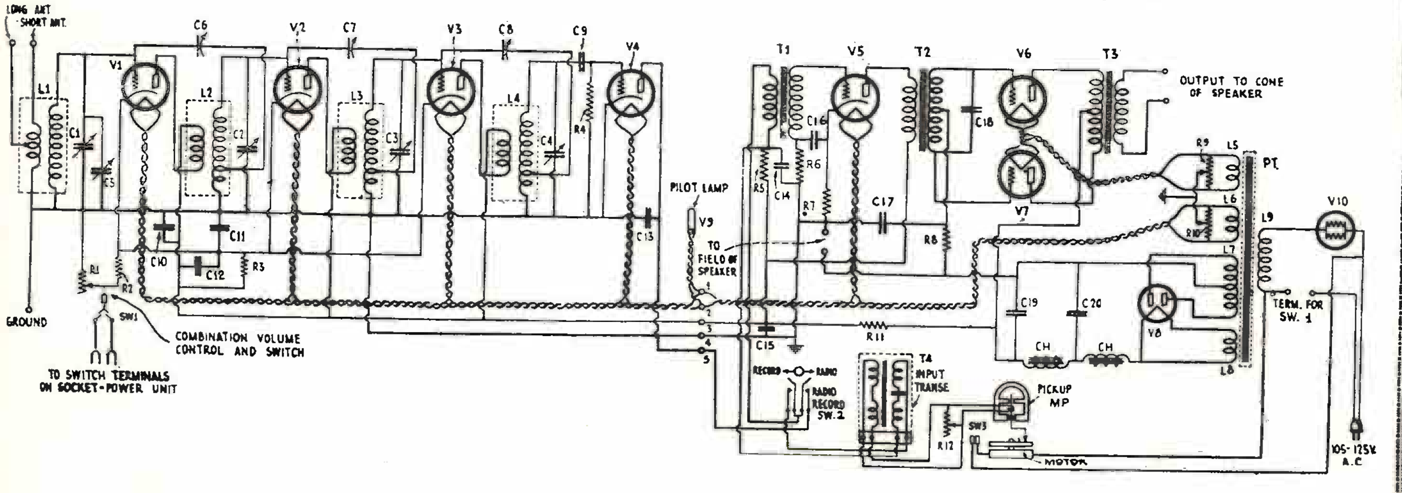

BUSH AND LANE PIANO CO.

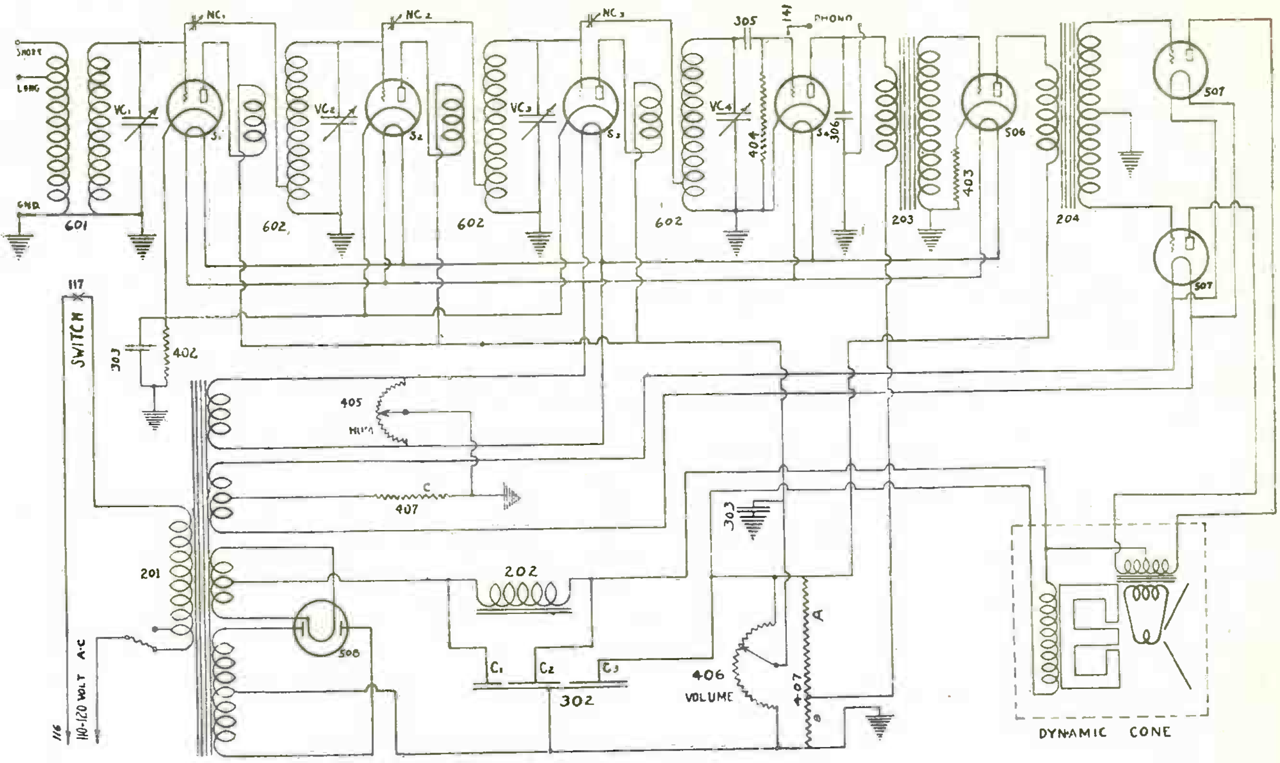

No. 10 De Luxe

301—Four-gang Tuning Condenser.
302—Filter Condenser Block.
303—Double By-pass Condenser, ½ Mfd. and ½ Mfd.
305—.00025 Mfd. Grid Condenser (included with 4-socket panel also).
306—.002 Mfd. Detector Plate By-pass Condenser.

402—550 ohm Bias Resistor for the three R. F. stages.
403—1500 ohm Bias Resistor for the first audio stage.
404—Grid Leak, 2 megohms.
405—Hum Control, 20 ohm potentiometer.
406—Volume Control 10,000 ohm potentiometer.

409—Volume Control Insulating Washer, flat.
410—Volume Control Insulating Washer, extruded.
411—Volume Control Mounting Nut.
407—Voltage Divider Resistor, 5,250 ohm total.
A—3,000 ohms.
B—1,500 ohms.
C— 750 ohms.

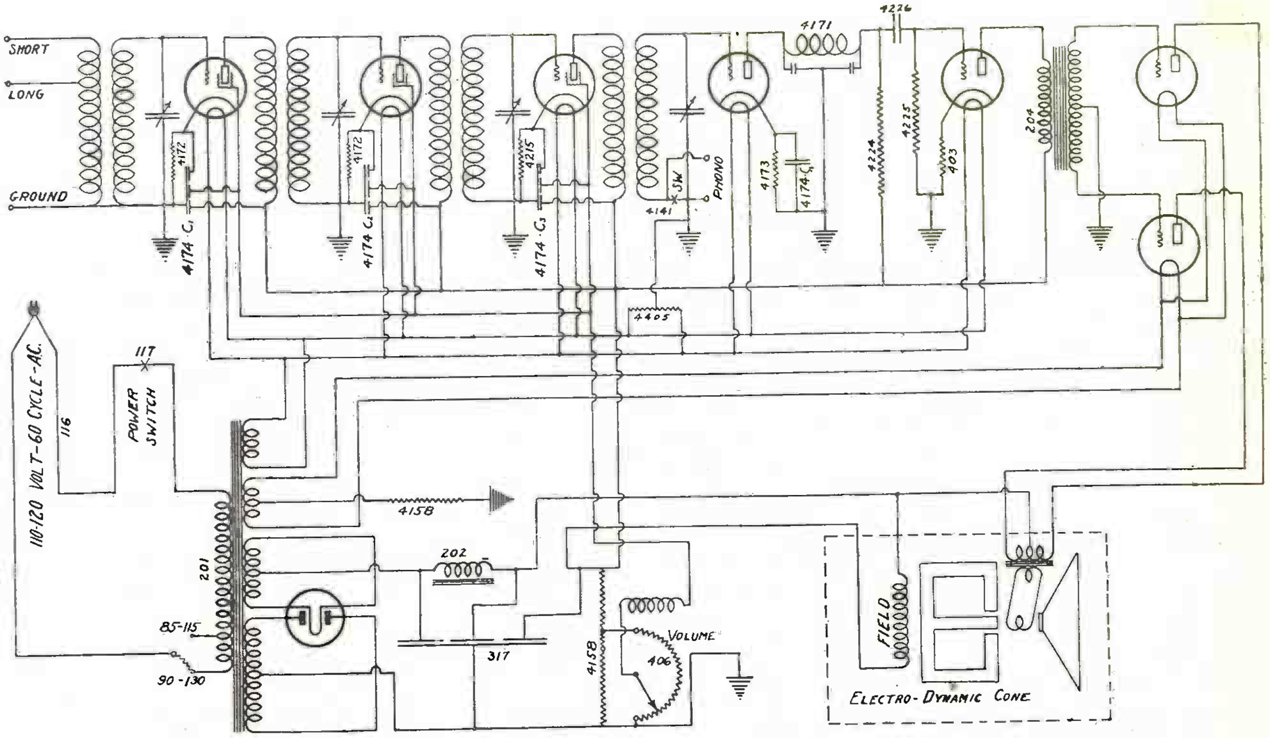

No. 12 Screen Grid

4174—Ten Section By-Pass Condenser, C1, C2, C3, C4.
4173—10,000 Ohm Detector Bias Resistor.
4215—5,000 Ohm R.F. Bias Resistor } R1, R2, or R3
4172—3,000 Ohm R.F. Bias Resistor
4175—1,500 Ohm R.F. Bias Resistor

4405—20 Ohm Center-Tapped Hum Balance Resistor.
4158—Voltage Divider Resistor 5750 Ohms, Total.
406—10,000 Ohm Volume Control.
317—Electrolytic Filter Condenser Assembly.

CLEARTONE RADIO CORP.

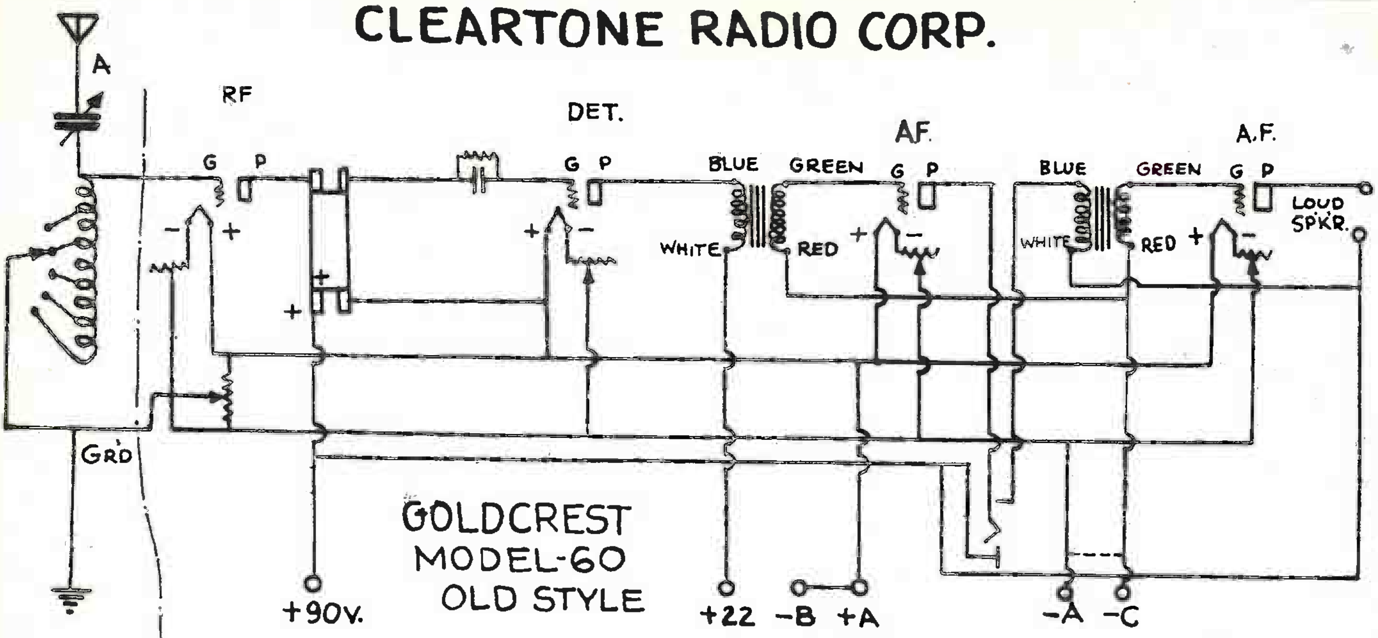

GOLDCREST
MODEL-60
OLD STYLE

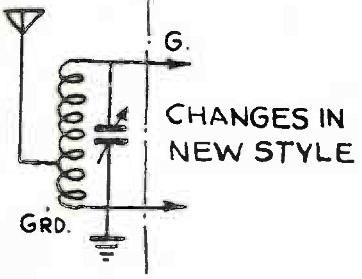

CHANGES IN
NEW STYLE

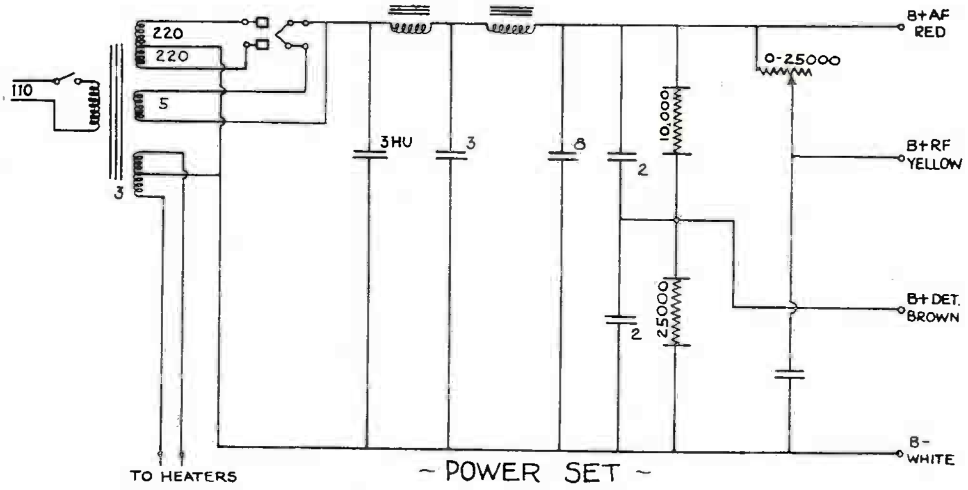

~ POWER SET ~

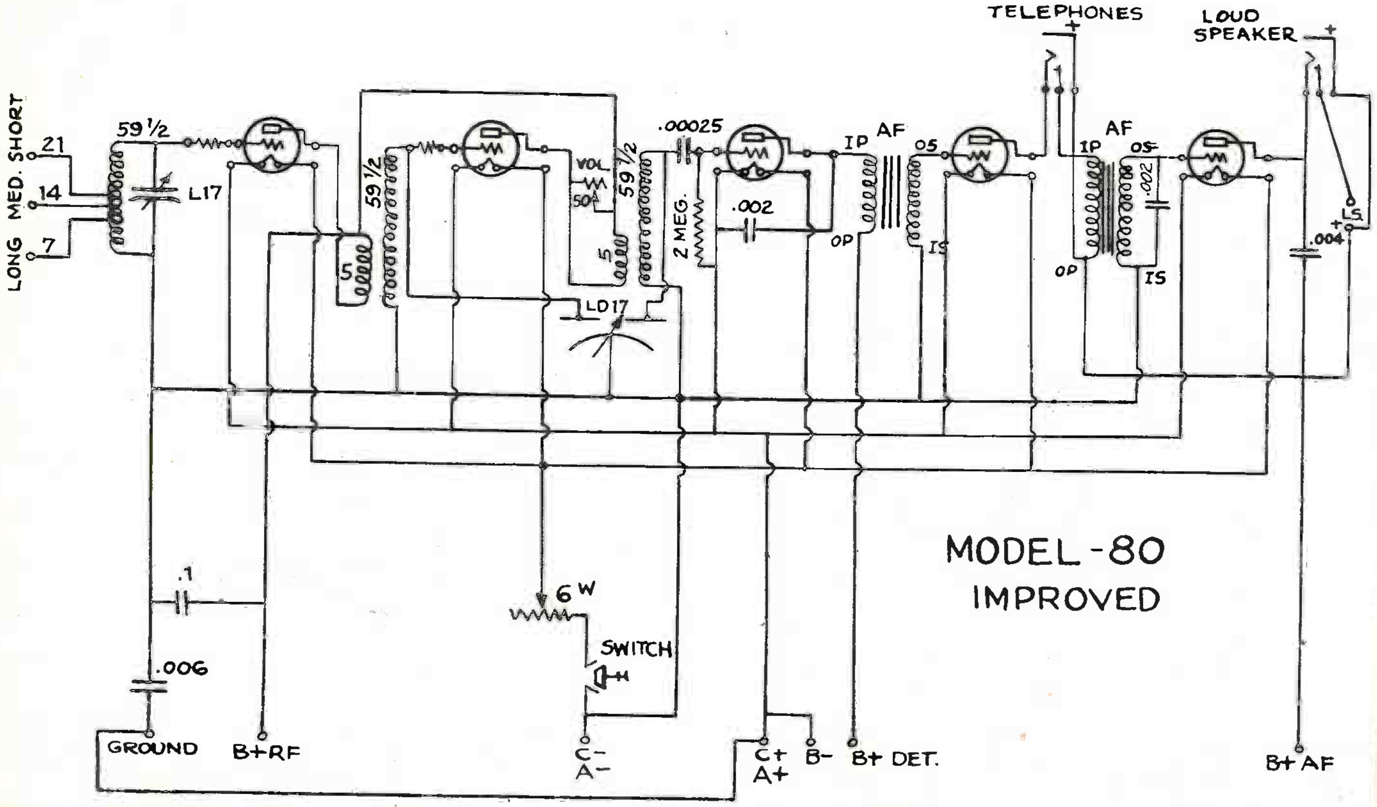

MODEL-80
IMPROVED

CLEARTONE RADIO CORP.

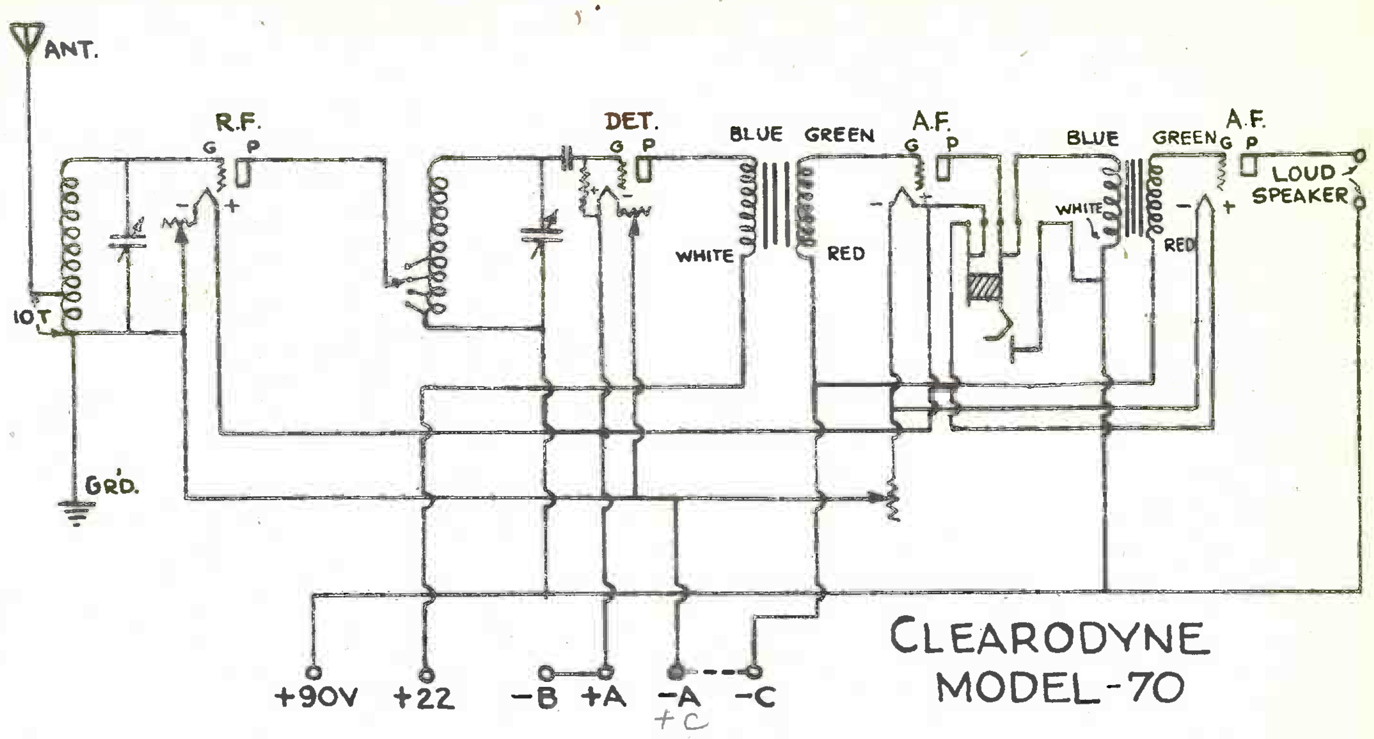

CLEARODYNE MODEL-70

CLEARTONE SERIES-100

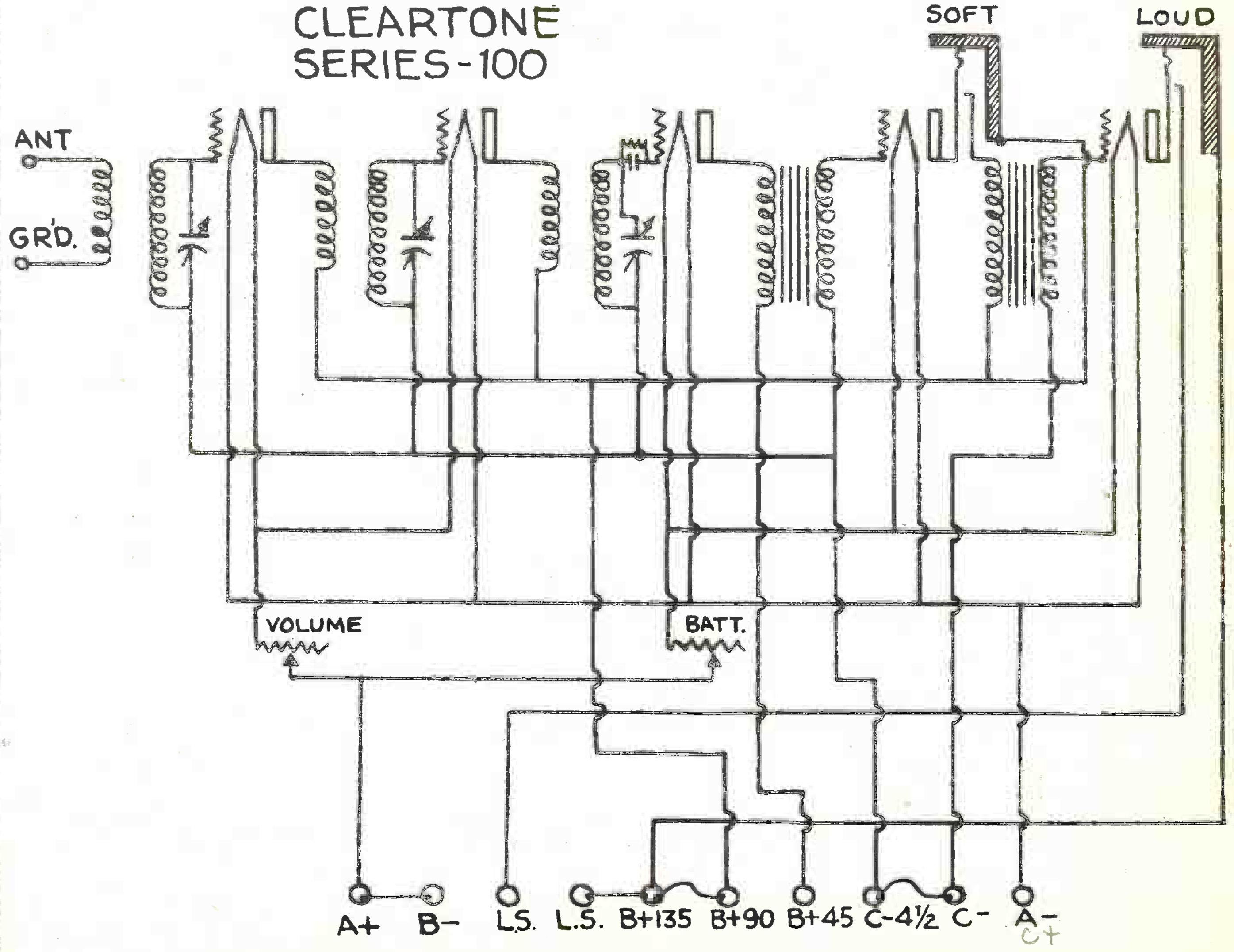

CLEARTONE RADIO CORP.

MODEL – 110 COMPACT

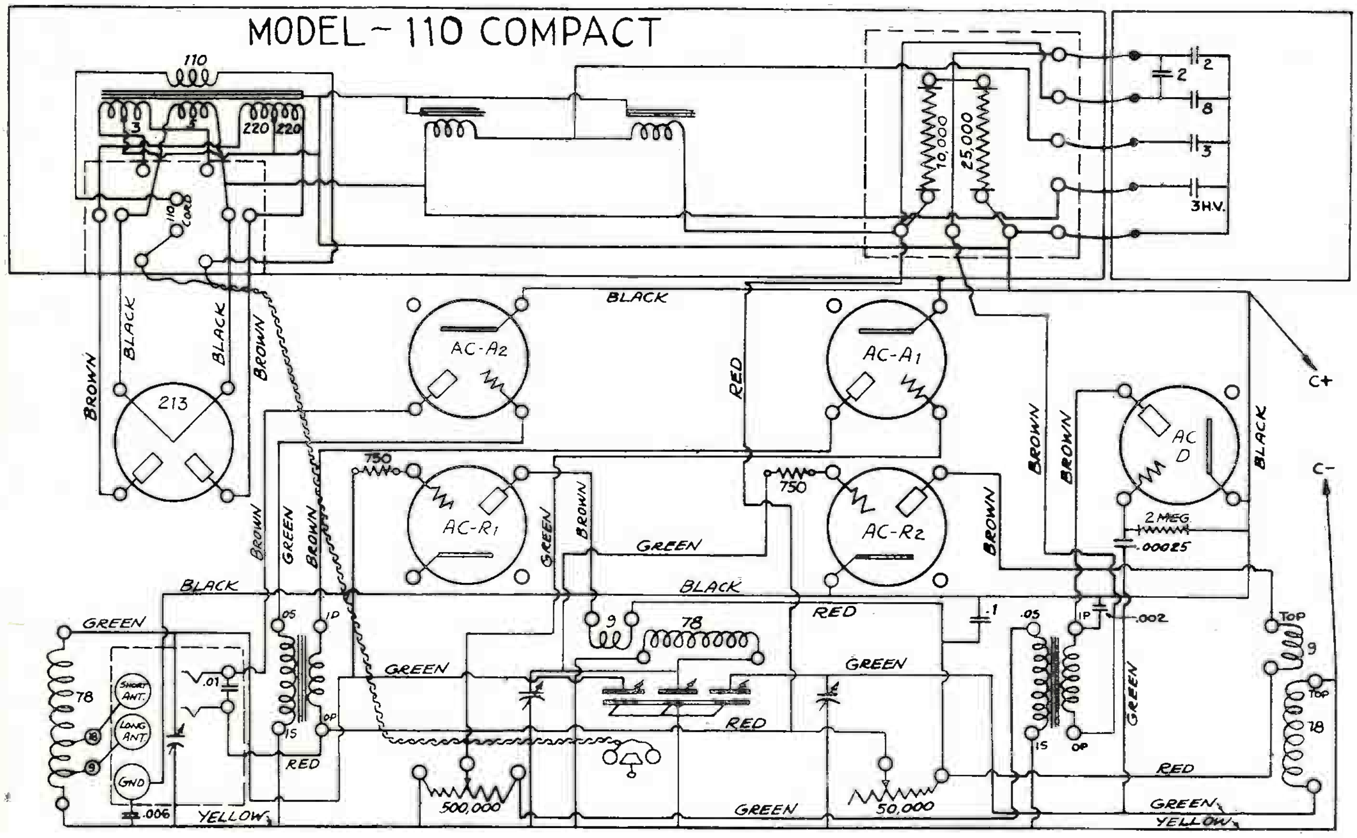

MODEL - 112

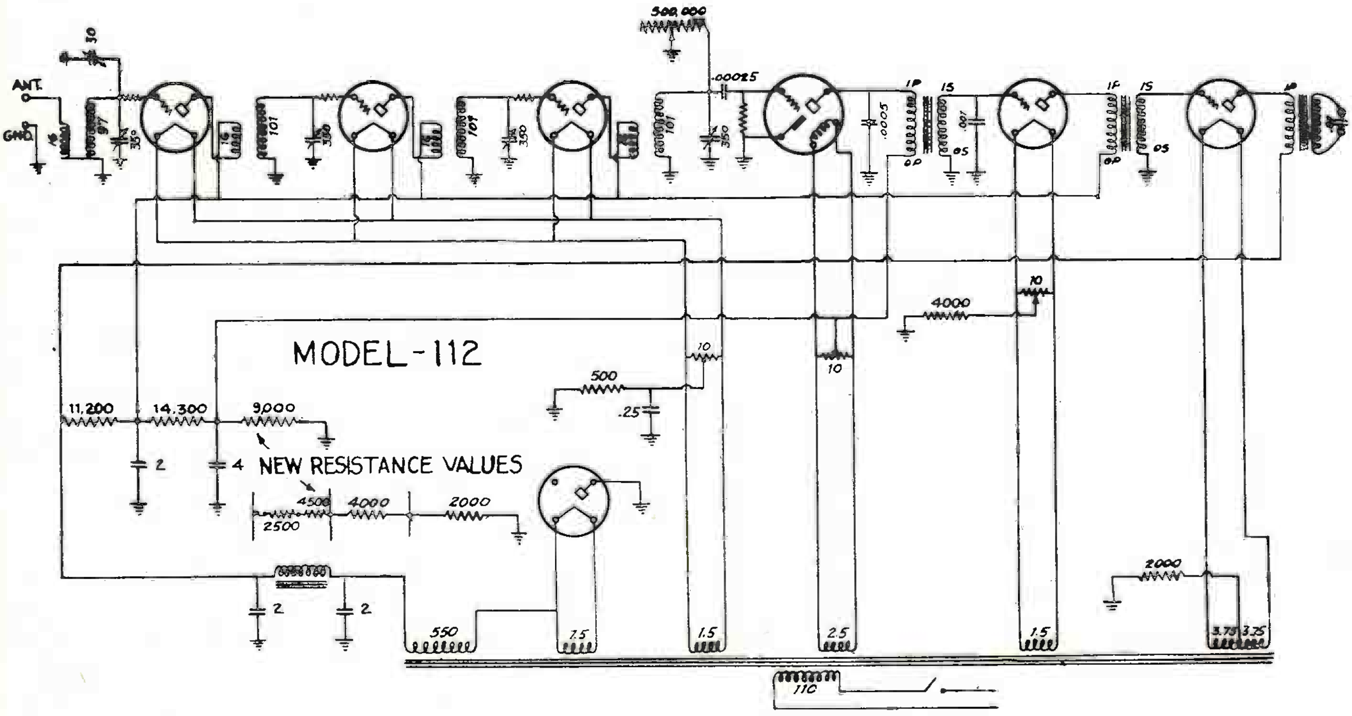

COLONIAL RADIO CORP.

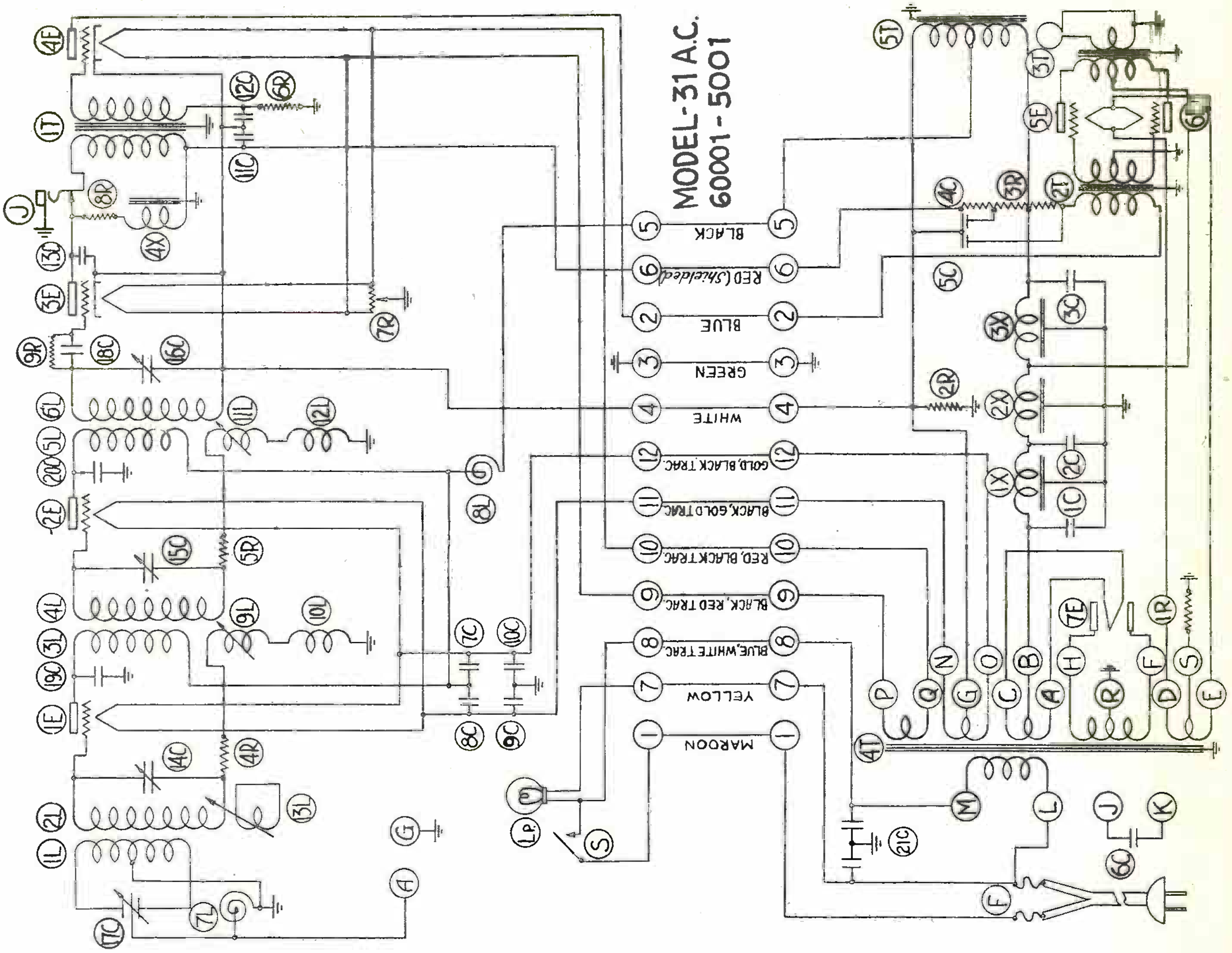

POWER UNIT WIRING

Model 31 AC 5002

CODE	COLOR	TYPE
$A-7E_3$	GREEN + YELLOW TRAC.	"A" CAB.
$B-1X_1$	RED	"
$C-7E_4$	MAROON	"
$D-6E_4$	GREEN	"
$E-6E_3$	BLUE	"
$F-7E_2$	YELLOW	"
G-2R	BLUE + RED TRAC.	"
$H-7E_1$	DAVIS BROWN	"
$1X_1-1C$	RED	"
$1X_2-2C$	RED + BLUE TRAC.	"

CODE	COLOR	TYPE
L-7	BLACK	"B" CAB.
M-8	WHITE	"
N-11	BLACK + GOLD TRAC.	"
O-12	GOLD + BLACK TRAC	"
P-9	BLACK + RED TRAC.	"
Q-10	RED + BLACK TRAC.	"
$6E_3-5E_3$	BLUE	JUMP.
$6E_4-5E_4$	GREEN	"
$1X_2-2X_1$	RED	"
$2X_2-3X_1$	RED	"
$3X_2-3C$	RED	"
$S-1R_1$	BLUE	"
$R-1R_2$	WHITE	"
$2T-6E_1$	WHITE	LEAD
$2T-5E_1$	YELLOW	"

CODE	COLOR	TYPE
$3T-5E_2$	YELLOW	LEAD
$3T-6E_2$	GREEN	"
$3T-3X_1$	RED	"
5T-4	WHITE	"
5T-5	BLACK	"
5T-3C	BROWN	"
F_2-1	BLACK	JUMP.
F_4-7	BLACK	"
2T-2	BLUE	LEAD
J-6C	BLACK	"
K-6C	BLACK	"
2R-4	WHITE	JUMP.
$3X_2-3R_2$	RED + WHITE 50-50	"
$3R_4-6$	RED + WHITE 50-50	"
3G-3	BARE	"

Radio Service Data Sheet

COLONIAL 31 AND 32 D.C.

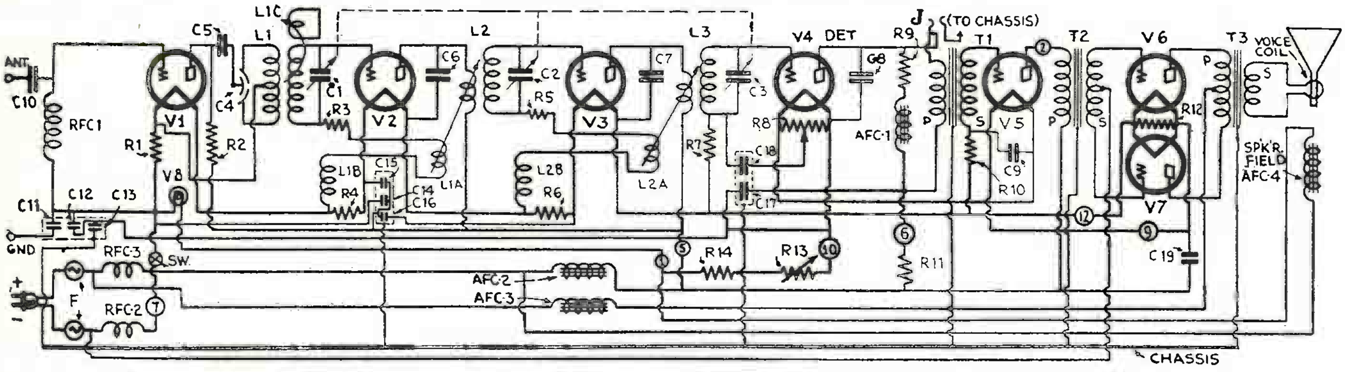

Complete schematic circuit of the Colonial 31 D.C. receiver. The filament wiring is shown in simplified form below.

The Colonial "31 D.C." which has had very wide distribution, incorporates a number of unusual design features. For instance, volume is controlled by varying condenser C4; with the middle plate centered the signal is balanced out. An absorption loop (L1C) improves the tuning characteristic.

The cable color code is as follows: 7, yellow; 1, maroon; 5, black; 2, blue; 6, red; 12, gold with black tracer; 9, black with red tracer; 10 red with black tracer; 3, green; 4, 8 and 11 are not used.

V1, V2, V3, V4 and V5 are '26 tubes; V6, V7, are '71As; while V8 is a 110 V. "miniature base" 15-watt lamp.

The following parts are contained in the power pack: F, 5-amp. fuses; C19, 2-mf.; AFC2, AFC3, 1½-henry chokes; T2, A.F. push-pull input transformer; T3, A.F. push-pull output transformer; AFC4, 18-ohm reproducer field; R11 100,000 ohms; R12 9.1 ohms; R13 20-ohm power rheostat; R14 60 ohms; radio-frequency chokes RFC2 and RFC3; and the tubes V6 and V7.

Following are the constants for the receiver chassis: RFC1, R.F. choke; C5, C6, C7, C8, C10, .002-mf.; C11, C13, 0.5-mf.; C9, C12, C18, 0.1-mf.; C14, C15, C16, 0.4-mf.; C17, 1 mf.; C19, 2 mf. R1, R4, R6, 2.5 ohms; R2, R7, R10, 100,000 ohms; R3, 200 ohms; R5, 100 ohms; R8, 30-ohm potentiometer; R9, 10,000 ohms. Jack J is the connection in the plate circuit of detector tube V4 for a phonograph pickup.

A variation of 25% from the following average operating current values is permissible: Grid potential, V1, V2, V3, V4, 3 volts; V5, 2.25 volts; V6, V7, 14 volts. Filament potential, V1, V2, V3, 1.5 volts; V4, V5, 1.4; V6, V7, 4.7 volts. Plate potential, V1, 70 volts; V2, 98 volts; V3, V6, V7, 95 volts; V4, 55 volts; V5, 85 volts. Plate current, V1, 3.5 ma.; V2, V3, 7.5 ma.; V4, 0.3-ma.; V5, 4 ma.; V6, V7, 14 ma.

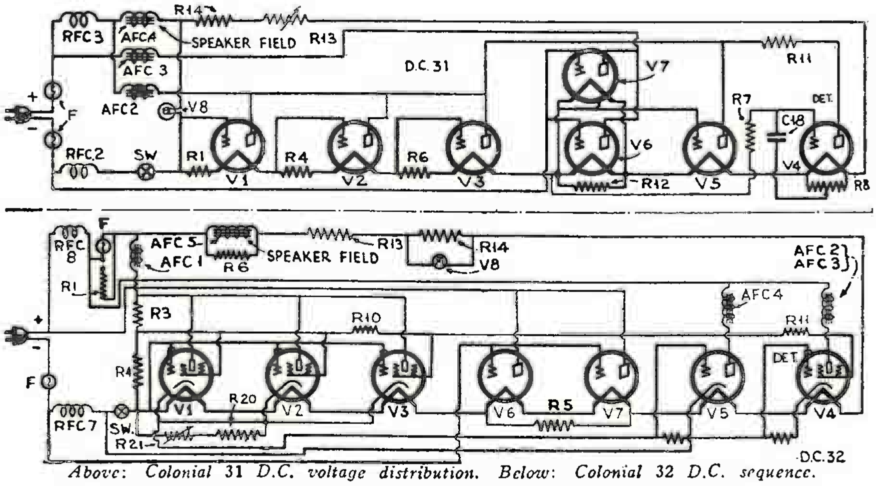

Above: Colonial 31 D.C. voltage distribution. Below: Colonial 32 D.C. sequence.

The following are the values for the chassis parts of the Colonial "32 D.C." screen-grid receiver. Condensers: C1, C2, C3, C4, .00035-mf.; C5, .00025-mf.; C6, C7, C8, C9, 5 mmf.; C10, 0.2-mf.; C11, C12, C14, C15, C16, C18, C19, C21, C22, C23, C32, C33, C35, 0.1-mf.; C13, C17, C20, 0.25-mf.; C24, C25, .00025-mf.; C26, C34, 1.0 mf.; C31, .05-mf. Resistors: R2, 10,000 ohms (volume control); R3, 35,000 ohms (pink); R4, 65,000 ohms (orange); R7, R8, R9, R12, 750,000 ohms (red); R10, 10,000 ohms (blue); R11, 250,000 ohms (white); R15, 50,000 ohms (black); R20, 200 ohms (black, wire-wound); R21, 75,000 ohms.

The following units are mounted in the power pack: condensers C27, 1.0 mf.; C28, C30, 0.5-mf.; C29, 0.1-mf.; resistors R1, 5.7 ohms, (vitreous); R5, 20 ohms (vitreous); R6, 200 ohms (black, wire wound); R13, 34.9 ohms ("chimney" type); R14, 1.43 ohms (vitreous); R16, 100,000 ohms (green); R17, 50,000 ohms (black); R18, R22, 100,000 ohms (green); R19, 2,000 ohms (red, wire-wound).

The chokes RFC7 and RFC8 are 930 microhenry; AFC1, AFC2, AFC3, AFC4, 50 henry; AFC5, 11.7 ohms. V8 is the pilot light. Fuses are 3- to 5-amp. rating.

The meter readings for the "Model 32 D.C." are approximately as follows: plate current, V1, V2, 1.3 ma.; V3, 1.2 ma.; V4, 0.15 ma.; V5, 3 ma.; V6, V7, 16 ma. Plate voltage, V1, V2, 91 volts; V3, 92 volts; V4, 81 volts; V5, 93 volts; V6, V7, 104 volts. Screen-grid potential, V1, V2, 32 volts; V3, 27 volts; V4, 5 volts. Control-grid potential, V1, V2, V3, V4, too low to read; V5, 2.25 volts; V6, V7, 5 volts.

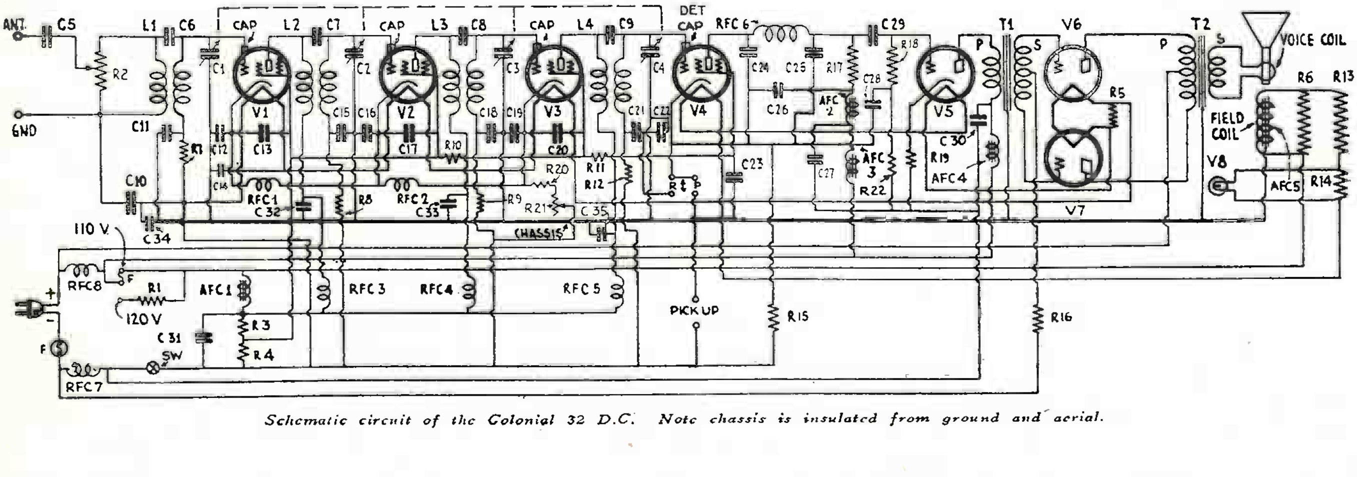

Schematic circuit of the Colonial 32 D.C. Note chassis is insulated from ground and aerial.

COLONIAL RADIO CORP.

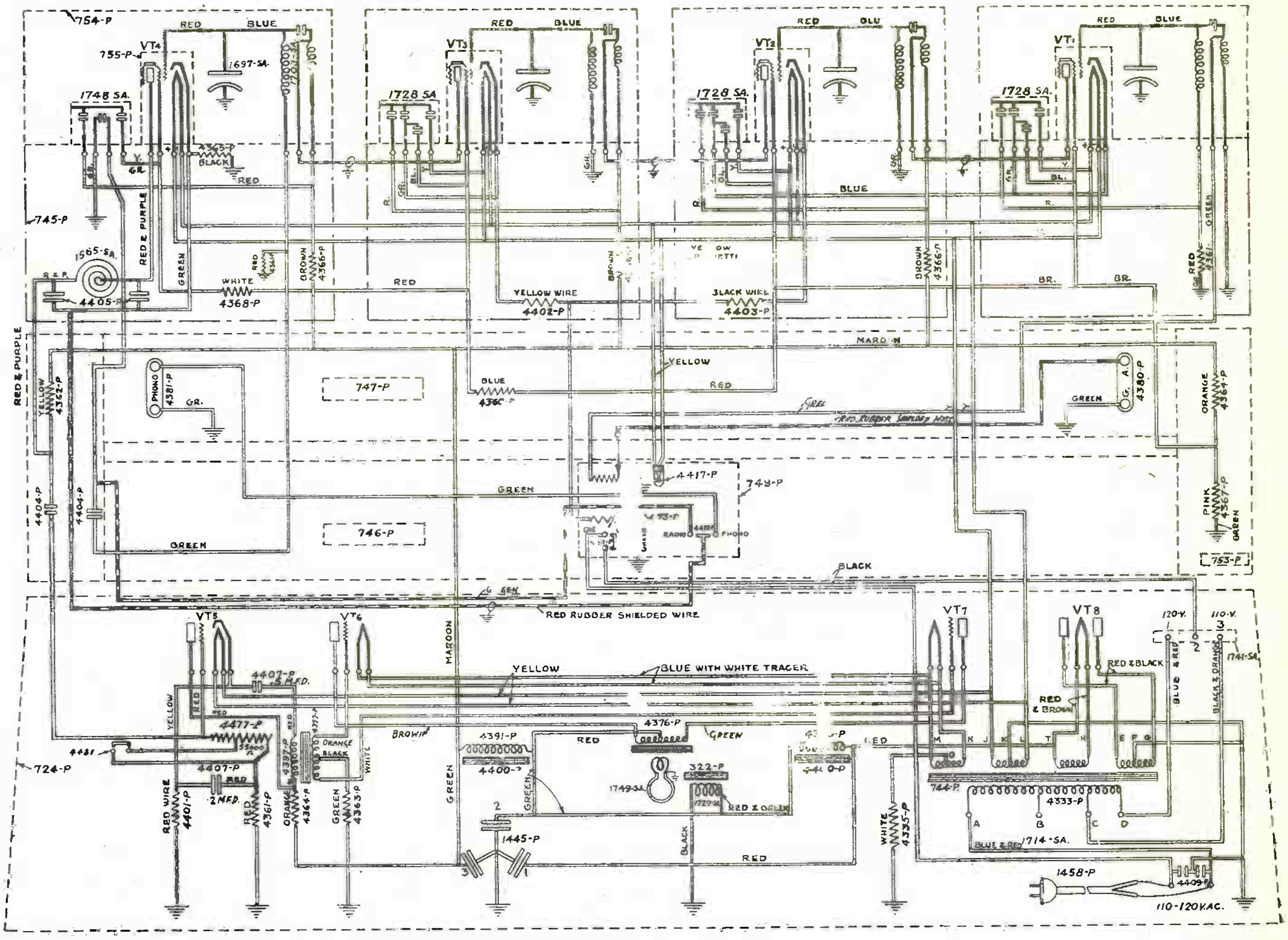

MODEL 32 A.C. 100001-Issue-J

Part No	Value	
4473—P	10,000 ohms	Volume control
4367—P	35,000	Pink
4364—P	65,000	Orange
4361—P	750,000	Red
4366—P	35,000	Brown
4366—P	35,000	Brown
4366—P	35,000	Brown
4402—P	400	Yellow wire wound resistor.
4403—P	200	Black wire wound resistor.
4473—P	75,000	Volume control.
4360—P	10,000	Blue
4368—P	250,000	White
4361—P	750,000	Red
4365—P	50,000	Black
4362—P	400,000	Yellow
4364—P	65,000	Orange
4361—P	750,000	Red
4401—P	2,000	Red wire wound resistor.
4477—P	80,000	
4363—P	100,000	Green
4335—P	1,000	White—mounted on power transformer

	0.000005 mfd.	Built into R.F. transformer.
1728—SA	0.1	Green lead
1728—SA (1st R.F. compartment)	0.1	Red lead
1728—SA (1st & 2nd R.F. compartments)	0.25	Brown lead
1728—SA (3rd R.F. compartment)	0.25	Brown lead
1748—SA	0.1	Yellow lead
1728—SA (2nd R.F. compartment)	0.1	Red lead
1728—SA (3rd R.F. compartment)	0.1	Red lead
1748—SA	0.1	Red lead
1697—SA	0.00035	Tuning condenser
4404—P	0.1	
1748—SA	0.5	Green leads
4405—P	0.00025	
4404—P	0.1	
4407—P	0.2	
4407—P	0.5	
1445—P	8	Mershon condenser
4409—P	0.1	

COLUMBIA PHONOGRAPH CO.

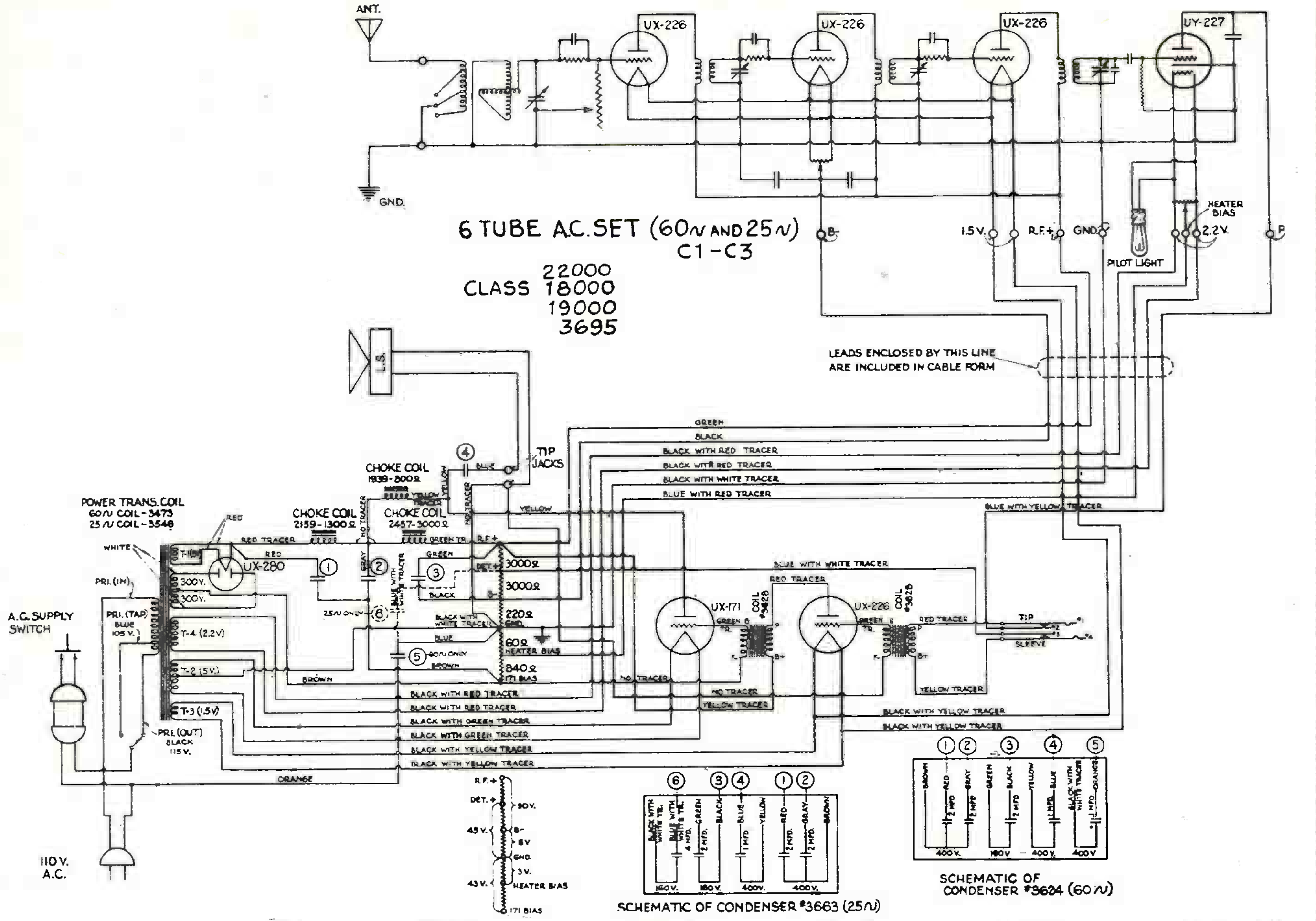

6 TUBE A.C. SET (60~ AND 25~) C1-C3

CLASS 22000 18000 19000 3695

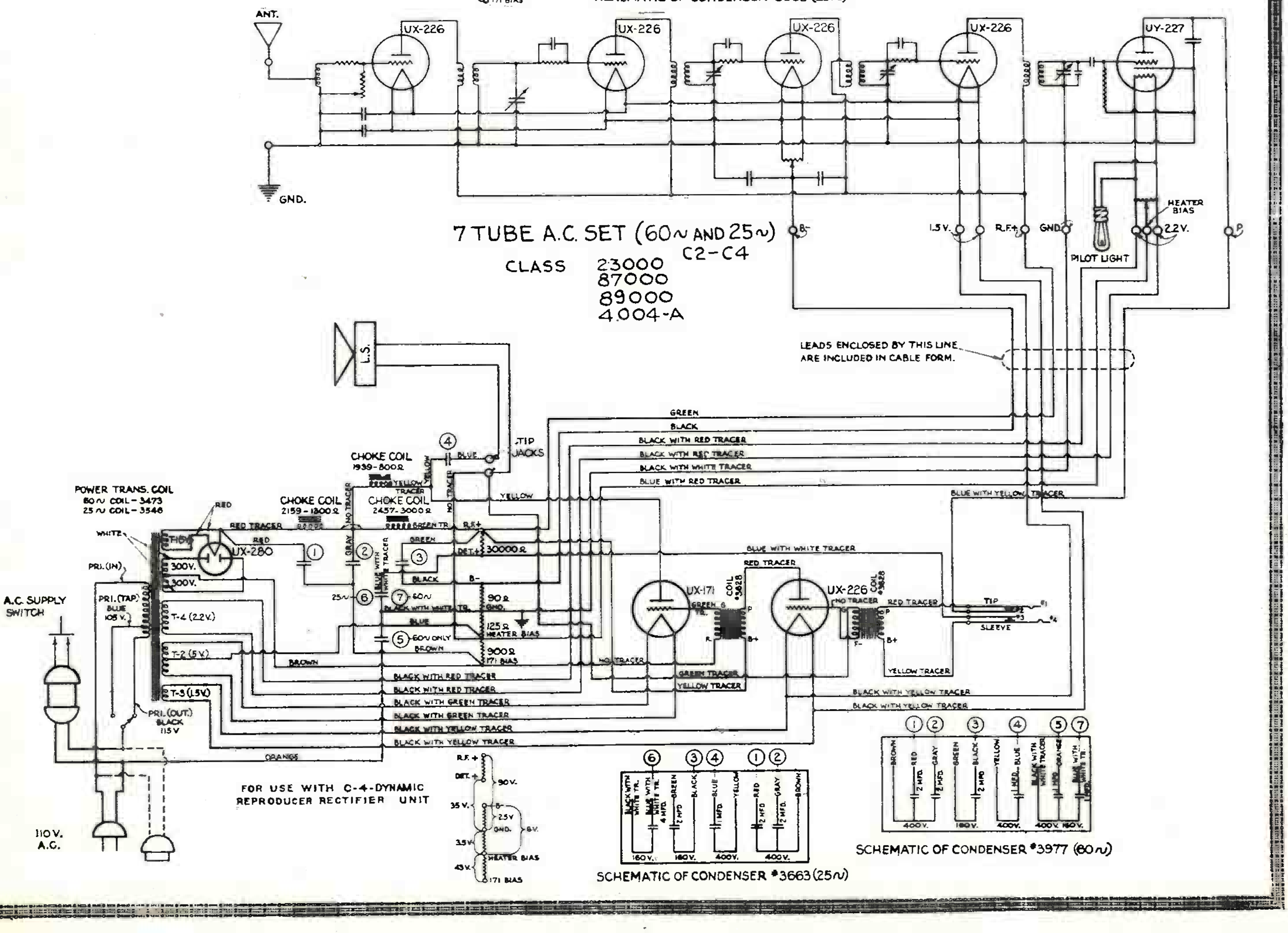

7 TUBE A.C. SET (60~ AND 25~) C2-C4

CLASS 23000 87000 89000 4004-A

COLUMBIA PHONOGRAPH CO.

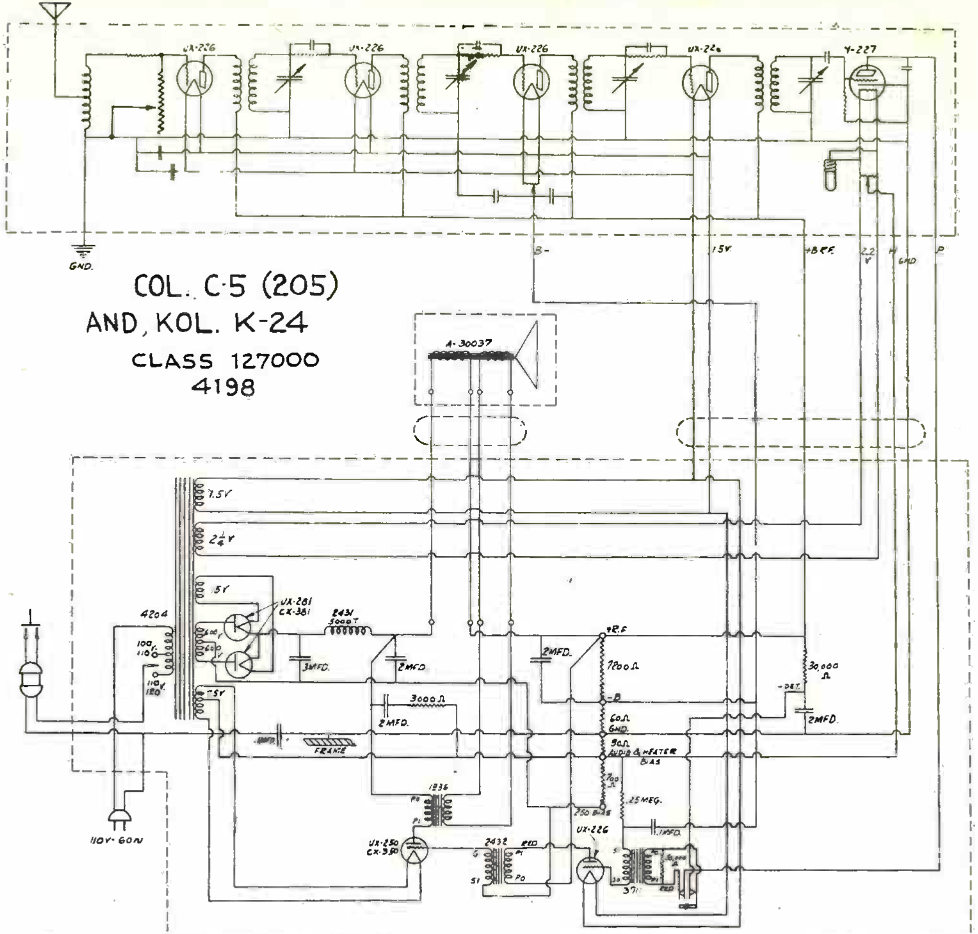

COL. C-5 (205)
AND, KOL. K-24
CLASS 127000
4198

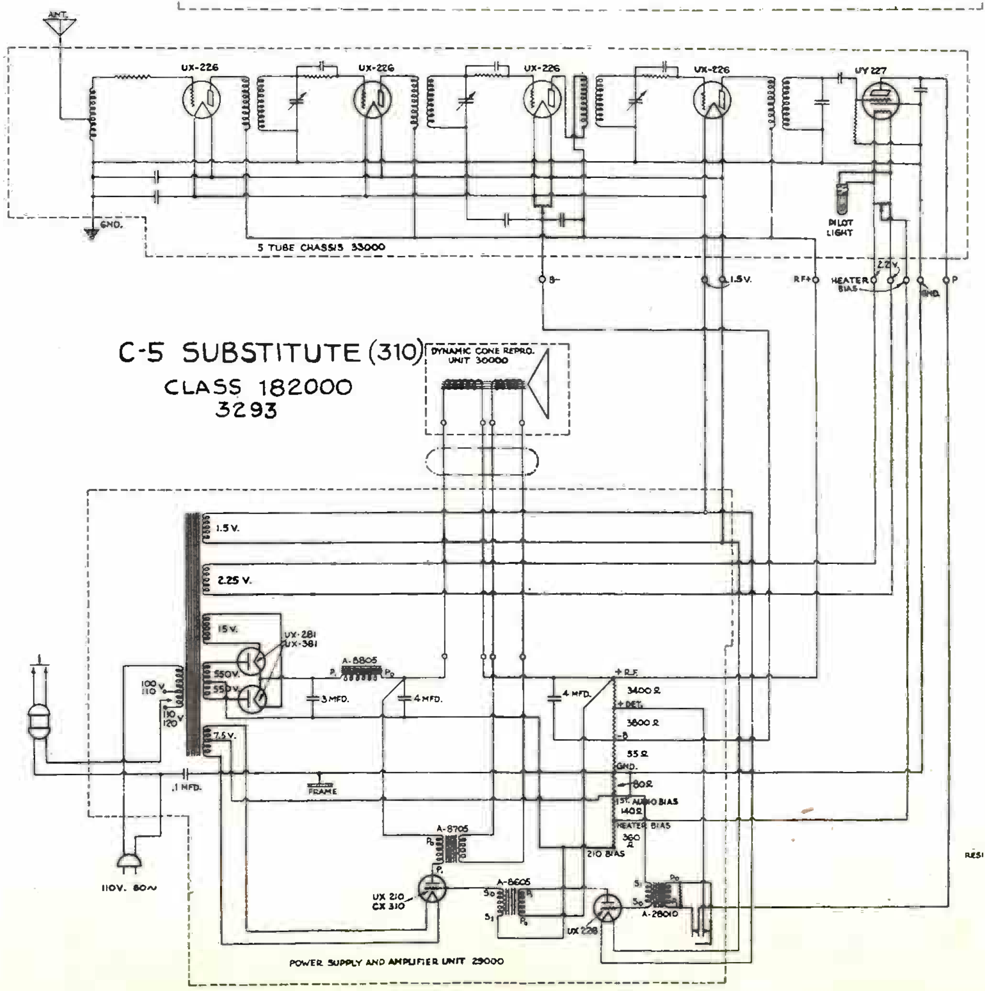

C-5 SUBSTITUTE (310)
CLASS 182000
3293

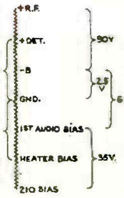

RESISTOR DIAGRAM

COLUMBIA PHONOGRAPH CO.

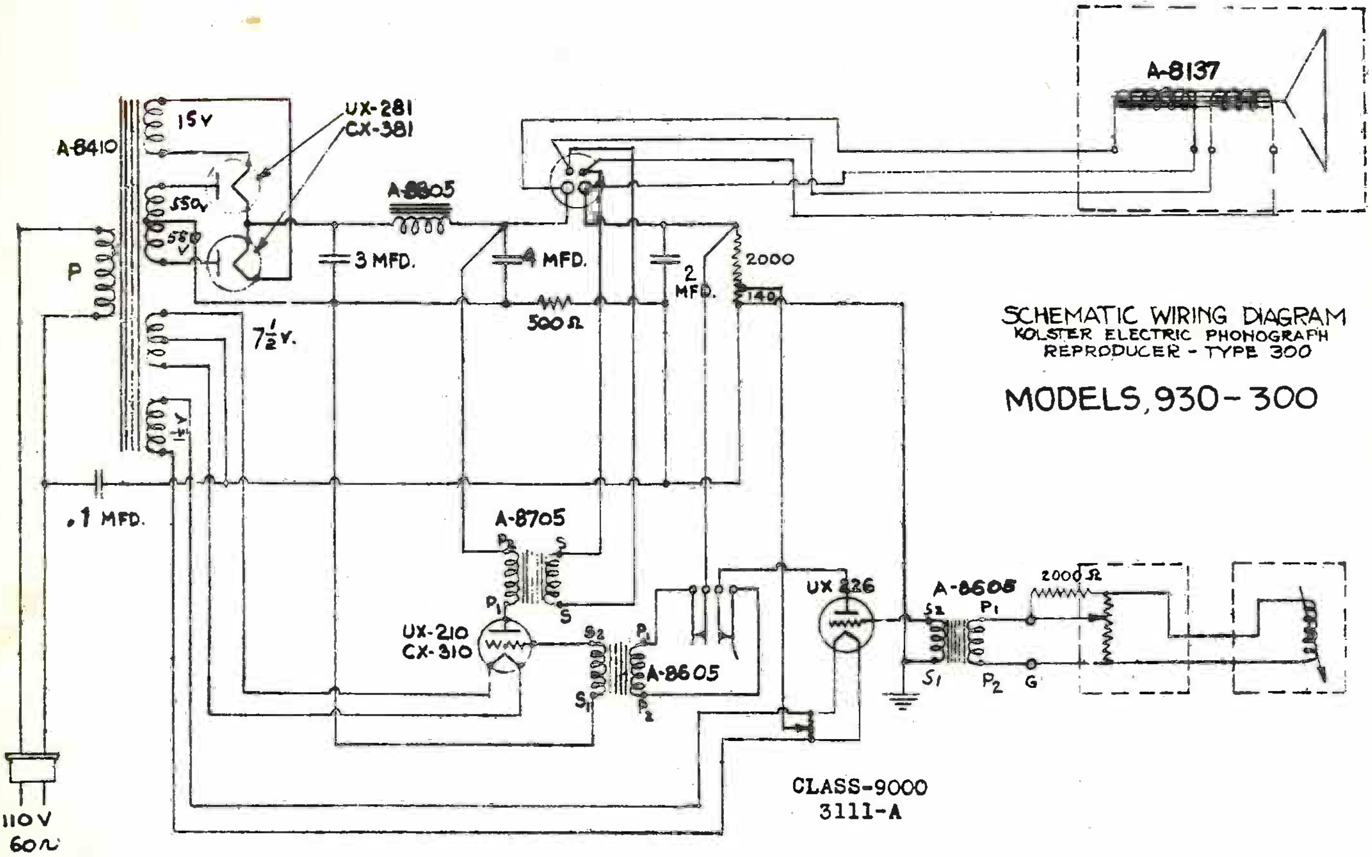

SCHEMATIC WIRING DIAGRAM
KOLSTER ELECTRIC PHONOGRAPH
REPRODUCER - TYPE 300

MODELS, 930-300

CLASS-9000
3111-A

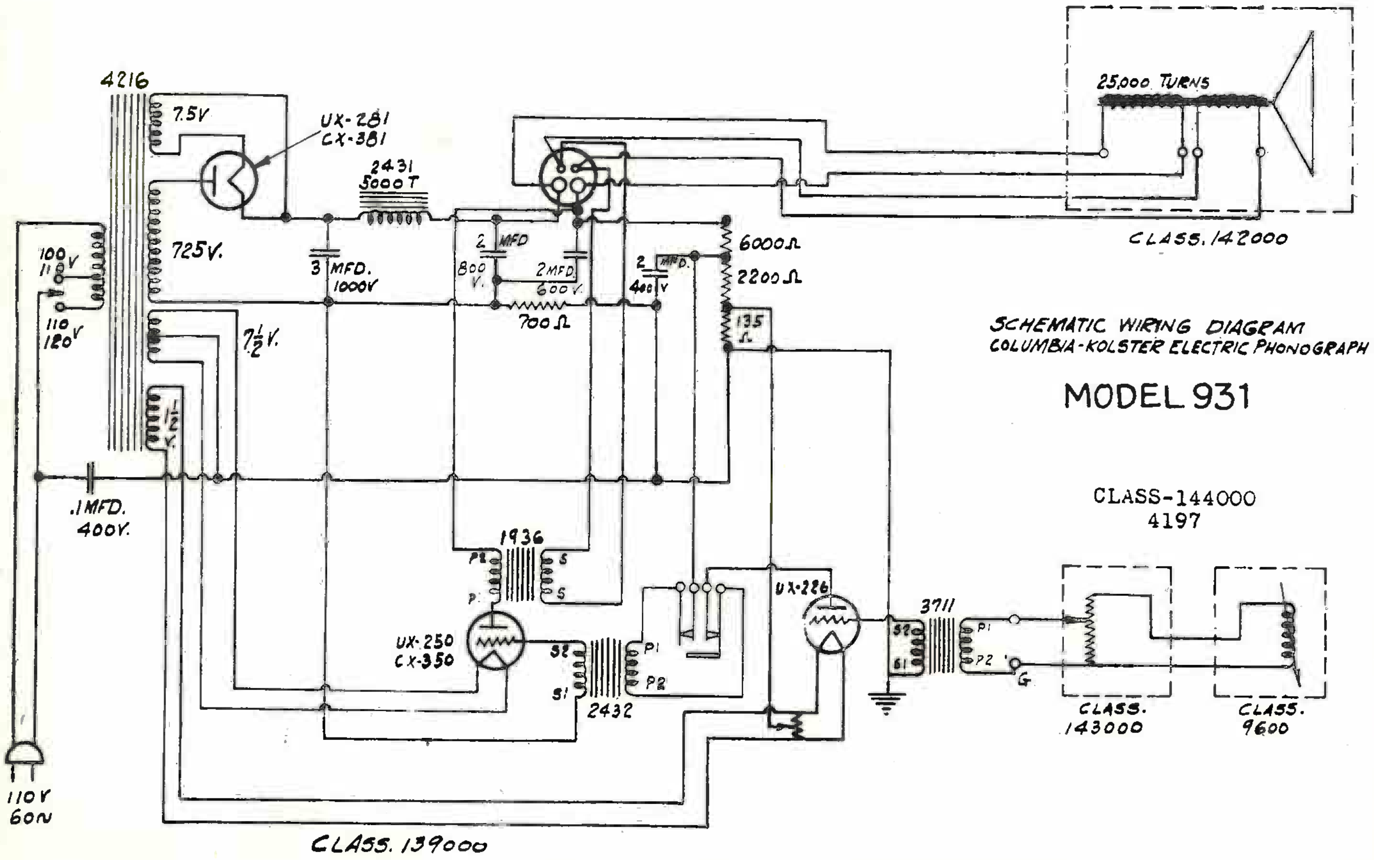

CLASS. 142000

SCHEMATIC WIRING DIAGRAM
COLUMBIA-KOLSTER ELECTRIC PHONOGRAPH

MODEL 931

CLASS-144000
4197

CLASS. 139000

COLUMBIA PHONOGRAPH CO.

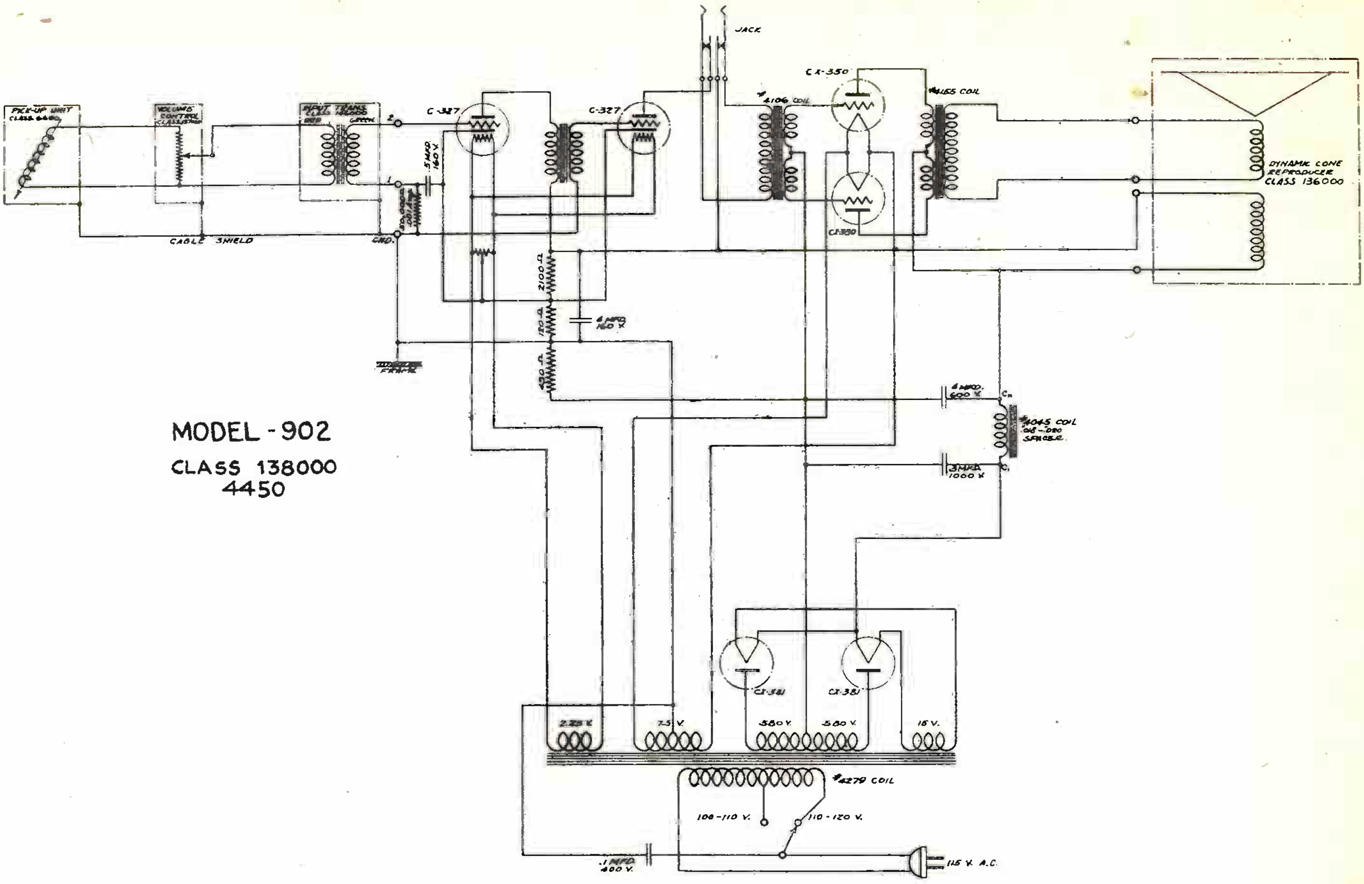

MODEL - 902

CLASS 138000
4450

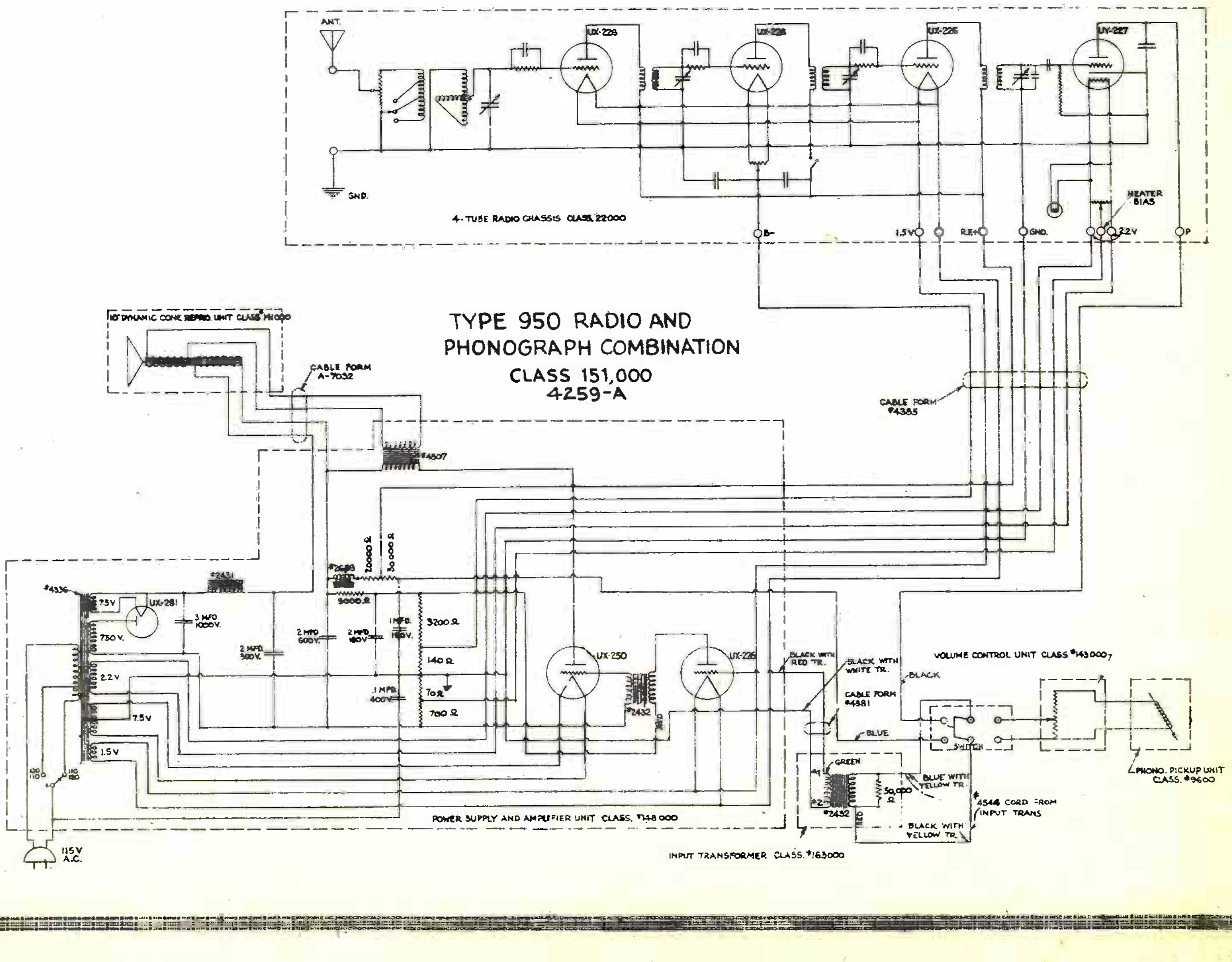

TYPE 950 RADIO AND
PHONOGRAPH COMBINATION
CLASS 151,000
4259-A

COLUMBIA PHONOGRAPH CO.

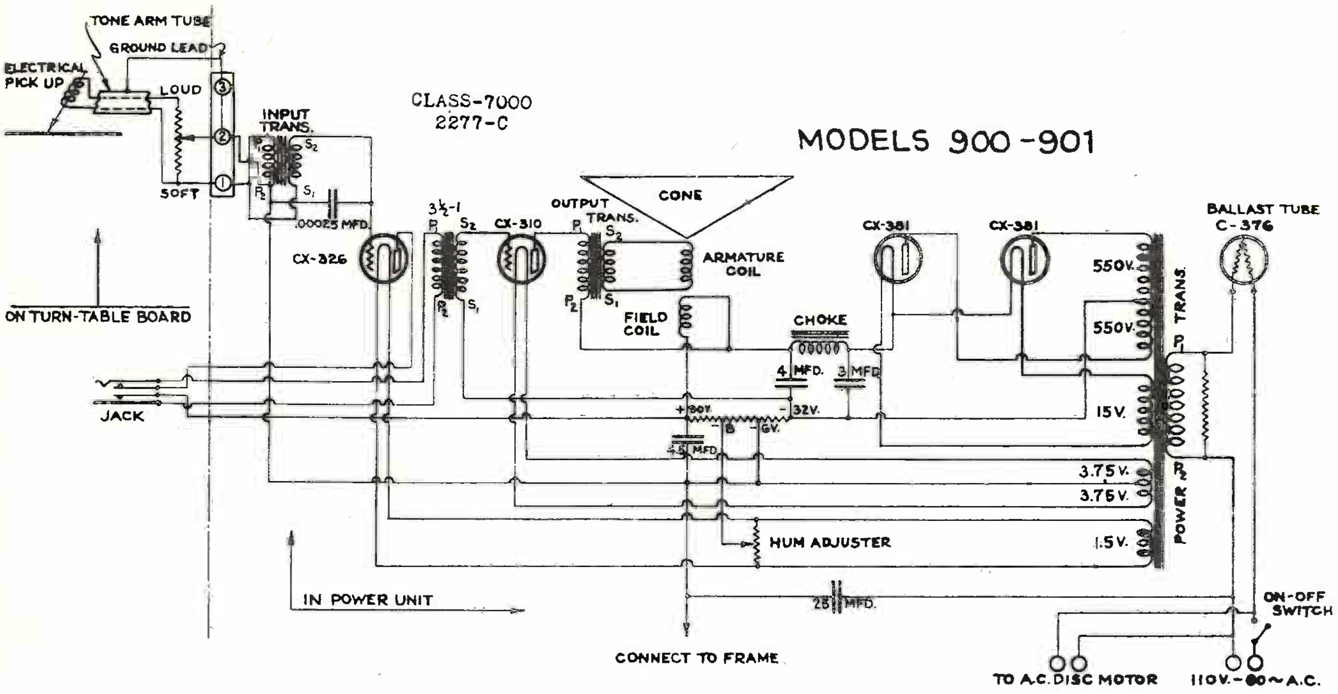

MODELS 900-901

CLASS-7000
2277-C

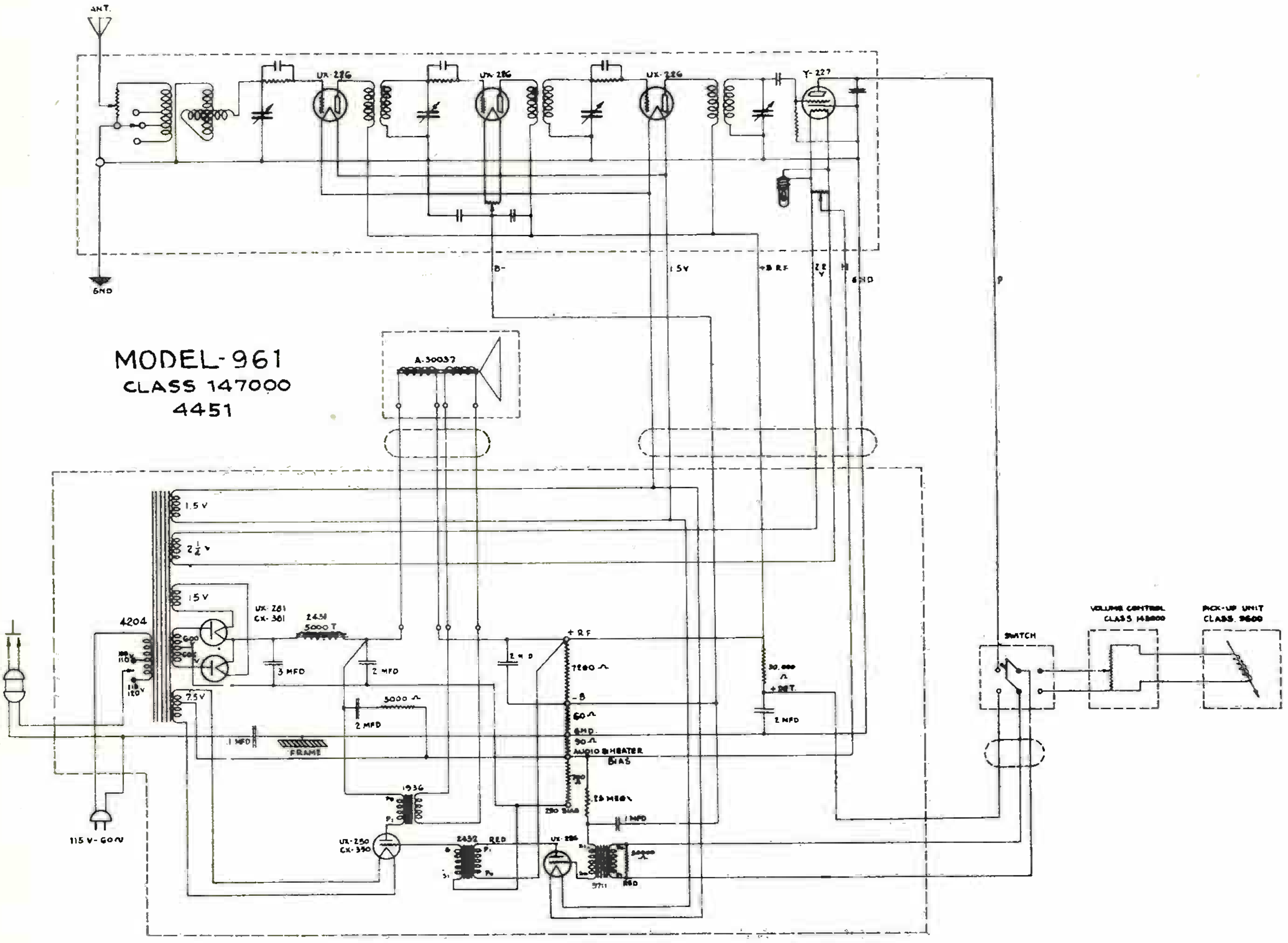

MODEL-961
CLASS 147000
4451

COLUMBIA PHONOGRAPH CO.

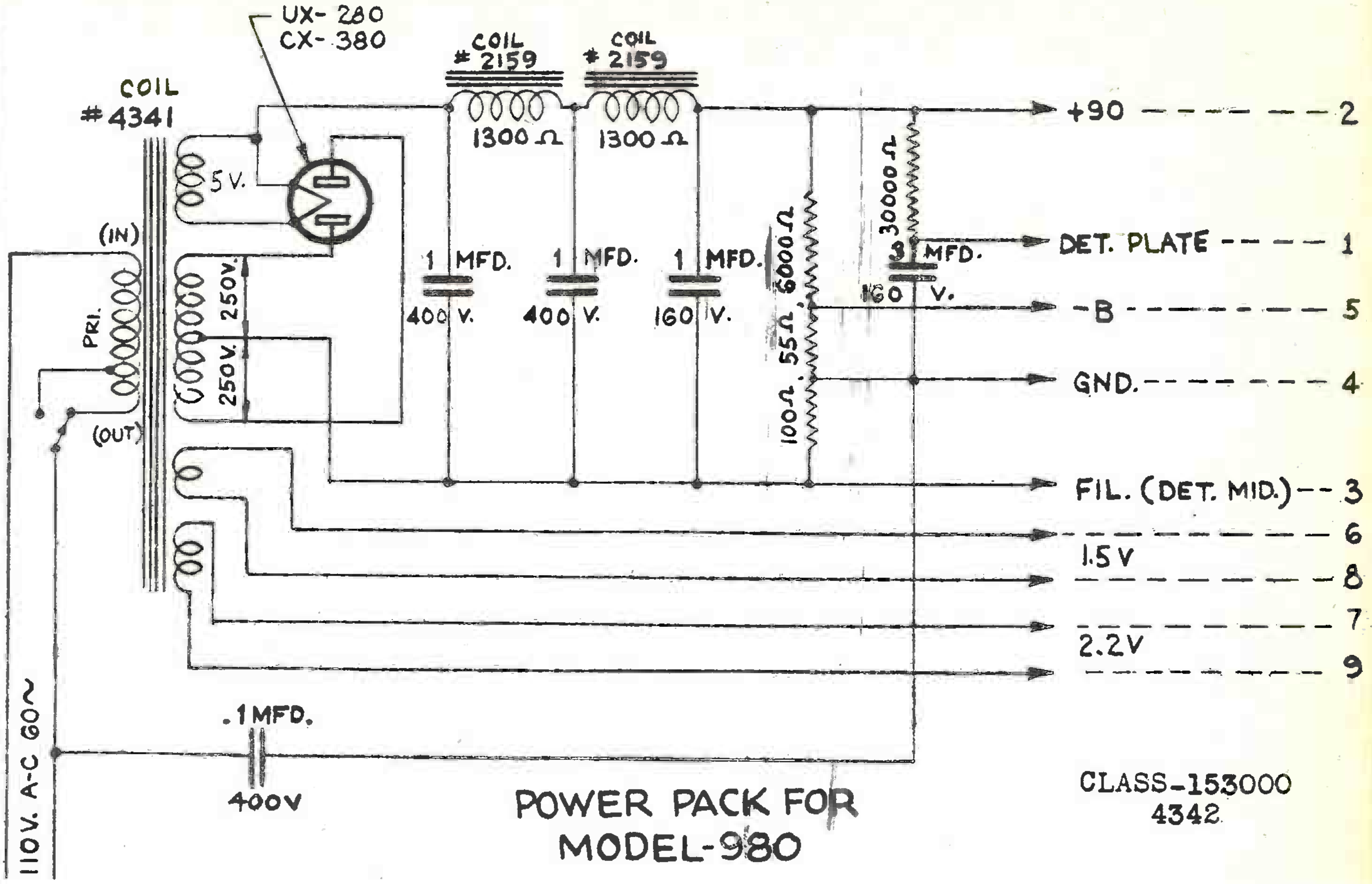

POWER PACK FOR
MODEL-980

CLASS-153000
4342

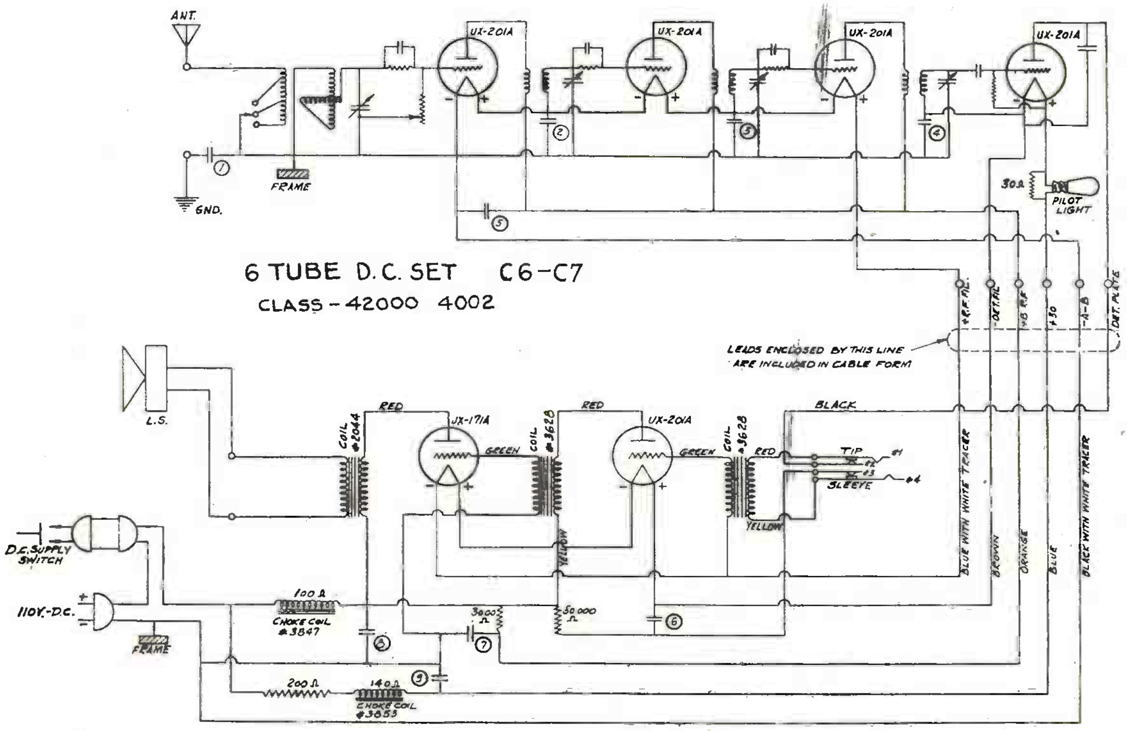

6 TUBE D.C. SET C6-C7
CLASS - 42000 4002

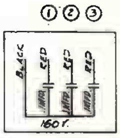

SCHEMATIC OF CONDENSER# 3968

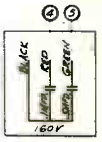

SCHEMATIC OF CONDENSER# 3882

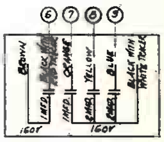

SCHEMATIC OF CONDENSER# 3844

COLUMBIA PHONOGRAPH CO.

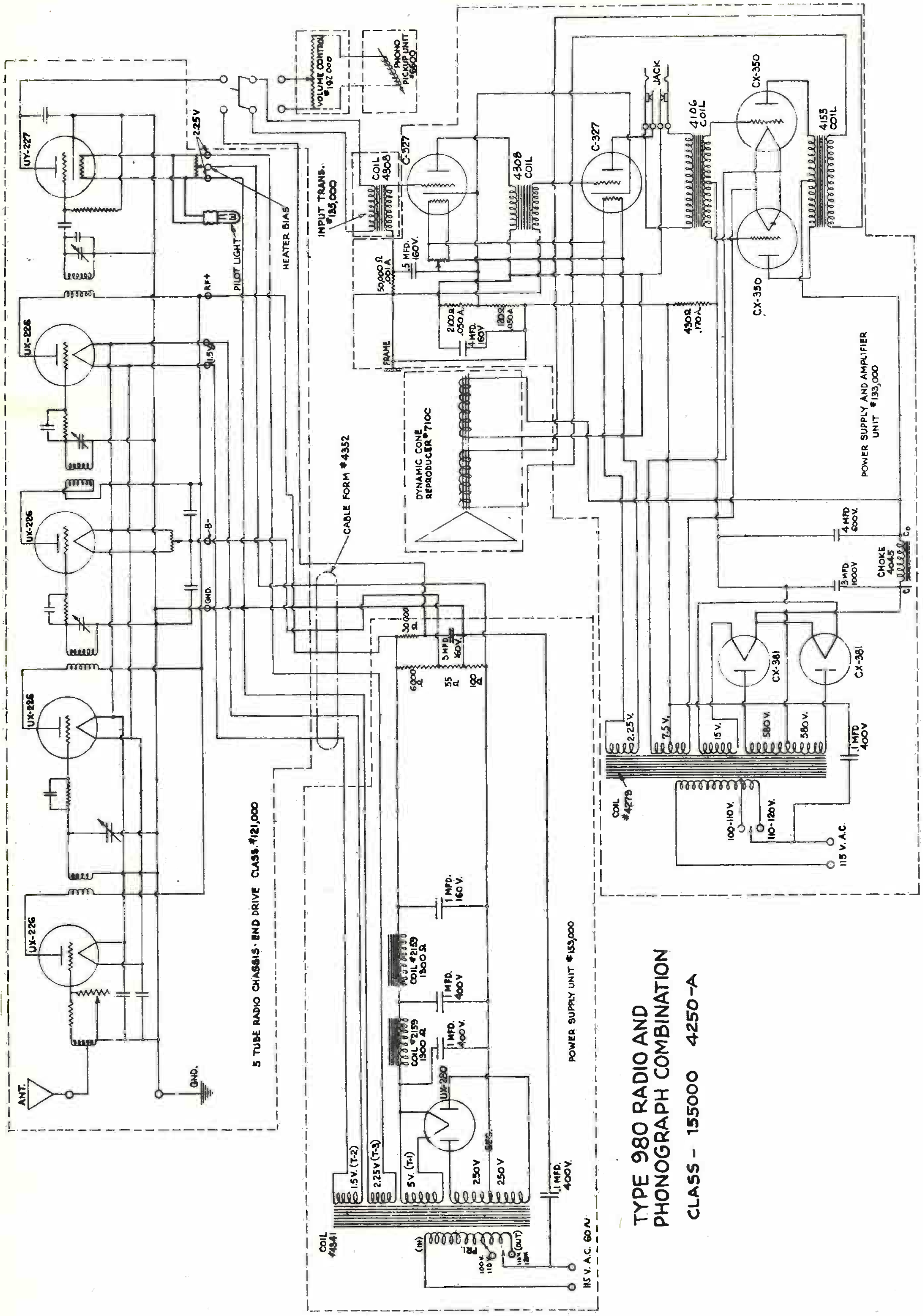

TYPE 980 RADIO AND PHONOGRAPH COMBINATION

CLASS - 155000 4250-A

COLUMBIA RADIO CORP.

COLUMBIA SCREEN GRID-8

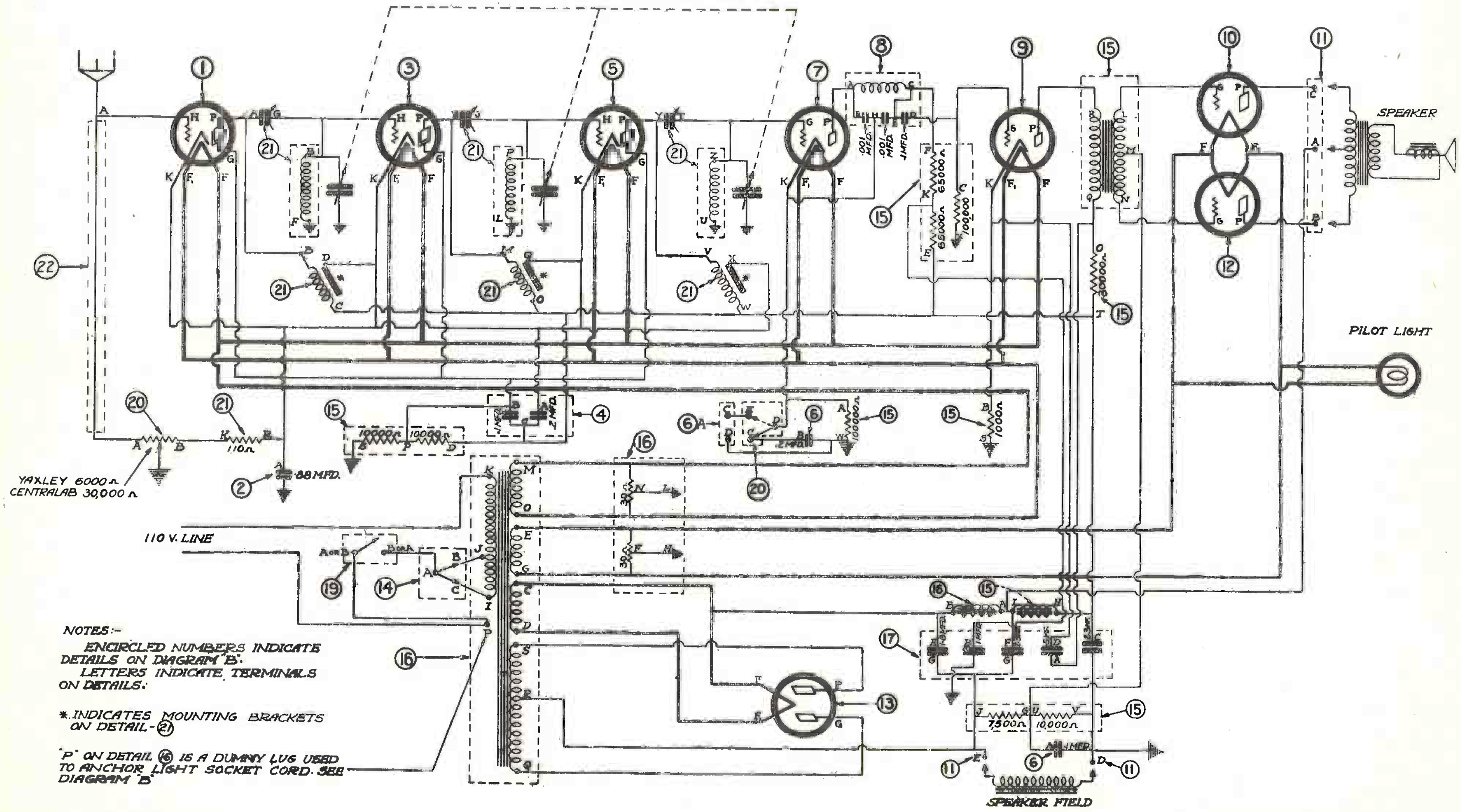

NOTES:-

ENCIRCLED NUMBERS INDICATE DETAILS ON DIAGRAM "B".

LETTERS INDICATE TERMINALS ON DETAILS.

*. INDICATES MOUNTING BRACKETS ON DETAIL-㉑

"P" ON DETAIL ⑯ IS A DUMMY LUG USED TO ANCHOR LIGHT SOCKET CORD. SEE DIAGRAM "B"

CONTINENTAL RADIO CORP.

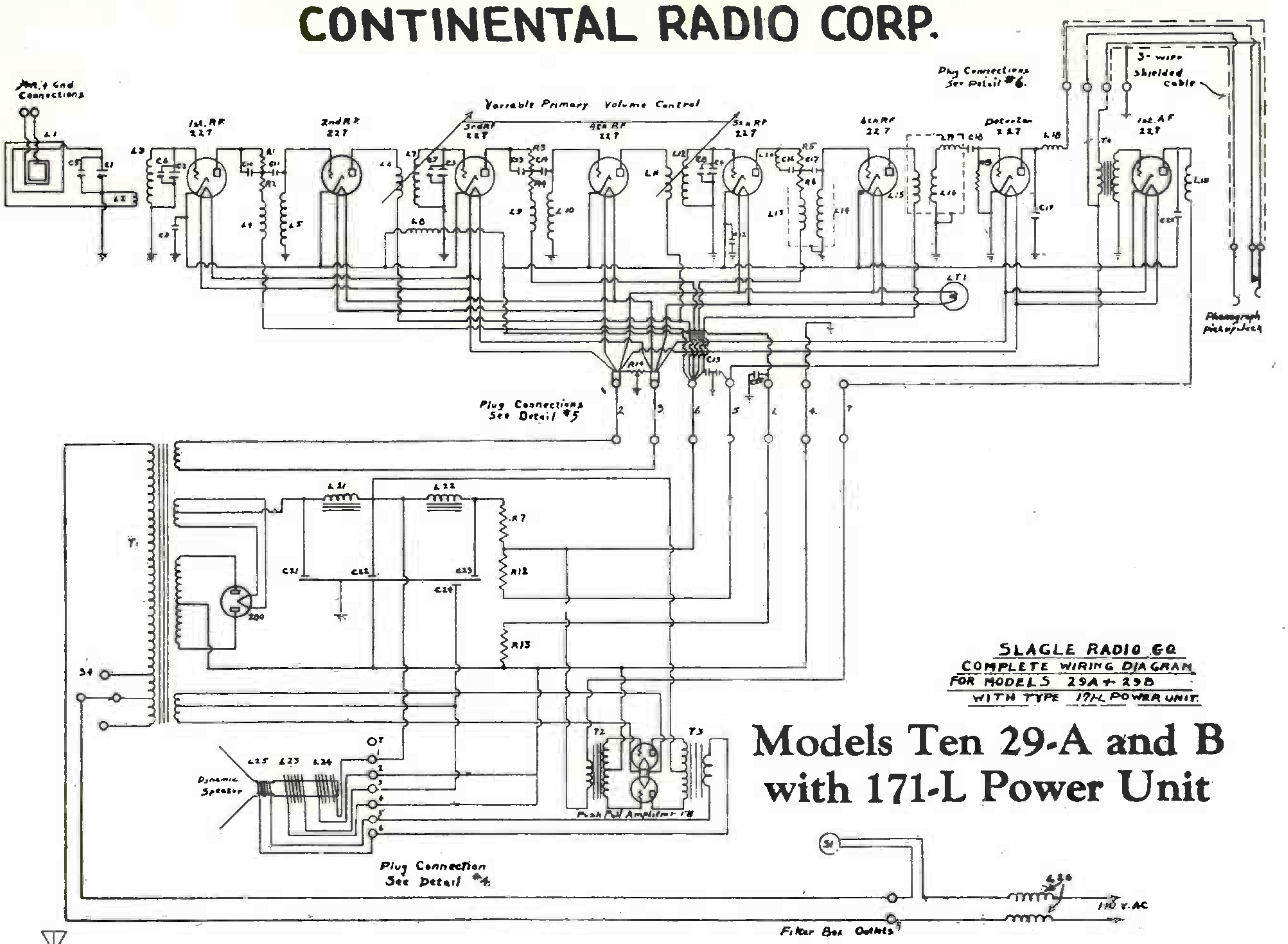

SLAGLE RADIO CO.
COMPLETE WIRING DIAGRAM
FOR MODELS 29A + 29B
WITH TYPE 171L POWER UNIT.

Models Ten 29-A and B with 171-L Power Unit

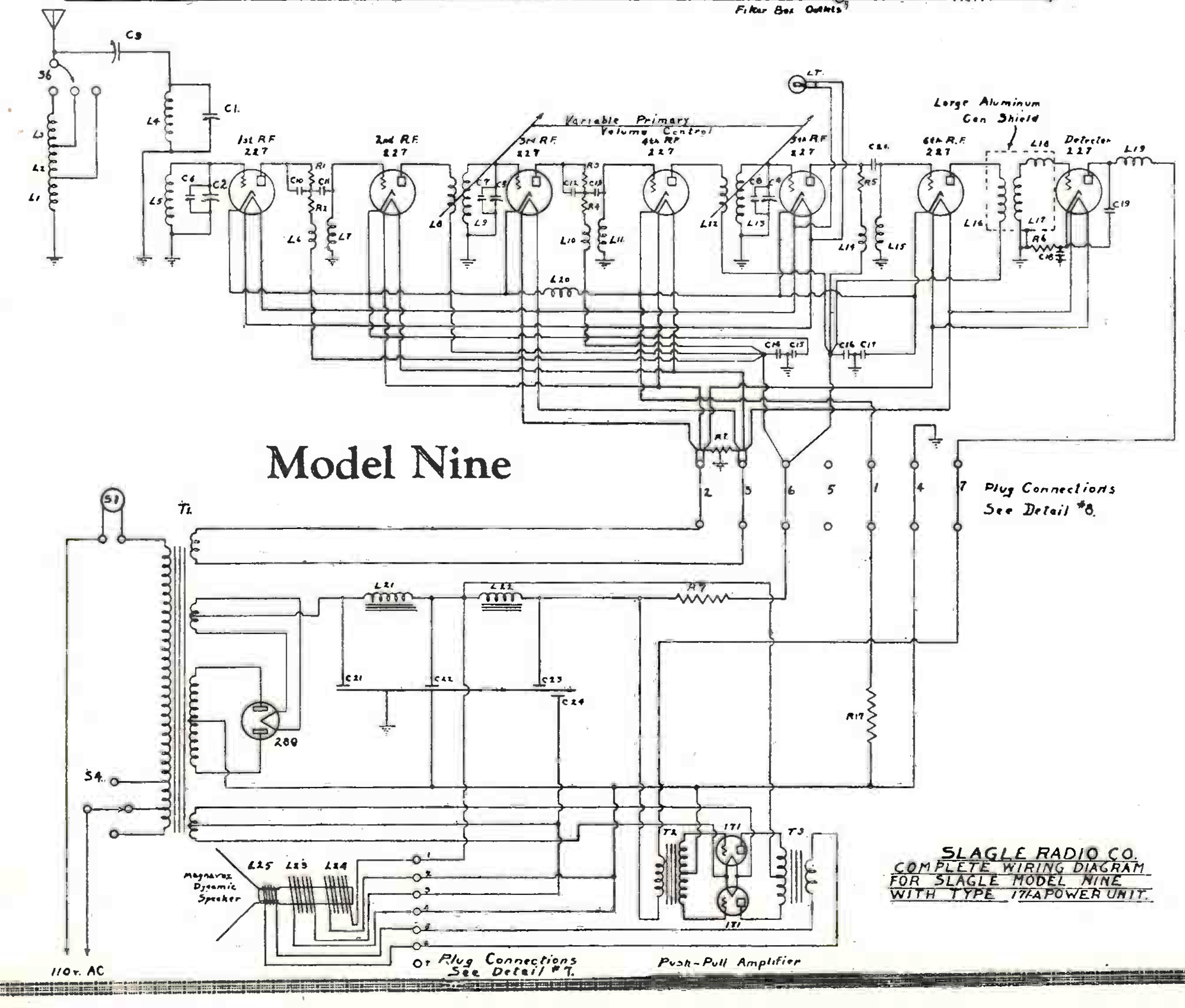

Model Nine

SLAGLE RADIO CO.
COMPLETE WIRING DIAGRAM
FOR SLAGLE MODEL NINE
WITH TYPE 171-A POWER UNIT.

CONTINENTAL RADIO CORP.

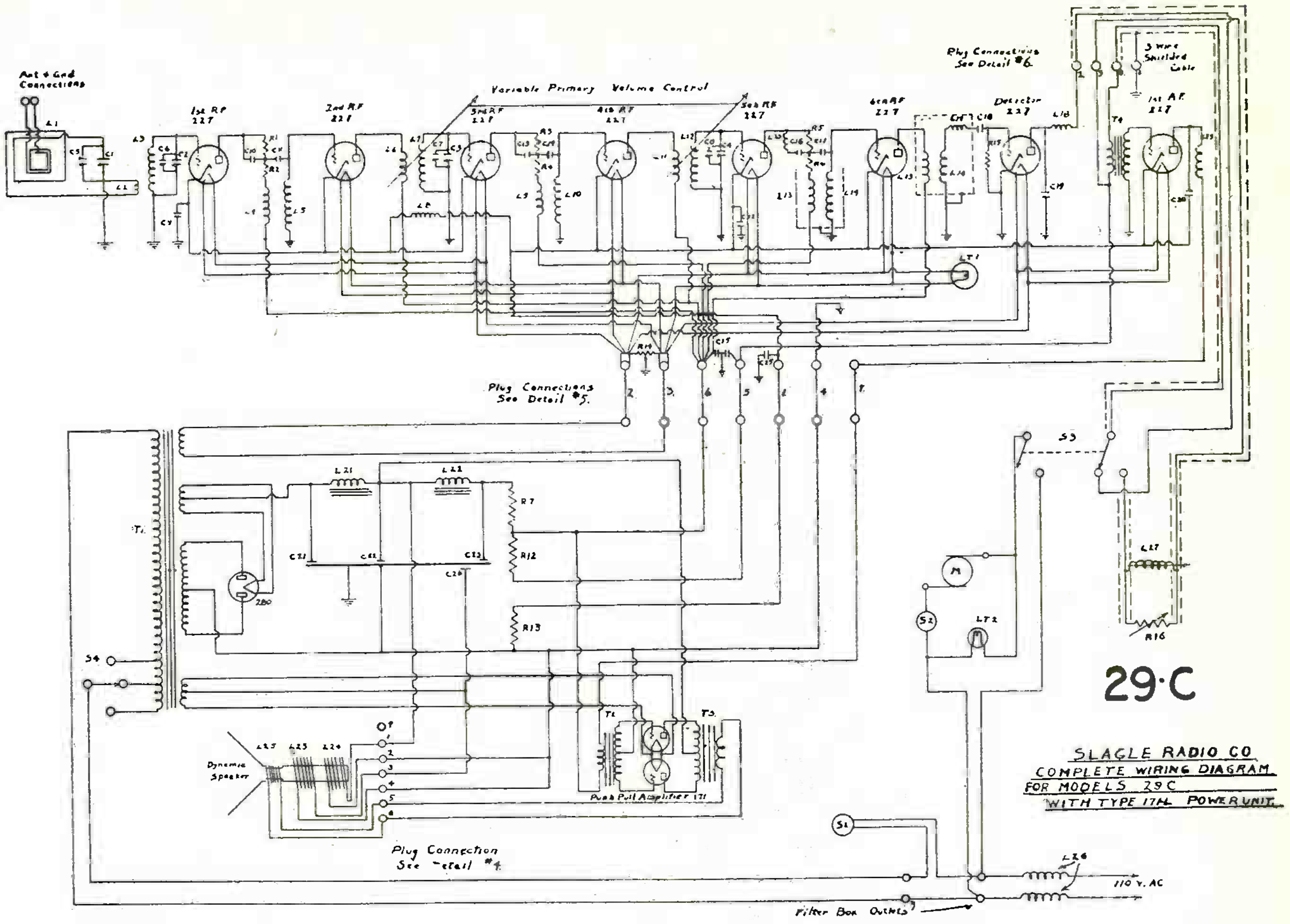

29·C

SLAGLE RADIO CO
COMPLETE WIRING DIAGRAM
FOR MODELS 29 C
WITH TYPE 171-L POWER UNIT.

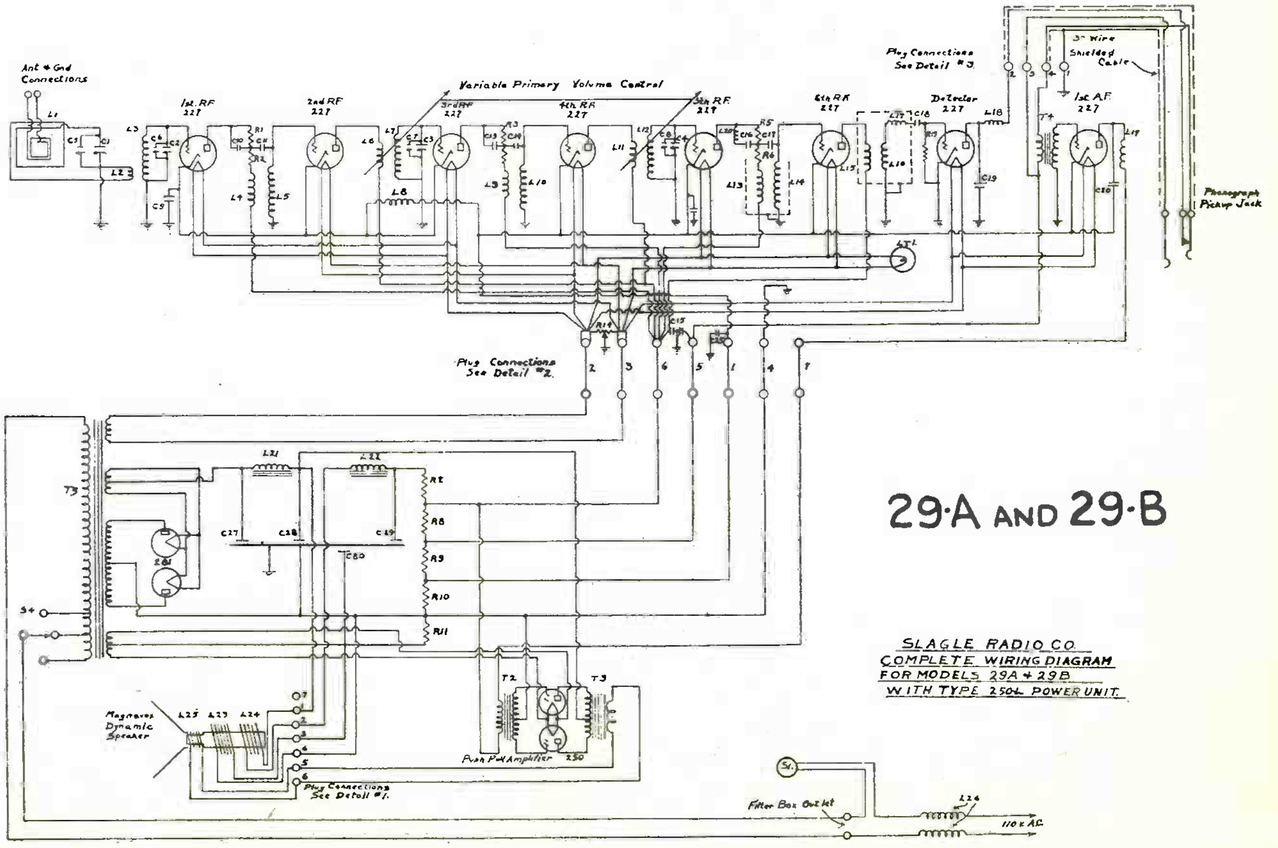

29·A AND 29·B

SLAGLE RADIO CO.
COMPLETE WIRING DIAGRAM
FOR MODELS 29A + 29B
WITH TYPE 250-L POWER UNIT.

CONTINENTAL RADIO CORP.

Ten 29-D and C with 250-L Power Unit

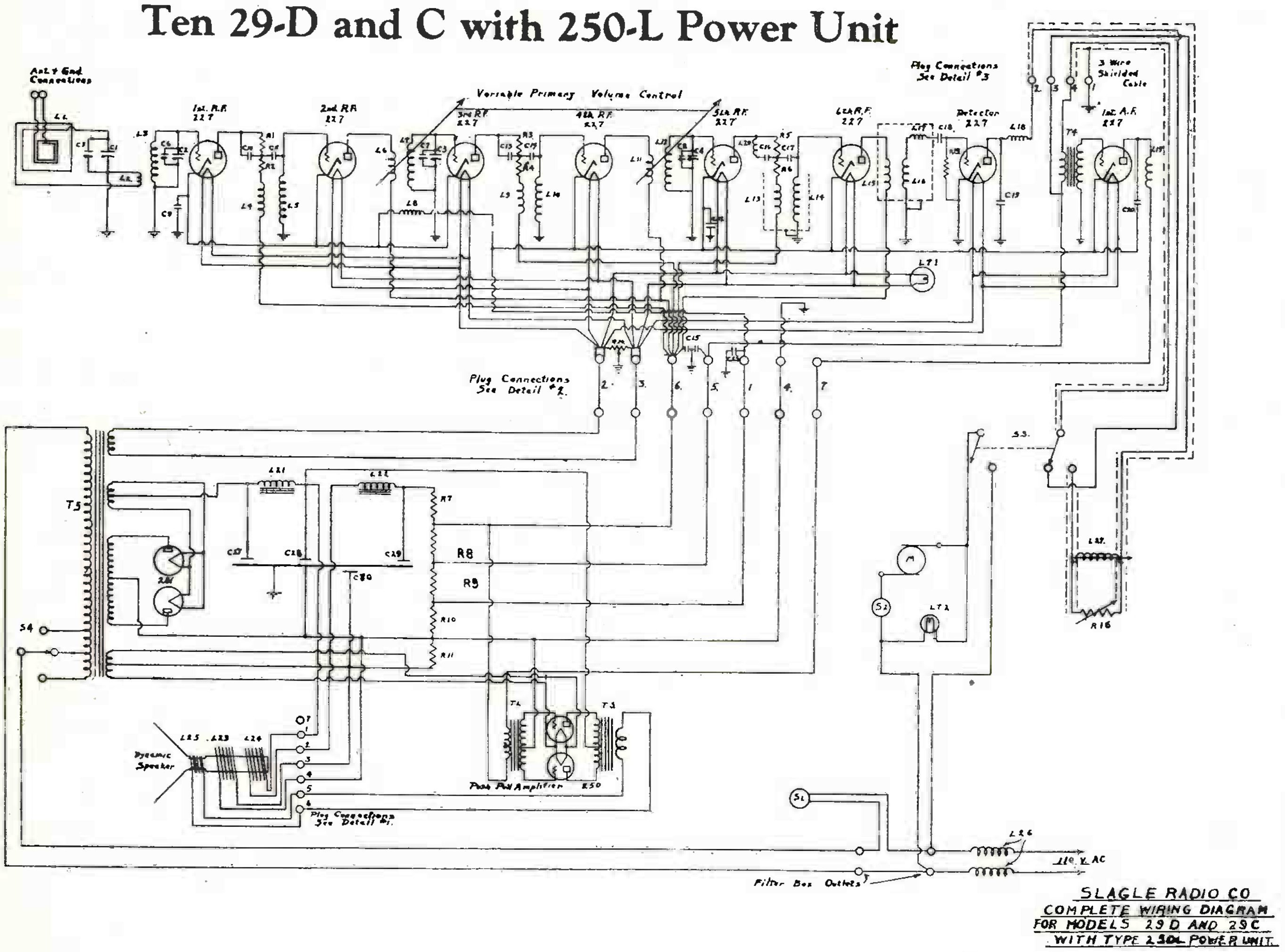

Models 29-A, 29-B, 29-C and 29-D

Circuit Diagram Specifications

C-9	Cathode By-Pass Condenser	71	0.5 M.F.D.
C-10	Fixed Condenser	166	.0001 M.F.D.
C-11	Fixed Condenser	168	.00028 M.F.D.
C-12	Cathode By-Pass Condenser	71	0.5 M.F.D.
C-13	Fixed Condenser	166	.0001 M.F.D.
C-14	Fixed Condenser	168	.00028 M.F.D.
C-15	Plate By-Pass Condenser	64	1 M.F.D.—1 M.F.D.
C-16	Fixed Condenser	166	.0001 M.F.D.
C-17	Fixed Condenser	167	.00025 M.F.D.
C-18	Grid Condenser	167	.00025 M.F.D.
C-19	Plate By-Pass Condenser	951	.002 M.F.D.
C-20	Plate By-Pass Condenser	951	.002 M.F.D.
C-21	Filter Condenser Block	177	2 M.F.D.
C-22			4 M.F.D.
C-23			2 M.F.D.
C-24			3 M.F.D.
C-25	Cathode By-Pass Condenser	71	0.5 M.F.D.
C-26	By-Pass Condenser		1 M.F.D.
C-27	Filter Condenser Block	252	2 M.F.D.
C-28			4 M.F.D.
C-29			2 M.F.D.
C-30			3 M.F.D.

R- 1	Tapped Resistor	108	1500 ohms.
R- 2			1200 ohms.
R- 3	Tapped Resistor	108	1500 ohms.
R- 4			1200 ohms.
R- 5	Tapped Resistor	109	475 ohms.
R- 6			1500 ohms.
R- 7	Resistor	112	4100 ohms.
R- 8	Resistor	115	8330 ohms.
R- 9	Resistor	116	15,250 ohms.
R-10	Resistor	110	156 ohms.
R-11	Resistor	113	4250 ohms.
R-12	Resistor	117	16,665 ohms.
R-13	Resistor	111	180 ohms.
R-14	Hum Adjuster	92	6-ohm Potentiometer.
R-15	Grid Leak	169	1 Megohm.
R-16	Phonograph Volume Control	156	50,000 ohms variable.
R-17	Resistor	178	100 ohms.
R-18	Resistor	114	21,000 ohms.

CONTINENTAL RADIO CORP.

~ ALL MODELS ~

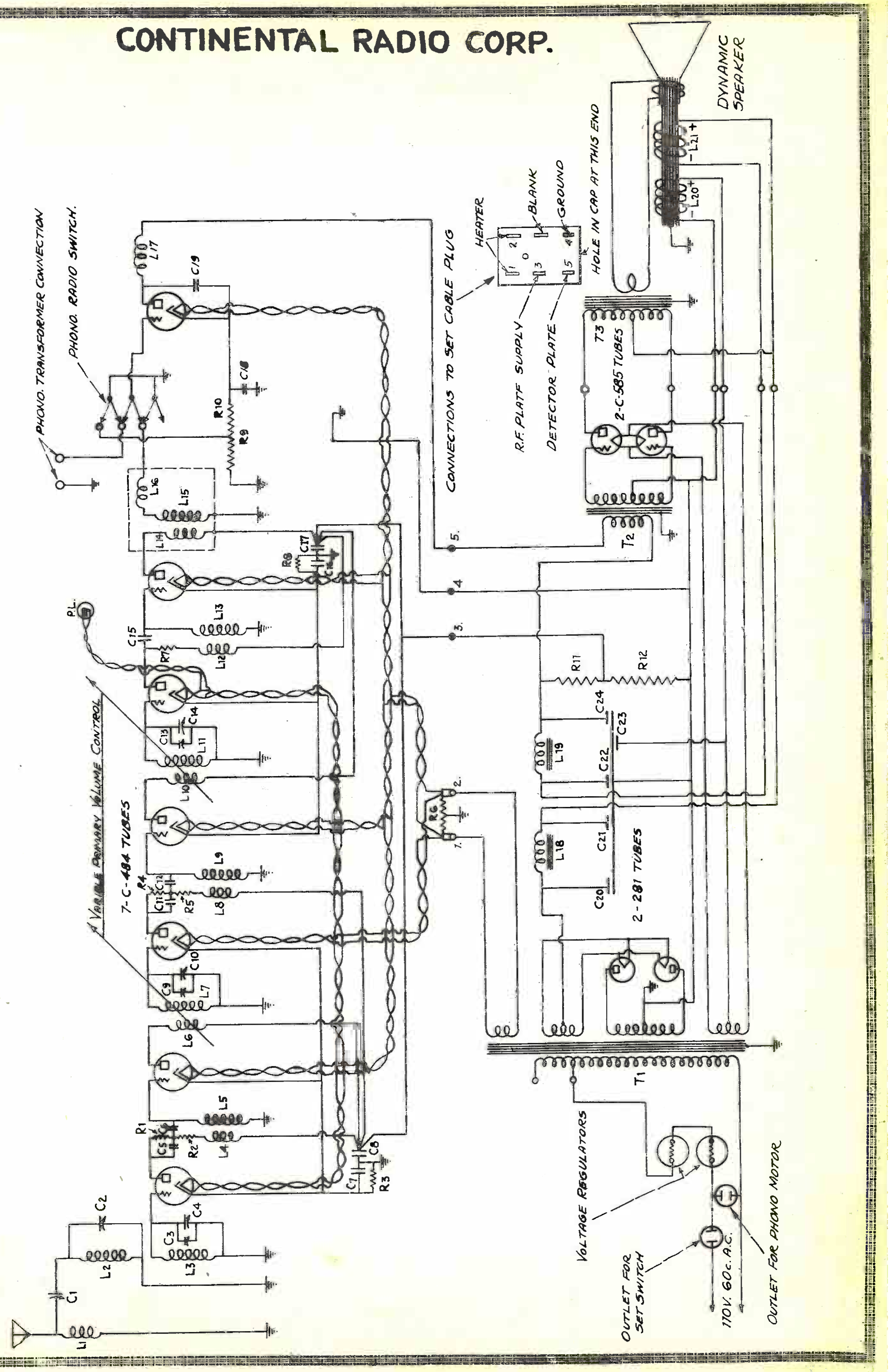

Radio Service Data Sheet

CROSLEY AC-7 AND AC-7C

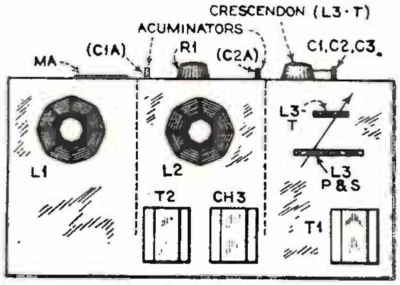

Approximate position of certain R.F. and A.F. units in the Crosley "AC-7" and "AC-7C" receivers. L3T is a tickler coil arranged for variable coupling to the primary and secondary inductances of L3. In this set, the filament supply for the battery-type tubes is obtained from the high-voltage output of the power pack.

This receiver employs one (first) stage of tuned "push-pull" R.F., a second stage of R.F. amplification (in which circuit oscillation is prevented by a "losser" resistor R12 of 750 ohms and the reversed tickler winding, T of L2), a regenerative detector, and the usual two stages of transformer-coupled A.F. amplification.

The tubes used are as follows: V1, V2, V3, V4 and V5, X-'99s; V6, '12; V7, BH-type gaseous rectifier. (The specified tubes must be used.) The filaments of the amplifier and detector tubes are connected in parallel, and the filament current is obtained from the rectifier V7 and high-voltage winding S1 of the power transformer PT. The manner of obtaining grid bias for these tubes is indicated in the detail circuit.

The constants of the components are as follows: R1, 700 ohms (variable); R2, 49 ohms; R3, 1,500 ohms; R4, 63 ohms; R5, 750 ohms; R6, 76 ohms; R7, 500 ohms; R8, 88 ohms; R9, 375 ohms; R10, 1000 ohms; R11, 500 ohms (center-tapped); R12, 750 ohms; R13, 8,750 ohms; R14, 90,000 ohms; R15, 2,400 ohms; R16, 500 ohms (variable). C6-R17 constitute the usual grid-condenser-and leak combination; C1 and C2, .00042-mf. (variable); C3, .00046-mf. (variable); C4, .06- to 1.0 mf.; C5, C8 and C9, 1.0 mf.; C7, .003-mf.; C10 and C12, 15 mf.; C11, 5 mf.; C13 and C14, 0.2-mf. A.F. choke Ch1 is rated at 50 henrys; Ch2, 15 h.; Ch3, 100 h. T1 and T2 have a ratio of four-to-one.

Condensers C10, C11 and C12 are contained in a single case and constitute the Mershon electrolytic condenser in one corner of the "ABC Supply Unit."

An insulating film on the plate of the Mershon condenser is built up at the factory; but this gradually breaks down if the receiver is not in use for some time. To build up a film on the plates the receiver is put into operation with all tubes in their respective sockets. At the start of the re-conditioning process, resistor R16 should be turned to extreme left, and resistor R1 set mid-way. Operate the set for ten minutes to half an hour, noting the current reading on the milliammeter MA; the value for correct operation of the set is between 55 and 60 milliamps. As the current increases, R16 should be adjusted to maintain this reading. A greater length of time than fifteen minutes is seldom required before the set begins to play well. If C10-C11-C12 is defective, the Mershon unit should be replaced.

As the filament supply of V6 is alternating, there is no polarity for the (white) supply leads.

Meter MA is polarized and each of its connection posts must be connected to the lead wire, from the set, directly below it.

The tertiary (third) winding T of L2 is a fixed negative feed-back coil used to prevent oscillation in the circuit of V3, while the winding T of L3 is a variable positive feed-back or regeneration coil; the latter is called the "Crescendon" control. C1 and C2 are shunted by the balancing condensers C1A and C2A, which are controlled from the panel and termed the "Acuminators"; C3A, in shunt to C3, is adjusted from the bottom of the chassis.

R2, R4, R6, R8 and R10 are biasing resistors.

If the A.C. line voltage is low, the fuse should be changed over from the pair of clips at the right (in which position it is shipped) to the left pair (as seen from the control-knob end of the power unit.)

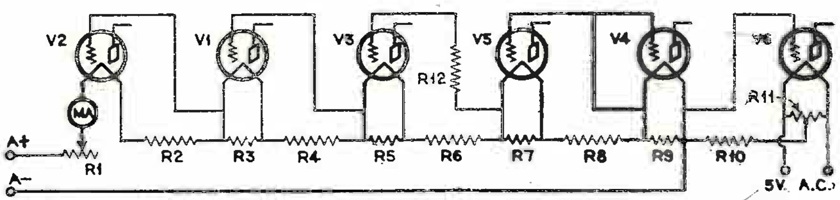

Grid-bias voltages for one type of Crosley receiver are derived from resistors in the "A" circuit, as this illustration shows. The milliammeter Ma is provided to indicate when, through adjustment of R1, the correct current is being supplied to the filaments of the tubes.

Condenser C4 completes the R.F. circuit, while at the same time it insulates the D.C. circuits of V1 and V2. If C1, C1A, or C4 short-circuit, the filament of V1 will not light.

Hum in the "AC-7" receiver may be due to an open in one side of hum-balancer R11, or to an open in one or both buffer condensers (C13-C14).

First, however, determine whether the leads to the electrolytic condenser are making good contact.

Special care must be taken to insure that the proper tubes are in the sockets designated for them.

Ch1 and Ch2 are mounted above the electrolytic condenser in the power unit. With the electrolytic condenser at the left and V7 at the right, Ch1 is at the rear and Ch2 is mounted in front of it. The buffer condensers are mounted below V7.

Since the arrangement of the circuit of this receiver is unusual, it is necessary to give care and attention to details when servicing. A wrong value for a replacement unit will change the voltages across the various resistors. The line-voltage should be determined if Ma seems to read too high.

A '71 tube should not be substituted at V6, or the rectifier will be overloaded. However, this or a larger tube may be used if it is included in a separate power unit; an adapter, or a change in circuit wiring, is then required in order to transfer the output of V5 to the external power tube.

The power unit, contained in a metal case, is designed to supply "A" current only for type '99 tubes—except at V6, which is marked "UX-112"—and only in the manner shown in the diagram. For this reason it must not be connected to a set in which the tubes are wired differently; or where the filament requirements are different.

If the "A" current drops to 20 to 35 milliamps, despite all adjustments, and considerable hum is noticed, try another tube in place of V7.

Ch3 together with C8, is designed to eliminate interference due to line pick-up of outside disturbances.

The shunts across the filaments of V1, V3, V4 and V5 help to by-pass the "B" current, which must go through the filament circuit in completing the "B" current supply circuit.

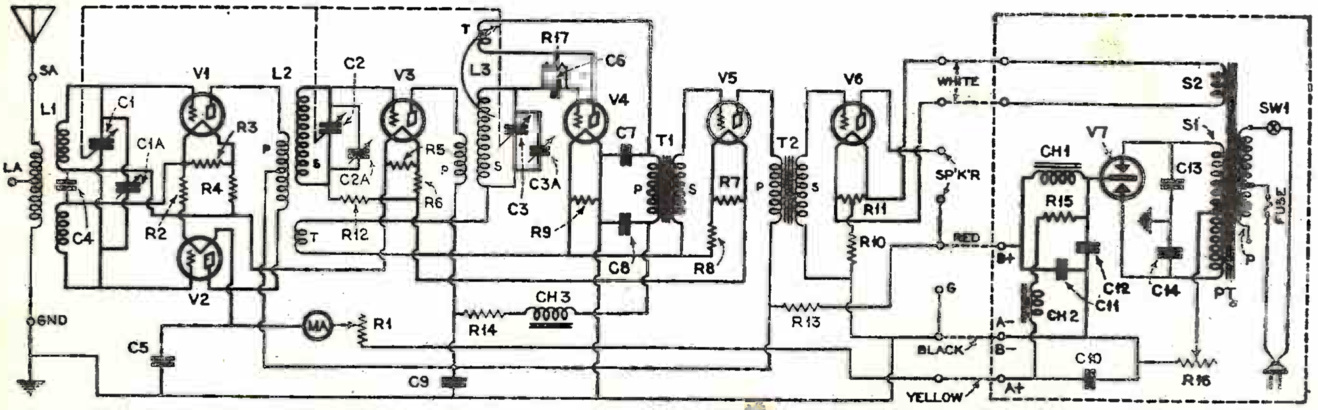

Schematic circuit of the Crosley "Models AC-7" and "AC-7C" radio receivers. A novel arrangement may be noted in the push-pull R.F. input; L1 (although in two sections mechanically) is equivalent to a center-tapped inductance. In fact, if it were desired to obtain grid bias from a separate battery, it would not be necessary to use other than a center-tapped coil. The circuit of V3 is neutralized, while detector V4 is arranged to be regenerative.

CROSLEY RADIO CORP.

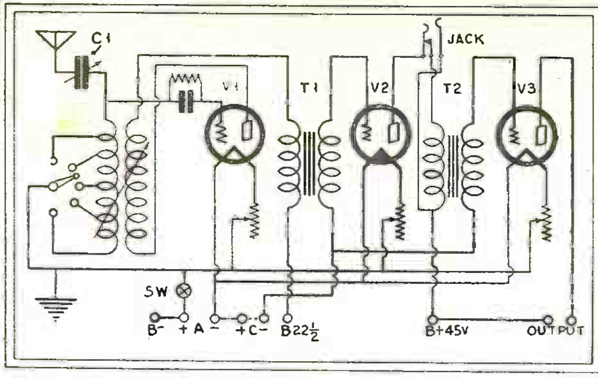

Above, the schematic of the Crosley "Model 3B" and 3C," which, like the "Type V," uses a variocoupler in the two-circuit regenerative detector stage.

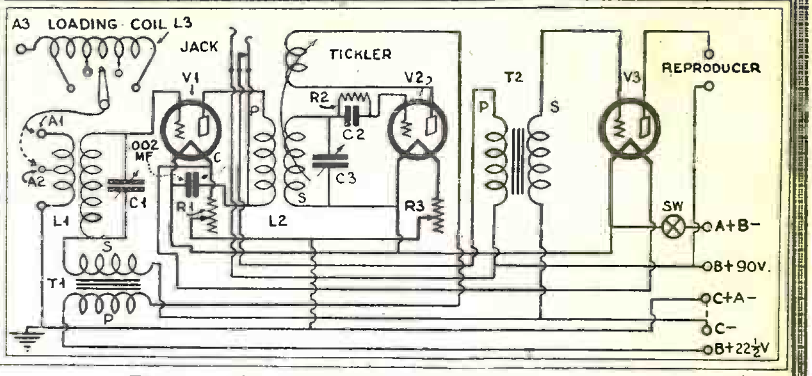

The famous Crosley "Trirdyn" (Model 3R3) which incorporates a reflexed stage of R.F. and first A.F. Unlike earlier models, this receiver used a condenser with meshing rotor plates.

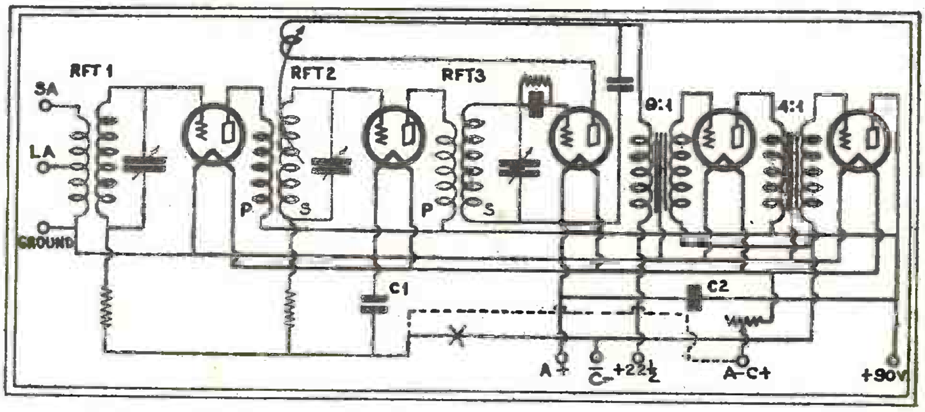

The Crosley "5-38" tuned radio-frequency receiver, battery model, at one time a very popular receiver, obtained exceptional sensitivity by the use of controlled regeneration: Feed-back was obtained through RFT2, instead of RFT3, as with most regenerative circuits. Dotted lines indicate the grid returns of early-production models of the set wherein a "C" battery was not used.

← Plate 1st tube to trans (thru tickler coil to transformer) blocked to 2nd tube A+ by small condenser

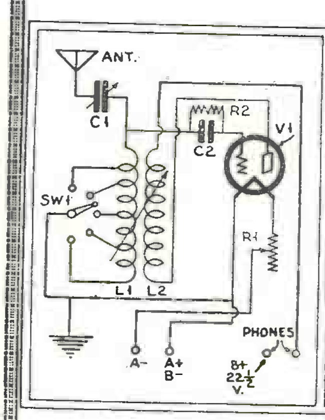

The single-tube Crosley "Type V"; the red tickler lead runs to the plate of the tube.

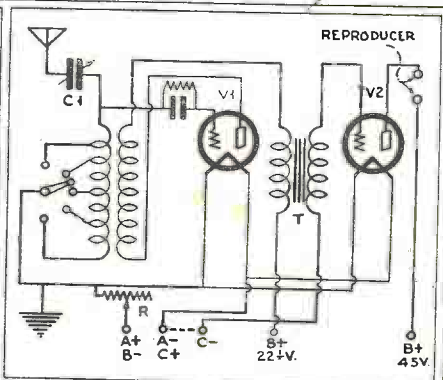

The Crosley two-tube "Model 51," in which there is a "C" lead for the single stage of A.F. amplification. Replacing C1 with a .0005-mf. condenser will increase the tuning range.

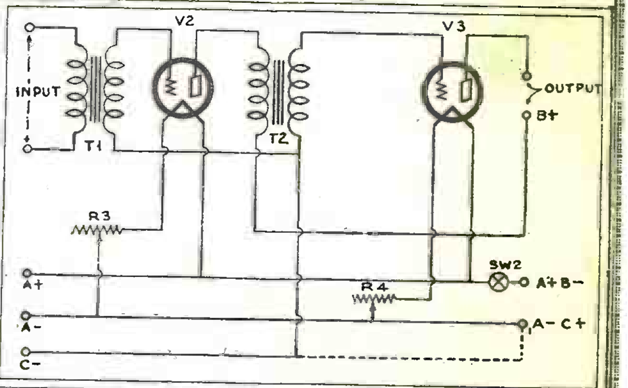

This two-stage Crosley A.F. amplifier was designed for use with the single-tube "Type V" tuner diagrammed at the left. The "B—22½" double post of the tuner affords a connection with the battery and across the primary of T1.

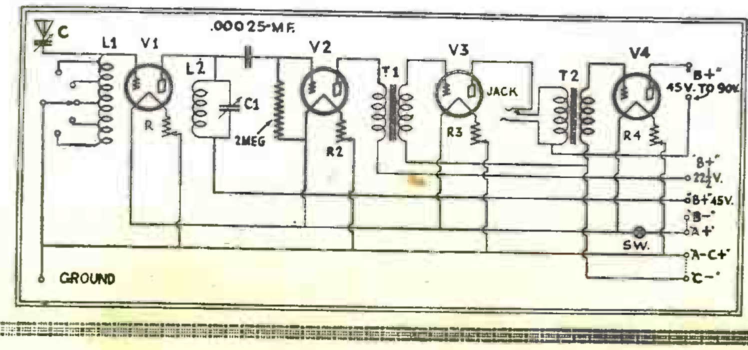

In the Crosley "Model XI" (and "XL") a stage of impedance-coupled R.F. amplification precedes the non-regenerative detector. Note that the antenna coupler L1 is without the adjustable coupler of previous models.

CROSLEY RADIO CORP.

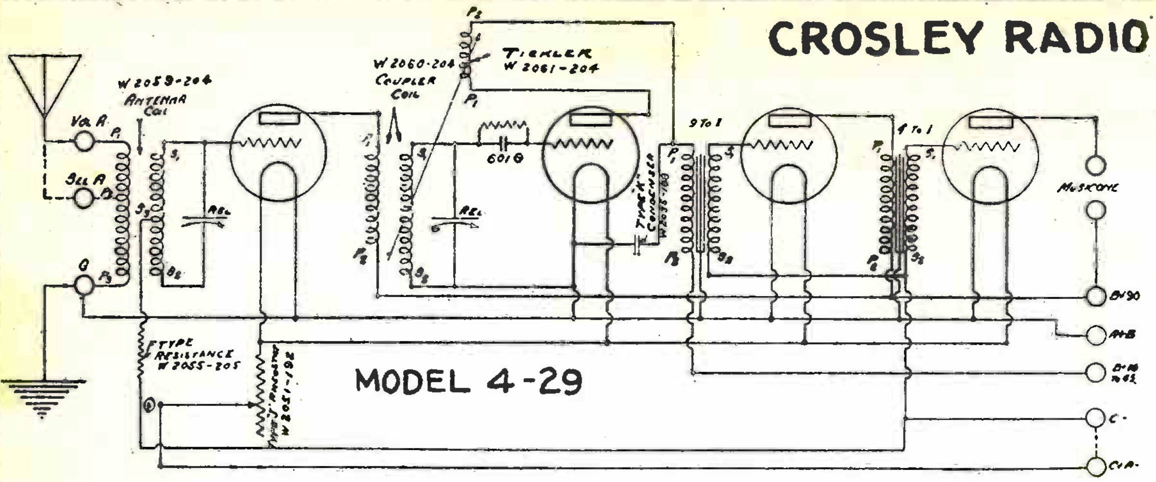

MODEL 4-29

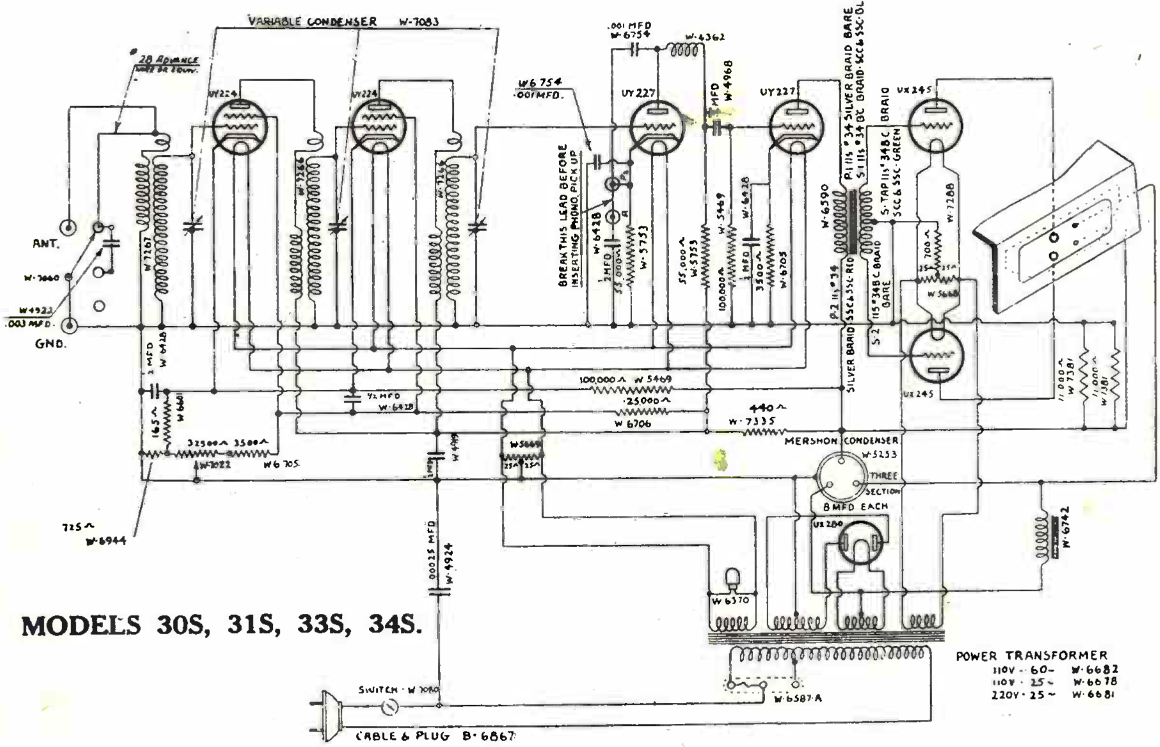

MODELS 30S, 31S, 33S, 34S.

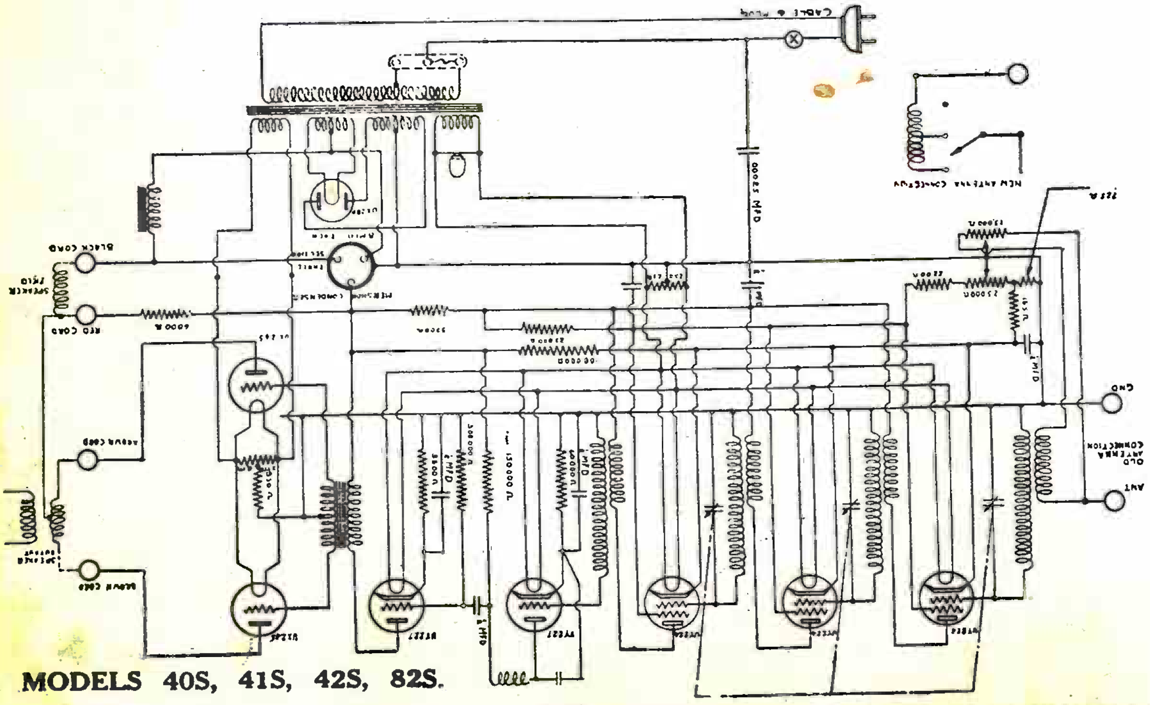

MODELS 40S, 41S, 42S, 82S.

CROSLEY RADIO CORP.

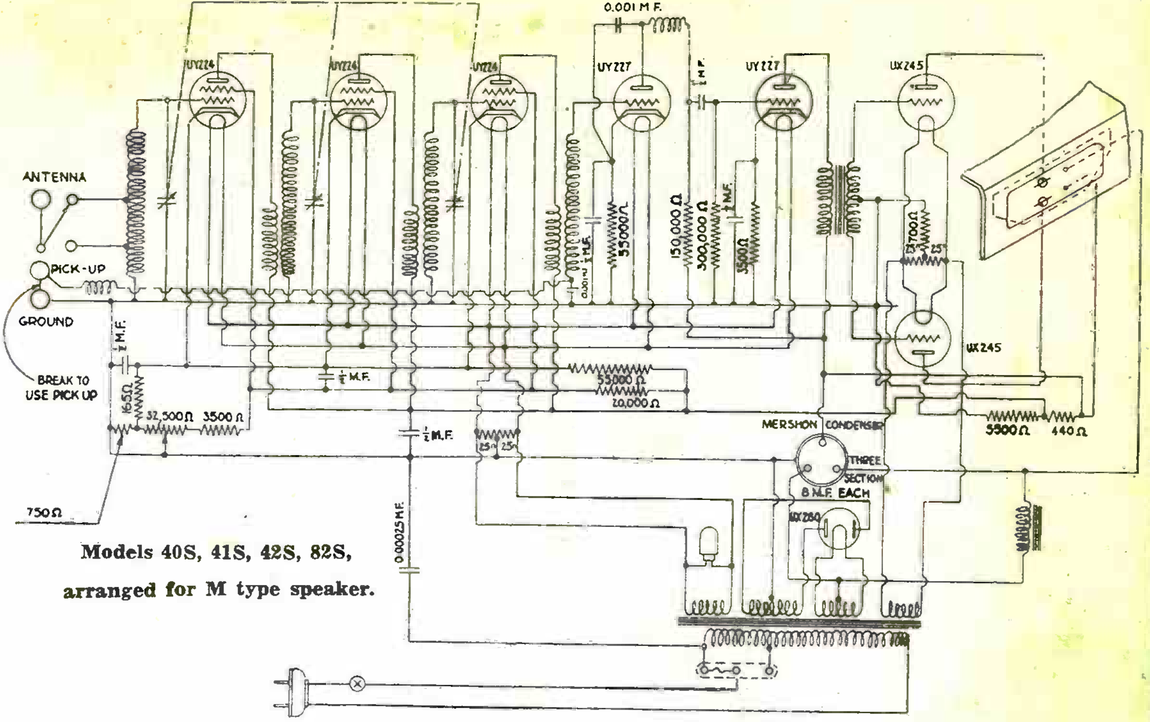

Models 40S, 41S, 42S, 82S, arranged for M type speaker.

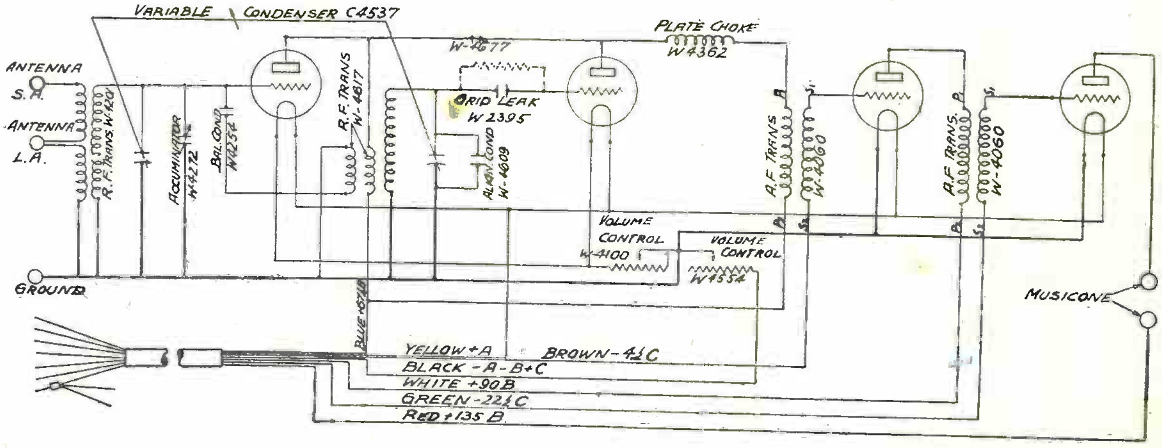

CIRCUIT, MODEL 401

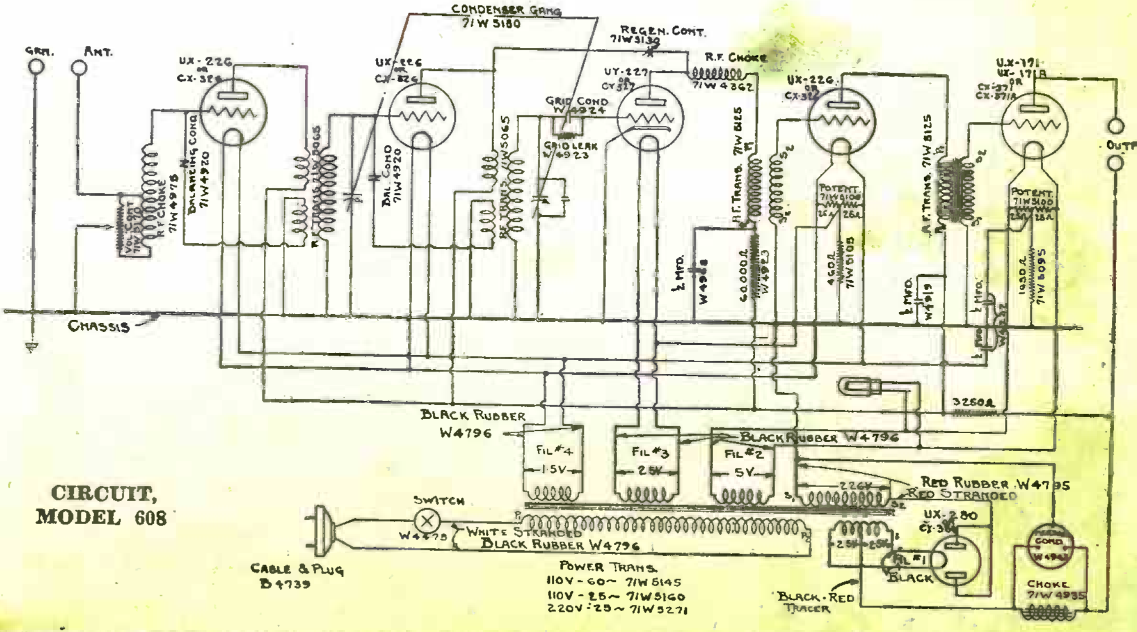

CIRCUIT, MODEL 608

CROSLEY RADIO CORP.

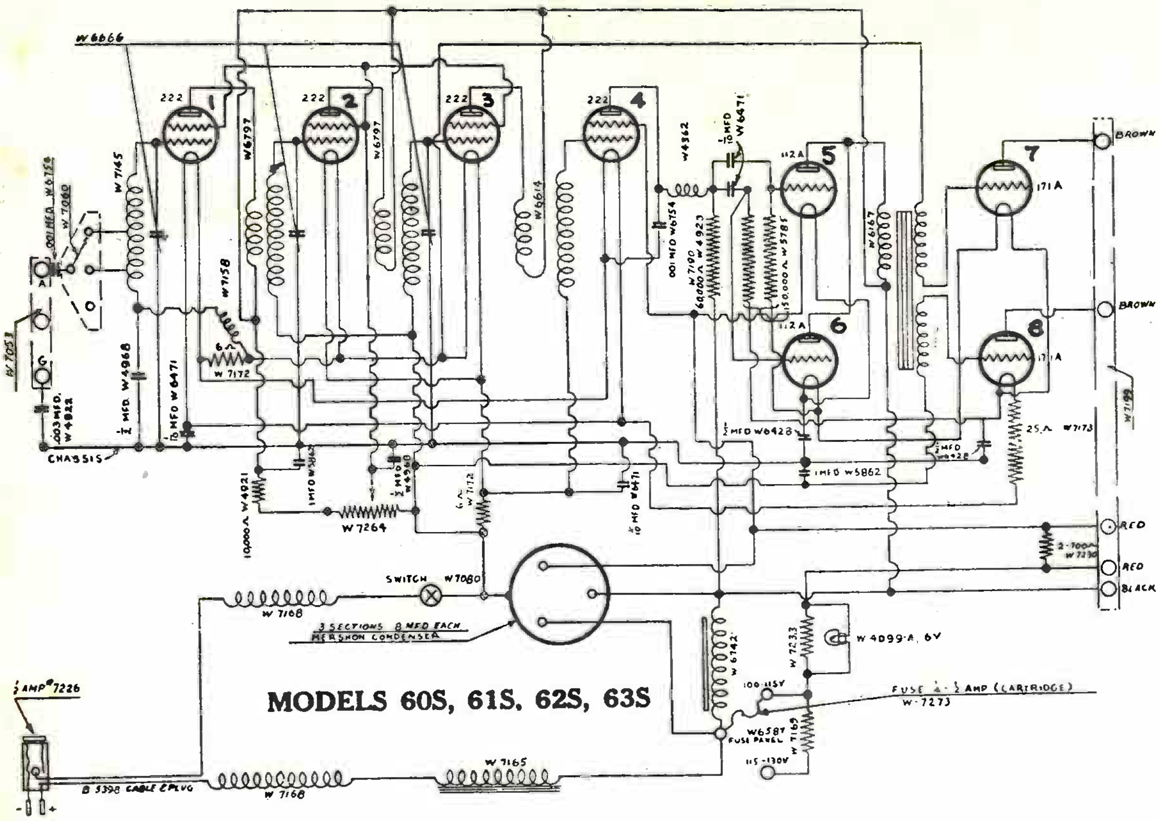

MODELS 60S, 61S, 62S, 63S

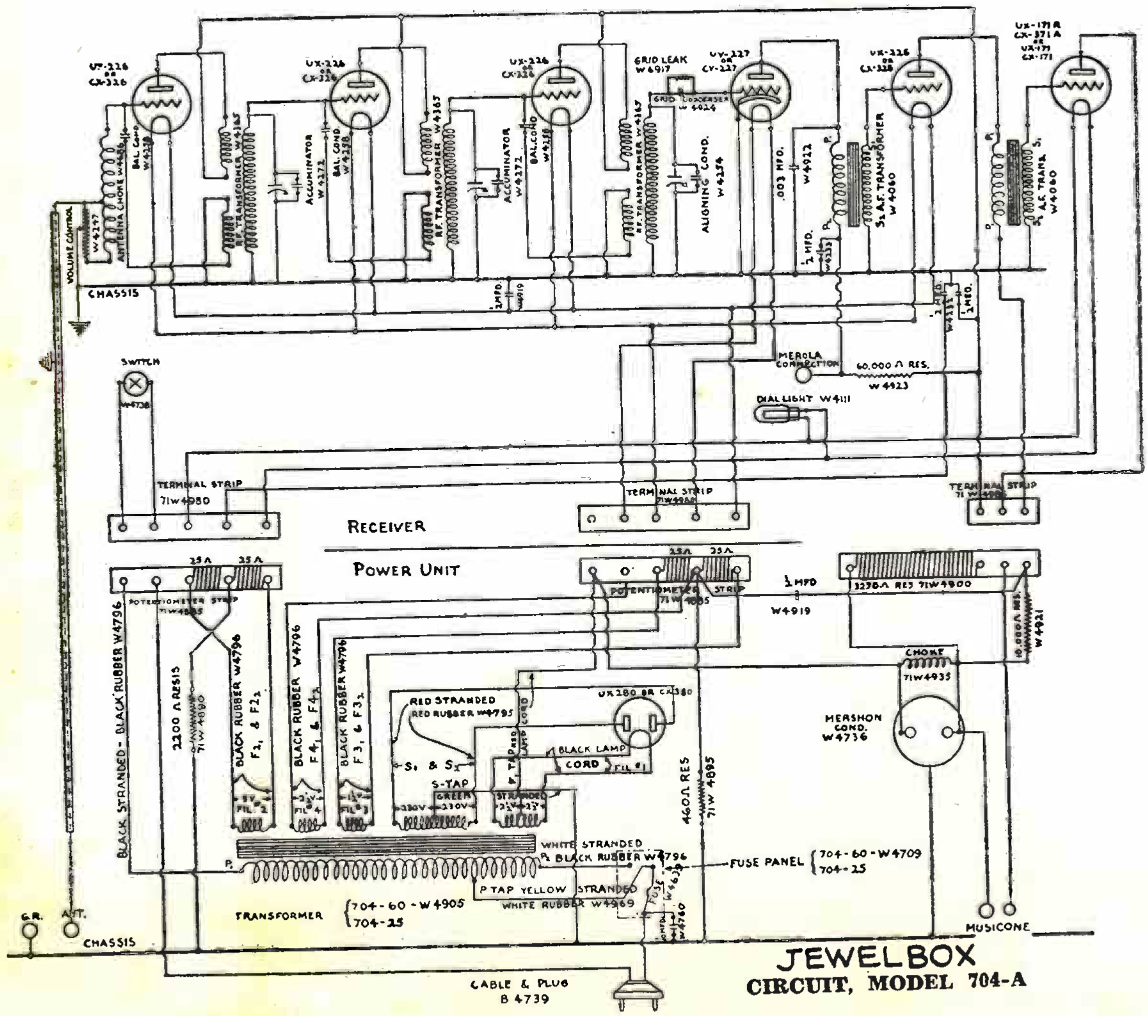

JEWELBOX
CIRCUIT, MODEL 704-A

Radio Service Data Sheets

CROSLEY MODEL 601

The circuit used in this receiver incorporates the Hazeltine neutralization system. Tubes V1 to V5 are '01As; V6 may be either a '12A or '71A, the latter being preferable. To take chassis from "can," remove the three knobs; remove the escutcheon by taking out the drive screws; remove two cap screws in front and two in rear, using socket wrench or pliers; raise rear of case until it clears coil shields; then slide the case forward until it clears the shafts of the tuning controls; and lift off. A total antenna-and-lead-in length of 50 to 100 feet is recommended, except where a shorter length reduces interference. For best results, ground must be connected to only one point, the ground binding post. Connection to the "A" battery may result in burning out a resistor; if set is being tested in the service shop, care must be taken that *only one ground connection is made to the set.* Study of the schematic circuit will show why this is necessary. The volume control regulates the filament current of the first three tubes; the "acuminators," or trimming condensers, resonate the secondary circuits of V2, and V3; the variable capacity in shunt with the tuning capacity in the grid circuit of V4 is an "aligning" condenser which is adjusted at the factory and has no panel control. To balance receiver, leave bottom attached, balancing with case on or off. Tune to a strong signal near 210 meters (using headphones at output) and insulate filament of V3. Insert long-shank No. 4 socket wrench (insulated handle) through balance-condenser hole in chassis (third from left, as seen from front). Tune set for loudest response and balance for minimum signal *with wrench removed.* Repeat operation with V2, using second balance condenser from left; following to V1 and balance condenser at extreme left. The "aligning" condenser is directly in front of V4. To adjust, tune to strong local with "acuminators" at about middle setting; remove V3 and tune receiver until maximum signal is heard, adjusting right acuminator as required. Insert socket wrench on aligning condenser and adjust for maximum signal, *with wrench removed.* Replace tube and adjust right acuminator for maximum signal, slightly changing setting of station selector if necessary. Acuminator should then be at or slightly above middle position. To replace R.F. transformer, remove case and bottom from receiver. With set upside down, remove the two nuts holding copper can to chassis over coil to be replaced, and lift off can. Unsolder R.F.T. leads and remove two nuts holding R.F.T. to chassis. Solder leads to lugs and replace can. If necessary to replace a tuning condenser, remove case as described, also underside chassis nuts holding condenser shield to bottom of chassis, and remove two screws on front panel holding shield in place. Press shield gently back until it clears the top edge of the front panel, raise vertically, and remove. Unsolder leads and loosen screw which controls belt tension. Remove belt from condenser pulley and remove pulley. Take out three screws attaching condenser to front panel, and remove condenser. Attach new one to front panel by three screws provided and replace pulley and belt, tightening latter. Solder leads and replace shield. Note that it is necessary to remove indicator dial, pulley and both belts if center condenser must be replaced. To remove this indicator dial, or to replace belts, take out three screws attaching indicator dial to center pulley and remove dial. Loosen screws which control tension of belts and take off belts. Put new belts in position with drive pins on pulleys through holes in belts. Tighten tensioning screws. To replace detector by-pass condenser, or grid-leak-and-condenser mounting, unsolder leads, remove supporting screws, place new unit in position and resolder leads. A 3-megohm grid leak is recommended.

Color Code

Black "A—," "B—," "C+";
Blue "B+45";
White "B+90";
Red "B+Power";
Brown "C—4½";
Green "C—Power";
Yellow "A+."

Continuity Test

(Two test prods and a 10 w. lamp in series with the 110 v. circuit.)

Contact	*Correct*	*Otherwise*
Gnd-A	light	Open wire or L1B
Gnd-V1G	"	Open L1A or wiring
Gnd-V2G	"	Open wire or L4
Gnd-V3G	"	Open wire or L7
Gnd-V4G	no light	Shorted C5 or R4
Gnd-bk.	light	Open wire, R1 or R2
Gnd-whi.	no light	Shorted C3
Whi-V1P	light	Open wire or L2
Whi-V2P	"	Open wire or L5
Whi-V3P	"	Open wire or L8
Whi-V5P	"	Open wire or T2 pri.
Blue-V4P	"	Open wire or T1 pri.
Blk-V4F	"	Open wire or R3

(With Headphone and Battery.)

Connect:
Gnd-V2G; rotate station selector; if click C7 shorted; adjust left acuminator; if click C8 shorted.
Gnd-V3G; duplicate above. Clicks show shorted C9 or C10.
Gnd-V4G; Clicks show shorted C11 or C12.
Green-V6G; no click shows open wire or T2 sec.
Brown-V5G; no click shows open wire or T1 sec.

This set is not critical to antenna lengths, and will give good results with a short indoor antenna. A total length of from 50 to 100 feet for the antenna and lead-in combined is recommended for average conditions. If locals cause interference, an aerial of 25 to 50 feet, including lead-in, may give better results. The recommended lengths may be exceeded, of course, in many instances with excellent results. Local conditions must govern the choice of antenna length. A good ground should be used.

There are four binding posts on the set, two for the reproducer, one for the aerial, one for the ground. Battery connections are made to the cable attached to the set, in accordance with the color code in the preceding column.

The use of '01As throughout is recommended by the manufacturer, with a '71 power tube; though a '12 may be used to economize batteries. A separate "C" battery is recommended for the first audio (brown lead) stage.

Lack of sensitivity, critical operation, motorboating, distorted reception, may often be checked to an open R4 leak. (Most of these effects may be experienced if the leak has too high a resistance; replace it with a leak of two to three megs. resistance.) The tube layout of this receiver is as follows: Looking at front of set, first R.F. tube socket is in left corner, front; second R.F., left, rear; third R. F. is next, followed by the detector; first A.F. socket is right rear and second A.F. or power stage is front right socket. Note that a wavelength of about 210 meters is recommended for neutralizing the receiver; but that one of abour 300 meters is recommended for balancing the aligning condenser. If condensers C1, C2 and C4 should short-circuit, there is no danger of shorting "B" batteries or burning out tube filaments (as would be the case with sets using neutralizing circuits which obtain the neutralizing potential by tapping to a point on the plate-circuit coil); for the neutralizing potential in this receiver is obtained from the plate circuit inductively by means of coils L3, L6 and L9. The effect of a low-resistance short in C1, C2 or C4 will be broad tuning, circuit oscillation and weak reception. If the leads to L3, L6 or L9 are reversed, it will be impossible to neutralize the receiver; this fault will occur only if the receiver was partly re-wired during servicing, and is readily localized by following through the neutralizing process. Start from the detector tube and work toward the antenna; the stage upon which a "zero point" or silence-point cannot be obtained is the faulty one. Noisy operation during manipulation of R1 indicates poor contact. (Instead of the variation of resistance being smooth, it is being effected in relatively large jumps.) The remedy is to clean the resistor and sliding contact with sandpaper. This must be done carefully, to prevent taking out the spring tension of the slider arm, when the arm will no longer make contact with the wire. A short in condenser C6 will cause the set to "go dead," as far as broadcast reception is concerned; in this case, a test from detector plate to filament will show a lower resistance than if the resistance of the primary of T1 were effective, instead of shorted out.

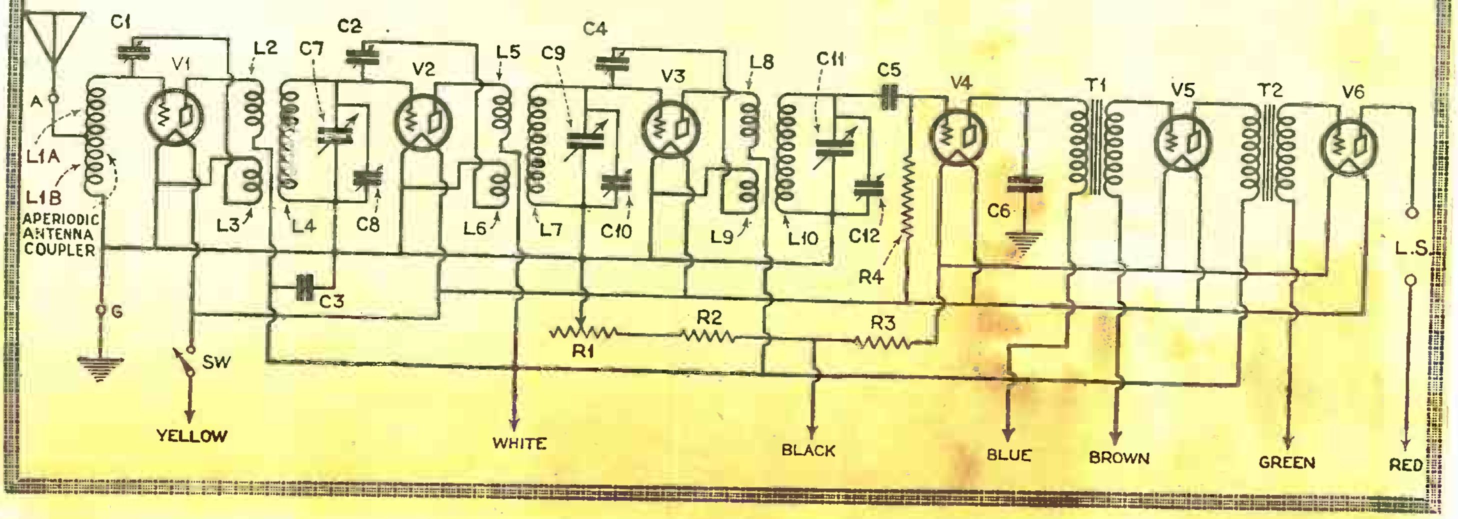

CROSLEY RADIO CORP.

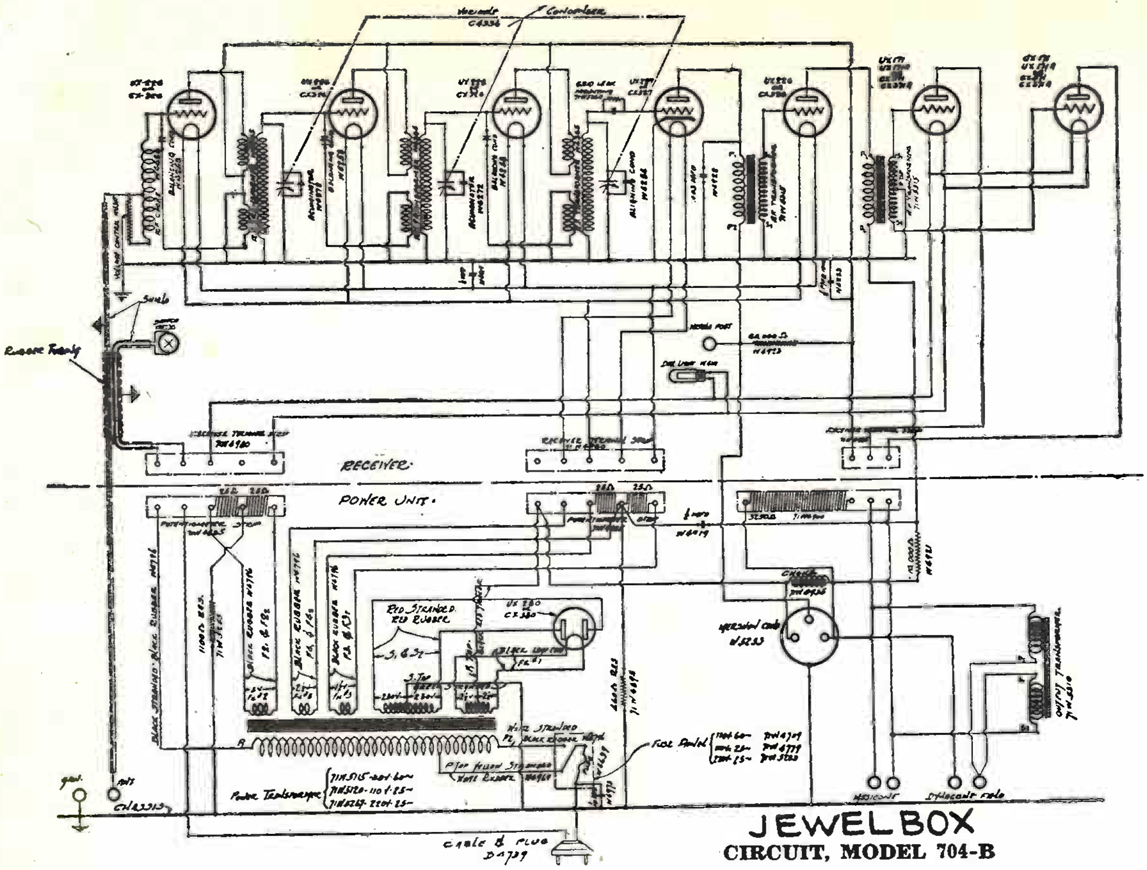

JEWEL BOX
CIRCUIT, MODEL 704-B

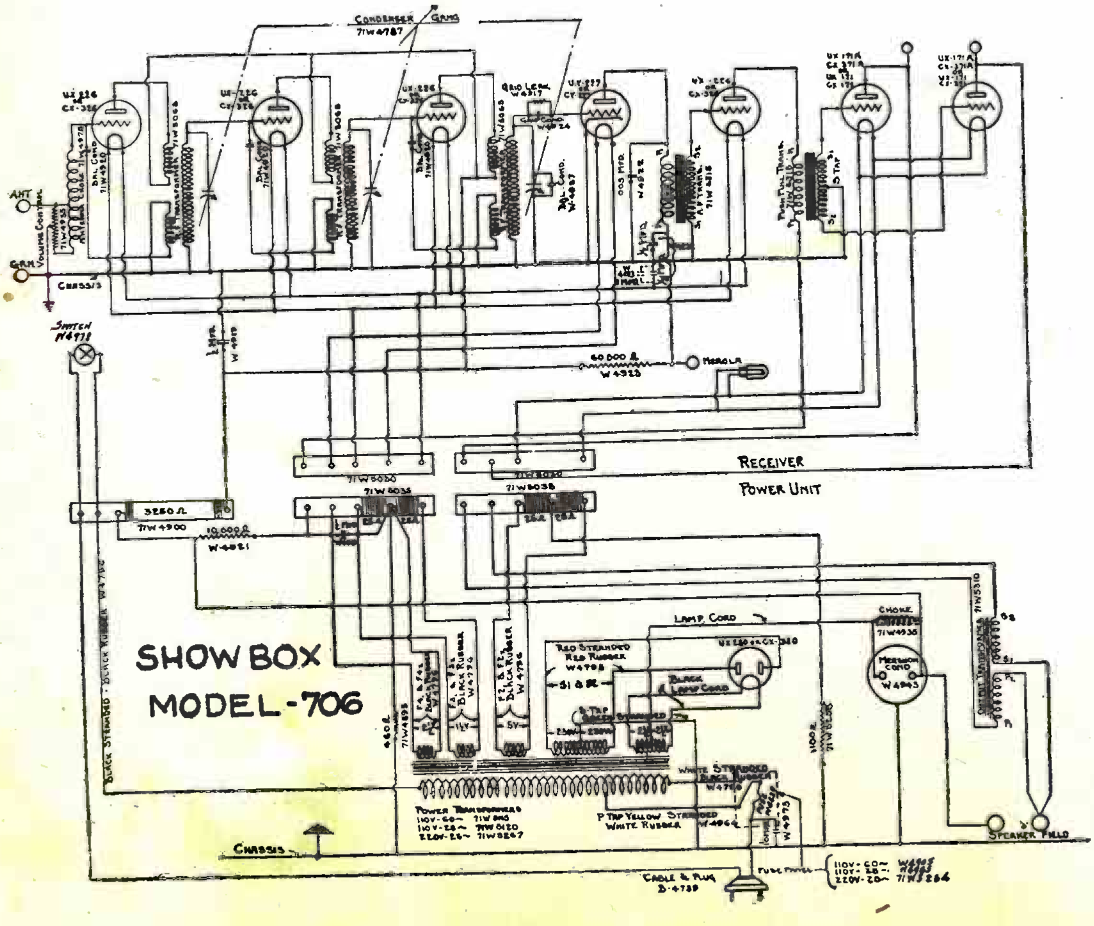

SHOW BOX
MODEL-706

CROSLEY RADIO CORP.

JEWELBOX - 804 A.C.

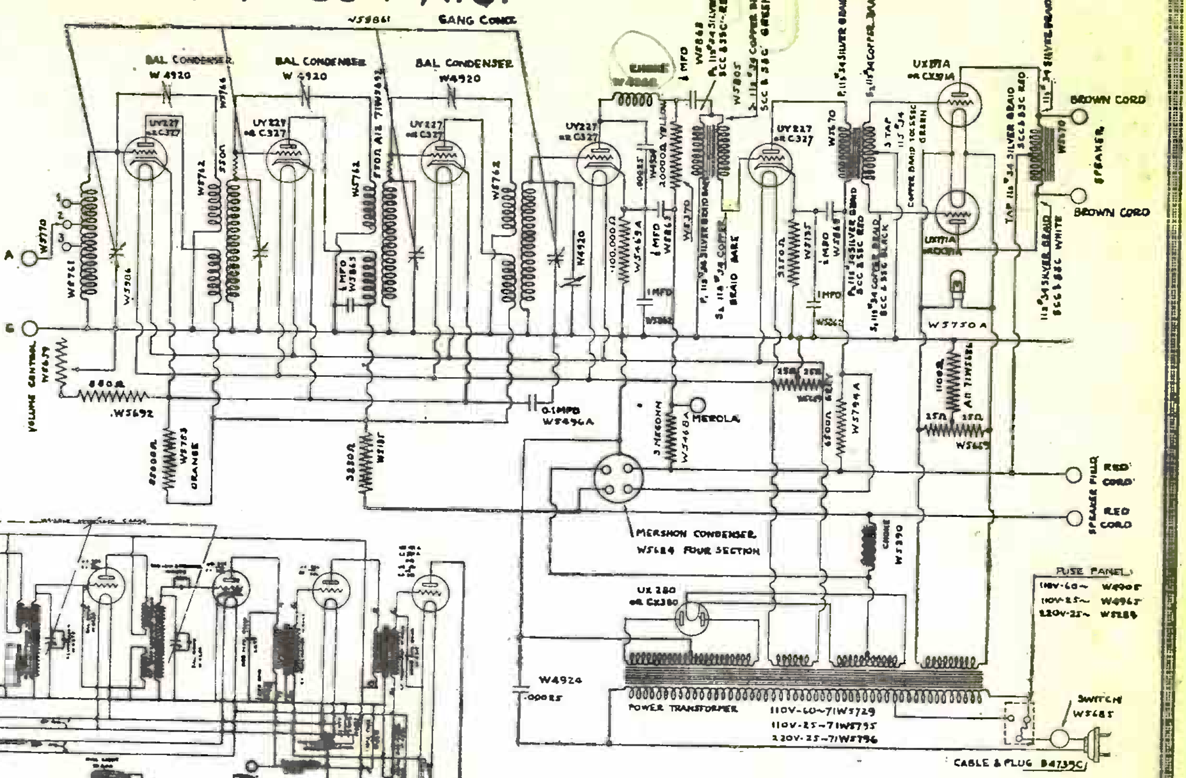

JEWELBOX - 704

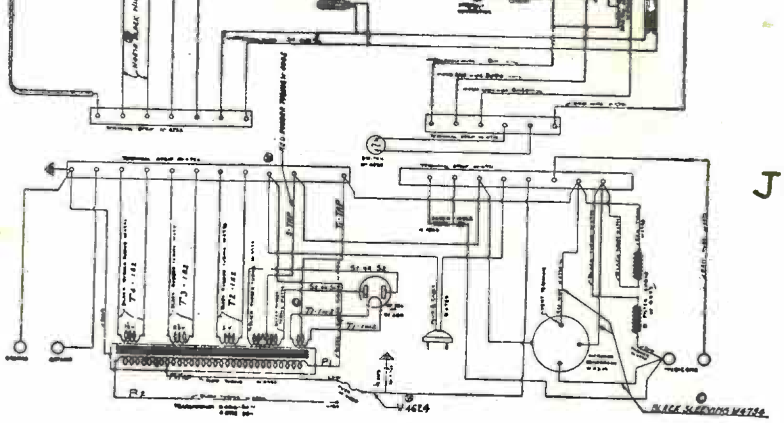

GEMBOX
GEMCHEST
610
609
A.C.

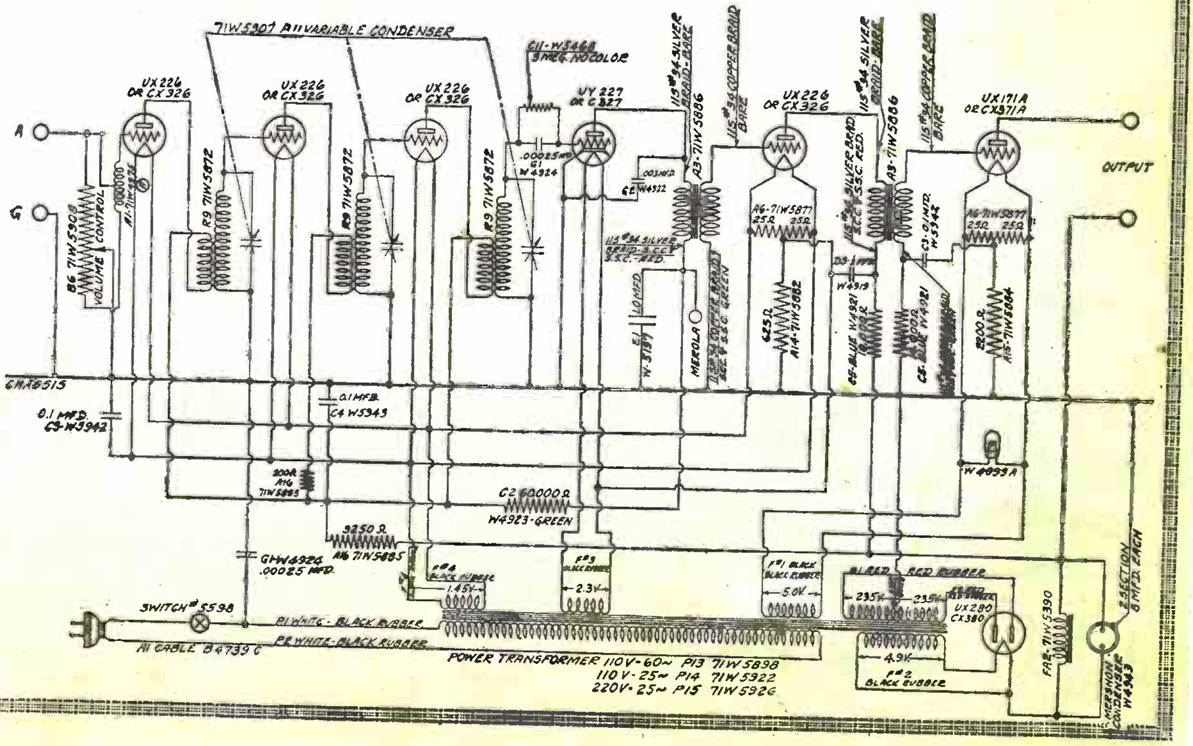

CROSLEY RADIO CORP.

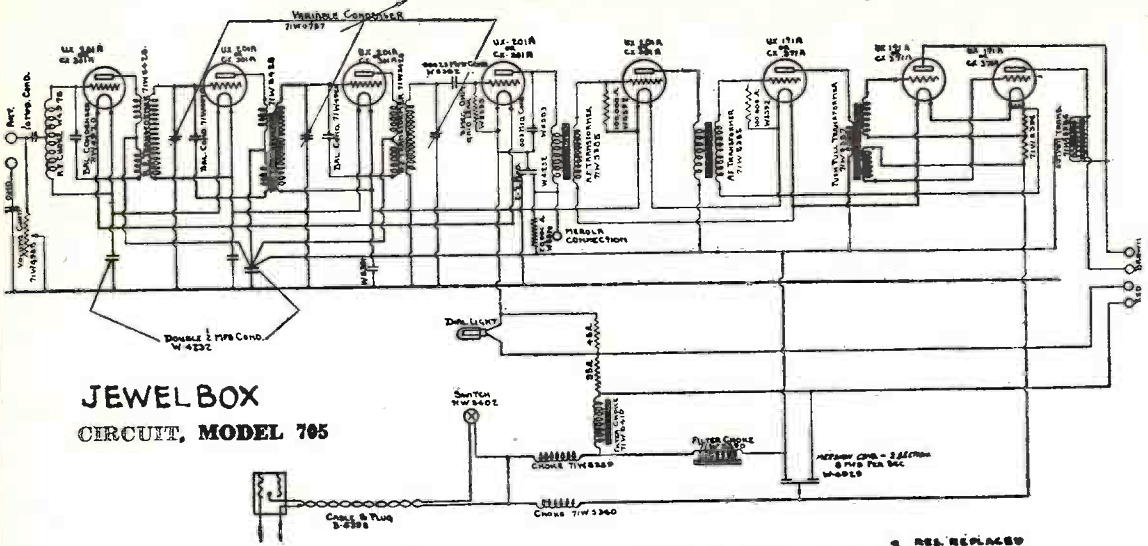

JEWELBOX CIRCUIT, MODEL 705

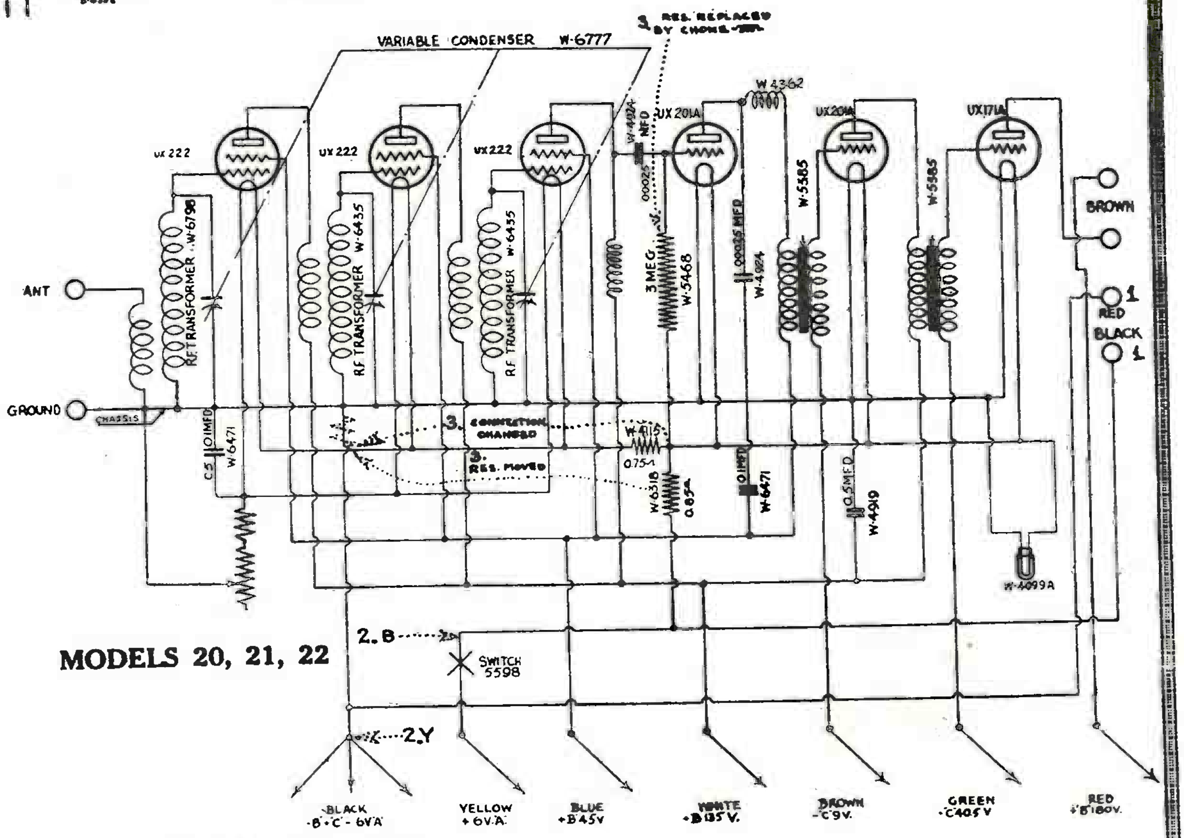

MODELS 20, 21, 22

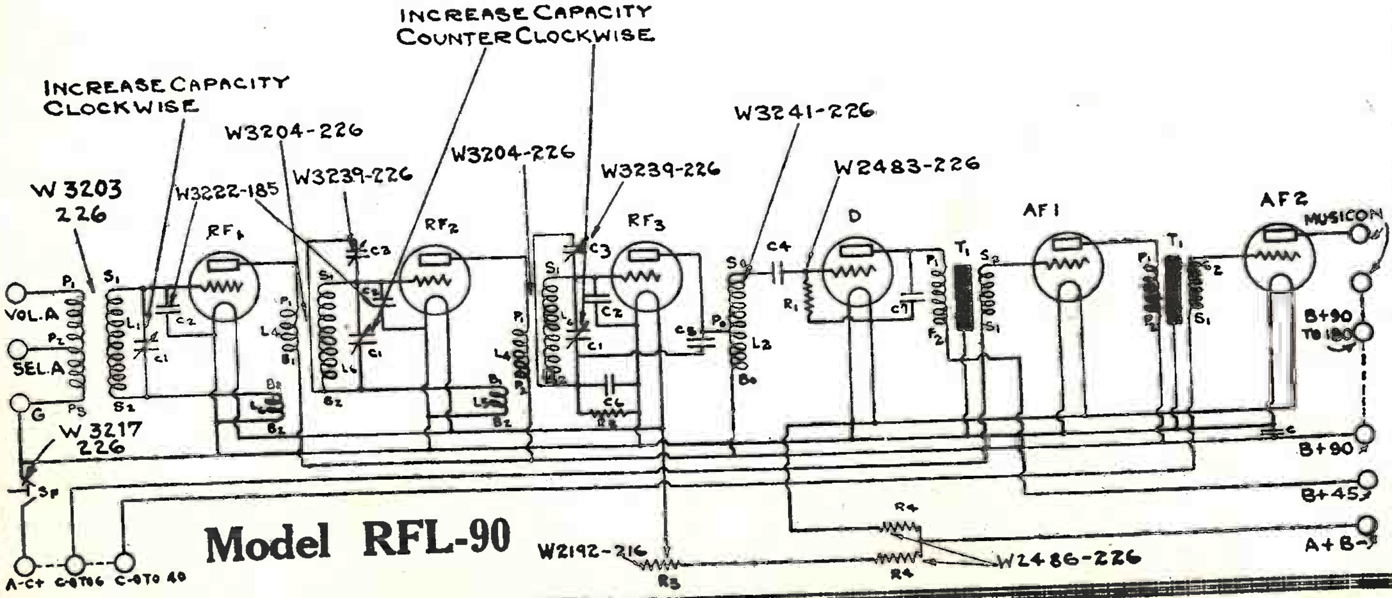

Model RFL-90

CROSLEY RADIO CORP.

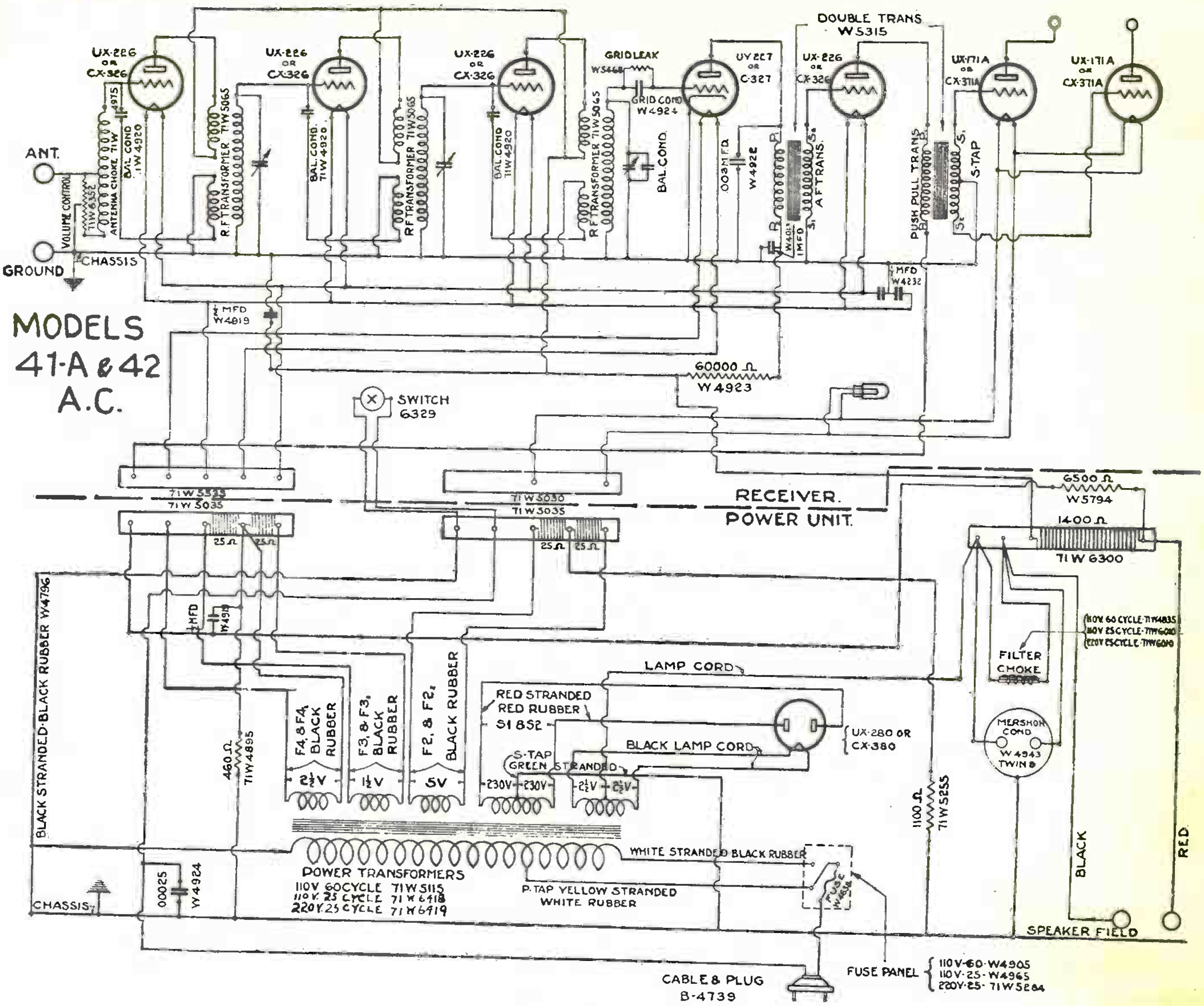

MODELS
41-A & 42
A.C.

MODELS 6-60 AND 6-85 CIRCUIT

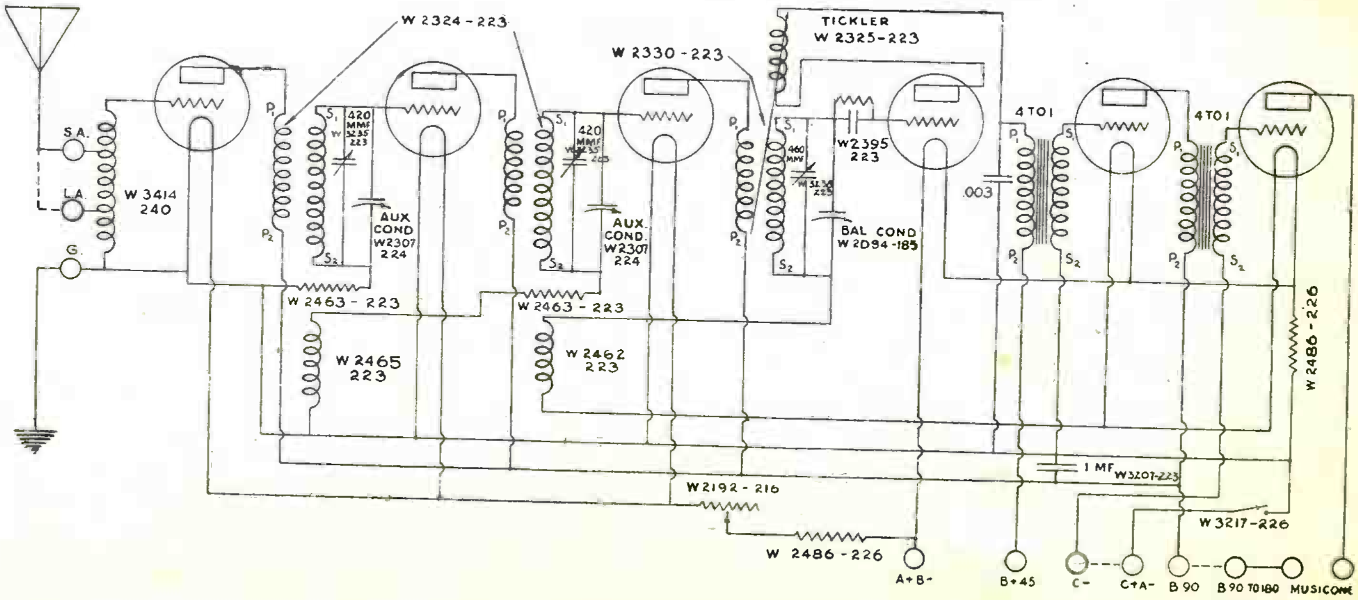

CROSLEY RADIO CORP.

CIRCUIT, MODEL 401-A

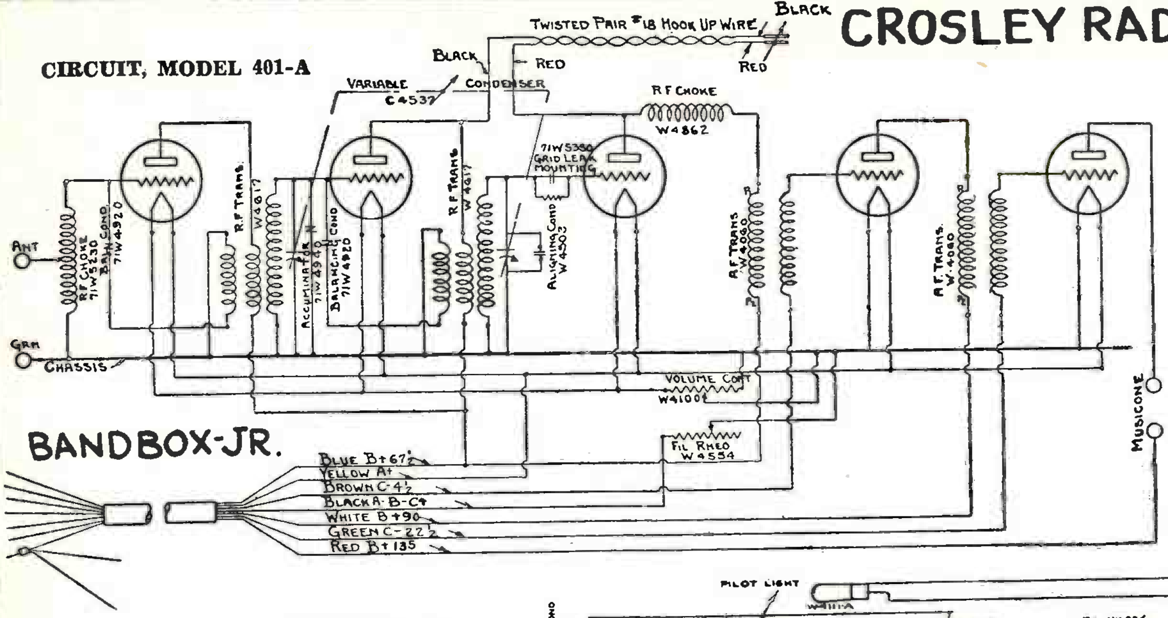

BANDBOX-JR.

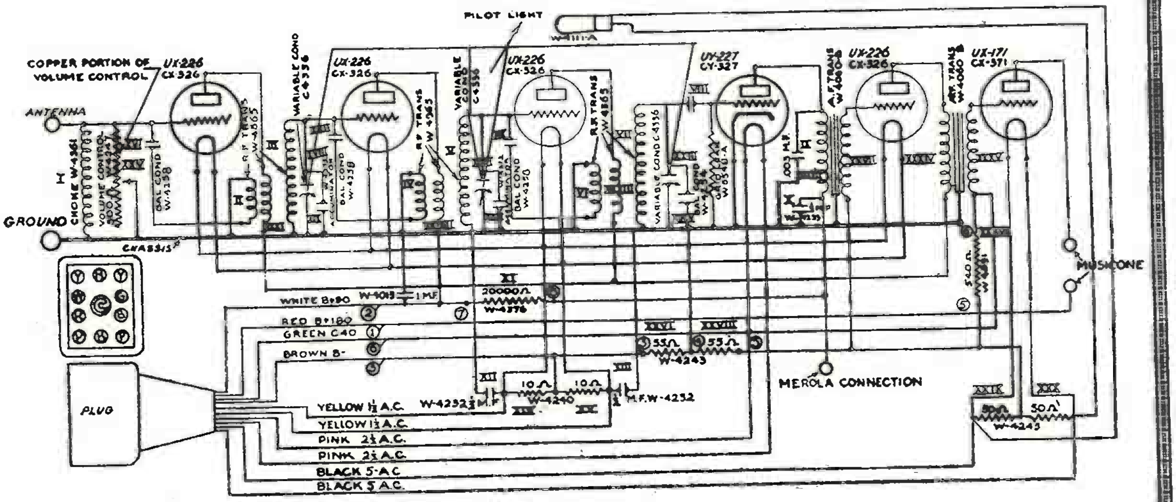

MODEL 602 BANDBOX RECEIVER

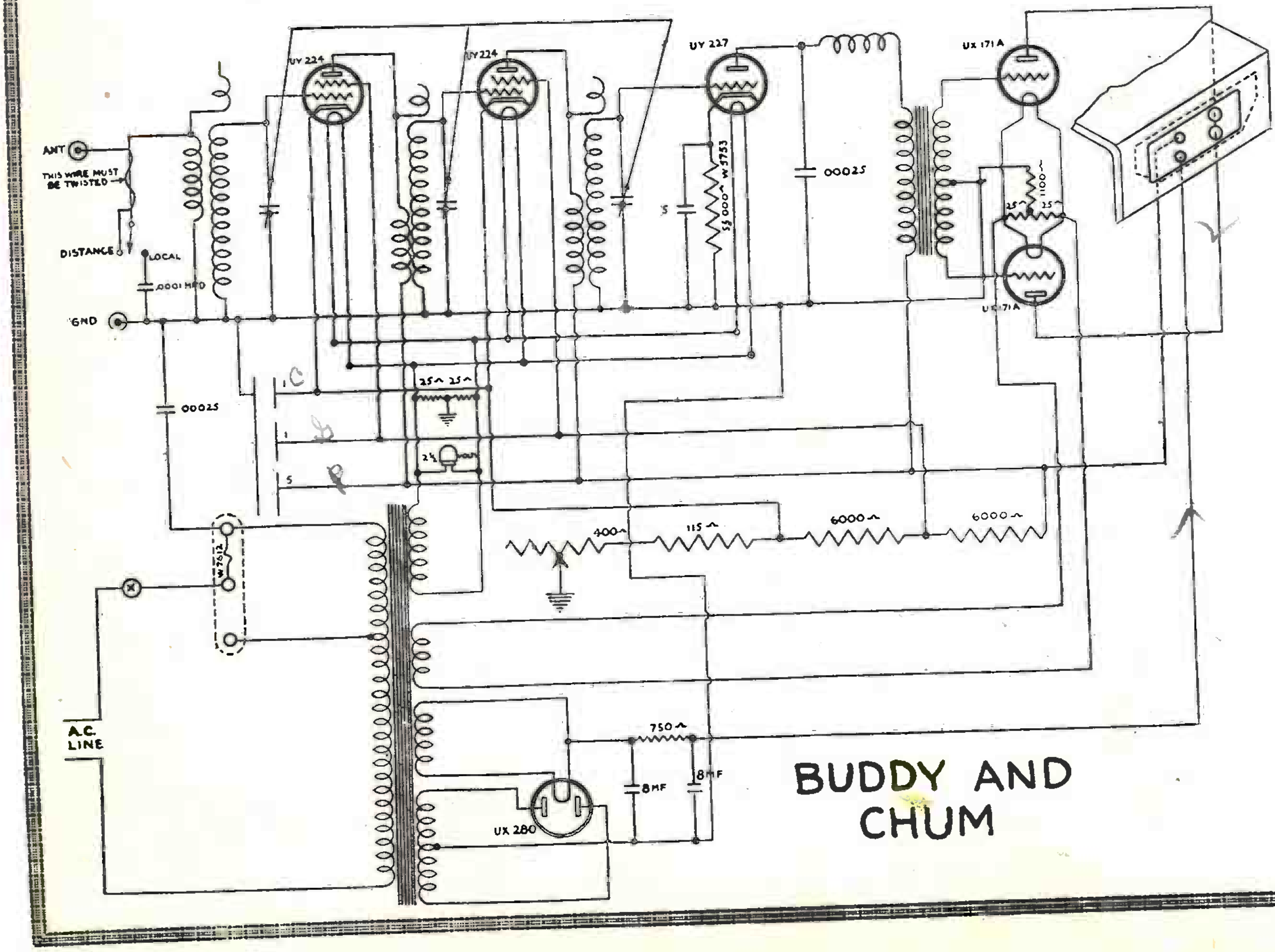

BUDDY AND CHUM

Radio Service Data Sheets

EDISON R-4, R-5 AND C-4

In the Edison Receiver, Models R-4, R-5 and C-4, the R.F. amplifying circuit employed is a form of "constant gain" circuit, wherein two primaries are used in each radio frequency transformer, one resonated below and one above the broadcast frequency spectrum. The four R.F. transformers employed are identical with each other and their secondaries are tuned by identical tuning condenser sections. Referring to the Schematic wiring diagram L1, L2, L3 and L4 are low frequency primaries, resonated to approximately 450 kilocycles by means of the condensers C5, C6, C7 and C8; L5, L6, L7 and L8 are high frequency primaries, not shunted by any condenser; L9, L10, L11 and L12 are secondaries tuned by the variable condenser sections C1, C2, C3 and C4, which are shunted by the trimming capacities C1A, C2A, C3A and C4A. Stabilization of the R.F. amplifier is accomplished by the use of grid circuit neutralization: *i.e.*, the employment of neutralizing condensers, C10, C11 and C12, connected from the plate of each R.F. amplifying tube to a coil tightly coupled to the secondary of the input transformer of that tube. These coils in the diagram are L5, L6 and L7, which are at the same time the high frequency primaries of the first, second and third R.F. transformers. Substantial resonance of the first R.F. input circuit to the resonant frequency of the second and third R.F. and detector input circuits is maintained by holding the effective antenna-ground capacity to a value less than 100 micromicrofarads. Antennas of less than this capacity are to be connected to the binding post marked "Antenna," while antennas of greater than this capacity are to be connected to the "Long Antenna" binding post. This latter connection places the condenser C9 in series with the antenna-ground capacity, reducing the effective value of the latter to less than 100 micromicrofarads for antennas of capacities up to 500 micromicrofarads. Self-bias of the first R.F. amplifying tube is secured by the use of resistor R1, by-passed by the capacity C20. Isolation of the R.F. component of the plate current of this tube is accomplished by the use of resistor R2 and capacity C19. Self-bias of the second and third R.F. amplifying tubes in common is effected by the resistor R3 and the section A of the volume control by-passed by the capacity C23. Isolation of the R.F. components of the plate currents of those two tubes in common results from the use of the resistor R5 and the capacity C22. The volume control operates to reduce volume in the following manner: As the contact shown in the diagram is moved leftward from the extreme right-hand end position, the resistance B, lying across the primary system of the first R.F. transformer, is reduced in value following a special resistance taper. After approximately mid-position has been reached, this resistance B has become and is maintained at substantially zero value. A remains at zero value until approximately mid-position of the control has been reached and thereafter increases in value uniformly with angular rotation of the control knob. Resistance A forming part of the bias resistance for the second and third R.F. amplifying tubes, a leftward motion of the contact of the volume control after approximately mid-position has been passed increases the bias on these tubes. The resistor R4 limits the necessary amount of resistance in the section A of the volume control by increasing the current at minimum volume setting of the control from a fraction of a milliampere to between 3 and 4 milliamperes. When minimum volume setting of the control has been reached, a further slight turn of the control throws the radio-phonograph switch, S1, from its lower to its upper diagram position: *i.e.*, from radio to phonograph position, this being the sole means provided for the throw of this switch. The detector "B" is obtained from the plate supply for the R.F. and first A.F. amplifying tubes through a two-stage resistance-and-condenser filter, consisting of R9, C25, R8 and C24. This filter serves a triple purpose: it effects the necessary reduction of plate voltage, the isolation of the A.F. current in the detector plate circuit and a reduction of ripple in the detector plate supply. A positive bias is placed on the heater of the detector tube with respect to its cathode by the connection of the variable contact of the hum adjuster R6 to the cathode of the first R.F. amplifying tube. A high frequency cut-off is provided by the capacity C15 shunting the secondary, L15, of the A.F. amplifying transformer, the primary of which is shown as L14. Hum due to residual 120-cycle ripple in the plate supply for the first A.F. amplifying tube is eliminated by the use of the series circuit C21, R10, connected between the positive of the plate supply and the cathode of this tube. The impedance of this circuit is arranged to be 9 (the mu of the tube) times the impedance of the parallel circuit C26, R11, and the phase angles of the two circuits to be the same. This results in the impression on the grid of this tube of a voltage proper in both phase and amplitude to counteract the effect of the residual ripple of the plate supply. The second A.F. transformer has a primary L16, and two separate half-secondaries, L17 and L18. These half-secondaries are separate in order to permit the insertion between their low potential ends of the resistor R13. Between the center-tap of the filament winding for the second stage amplifying tubes and the fixed center tap of R13 is connected the self-bias resistor for these tubes. A variable contact operating on R13 is connected to the negative of the plate supply. The function of R13 is to permit the increase of the bias on either of the two second A.F. tubes at will by the amount necessary with any two given tubes to balance out residual hum. L32, part of the power transformer primary, is designed for use from 100 to 110 volts; L32 and L33 together from 110 to 120 volts; and L32 and L34 together from 130 to 140 volts. R15 is a bleeder or "loss-current" resistor, the function of which is to build up to the required value the excitation current flowing through L22 and to stabilize the plate voltage on the R.F. and first A.F. tubes for varying values of plate current in the second and third R.F. amplifying tubes.

IDENTIFICATION OF PARTS

C1, C2, 2-gang, .000355 mf. each; C3, C4, ditto; C5, C6, C7, C8, .00025 mf. each; C9, .000125 mf.; C10, C11, C12, 40 to 80mmf., variable; C13, .0001 mf.; C14, .001 mf.; C15, .00045 mf.; C19, 0.1 mf., 300 V.; C20, ditto; C21, 0.16 mf., 300 V., (C19, C20 and C21 in same can); C22, 0.1 mf., 300 v.; C23, 1.0 mf., 150 v., (C22 and C23 in same can); C24, 1.0 mf., 300 v.; C25, 0.5 mf., 300 v.; C26, 1.0 mf., 150 v., (C24, C25 and C26 in same can); C27, 2 mf., 600 v.; C28, ditto; C29, 1.0 mf., 300 v.; C1A, C2A, C3A and C4A trimmers on side of variable condenser section which each shunts.

R1, 1000 ohms, 1 watt; R2, ditto; R3, 400 ohms, 1 w.; R4, 40,000 ohms, 1 w.; R5, 400 ohms, 1 w.; R6, 20 ohms; R7, 1.5 meg., 1 w.; R8, 25,000 ohms, 1 w.; R9, 25,000 ohms, 1 w.; R10, 6000 ohms, 1 w.; R11, 2,000 ohms, 1 w.; R12, 20 ohms; R13, 200 ohms; R14, 780 ohms, 5 w.; R15, 10,000 ohms, 5 w.

L1, L2, L3 and L4, 500 mhys., each; L5, L6, L7 and L8, 7½ turns, each; L9, L10, L11 and L12, 245 mhys., each (measured in shield); L13, 50 to 65 millihys.; L14 and L15, 4-to-1 A.F.T.; L16, L17 and L18, 5-to-1 ratio A.F.T. with separate secondaries connected in series by variable resistance R13; L19, L20, speaker input transformer (mounted in speaker frame) having center-tapped primary; L21, secondary, speaker input transformer; L22, dynamic reproducer field coil, 4,500 ohms; L23, voice coil for above; L24, inside third of filter choke, 20 hys., 375 ohms; L25, outside two-thirds of choke.

S1, radio-phonograph switch, S.P.D.T. toggle, opened by volume control shaft; S2, Line switch, S.P.S.T. toggle; Light-O-Matic switch, located in dial mechanism, operating Light-O-Matic pilot light.

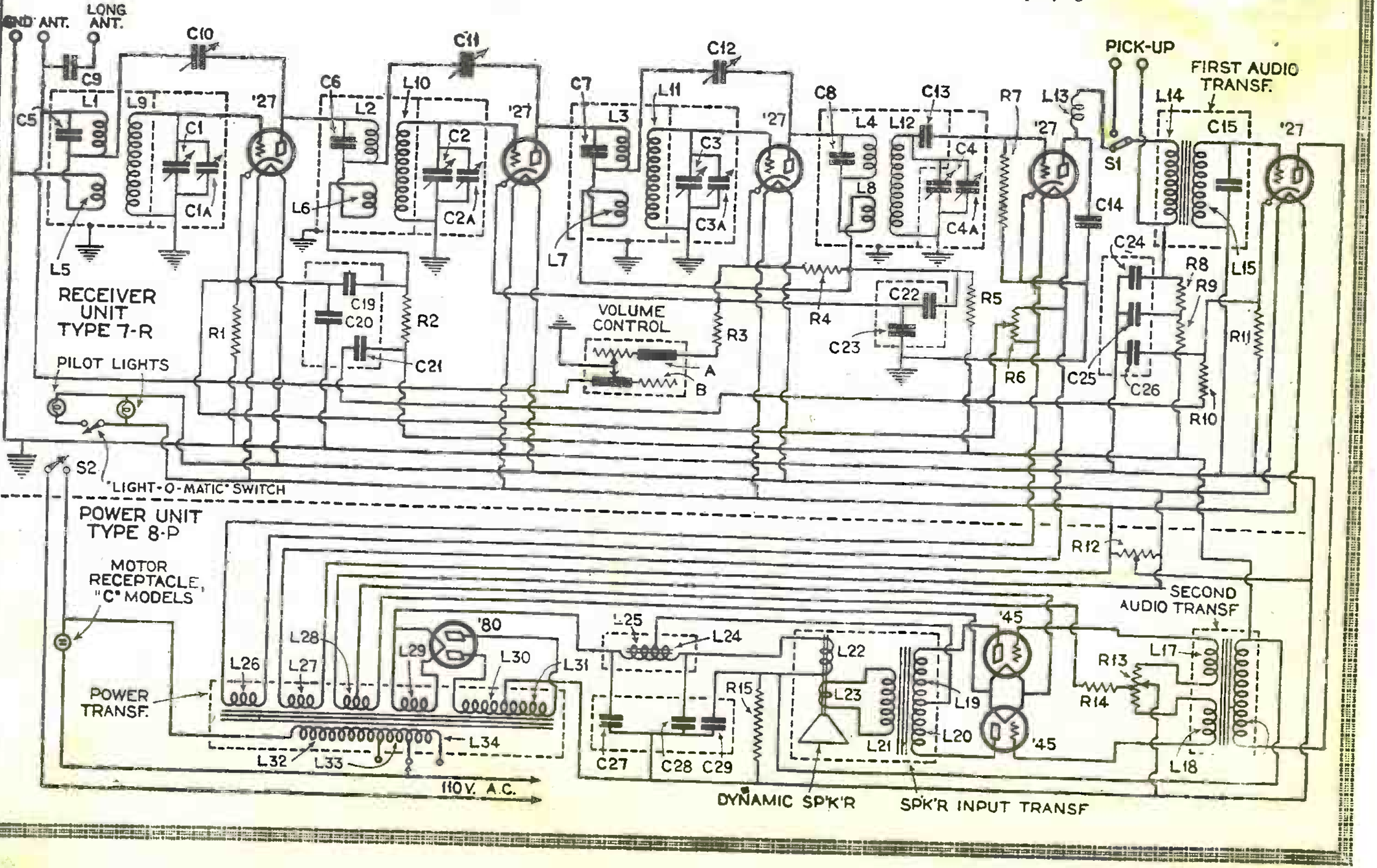

THOMAS A.EDISON, Inc.

MODELS-R-1 R-2 & C-2 CHASSIS JR & JC.

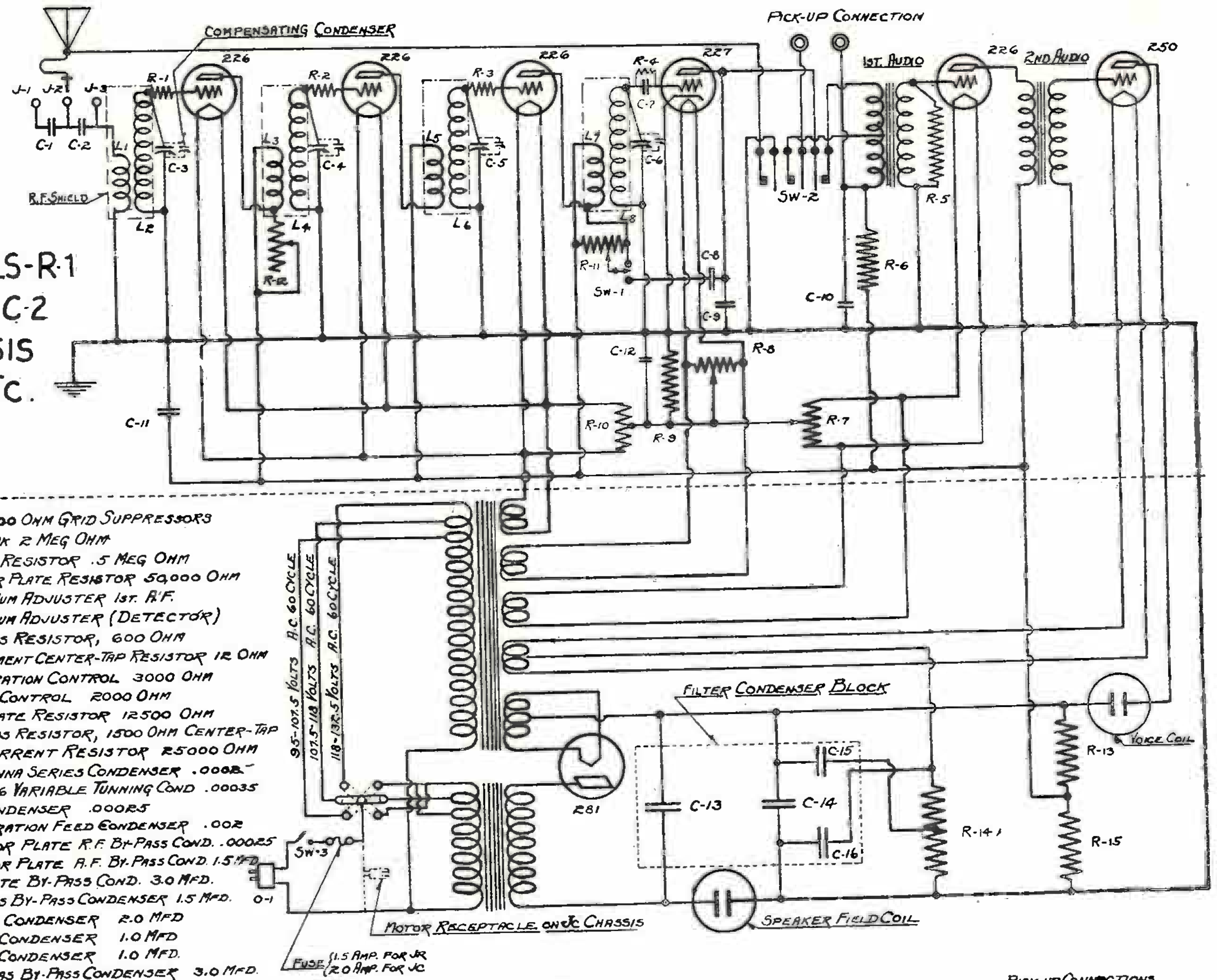

R-1 R-2 R-3 600 OHM GRID SUPPRESSORS
R-4 GRID LEAK 2 MEG OHM
R-5 LOADING RESISTOR .5 MEG OHM
R-6 DETECTOR PLATE RESISTOR 50,000 OHM
R-7 20 OHM HUM ADJUSTER 1st. R.F.
R-8 20 OHM HUM ADJUSTER (DETECTOR)
R-9 226 BIAS RESISTOR, 600 OHM
R-10 R.F. FILAMENT CENTER-TAP RESISTOR 12 OHM
R-11 REGENERATION CONTROL 3000 OHM
R-12 VOLUME CONTROL 2000 OHM
R-13 226 PLATE RESISTOR 12500 OHM
R-14 250 BIAS RESISTOR, 1500 OHM CENTER-TAP
R-15 LOSS CURRENT RESISTOR 25000 OHM
C-1 C-2 ANTENNA SERIES CONDENSER .0002
C-3 C-4 C-5 C-6 VARIABLE TUNNING COND .00035
C-7 GRID CONDENSER .00025
C-8 REGENERATION FEED CONDENSER .002
C-9 DETECTOR PLATE R.F. BY-PASS COND. .00025
C-10 DETECTOR PLATE A.F. BY-PASS COND. 1.5 MFD
C-11 226 PLATE BY-PASS COND. 3.0 MFD.
C-12 226 BIAS BY-PASS CONDENSER 1.5 MFD.
C-13 FILTER CONDENSER 2.0 MFD
C-14 FILTER CONDENSER 1.0 MFD
C-15 FILTER CONDENSER 1.0 MFD.
C-16 250 BIAS BY-PASS CONDENSER 3.0 MFD.
J-1 J-2 J-3 ATENNA JACKS
SW-1 REGENERATION-SWITCH
SW-2 PHONO-RADIO SWITCH
SW-3 ON-OFF SWITCH
O-1 LINE RECEPTACLE (MALE)

MODEL C-1 CHASSIS-SC.

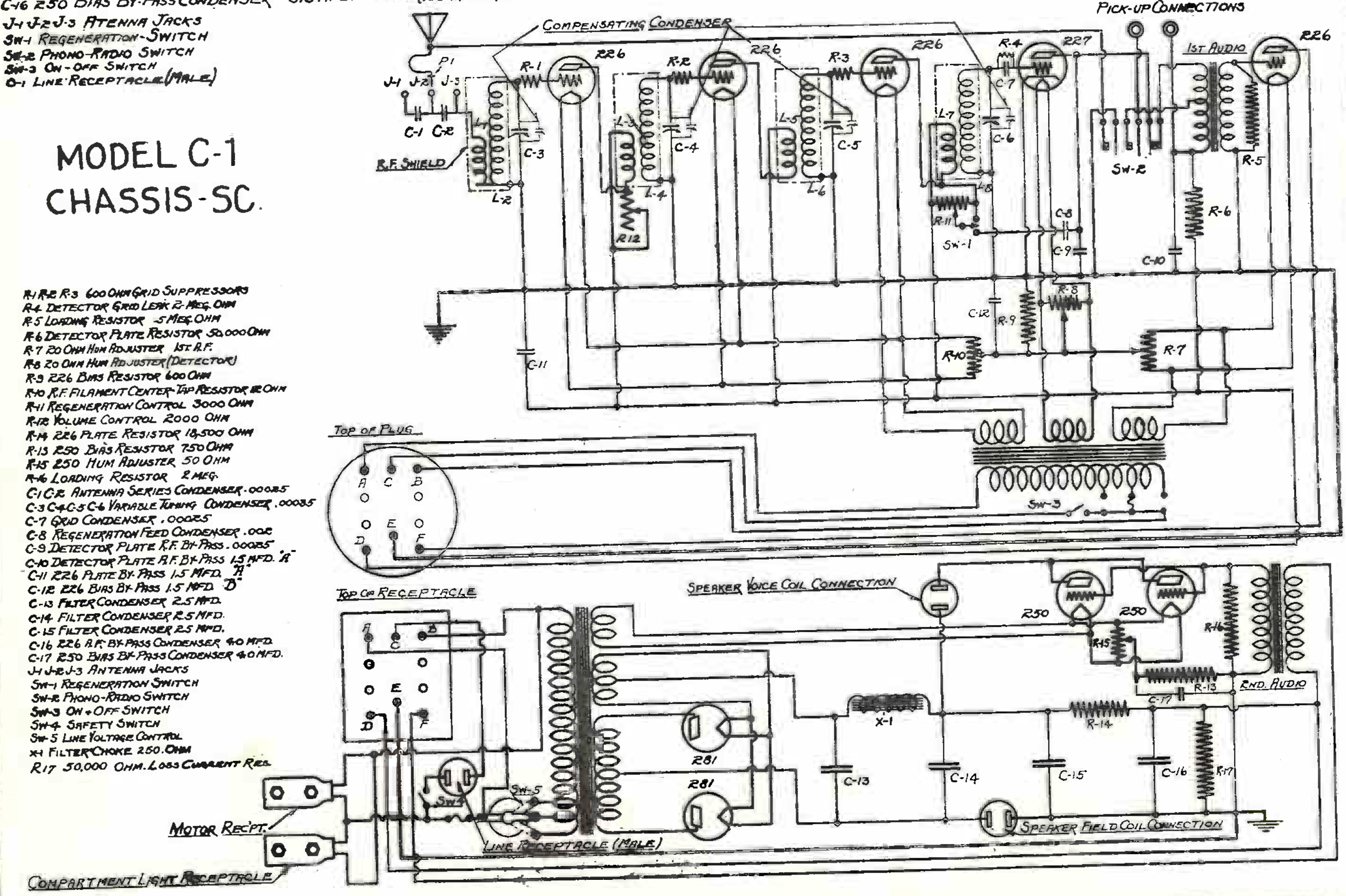

R-1 R-2 R-3 600 OHM GRID SUPPRESSORS
R-4 DETECTOR GRID LEAK 2-MEG. OHM
R-5 LOADING RESISTOR .5 MEG. OHM
R-6 DETECTOR PLATE RESISTOR 50,000 OHM
R-7 20 OHM HUM ADJUSTER 1st. R.F.
R-8 20 OHM HUM ADJUSTER (DETECTOR)
R-9 226 BIAS RESISTOR 600 OHM
R-10 R.F. FILAMENT CENTER-TAP RESISTOR 12 OHM
R-11 REGENERATION CONTROL 3000 OHM
R-12 VOLUME CONTROL 2000 OHM
R-14 226 PLATE RESISTOR 18,500 OHM
R-13 250 BIAS RESISTOR 750 OHM
R-15 250 HUM ADJUSTER 50 OHM
R-16 LOADING RESISTOR 2 MEG.
C-1 C-2 ANTENNA SERIES CONDENSER .00025
C-3 C-4 C-5 C-6 VARIABLE TUNING CONDENSER .00035
C-7 GRID CONDENSER .00025
C-8 REGENERATION FEED CONDENSER .002
C-9 DETECTOR PLATE R.F. BY-PASS .00025
C-10 DETECTOR PLATE A.F. BY-PASS 1.5 MFD. "A"
C-11 226 PLATE BY-PASS 1.5 MFD. "A"
C-12 226 BIAS BY-PASS 1.5 MFD. "D"
C-13 FILTER CONDENSER 2.5 MFD.
C-14 FILTER CONDENSER 2.5 MFD.
C-15 FILTER CONDENSER 2.5 MFD.
C-16 226 A.F. BY-PASS CONDENSER 4.0 MFD.
C-17 250 BIAS BY-PASS CONDENSER 4.0 MFD.
J-1 J-2 J-3 ANTENNA JACKS
SW-1 REGENERATION SWITCH
SW-2 PHONO-RADIO SWITCH
SW-3 ON + OFF SWITCH
SW-4 SAFETY SWITCH
SW-5 LINE VOLTAGE CONTROL
X-1 FILTER CHOKE 250. OHM
R17 50,000 OHM. LOSS CURRENT RES.

THOMAS A. EDISON, INC.

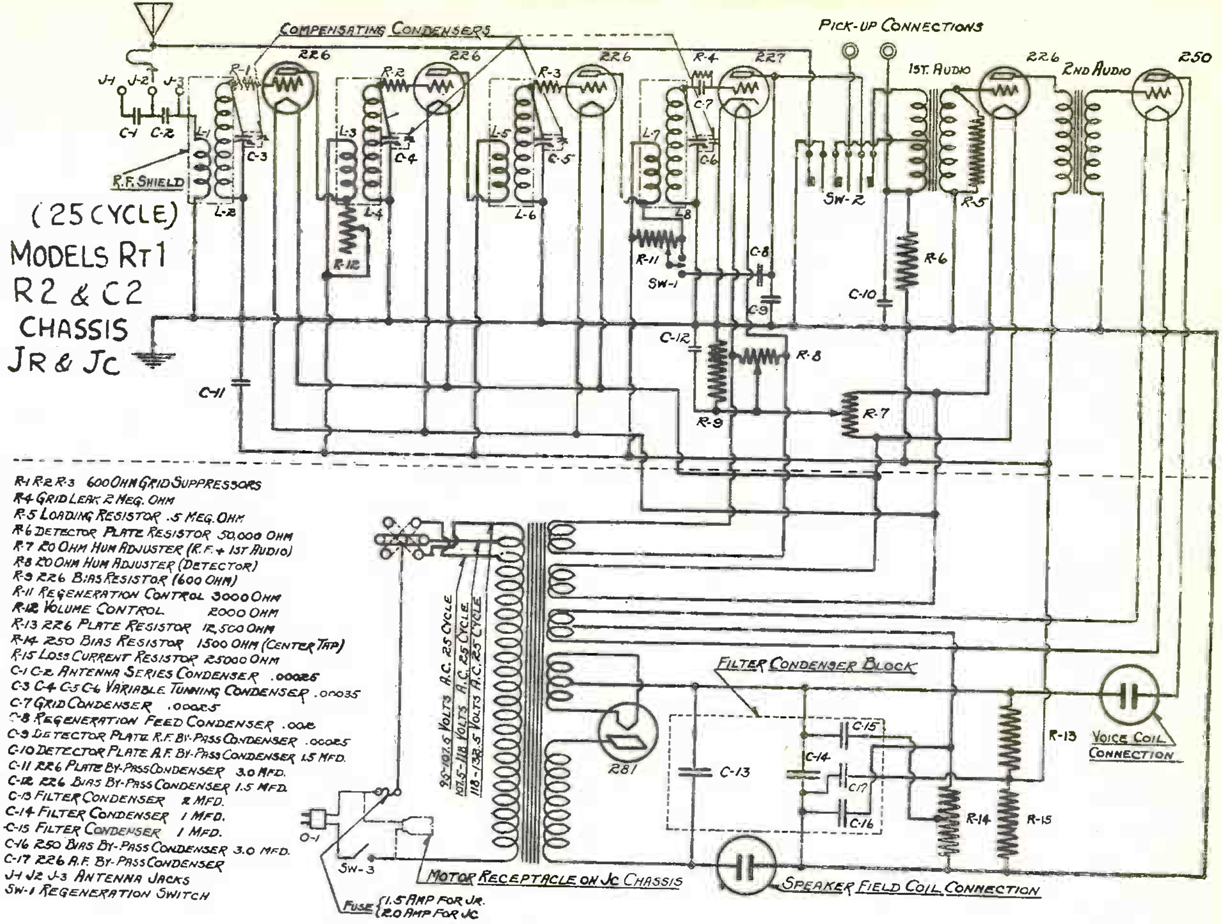

(25 CYCLE)
MODELS RT1
R2 & C2
CHASSIS
JR & JC

R-1 R-2 R-3 600 OHM GRID SUPPRESSORS
R-4 GRID LEAK 2 MEG. OHM
R-5 LOADING RESISTOR .5 MEG. OHM
R-6 DETECTOR PLATE RESISTOR 50,000 OHM
R-7 20 OHM HUM ADJUSTER (R.F. + 1ST AUDIO)
R-8 20 OHM HUM ADJUSTER (DETECTOR)
R-9 226 BIAS RESISTOR (600 OHM)
R-11 REGENERATION CONTROL 3000 OHM
R-12 VOLUME CONTROL 2000 OHM
R-13 226 PLATE RESISTOR 12,500 OHM
R-14 250 BIAS RESISTOR 1500 OHM (CENTER TAP)
R-15 LOSS CURRENT RESISTOR 25000 OHM
C-1 C-2 ANTENNA SERIES CONDENSER .00025
C-3 C-4 C-5 C-6 VARIABLE TUNING CONDENSER .00035
C-7 GRID CONDENSER .00025
C-8 REGENERATION FEED CONDENSER .002
C-9 DETECTOR PLATE R.F. BY-PASS CONDENSER .00025
C-10 DETECTOR PLATE A.F. BY-PASS CONDENSER 1.5 MFD.
C-11 226 PLATE BY-PASS CONDENSER 3.0 MFD.
C-12 226 BIAS BY-PASS CONDENSER 1.5 MFD.
C-13 FILTER CONDENSER 2 MFD.
C-14 FILTER CONDENSER 1 MFD.
C-15 FILTER CONDENSER 1 MFD.
C-16 250 BIAS BY-PASS CONDENSER 3.0 MFD.
C-17 226 A.F. BY-PASS CONDENSER
J-1 J-2 J-3 ANTENNA JACKS
SW-1 REGENERATION SWITCH

DIAGRAMMATIC VIEW OF POWER UNIT, DYNAMIC SPEAKER CONNECTED·

MODELS R1, R2 AND C2 CHASSIS JR AND JC 25 CYCLE

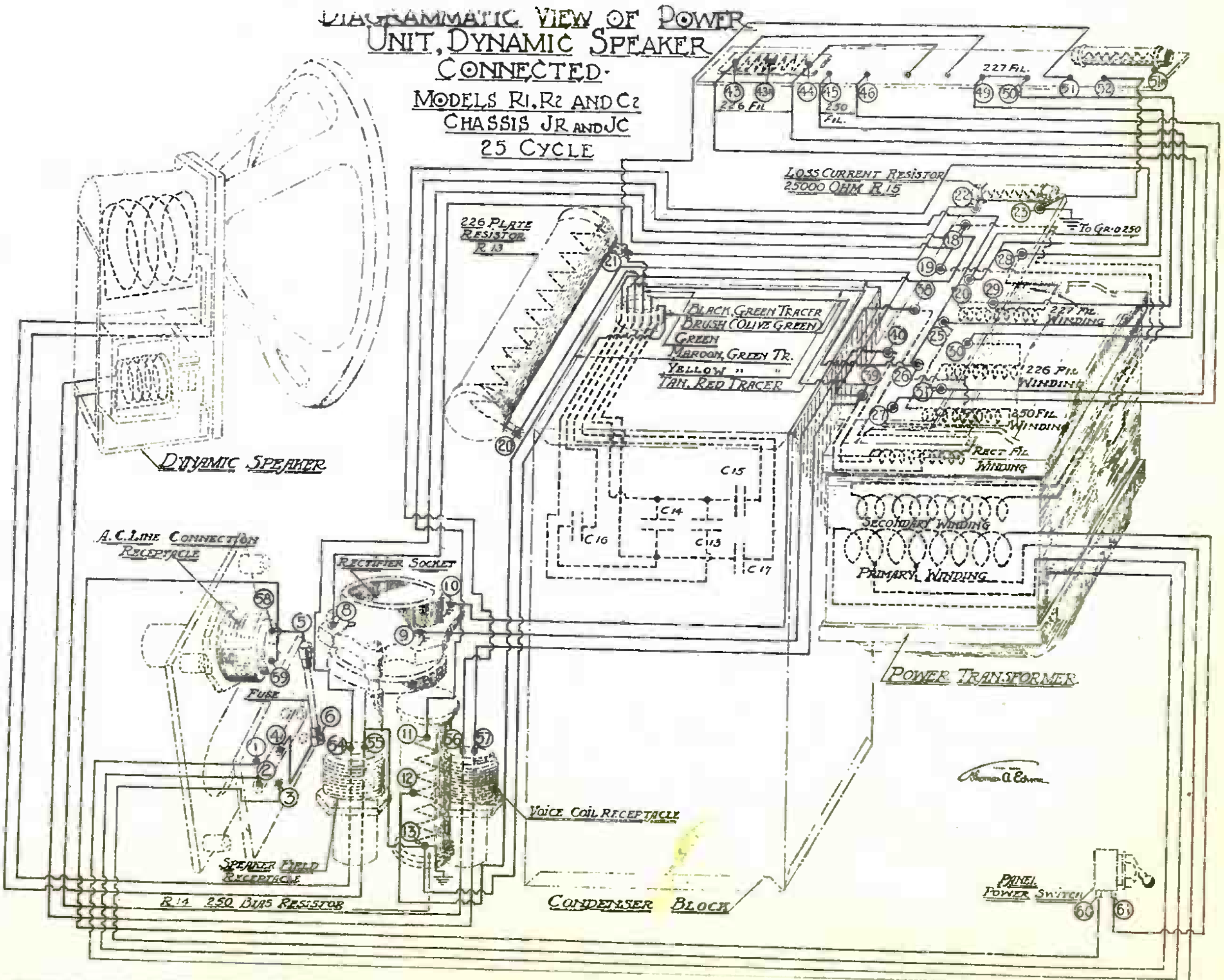

F.A.D. ANDREA INC.

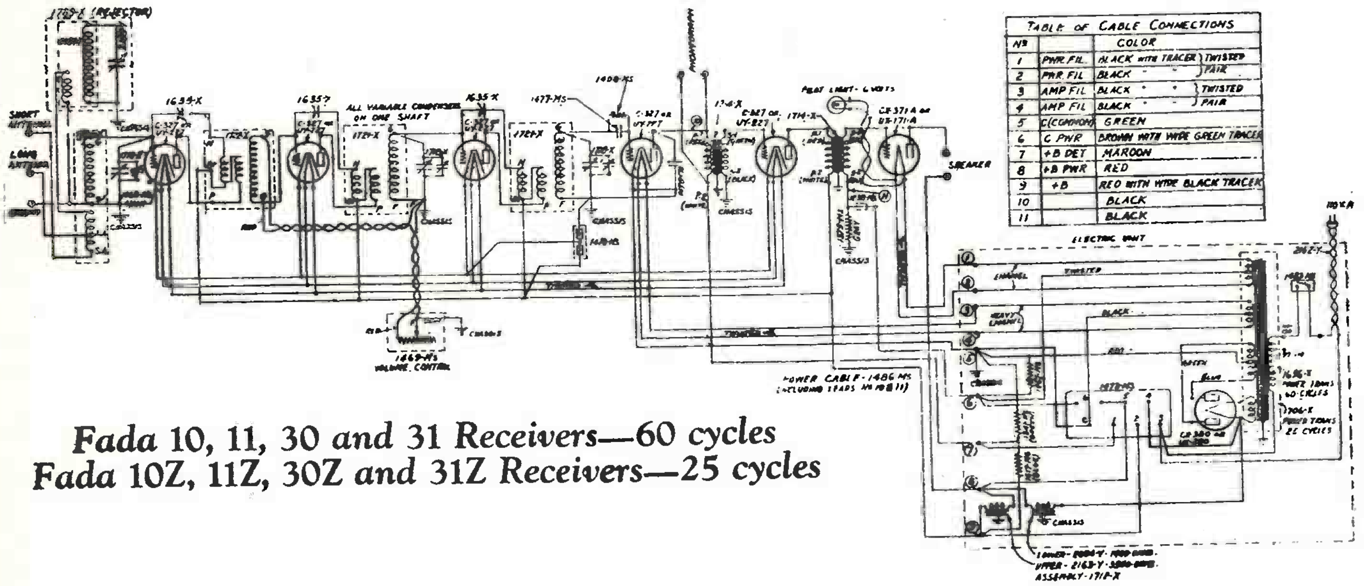

Nº		COLOR
1	PWR FIL	BLACK with TRACER } TWISTED PAIR
2	PWR FIL	BLACK " "
3	AMP FIL	BLACK " " } TWISTED PAIR
4	AMP FIL	BLACK " "
5	C(COMMON)	GREEN
6	C PWR	BROWN WITH WIDE GREEN TRACER
7	+B DET	MAROON
8	+B PWR	RED
9	+B	RED WITH WIDE BLACK TRACER
10		BLACK
11		BLACK

Fada 10, 11, 30 and 31 Receivers—60 cycles
Fada 10Z, 11Z, 30Z and 31Z Receivers—25 cycles

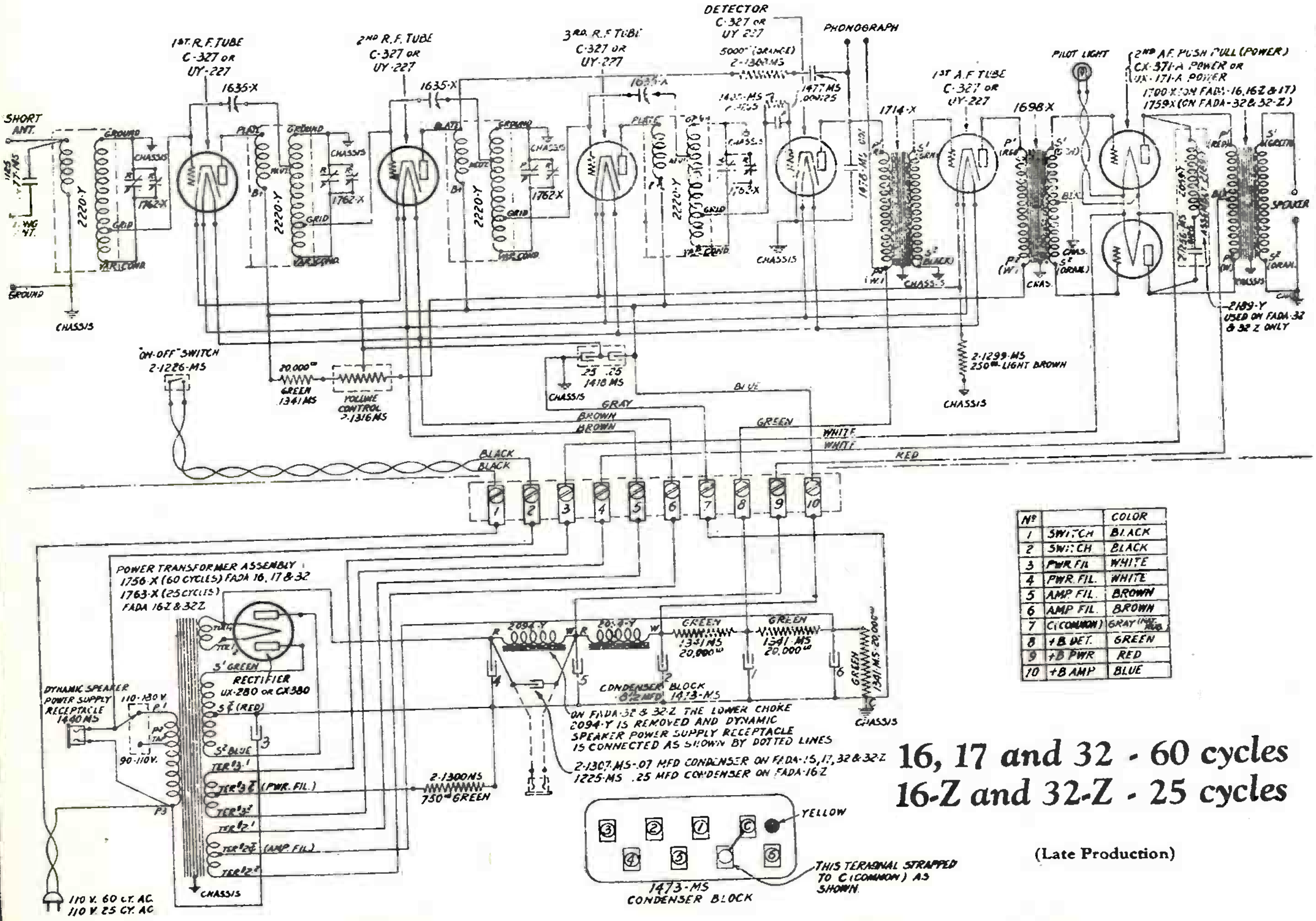

Nº		COLOR
1	SWITCH	BLACK
2	SWITCH	BLACK
3	PWR FIL	WHITE
4	PWR. FIL.	WHITE
5	AMP. FIL.	BROWN
6	AMP. FIL.	BROWN
7	C (COMMON)	GRAY [illegible]
8	+B DET.	GREEN
9	+B PWR	RED
10	+B AMP	BLUE

16, 17 and 32 - 60 cycles
16-Z and 32-Z - 25 cycles

(Late Production)

F.A.D. ANDREA, INC.

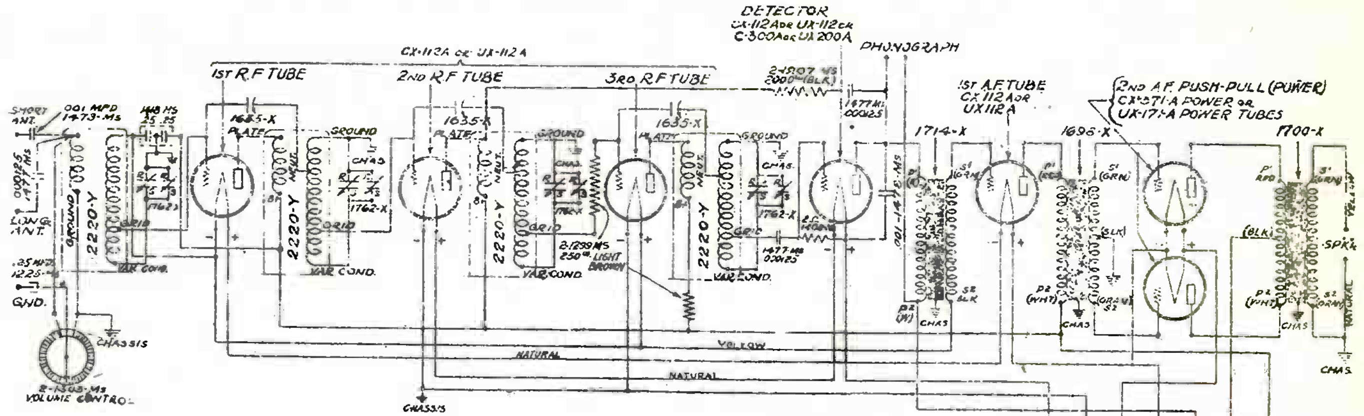

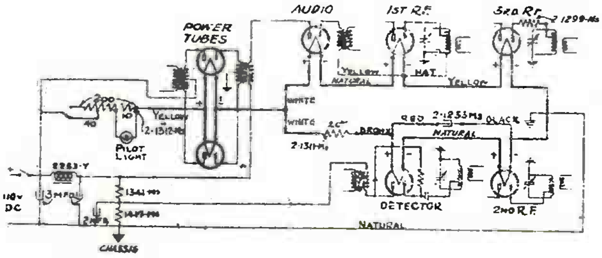

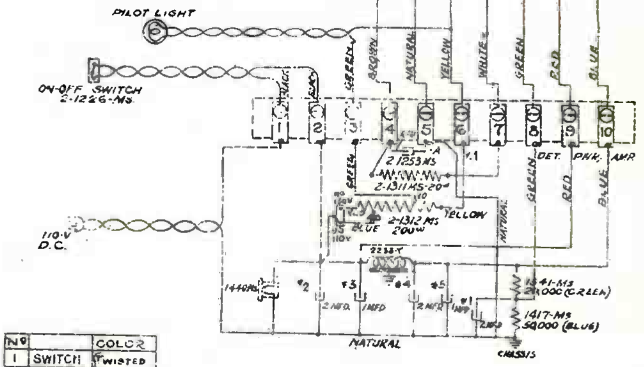

No		COLOR
1	SWITCH	TWISTED
2	SWITCH	PAIR
3	Pilot Light	GREEN
4	+A Det.	BROWN
5	Chassis	NATURAL
6	+A Pwr	YELLOW
7	-A Pwr	WHITE
8	+B Det.	GREEN
9	+B Pwr	RED
10	+B Amp	BLUE

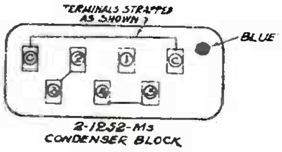

Fada 18 DC Receiver
for use with direct current only

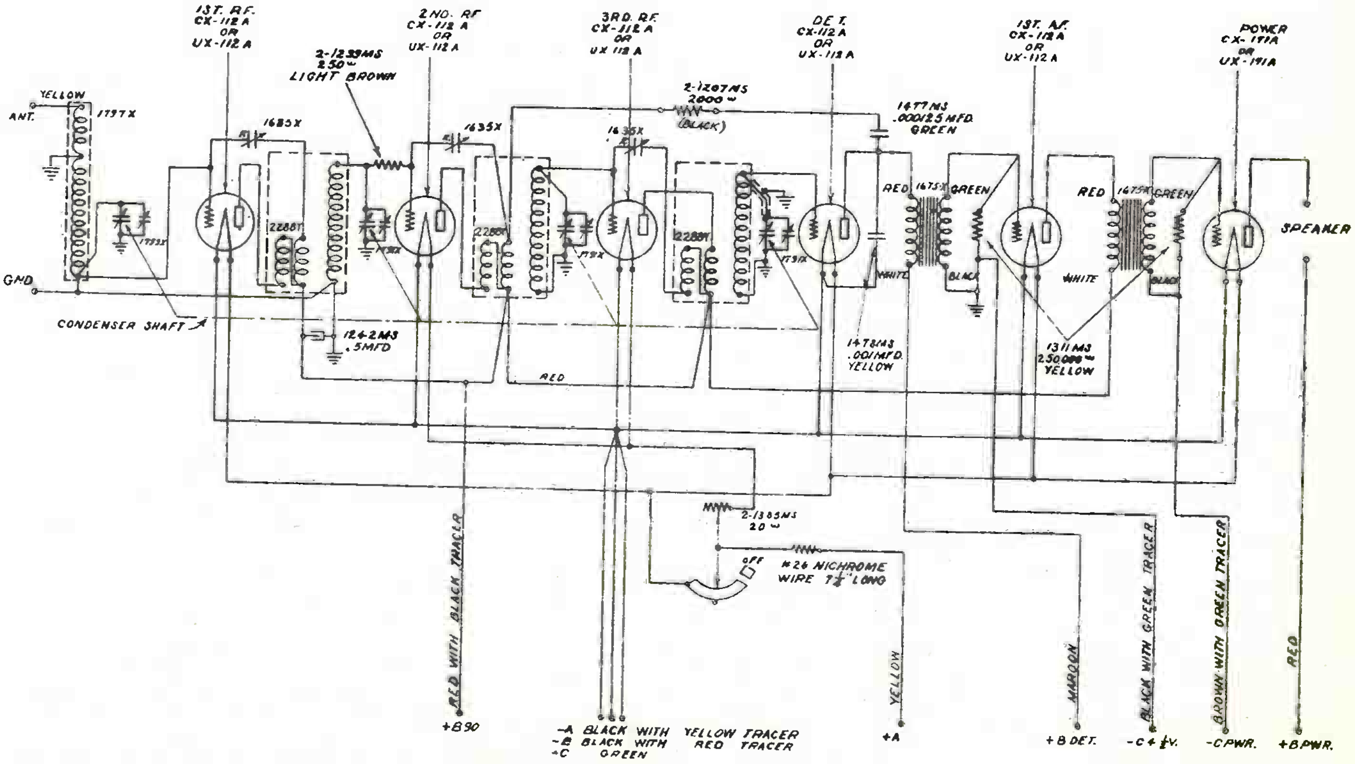

Fada 22 Battery Model Receiver

BATTERY CABLE 2090Y

F.A.D. ANDREA, INC.

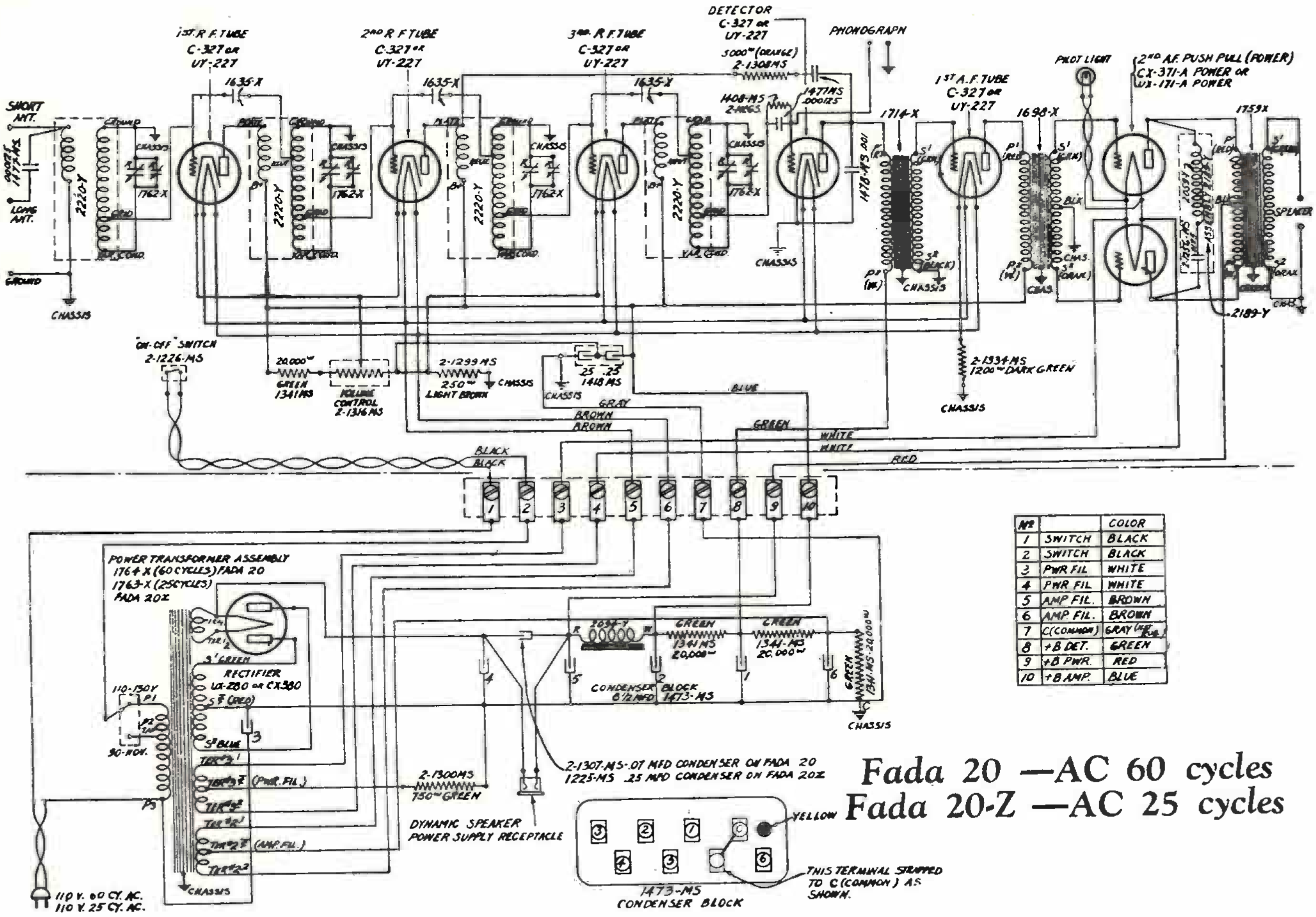

Nº		COLOR
1	SWITCH	BLACK
2	SWITCH	BLACK
3	PWR FIL	WHITE
4	PWR FIL	WHITE
5	AMP FIL.	BROWN
6	AMP FIL.	BROWN
7	C(COMMON)	GRAY
8	+B DET.	GREEN
9	+B PWR.	RED
10	+B AMP.	BLUE

Fada 20 —AC 60 cycles
Fada 20-Z —AC 25 cycles

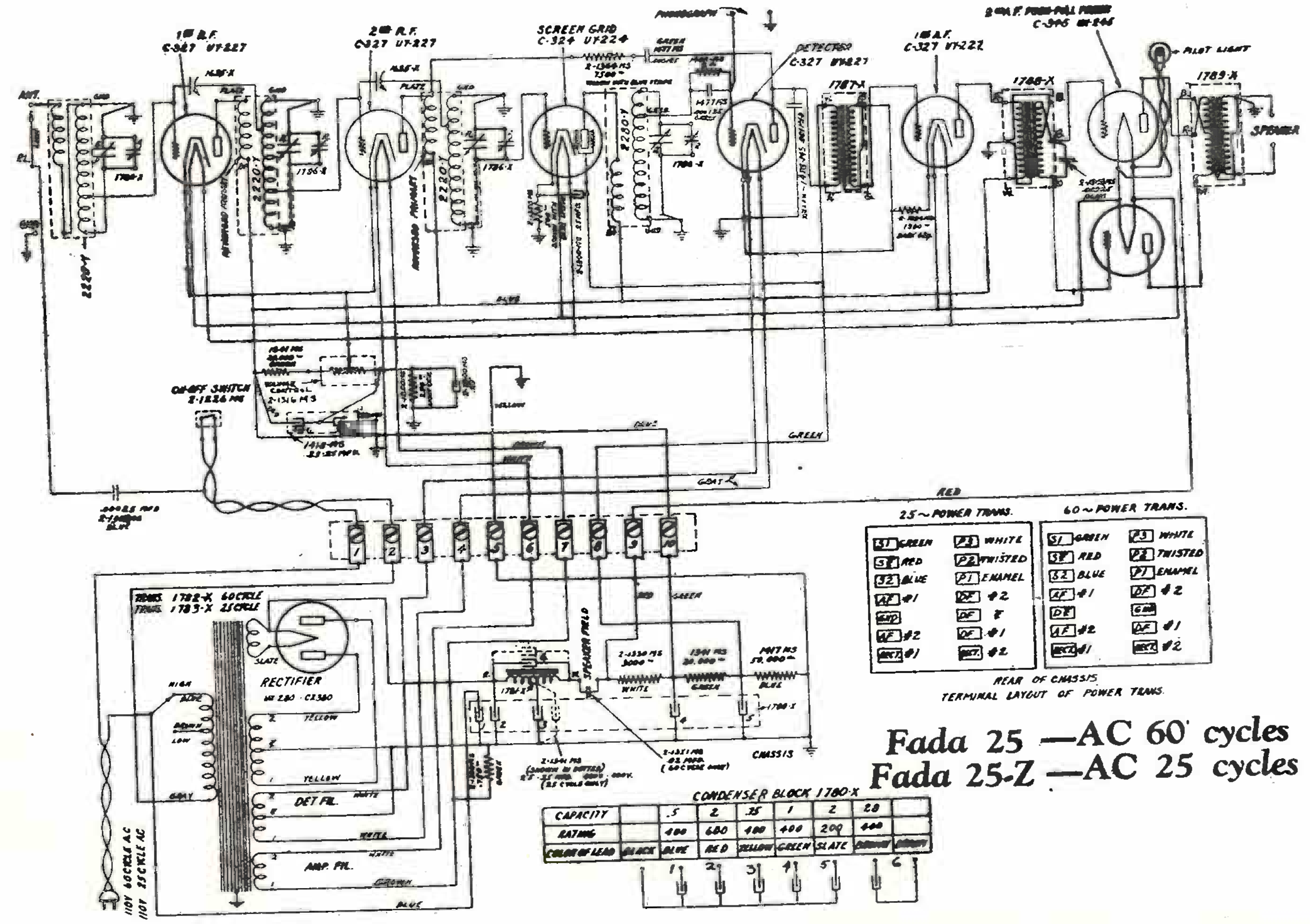

25~ POWER TRANS.

S1 GREEN	P3 WHITE
SF RED	P2 TWISTED
S2 BLUE	P1 ENAMEL
AF #1	DF #2
GND	DF C
AF #2	DF #1
RECT. #1	RECT. #2

60~ POWER TRANS.

S1 GREEN	P3 WHITE
SF RED	P2 TWISTED
S2 BLUE	P1 ENAMEL
AF #1	DF #2
DF	GND
AF #2	DF #1
RECT. #1	RECT. #2

REAR OF CHASSIS
TERMINAL LAYOUT OF POWER TRANS.

Fada 25 —AC 60 cycles
Fada 25-Z —AC 25 cycles

CONDENSER BLOCK 1780-X

CAPACITY		.5	2	.25	1	2	28	
RATING		400	600	400	400	200	440	
COLOR OF LEAD	BLACK	BLUE	RED	YELLOW	GREEN	SLATE	BROWN	BROWN

F.A.D. ANDREA, INC.

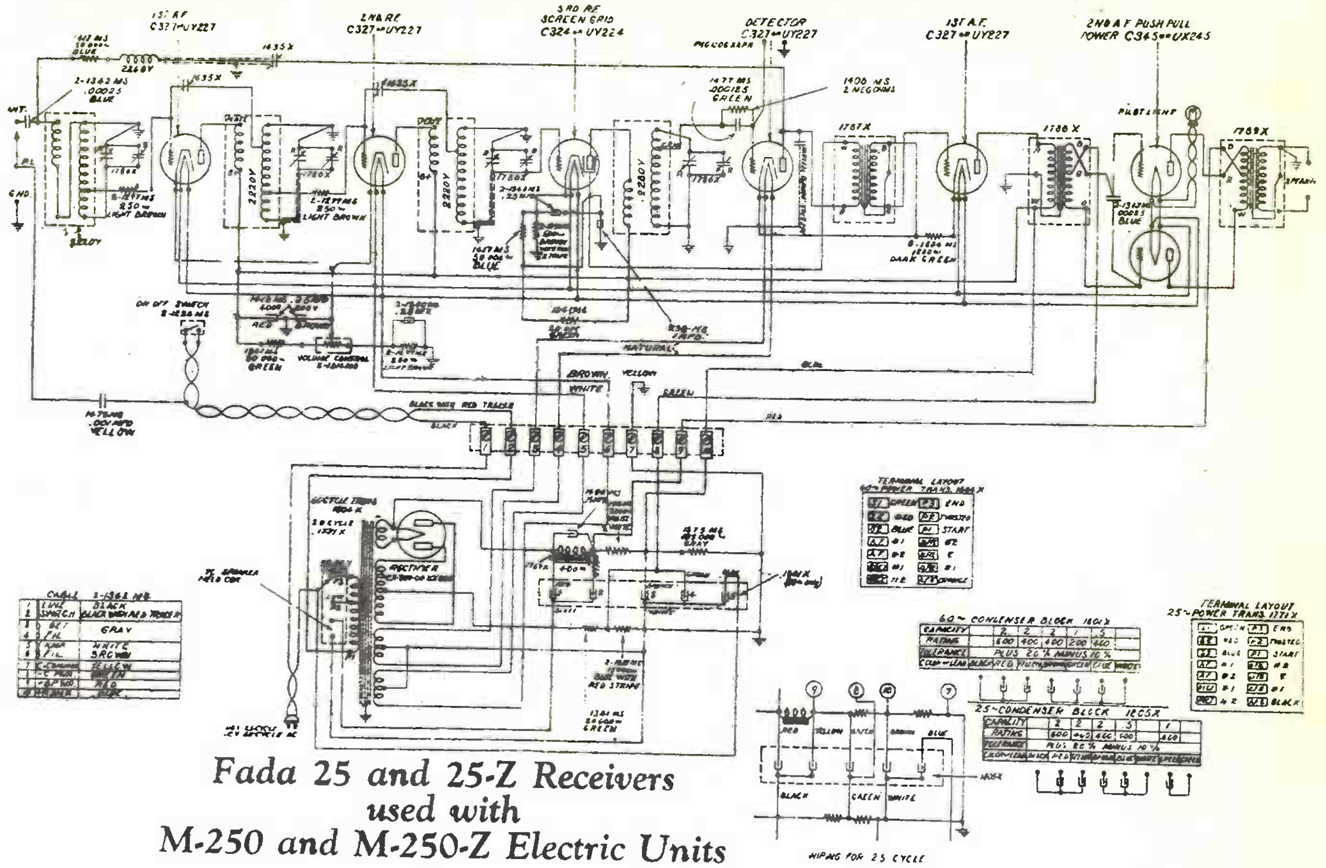

Fada 25 and 25-Z Receivers
used with
M-250 and M-250-Z Electric Units

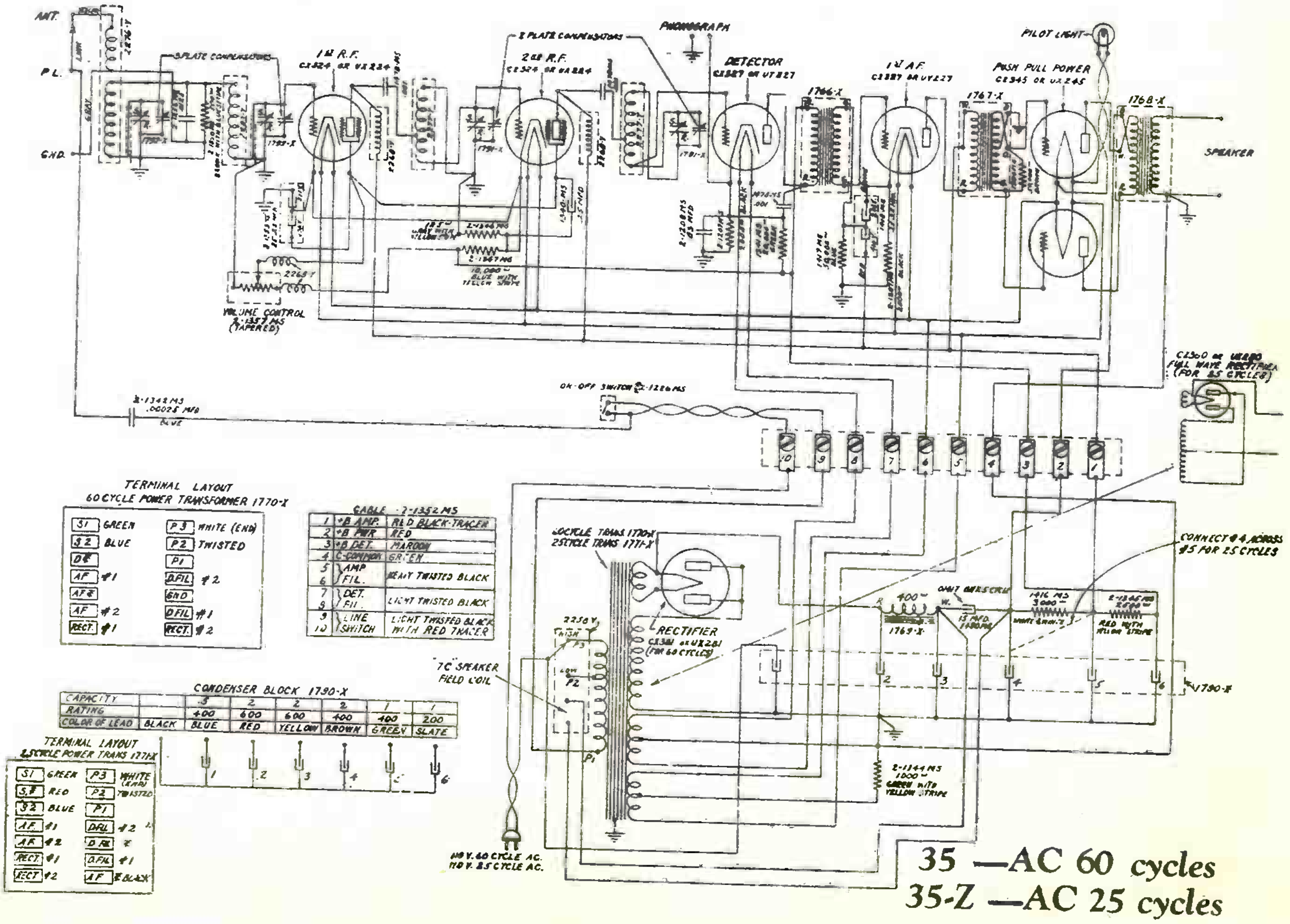

35 —AC 60 cycles
35-Z —AC 25 cycles

F.A.D. ANDREA, INC.

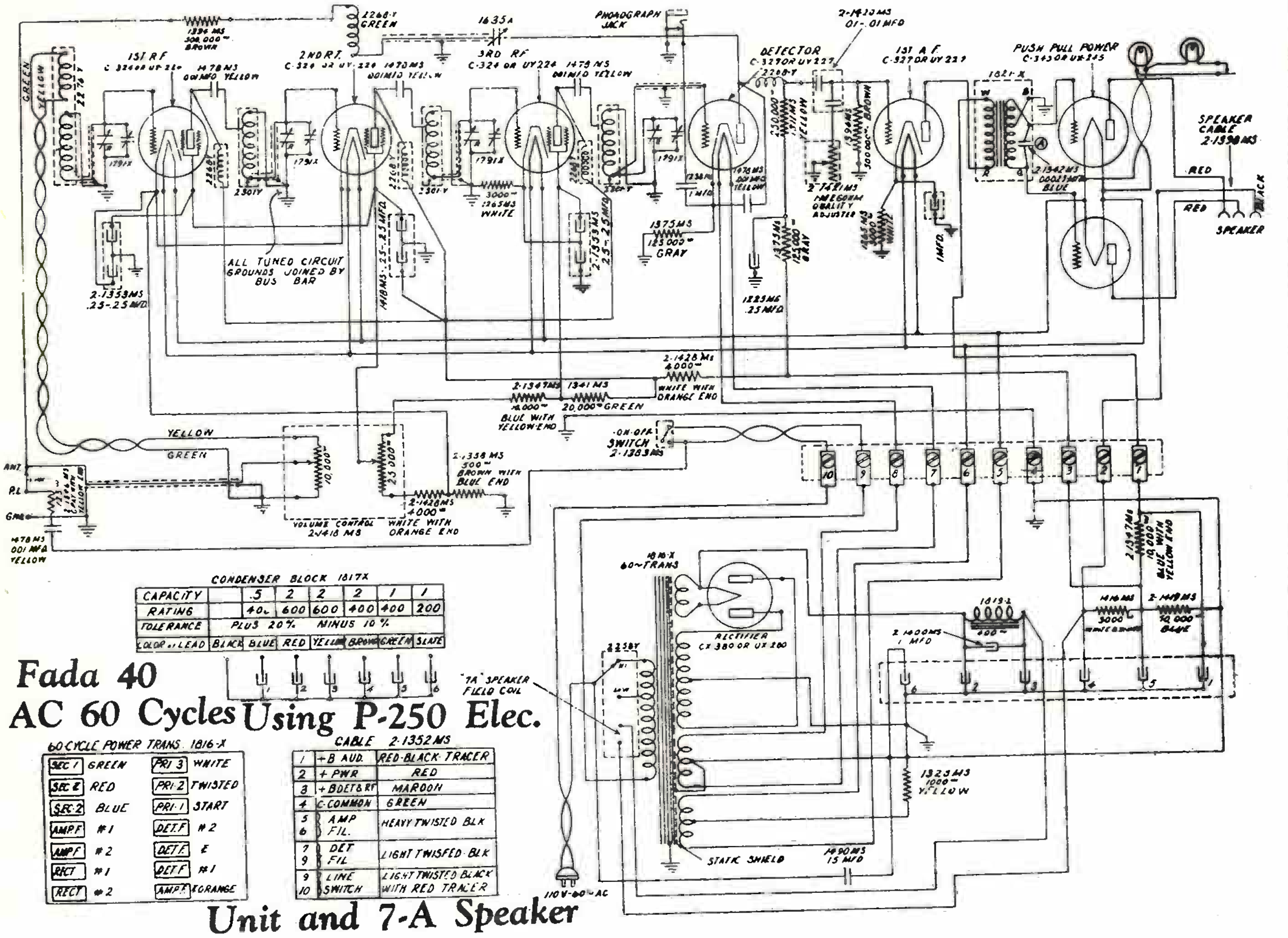

CONDENSER BLOCK 1817X

CAPACITY		.5	2	2	2	1	1
RATING		400	600	600	400	400	200
TOLERANCE	PLUS 20% MINUS 10%						
COLOR of LEAD	BLACK	BLUE	RED	YELLOW	BROWN	GREEN	SLATE

Fada 40
AC 60 Cycles Using P-250 Elec. Unit and 7-A Speaker

60 CYCLE POWER TRANS. 1816-X

SEC 1	GREEN	PRI 3	WHITE
SEC 2	RED	PRI 2	TWISTED
SEC 2	BLUE	PRI 1	START
AMP F	#1	DET F	#2
AMP F	#2	DET F	E
RECT	#1	DET F	#1
RECT	#2	AMP F	E ORANGE

CABLE 2-1352 MS

1	+B AUD.	RED-BLACK-TRACER
2	+PWR	RED
3	+B DET & RF	MAROON
4	C-COMMON	GREEN
5 6	AMP FIL.	HEAVY TWISTED BLK
7 9	DET FIL	LIGHT TWISTED BLK
9 10	LINE SWITCH	LIGHT TWISTED BLACK WITH RED TRACER

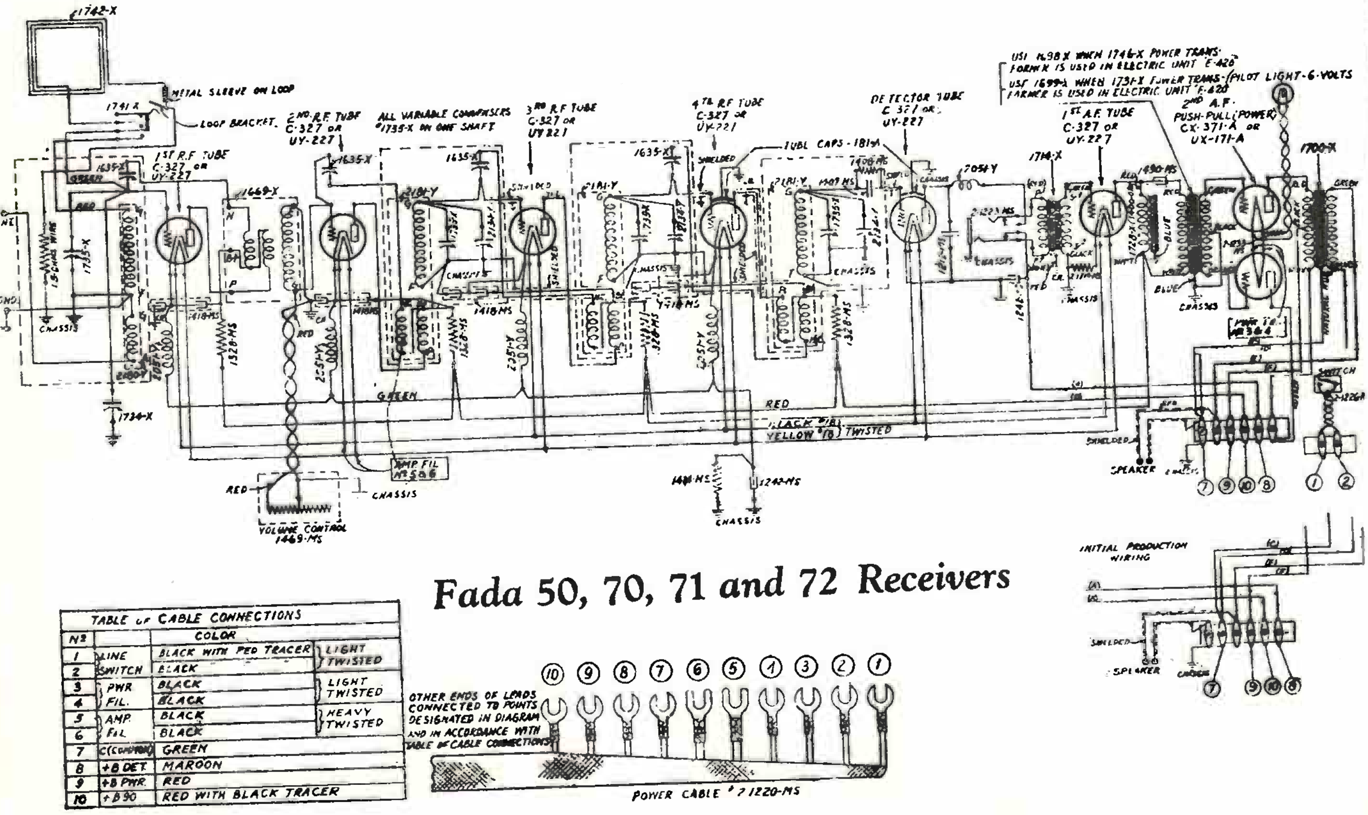

Fada 50, 70, 71 and 72 Receivers

TABLE OF CABLE CONNECTIONS

Nº		COLOR	
1	LINE SWITCH	BLACK WITH RED TRACER	LIGHT TWISTED
2		BLACK	
3	PWR FIL.	BLACK	LIGHT TWISTED
4		BLACK	
5	AMP. FIL	BLACK	HEAVY TWISTED
6		BLACK	
7	C (COMMON)	GREEN	
8	+B DET.	MAROON	
9	+B PWR.	RED	
10	+B 90	RED WITH BLACK TRACER	

F.A.D. ANDREA, INC.

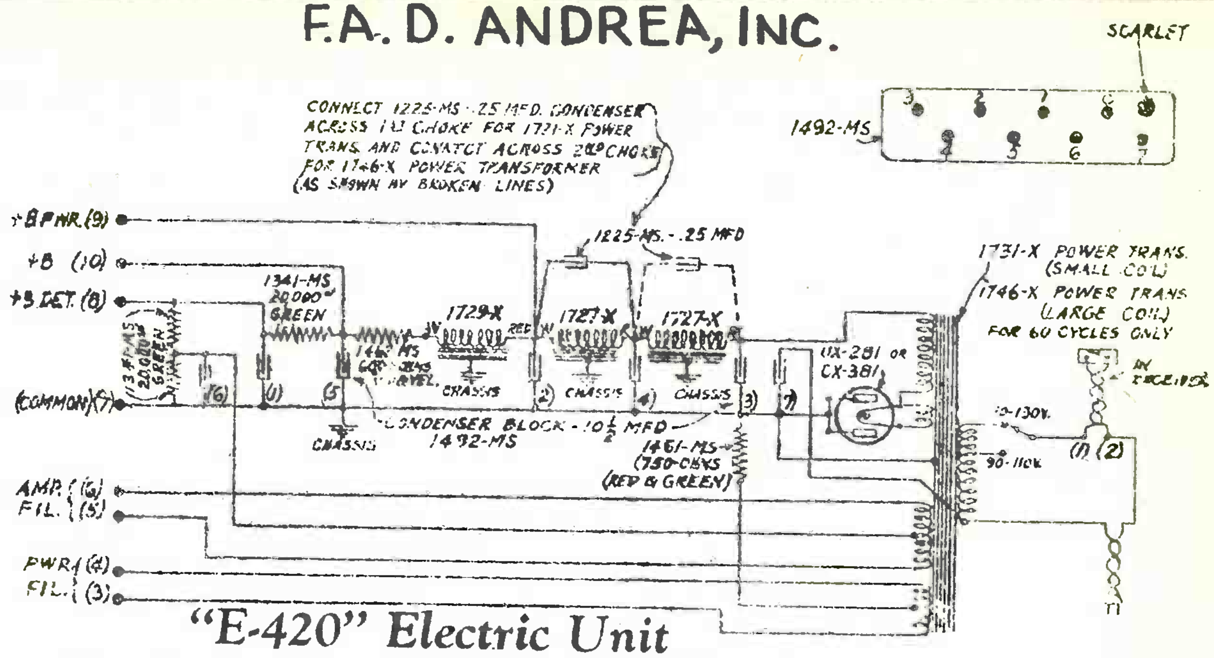

"E-420" Electric Unit —For Fada 50, 70, 71 and 72 Receivers

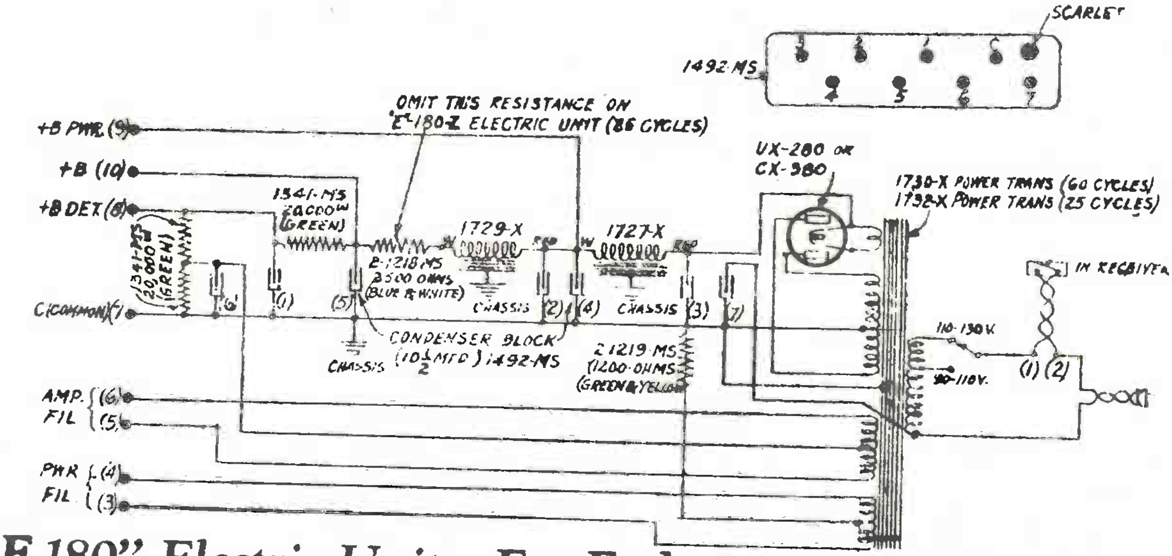

"E-180" Electric Unit—For Fada 50 and 70 Receivers

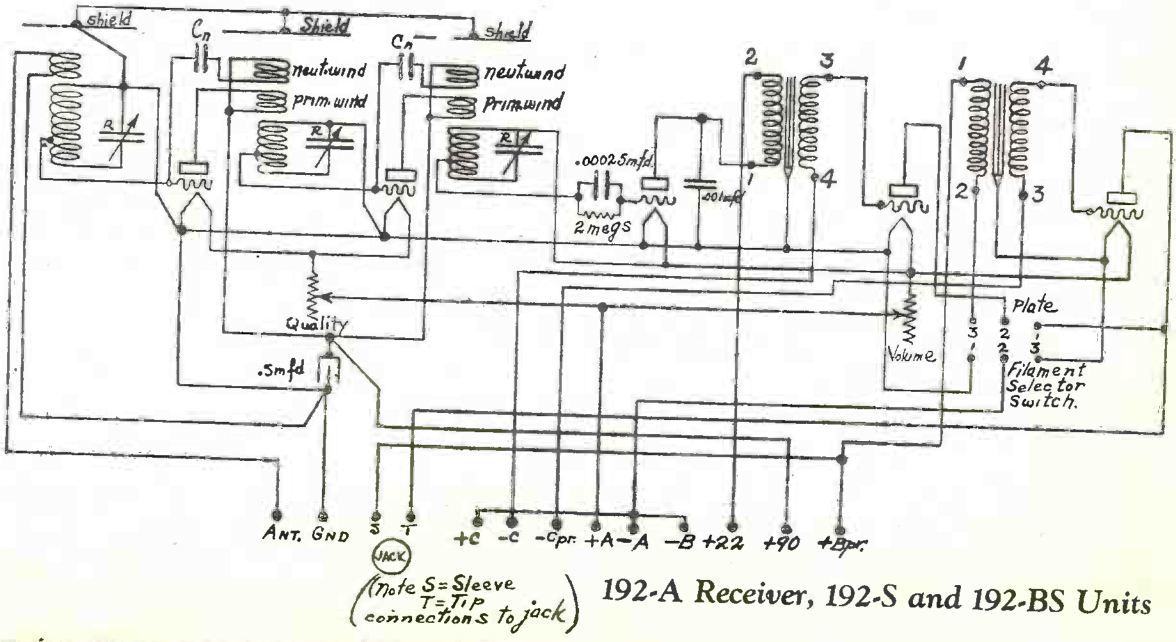

192-A Receiver, 192-S and 192-BS Units

F.A.D. ANDREA, INC.

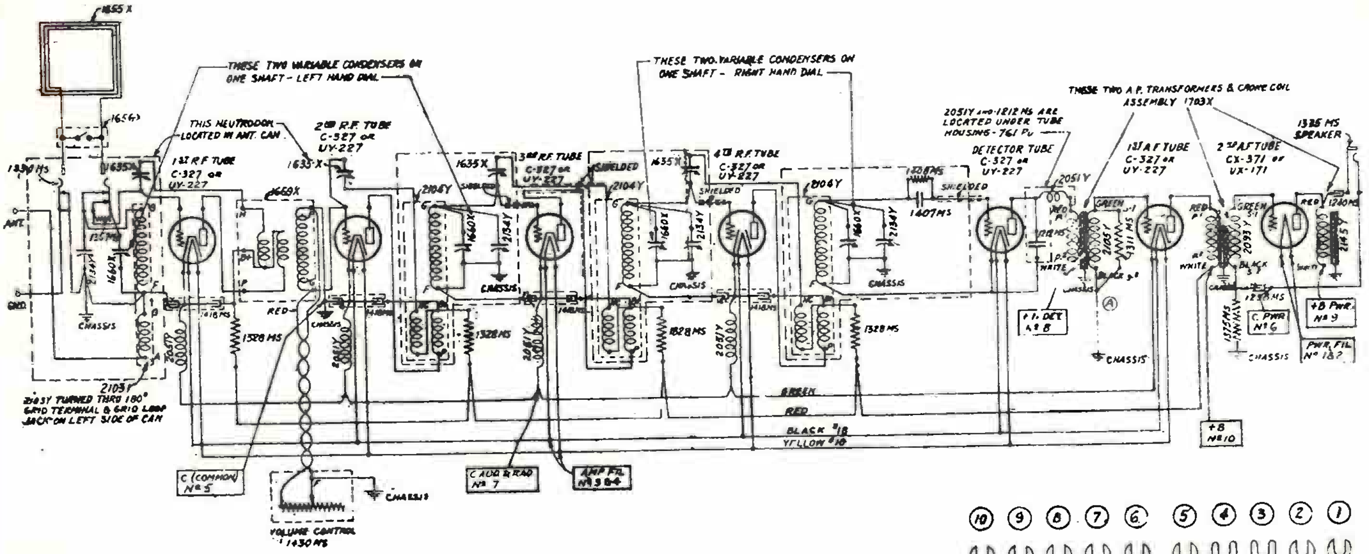

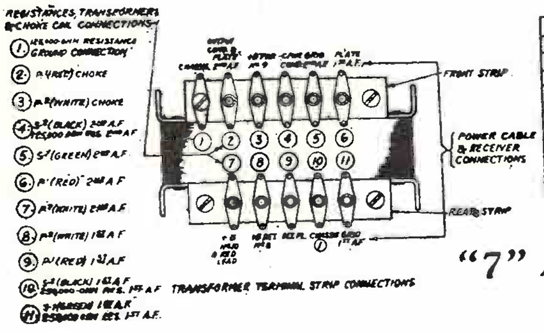

TABLE OF CABLE CONNECTIONS		
NR		COLOR
1	PWR. FIL.	BLACK } LIGHT TWISTED
2	PWR. FIL.	BLACK }
3	AMP. FIL	BLACK }
4	AMP. FIL	BLACK } HEAVY TWISTED
5	C (COMMON)	GREEN
6	C PWR	BROWN WITH WIDE GREEN TRACER
7	C AUD & RAD	BLACK WITH WIDE GREEN TRACER
8	+B DET	MAROON
9	+B PWR	RED.
10	+B	RED WITH WIDE BLACK TRACER

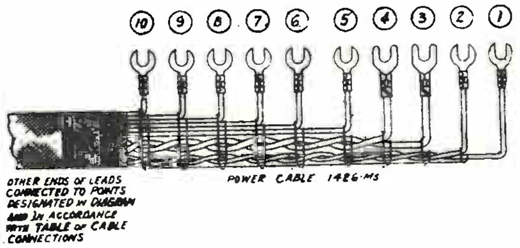

OTHER ENDS OF LEADS CONNECTED TO POINTS DESIGNATED IN DIAGRAM AND IN ACCORDANCE WITH TABLE OF CABLE CONNECTIONS

"7" AC 475-UA or CA and SF45/75-UA or CA
472-UA or CA and SF45/72-UA or CA

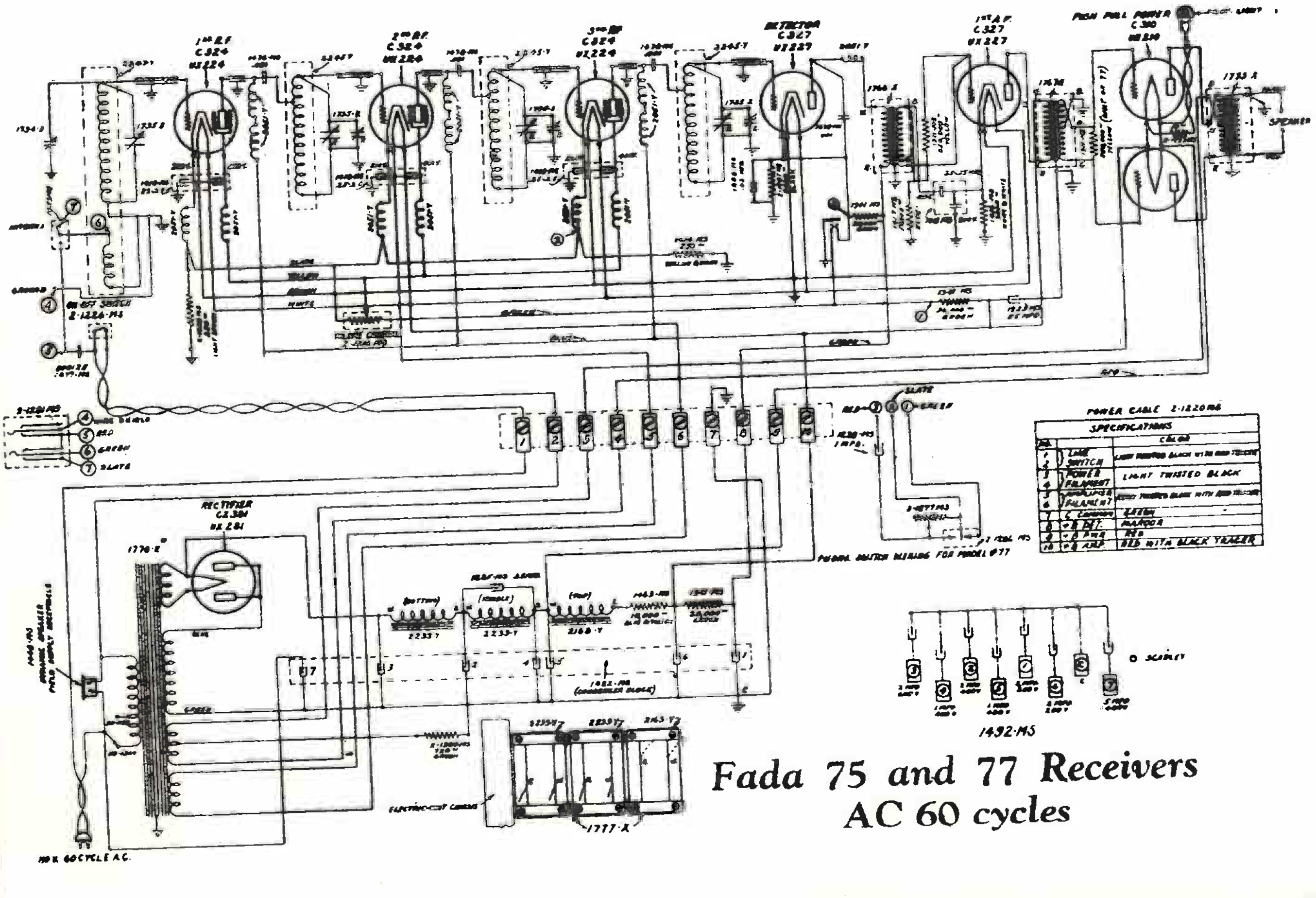

POWER CABLE 2-1220MS

SPECIFICATIONS		
NO.		COLOR
1 2	LINE SWITCH	LIGHT TWISTED BLACK WITH RED TRACER
3 4	POWER FILAMENT	LIGHT TWISTED BLACK
5 6	AMPLIFIER FILAMENT	HEAVY TWISTED BLACK WITH RED TRACER
7	C COMMON	GREEN
8	+B DET.	MAROON
9	+B PWR	RED
10	+B AMP.	RED WITH BLACK TRACER

Fada 75 and 77 Receivers
AC 60 cycles

Radio Service Data Sheet

FADA "SPECIAL" MODEL 265-A AND FADA "7" MODEL 475-A

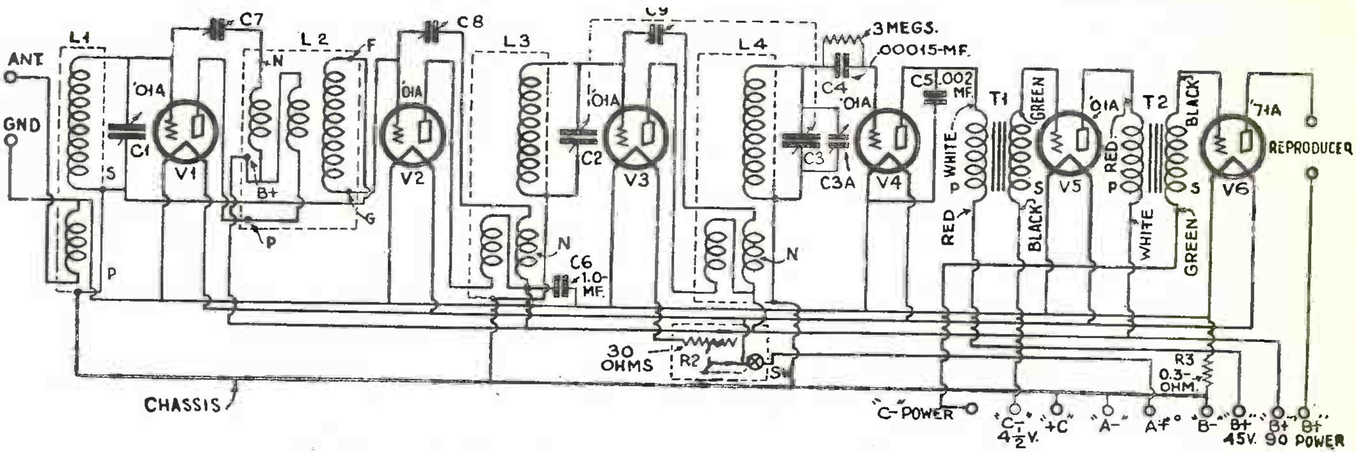

Circuit connections in the "Special" Fada "Model 265-A" receiver, battery-operated.

Note: The FADA model 265-A receiver shown above is used with the RP-65 Unit. The FADA 475-A battery operated loop set shown below is used with the SF 45/75 receivers.

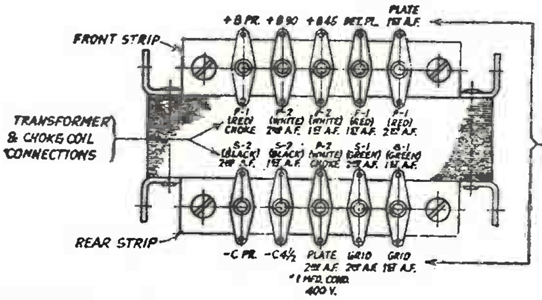

Detail of the connection strip (on the audio assembly) provided for the battery-cable connections in the "Model 475-A." The color-code of the cable appears in this illustration.

The following is the procedure to be followed for neutralizing the Fada "Model 265-A" battery set: the neutralizing condensers C7, C8, C9 are located from left to right in the set.

Balance V3, V2, V1, in the same order, using a tube with an open filament. Adjust on a wavelength between 250 and 300 meters. To neutralize this receiver it is recommended that a type '01A tube be used in the detector position, V4; replacing, when balanced, with a type '00A tube.

The compensating condenser C3A is located at the right of the third tuning condenser and is adjusted with a long screwdriver.

In the Fada "Model 475-A" receiver, C7 is accessible through the left hole (facing front of set) in terminal board in first can; and the second neutralizing condenser C8 through the right hole. Condenser C9 is reached through the right-hand hole in the second can; and C10, through the right-hand hole in the third can. Each of these condensers is numbered according to the stage it balances. It is recommended that headphones be used to obtain a null point when balancing the receiver. Tune for a strong signal on a wavelength of 250 to 300 meters, when balancing this set, using the loop for signal pick-up.

The input circuit compensator C1A is the thumb screw marked "antenna adjuster" on the terminal board in the first can. Condensers C2A, C3A and C4A are accessible through holes in their respective shield cans.

Wavelength compensation in the various tuned stages is obtained by tuning to a strong local station (using the loop) on a wavelength between 250 and 300 meters. After obtaining the loudest signal at a single point, remove the loop plugs and connect an aerial and ground to the set. Without moving left-hand dial, turn antenna adjuster screw to left or right to point of maximum signal.

The following values are used in this set: C1, C2, C3, C4, .00035-mf.; C5, .001-mf.; C6, C12, C13, C14, C15, C16, 0.5-mf.; C11, .00015- to .00025-mf.; C17, 1.mf. Resistors R1, R2, R3, R4 are 1,000 ohms; R5, 250,000 ohms; R6, 500,000 ohms; R7, 125,000 ohms; R8, 500,000 ohms; R9, 6 to 20 ohms. Type '01A tubes are used as V1, V2, V3, V4, V5 (or a type '00A may be used here) and V6; and a '71A for V7. Unit L2 is an untuned R.F. transformer.

When servicing the "475-A" check for open resistors R1, R2, R3 or R4; also for an open output condenser C17. If it is difficult to stop circuit oscillation, determine whether a low-resistance ground is being used; and whether any of the by-pass condensers are open.

In both the "265-A" and the "475-A" receivers the filament rheostat and off-on switch are combined in one unit. Both of these sets are two-dial control.

In the "high gain" Fada "475-A," the R.F. chokes RFC1, RFC2, RFC3, RFC4, RFC5 are inserted in the positive "A" leads of the first five tubes to prevent circuit oscillation due to this common lead.

The battery cable for the "475-A" connects to terminal strips on the unit comprising T1, T2 and AFC. These strips are shown in an accompanying illustration.

Note the connections and values of R5, R6, R7. An open R1, R2, R3, or R4 resistor may indicate a short in C7, C8, C9, C10.

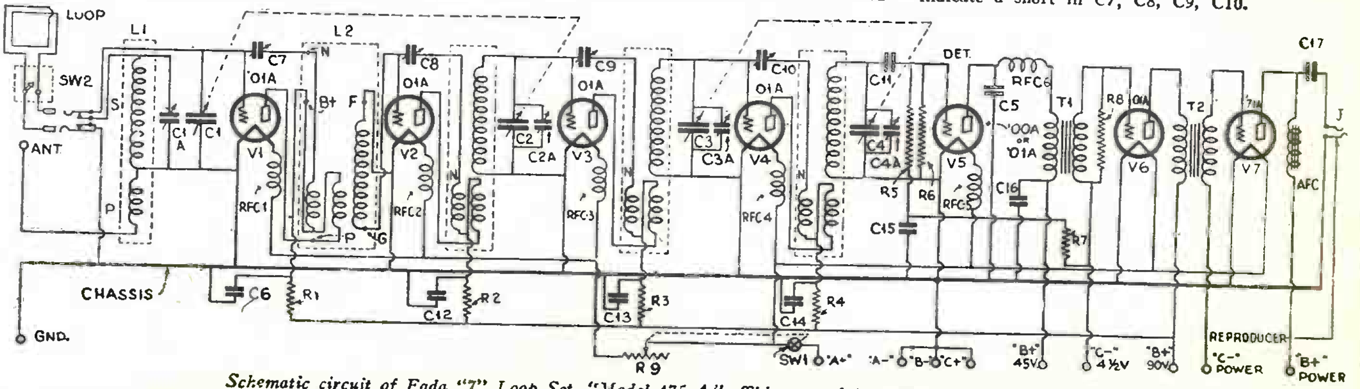

Schematic circuit of Fada "7" Loop Set, "Model 475-A." This powerful receiver is battery operated.

F. A. D. ANDREA, INC.

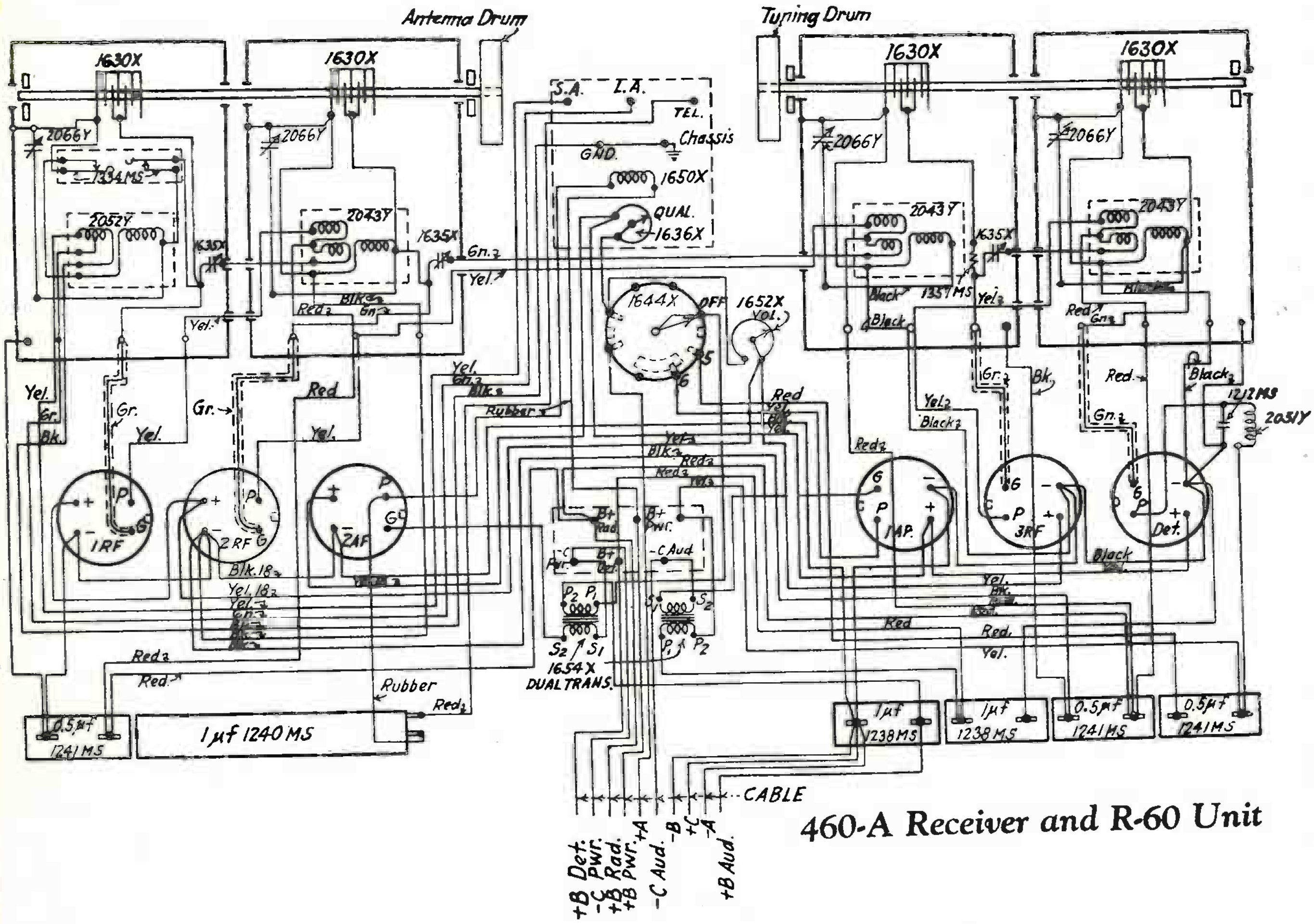

460-A Receiver and R-60 Unit

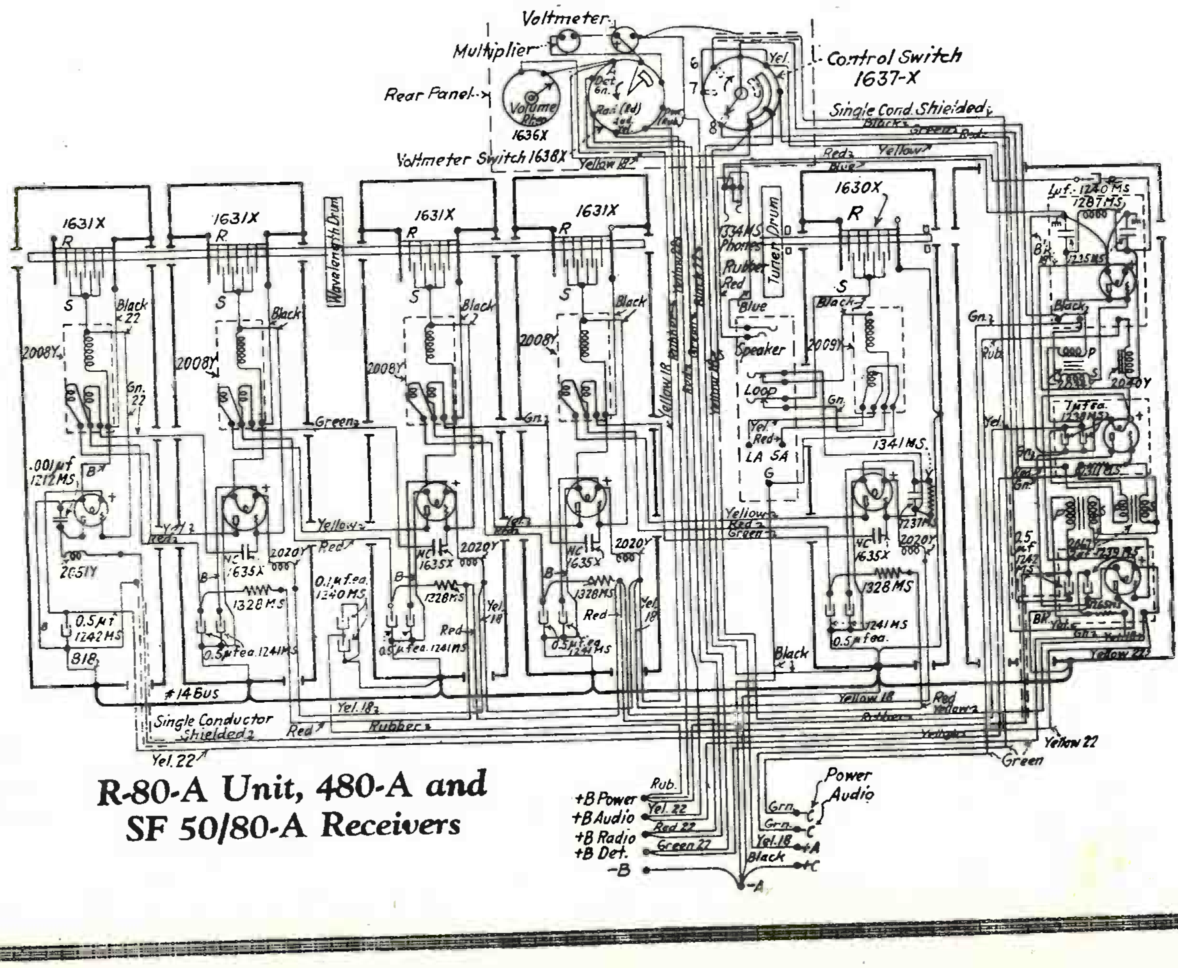

R-80-A Unit, 480-A and SF 50/80-A Receivers

F.A.D. ANDREA, INC.

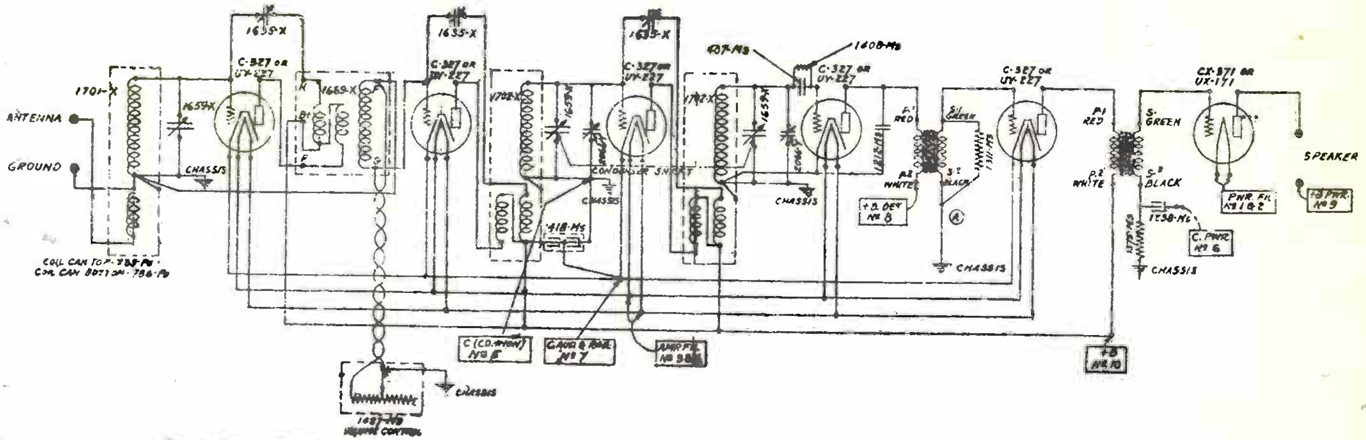

TABLE OF CABLE CONNECTIONS		
NO		COLOR
1	PWR FIL.	BLACK } LIGHT TWISTED
2	PWR F.L	BLACK }
3	AMP F.L	BLACK }
4	AMP FIL.	BLACK } HEAVY TWISTED
5	C (COMMON)	GREEN
6	C PWR	BROWN WITH WIDE GREEN TRACER
7	CAMP & RAD.	BLACK WITH WIDE GREEN TRACER
8	+B DET.	MAROON
9	+B PWR.	RED
10	+B	RED WITH WIDE BLACK TRACER

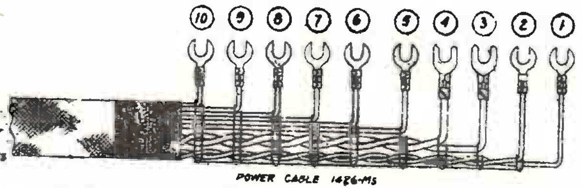

OTHER ENDS OF LEADS CONNECTED TO POINTS DESIGNATED IN DIAGRAM AND IN ACCORDANCE WITH TABLE OF CABLE CONNECTIONS

"Special" AC Receiver 265-UA or CA and RP-65-UA or CA
262-UA or CA and RP-62-UA or CA

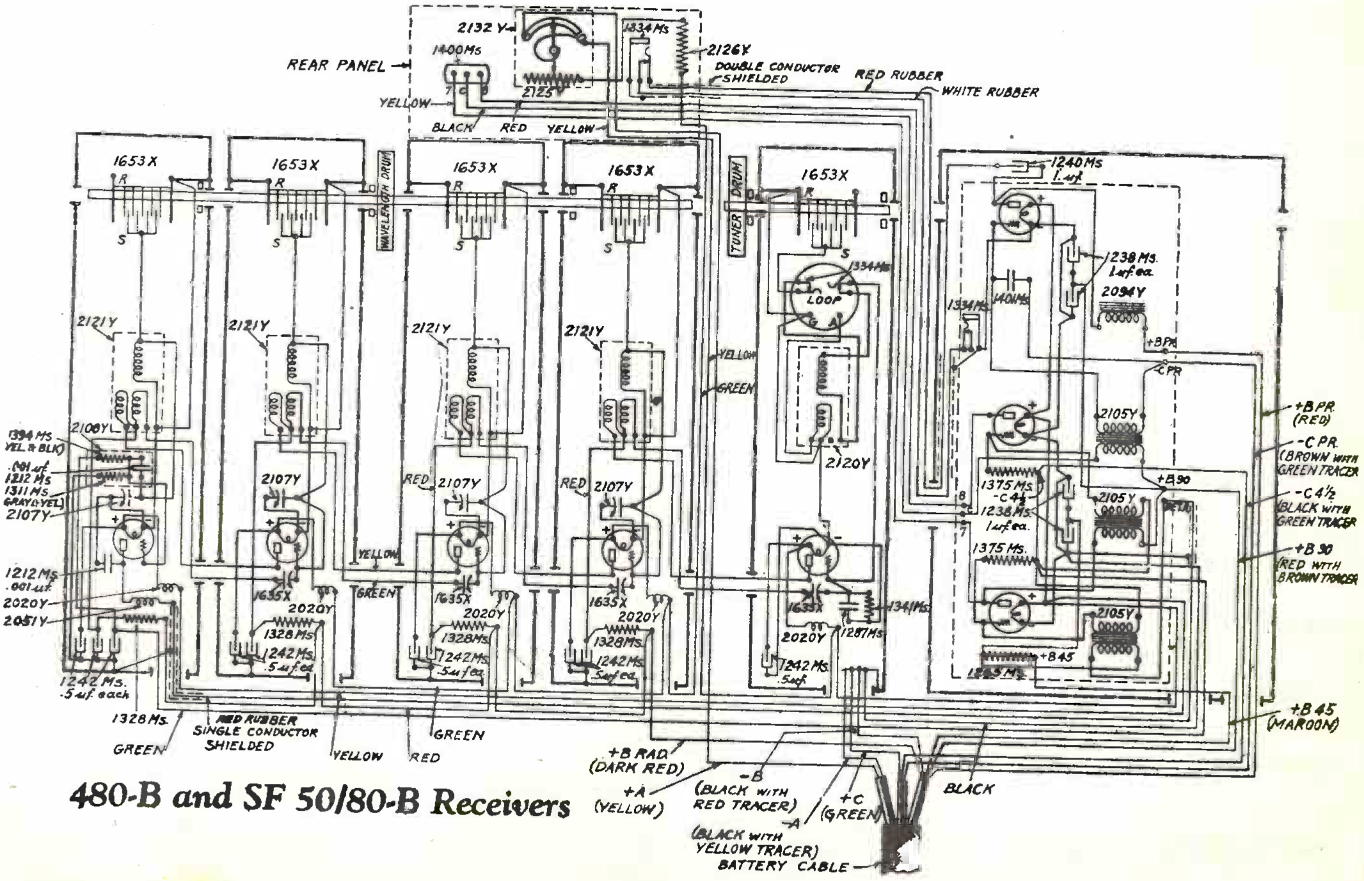

480-B and SF 50/80-B Receivers

F.A.D. ANDREA, INC.

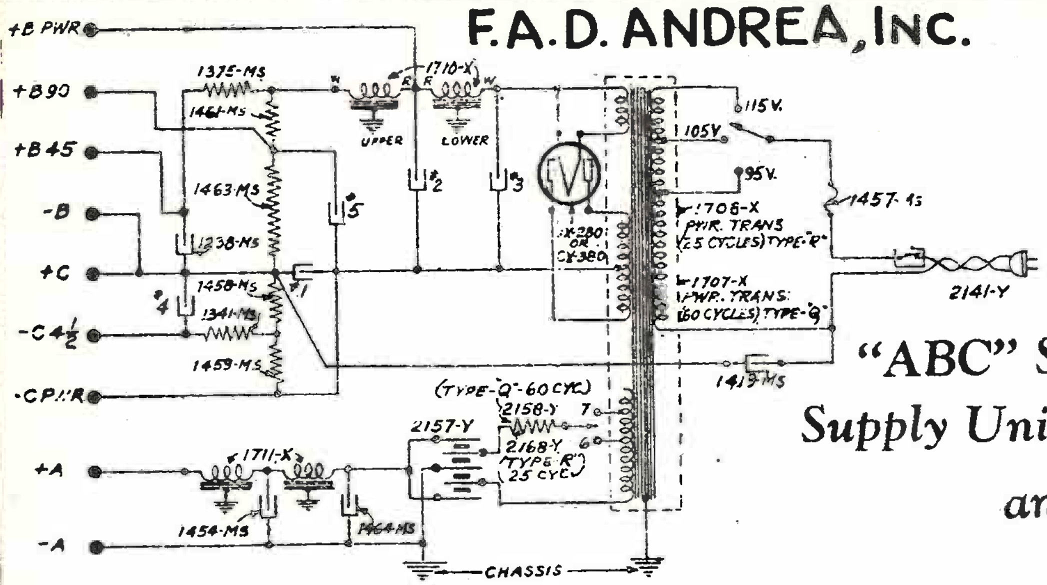

"ABC" Six Volt Tube Supply Unit — Types 66-Q and 62-R

The FADA "A-B-C" Power unit shown at the right uses three Elkon. 1500-mf. "dry" condensers in the "A" filter system. If a very bad hum is heard in installations using this power unit, check the "dry" condensers, C1, C2, C3. The trouble is most conveniently checked by disconnecting one condenser after the other, until the hum suddenly drops. As the hum is less with all of the condensers out of the circuit than with a single defective condenser in circuit, the location of the defective unit is simple.

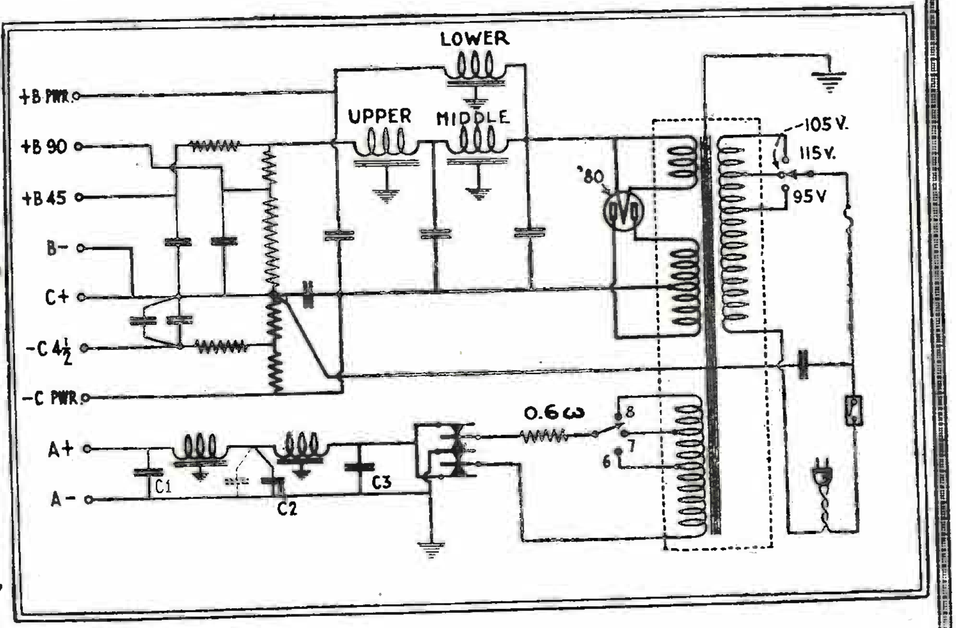

"ABC" six-volt tube-supply unit of Fada types "86-V" and "82-W," illustrating an application of the 1500-mf. dry "A" condensers.

Type "J" unit for 25 cycle current is similar, except that a 1706X power transformer is used instead of the 1696X transformer as indicated on the type "C" unit for 60 cycles.

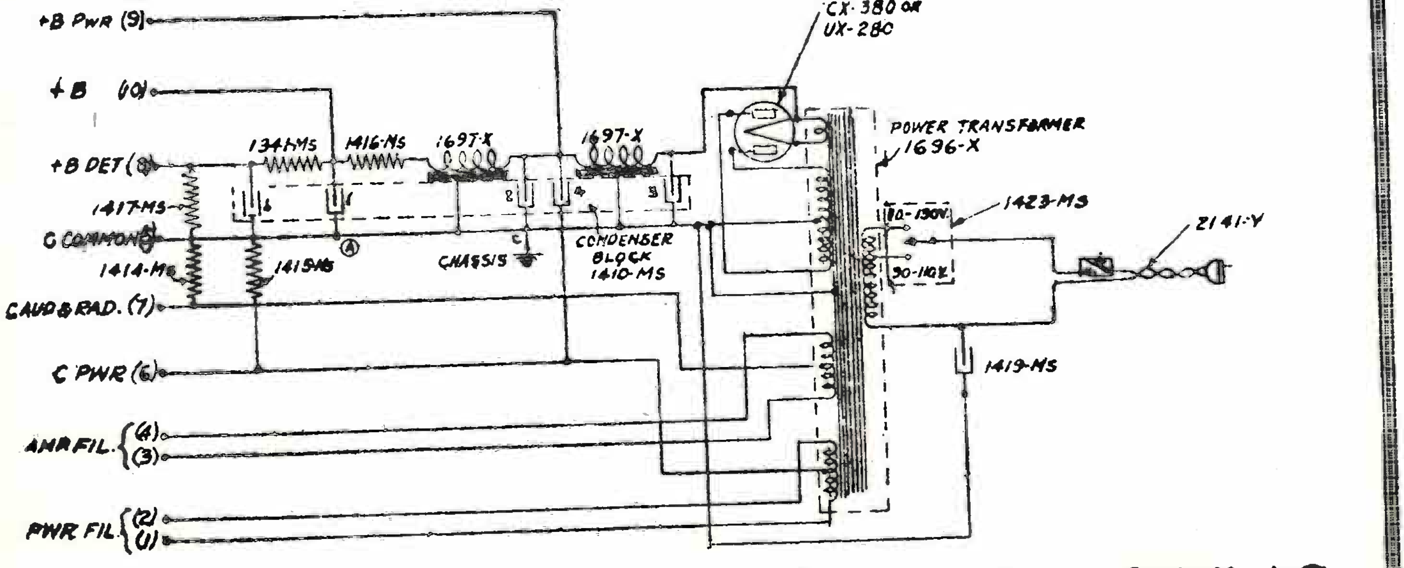

Type "C" Electric Unit, used with "Special" and "7" AC

FEDERAL RADIO CORP.

FEDERAL ORTHO-SONIC RECEIVER

TYPE – D

Condenser C1, 100 mmf.; C3, .0005 mf.; C2, 42 mmf.; C6, 1.0 mf.; C4, 200 mmf.; C5, .001 mf.; The grid-plate capacity of about 9 mmf. has been represented in dotted lines: C7, .05 mf.; R1, 1 meg.; L1, 165 mh.

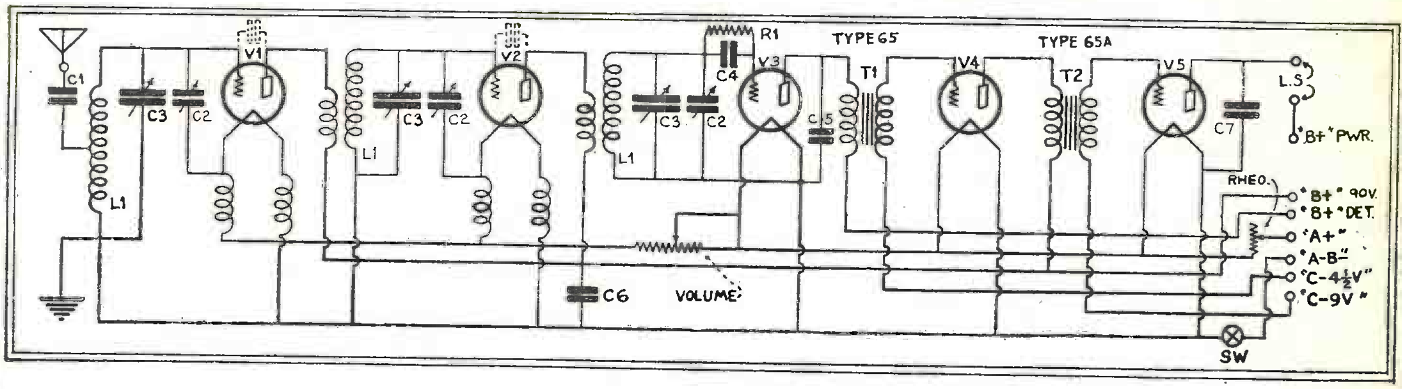

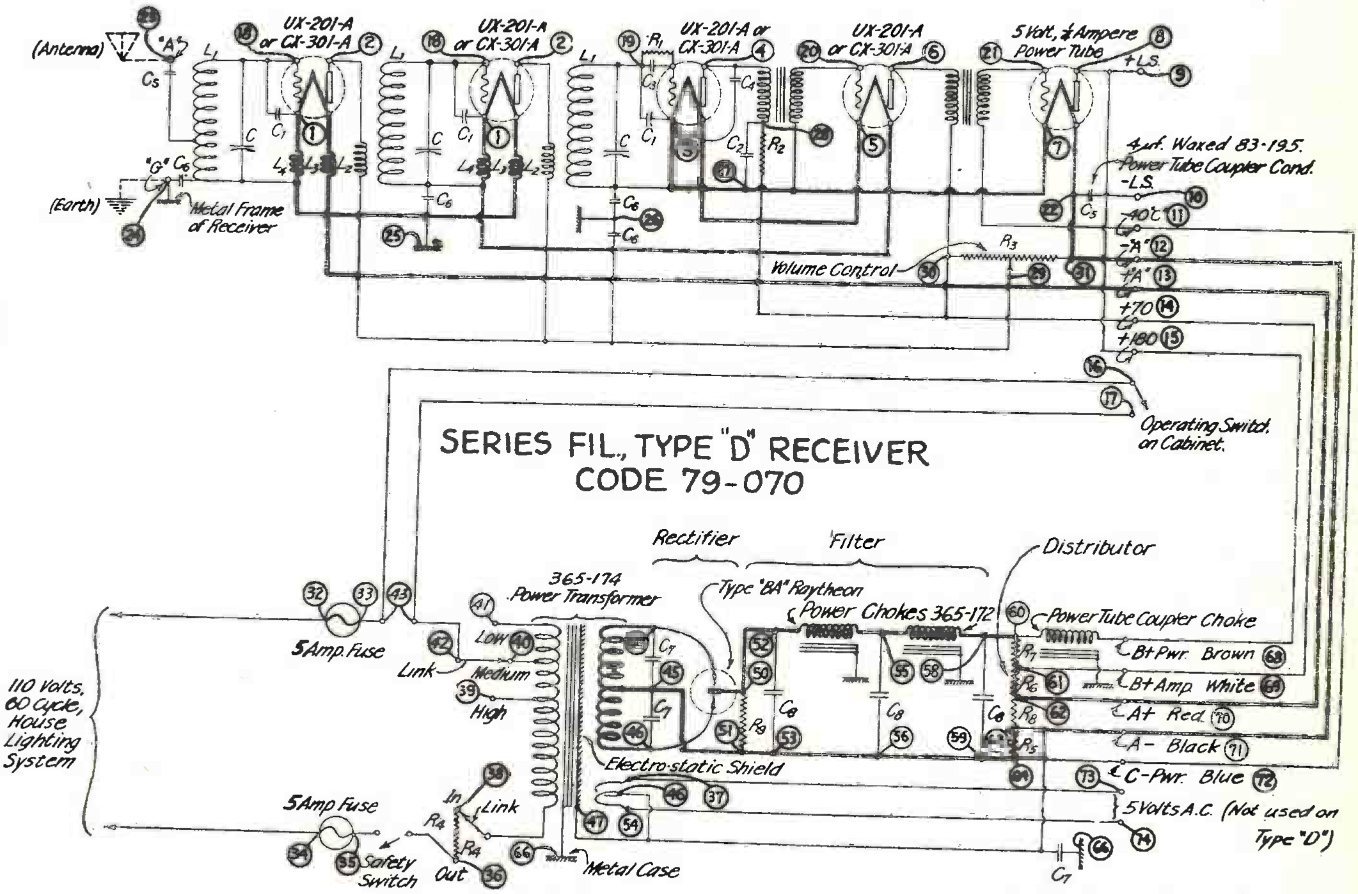

SERIES FIL., TYPE "D" RECEIVER
CODE 79-070

60 Cycle Power Supply Unit, Code 79-001.

(Filament Circuit in Heavy Lines)

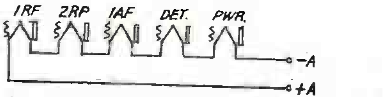

Equivalent Series Filament Arrangement

C_7	83-151	(2 - ½ µf.)
C_8	83-150	4 µf.
R_4	97-180	4 ohms
R_5	79-149	135 ohm section
R_6	79-149	200 " "
R_7	79-149	350 " "
R_8	79-149	2000 ohm section
R_9	97-185	20,000 " "

C	73-130
C_1	Balance Cond.
C_2	83-184 1µf.
C_3	73-287 .0002µf.
C_4	72-299 .001 "
C_5	83-195 4µf.
C_6	83-189 and 83-190 .5µf. each.
C_5	72-238 .0001µf.
R_1	1 Meg ohm (not shown 10667)
R_2	97-176, 160,000 ohms.
R_3	79-155 50,000 ohms.
L_1	71-223 and 79-124
L_2	Plate Coil (Green, Single Winding)
L_3	+F Coil (Green, Double Winding)
L_4	-F Coil (White, Double Winding)

Radio Service Data Sheets

FEDERAL MODEL K

In the Model K receiver the volume control is a 700,000-ohm variable resistor R6, in shunt to the secondary of T6. The plate-supply resistors are mounted in the set chassis, instead of the power unit.

The first consideration is the line-voltage. Having noted its value, plug the 3-amp. fuse F into the pair of clips marked with the nearest corresponding voltage. Continuity tests are made with cable disconnected from the power unit and all tubes removed from receiver. The terminal blocks of the receiver chassis and power pack are illustrated. When testing connections on latter, remove all cable leads from the chassis and also the fuse, and plug into the A.C. line. Connect a 0-150 V., A.C. meter between 1 and 7, or between 1 and 16 (note in some units 7, 8 and 9 are the incoming common terminals, in others 16,, 17 and 18 are common). The meter should read the A.C. line voltage, or the cord is defective. Next, replace the fuse in the proper clips and, if the meter reads the same between 1 and both sides of the fuse, fuse is good. Short posts 1 and 2 with a piece of wire, and put the type '80 tube in the socket. Immediately take the readings between the following posts on a 0-250 v. high-resistance D.C. voltmeter: 14 to 6, 14 to 15. Both readings should be off scale. (Note 14 is the negative post.) Using a 0-5 A.C. meter, check the filament voltages. 3 to 12, approx. 3.3 volts A.C.; 4 to 13 off scale. Shut off power by pulling the plug as soon as the readings are taken; because this test subjects the condensers to very high voltages. If the power unit fails to deliver the rated voltages the entire unit should be exchanged.

When checking the receiver chassis, make sure cable is properly connected; then turn receiver switch "on." Contact to socket terminals is easily obtained as the heads of the spring-holding eyelets are above-panel.

Special note: operating voltage of screen-grid to frame should not rise above 70 volts. A defective screen-grid tube can be easily identified by the fact that its low emission causes the screen-grid potential to frame to rise above 70 volts.

The troubles that are found from the sequence test must be located with the aid of the schematic circuit. Remove the cable from the power unit, and follow through any faulty circuits with the aid of a high-resistance voltmeter (50-volt connection) and a 22½-volt battery in series. Shorts in the plate circuits will show up as readings on the voltmeter when one lead is touched to frame and one to the plate.` If opens are indicated by previous voltage readings, the circuit must be traced and each piece checked until fault is located. If VC rotors and stators rub, set will operate on low wavelengths when plates come out of mesh. High hum level usually due to defective '27, V3 or V4. Hum control is located in power unit and between fuse slips. Keep the two cables to "On-Off" switch far from V3.

In the K41 type, high hum in isolated cases may be due to loose step-down transformer laminations in dynamic reproducer assembly; tap laminations lightly with hammer to reset them and reduce hum level.

In rare instances, high hum may be occasioned by high-frequency radiations originating in the dry rectifier in the reproducer power assembly. To check this, disconnect the reproducer leads and attach a separate reproducer. If hum is heard through the latter disconnect A.C. leads to the dynamic reproducer at the power unit. If hum disappears it may be assumed that the rectifier is defective and should be replaced. Looking at chassis from front, VC3 is at left. Use middle VC as pilot when reganging, though rarely necessary. Turn volume control "Full On" and loosen two locking screws on left-hand VC, reaching through the slot left in the VC shield. Turn eccentric back and forth until weak signal is loudest and tighten. VC1 has panel vernier and need not be touched.

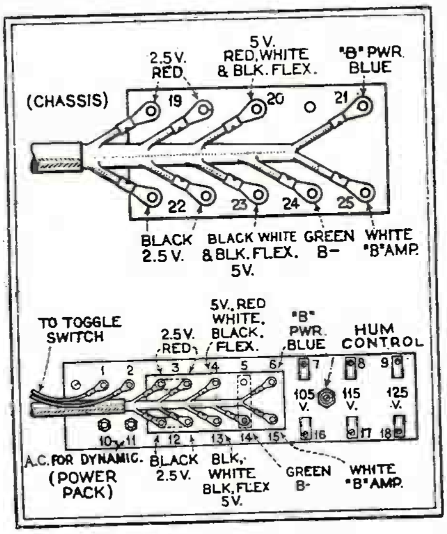

If changing tubes, and all other efforts, does not stop circuit oscillation, tune in station near 210 meters and, with a non-metallic screwdriver adjust NC1, NC2 and NC3. NC2 (upper left-hand) adjustment not critical. Re-check on 360 meters and seal. Under load, rectifier transformer secondary (dynamic reproducer) should read close to 11 volts; rectifier output should be 5.5 to 6 volts.

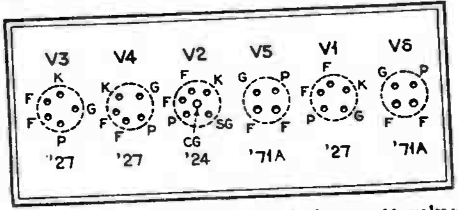

Continuity Test

Terminals	*Correct*	*Cause if Wrong*
24-frame	full	Open in cable
V3F-22 or 19	full	Do.
V3P-25	17.5	Do., T1 pri. or R8
V3G-fr.	0.5	Open or shorted R7
V3K-fr.	full	Open Gnd. lead
V4F-22 or 19	full	Open in cable
V4P-25	full	Do., or T2 pri.
V4G-fr.	20	Open in T1 sec.
V4K-fr.	full	Open R9
V2F-22 or 19	full	Open in cable
V2P-25	20	Do., R5, or T6 pri.
V2CG-fr.	full	Open in sec. of T5
V2SG-25	13	Open R4
V2K-fr.	full	Open R3
V5F-23 or 20	full	Open in cable
V5P-21	full	Do., or T3 pri.
V5G-fr.	21	Open T2 sec.
V1F-22 or 19	full	Open in cable
V1P-25	20	Do., R2, or T5 pri.
V1G-fr.	full	Open T4
V1K-fr.	full	Open R1
V6F-23 or 20	full	Open in cable
V6P-21	full	Do. or T3 pri.
V6G-frame	21	Open T2 sec.
Any rotor-fr.	full	Open fr. lead
VC1 stator-fr.	full	Open T4 or T4 leads
VC2 stator-fr.	full	Open T5 sec. or leads
VC3 stator-fr.	full	Open T6 sec. or leads
Ant. post-fr.	no r'd'g.	Shorted C13
L.S.-L.S.	full	Open T3 sec. or leads
V8F-23 or 20	full	Open in cable
Any Plate prong-fr.	no r'd'g.	Sh't'd bypass or pl. lead
V1F or V2F-fr.	Do.	Sh't'd bypass or fil. lead
V3F-fr.	Do.	Shorted heater lead
V4F-fr.	Do.	Shorted fil. lead
V5F or V6F-fr.*	full	Open R10 or R11*

*(Tubes and dial lamp out of sockets.)

Transformer Tests

T1 P1-P2	full	Open pri.
T1 S1-S2	full	Open sec.
T2 P1-P2	full	Open pri.
T2 S1-S2	full	Open sec.
T3 P1-P2	full	Open pri.
T3 S1-S2	full	Open sec.

Operating Voltages of Set

(Turn volume control to off position.)

V3F-F, 2.5 A.C.; V3P-fr., 65.0 D.C.; V3G-K, below 1 D.C.; V4F-F, 2.5 A.C.; V4P-fr., 135.0 D.C.; V4G-K, 7.5 D.C., V2F-F, 2.5 A.C.; V2P-fr., 110.0 D.C.; V2CG-K, 1.5 D.C.; V2SG-fr., 60.0 D.C.; V5F and V6F-F, 5.0 A.C.; V5P and V6P-fr., 205.0 D.C.; V5 and V6G-F, 40.0 D.C.; V1F-F, 2.5 A.C.; V1P-fr., 120.0 D.C.; V1G-K, 7.5 D.C.

Values of Parts

Receiver: C1 to C9, inclusive, 0.25-mf.; C10, C12, .0002; C11, .001; C13, .0001; R1, R9, R10, 1,500 ohms; R2, 6,000; R3, 300; R4, 40,000; R5, 6,000; R6, 700,000; R7, 2-meg.; R8, 13,000 ohms; R11, R12, 40 ohms.

Power unit: R, 1,300 ohms; L1, 15-henry, 285-ohm; L2, 60-henry, 1,570-ohm; C16, C17, 1-mf. C18, 2 mf.; C19, 0.1-mf.

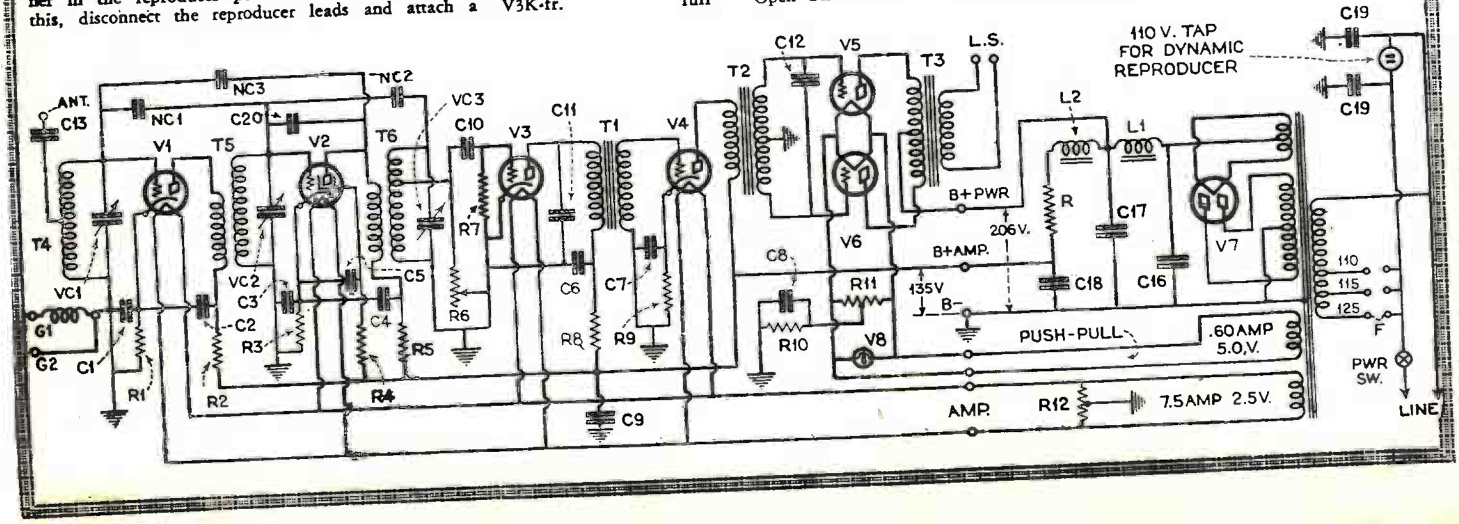

FEDERAL RADIO CORP.

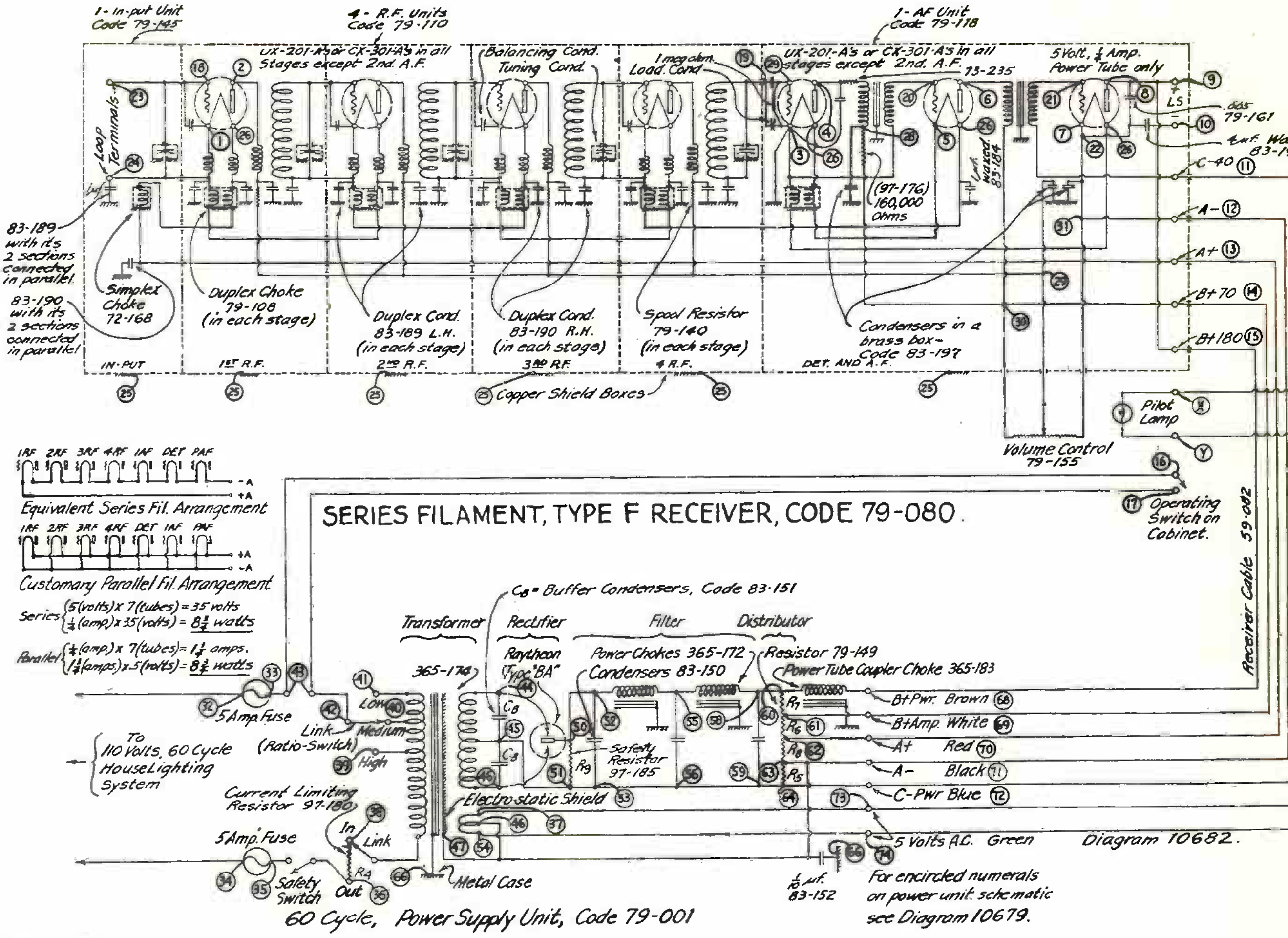

FEDERAL ORTHO-SONIC TYPE-H

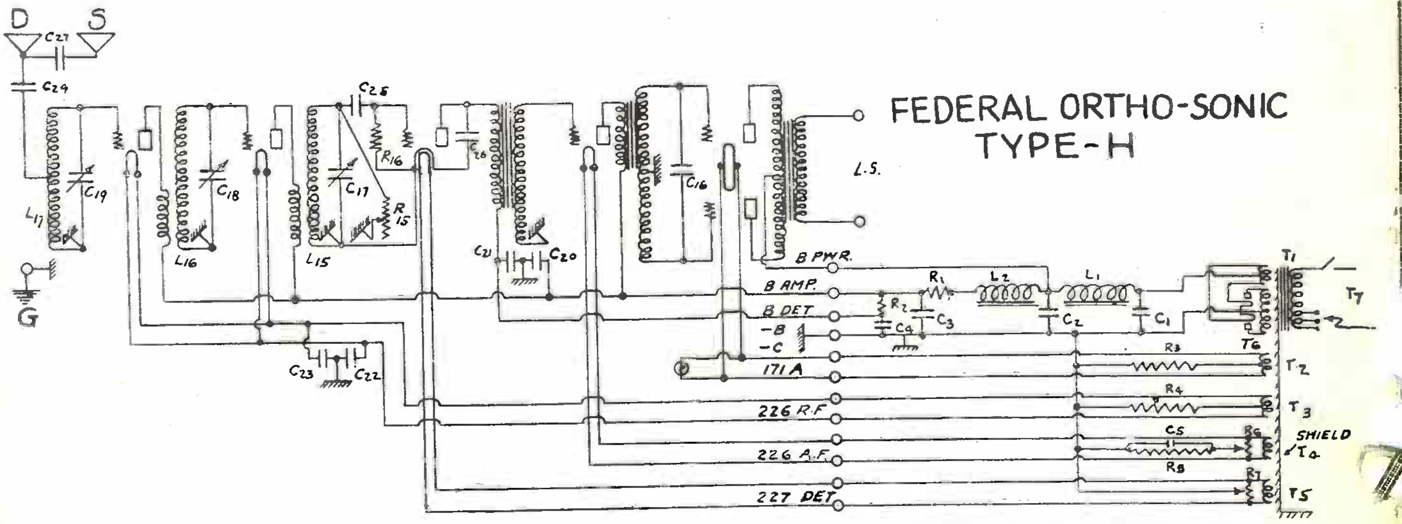

PARTS LIST FOR REC.

C16 = .0002 µf
C17 = .0003 µf
C18 = .0003 µf
C19 = .0003 µf
C20 = ½ µf
C21 = ½ µf
C22 = 1/10 µf
C23 = 1/10 µf
C24 = .0001 µf
C25 = .0002 µf
C26 = .001 µf
C27 = 50/35 µµf.

L15 = 262 µh
L16 = 262 µh
L17 = 262 µh

R15 = 500,000 Ω
R16 = 2 Meg

PARTS LIST FOR POWER UNIT

C1 = 1 µf
C2 = 4 µf
C3 = 2 µf
C4 = 1 µf
C5 = ½ µf

R1 = 3500 Ω
R2 = 13,000 Ω
R3 = 1300 Ω
R4 = 1400 Ω
R5 = 2500 Ω
R6 = 40 Ω
R7 = 40 Ω

L1 = 15h - 285 Ω
L2 = 55h - 1600 Ω

T1 = 24
T2 = 24
T3 = 8
T4 = 8
T5 = 12
T6 = 2390
T7 = 573

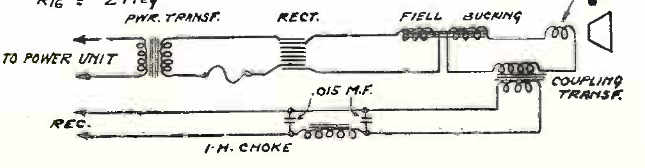

FEDERAL RADIO CORP.

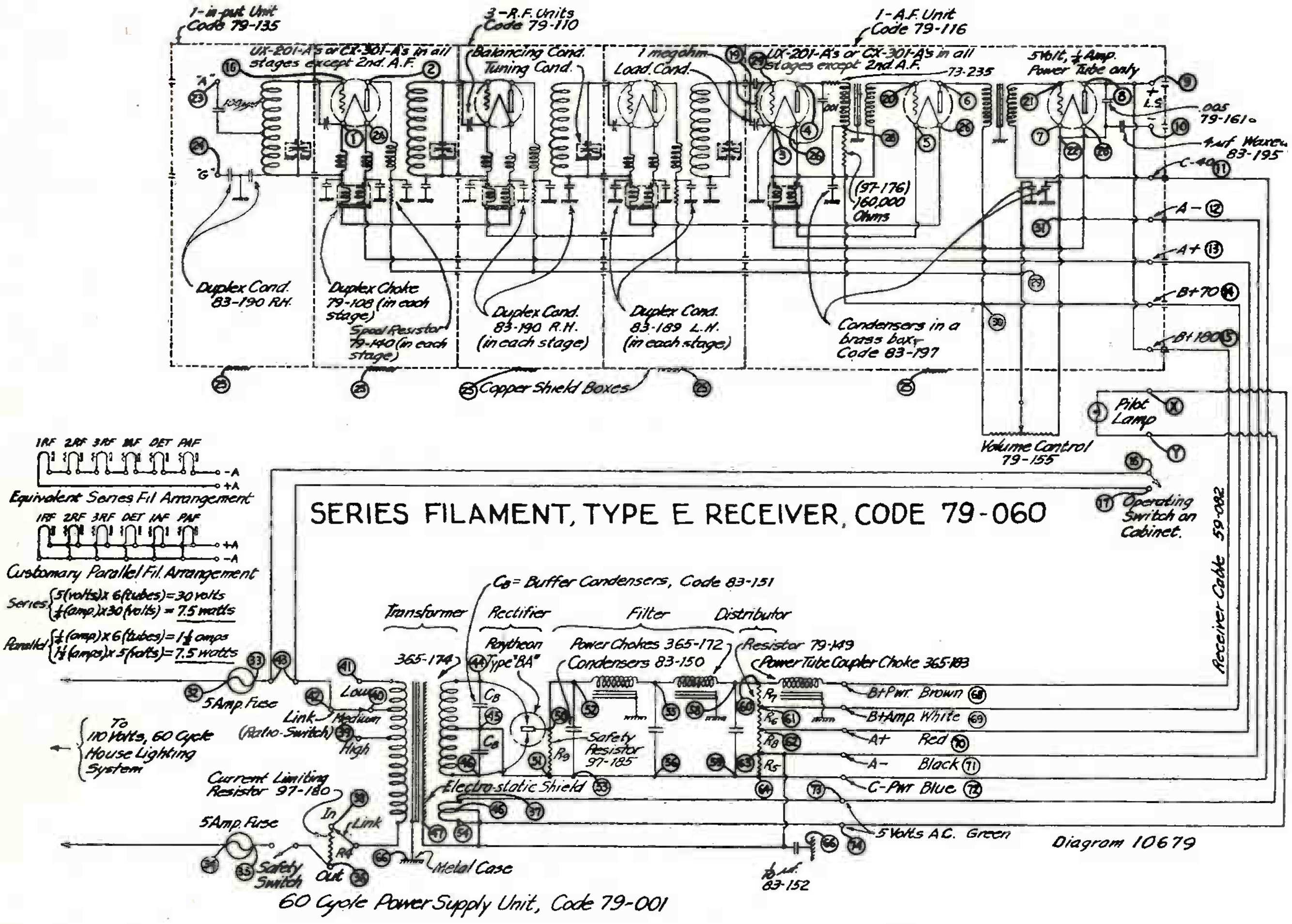

SERIES FILAMENT, TYPE E RECEIVER, CODE 79-060

60 Cycle Power Supply Unit, Code 79-001

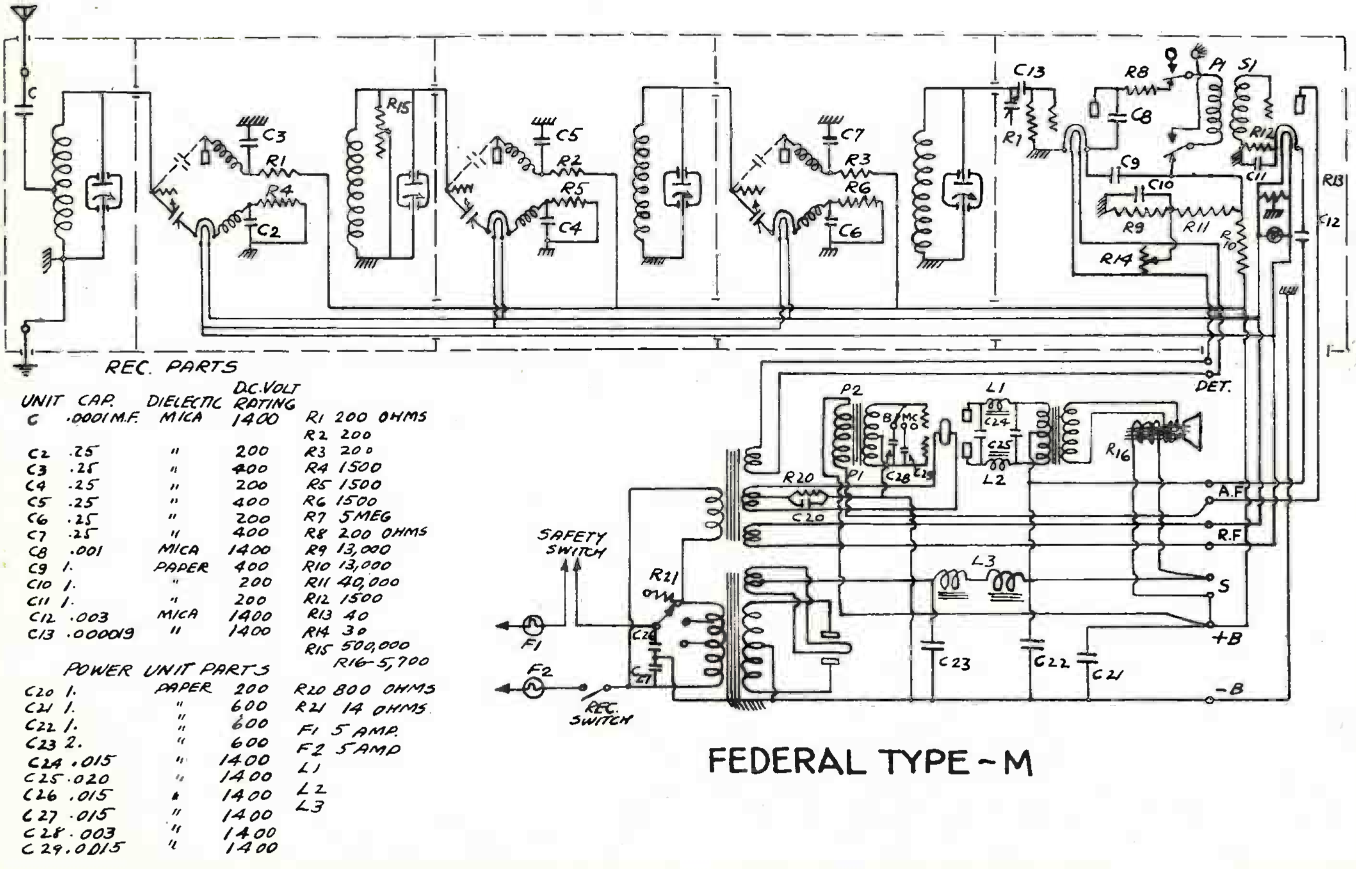

REC. PARTS

UNIT	CAP.	DIELECTIC	D.C. VOLT RATING	
C	.0001 M.F.	MICA	1400	R1 200 OHMS
				R2 200
C2	.25	"	200	R3 200
C3	.25	"	400	R4 1500
C4	.25	"	200	R5 1500
C5	.25	"	400	R6 1500
C6	.25	"	200	R7 5 MEG
C7	.25	"	400	R8 200 OHMS
C8	.001	MICA	1400	R9 13,000
C9	1.	PAPER	400	R10 13,000
C10	1.	"	200	R11 40,000
C11	1.	"	200	R12 1500
C12	.003	MICA	1400	R13 40
C13	.000019	"	1400	R14 30
				R15 500,000
				R16-5,700

POWER UNIT PARTS

C20	1.	PAPER	200	R20 800 OHMS
C21	1.	"	600	R21 14 OHMS
C22	1.	"	600	F1 5 AMP.
C23	2.	"	600	F2 5 AMP
C24	.015	"	1400	L1
C25	.020	"	1400	L2
C26	.015	"	1400	L3
C27	.015	"	1400	
C28	.003	"	1400	
C29	.0015	"	1400	

FEDERAL TYPE - M

FREED-EISEMANN RADIO CORP.

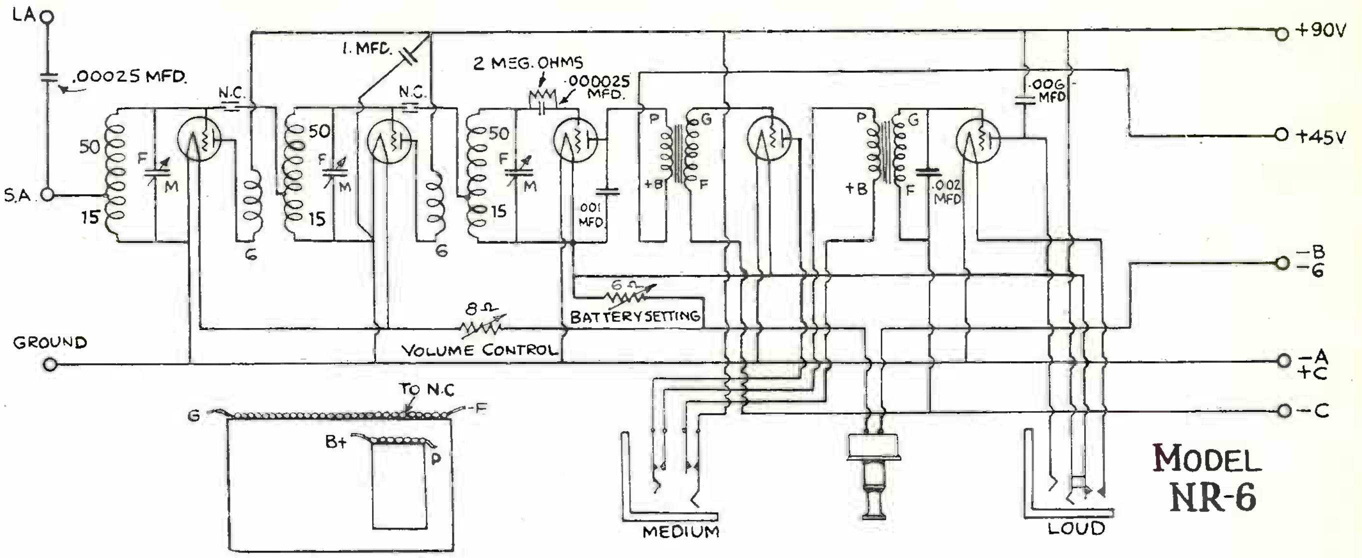

MODEL NR-6

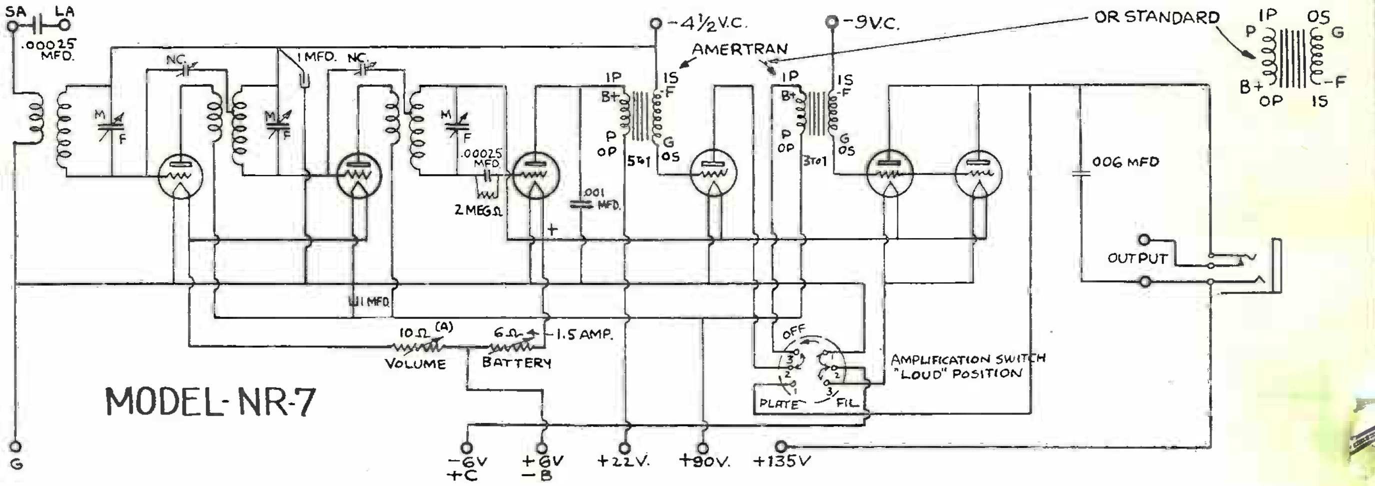

MODEL-NR-7

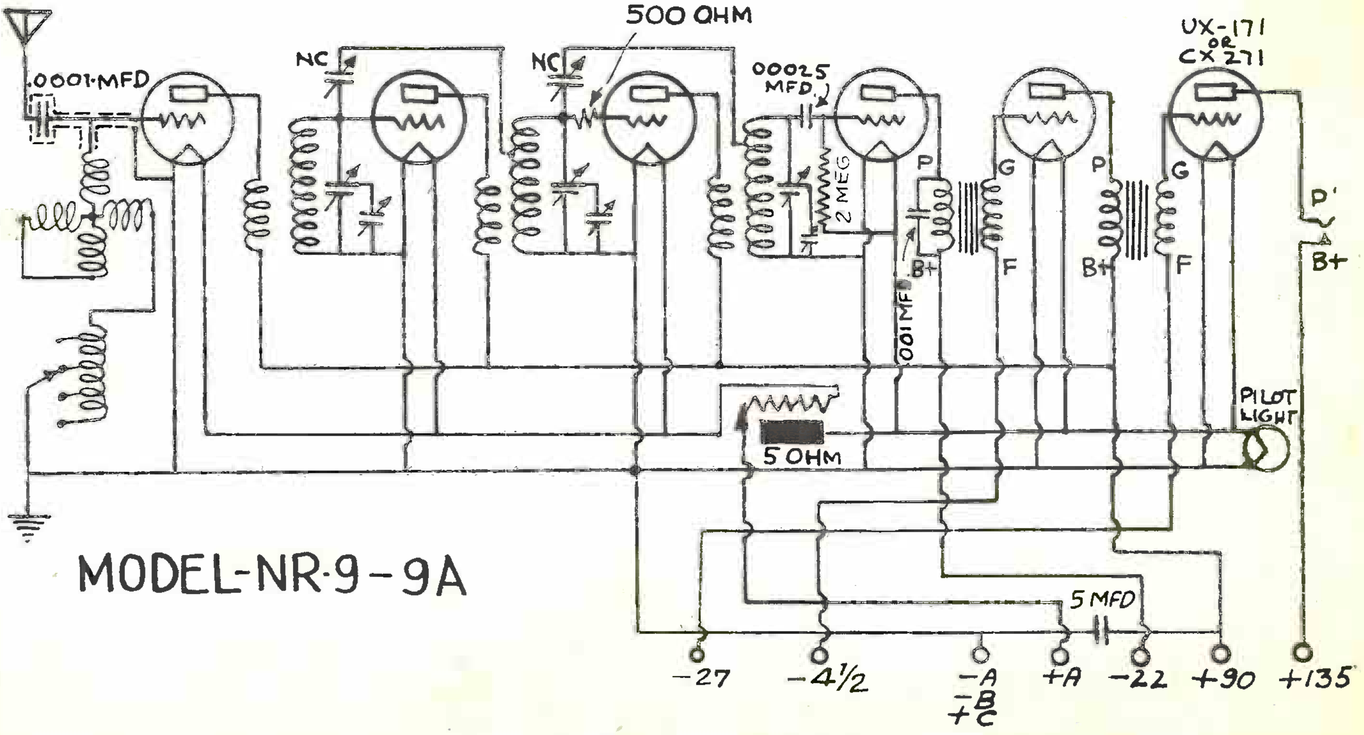

MODEL-NR-9-9A

FREED-EISEMANN RADIO CORP.

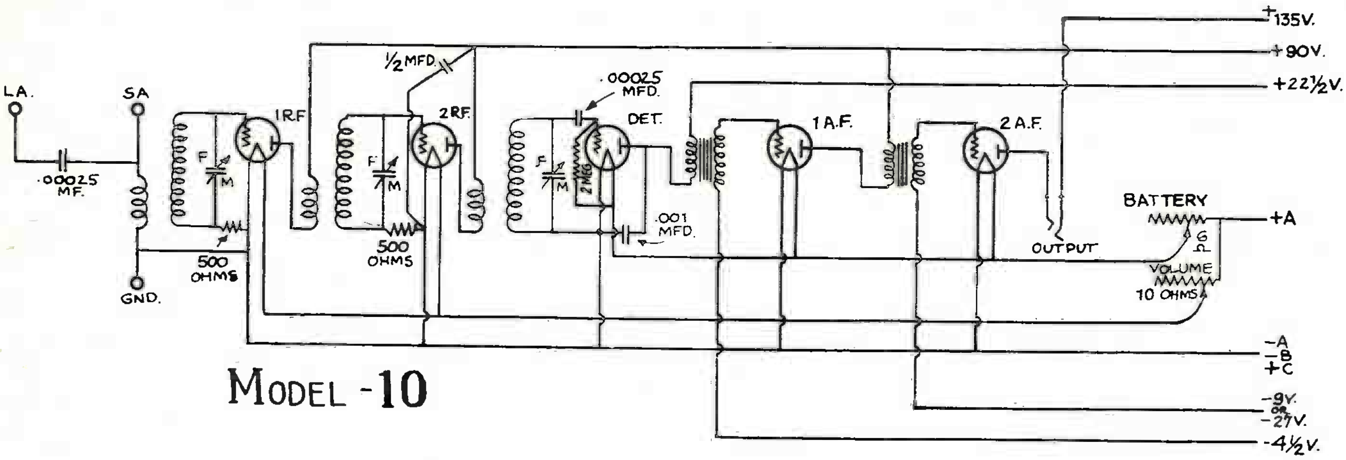

Model -10

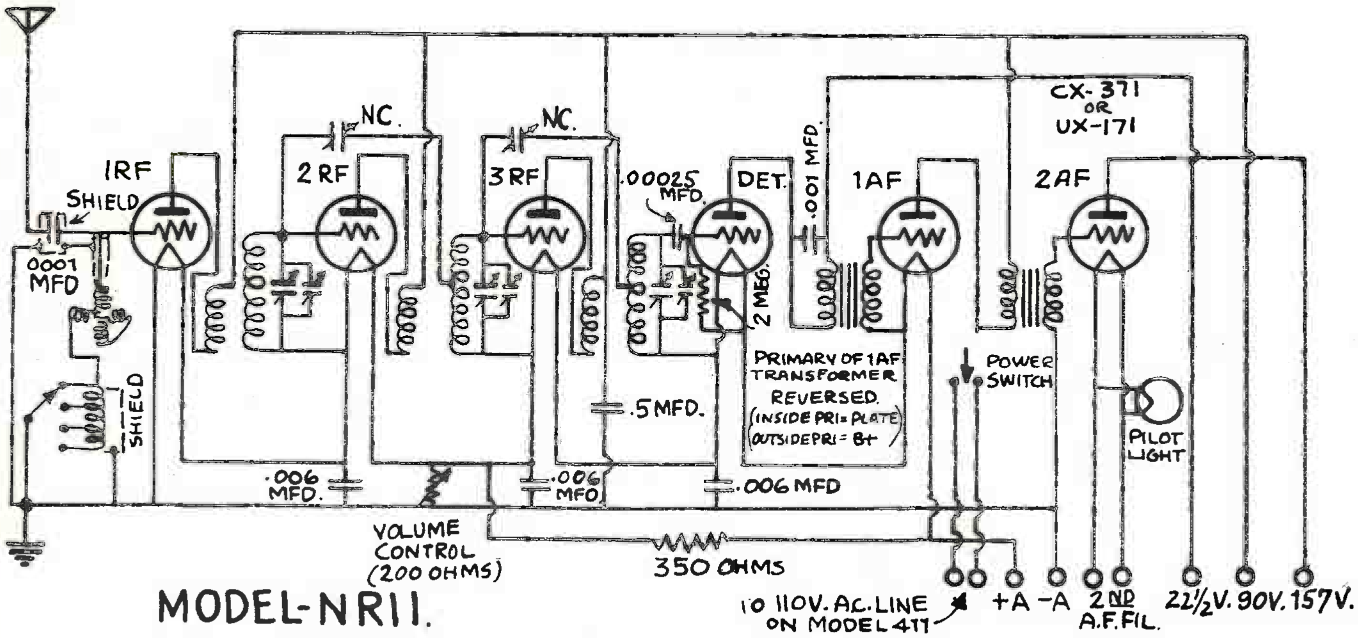

MODEL-NR11.

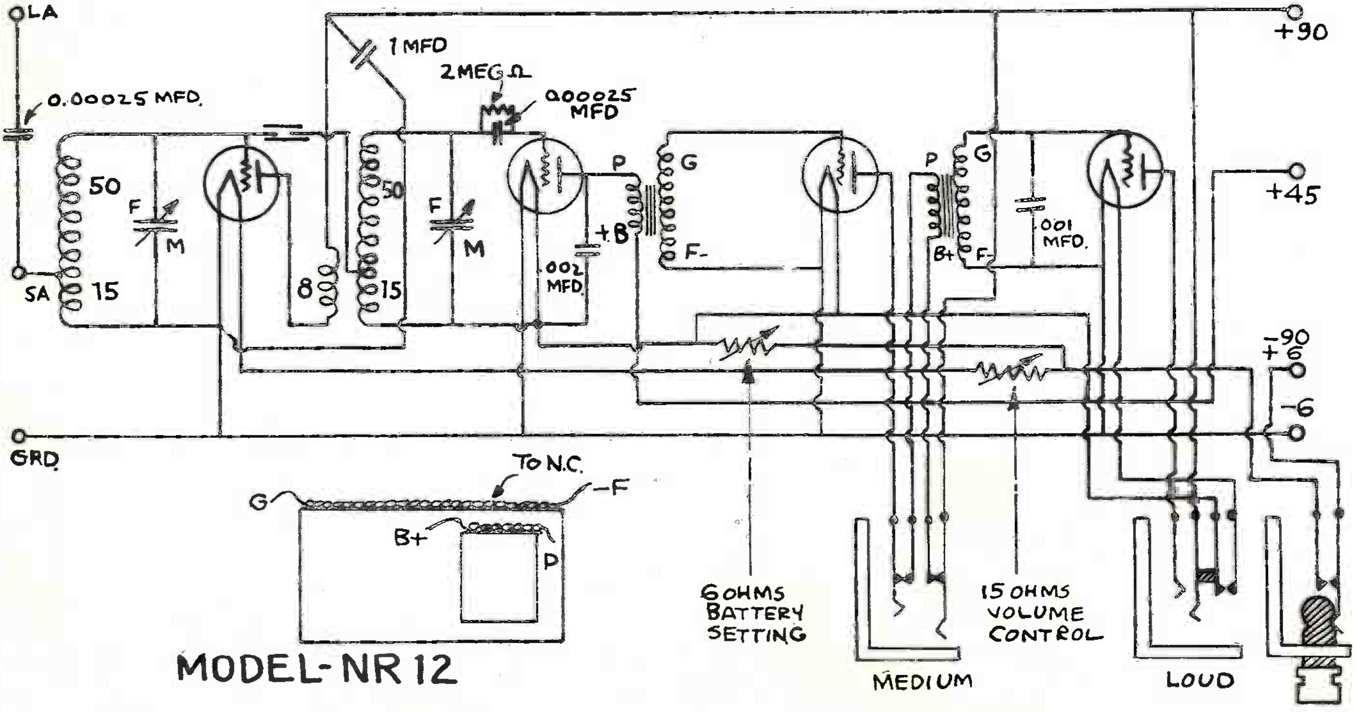

MODEL-NR12

FREED-EISEMANN RADIO CORP.

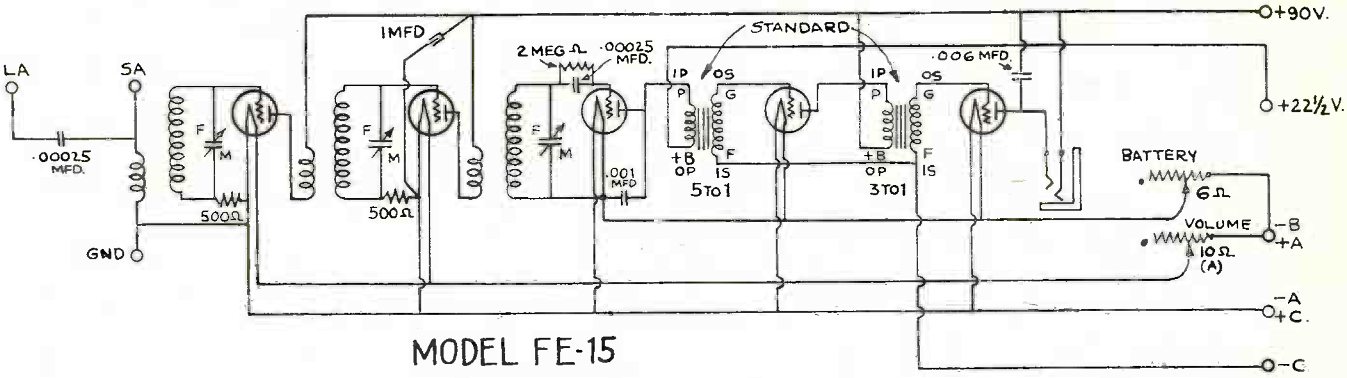

MODEL FE-15

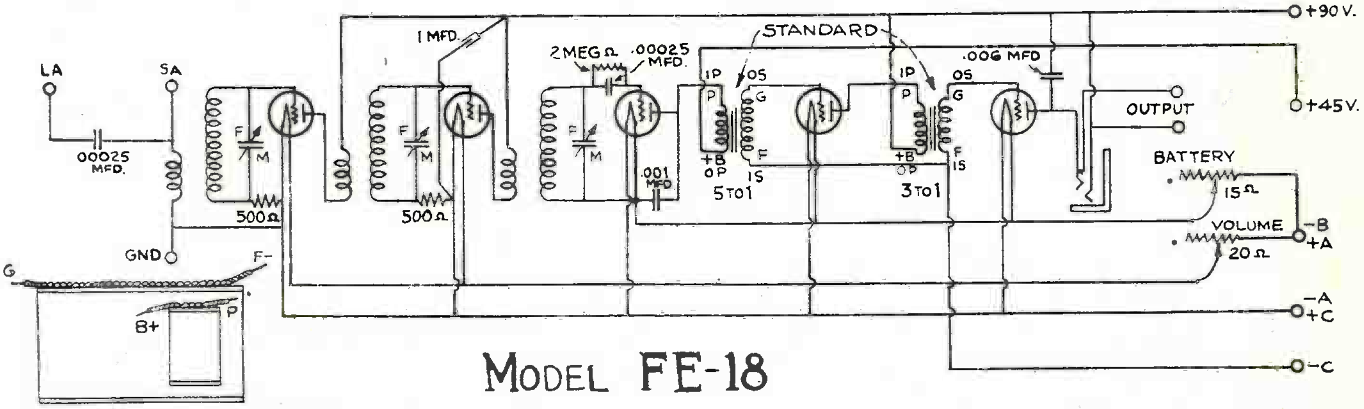

Model FE-18

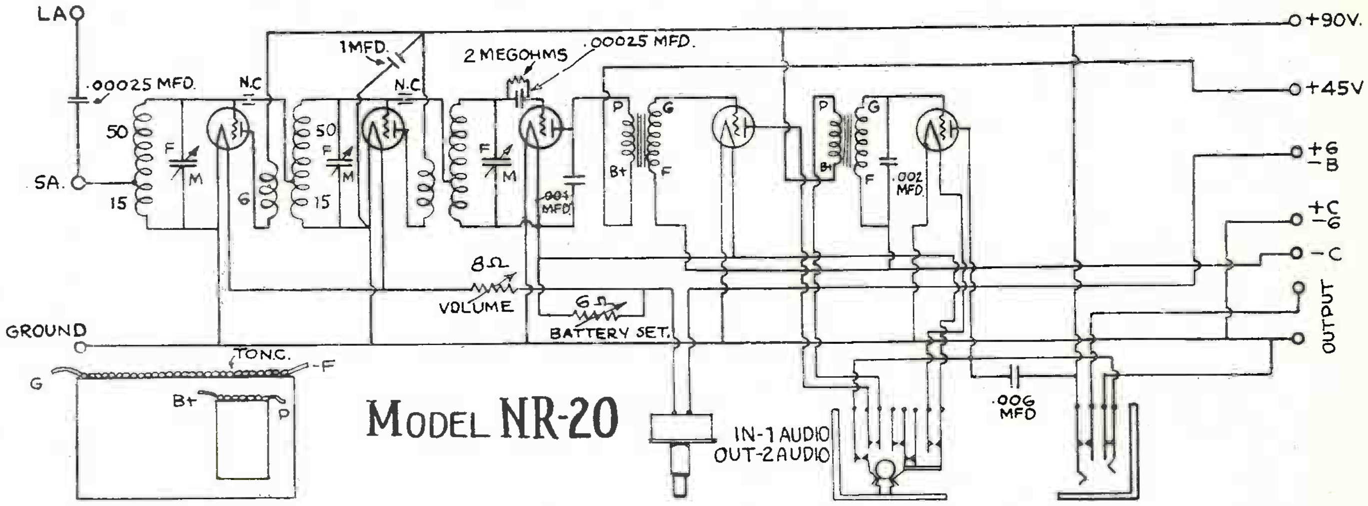

Model NR-20

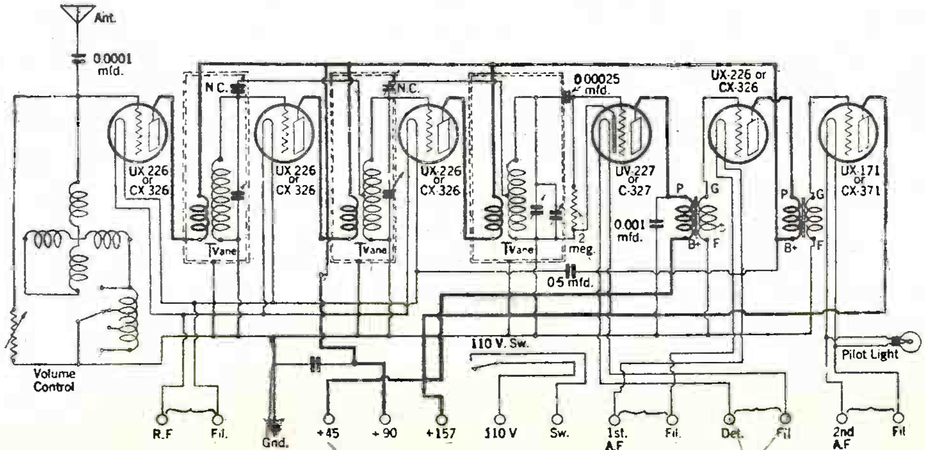

Circuit Diagram of the NR-60.

27

FREED-EISEMANN RADIO CORP.

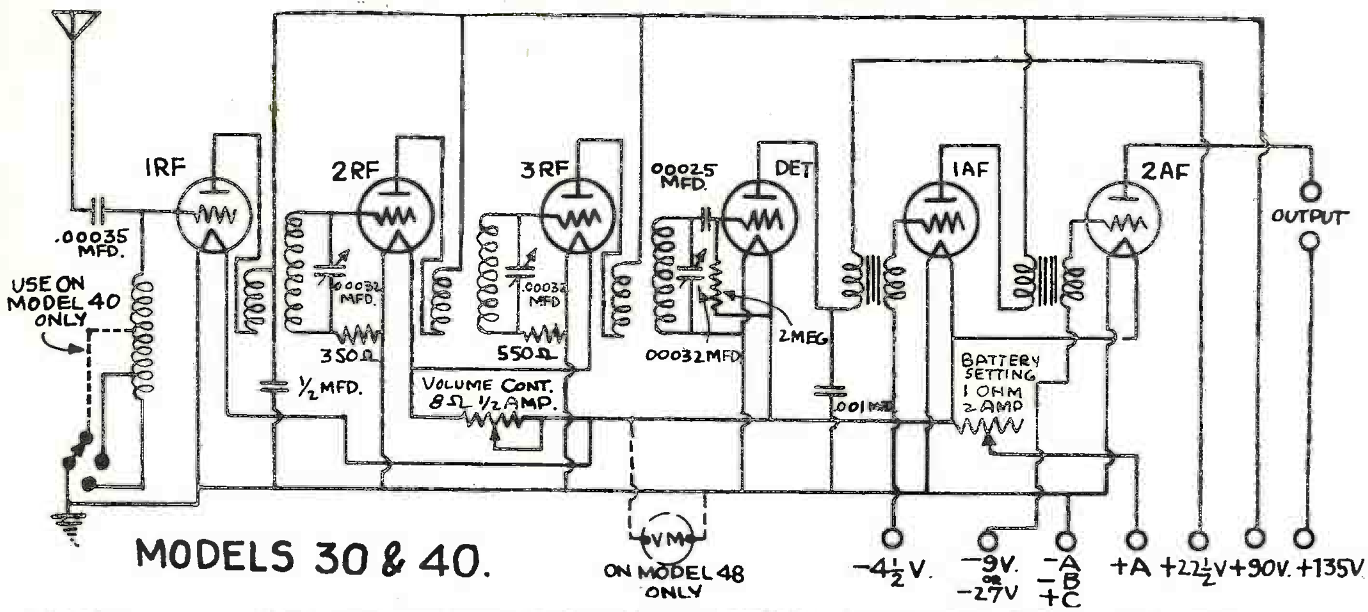

MODELS 30 & 40.

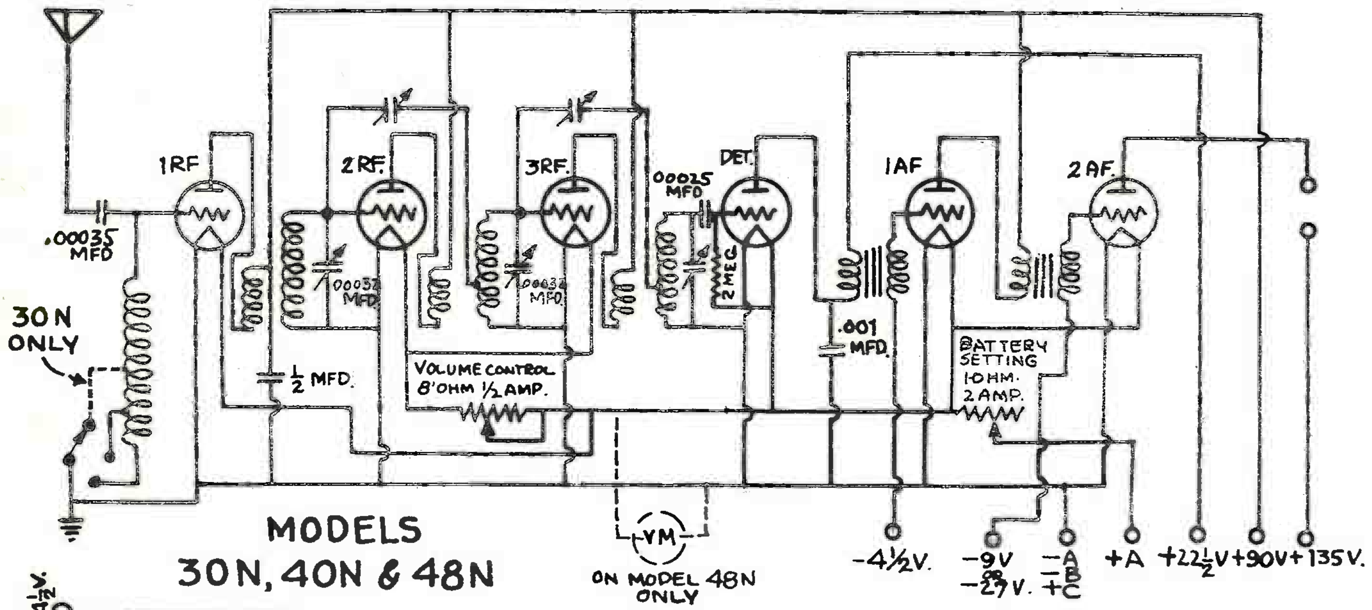

MODELS 30N, 40N & 48N

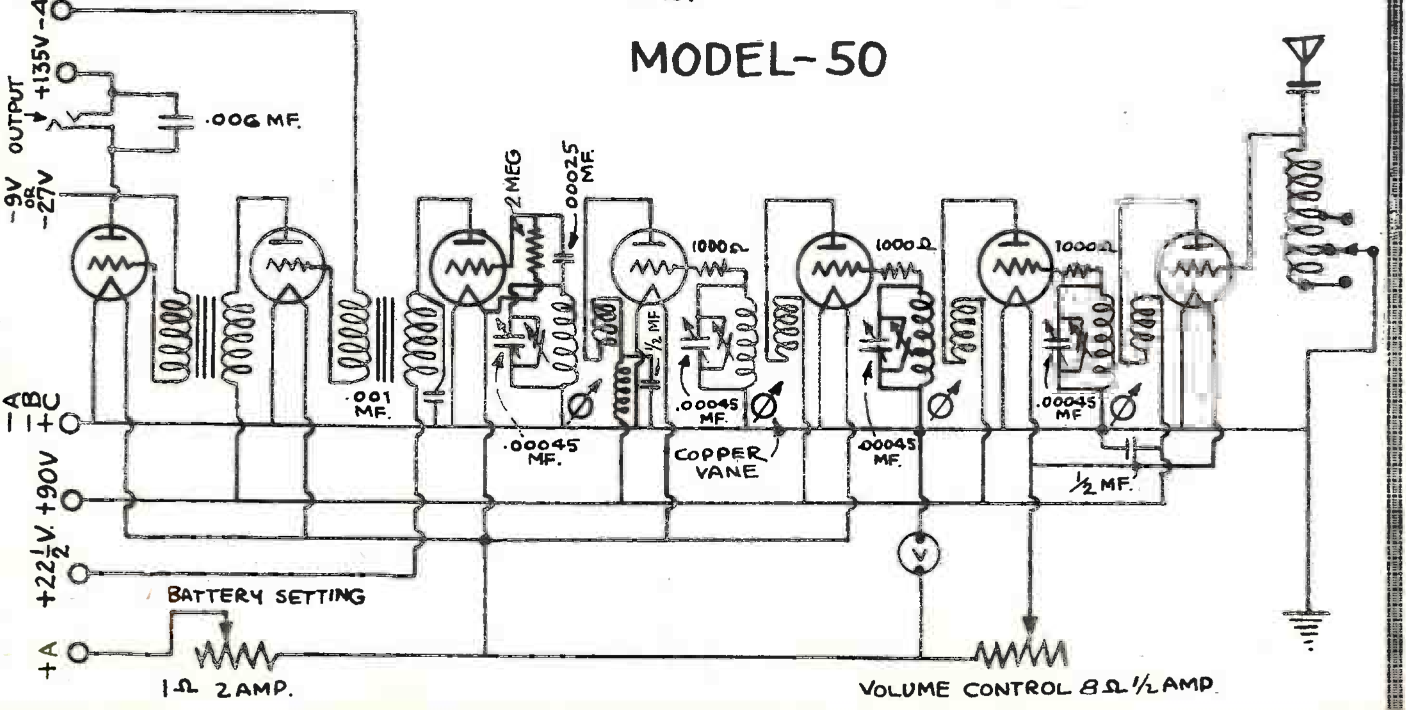

MODEL-50

FREED-EISEMANN RADIO CORP.

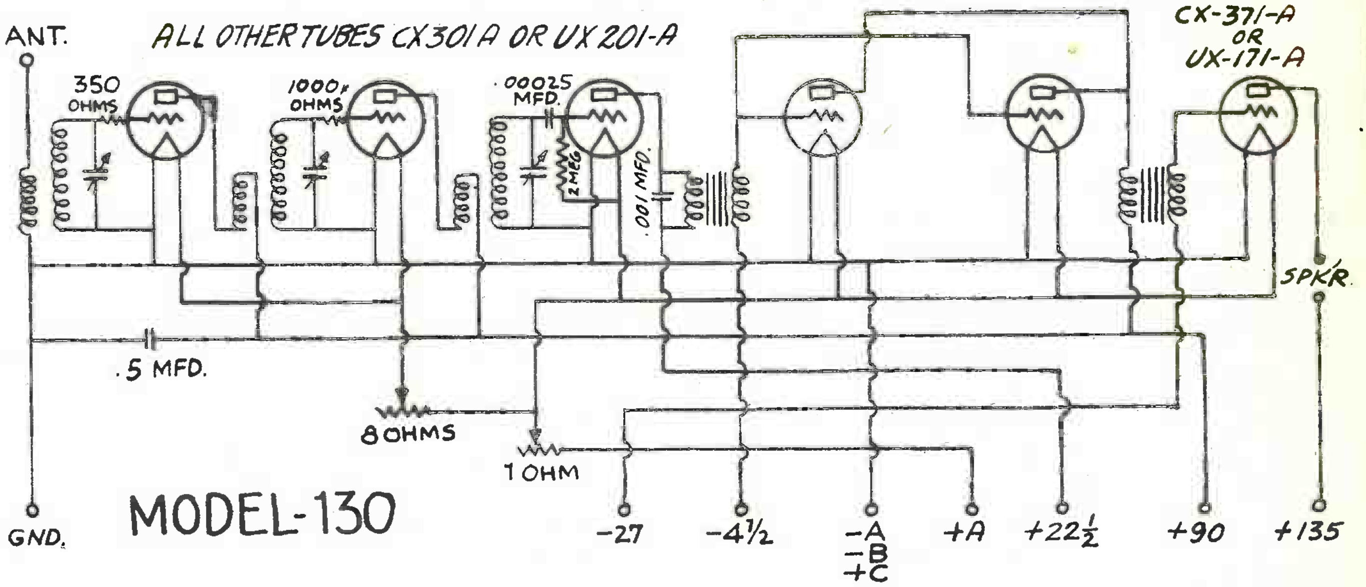

MODEL-130

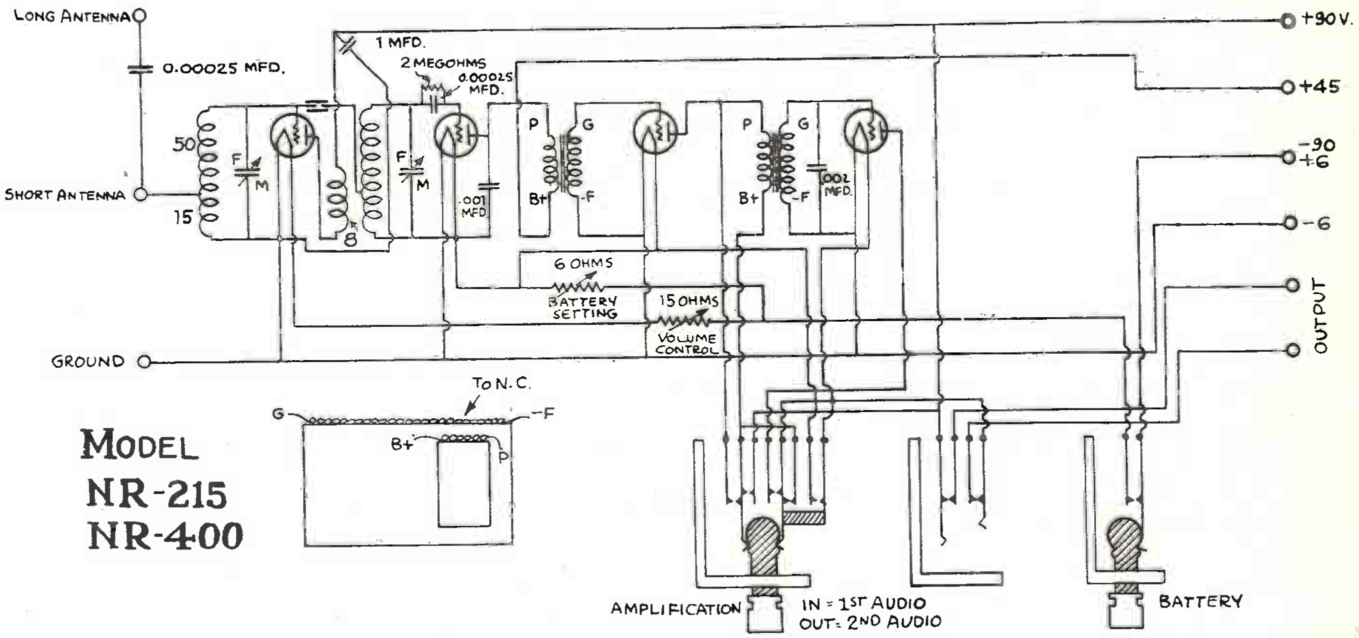

MODEL NR-215 NR-400

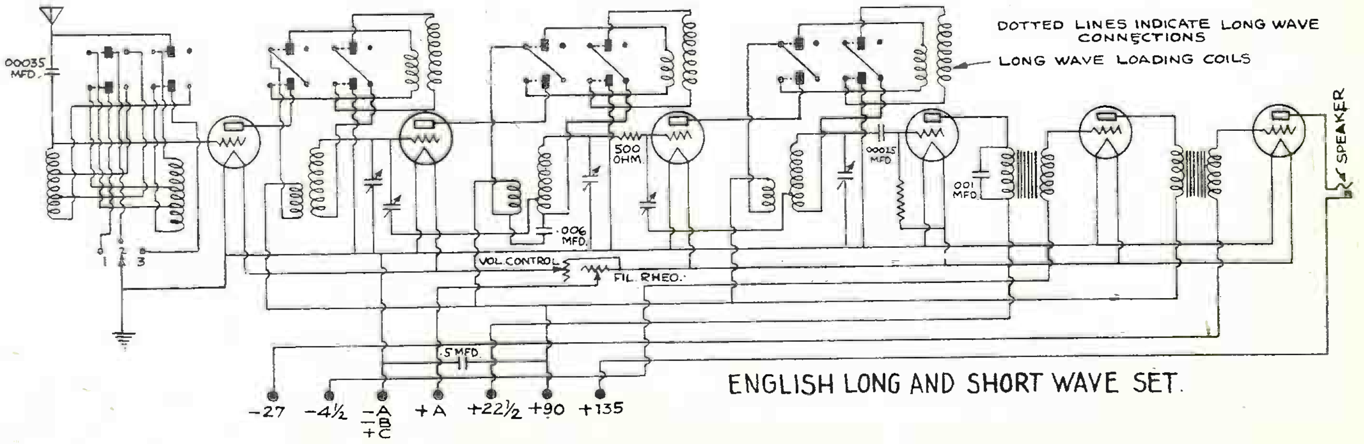

ENGLISH LONG AND SHORT WAVE SET.

FREED-EISEMANN RADIO CORP.

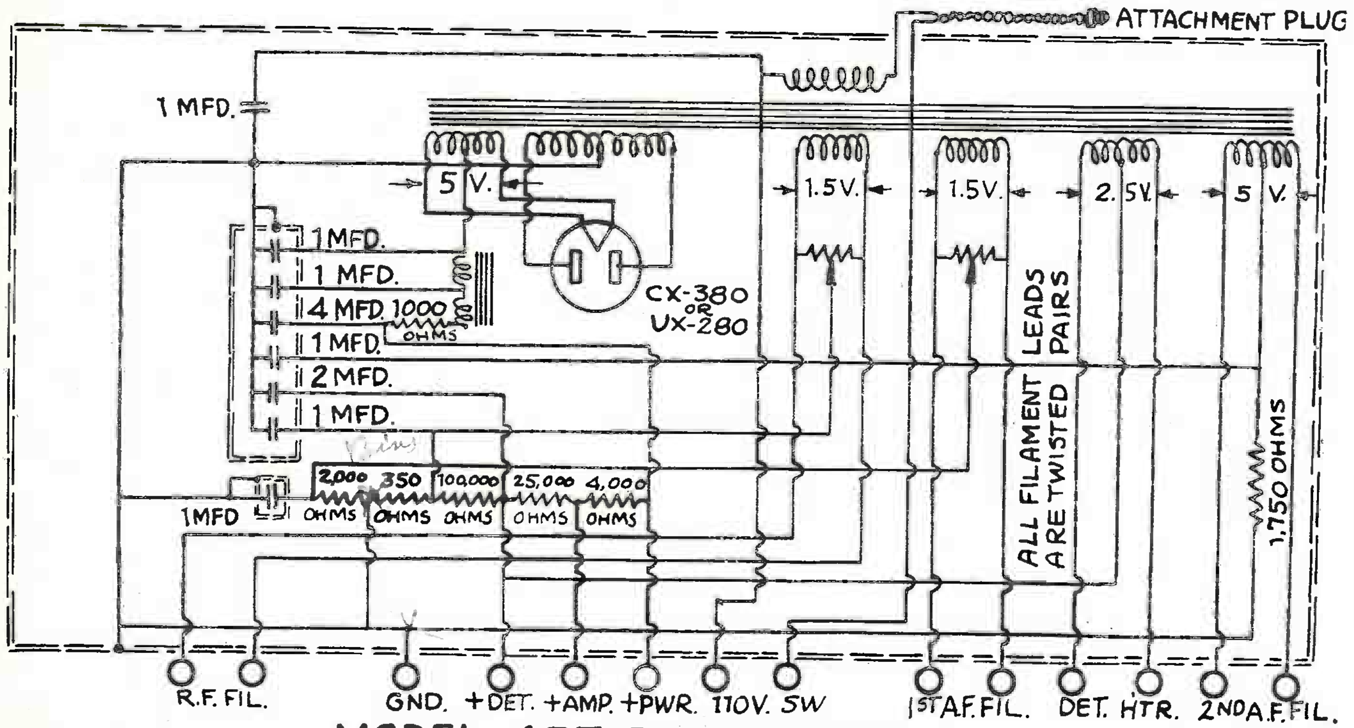

MODEL 457 POWER UNIT

MODEL NR-80 D.C.

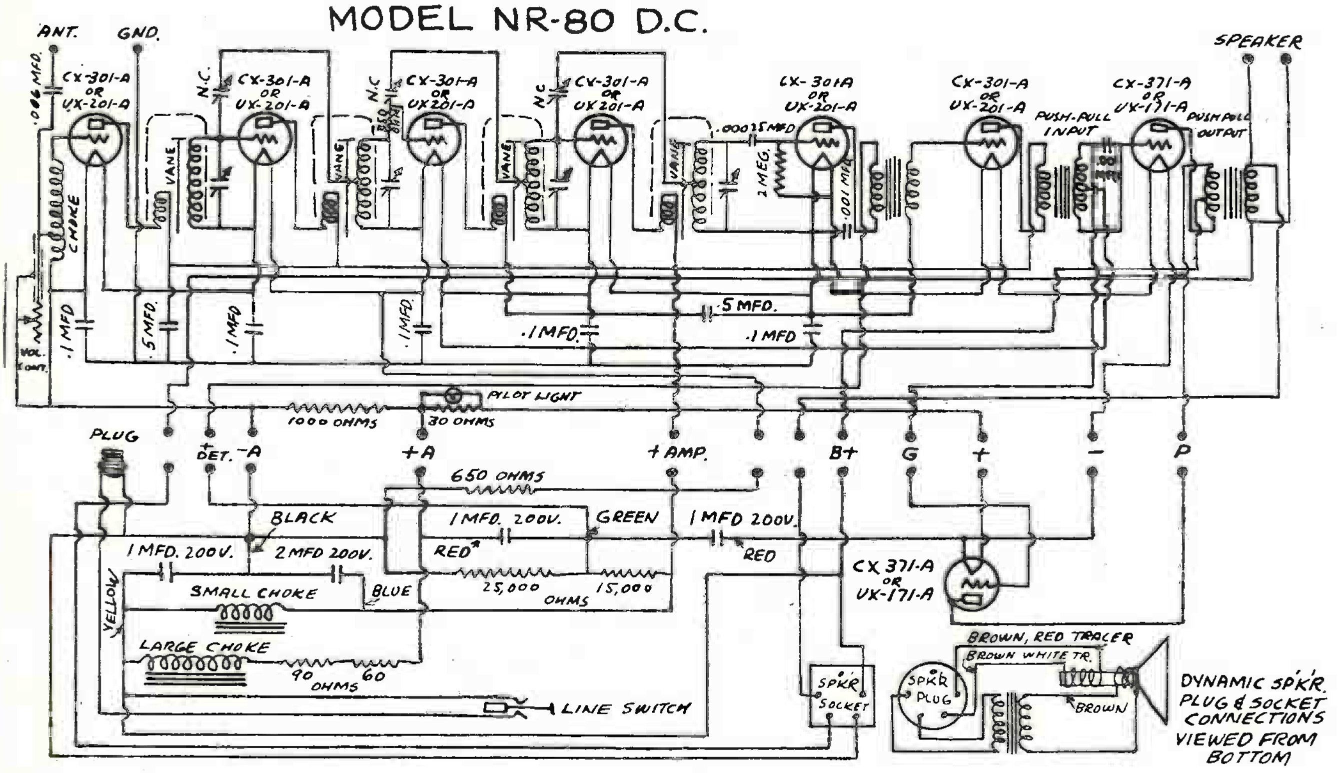

FREED-EISEMANN RADIO CORP.

MODEL 90 S, A.C.

TUBES REQUIRED
a = 127 TYPE
b = 145 "
c = 180 "
d = 124 "

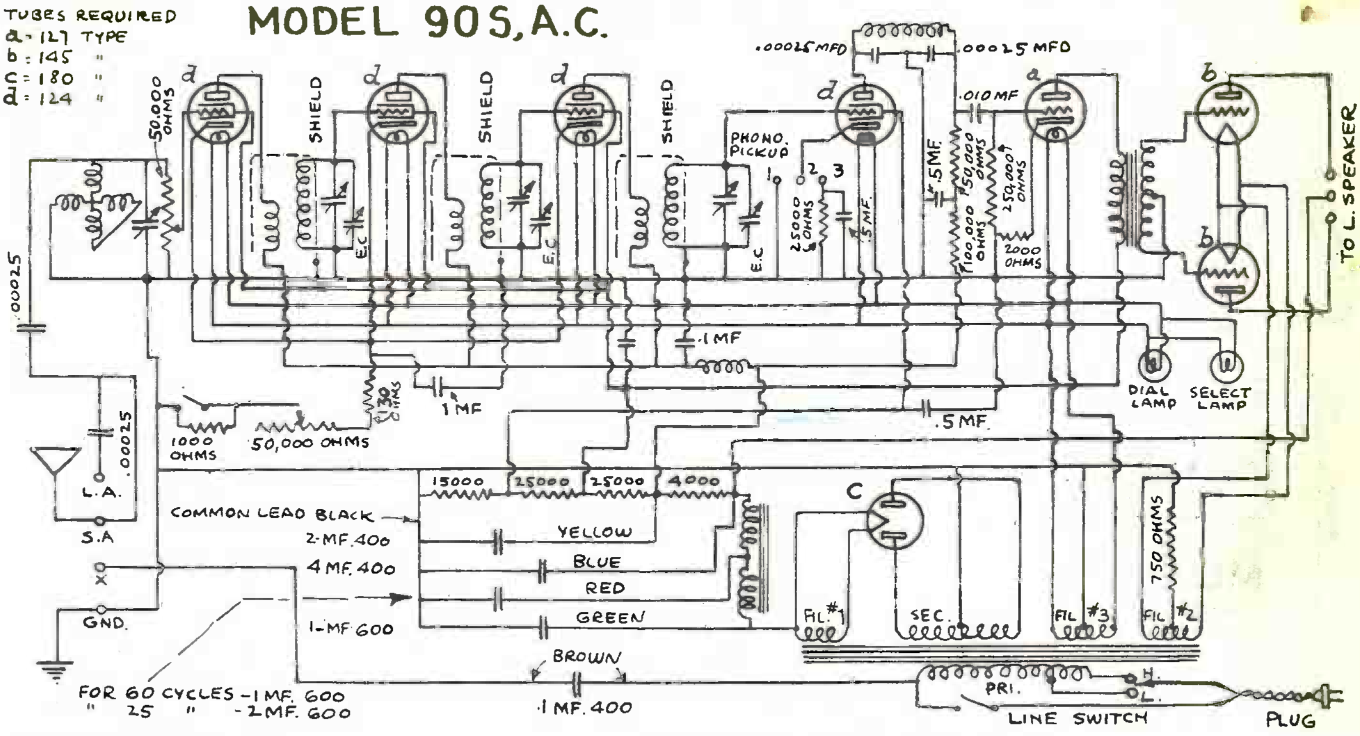

MODEL NR 95 A.C

a-ARCTURUS TYPE-127
b-ARCTURUS TYPE-145
C-ARCTURUS TYPE-180

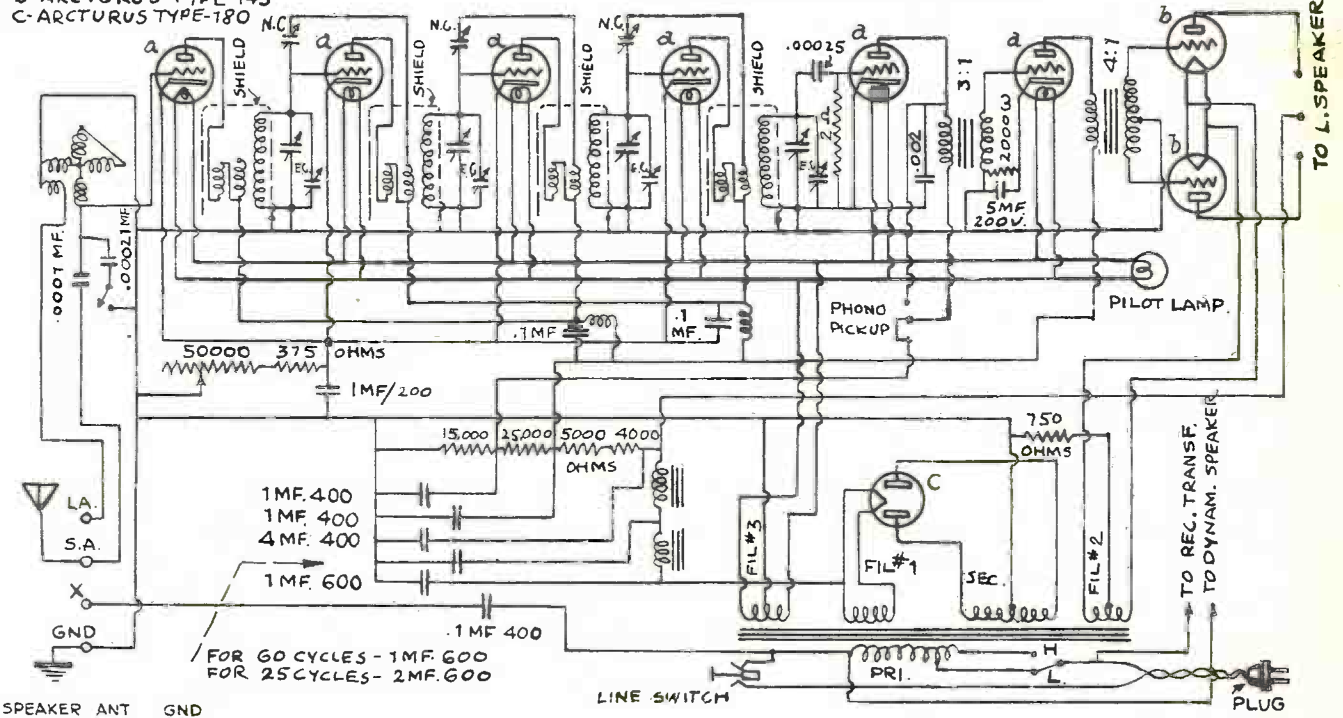

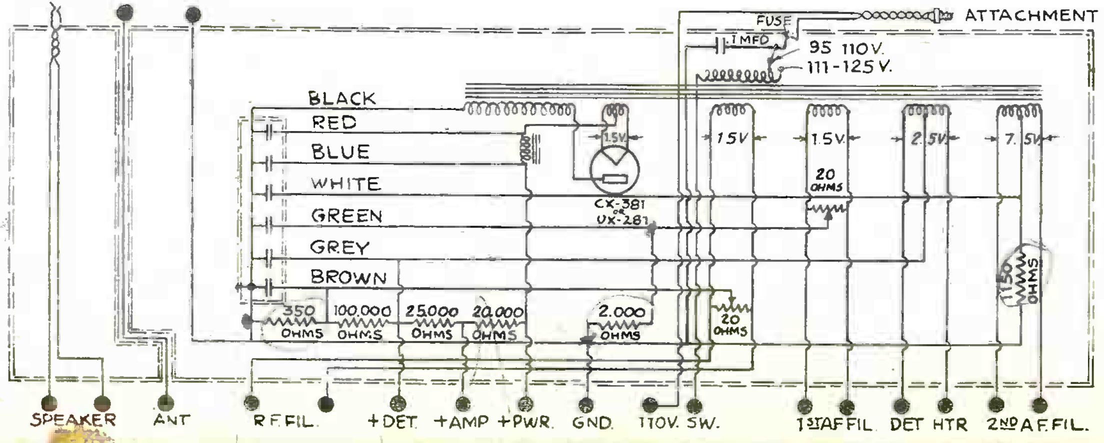

NOTE
2,000, 350 & 1,150 OHM RESISTANCES WOUND ON SAME TUBE.
20,000 OHM RESISTANCE COMPOSED OF 2-10,000 OHM RESISTANCES CONNECTED IN SERIES

MODEL 470

Black - Round

FREED-EISEMANN RADIO CORP.

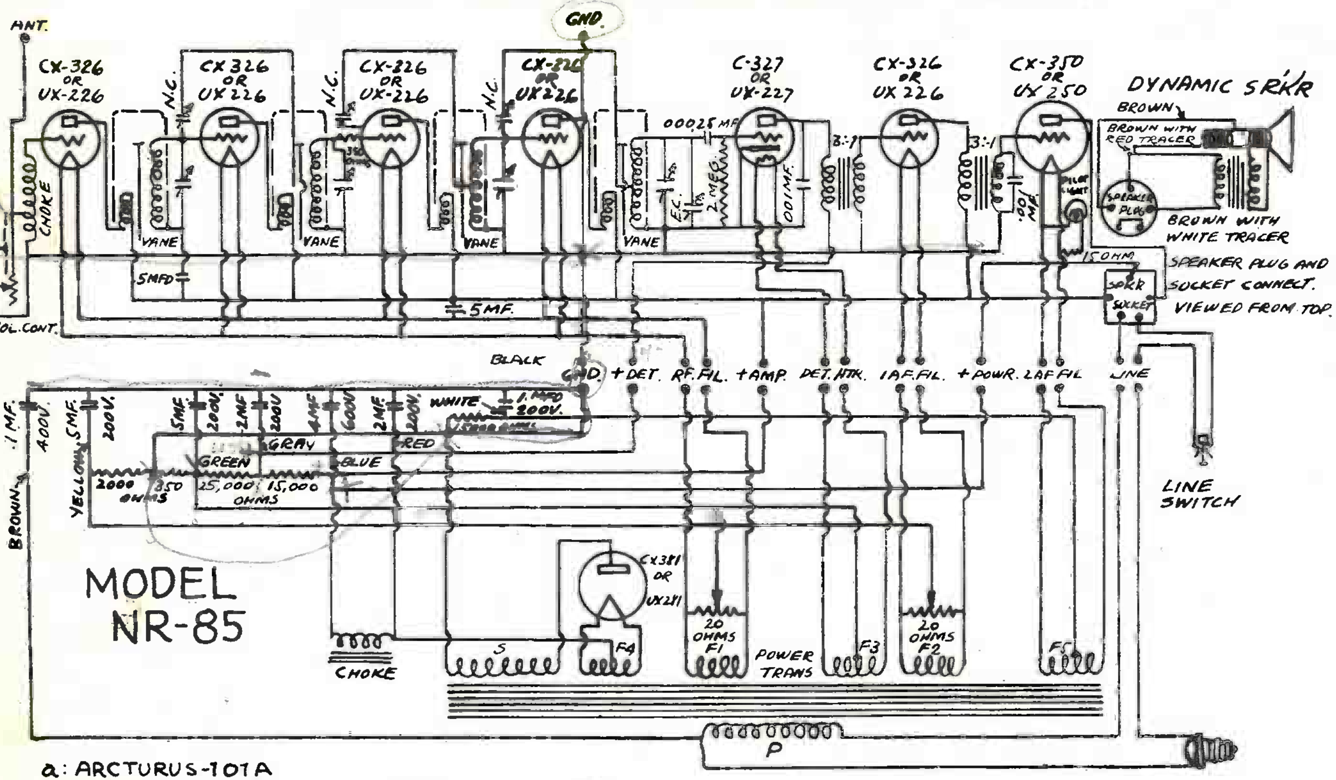

MODEL NR-85

a: ARCTURUS-101 A
b: ARCTURUS-071 A

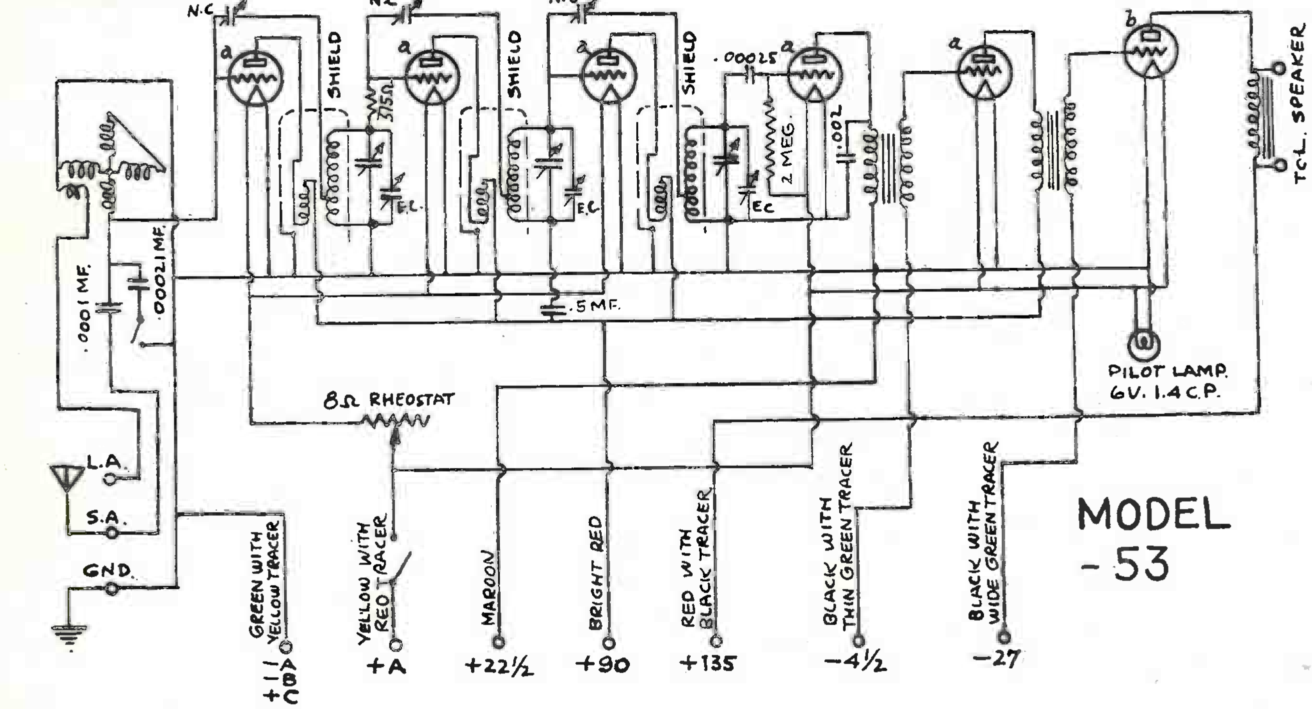

MODEL -53

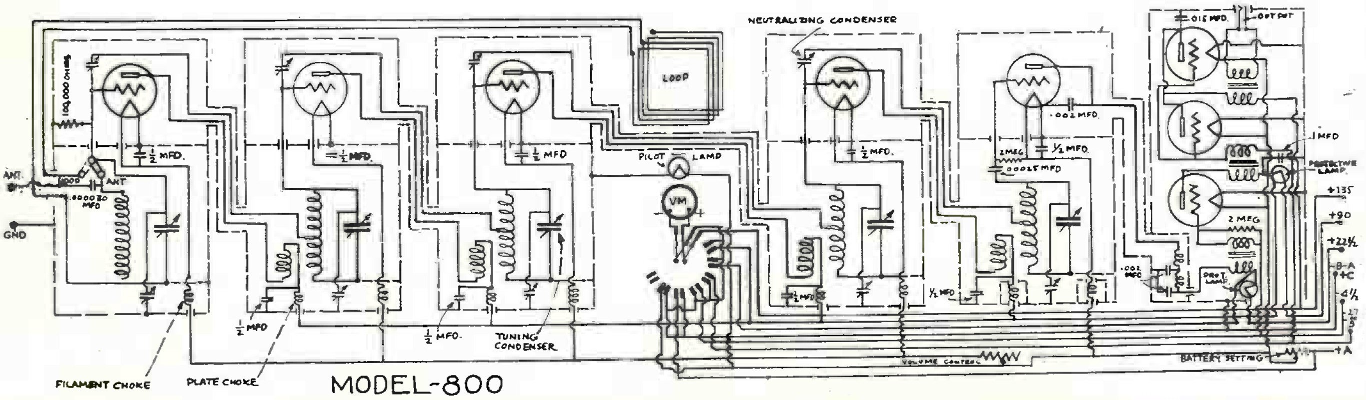

MODEL-800

CHAS. FRESHMAN CO., Inc.

EARL, MODELS-21 AND 22

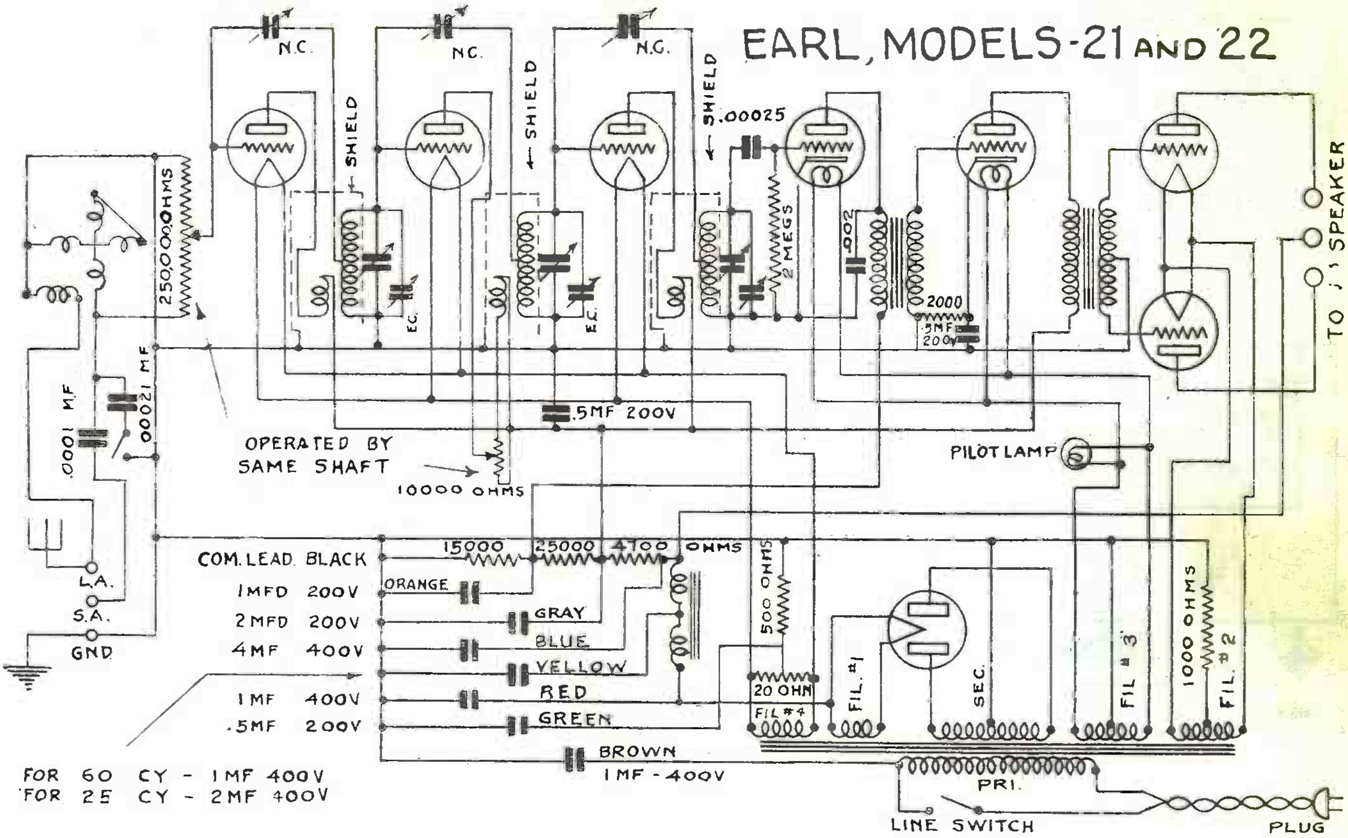

FOR 60 CY - 1MF 400V
FOR 25 CY - 2MF 400V

EARL, MODELS-31 AND 32

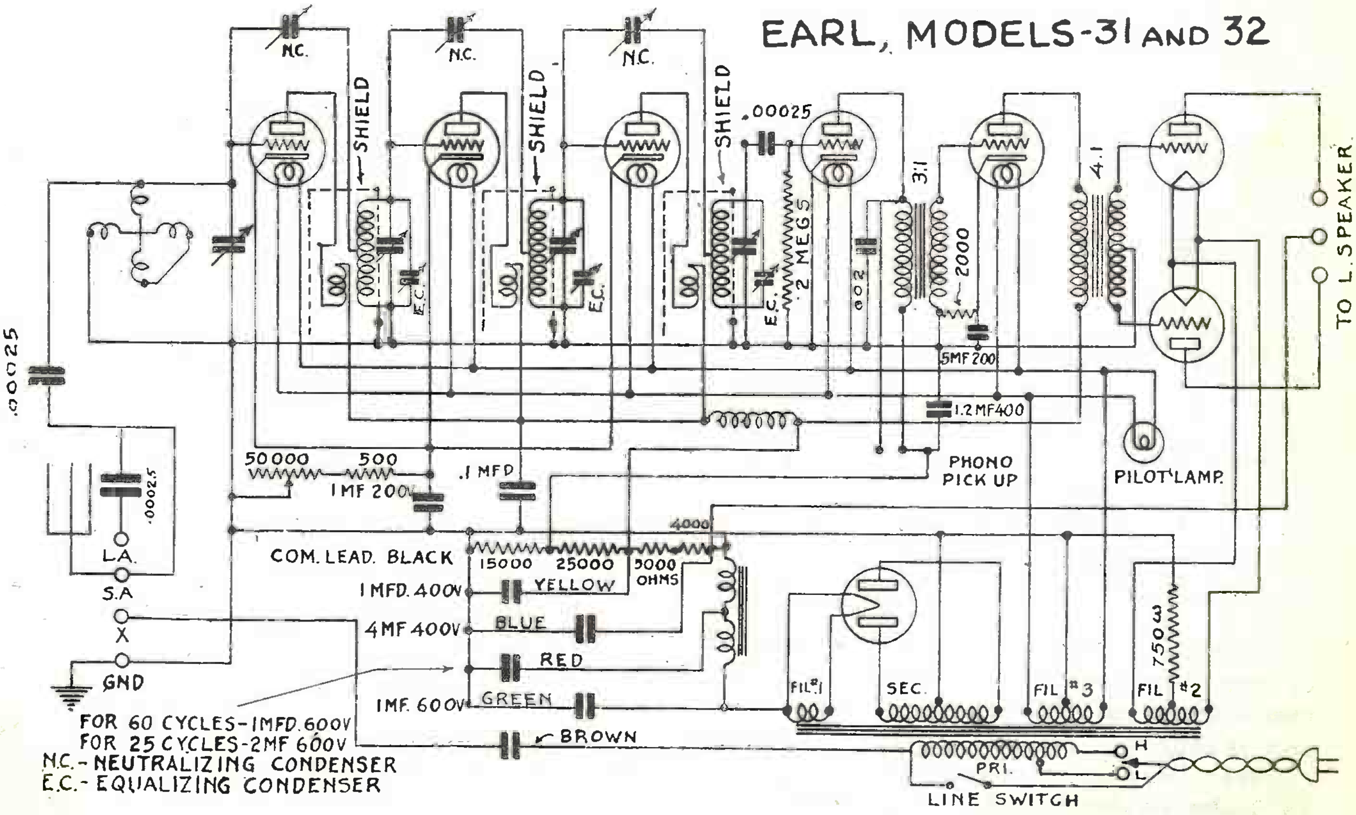

FOR 60 CYCLES-1MFD.600V
FOR 25 CYCLES-2MF 600V
N.C.-NEUTRALIZING CONDENSER
E.C.-EQUALIZING CONDENSER

CHAS. FRESHMAN CO., Inc.

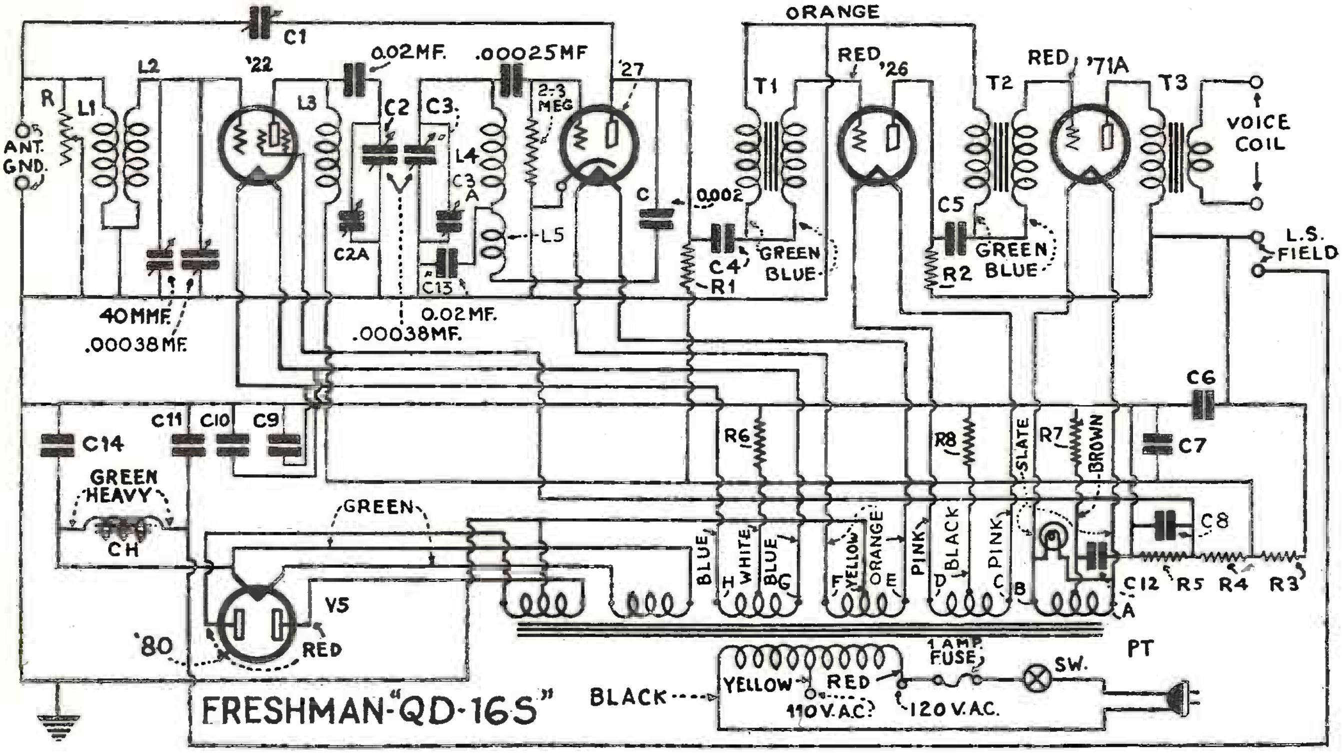

Schematic circuit of the Freshman "QD-16S" screen-grid receiver; correct coupling between L3 and L4 is an important selectivity factor in this set. Values not shown above are: C1, 35 mmf.; C4, C5, 0.25-mf. (1500 v.); C6, 2 mf.; C14, C11, 1 mf. (2000 v.); C7, C8, C12, 1 mf. (1000 v.); C9, C10, 0.25-mf. (500 v.). R1, R2, R3, R4, R5 are 40,000, 25,000, 12,500, 12,500, and 10,000 ohms, respectively

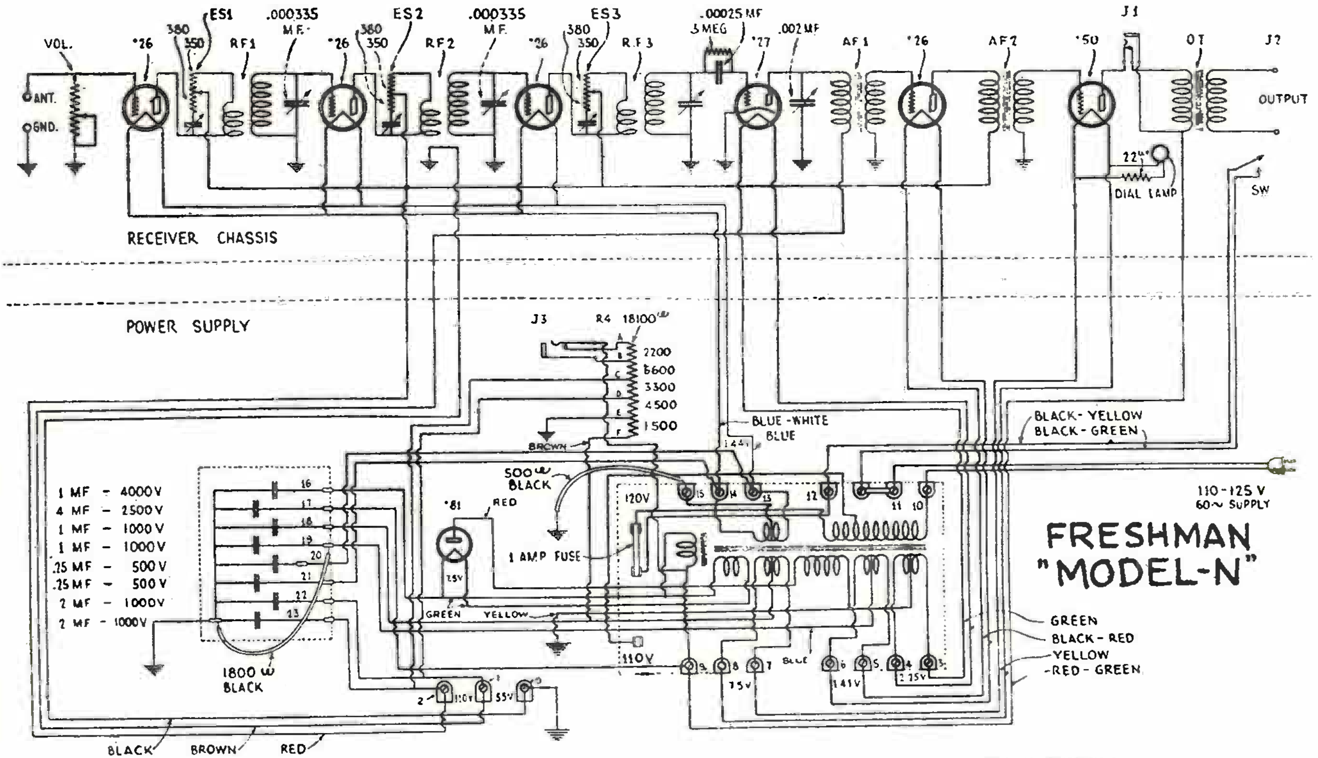

The Freshman "Model N" and its power pack; the numbering of the terminals shown here may be compared with that in the diagram of the layout at the right. The capacities and ratings of the condensers in the power unit are shown opposite each, respectively, at the left. Note the special 1800-ohm resistor lead shown here.

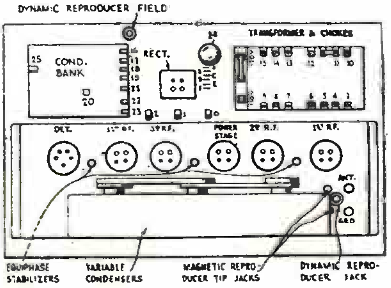

CHAS. FRESHMAN CO., Inc.

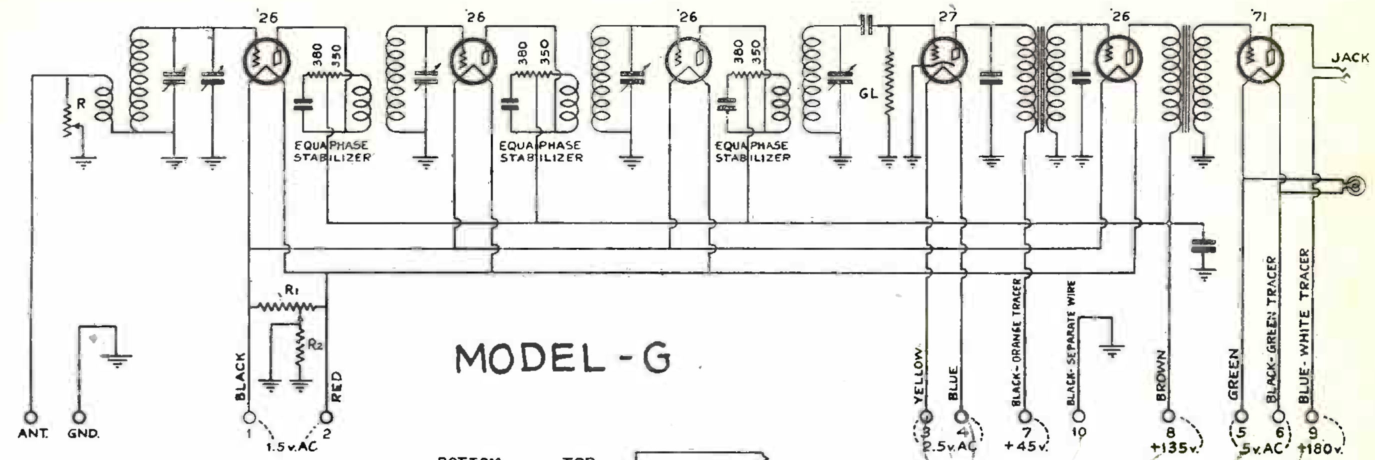

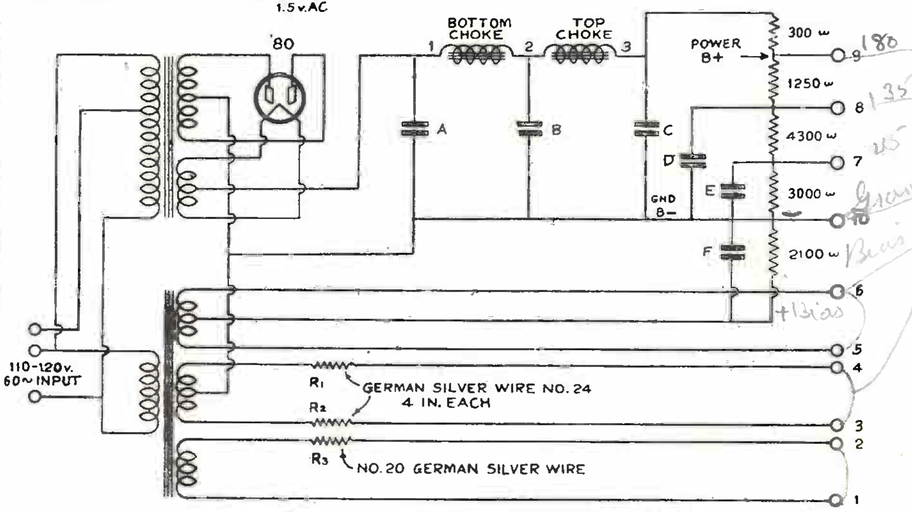

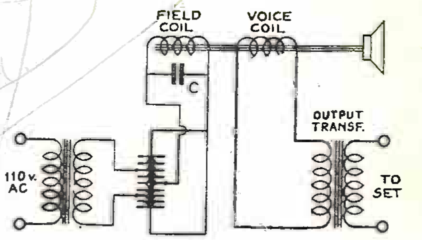

Wiring of the dynamic reproducer components.

Wiring of Model "G" power pack. The values of the condensers are as follows: A, 2-mf. (2,000); B, 2-mf. (2,000); C, 6-mf. (2,000); D, 4-mf. (1,000); E, 2-mf. (1,000); F, 1-mf. (1,000). The numerals in parentheses indicate the break-down potentials.

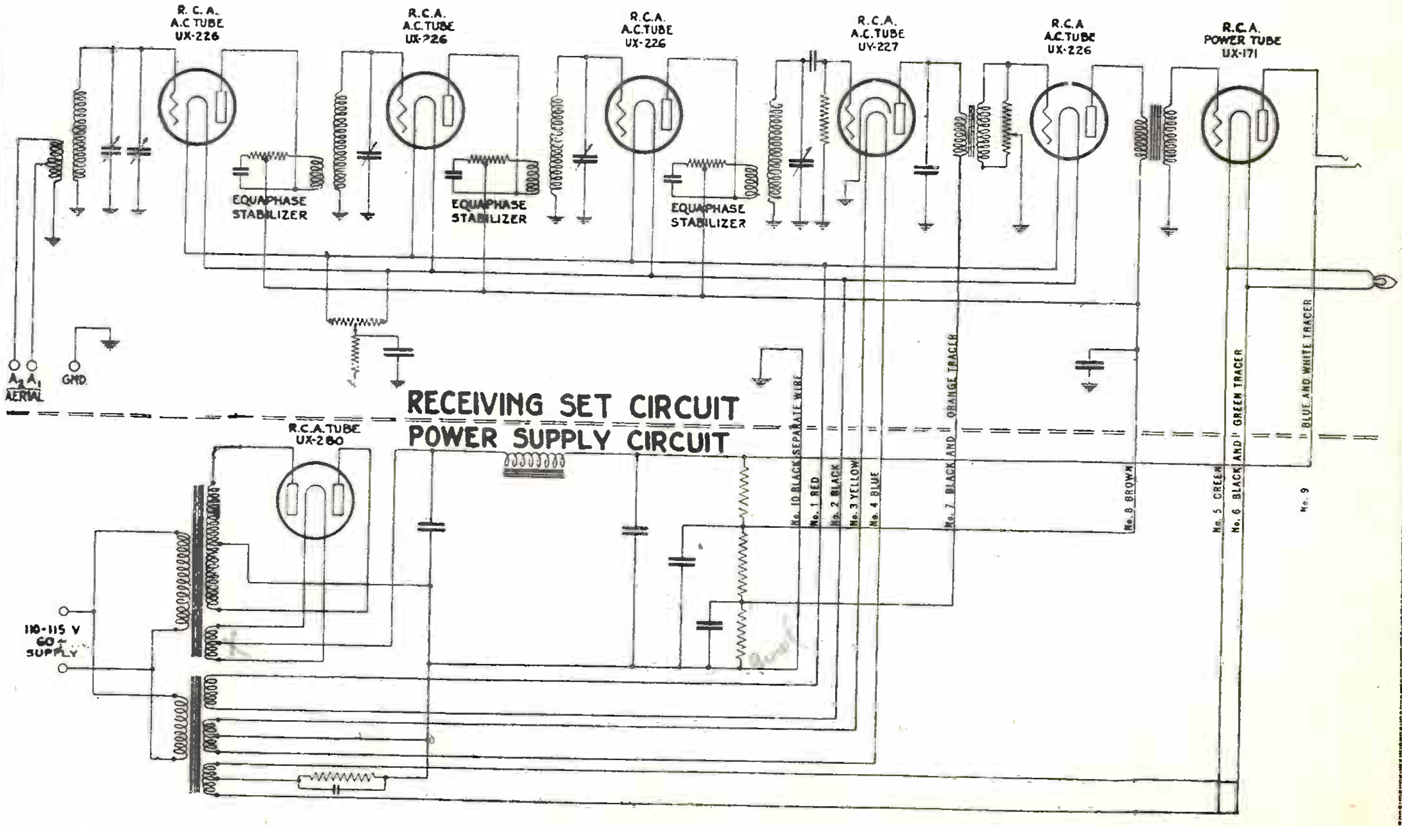

Schematic diagram of Model "G" Chassis and Model G-60-S Power Supply.
Note the one choke coil in Power Supply Circuit.

CHAS. FRESHMAN CO., Inc.

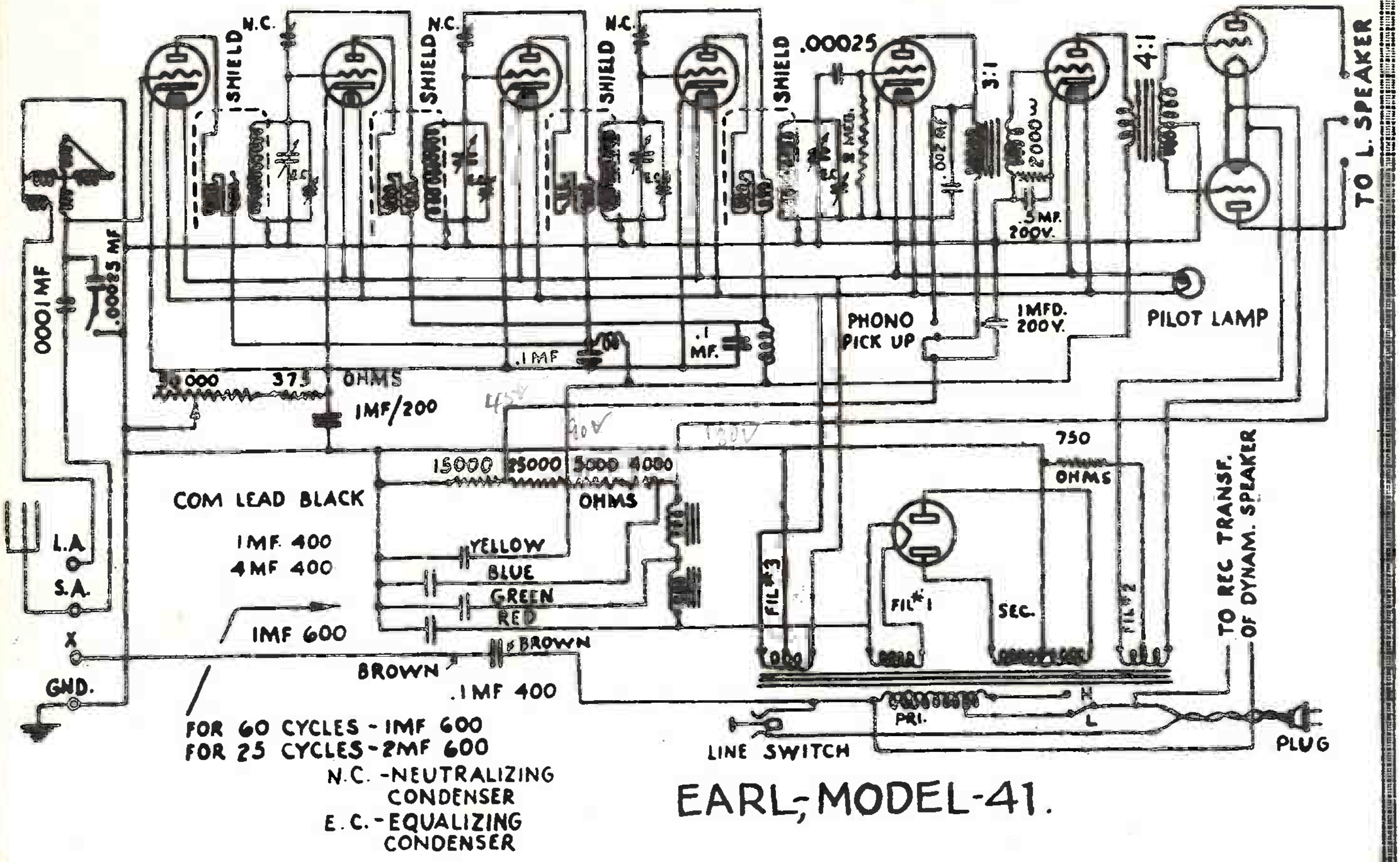

EARL; MODEL-41.

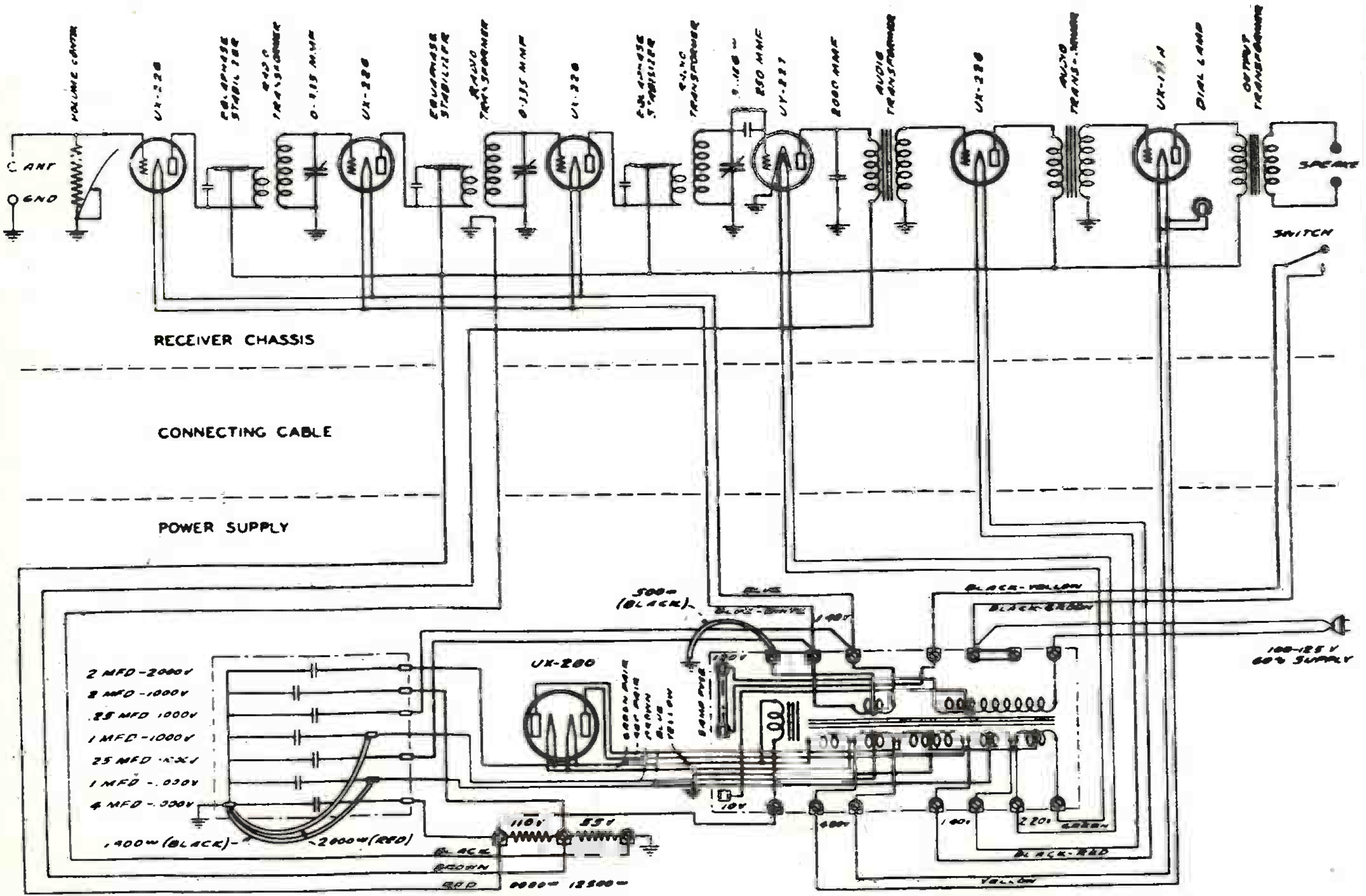

Freshman—Model M Receiver and M-60-S Power Supply Circuit

CHAS. FRESHMAN CO., Inc.

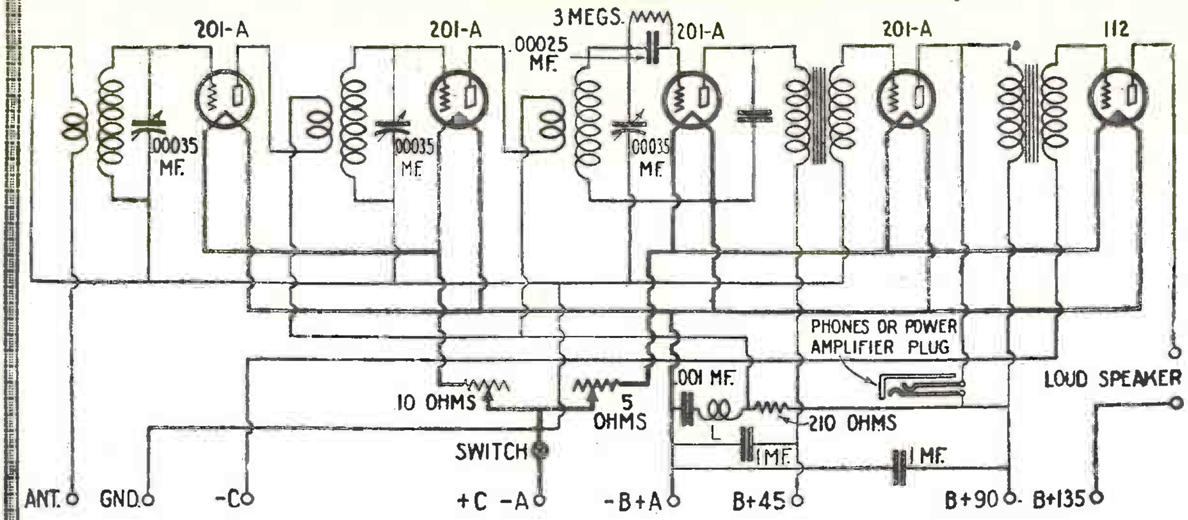

FRESHMAN MASTER-PIECE.

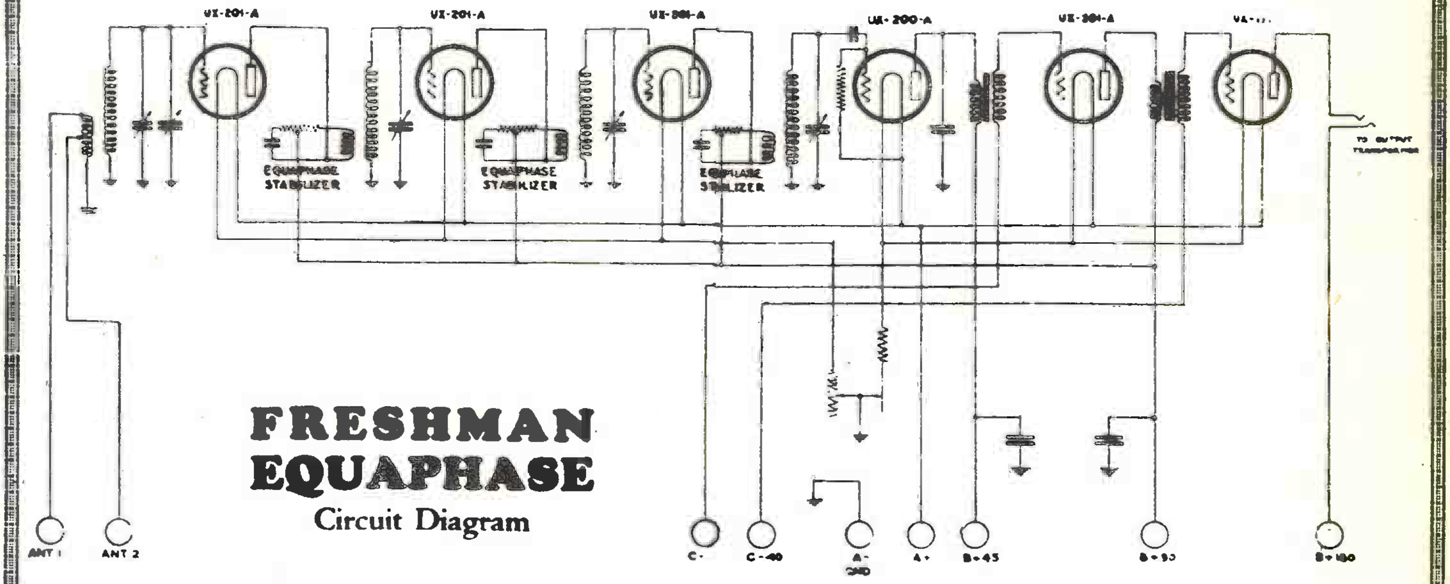

FRESHMAN EQUAPHASE
Circuit Diagram

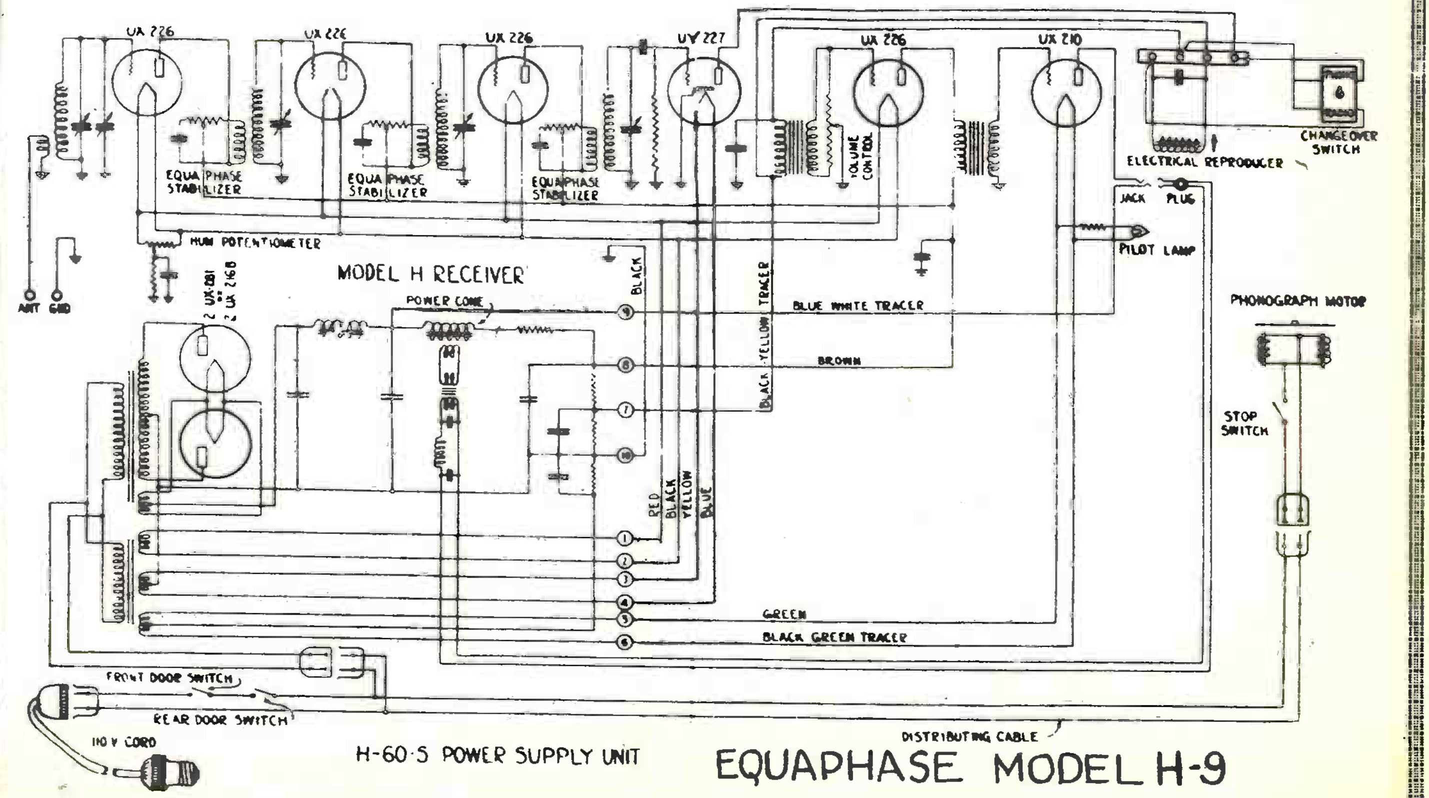

EQUAPHASE MODEL H-9

CHAS. FRESHMAN CO., Inc.

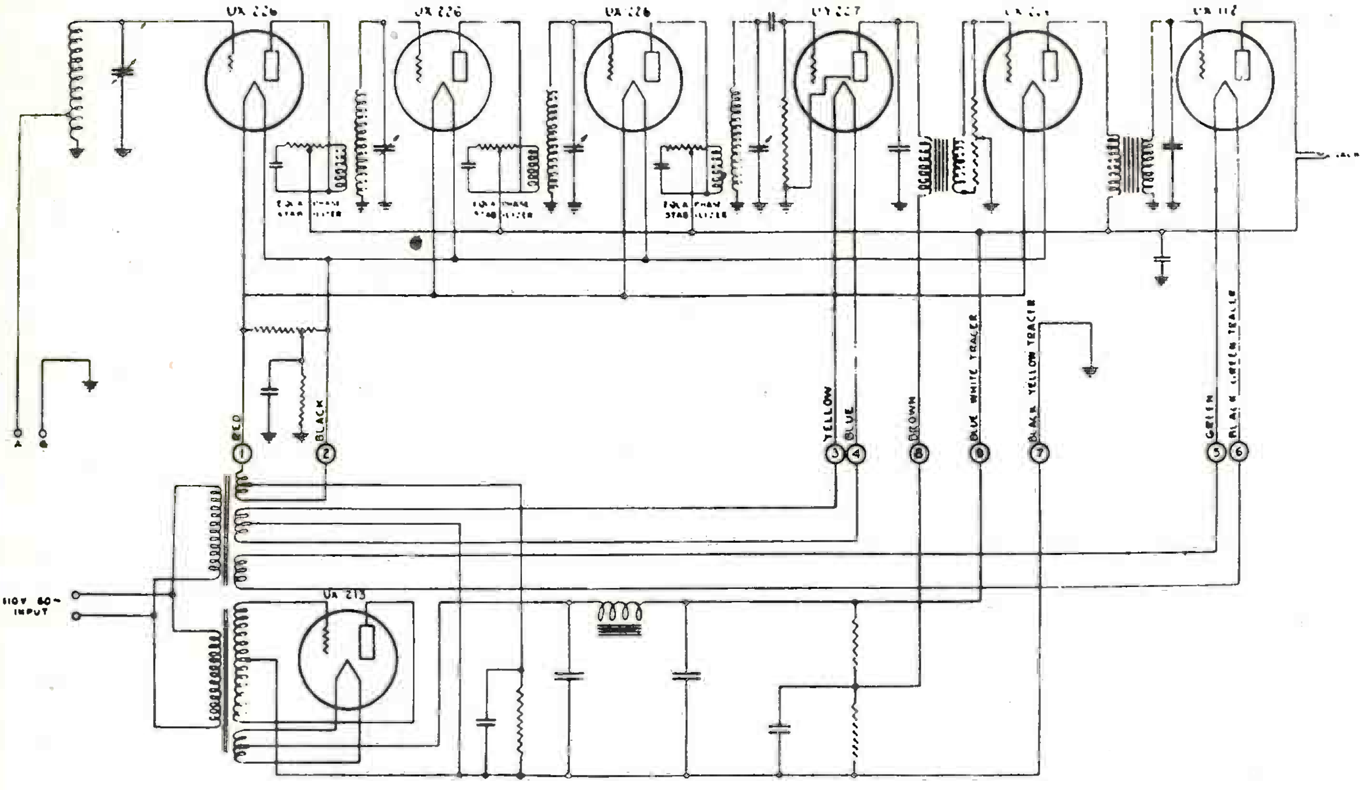

Combination Model K & K-60-S

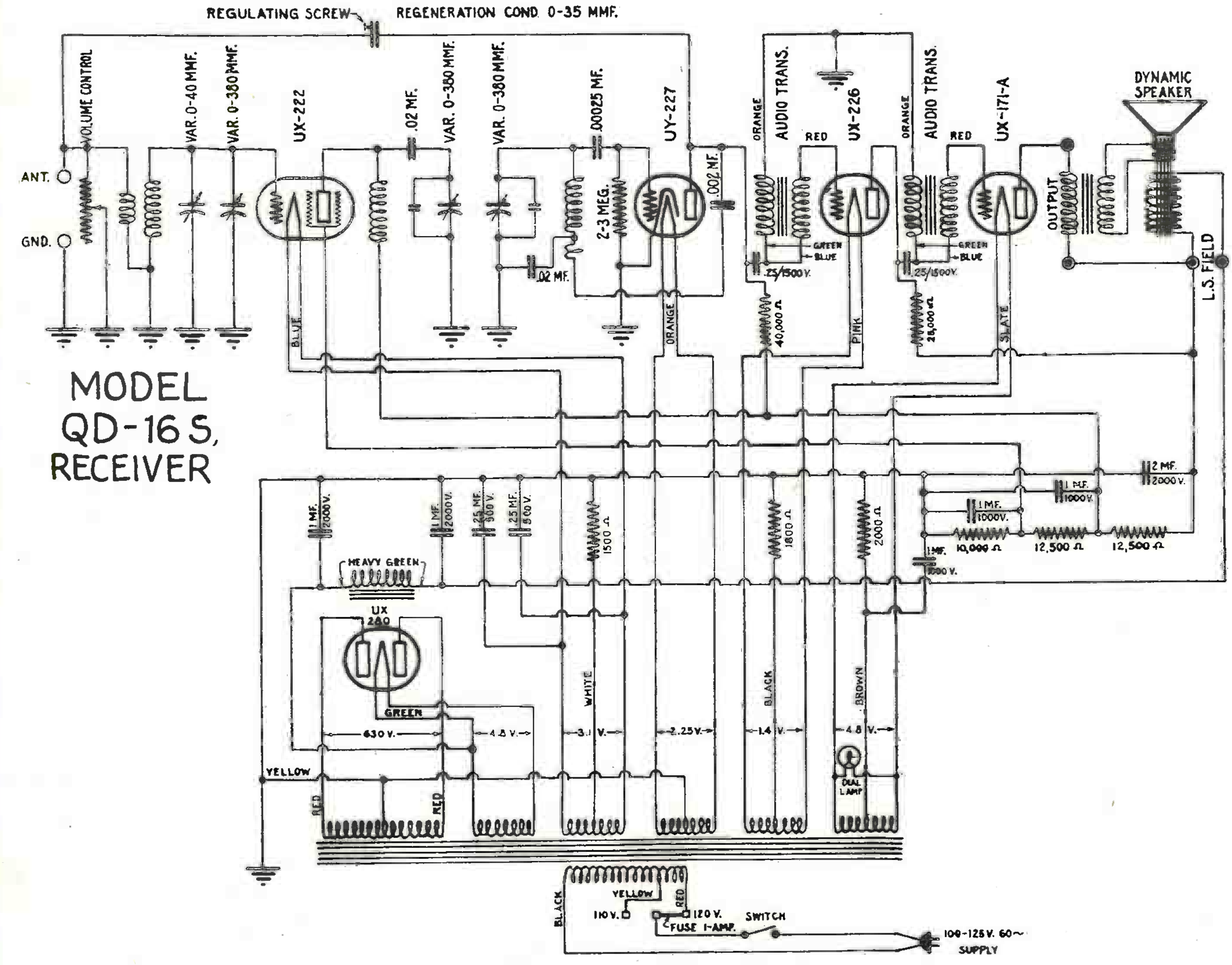

MODEL
QD-16 S,
RECEIVER

CHAS. FRESHMAN CO., Inc.

MODELS Q-15 AND Q-16

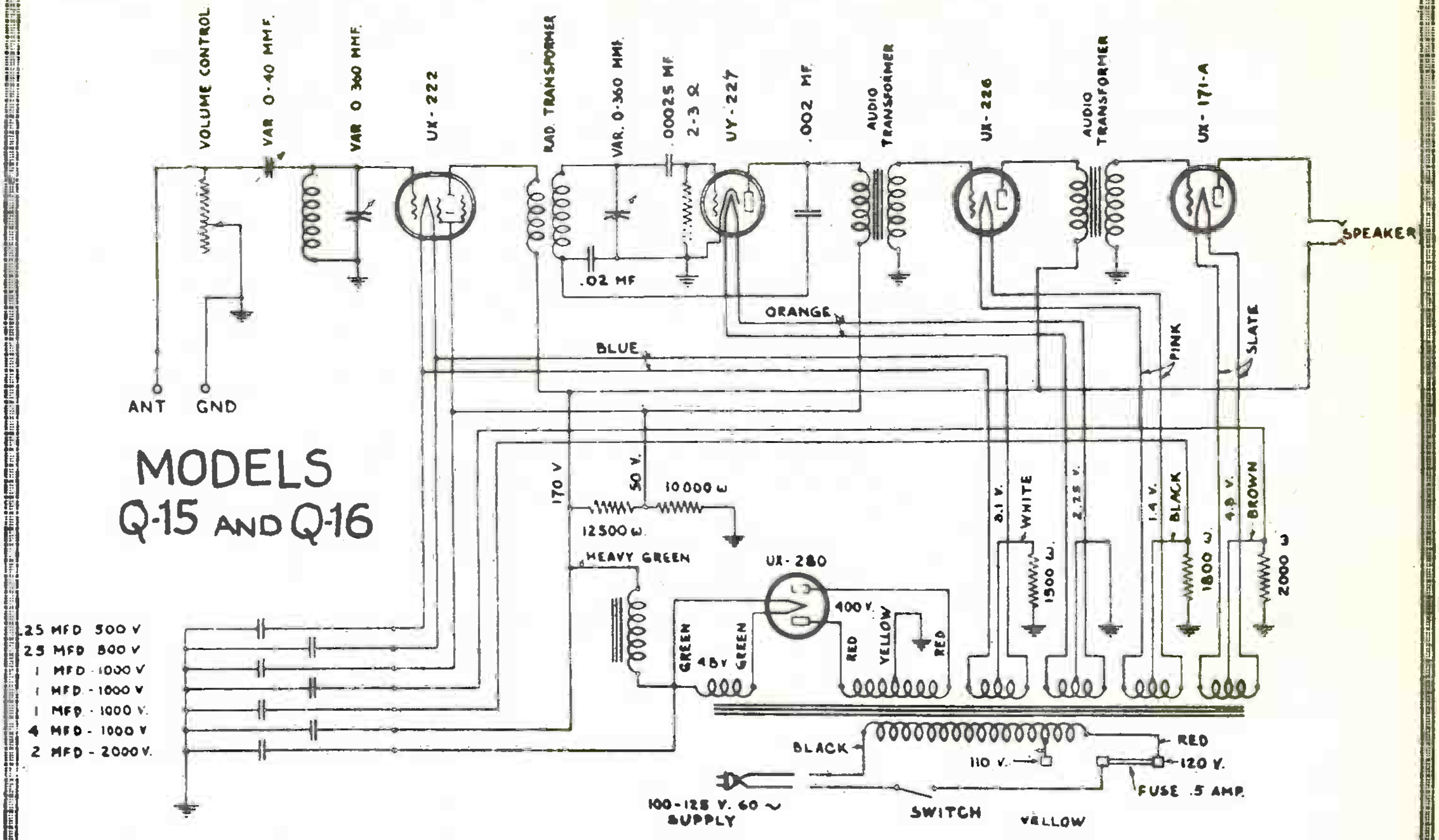

MODE 2N 2N-60-S REC. AND PWR SUPLY

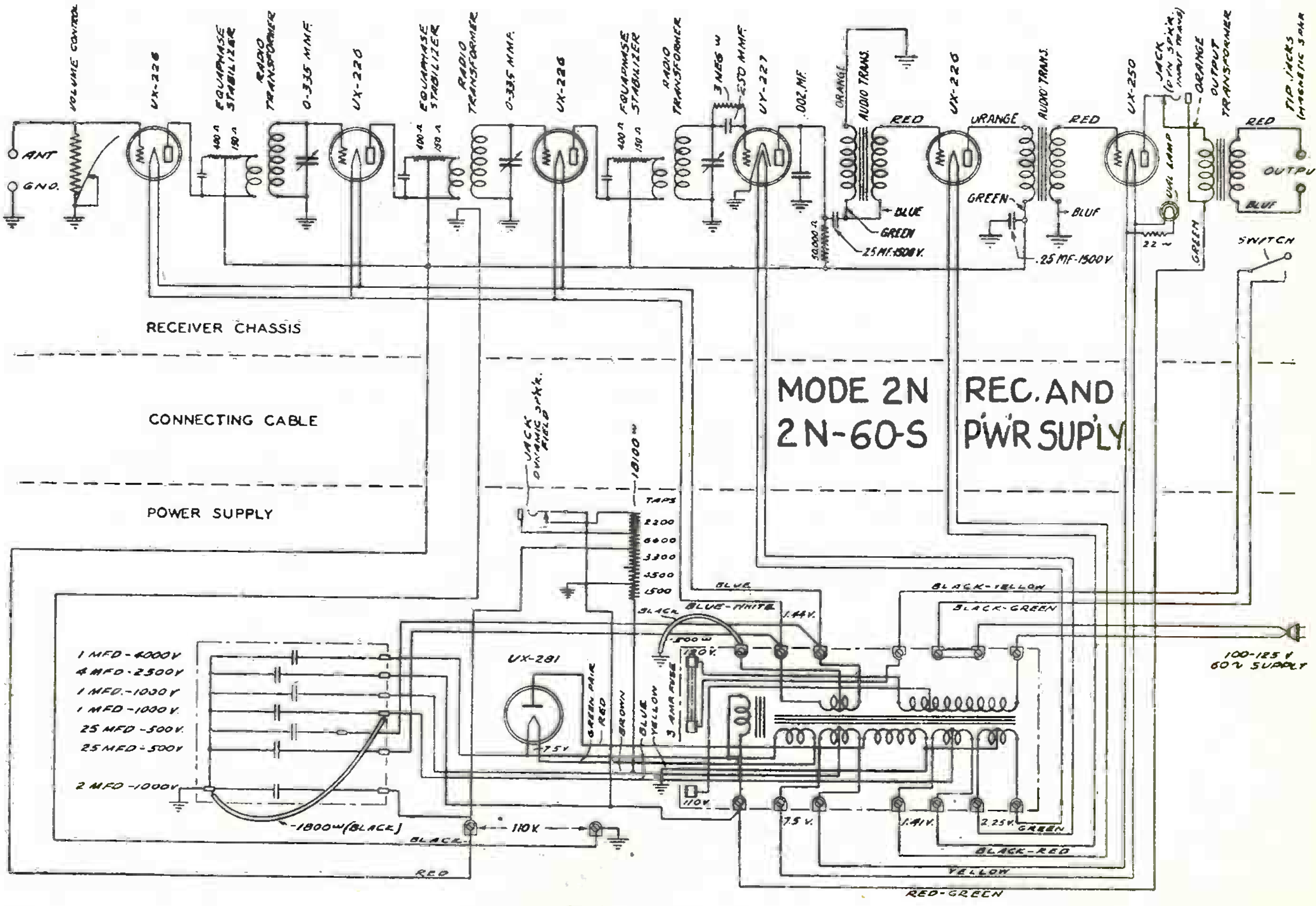

CHAS. FRESHMAN CO., Inc.

MODELS 21 AC. AND 22 A.C.

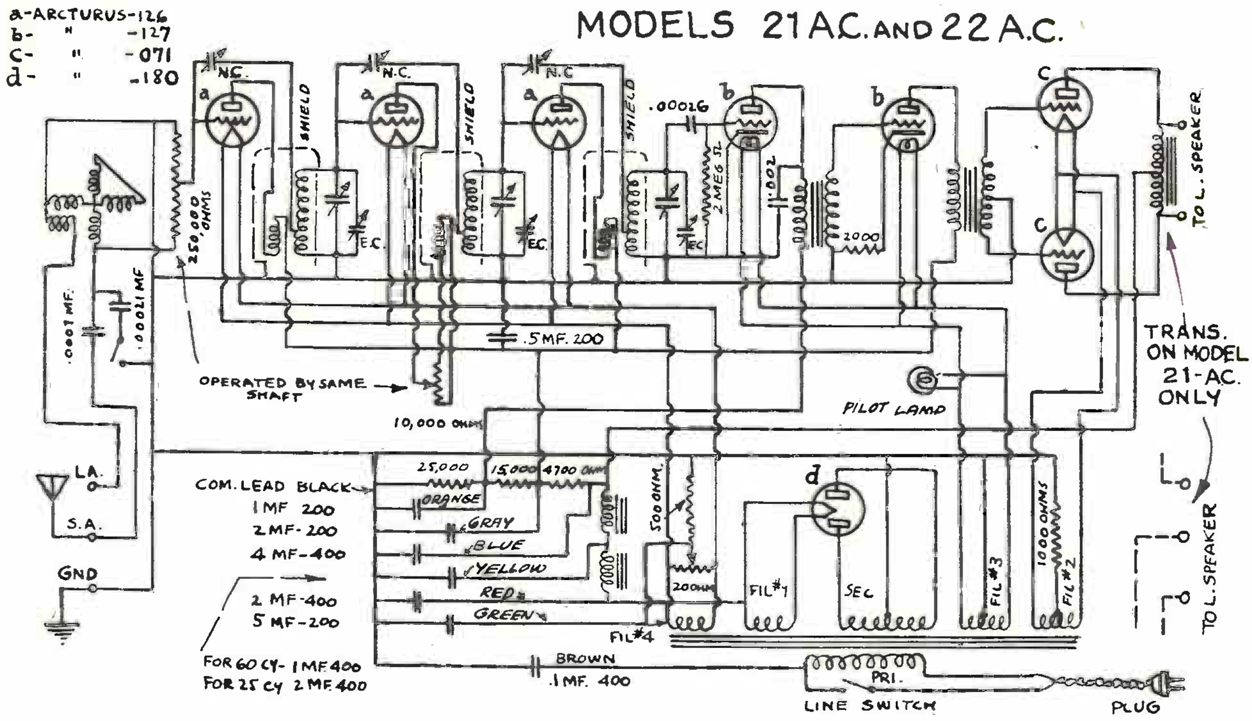

MODELS 3Q-15 AND 3Q-16.

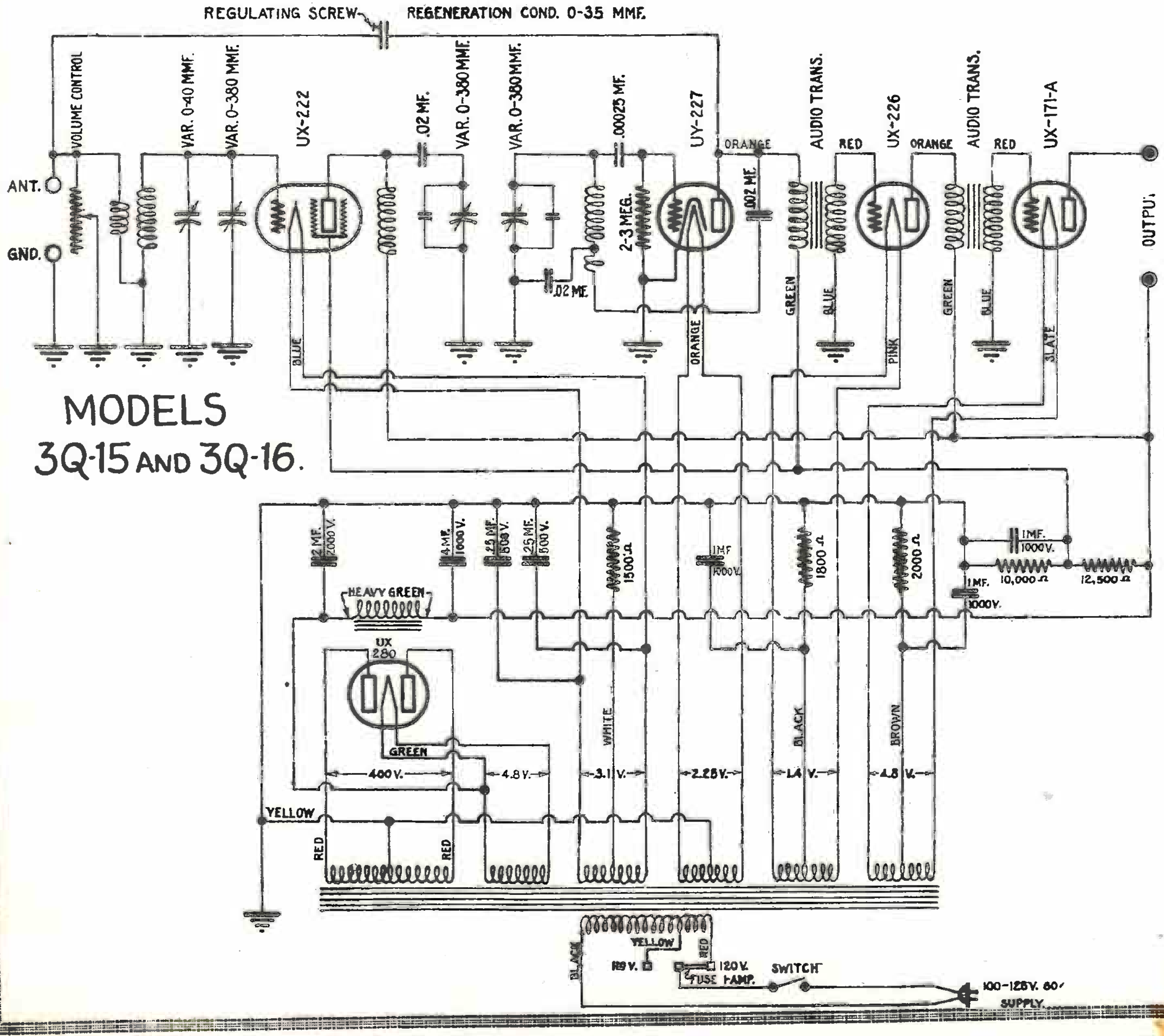

CHAS. FRESHMAN CO., Inc.

FRESHMAN MODEL 121

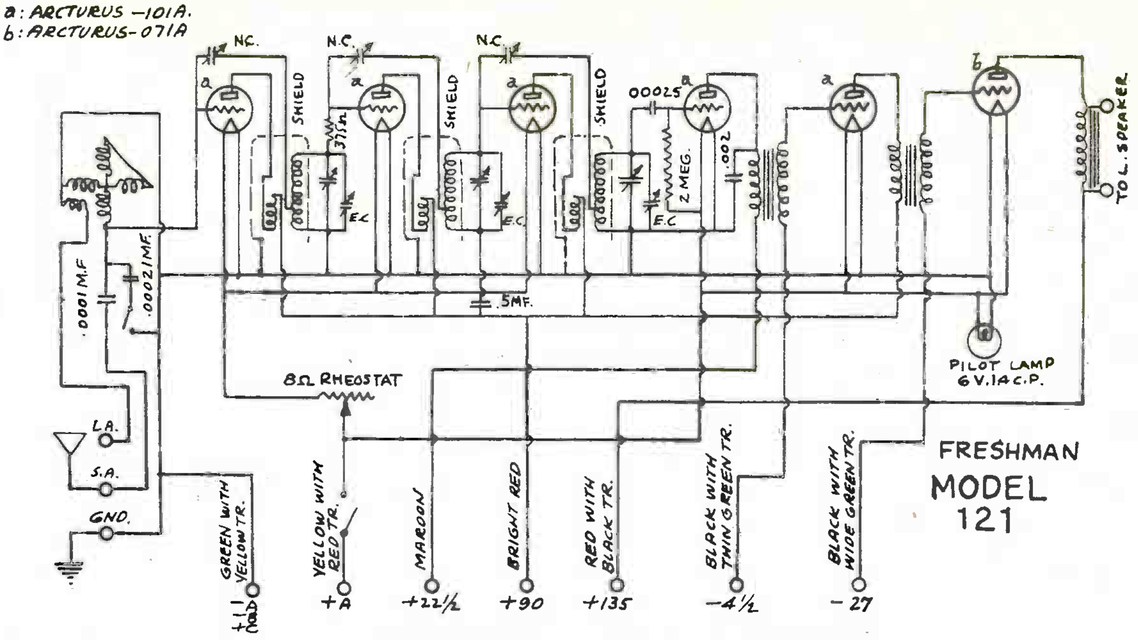

FRESHMAN — MODEL 21 D.C.

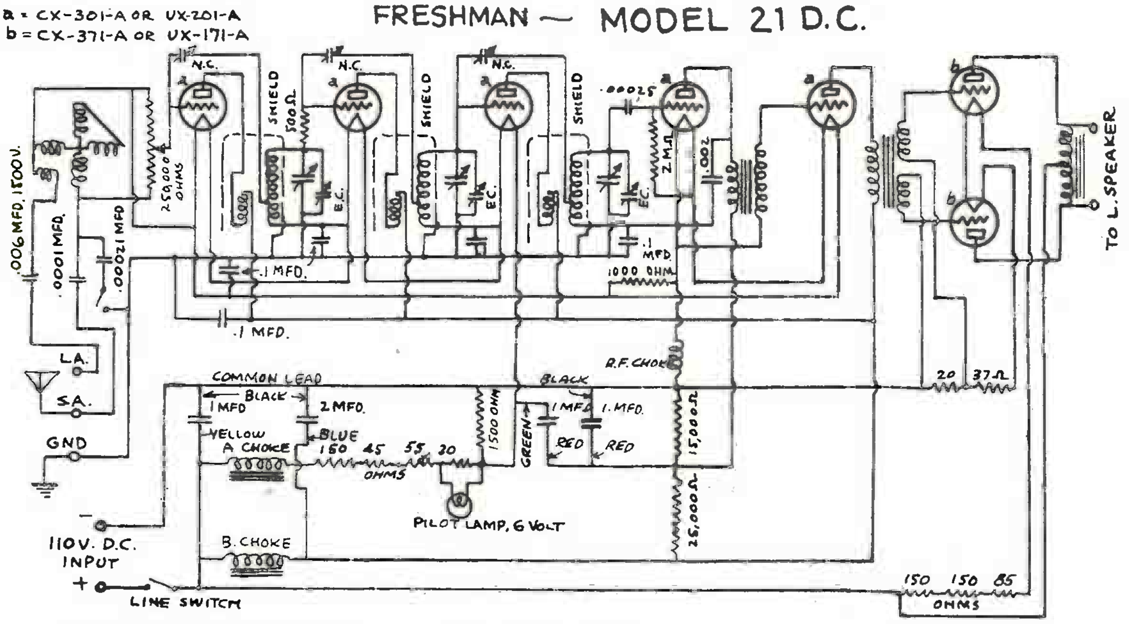

MODELS 31 D.C., 24 D.C. AND 33 D.C. (EARL)

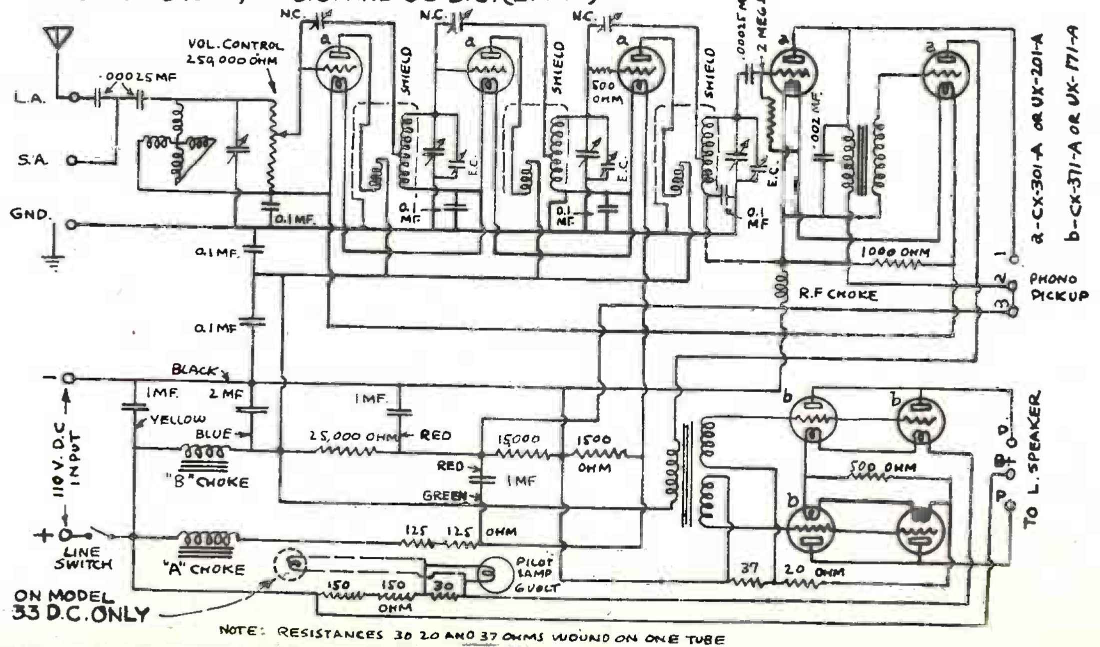

NOTE: RESISTANCES 30 20 AND 37 OHMS WOUND ON ONE TUBE

CHAS. FRESHMAN CO., Inc.

FRESHMAN MODELS-31-S AND 32-S, A.C.
EARL MODEL-33-S, A.C.

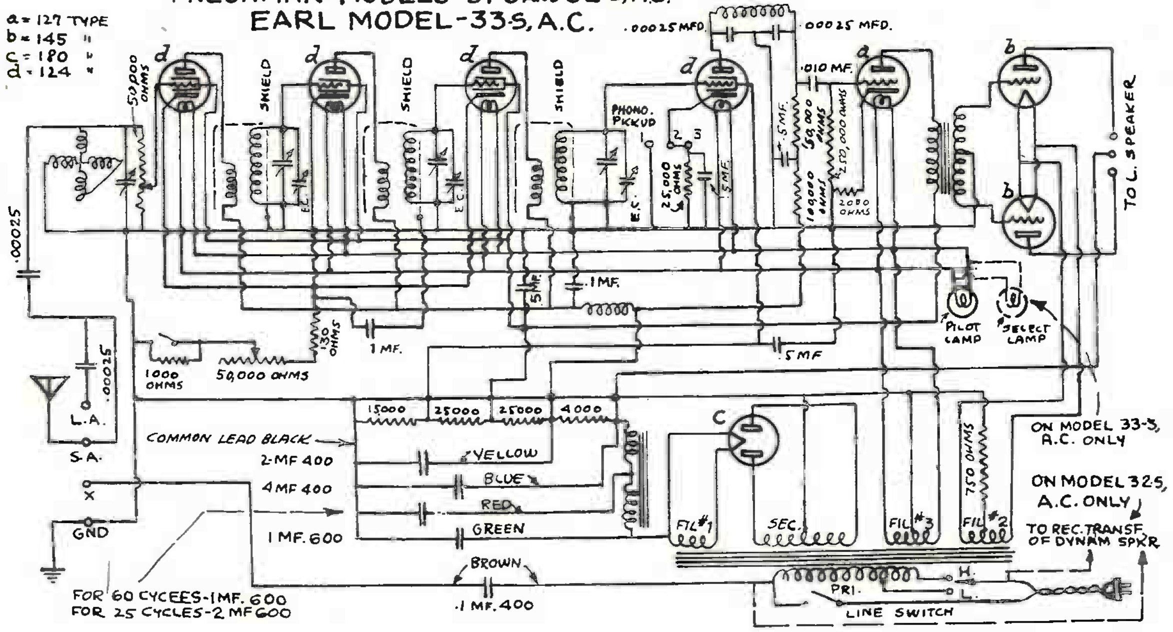

MODELS 31 & 32 AC. (FRESHMAN)

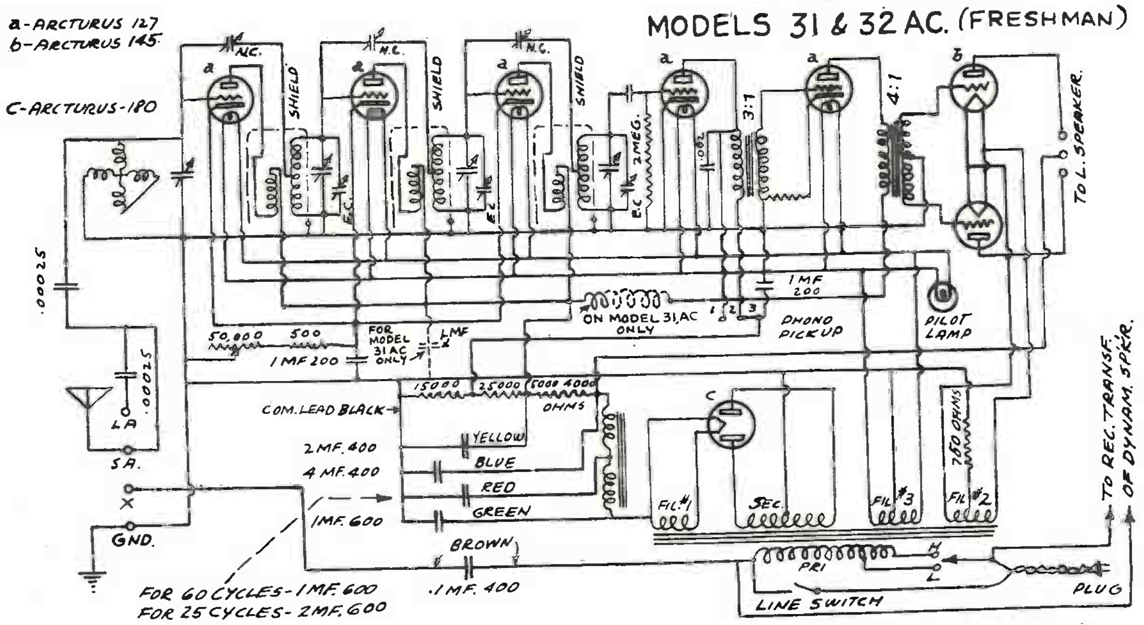

MODEL 41 A.C. (FRESHMAN)

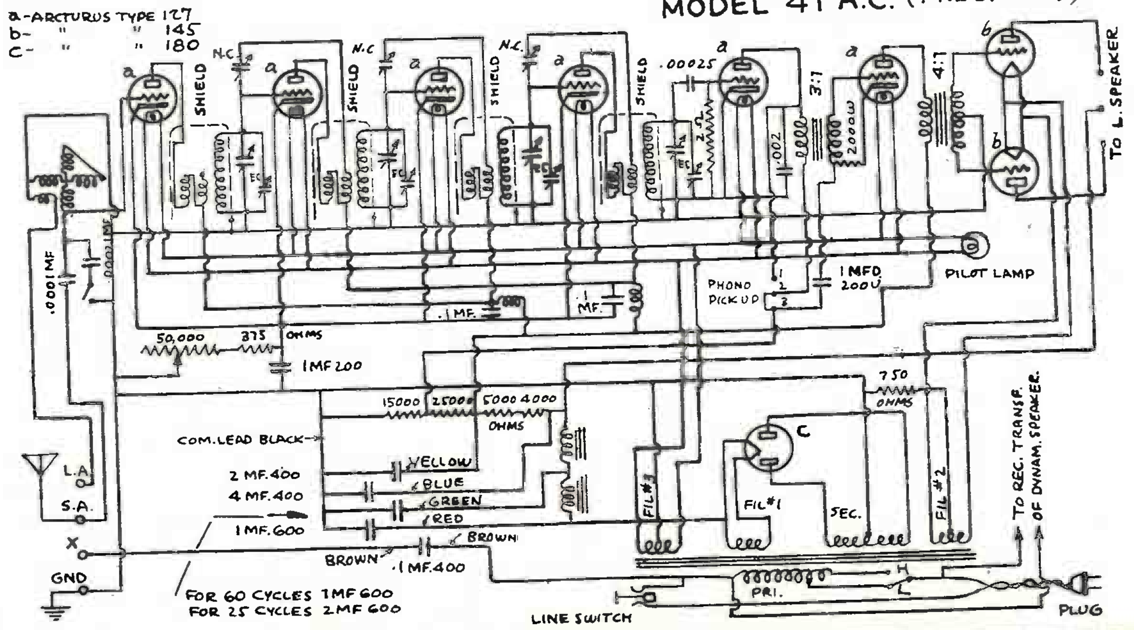

GENERAL MOTORS RADIO CORP.

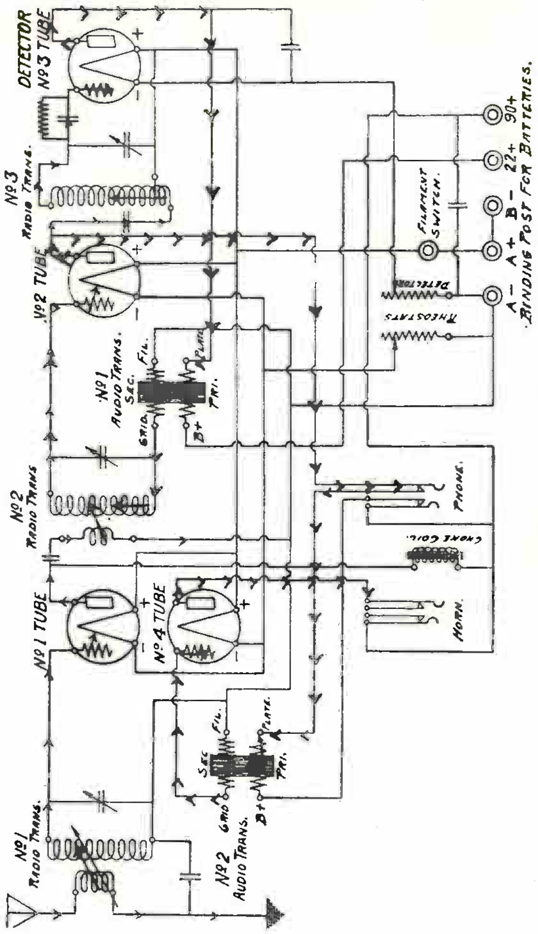

OEM-7 — 4-Tube

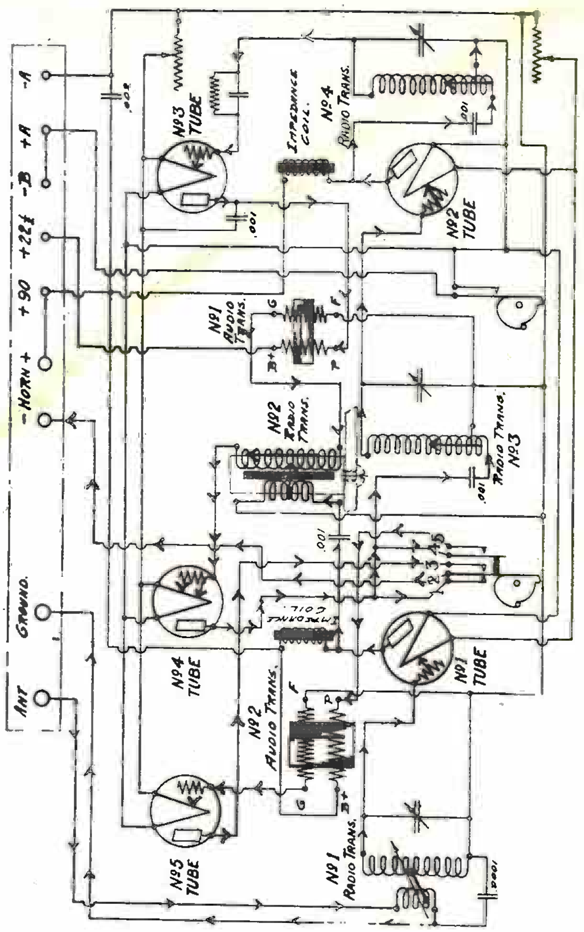

MODEL #5044

DAY-FAN FIVE — 5-Tube — 1925 Model

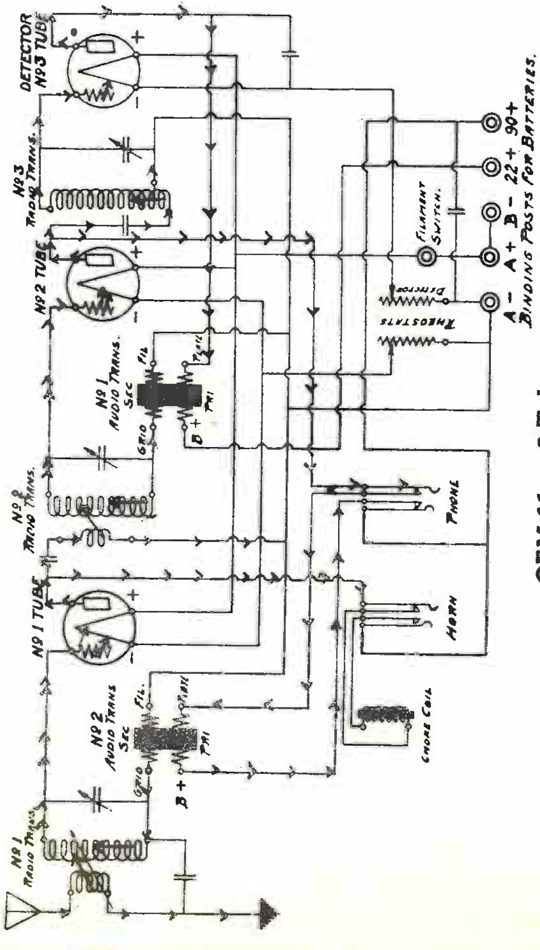

OEM-11 — 3-Tube

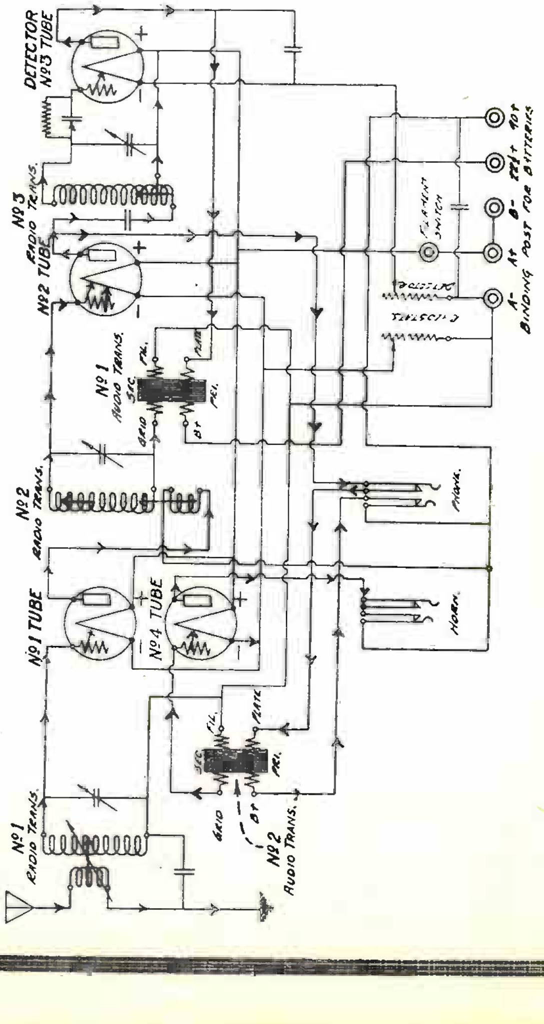

OEM-7 — Super-Selective

Radio Service Data Sheets

DAY-FAN FIVE "5044"

The circuit used in this receiver is reflexed. Thus, V2 functions as an amplifier of both radio- and audio-frequency currents. With SW1 in position on 1, the audio output of V2 is fed to the reproducer; in position 2, V5 is introduced as a third stage of A.F. amplification.

Units R.F. Choke 1 R.F. Choke 2 and R.F.T. 2 are iron-core instruments in radio-frequency circuits.

A Continuity Test of the receiver should check as indicated below. The reference numbers appear on the "Tube Layout."

Terminals	*Correct*	*Cause if Wrong*
Plus 90-2	High resis.	Open or shorted R.F. Choke 1 or open lead
Plus 90-6	High resis.	Open or shorted R.F. Choke 2 or open lead
Plus 22½-11	High resis.	Open or shorted pri. of AFT1 or open lead
Plus 90-15	High resis.	(Sw. 1 on 2.) Open or shorted AFT2 or open lead
Plus 90-19	High resis.	(Reproducer plugged in and SW 1 on 2.) Open or shorted reproducer or lead
Minus "A"-1	Dead short	Open RFT1 sec. or open lead
Minus "A"-5	Dead short	Open RFAT3 or open lead
Plus "A"-C3 stator	Dead short	(SW2 closed.) Open lead
Minus "A"-16	High resis.	Open or shorted RFT2 sec., AFT1 sec. or open lead.
Minus "A"-20	High resis.	Open or shorted AFT2 sec. or open lead
Aerial-ground	Dead short	Open RFT1 pri. or open lead
Minus "A"-2	Open	Shorted .001 mf. coupling cond.
Minus "A"-tap 3 of RFAT3	Dead short	Open pri. part of RFAT3 or open lead
Minus "A"-15	Open	(Sw1 open) Shorted .001-mf. coupling cond.
Plus "A"-tap 3 of RFAT4	Dead short	Open pri. part of RFAT4 or open lead
Plus "A"-6	Open	(Sw2 closed.) Shorted .001-mf. coupling cond.
Minus "A"-11	Open	Shorted .001-mf. by-pass cond.

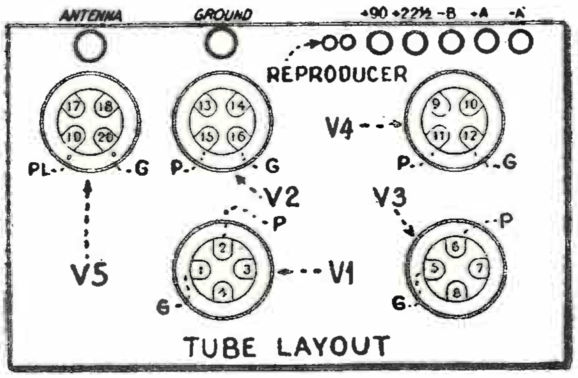

TUBE LAYOUT

"Off logging" may be due to the pointers having slipped, or to the rotor and stator plates of the tuning condenser not being in correct register. The former may be corrected by tuning to a particular station, loosening the pointer lock-nut, setting the pointer to approximately the correct point for that station, and tightening the lock-nut. The condenser adjustment may require centering the rotor plates in relation to the stator plates. A lock-nut on the end of the rotor shaft is available for this purpose; it is loosened, the rotor an dstator plates are centered, and then tightened. If one or two of the plates remain out of alignment, they may be centered by careful bending of the plates. If difficulty is experienced in getting distant stations while locals are on, it will be well to check the length of battery leads. Those which are too long will pick up sufficient energy from the locals to cause these signals to "ride in" on top of distant station programs. The solution is to keep battery leads as short as possible.

A peculiarity of this particular receiver is that an antenna length of less than sixty feet will not (contrary to usual practice) result in greater ease of tuning through local stations; a length of more than 100 feet is also inadvisable. The explanation lies in the "selector coil" of this receiver. With an antenna shorter than sixty feet, sufficient energy is not received from the distant station to allow the selector to be turned to a point where the local station is cut out, and at the same time the distant station is brought in. In other words, a strong signal from the distant station as well as from the local allows the user to select either station by proper use of teh selector. Selectivity in this receiver depends to a major extent on the setting of the RFT1 primary coil P in relation to S; reduced coupling increases the selectivity but at the same time the sensitivity, within certain limits. However, the service man may install a small variable condenser of the mica-dielectric type, inside the cabinet, and connect it in series with the antenna lead to the RFT1 primary. By adjustment of this unit and of the inductive coupling, a point of optimum selectivity and sensitivity may be obtained. (This receiver was designed for selectivity conditions not as stringent as those of the present day, and it is not as easy now to obtain interference-free reception in congested districts as formerly.) A suggestion for obtaining additional selectivity is to connect a compact air-dielectric variable condenser from 6 to 11, adjusting it to cause regeneration. It may be mounted at a convenient point on the panel. If regeneration on the longer waves is insufficient, it may be necessary to reduce to .001-mf. the capacity of the by-pass condenser, connected from the plate of V4 to "A —." Still stronger regeneration may be obtained by connecting a radio-frequency choke coil between the plate and AFT1 primary lead of V4. A safety measure recommended for these receivers when operating from "B" batteries is the insertion of a fixed condenser of .01-mf. capacity in series with the variable regeneration condenser mentioned above. A caution regarding this installation is to keep leads as short as possible, and to shield these new leads. The voltage tests of this particular model receiver were obtained with a Weston Student Galvanometer Model 375. With a 4½-volt battery supply, a 7,000-ohm series resistor is used. (An approximation of this value is secured by the use of the secondary of a "replacement" A.F. transformer.) "Sw 1" is the "Speaker Switch."

The Reflex Circuit

An explanation of the paths which the varying R.F. and A.F. currents follow may be an aid to deterfining the faults which may be encountered in receivers of this type.

The R.F. input is amplified by V1; R.F. Choke 1 forces the R.F. signal to pass through RFT2 to V2; here another plate-circuit impedance (AFT2 pri. or the reproducer) keeps back the R.F., which continues to V3, via RFAT3, and then to V4, being again blocked by R.F. choke 2. The A.F. output of V4 is "reflexed" through AFT1 back to V2; and the A.F. output of V2 either actuates the reproducer or is passed on through AFT to V5 (the option being determined by SW1). Consequently, V1 is the first R.F. tube; V2 is second R.F. and first A.F.; V3 is third R.F.; V4 is the detector; and V5 is the second A.F.

Other reflex receivers made by Day-Fan are the "OEM-11" 3-tube; "OEM-7" 4-tube; "OEM-7" 4-tube "Super-Selective;" and "OEM-12" 4-tube. A word picture distinguishing one from the other follows. The OEM-21 receiver has two stages of tuned R.F. and two of A.F. amplification.

The "OEM-7" receiver has one T.R.F. stage followed by another T.R.F. stage reflexed for first A.F. The second A. F. is a separate tube. The "Super-Selective" varies from this model only in the looser coupling, through the R.F. transformer; as does the "OEM-12" from the "OEM-11."

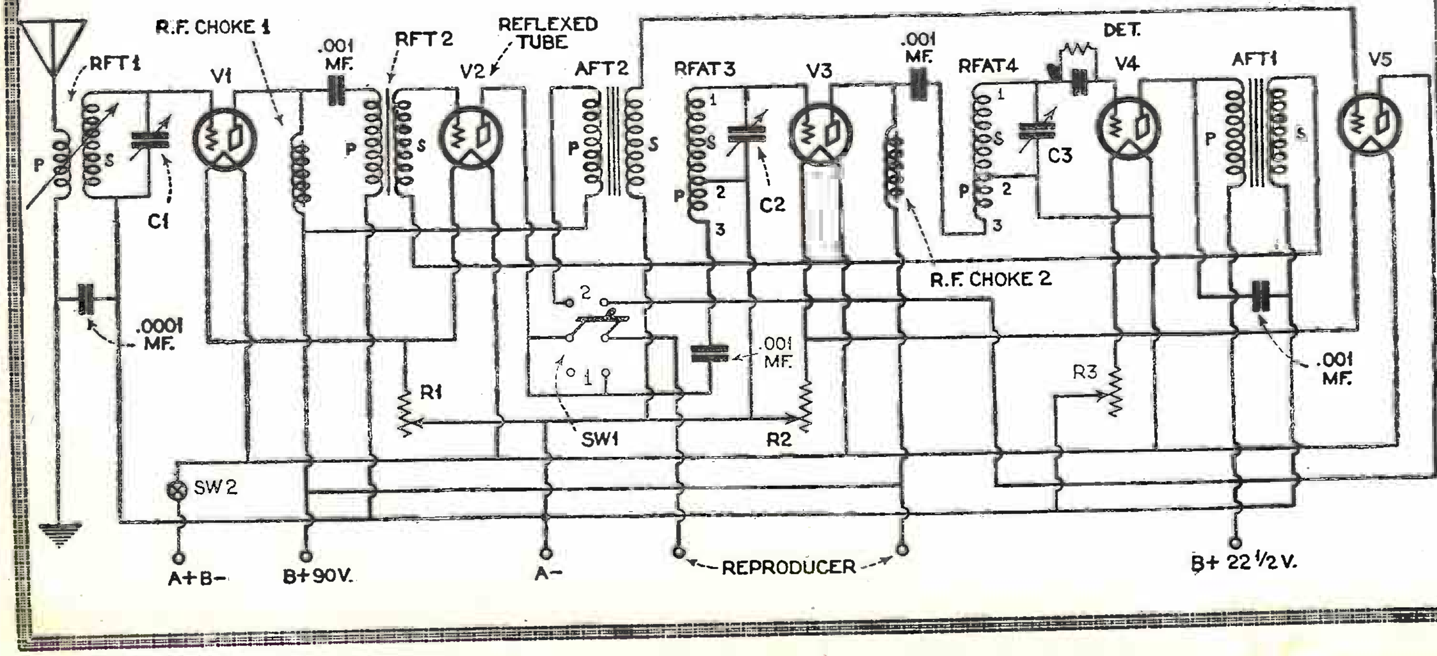

GENERAL MOTORS RADIO CORP.

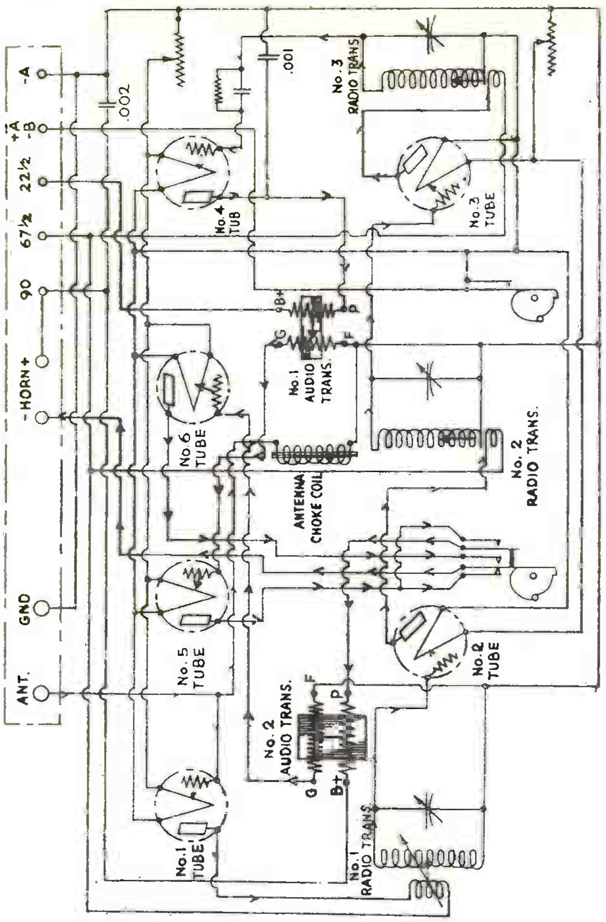

Day-Fan Six—6-Tube

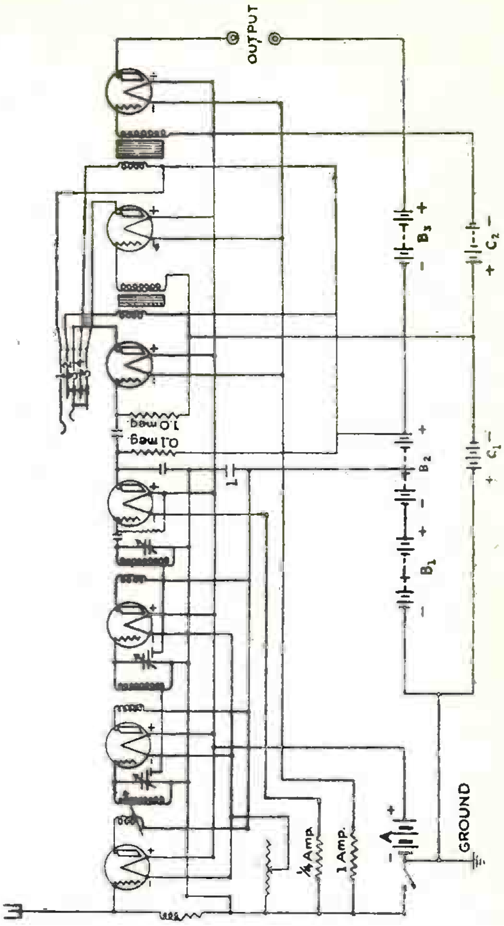

DAY-FAN 7—7 TUBE

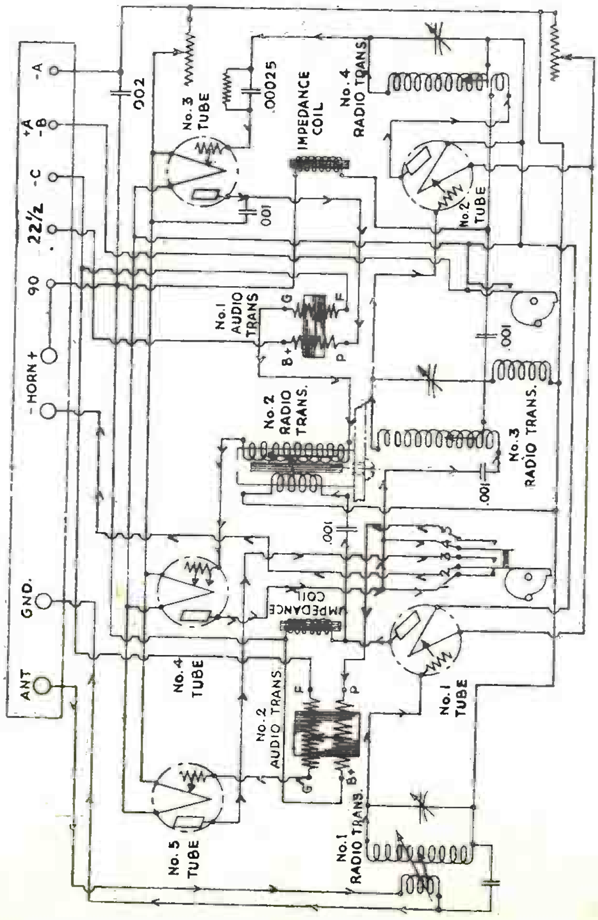

Day-Fan Five Twenty-Seven—5-Tube

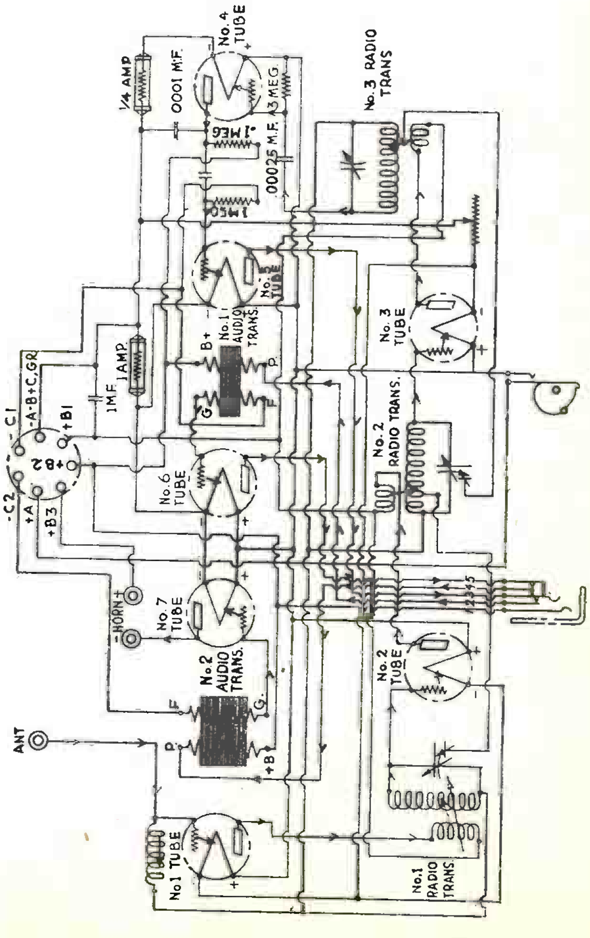

Day-Fan Seven—7-Tube

GENERAL MOTORS RADIO CORP.

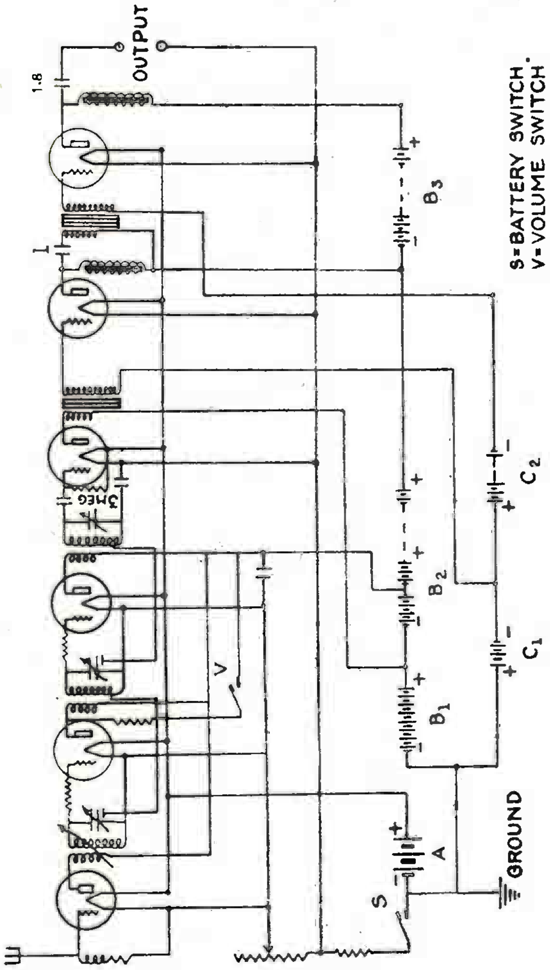

DAY-FAN 6 B—6 TUBE

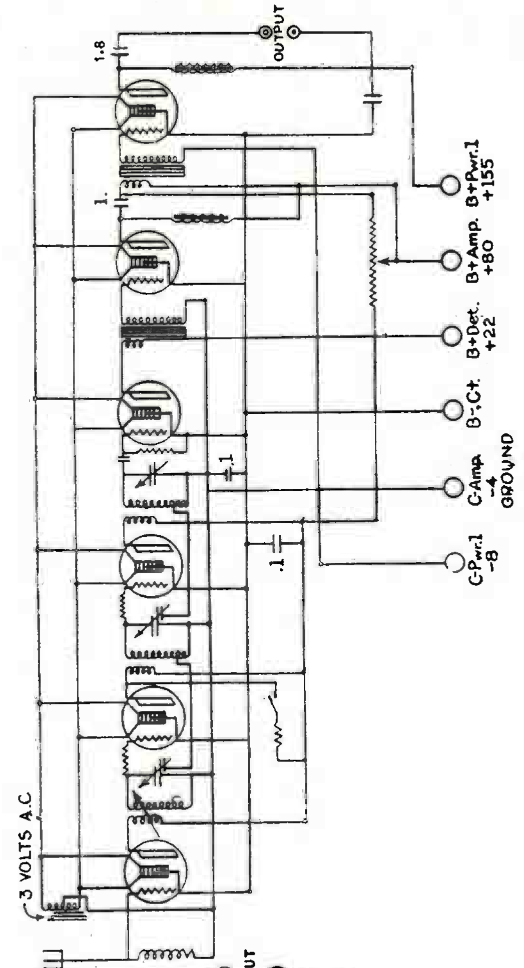

DAY-FAN 6 A. C.—6 TUBE

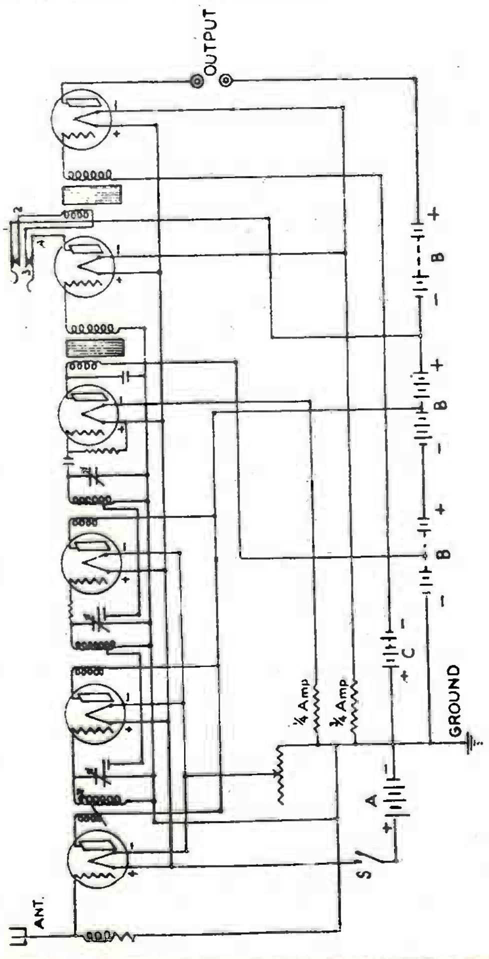

DAY-FAN 6—61—6 TUBE

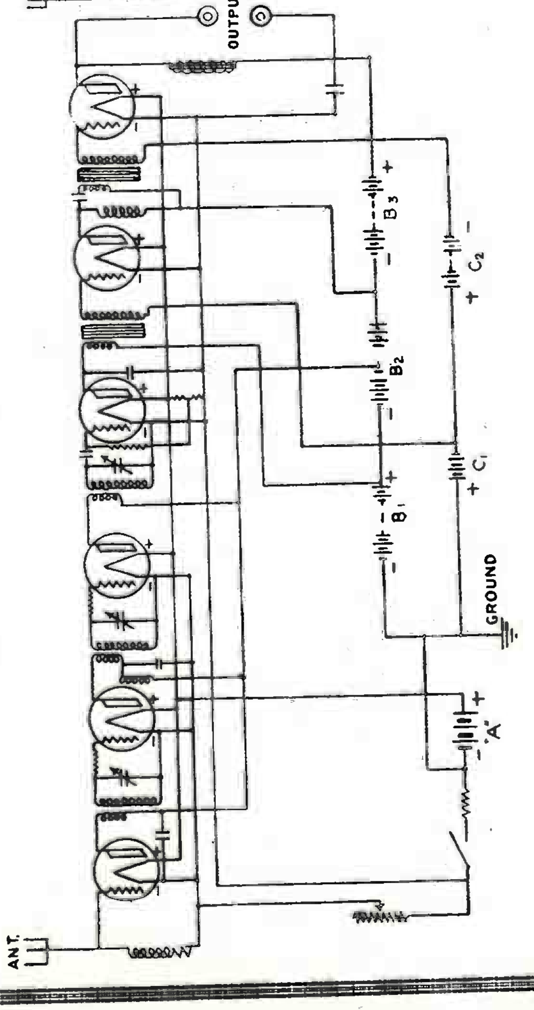

DAY-FAN 6 JUNIOR—6 TUBE

GENERAL MOTORS RADIO CORP.

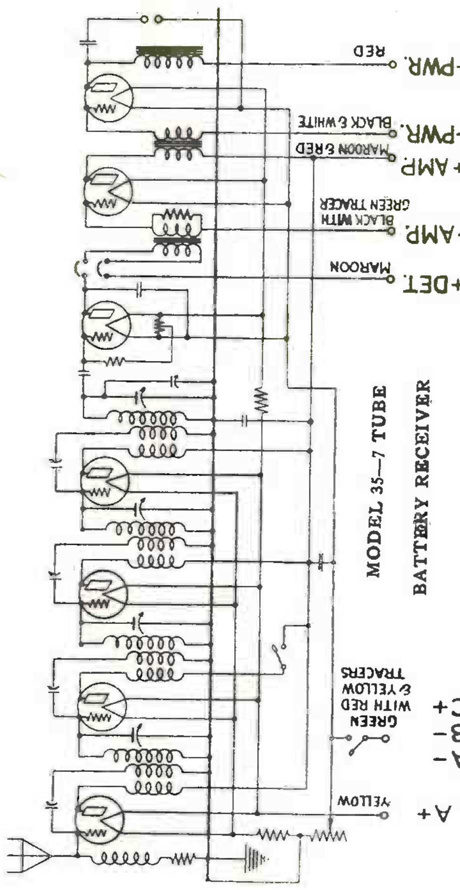

MODEL 35—7 TUBE
BATTERY RECEIVER

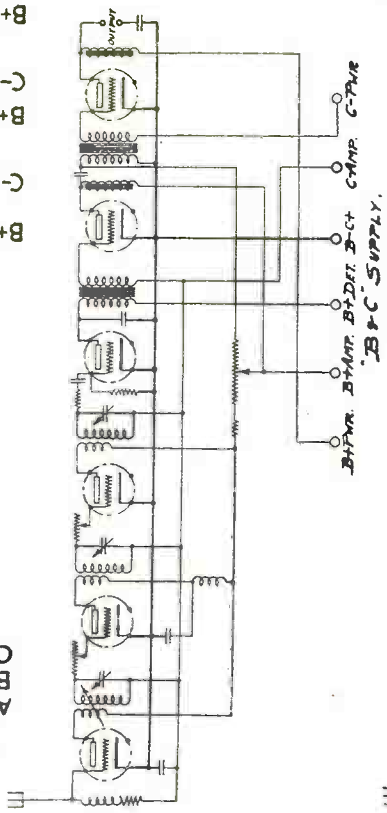

DAY-FAN 6 JUNIOR A. C. POWER SET

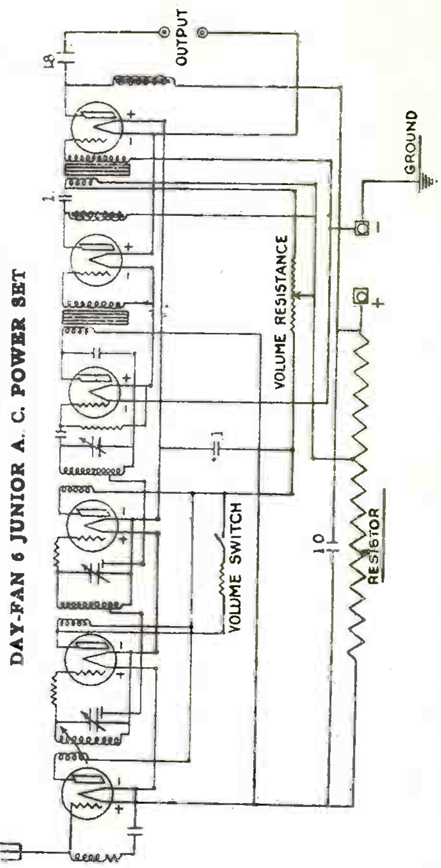

MOTOR GENERATOR SET—6 TUBE

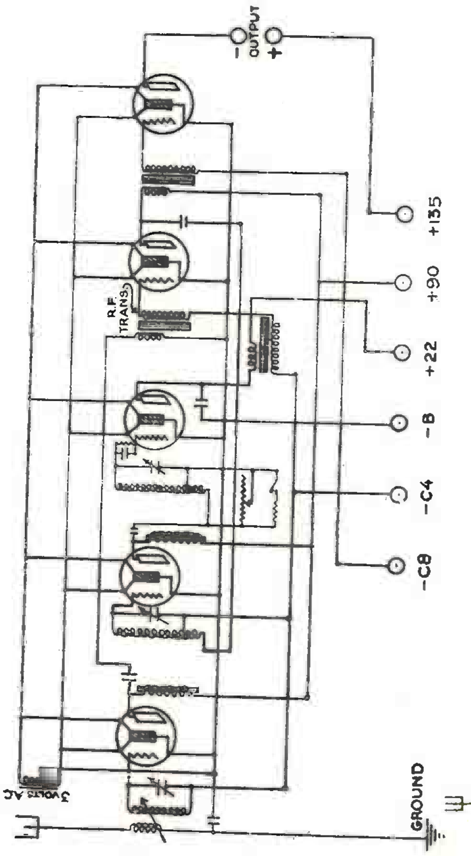

DAY-FAN 5 A. C.—5 TUBE

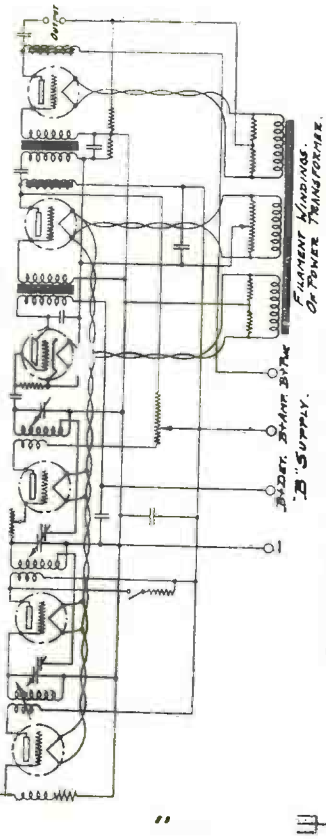

DAY-FAN 6 A. C. (R. C. A. TUBE) POWER SET

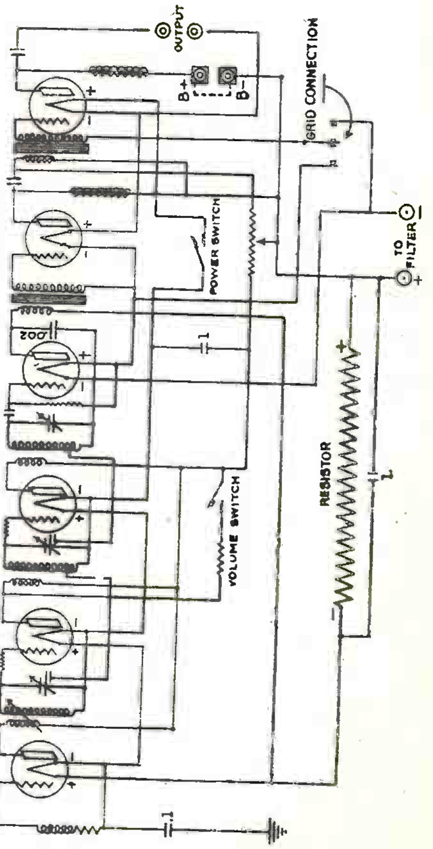

110 VOLT DIRECT CURRENT SET—6 TUBE

GENERAL MOTORS RADIO CORP.

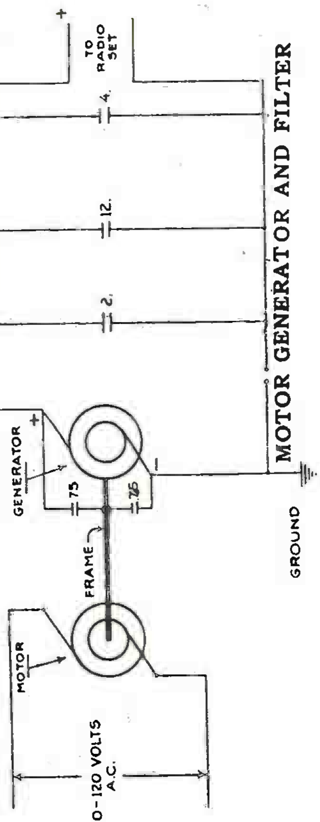

MOTOR GENERATOR AND FILTER

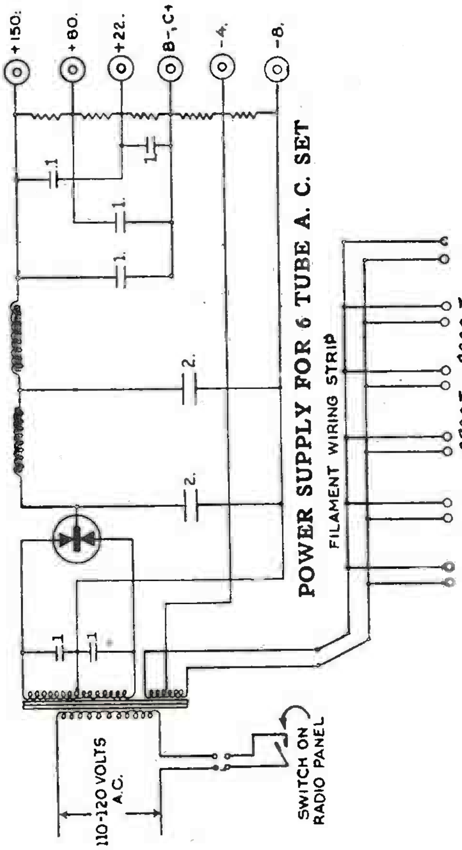

POWER SUPPLY FOR 6 TUBE A. C. SET

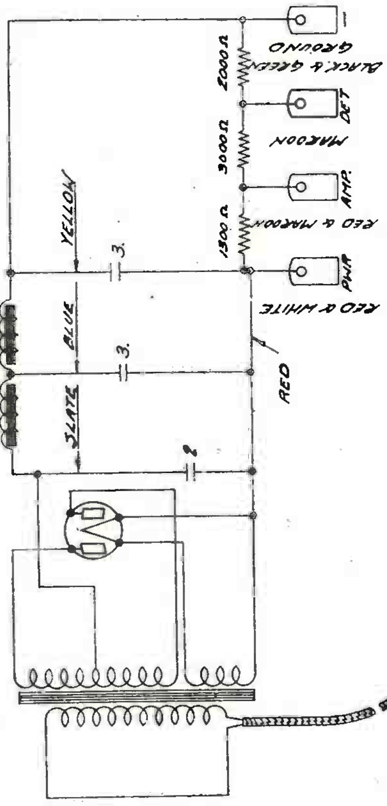

RADIO "B" POWER SUPPLY—MODEL NOS. 5524 AND 5525

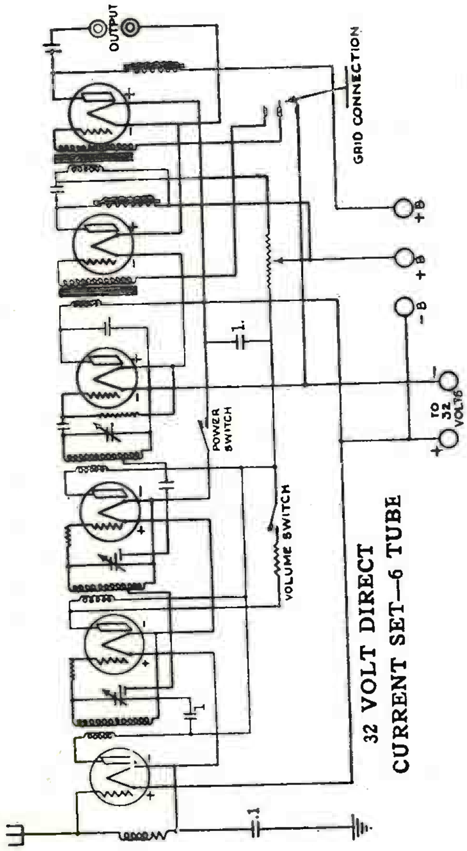

32 VOLT DIRECT CURRENT SET—6 TUBE

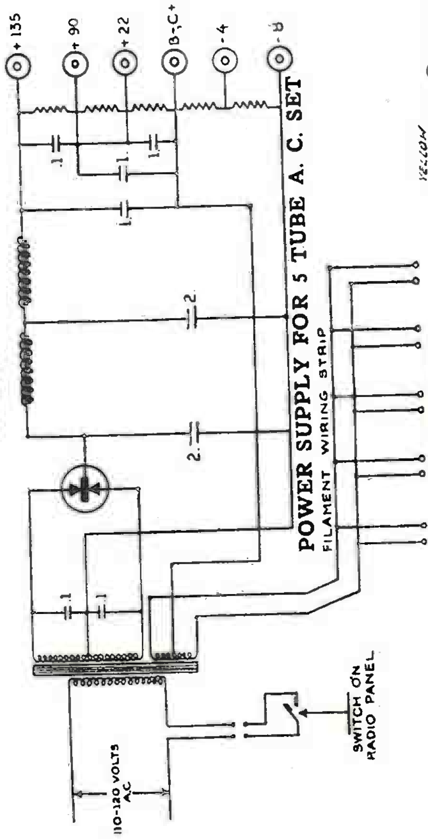

POWER SUPPLY FOR 5 TUBE A. C. SET

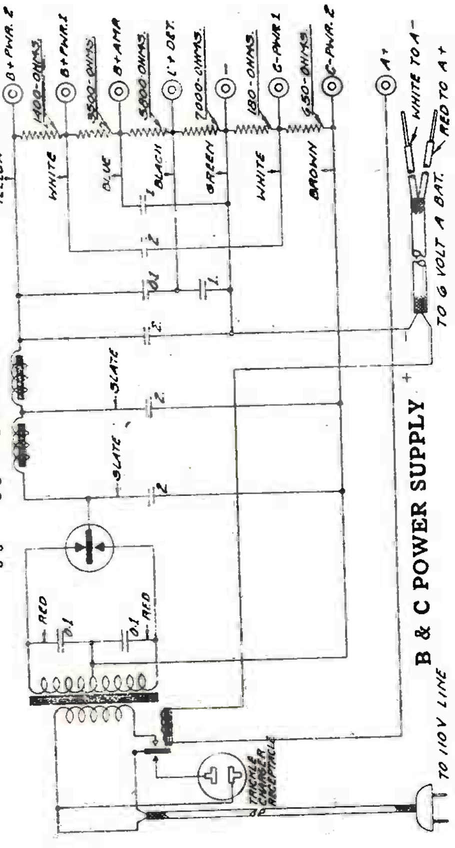

B & C POWER SUPPLY

GENERAL MOTORS RADIO CORP.

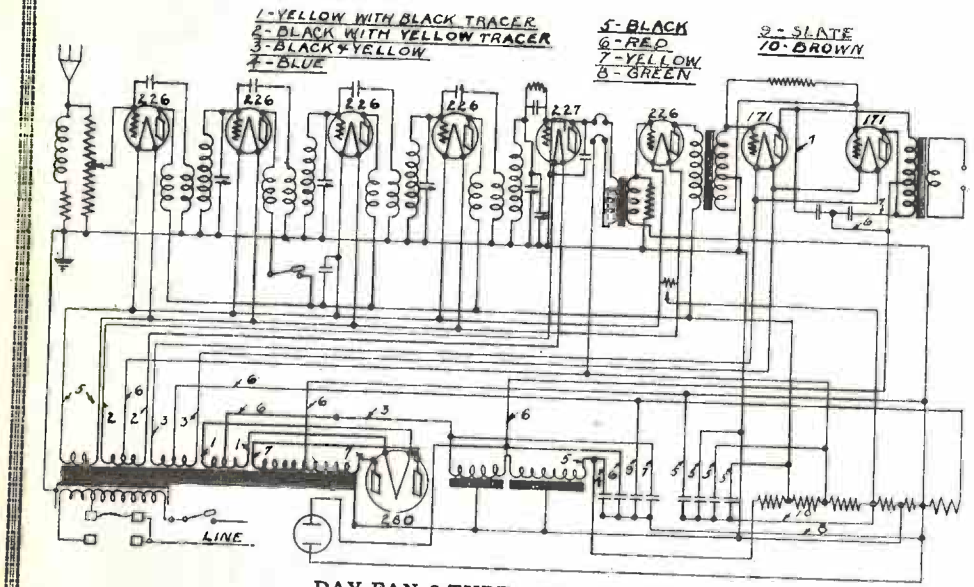

DAY-FAN 8-TUBE—MODEL 5077
(For Use with 200-Volt D. C. Dynamic Speaker)

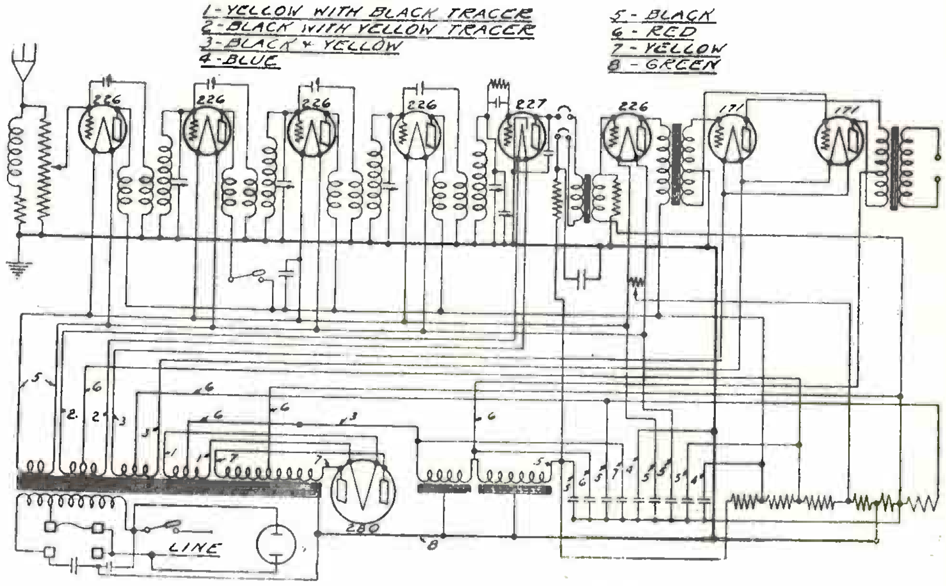

DAY-FAN 8—A. C. POWER SET

Note—Use this circuit diagram for receivers equipped with sealed power blocks, or condenser blocks not having brown nor slate colored leads.

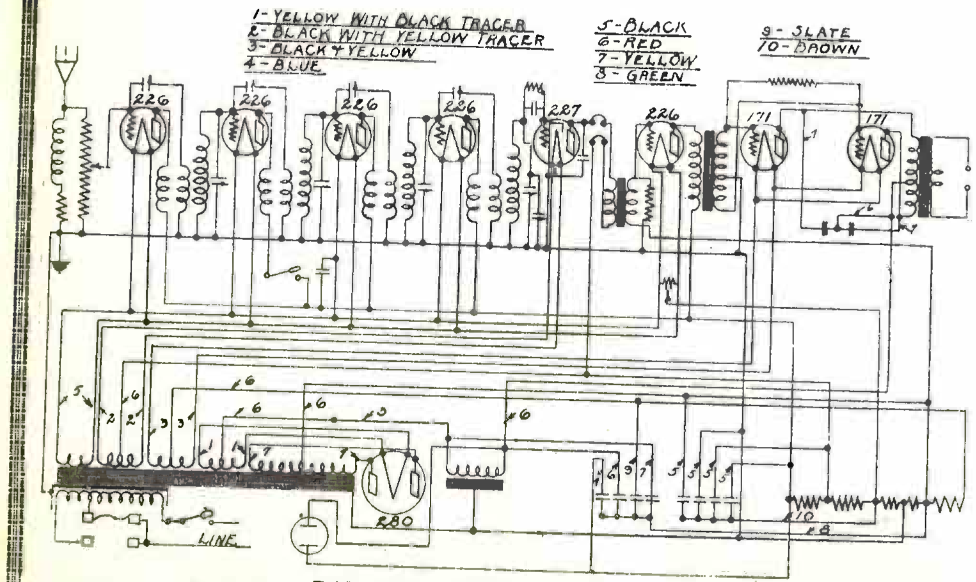

DAY-FAN 8-TUBE—MODEL 5080
(For Use with 110-Volt D. C. Dynamic Speaker)

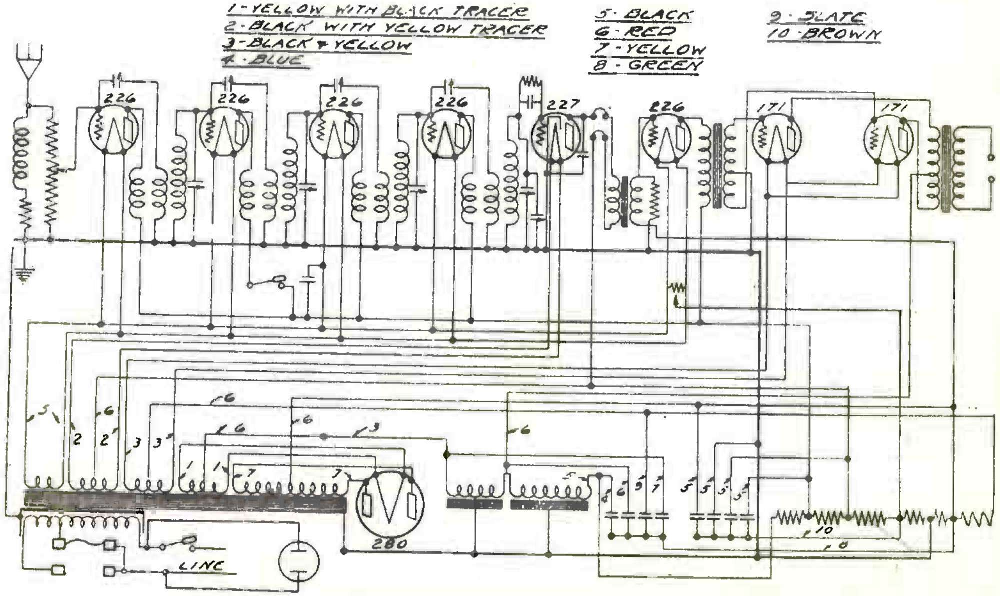

DAY-FAN 8—A. C. POWER SET

Note—Use this circuit diagram for receiver equipped with power blocks having removable covers, or condenser blocks having one brown and one slate colored lead in addition to those used for circuit shown on page 4 Sec. 6.

GENERAL MOTORS RADIO CORP.

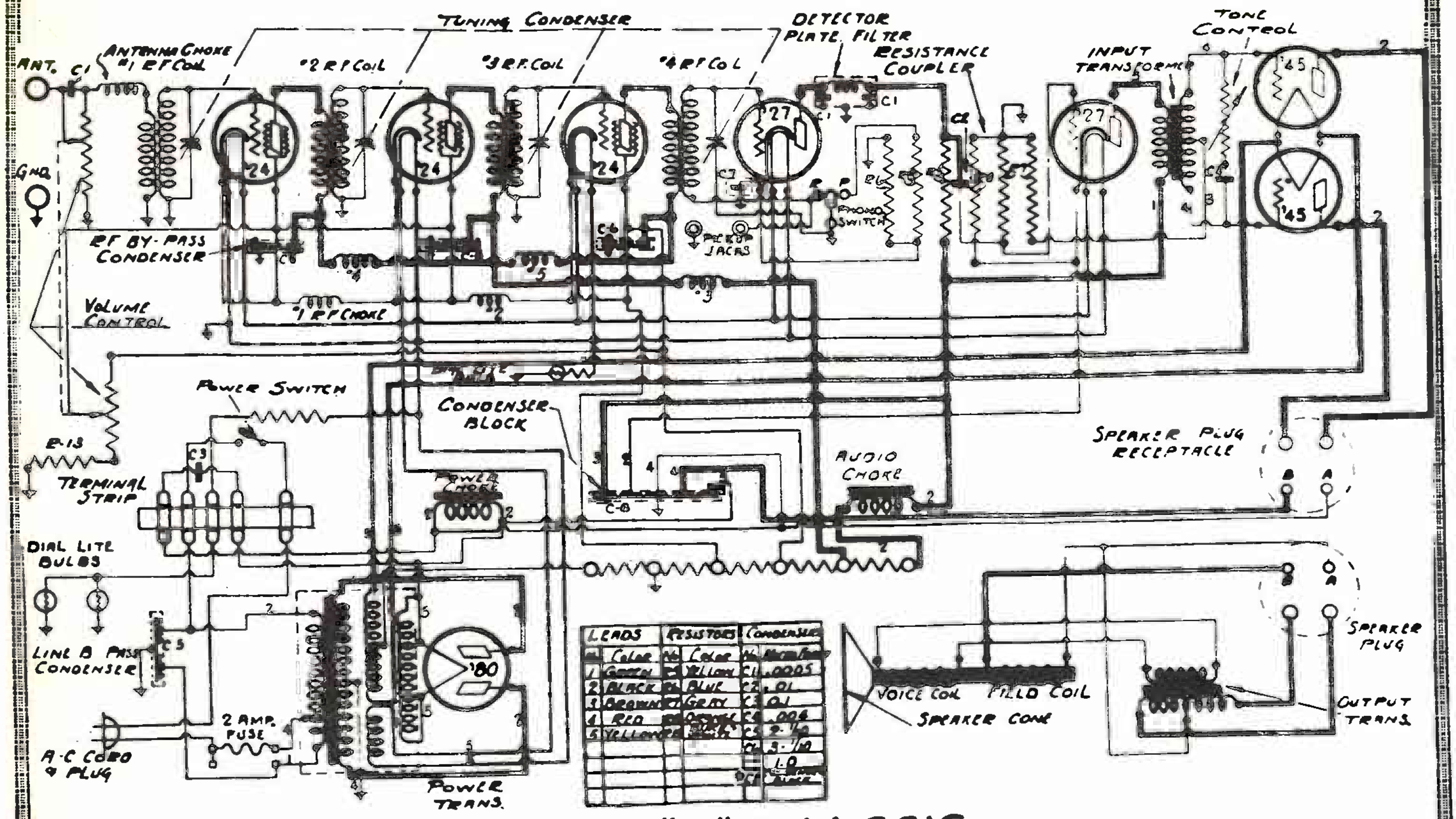

LEADS		RESISTORS		CONDENSERS	
No.	Color	No.	Color	No.	Microfarads
1	Green	[illegible]	Yellow	C1	.0005
2	Black	[illegible]	Blue	C2	.01
3	Brown	[illegible]	Gray	C3	.01
4	Red	[illegible]	Orange	C4	.004
5	Yellow	[illegible]	[illegible]	C5	2-½
				C6	3-½
					1.0
				C8	Block

MODEL "A" CHASSIS

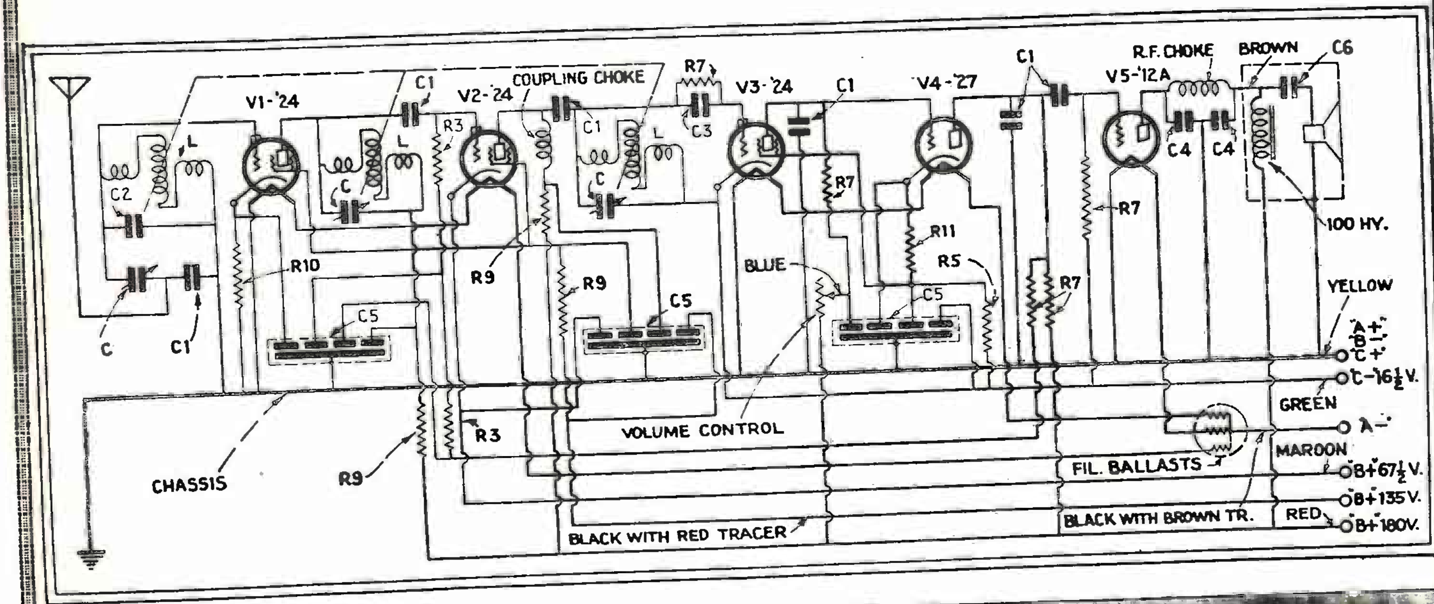

(above)
The circuit of the Delco automotive receiver. The variometer tuning arrangement and other novelties are obvious.

DELCO
AUTOMOTIVE RADIO

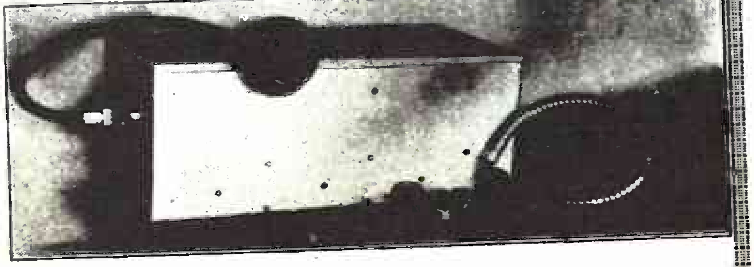

(right)
Appearance of the Delco chassis, with cables connected. The switch and volume control are seen in the foreground, separately

GILFILLAN BROS, Inc.

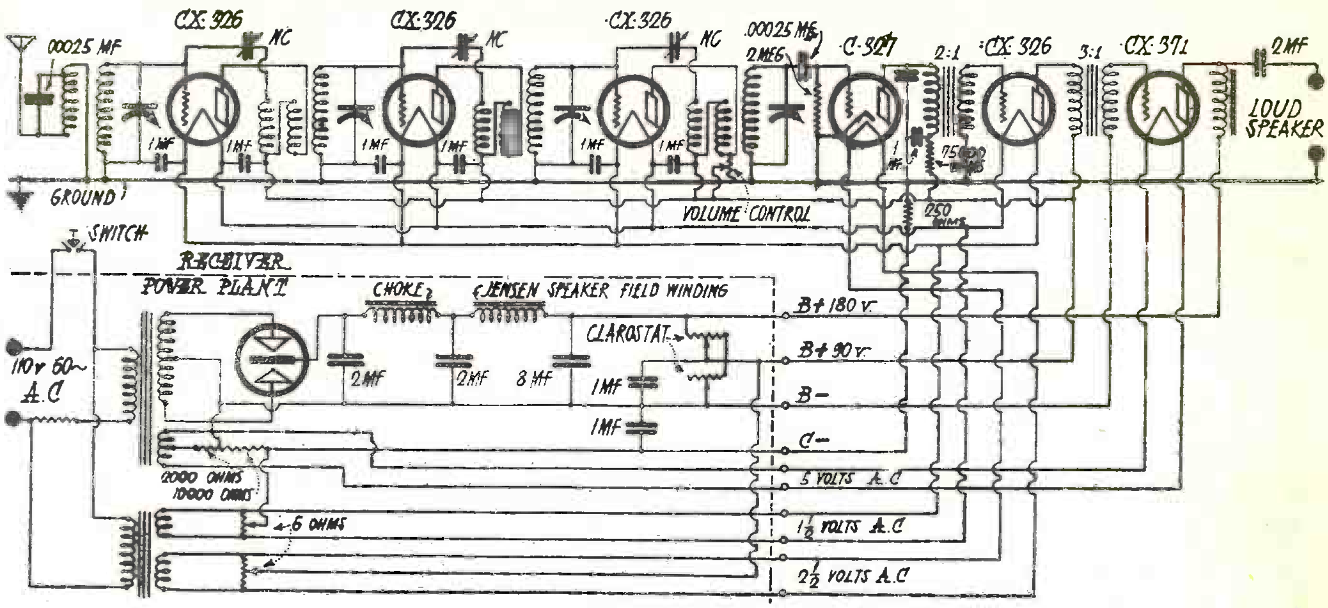

—Circuit of the Gilfillan A. C. Model 60 Receiver.

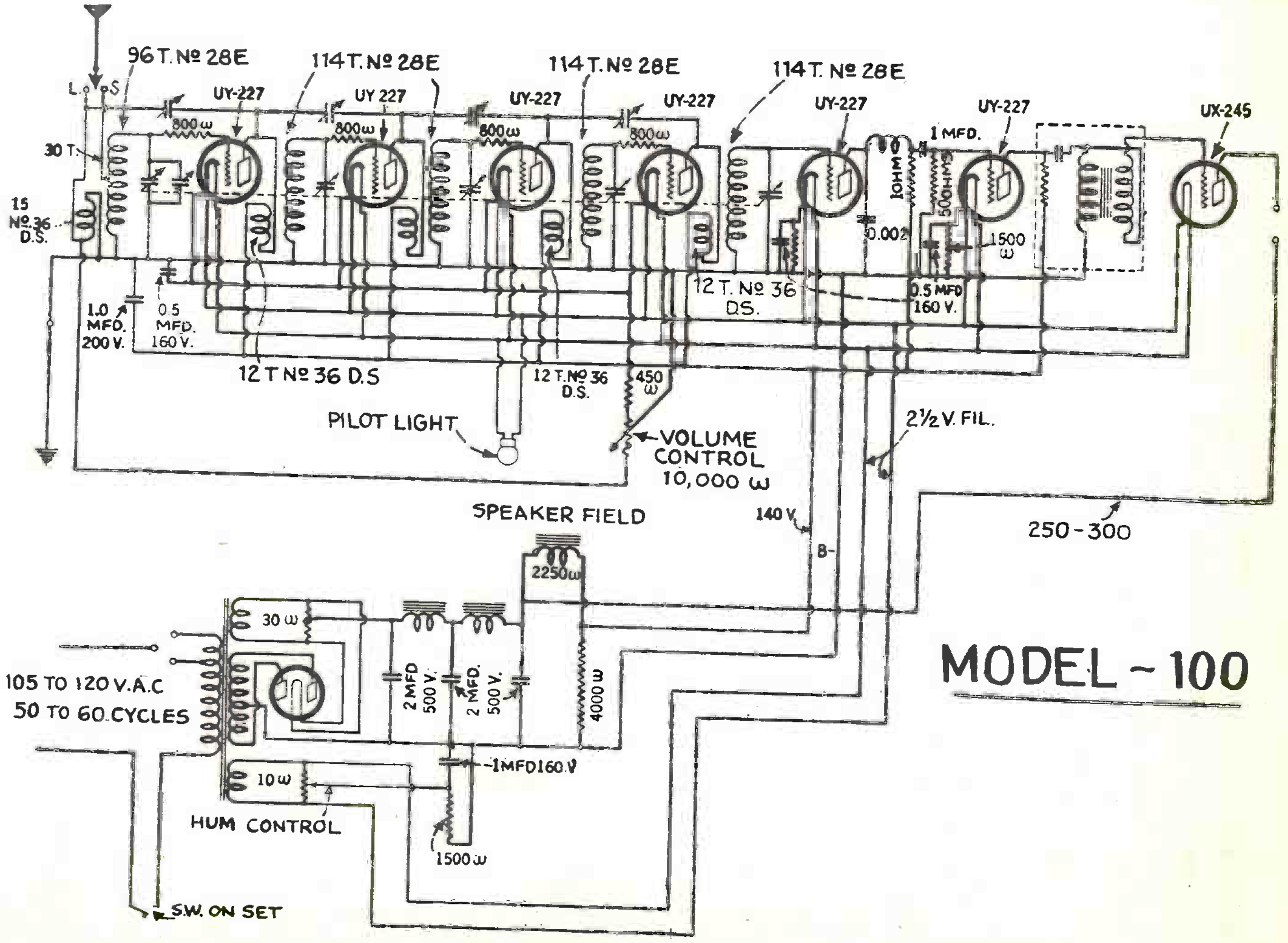

MODEL - 100

A.H. GREBE & Co.

GREBE "13" REGENERATIVE RECEIVER, 80 TO 300 M. TYPE CR-13

A. H. GREBE & CO., INC. RICHMOND HILL, N.Y.

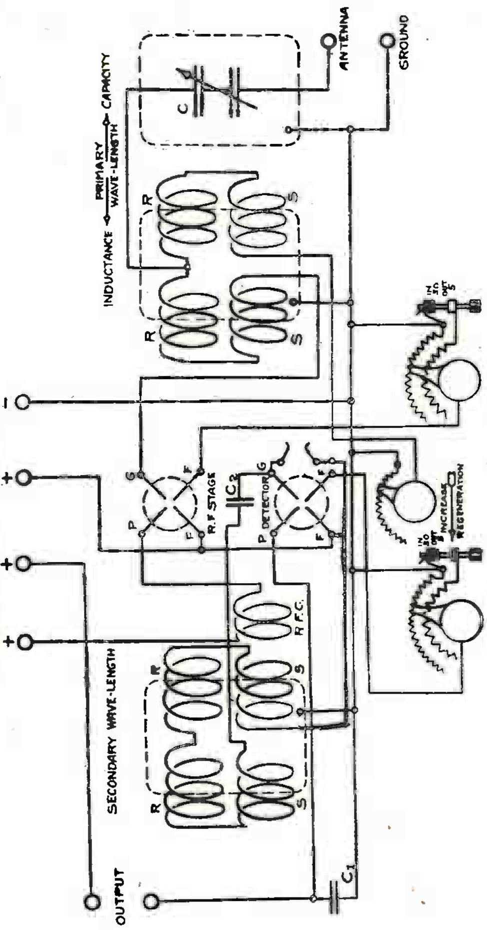

GREBE SHORT-WAVE REGENERATIVE RECEIVER, TYPE CR-6.

A. H. GREBE & CO., INC. RICHMOND HILL, N.Y.

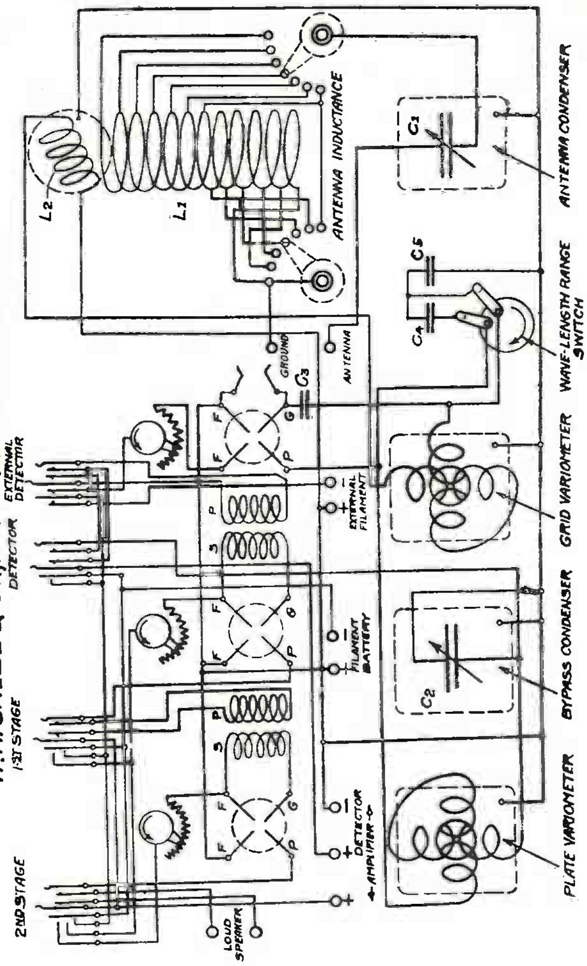

GREBE TUNED RADIO AMPLIFIER, TYPE RORN.

A. H. GREBE & CO., INC. RICHMOND HILL, N.Y.

Used with type CR-9 Receiver

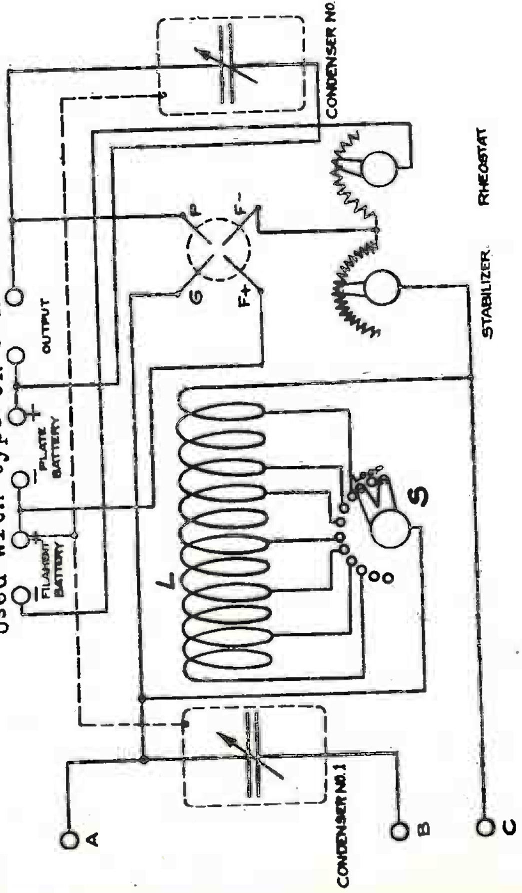

GREBE SHORT WAVE RECEIVER TYPE CR-18

A H GREBE & CO, INC. RICHMOND HILL, N.Y.

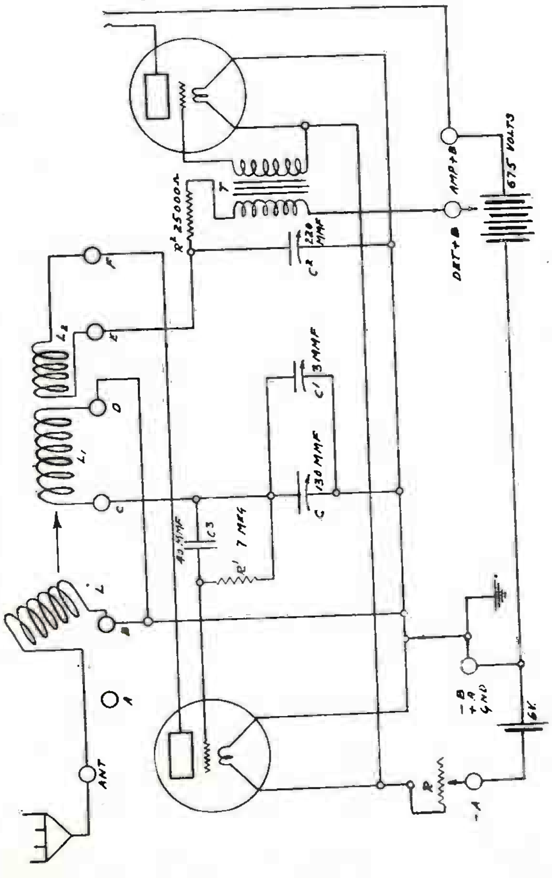

A.H. GREBE & Co.

GREBE SYNCHROPHASE RECEIVER TYPE MU-1

A.H. GREBE & CO., INC. RICHMOND HILL, N.Y.

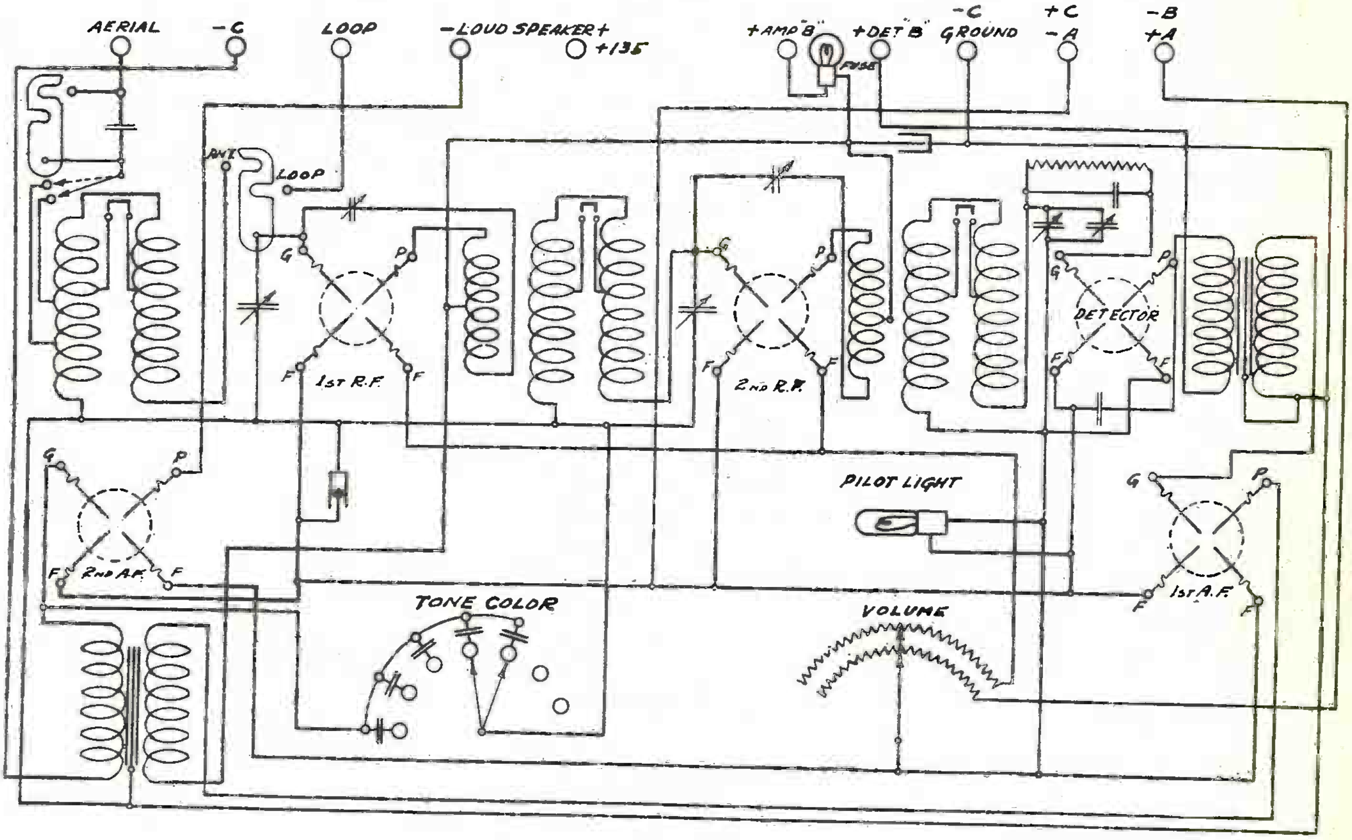

GREBE BROADCAST RECEIVER ~ 1923.

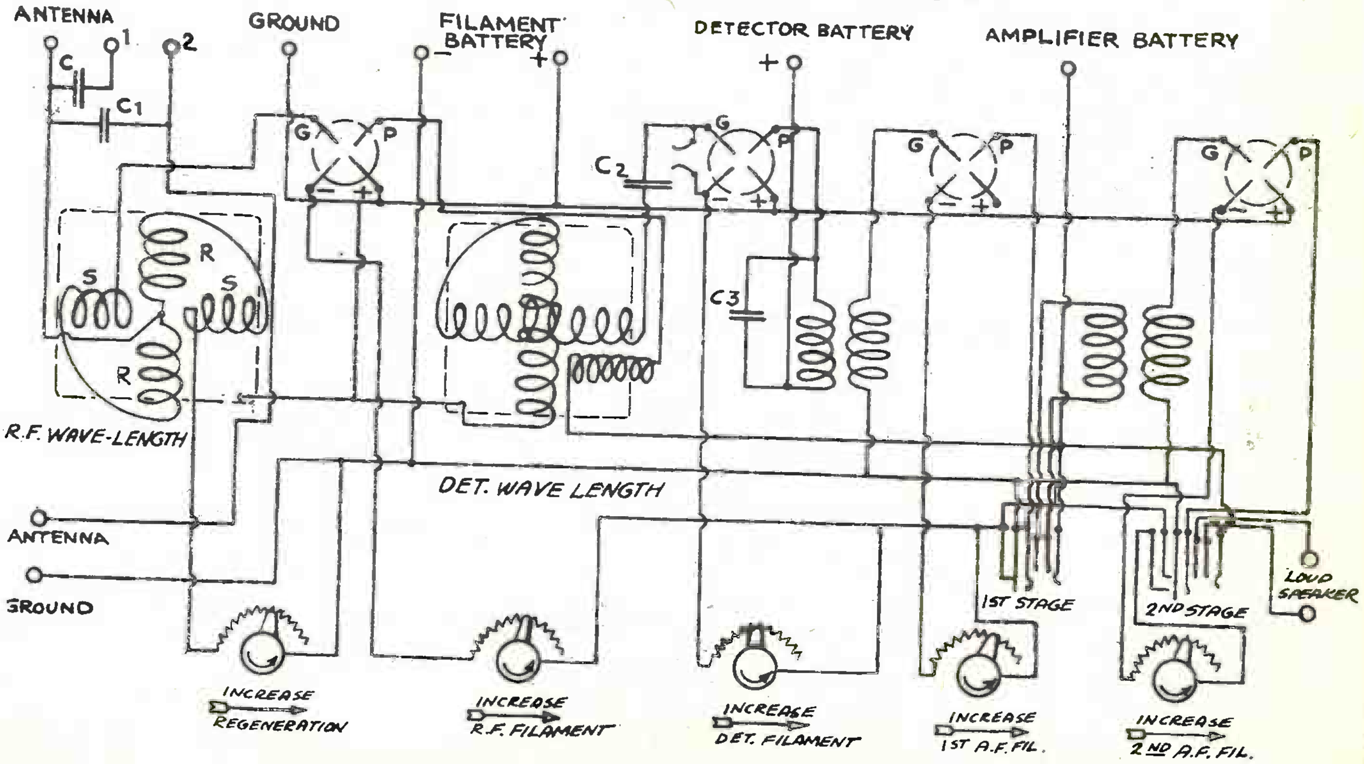

A.H. GREBE & Co.

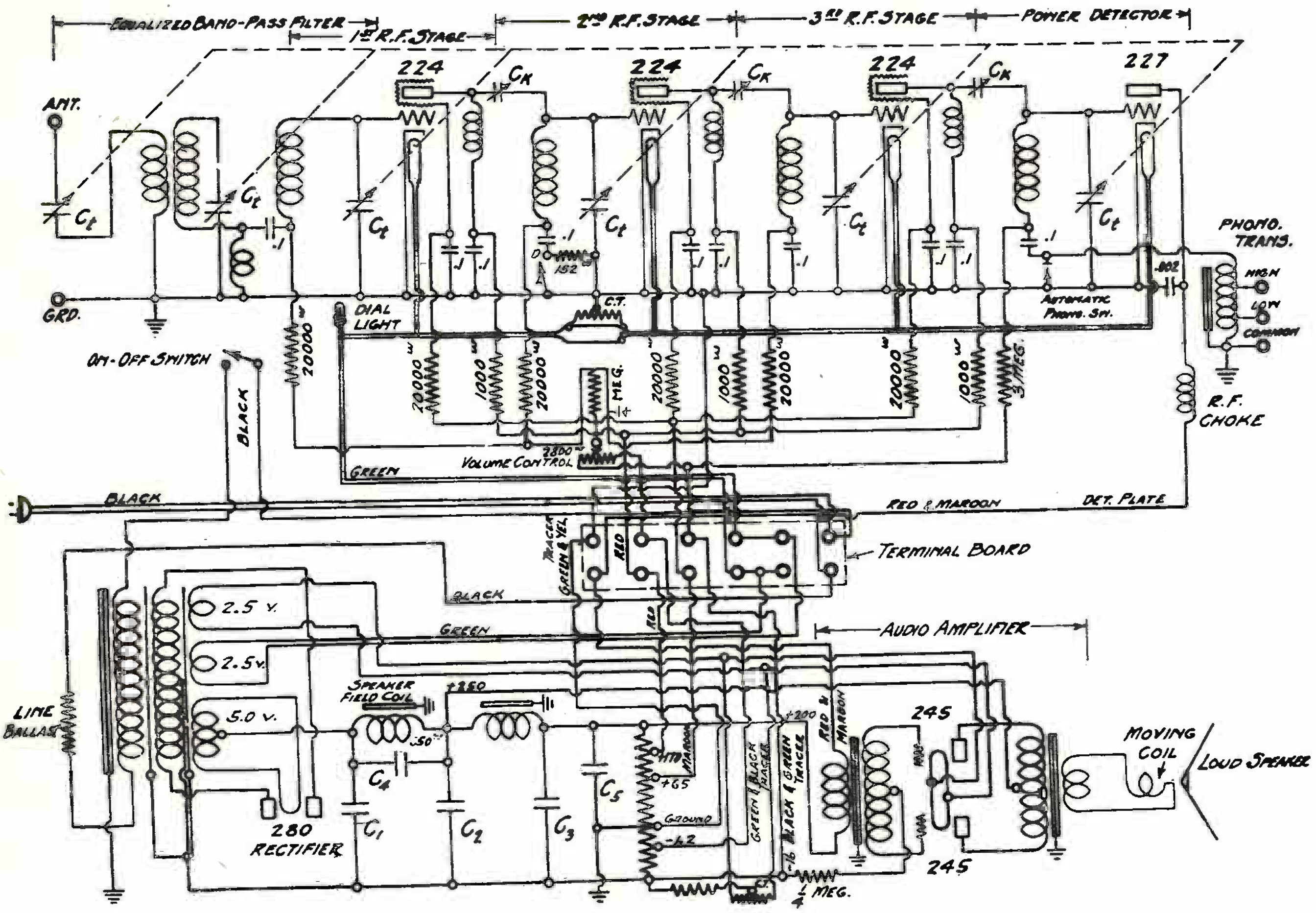

Wiring Diagram
Super Synchrophase Type SK-4

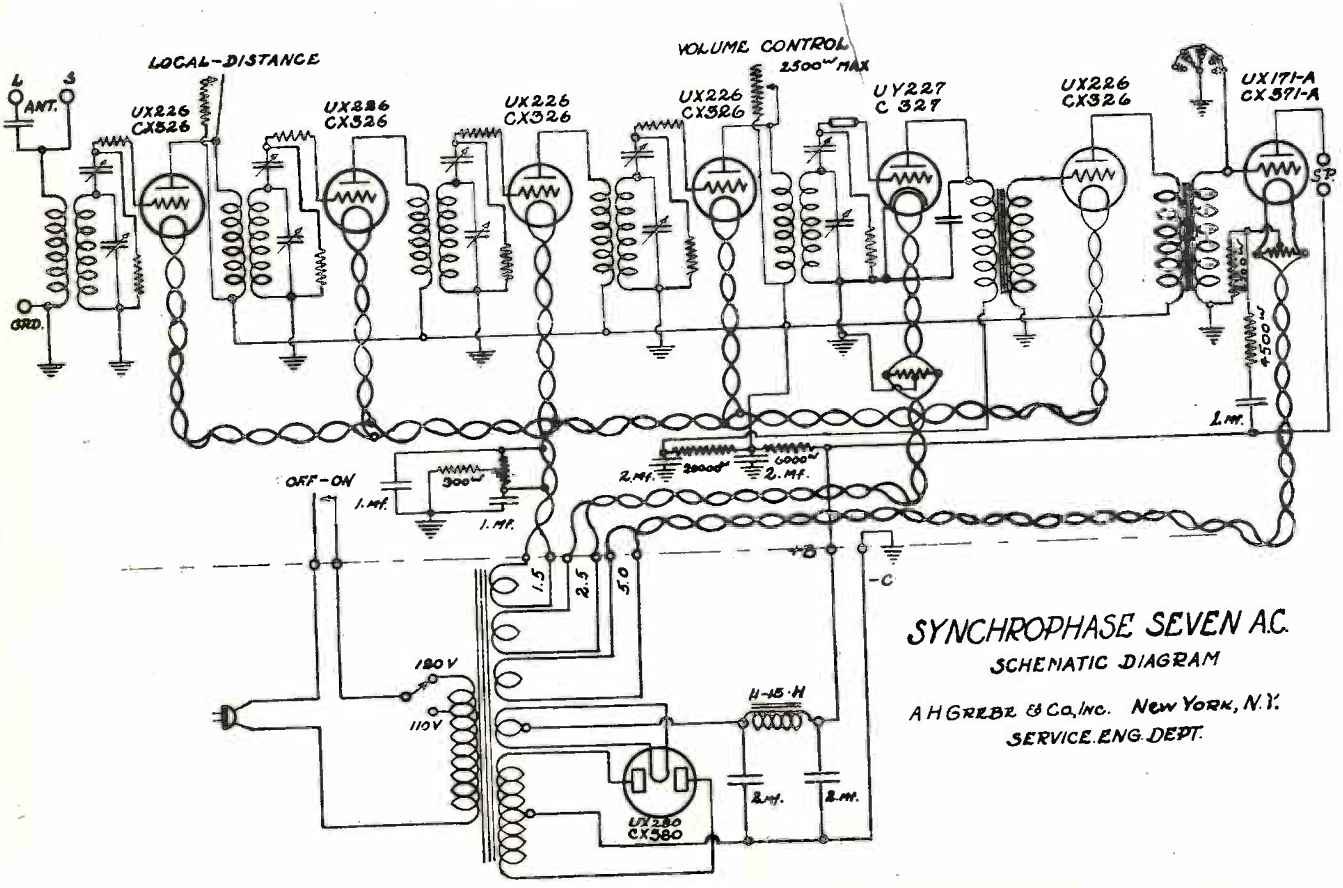

Synchrophase Seven A.C.
Schematic Diagram

A H Grebe & Co., Inc. New York, N.Y.
Service Eng. Dept.

Radio Service Data Sheets

GREBE SYNCHROPHASE—7

Several models of Grebe instruments are available under the name of "Synchrophase"; the 7-tube receiver is described and diagrammed this month. In the coupling chain controlling the left-hand dial there is play to permit condenser variation, to compensate for differences in antenna capacities. This should be about two or three degrees. Between center and right-hand dials, only one-half degree is allowed as compensation for variation in parts and tube manufacture.

Condenser C1 has a capacity of .00022-mf. Units *a, b, c, d* and *e* ("Tonecolor") have a capacity of 1750, 1450, 950, 600 and 175 mmf., respectively. Resistors R1, 2, 3, 4, are 400 ohms; X is a "dummy" cartridge having a copper wire in place of a high resistance. Resistors R5, 6, 7, 8 and 9 are 5 to 7 megohms.

* * *

CONTINUITY TEST

Beneath Aluminum Deck

Test Leads	*Correct*	*Fault, if Otherwise*
1-39	full	L1 open
1-2	none	C1 shorted
3-39	none	C14 shorted
4-39	none	C13 shorted
5-6	about 1/3	T1 sec. open
7-8	about ¾	T1 pri. open
7-39	none	T1 pri. grounded
5-39	none	T1 sec. grounded
5-7	none	T1 pri. short to sec.
9-10	about 1/3	T2 sec. open
11-12	about ¾	T2 pri. open
11-39	none	T2 pri. grounded
9-39	none	T2 sec. grounded
9-11	none	T1 pri. short to sec.

Test of Cable Leads

39-"180v."	none	Lead grounded
13-"180v."	full	Lead open
39-"90v."	none	Lead or R.F. pri. grounded.
14, 15, 16, 17, in turn, to "90 v."	full	Open pri, in respective R.F.T.
39-"Det."	none	Lead grounded
40-"Det."	about ¾	Lead or T1 pri. open
18-"Det."	none	Shorted C7
39-"C+"	full	"B—" open
39-"C4½"	none	"C4½" grounded
41-"90v."	about ¾	Lead or T2 pri. open
19-"C4½"	about 1/3	Lead or T1 sec. open
39-"C40"	none	"C40" grounded
20-40v.	about 1/3	T2 sec., or lead open
20-39 (rotate "Tonecolor")	none	"Tonecolor" grounded
39-"A—"	full	Lead open
21, 22, 23, 24, 25, 26, 27, respectively, to "A—"	full	"A" circuit open
42, 43, 44, 45, 46 to "A—"	full	L2, L4, L6, L8 or L10, respectively, open
39—"A+"	none	Lead grounded
28—"A+" (rotate rheostat)	full	Rheostat or contact bad
29—"A+"	full	As above

Inside Receiver

C8, C9, C10, C11, C12, to 30, 31, 32, 33, 34, respectively	none	Shorted C2, C3, C4, C5, C6, respectively
30-35	Almost full	R1 open
31-36	Almost full	R2 open
32-37	Almost full	R3 open
33-38	Almost full	R4 open

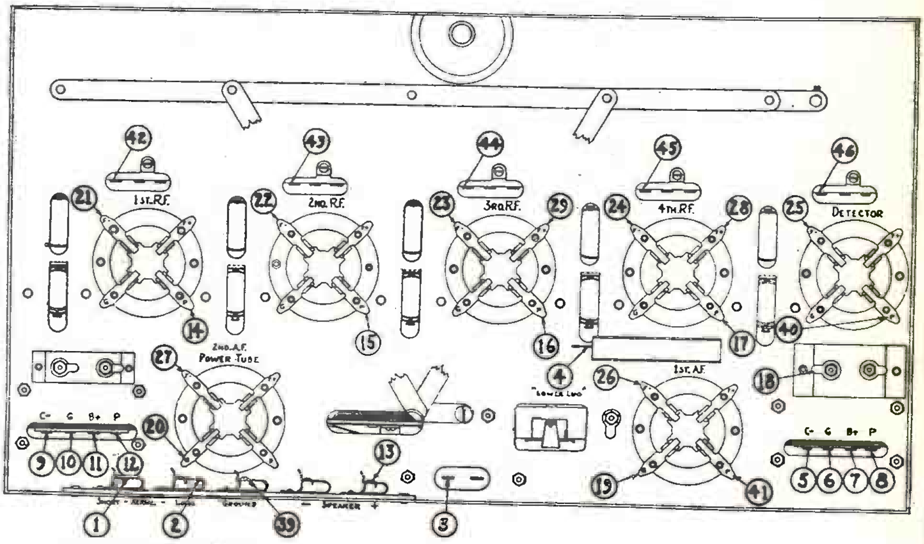

BOTTOM VIEW: Set turned on its back, bottom panel facing operator.

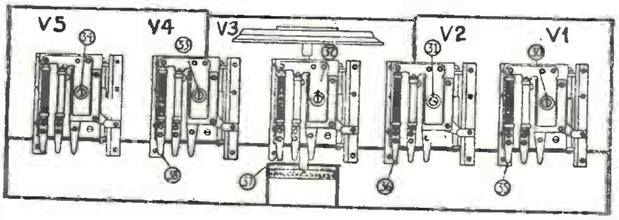

The heavy black bar at the left of the unit marked V5 is the dummy bus referred to in these columns. Each block comprises a coupling condenser, grid leak, and grid suppressor.

* * *

In any receiver it may occur that an audio transformer primary open-circuits. The service man may conveniently apply to T1 and T2 the same test used in production. Referring to bottom view of chassis, the north-seeking pole of a compass placed over 5-6-7-8 or 9-10-11-12 should point to the right (with plate current flowing). Both primaries and secondaries may be tested through use of the current in the average continuity-test kit; provided the polarity of the prods is known. With "plus" test lead to 7 or 11 and "minus" lead to 8 or 12, the compass should swing to the right; and also to the right when "+" lead of prod is connected to 6 or 10 and "—" to 5 or 9.

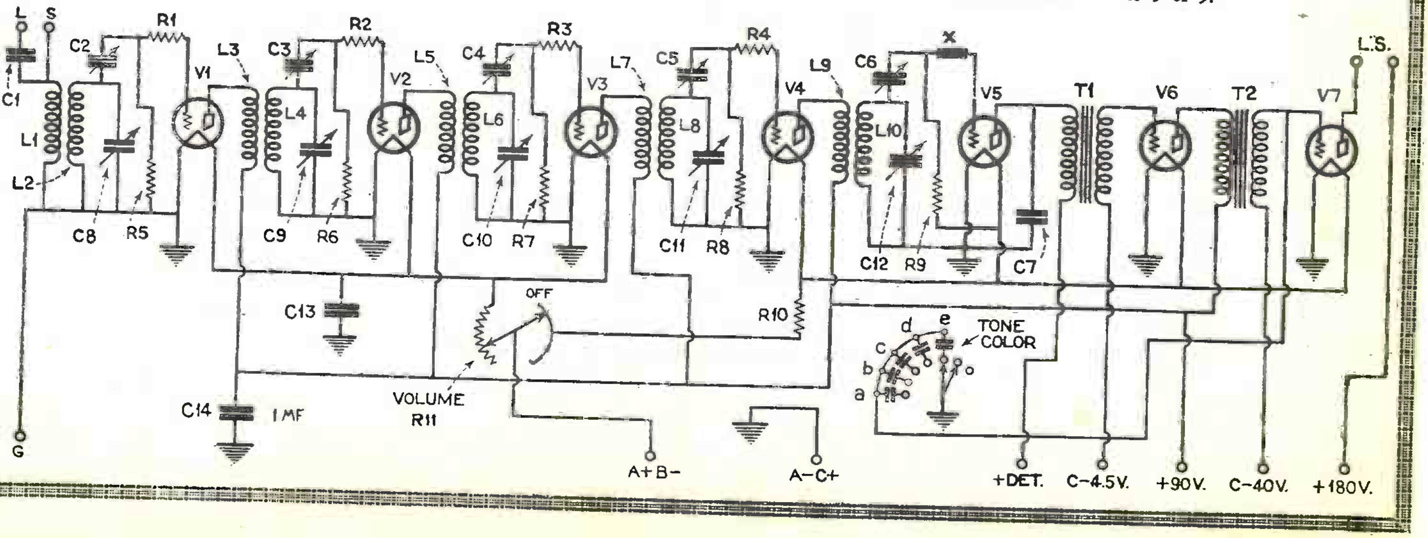

GRIGSBY-GRUNOW CO.

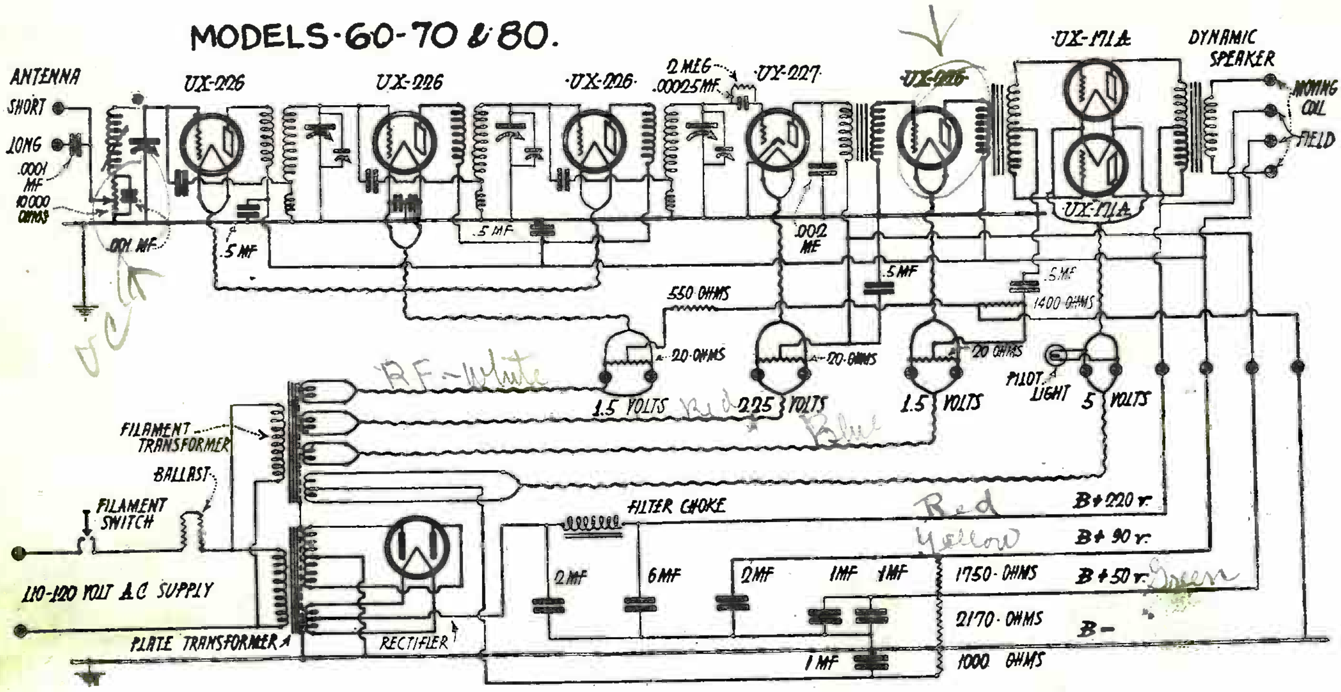

NOTE: In some models of the "70," the center-tap of the detector filament connects to the center-tap of the R.F. tube filaments, and the detector plate potential is then only about 30 volts.

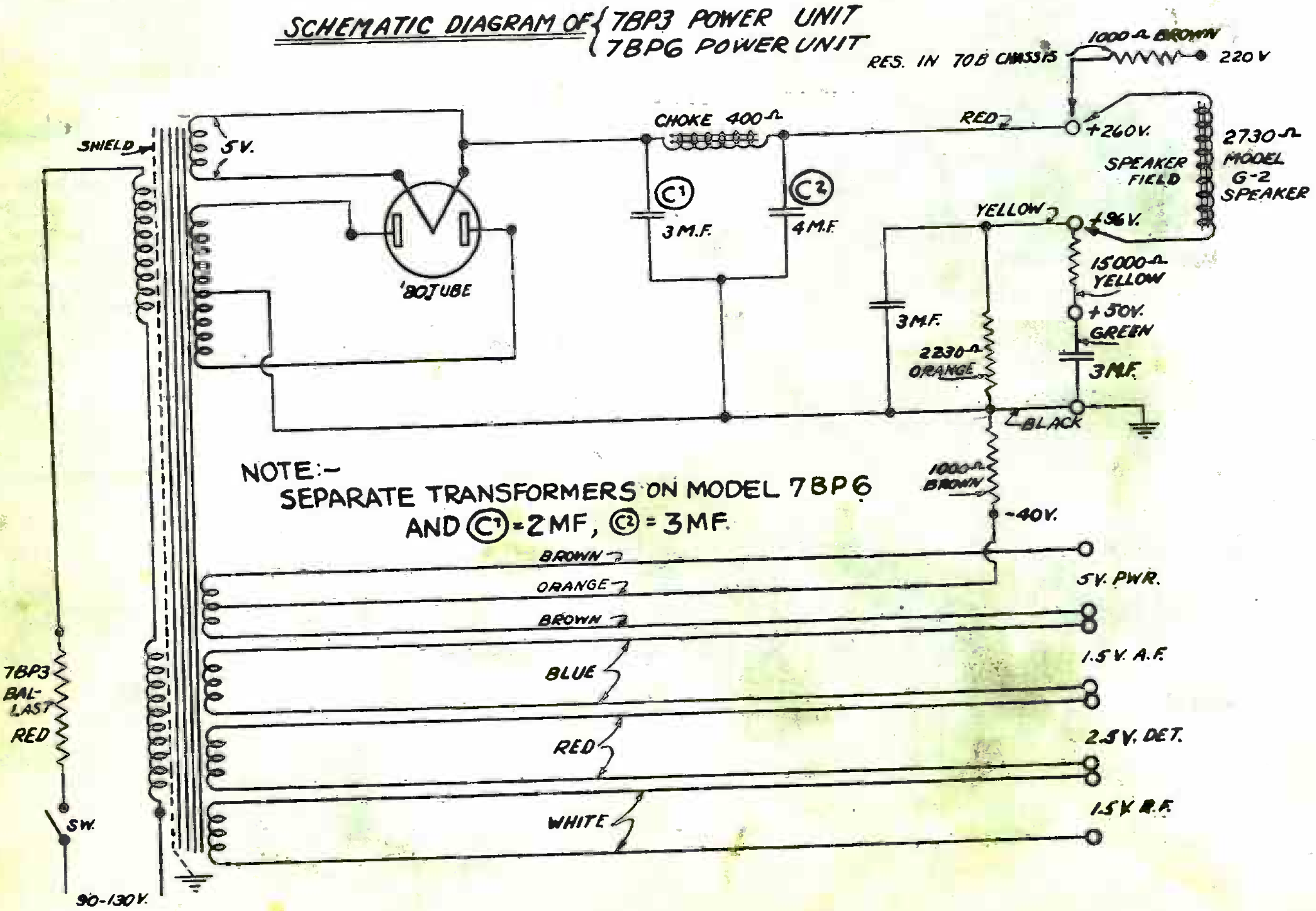
SCHEMATIC DIAGRAM OF { 7BP3 POWER UNIT / 7BP6 POWER UNIT

NOTE:-
SEPARATE TRANSFORMERS ON MODEL 7BP6
AND Ⓒ1 = 2MF, Ⓒ2 = 3MF

GRIGSBY-GRUNOW CO.

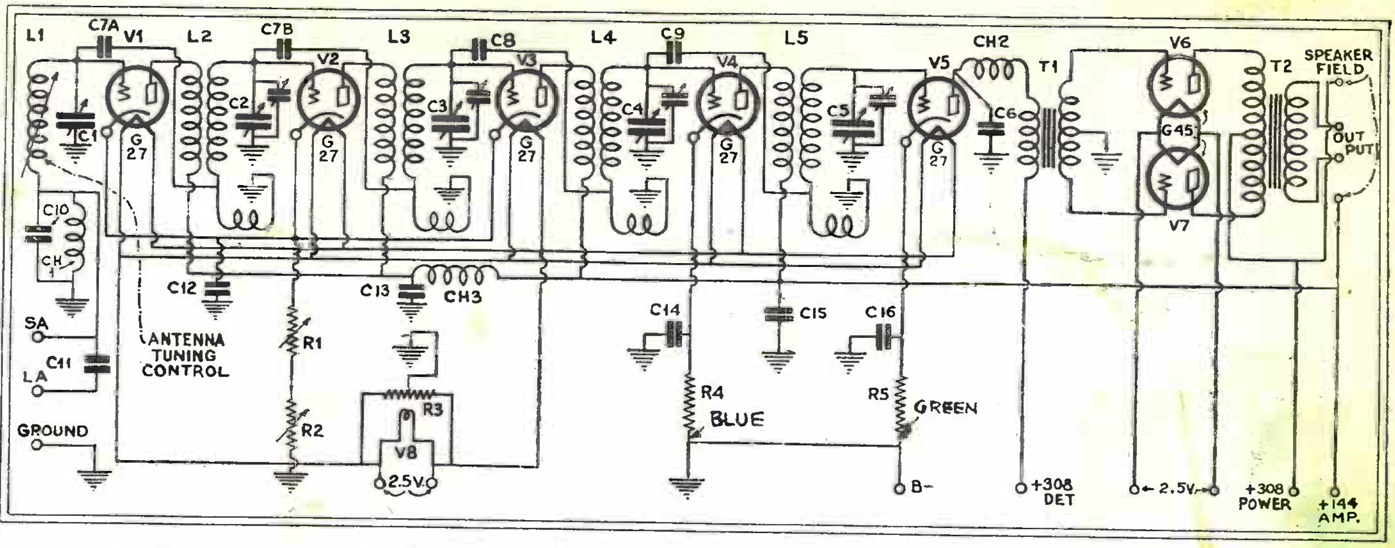

Schematic circuit of the Majestic "Model 90" receiver chassis Several circuit innovations are to be noted; such as the variometer tuning of L1, and the use of four tuned, neutralized R. F. stages.

MODEL~90

The constants are as follows: V1, V2, V3, V4, V5, type '27 tubes; V6, V7, '45s; V8, 3-volt pilot lamp; R1, 75,000 ohms, variable (volume control); R2, adjustable resistor, 500 to 2500 ohms; R3, non-inductive, center-tapped, 1.6 ohms total; R4, 1800 ohms (blue); R5, 35,000 ohms (green); C6, .004-mf.; C10, .001-mf.; C11, .0001-mf.; C12, C13, C14, C15, 0.5-mf.; C16, 1.0-mf. Ch1, Ch2 and Ch3 are R.F. chokes.

Volume is controlled by varying the grid bias of V1, V2, V3.

The voltage readings for this set should be as follows: filaments of V1, V2, V3, V4, V5, 2.35; of V6, V7, 2.45; plates of V1, V2, V3, V4, 130; of V5, 270; of V6, V7, 250; grid biases of V1, V2, V3, .8 volts; V4, 9 volts; V5, 30; V6 and V7, 50. The plate current of V1, V2, V3 is 5.5 milliamperes; V4, 5 ma.; V5, 1 ma.; V6, V7, 32 ma. These readings are exact only when the receiver is tuned to 550 kc., the volume control is set at maximum, and the line potential is 115 volts A.C.

R2 is secured to, and rotated by, the gang condenser shaft. It varies the grid bias of V1, V2 and V3 from 9 to 32 volts. This serves automatically to maintain even amplification throughout the tuning range. (This equalizer should have a resistance of 500 ohms at 550 kc., 1,500 ohms at 1,000 kc., and 2,500 ohms at 1,500 kc.)

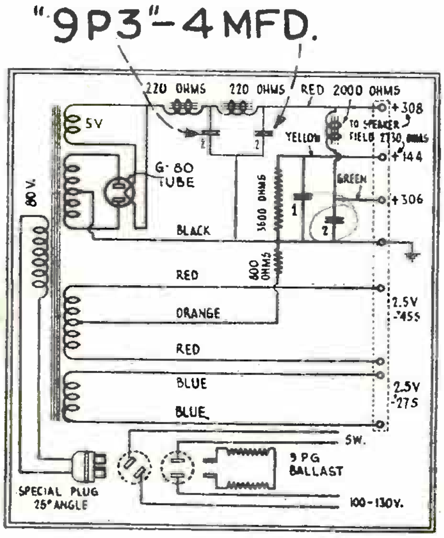

MAJESTIC "9P6" CONDENSER PACK FOR MODEL 90 RECEIVER~

WHEN testing the power pack in the Majestic "9P6," for shorts in the condenser bank, a reading will be obtained (in the earlier models) between the second and the fifth taps. This is due to a choke coil, which is mounted inside the condenser can, and connected between these two taps.

In the later models, this choke has been replaced by a resistor. In case of an open in this choke or resistor, there will be no plate voltage at the detector tap.

The schematic circuit of the earlier Majestic "9P6" power pack, showing the choke between detector and power-amplifier tap.

MODEL 70-B CHASSIS IN 72 RECEIVER~

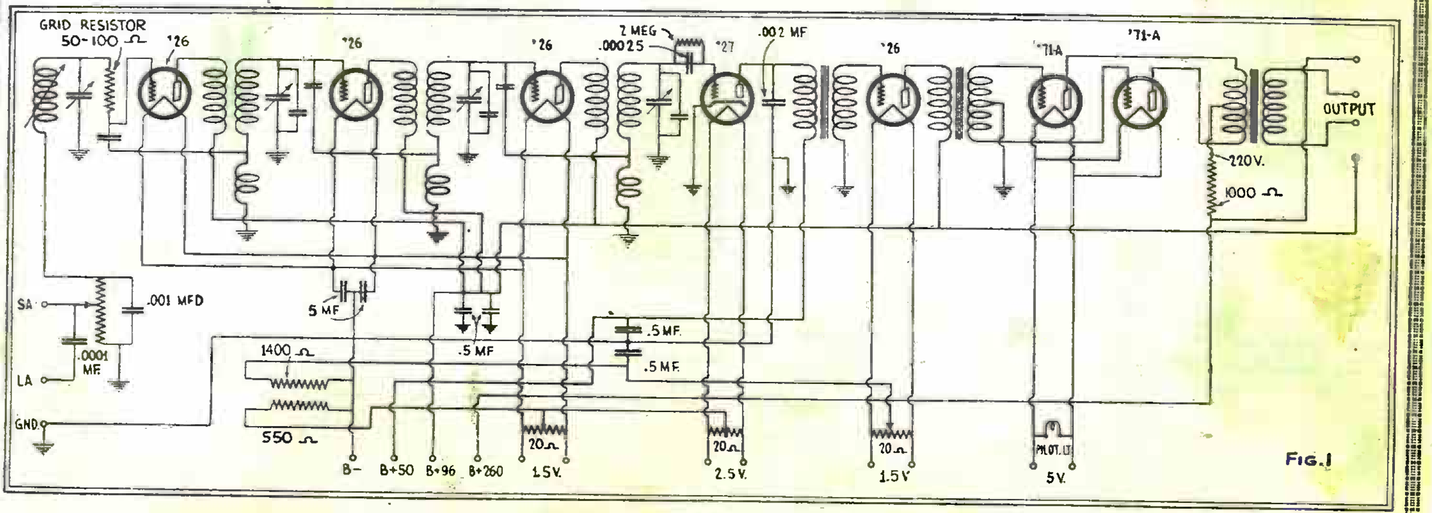

FIG. 1

Schematic circuit of the Majestic 70-B chassis used in the model 72 receiver. In contrast with most neutrodyne arrangements it is noticed that the neutralizing potential is obtained from the grid circuit; the coil being part of the tuned secondary circuit. The service man must remember this important point should occasion arise for servicing one of these modern radio sets. *Two* adjustable 20-ohm "hum balancers" are used in this set.

GRIGSBY-GRUNOW CO.

SCHEMATIC DIAGRAM FOR MODEL 100 MAJESTIC RECEIVER

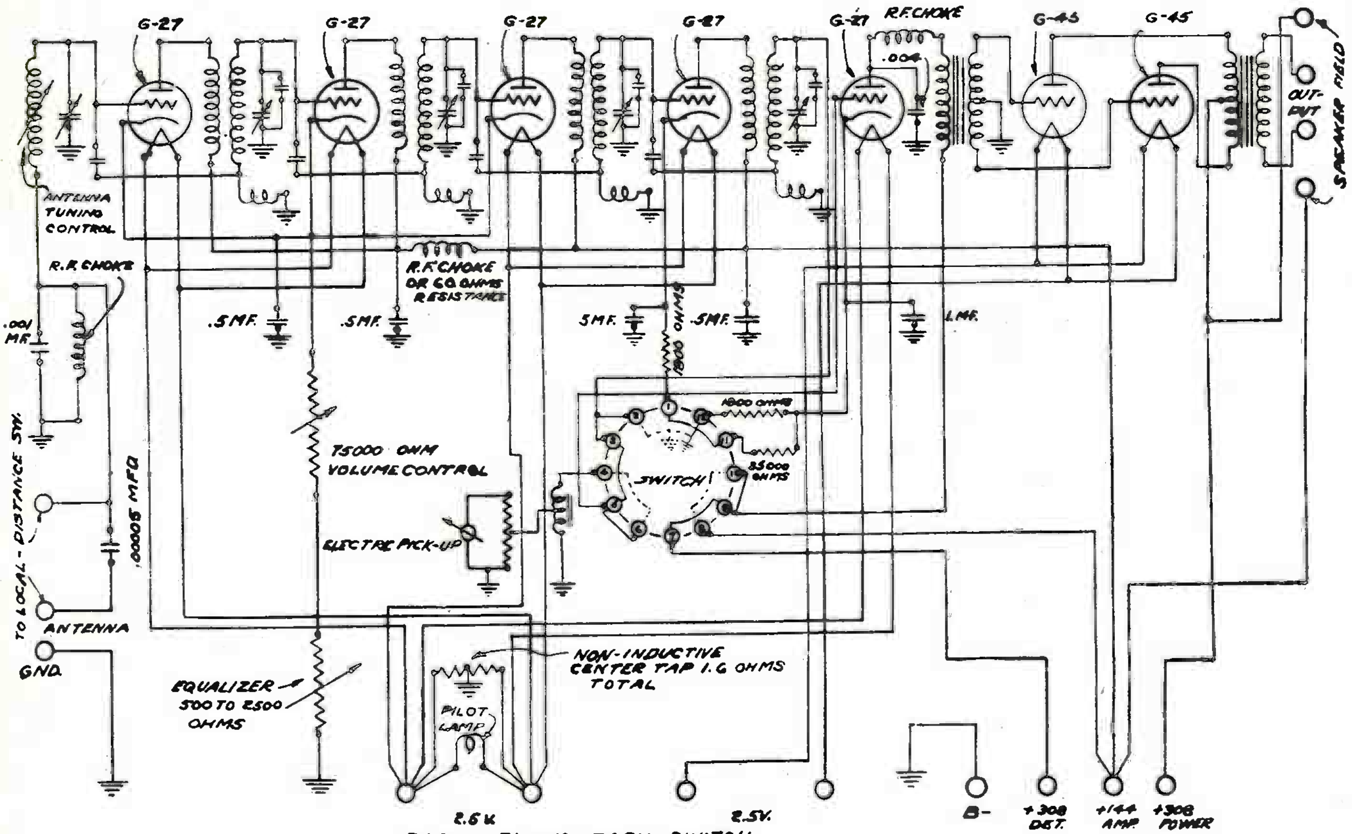

RADIO-PHONOGRAPH SWITCH
FULL LINE INDICATES RADIO POSITION
DOTTED LINE INDICATES PHONOGRAPH POSITION

SCHEMATIC DIAGRAM FOR MODEL 90-B MAJESTIC CHASSIS

25-40 AND 50-60 CYCLE

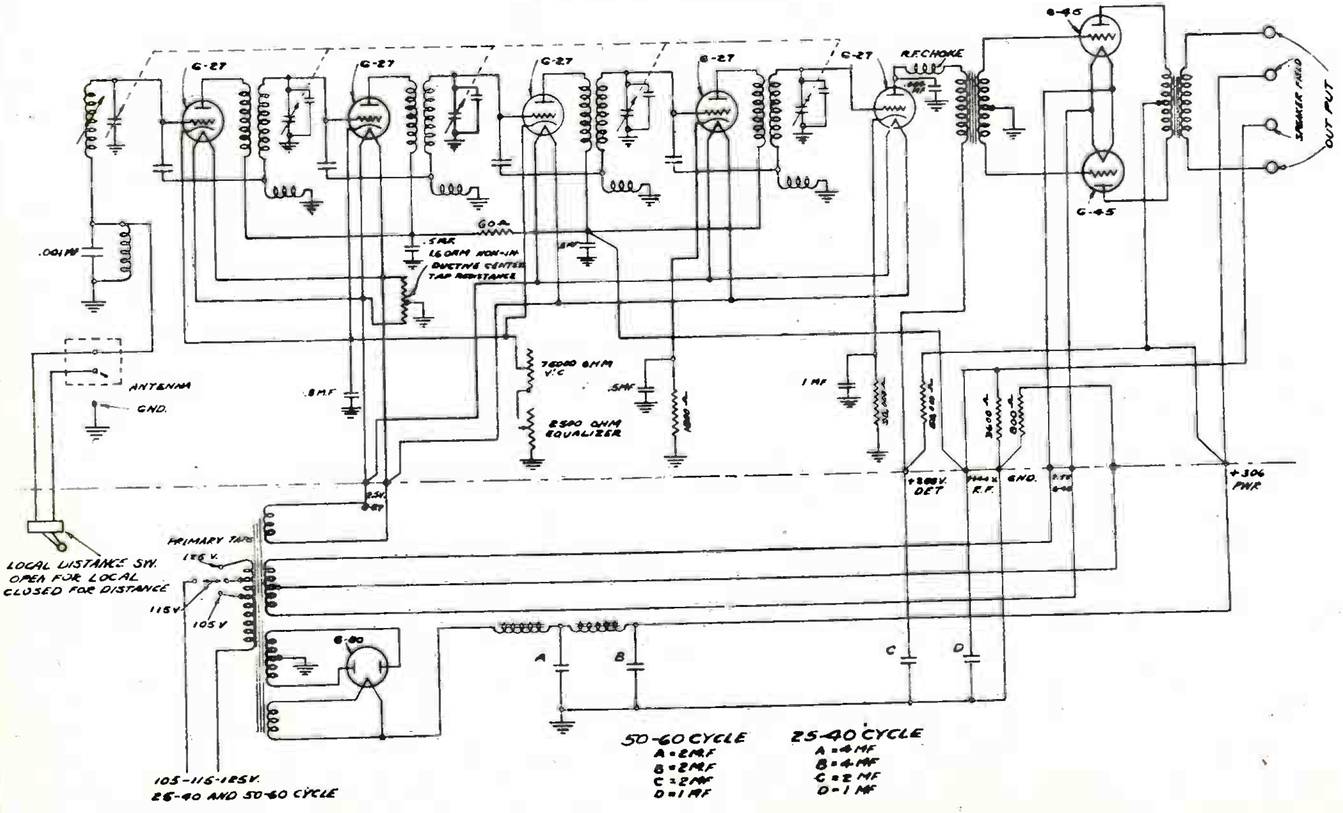

GRIGSBY-GRUNOW CO.

SCHEMATIC DIAGRAM FOR MODEL 100-B MAJESTIC CHASSIS

25-40 AND 50-60 CYCLE

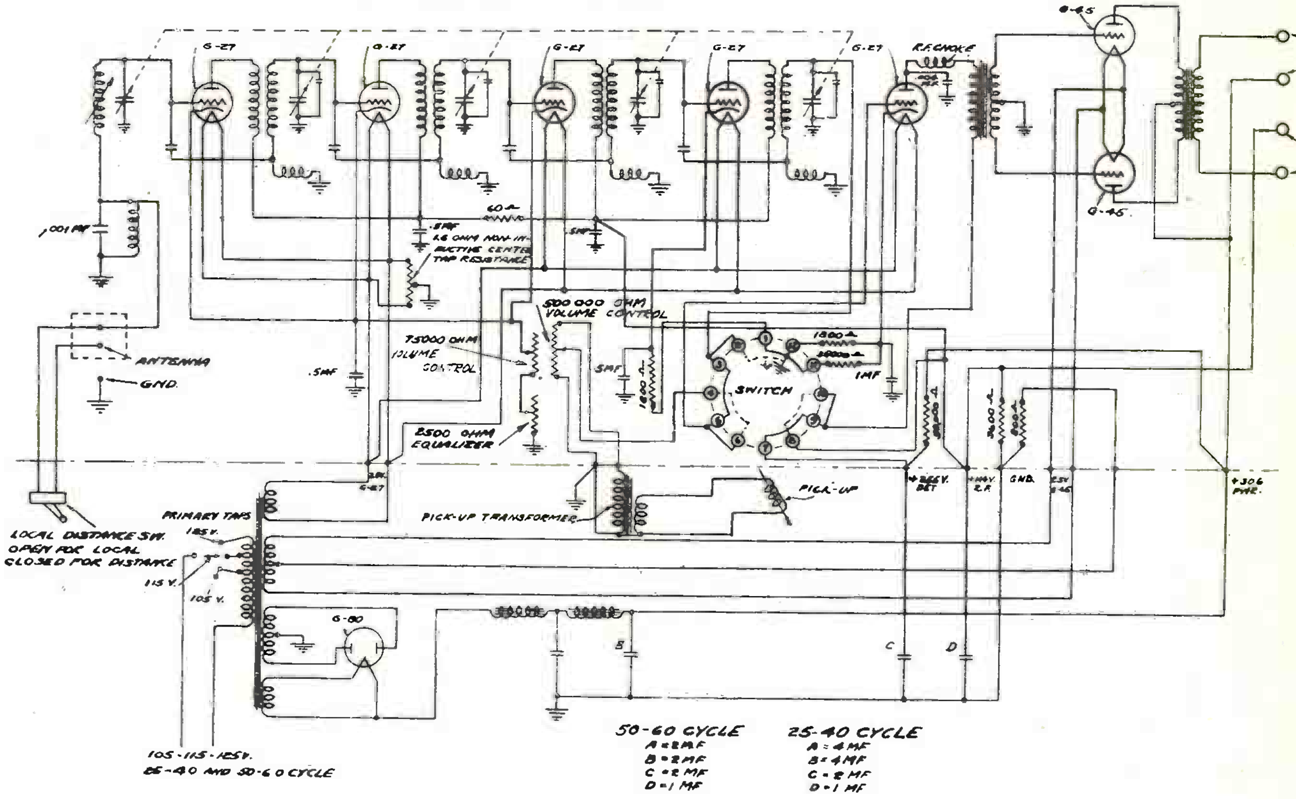

SCHEMATIC DIAGRAM FOR MODEL 180 / 181 MAJESTIC RECEIVERS

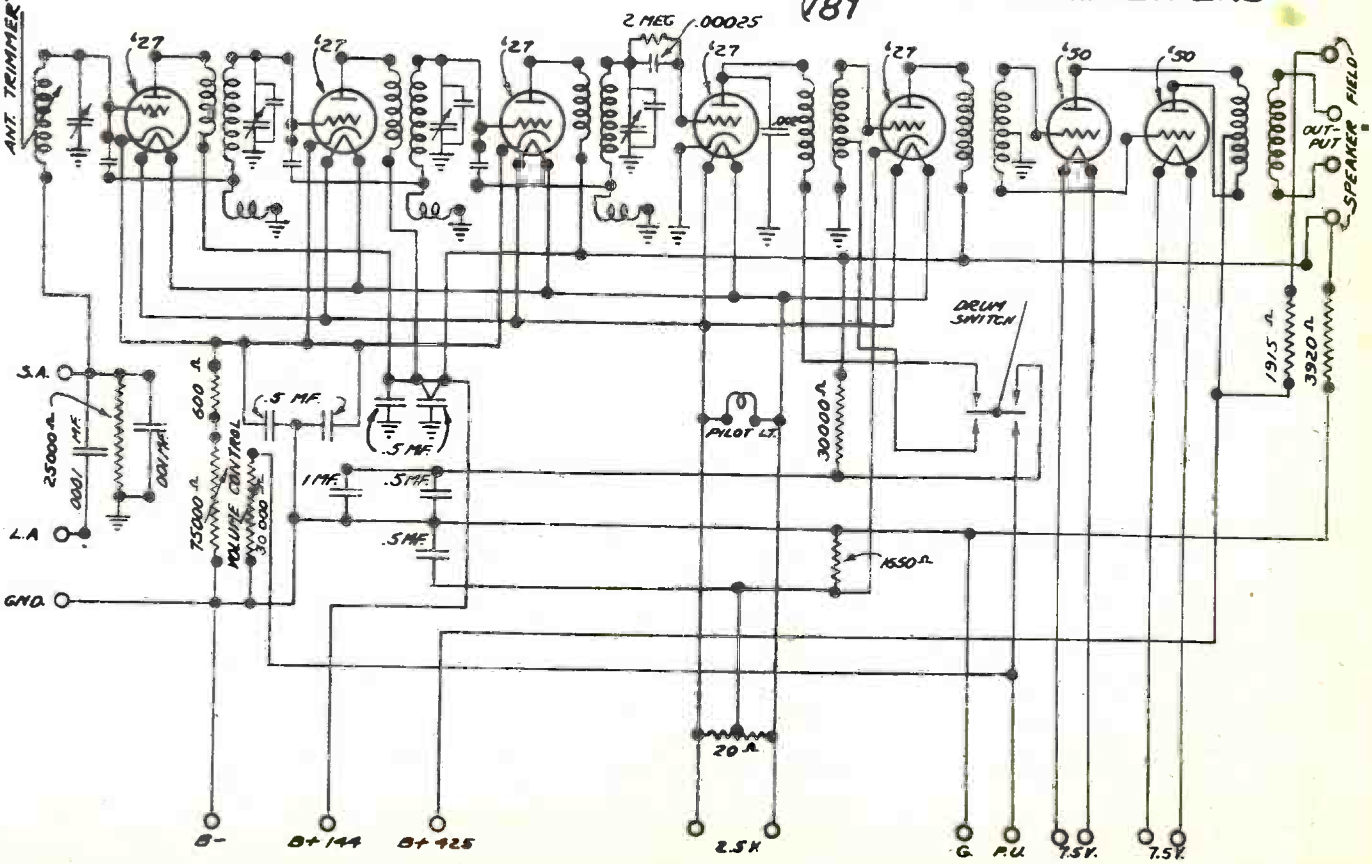

GRIGSBY-GRUNOW CO.

SCHEMATIC DIAGRAM OF 7P6-7P3 POWER PACK (OLD WIRING)

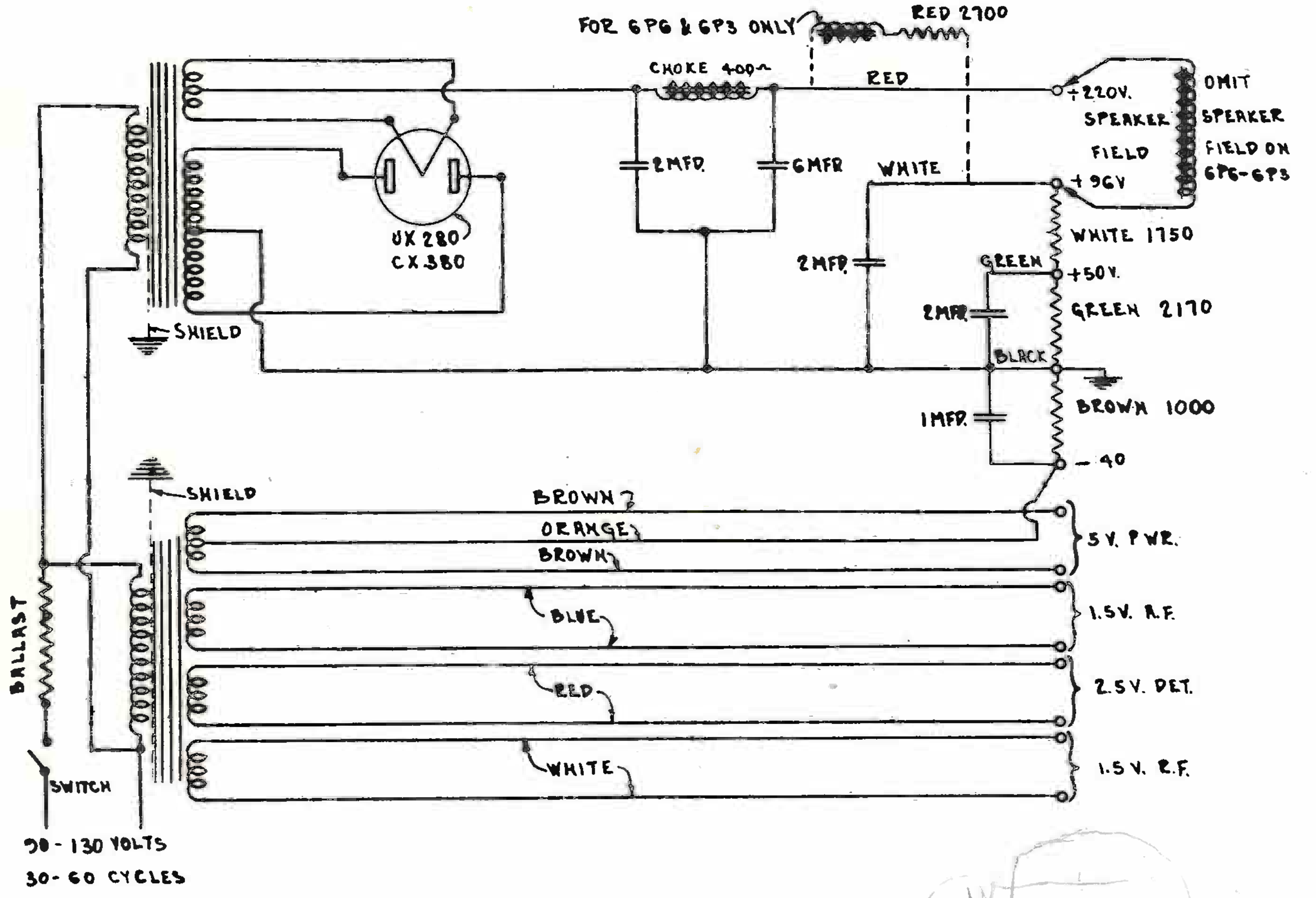

SCHEMATIC DIAGRAM OF 7P6-7P3 POWER PACK

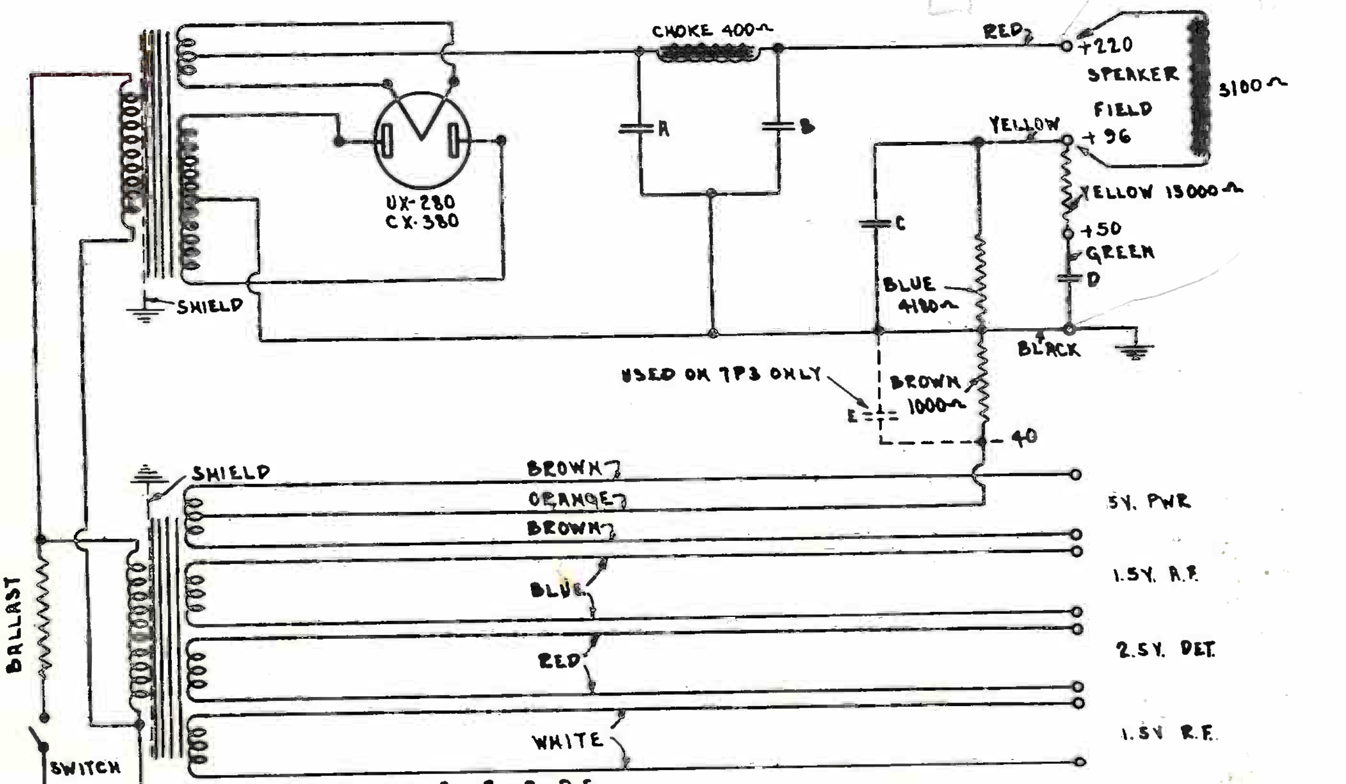

90-130 VOLTS
30- 60 CYCLES

	A	B	C	D	E	
7P6	2	3	3	1		MFD.
7P3	2	6	2	2	1	MFD.

GRIGSBY-GRUNOW CO.

SCHEMATIC DIAGRAM OF 8P6 & 8P3 POWER UNITS

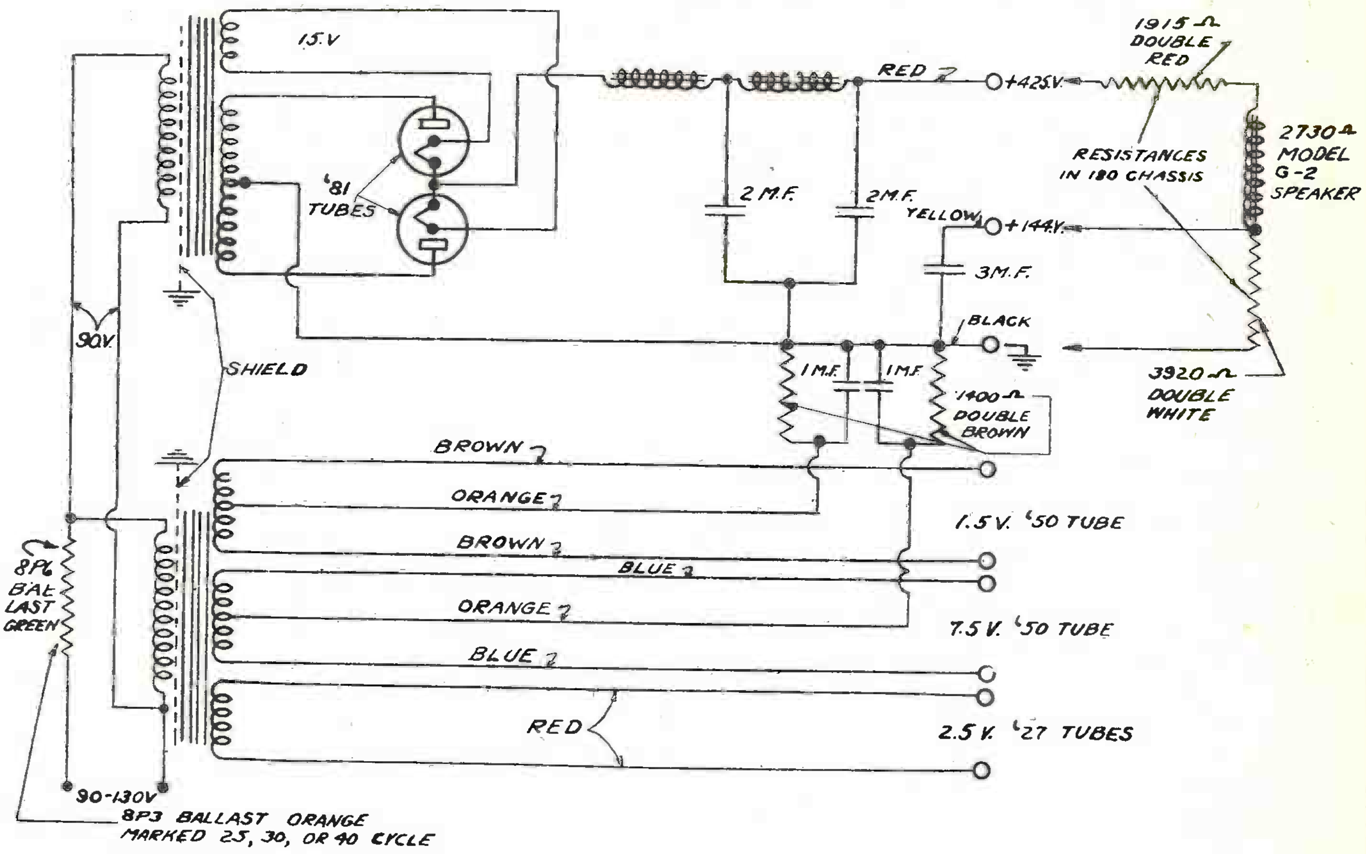

SCHEMATIC DIAGRAM OF POWER UNIT AND VOLTAGE DIVIDER SYSTEM MODEL 130-A MAJESTIC SUPER SCREEN GRID CHASSIS

25-40 AND 50-60 CYCLE

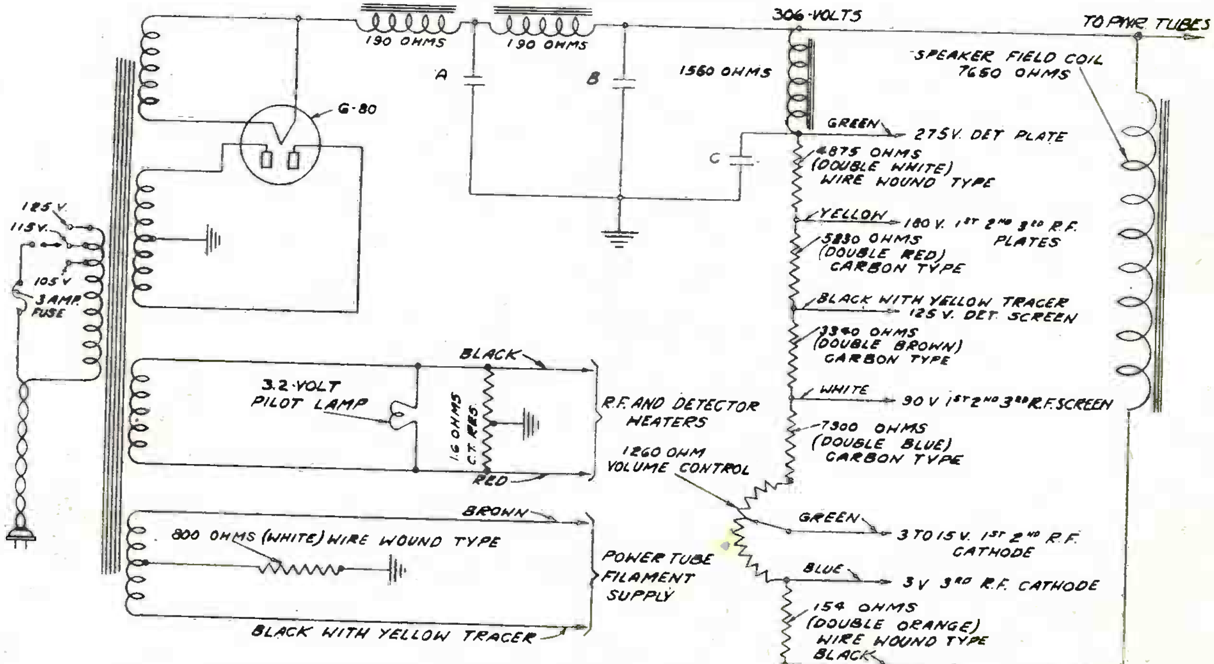

CONDENSER BANK

50-60 CYCLE	25-40 CYCLE
A = 2 MFD	A = 4 MFD
B = 2 MFD	B = 4 MFD
C = 2 MFD	C = 2 MFD

GRIGSBY-GRUNOW CO.

SCHEMATIC DIAGRAM of MAJESTIC SUPER SCREEN GRID RECEIVER

MODEL 130-A CHASSIS 25-40 & 50-60 CYCLE

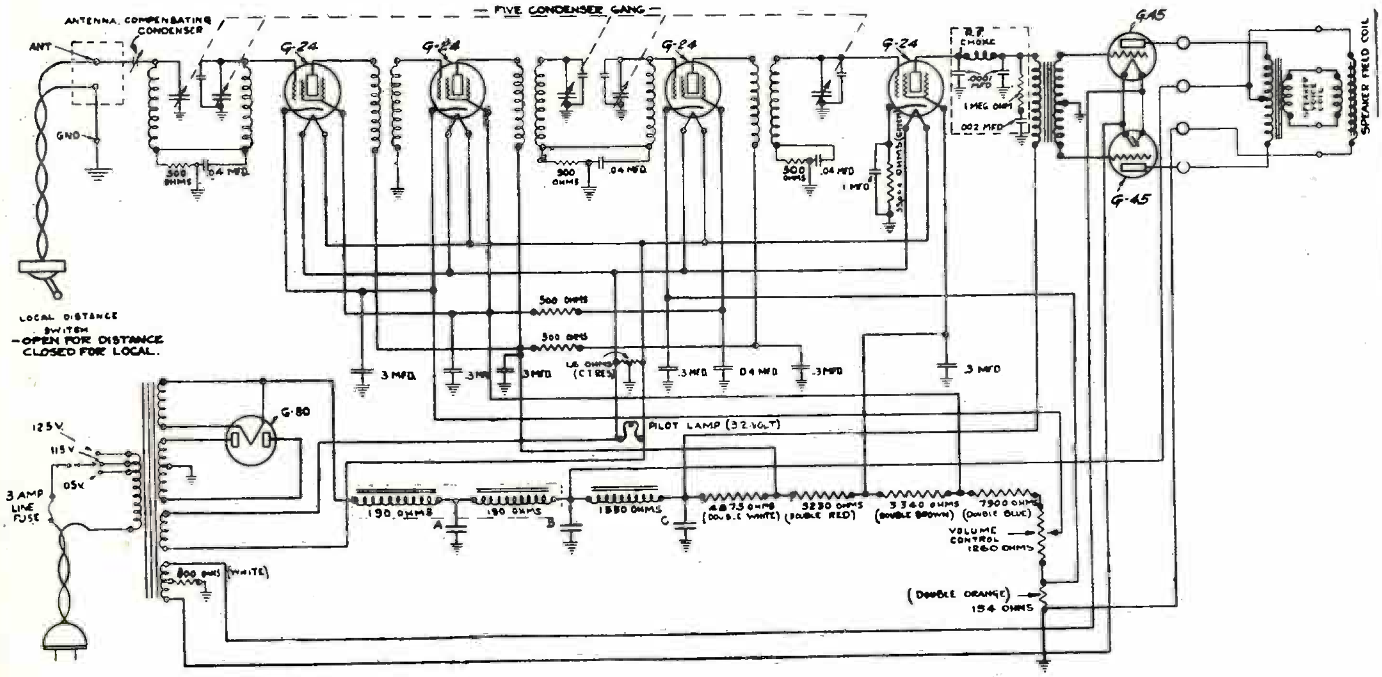

50-60 CYCLE	25-40 CYCLE
A - 2 MF	A - 4 MF
B - 2 MF	B - 4 MF
C - 2 MF	C - 2 MF

SCHEMATIC DIAGRAM of MAJESTIC SUPER SCREEN GRID RECEIVER

MODEL 230-A CHASSIS

25 - 40 & 50 - 60 CYCLE

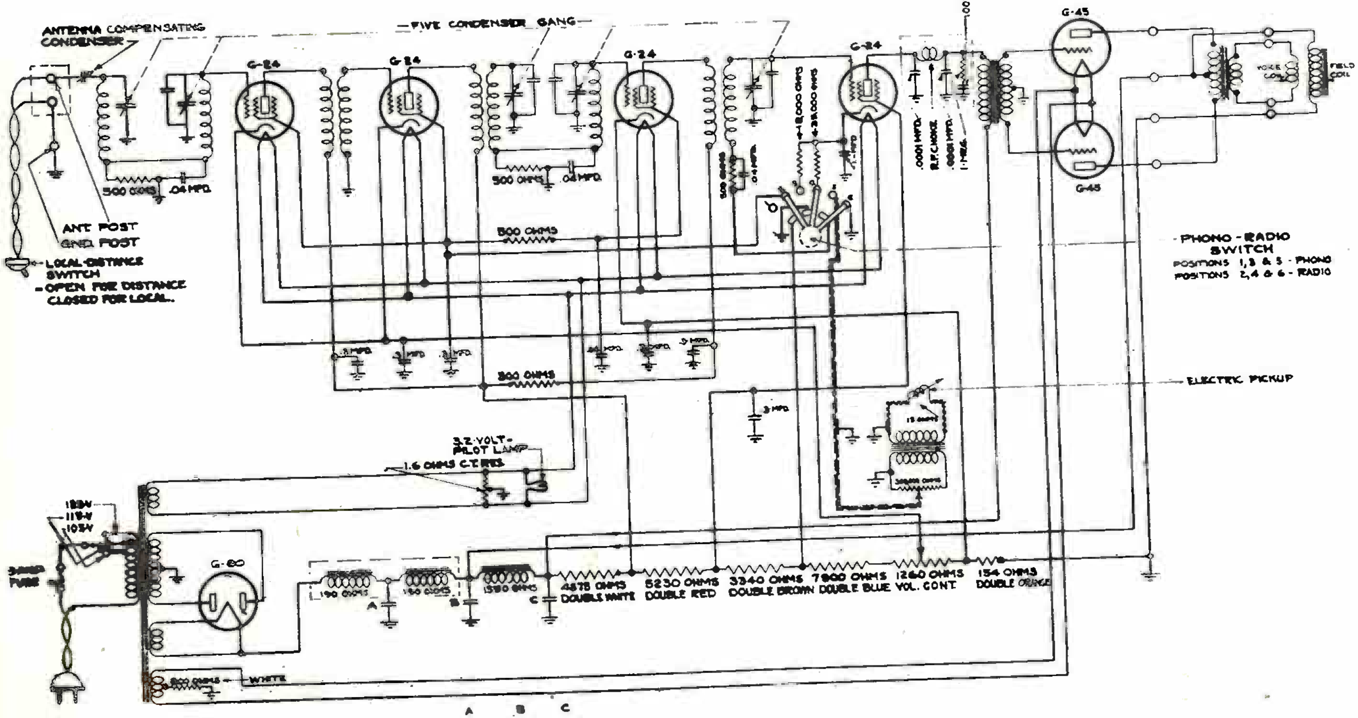

	A	B	C
25-40 CYCLE	4-MFD.	4MFD.	2MFD.
50-60 CYCLE	2-MFD.	2MFD.	2MFD.

GULBRANSEN COMPANY

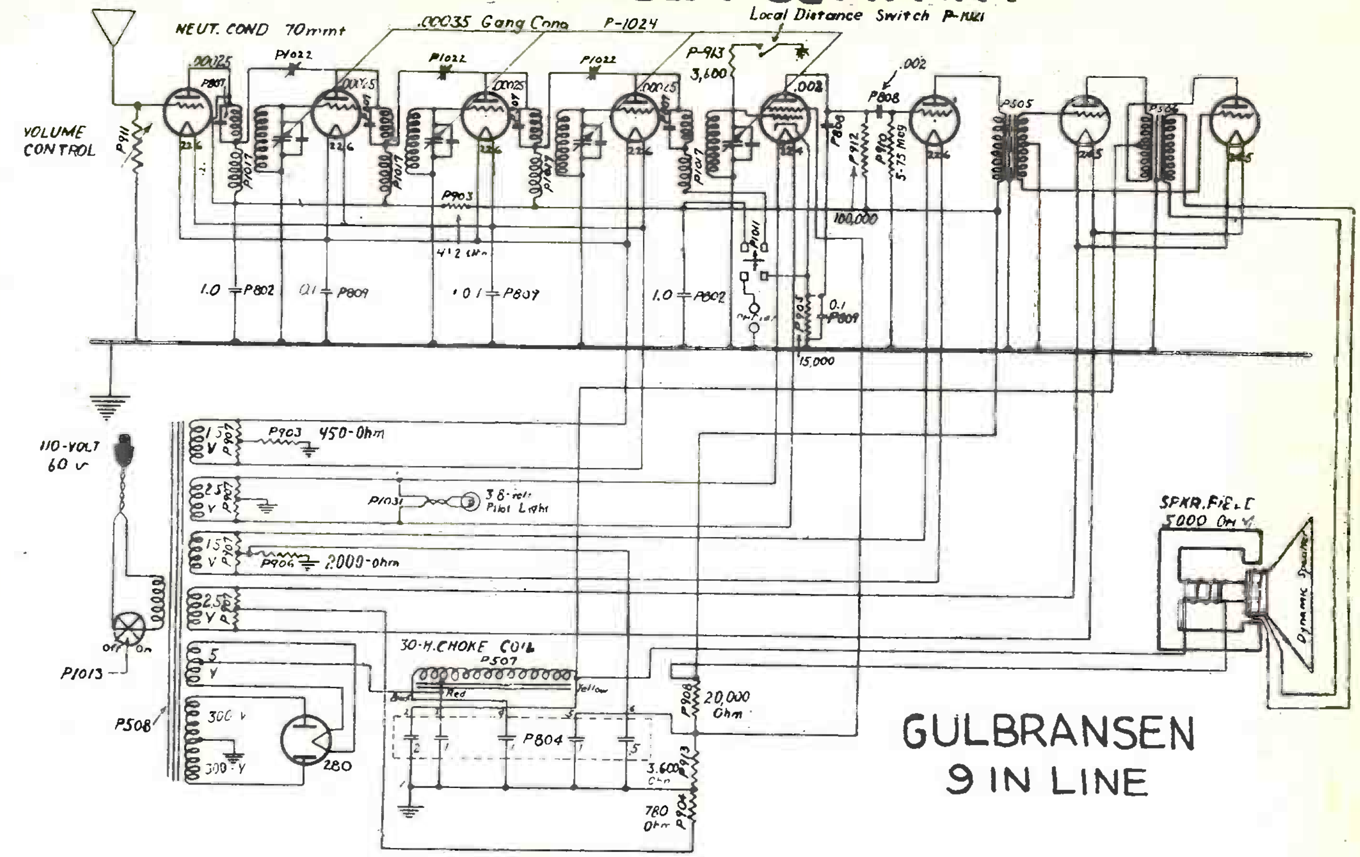

GULBRANSEN
9 IN LINE

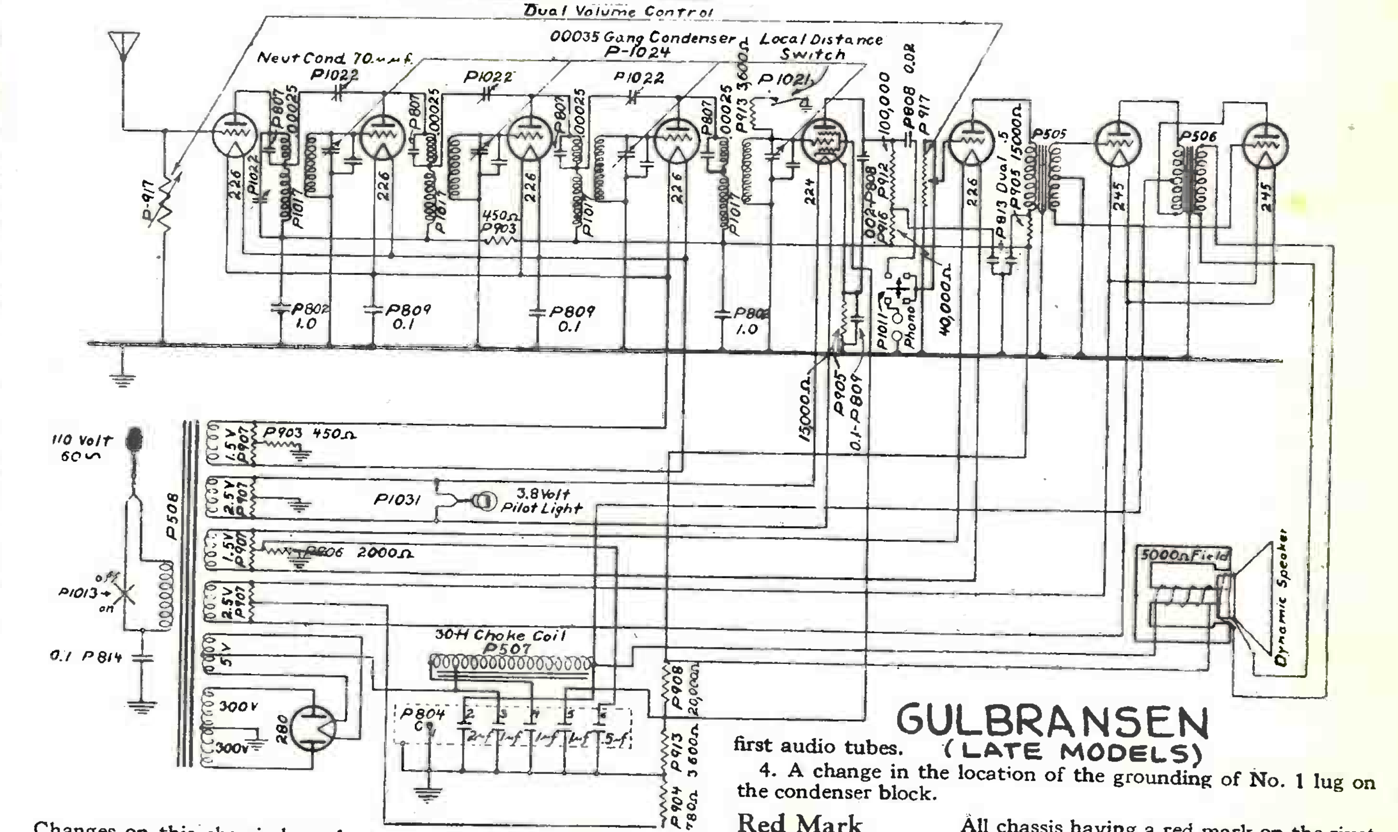

GULBRANSEN
(LATE MODELS)

Changes on this chassis have been made on several different occasions and to distinguish how one chassis differs from another, an identification mark is placed on each one changed. This identification mark is a dot of paint found on the end rivet of the tube socket strip.

Yellow Mark The chassis having the first changes may be identified by the yellow indicating mark. This involves four changes.

1. A "dual-volume control" in place of the single type.
2. An interchange of position of the two audio transformers.
3. An addition of a "dual half microfarad condenser" (P. 813) and two carbon resistors in the "B" circuit of the detector and first audio tubes.
4. A change in the location of the grounding of No. 1 lug on the condenser block.

Red Mark (Serial Number 39,000-42,999) All chassis having a red mark on the rivet of the tube socket strip have all of the changes mentioned above and in addition, have a one-tenth microfarad condenser (P. 814) connected from ground to one side of the 110 volt line

Green Mark (Serial Number 43,000 and up) All Chassis with a green mark on the rivet of the tube socket strip contain the above changes and in addition have a change in the "combination phonograph switch" circuit. This changed circuit makes use of only the audio system of the set for phonograph reproduction. whereas the original circuit included the detector tube

KELLOG S'W'B'D. & SUPPLY CO.

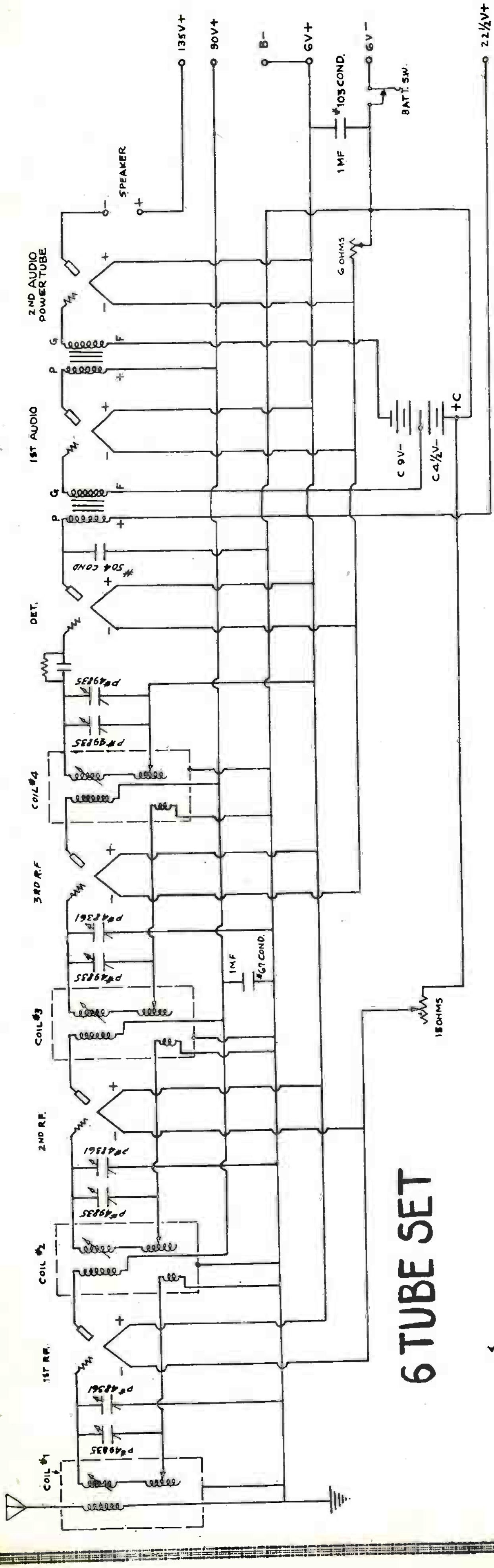

6 TUBE SET

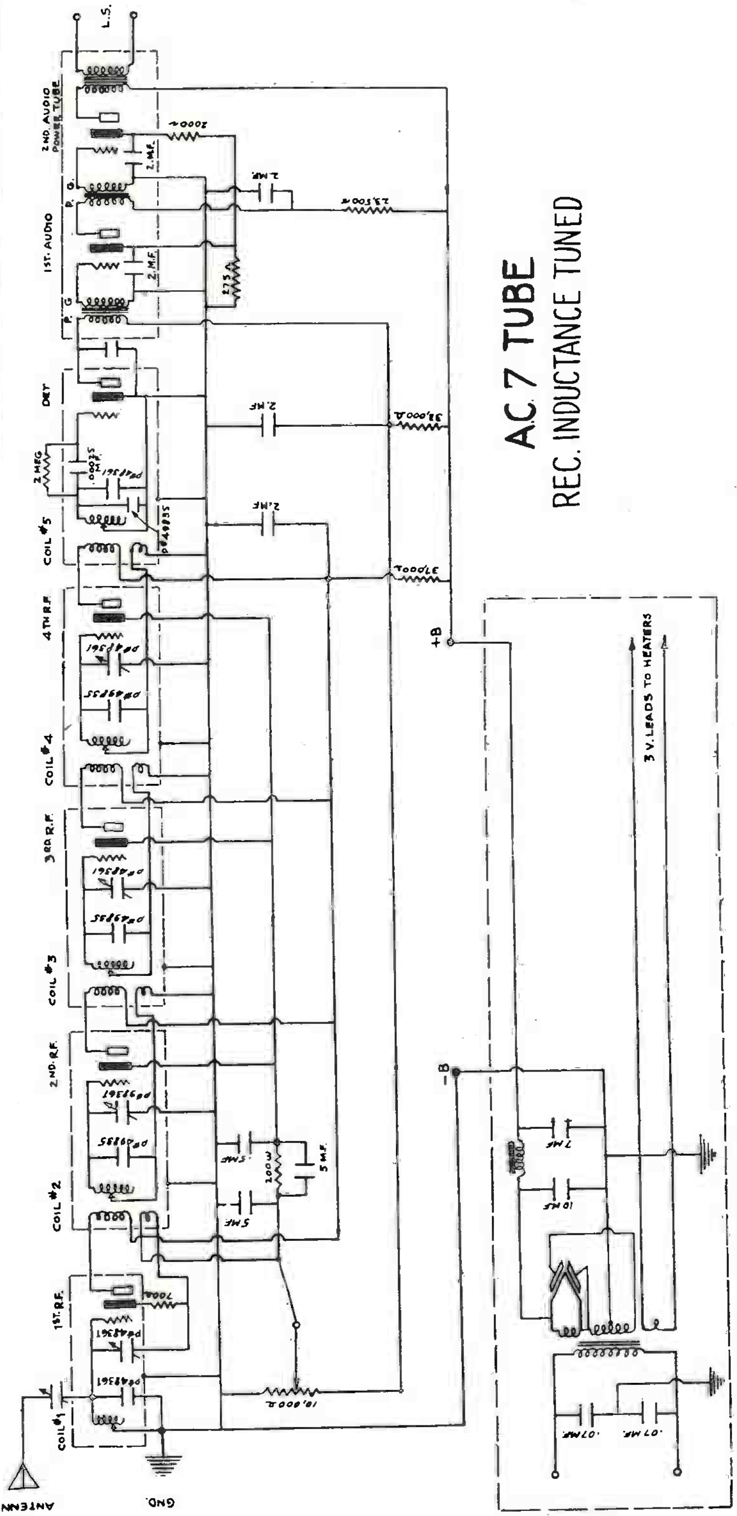

AC 7 TUBE
REC. INDUCTANCE TUNED

KELLOG SW'BD. & SUPPLY CO.

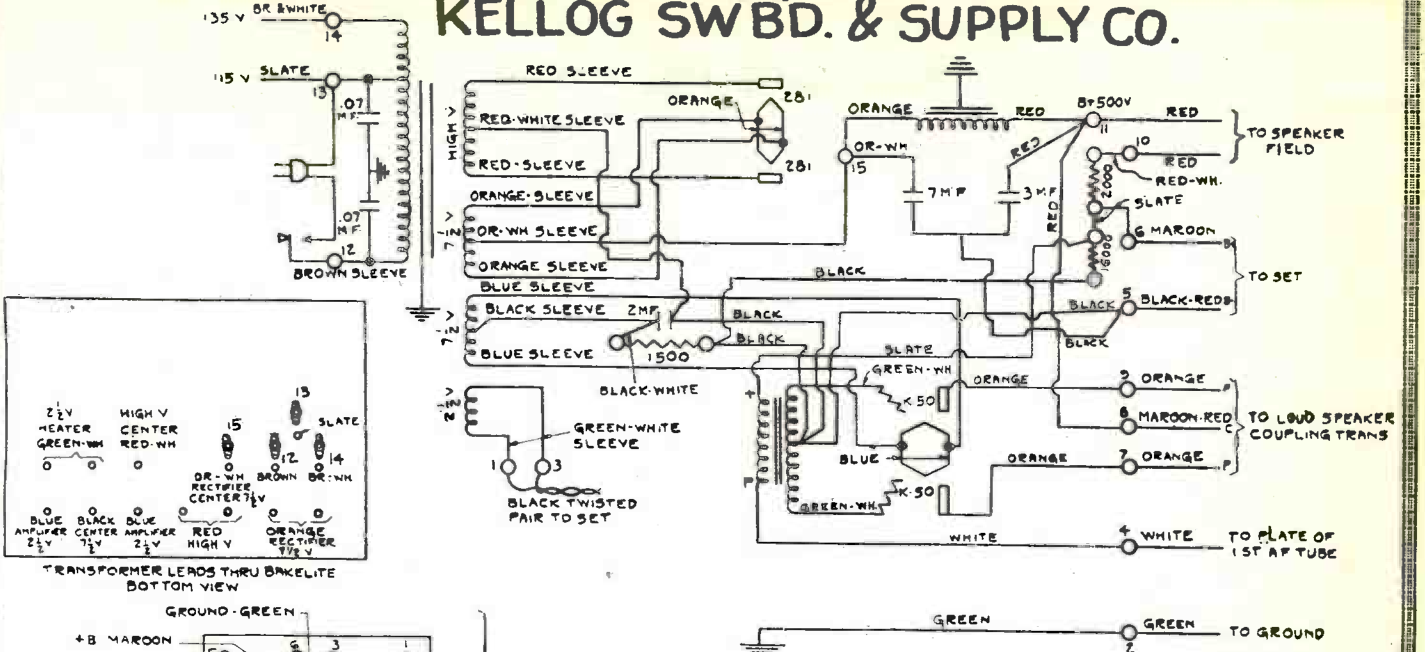

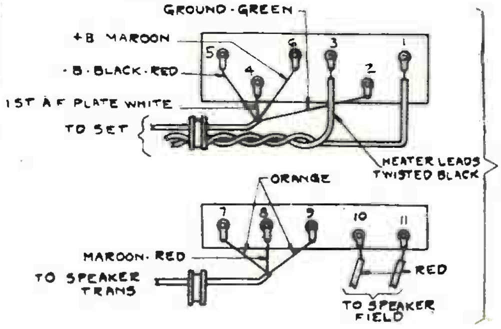

POWER UNIT CIRCUIT
K-50 TYPE

FOR SETS 524, 525, 527, 528

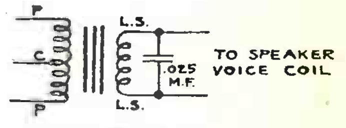

LOUD SPEAKER COUPLING TRANSFORMER

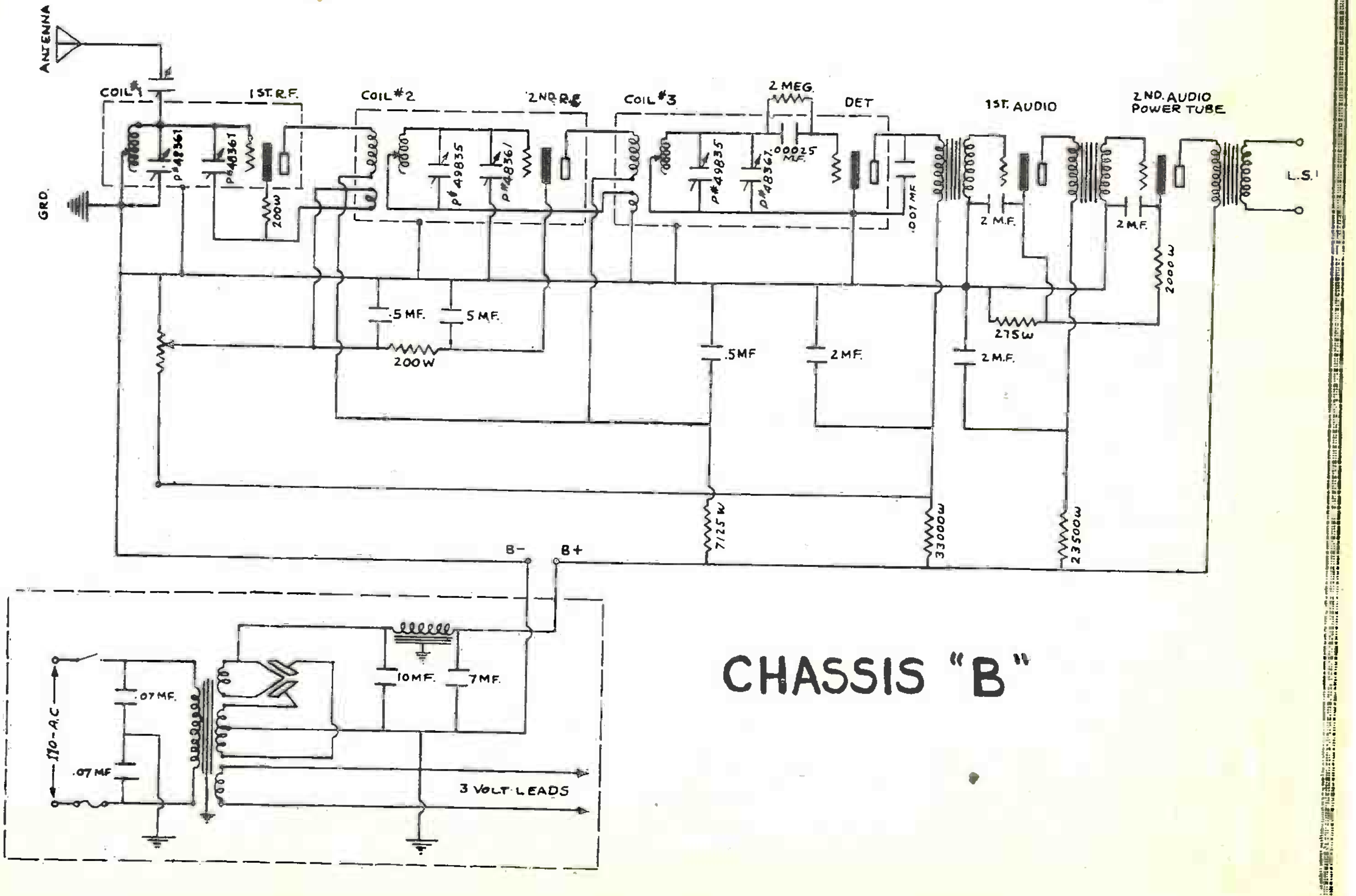

CHASSIS "B"

Radio Service Data Sheet

KELLOGG 523 AND 526

These two models differ only in the power supply to which they are adapted: their R.F. chasses are identical. The "523" is designed for standard 60-cycle alternating current; the "526" for operation on a lower frequency—25 cycles up—and is recommended for even 50-cycle supply. The receiver proper has three stages of '24-type screen-grid amplification, with '27-type detector and first audio; and employs a '27 type tube in a special circuit as an automatic volume control, described later. The push-pull '45-type power stage and power supply is a separate unit, different in the two models. This unit is accompanied by a dynamic reproducer, built into the console; its field-coil resistance is 2000 ohms.

The complete circuits are shown in schematic diagram below: the values of the parts shown are as follows:

Resistors: R1, the manual volume control (operated by lower right-hand knob) 50,000 ohms; R2, R4, R6, each 2 megohms; R3, R5, R7, R15, R18, R19, each 1000 ohms; R8, 10,000 ohms; R9, 2,000 ohms; R10, 100,000 ohms; R11, 50,000 ohms; R12, 500 ohms; R13, 130 ohms; R14, 200 ohms; R16, 1,500 ohms; R17, 3,000 ohms; R21, 30 ohms center-tapped; R22, 750 ohms. Capacities are as follows: C2, C4, C6, each .0005-mf.; C8, .001-mf.; C9, C11, C12, C13, C15, C16, C17, C19, C20, each 0.3-mf.; C10, C14, C18, C23, each 0.5-mf.; C21, C22, C25, C27, (high-voltage), C28, each 2.0-mf.; C26 (high-voltage), 5.0-mf.; C24, .0005-mf.; C29, C30, each .07-mf.; C31, .025-mf. R20 has a value of 3,300 ohms, with a '45 tube; and the "Strap" illustrated replaces a resistor used with '50 amplifiers.

The plate circuit of V3 is coupled through C24 to the grid circuit of V6, the automatic volume-control tube, which automatically governs the amplification of V1 and V2 by changing the grid bias of these tubes; and thus maintains a constant R.F. voltage output. R14, adjusted by the knob at lower left, is the manual control for correct regulation of this tube; at its extreme setting, in a counter-clockwise direction, the magnetic pick-up is connected to the A.F. amplifier binding posts, while the detector is disconnected by Sw1.

V6 is located in the round shield can and may require replacing. To check the operation of this tube, turn the automatic volume control on full and remove the tube. The volume should remain approximately the same. Now replace the tube and (after it has again become sufficiently heated) change the volume control setting to low volume. If the tube should now be removed, the volume will be restored to approximately the same level as with the volume control turned on full. If the volume increases during the first test, the tube is over-controlling and should be changed. (Such a tube will operate exceptionally well as a detector or first audio tube.) If the volume does not increase during the second test, or if the control does not reduce the volume to a whisper, the volume-control tube is under-controlling and should be replaced. Such a tube may be found defective for operation in any other position.

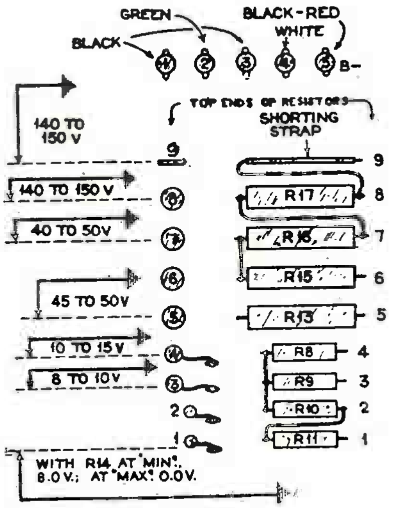

A bottom view of connections at the right of the chassis: showing positions of terminals at top and in the center. The figures at the right edge show the positions of the terminals in the circuit; the voltages at the left, the respective readings between them and ground. "B—" or No. 5 terminal, is below ground potential. The sequence of tubes in the set is from left to right, with V6 between V4 and V5.

R.F. choke Ch1 (located on a single mounting on the lower side of the sub-panel) is catalog No. P55516. Ch2 has a D.C. resistance of about 325 ohms. The primaries of T1 and T2 have resistances of about 800 ohms each.

The voltages shown in the illustration are the operating potentials obtained with a 115-volt supply. Accidental grounding of a high-potential lead, during test, may burn out resistors, damage V9, or blow fuses.

The aligning condensers, mounted on the front of each unit of the gang condenser, are reached by removing the chassis and adjusting through the four round holes in the front of the upper shield. This operation is to be performed while the set is tuned to a weak signal, of a frequency below 1,300 kc. (230 meters); or, since the volume of a station is continually varying, an A.F.-modulated R.F. oscillator may advantageously be used instead. Start the alignment process with the circuit of V1. The maximum capacity of C7 is not the same as for C1, C3 or C5; hence the "apparent" selectivity at high frequencies (low wavelengths, and due to the increased number of dial-scale-divisions per station-carrier position) will not be as great as in the other stages.

To change the drum dial lamp, turn the drum dial so that the opening is on top. The bulb may then be reached with the fingers.

The sensitivity of this set is so great that the antenna binding post will pick up sufficient energy, in certain localities and under certain conditions, to give loud-speaker reproduction of the signal without antenna or ground being connected to the set. If this energy is in the form of interference from radiating electrical equipment or a powerful broadcast station, it may cause disturbance with R1 and R14 adjusted for maximum volume.

Oscillation or squealing, if not due to a station heterodyne, is almost certain to be due to a defective by-pass condenser or faulty tube.

Resistors R11, R10, R9, R8, R13, R15, R16, and R17 are placed in this order and underneath the sub-panel; the last four are of the vitreous type. R12 and R18 use a double mounting, inside the base. R19 is mounted singly inside the base at the rear.

The rating of a replacement fuse is 3 amps.

The chassis is held by four large machine screws through the bottom of the cabinet.

The output transformer T3 is held by four screws and covered by a steel protector, held by two wood screws.

This receiver works best with a good ground connection.

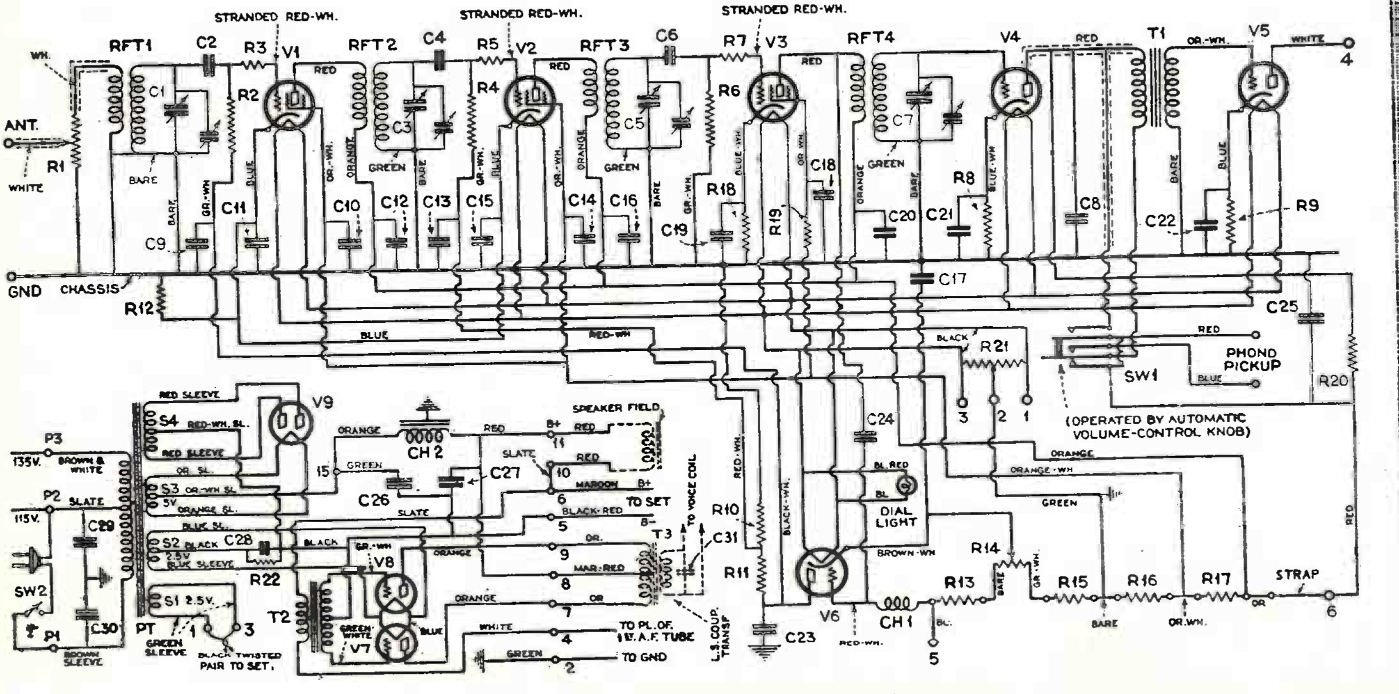

Power Unit Type 245 is used with the 523 and 526 receivers.

KELLOG S'W'BD. & SUPPLY CO.

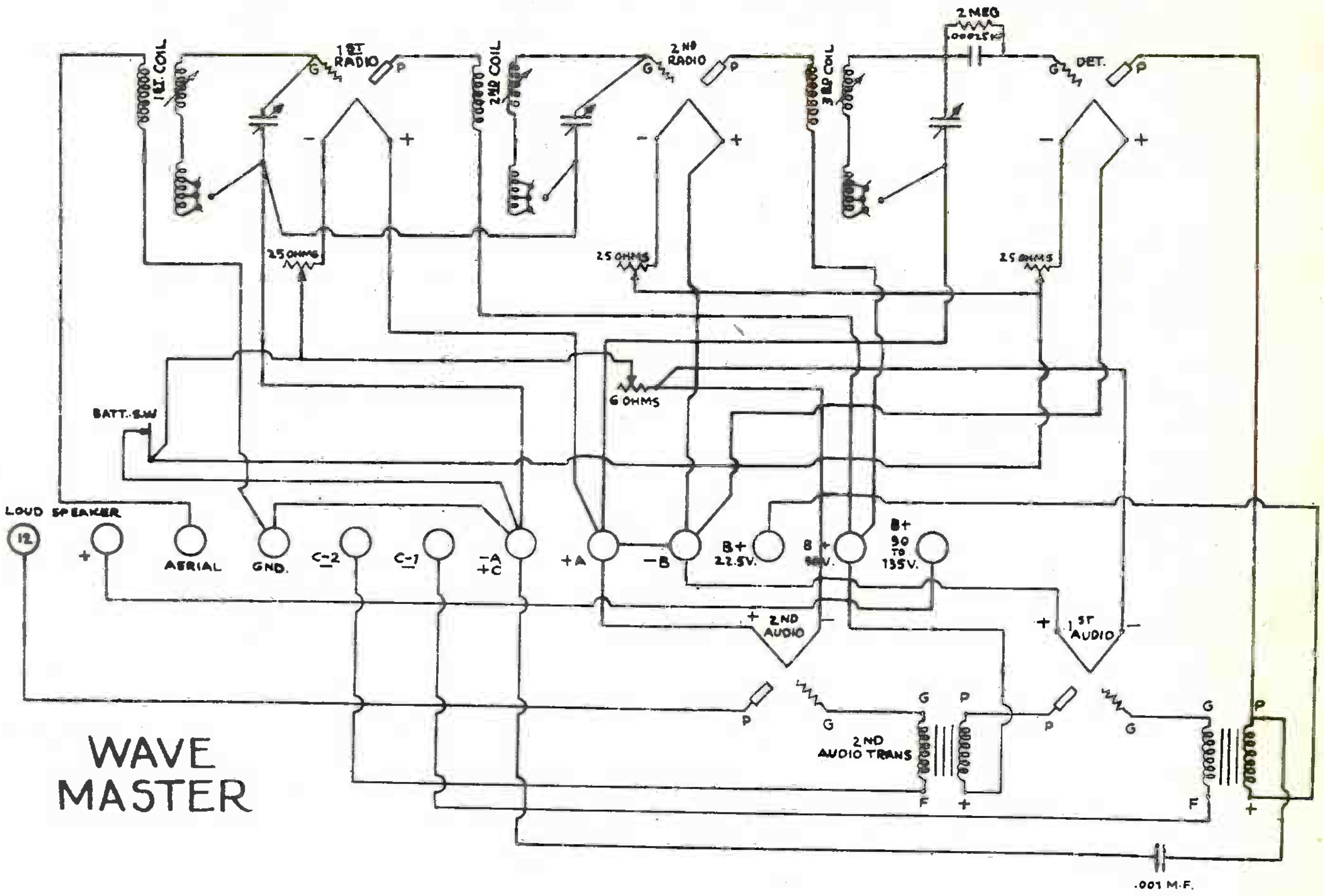

WAVE MASTER

R.F.L.- 7-TUBE CASCADE RECEIVER

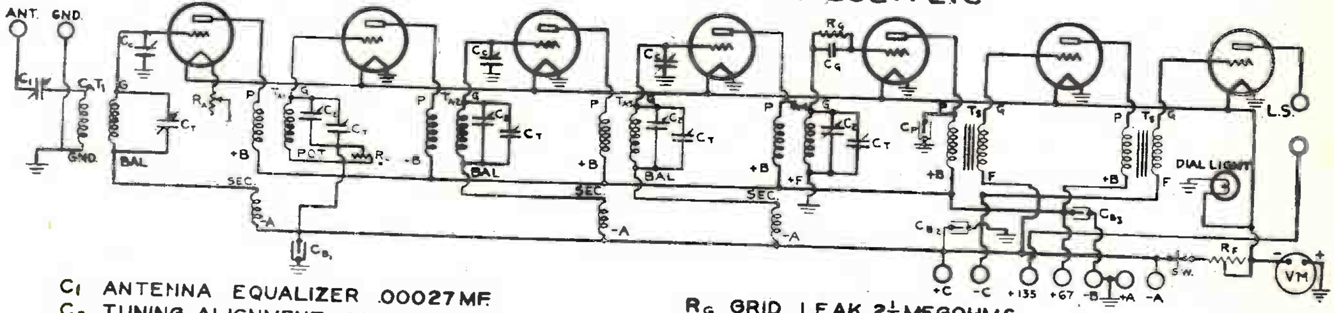

C_1	ANTENNA EQUALIZER .00027MF.
C_2	TUNING ALIGNMENT CONDENSER.
C_B	BYPASS CONDENSER 1MFD.
C_C	BALANCING CONDENSER .000060MF.
C_G	GRID CONDENSER .00025MF.
C_P	BYPASS CONDENSER .001MF.
C_T	GANG CONDENSER .0005MF UNITS[STATION SELECTOR]
L	DIAL LIGHT.
R	ROTOR PLATES OF VARIABLE CONDENSER
R_F	FILAMENT RHEOSTAT 4 OHMS.

R_G	GRID LEAK 2½ MEGOHMS.	
R_L	NON-INDUCTIVE WIRE RESISTANCE 200 OHMS.	VOLUME CONTROL
R_A	RHEOSTAT 20 OHMS.	
S	STATIONARY PLATES OF VARIABLE CONDENSER.	
SW.	FILAMENT SWITCH.	
$T_{A1\text{-}A3}$	RADIO FREQUENCY TRANSFORMERS.	
T_1	INPUT TRANSFORMER	
T_S	KELLOGG AUDIO TRANSFORMER	
VM	FILAMENT VOLTMETER	
⏚	GROUND TO SHIELD	

COLIN B. KENNEDY CORP.

MODEL~110

(RANGE~175 TO 25,000)

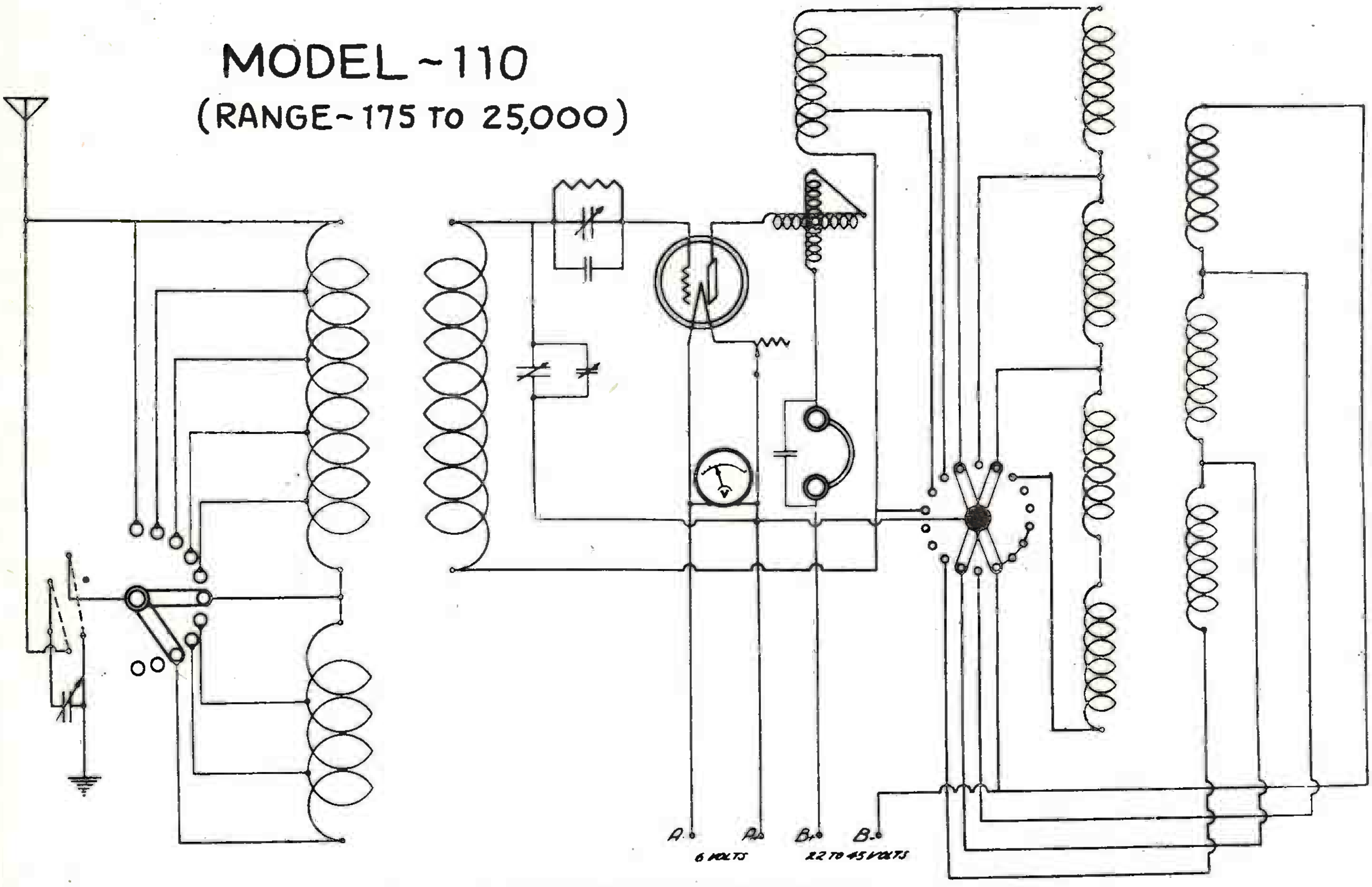

CAUTION — WHEN THIS SET IS USED WITH AMPLIFIER IT IS NECESSARY TO USE A SEPERATE "B" BATTERY FOR EACH UNIT

MODEL~281

(RANGE 175 TO 1,000)

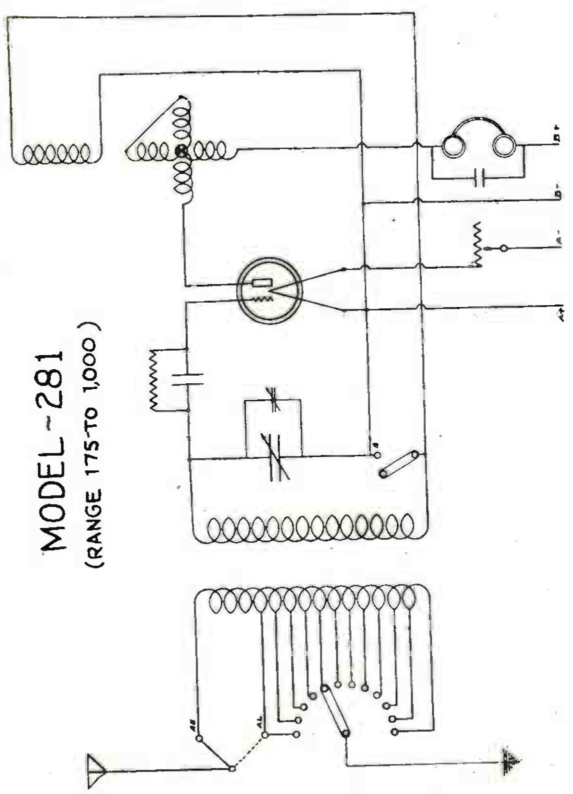

MODEL~220

(RANGE 175 TO 3300)

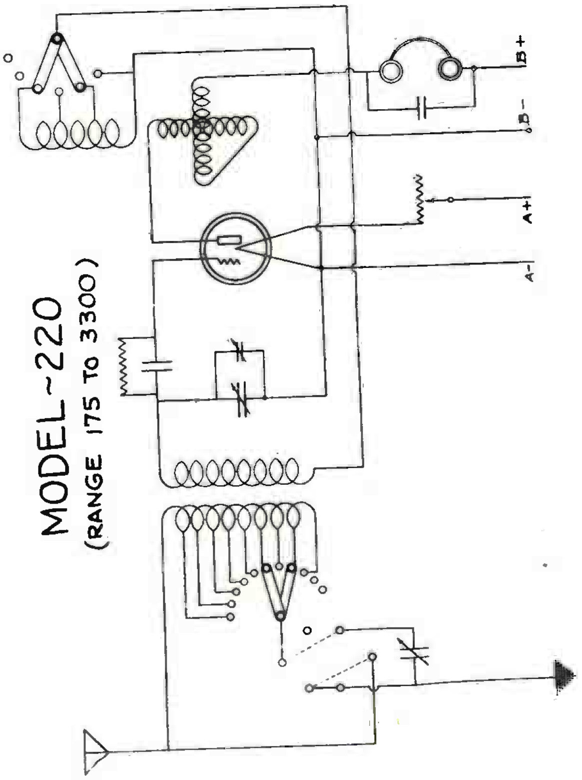

COLIN B. KENNEDY CORP.

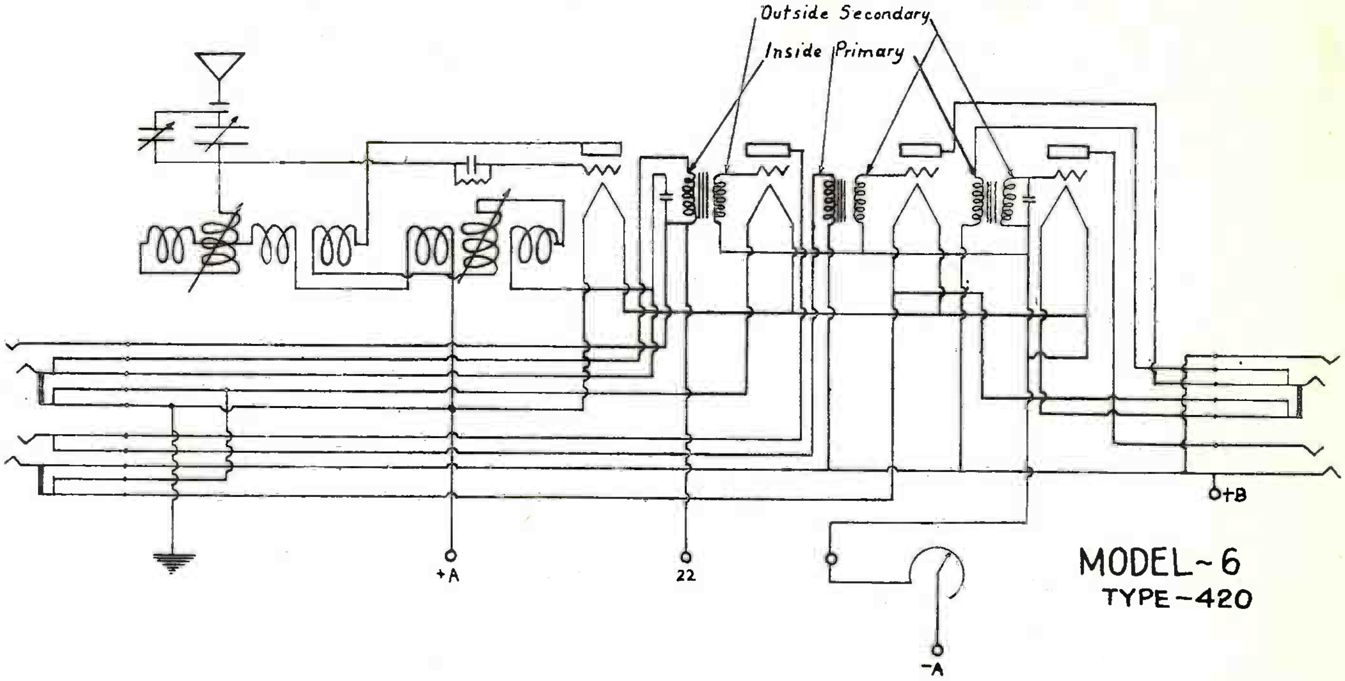

MODEL-6
TYPE-420

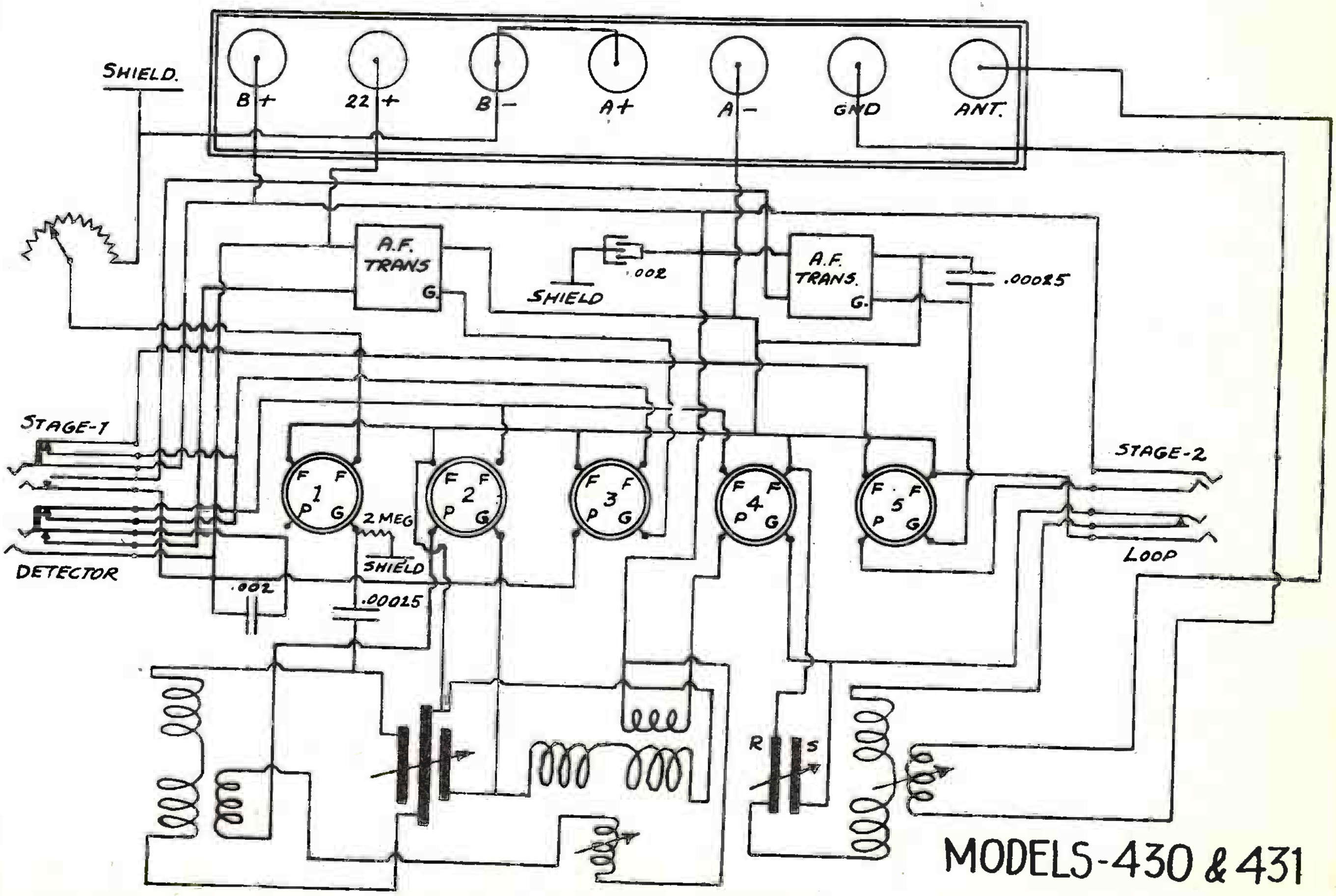

MODELS-430 & 431

COLIN B. KENNEDY CORP.

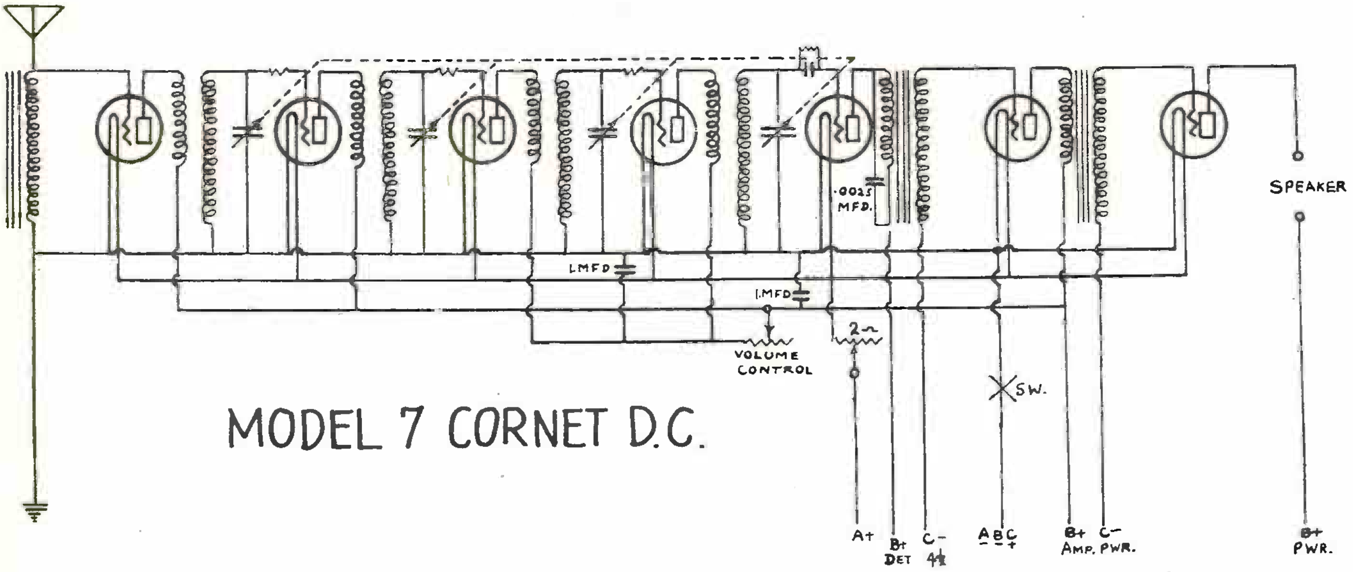

MODEL 7 CORNET D.C.

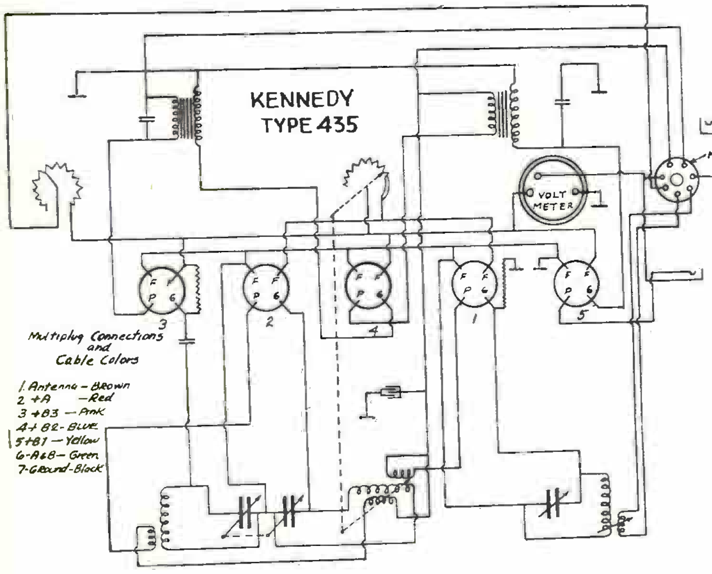

KENNEDY TYPE 435

Multiplug Connections and Cable Colors

1. Antenna – Brown
2 +A – Red
3 +B3 – Pink
4 + B2 - Blue
5 +B1 – Yellow
6 - A & B – Green
7 - Ground - Black

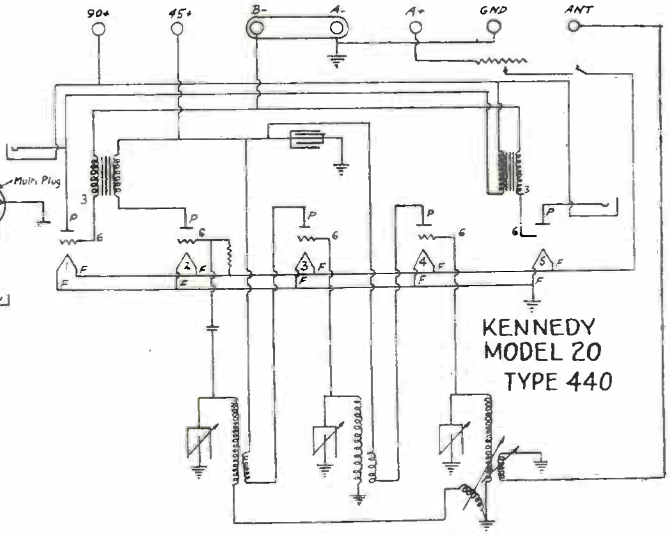

KENNEDY MODEL 20 TYPE 440

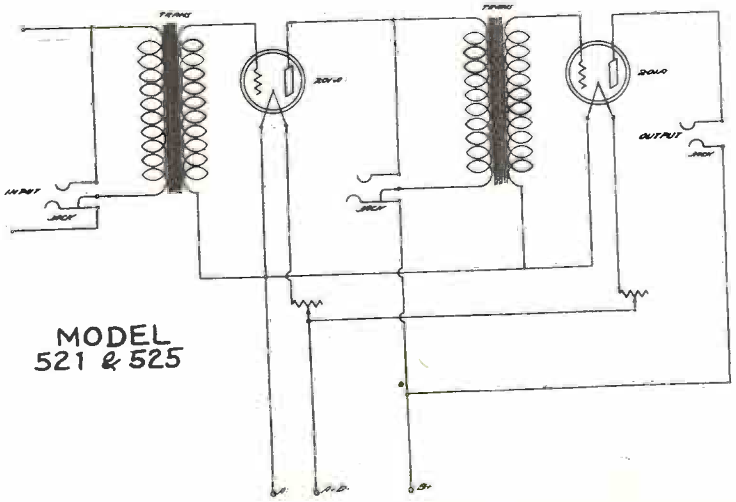

MODEL 521 & 525

COLIN B. KENNEDY CORP.

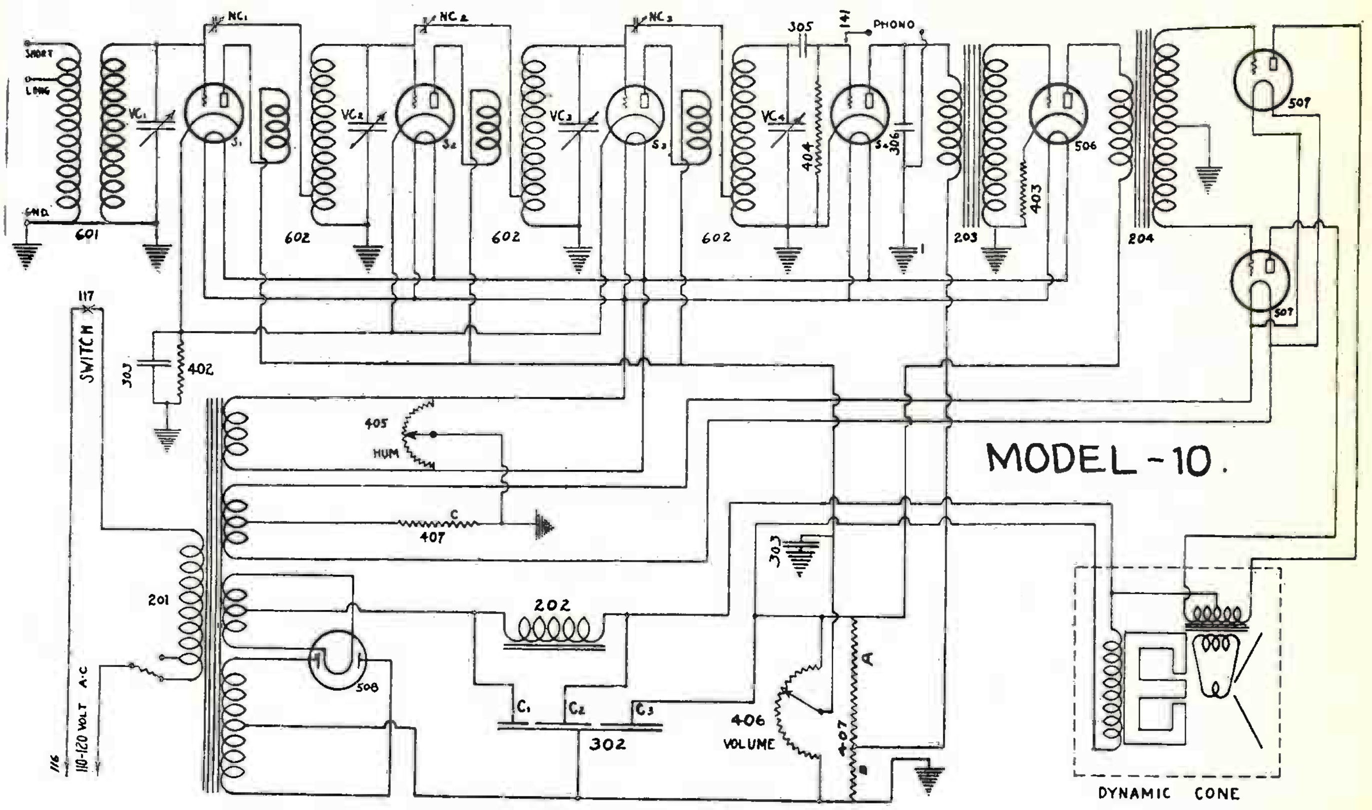

MODEL-10.

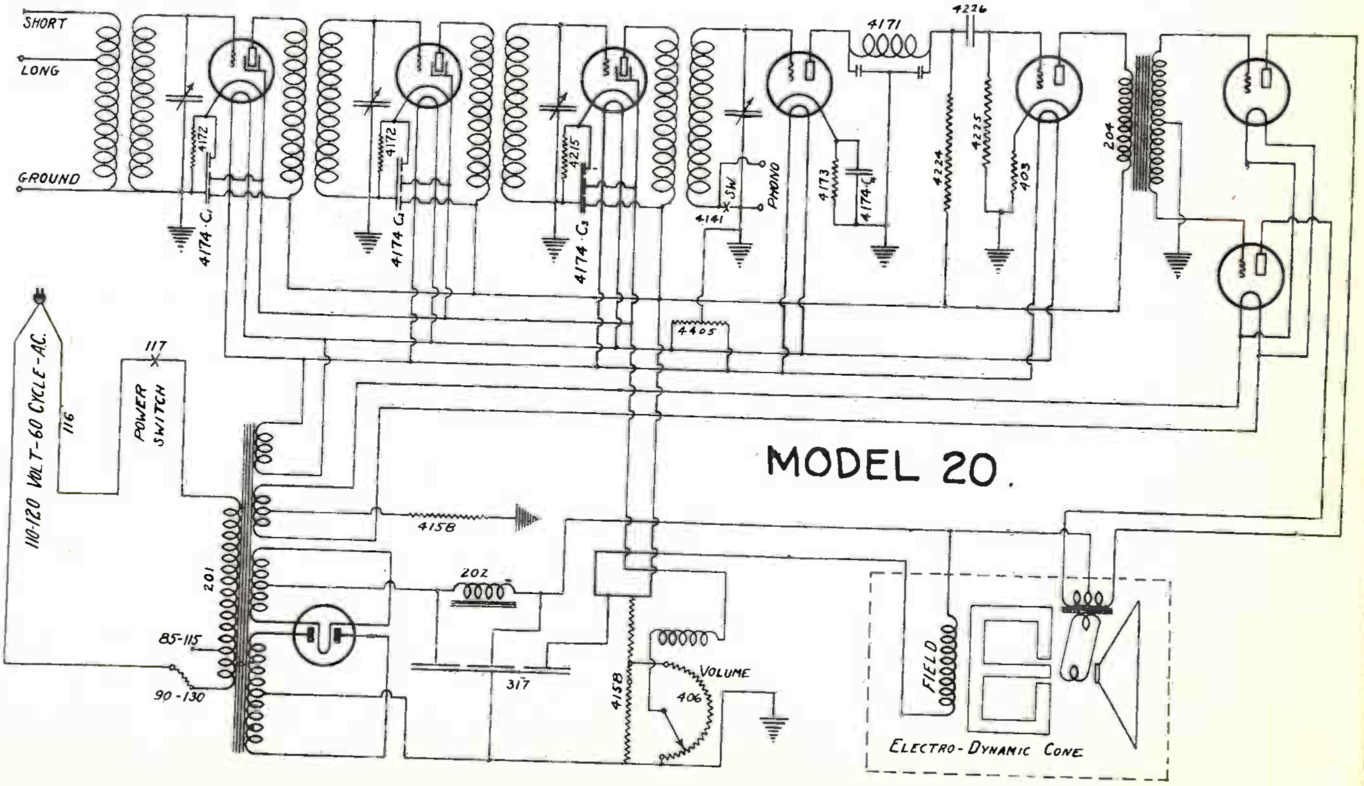

MODEL 20.

KING MFG. CORP.

MODEL 30 T.R.F RECEIVER

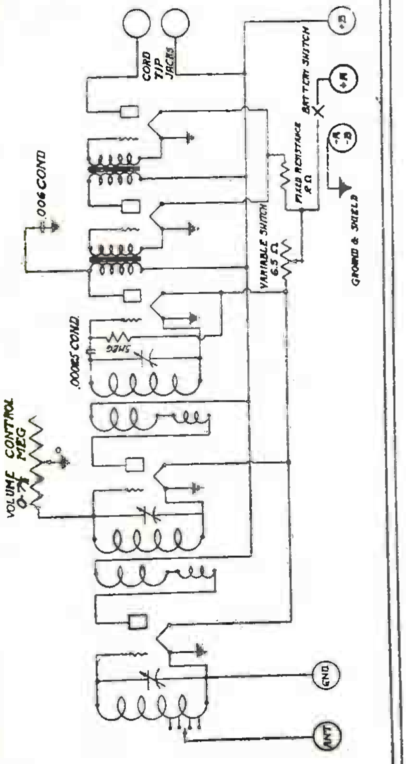

MODEL 61 T.R.F. RECEIVER

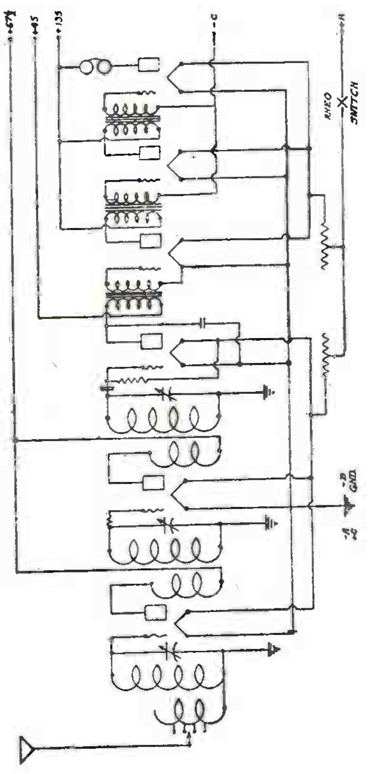

MODEL 62 T.R.F. RECEIVER

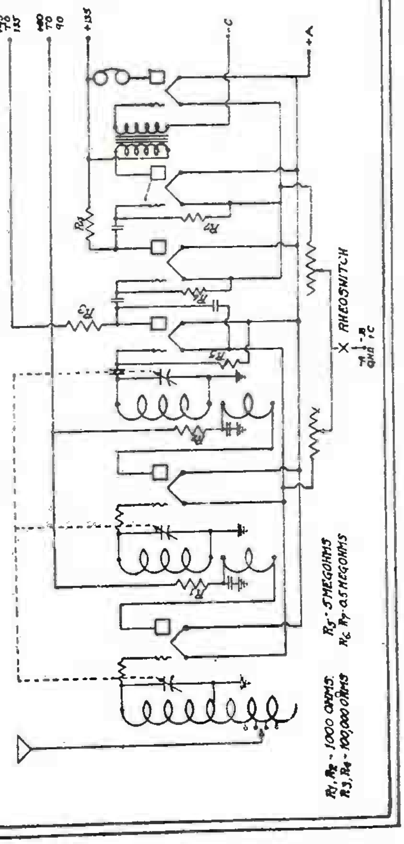

MODEL 10K1 NEUT. RECEIVER

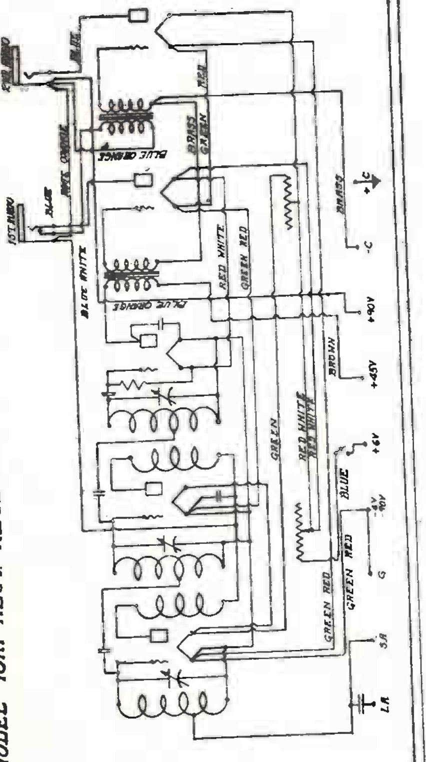

MODEL 25 NEUT RECEIVER

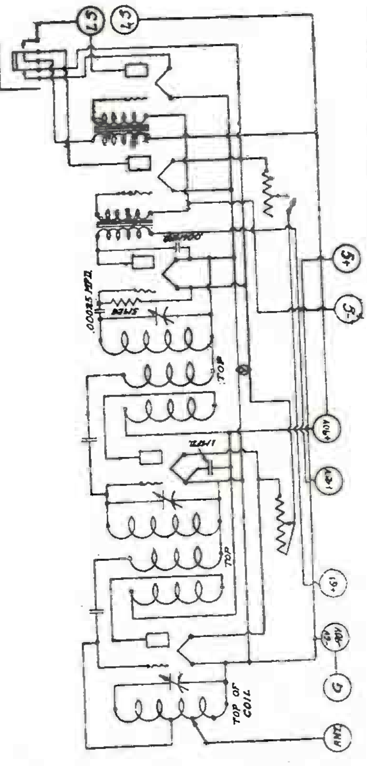

MODEL 71 NEUT RECEIVER

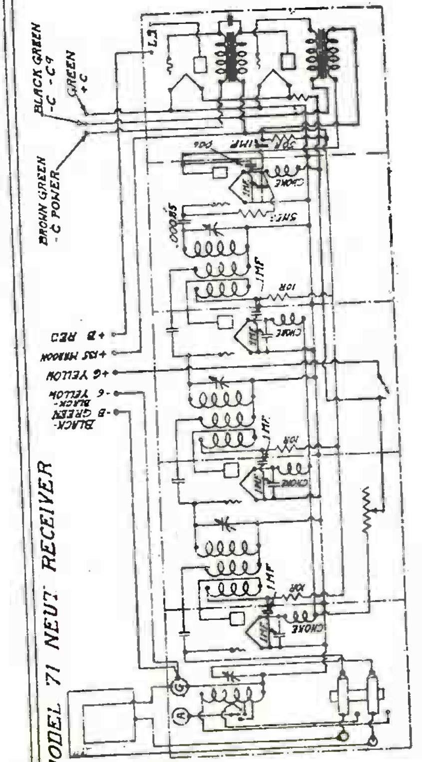

KING MFG. CORP.

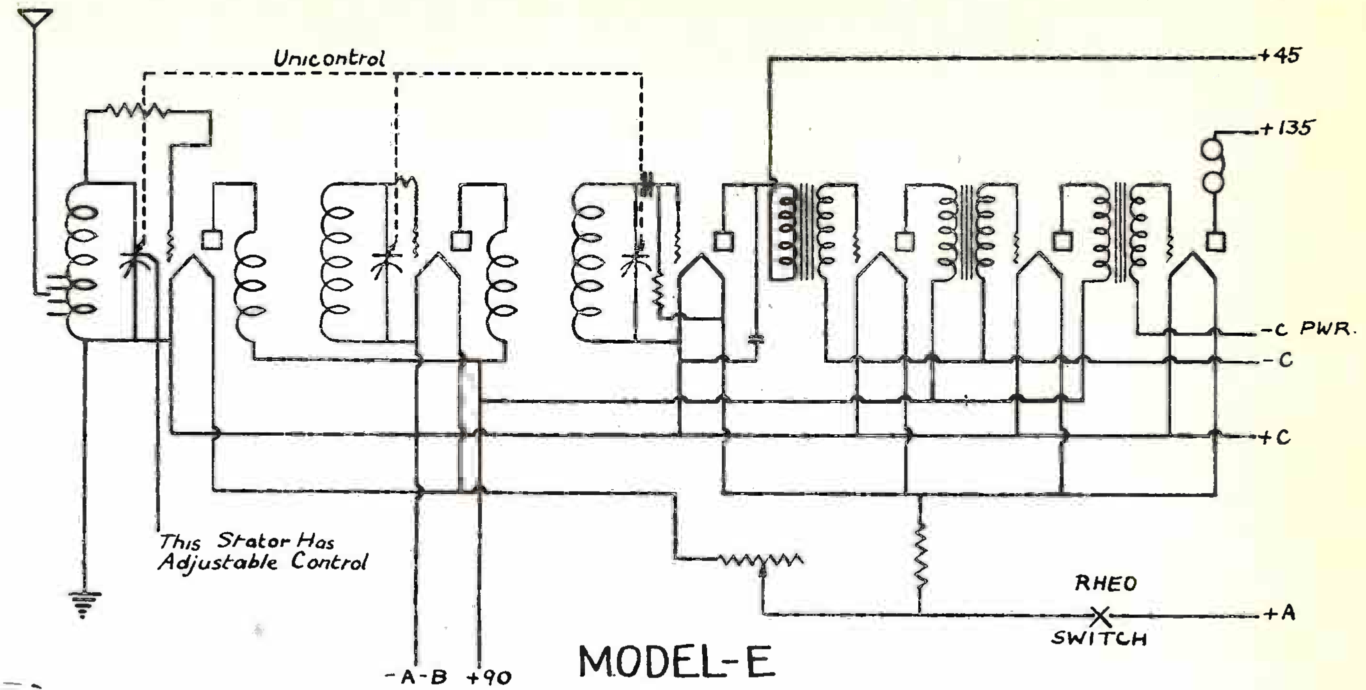

MODEL-E

MODEL 80. By-pass condensers on 1st and 3rd. A.F. transformers are .1 mf. capacity.

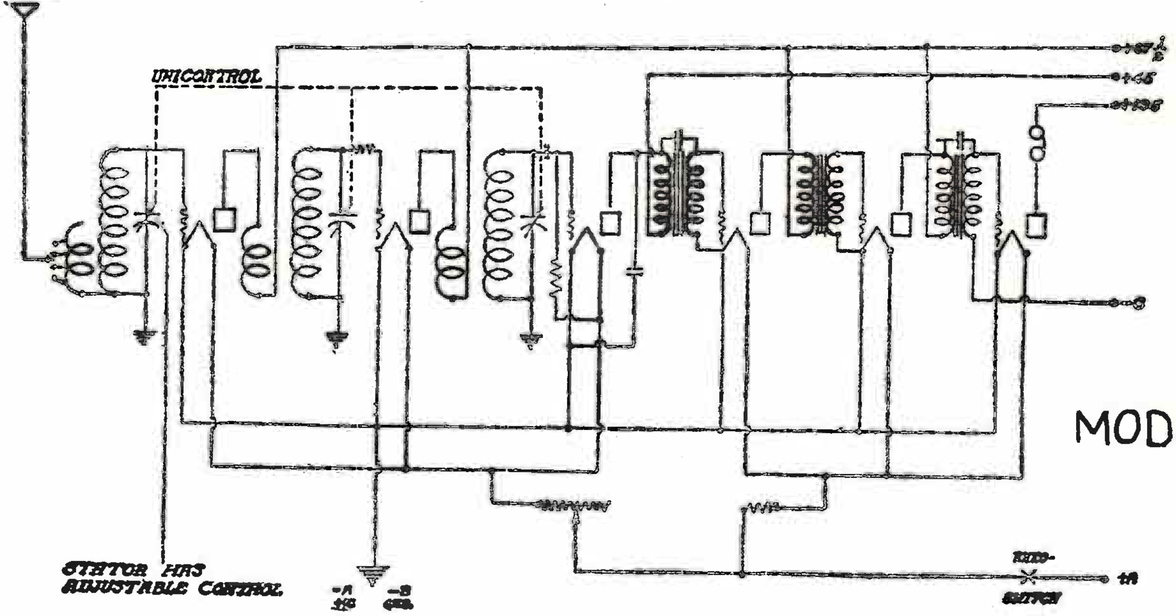

MODEL-80

MODEL 81. Plate resistors in R.F. circuit are 1000 ohms each; in detector circuit, 100,000 ohms. By-pass condensers in R.F. cans and A.F. circuit are .1 mf. capacity.

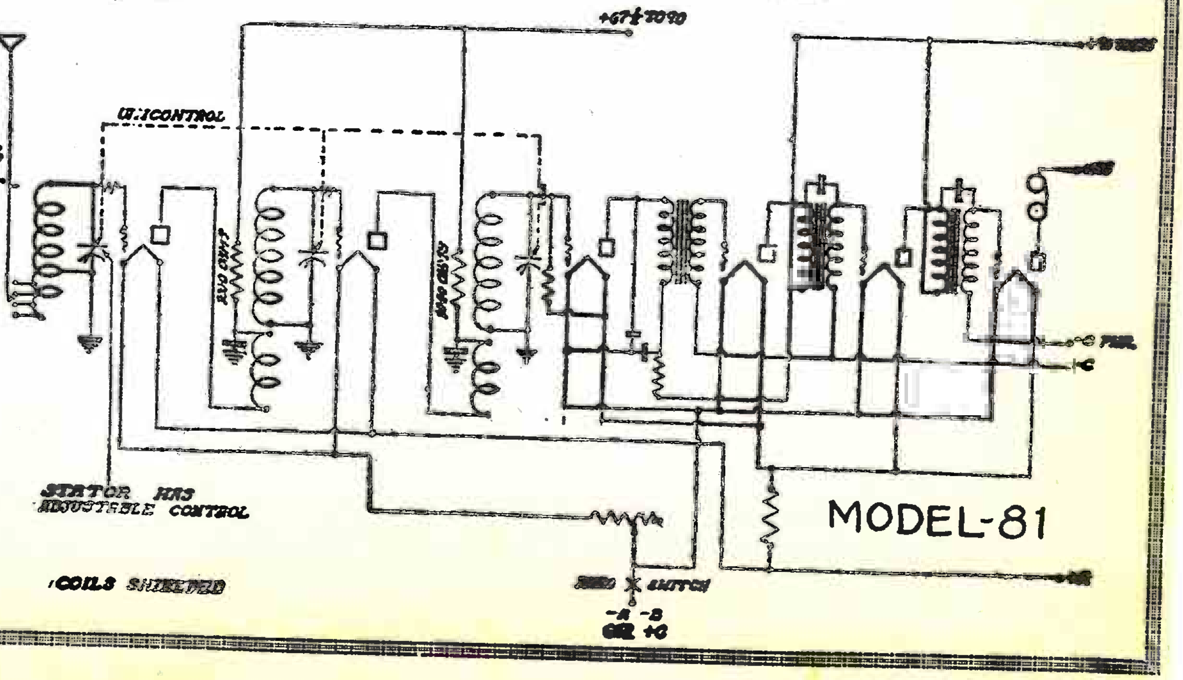

MODEL-81

KING MFG. CORP.

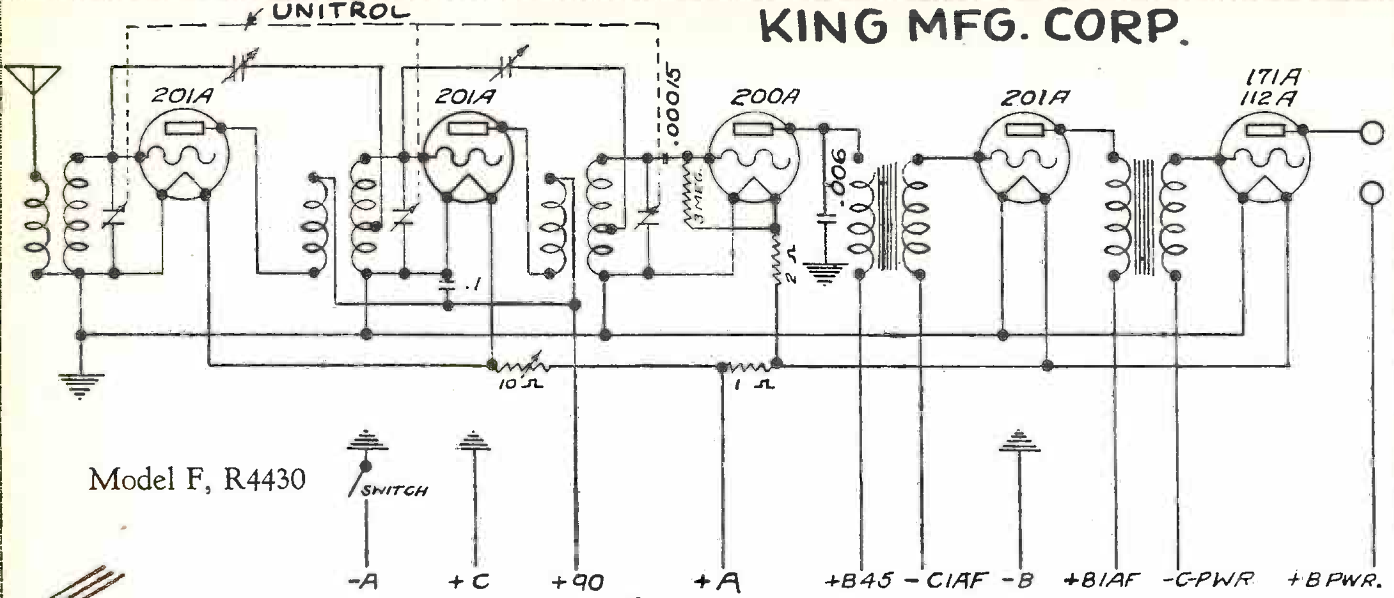

Model F, R4430

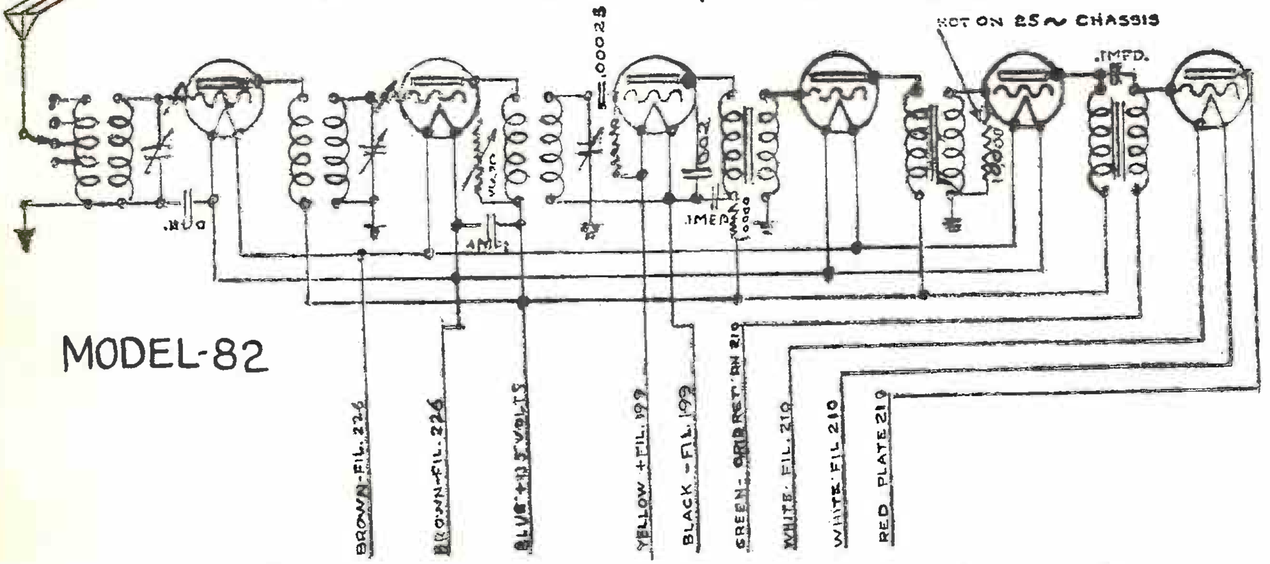

MODEL-82

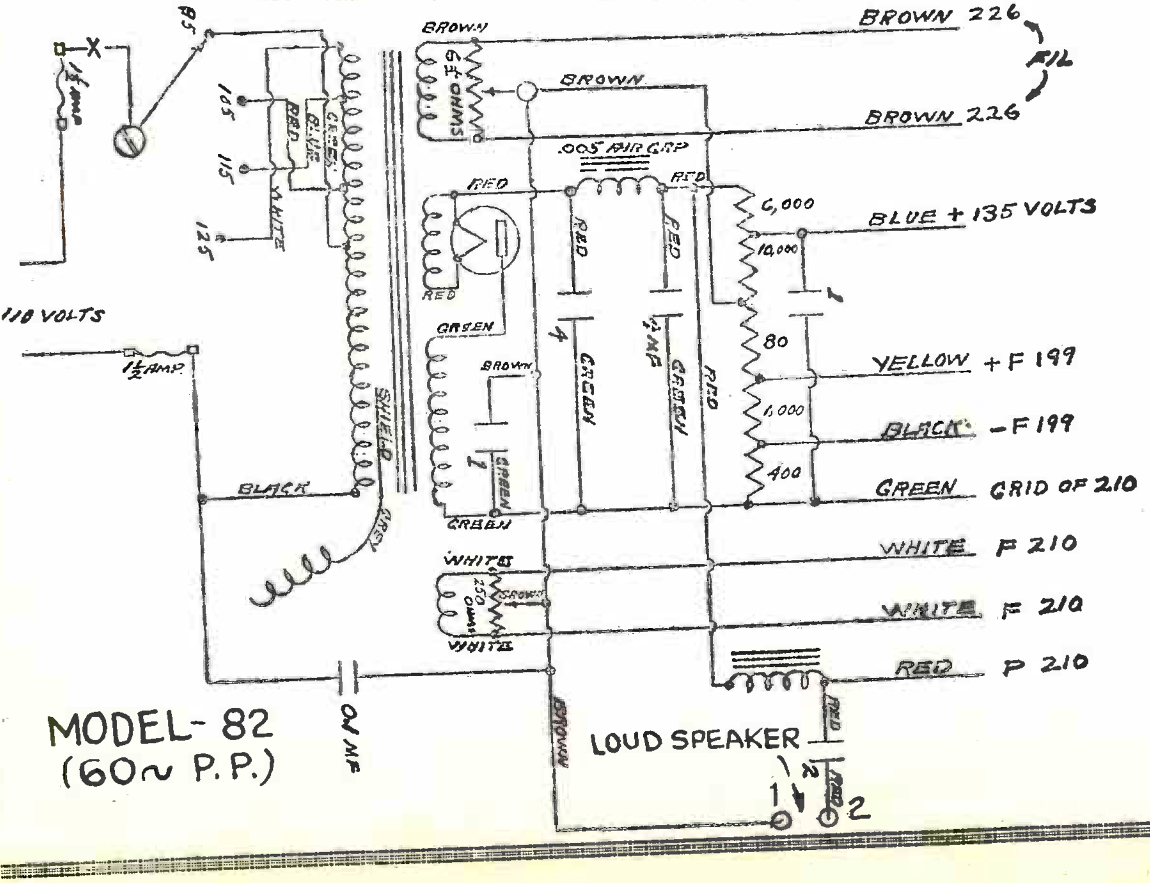

MODEL- 82
(60~ P.P.)

KING MFG. CORP.

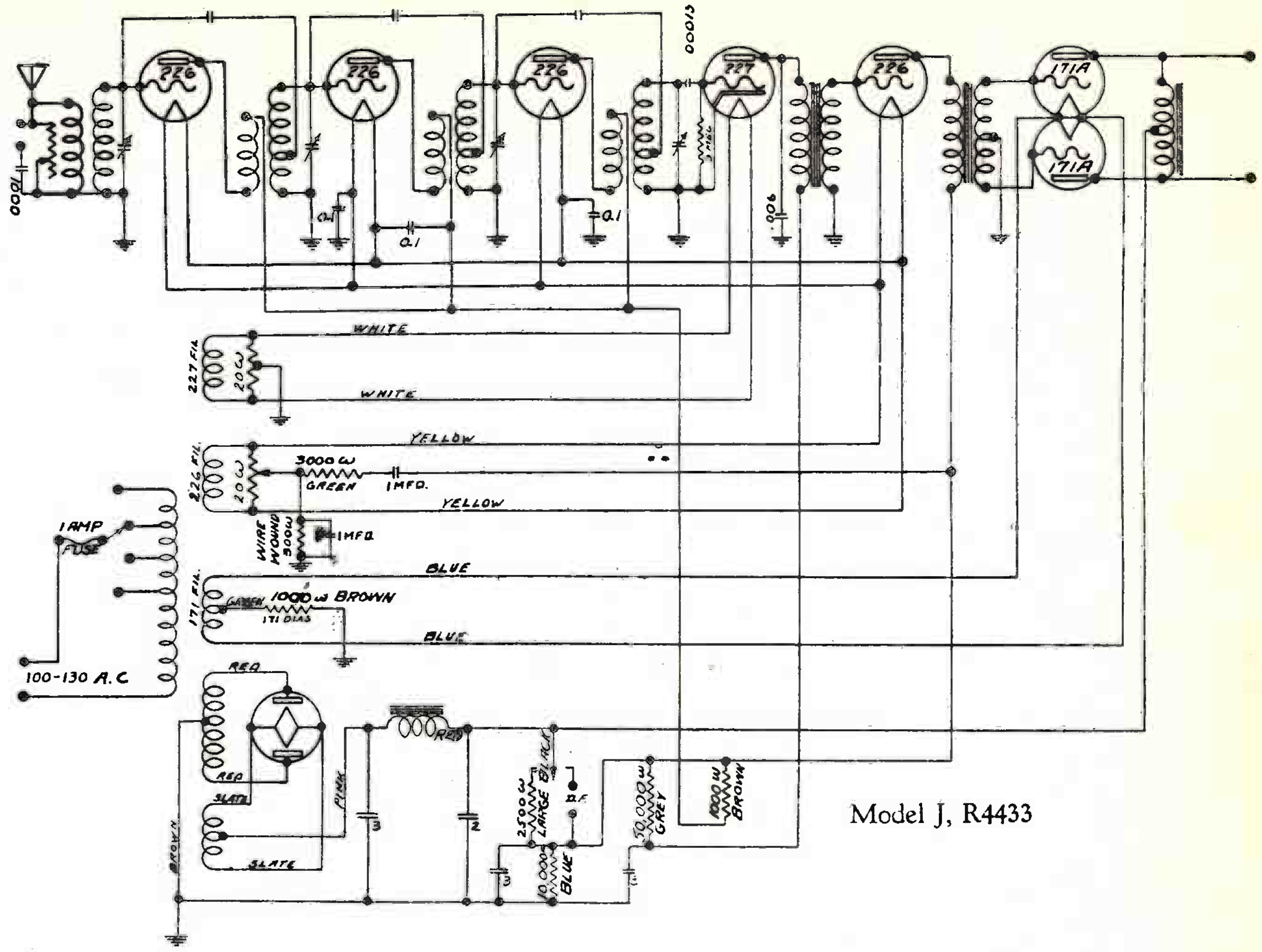

Model J, R4433

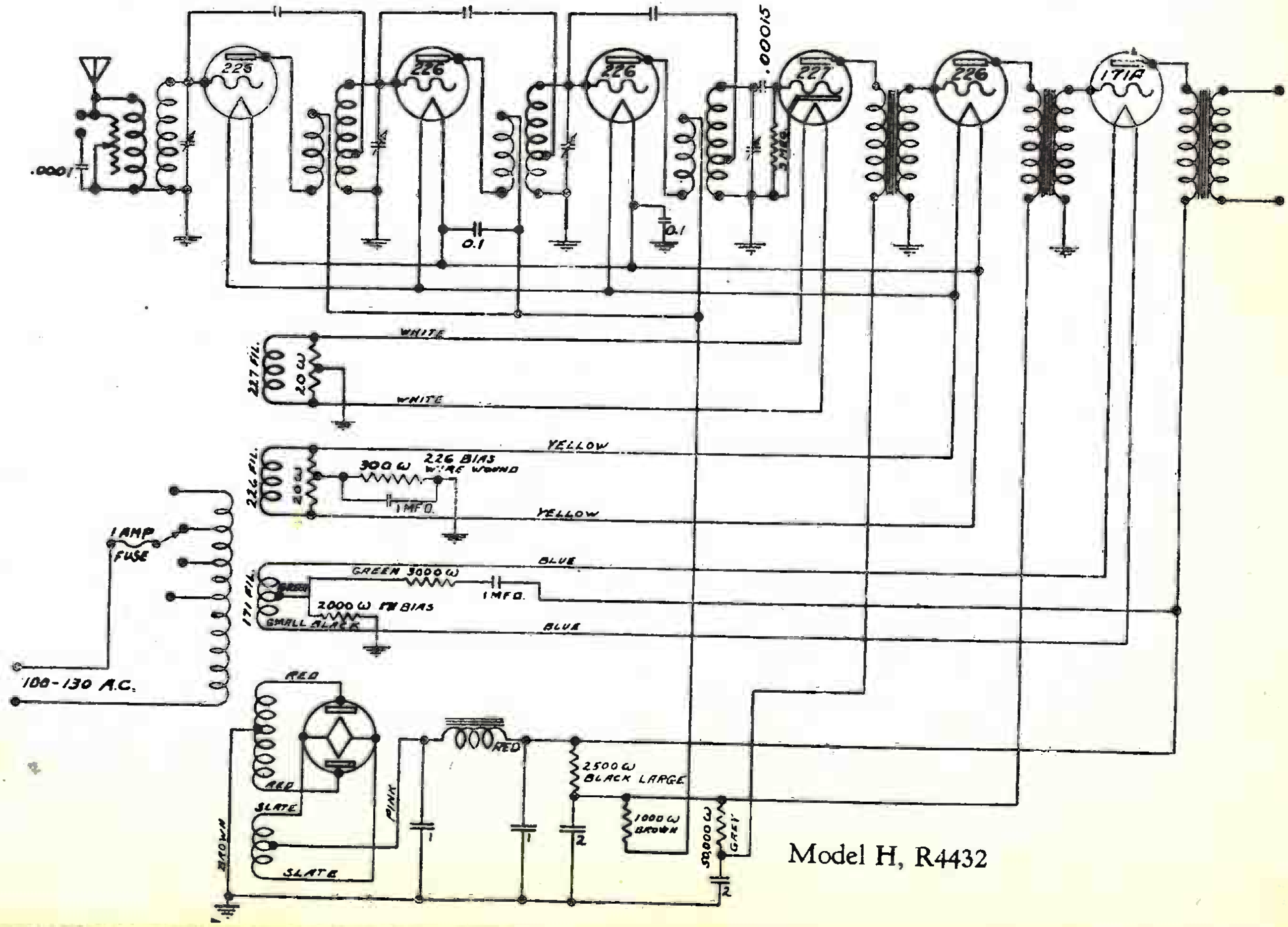

Model H, R4432

KING MFG. CORP.

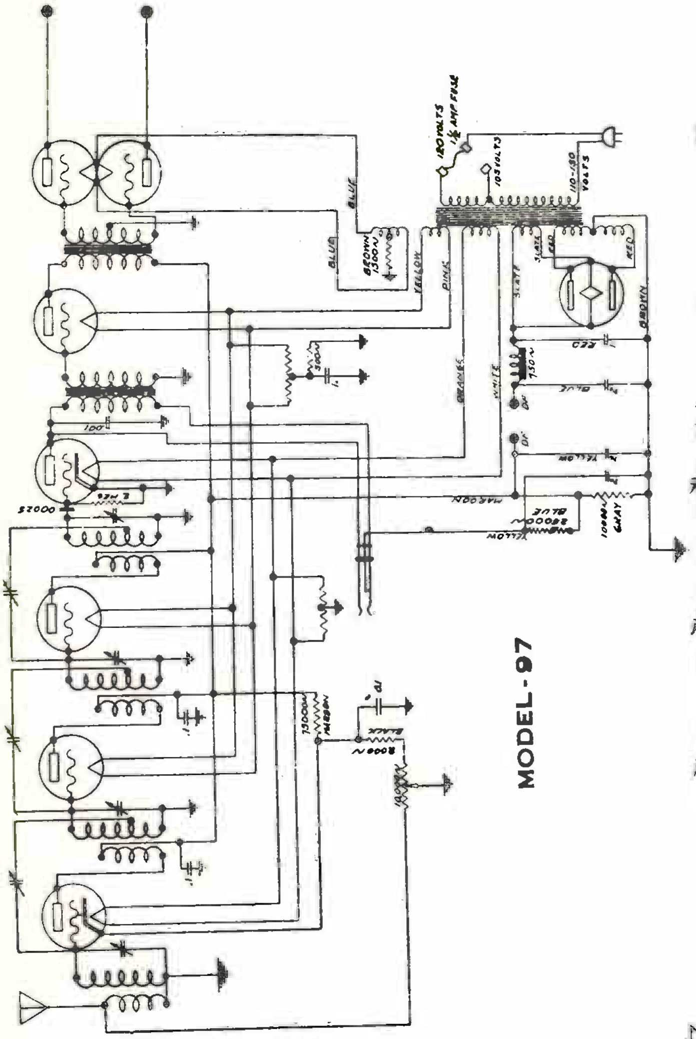

MODEL-97

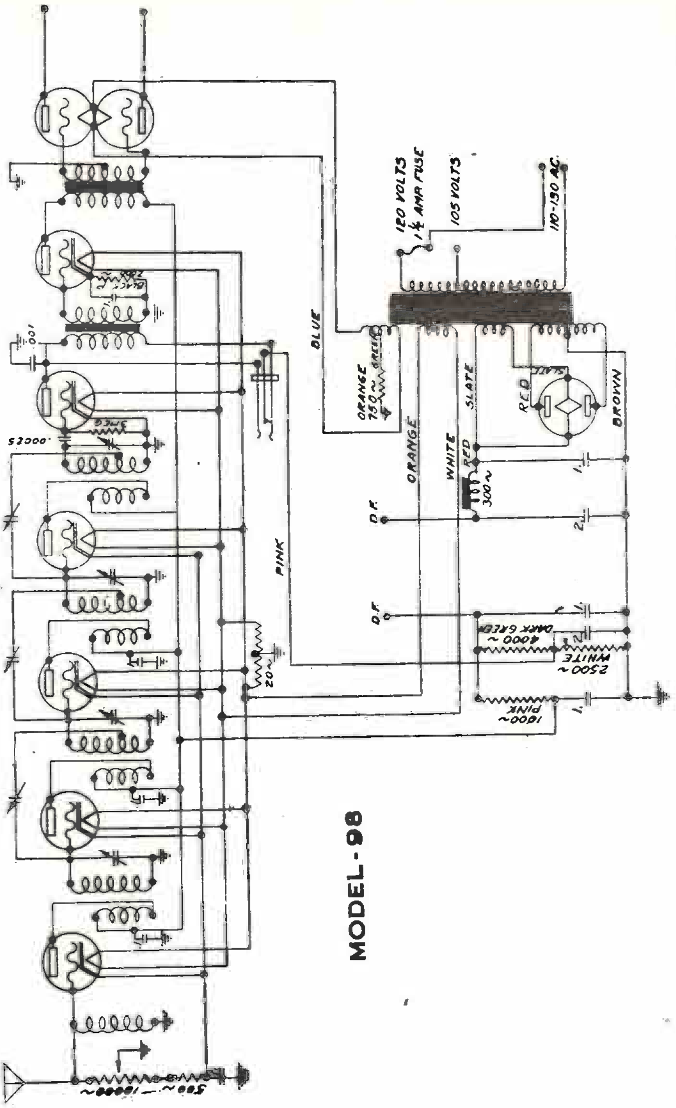

MODEL-98

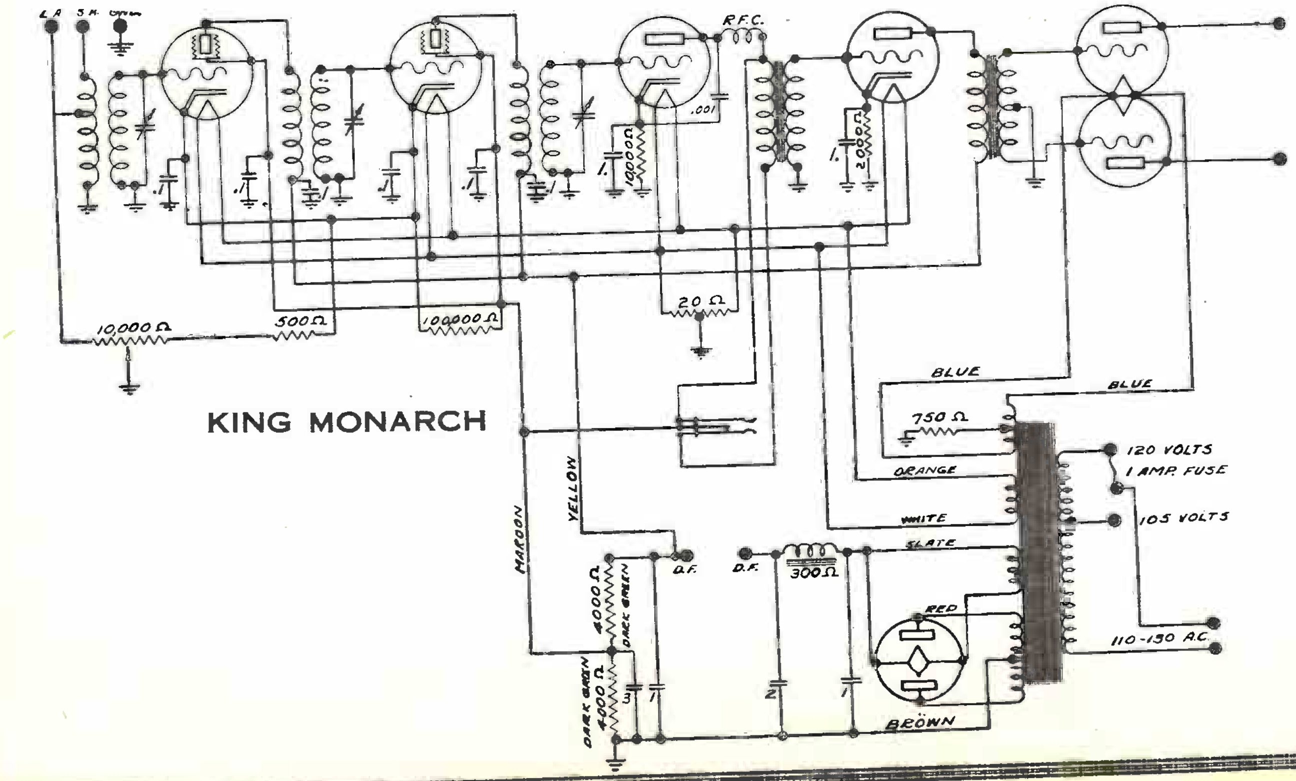

KING MONARCH

KING MFG. CORP.

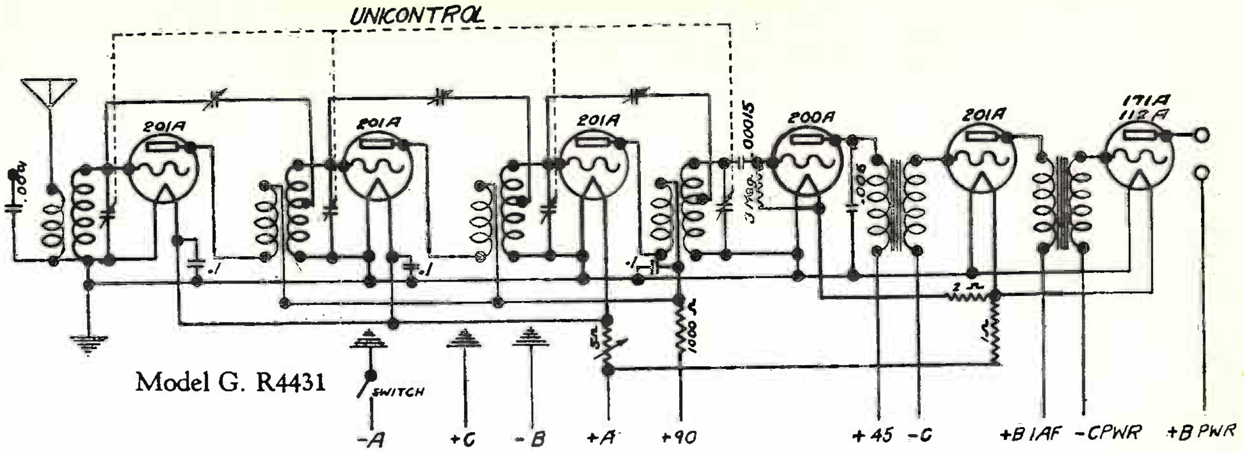

Model G. R4431

POWER PACK WIRING KING ROYAL

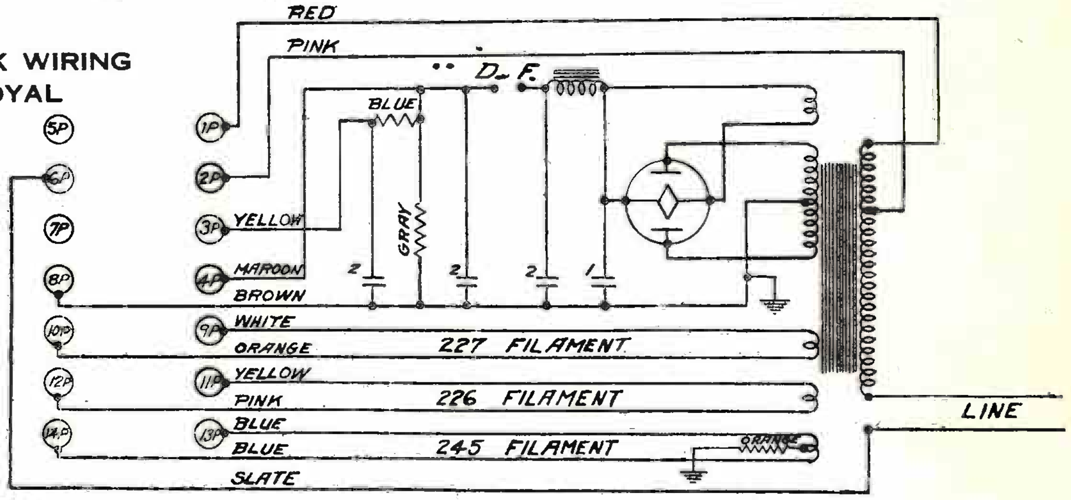

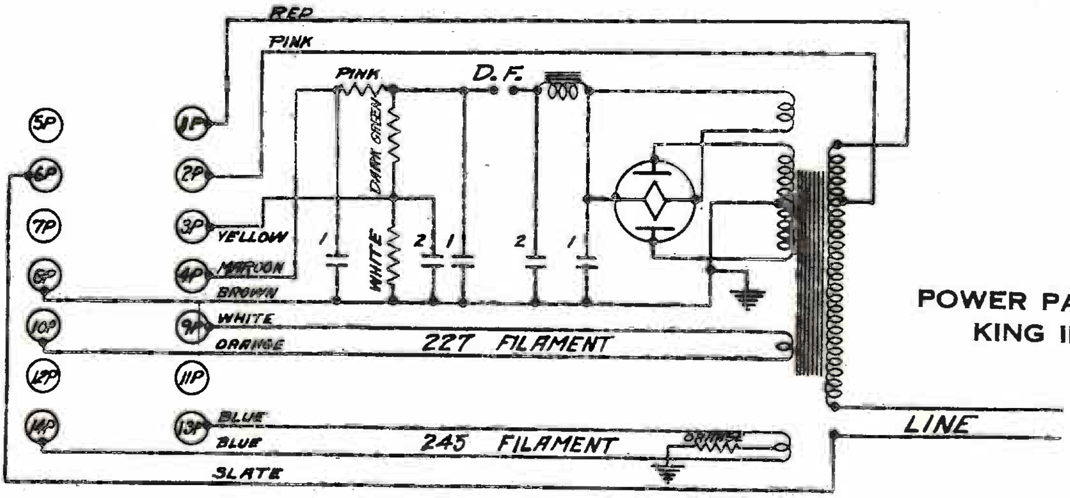

POWER PACK WIRING KING IMPERIAL

POWER PACK WIRING KING MONARCH

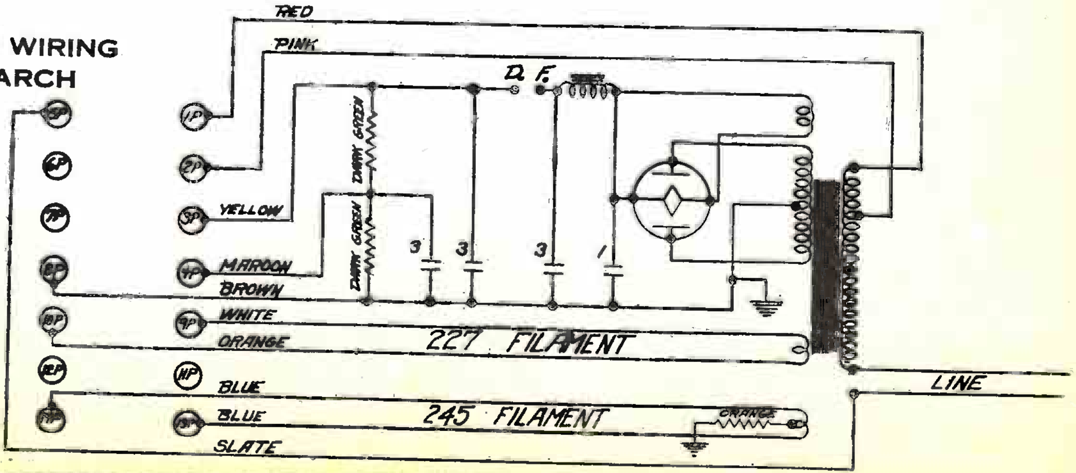

KOLSTER RADIO CORP.

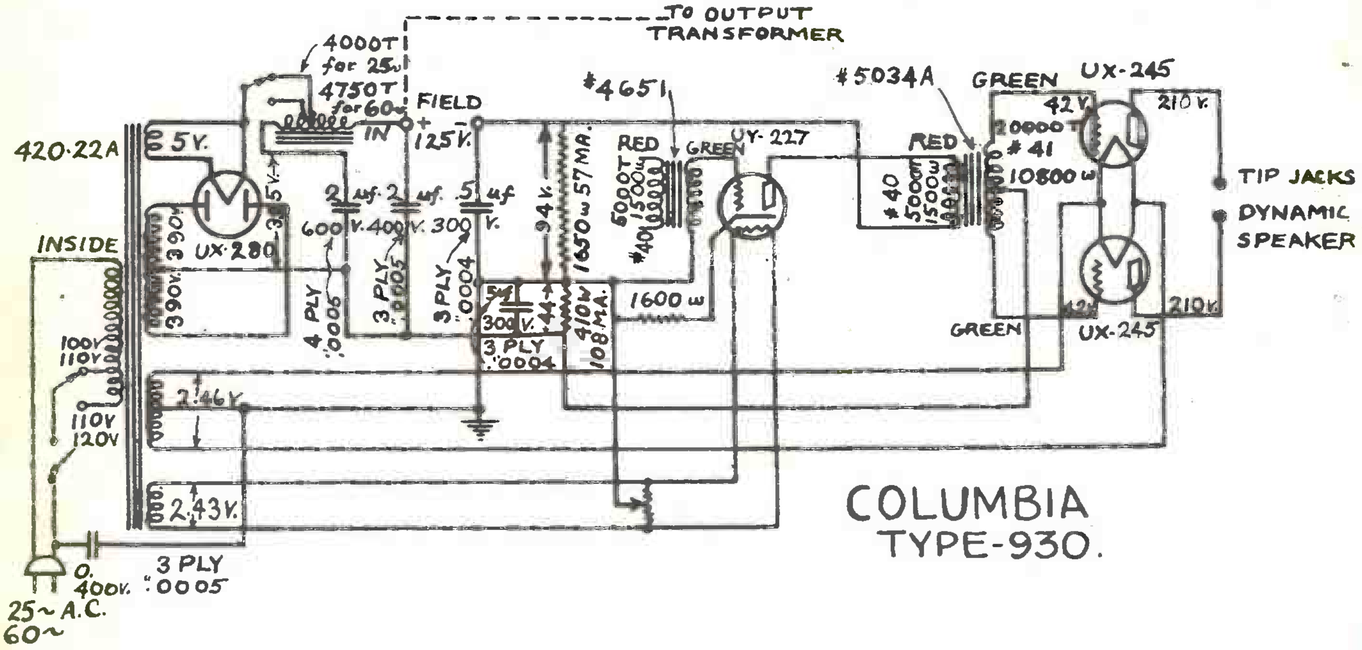

COLUMBIA
TYPE-930.

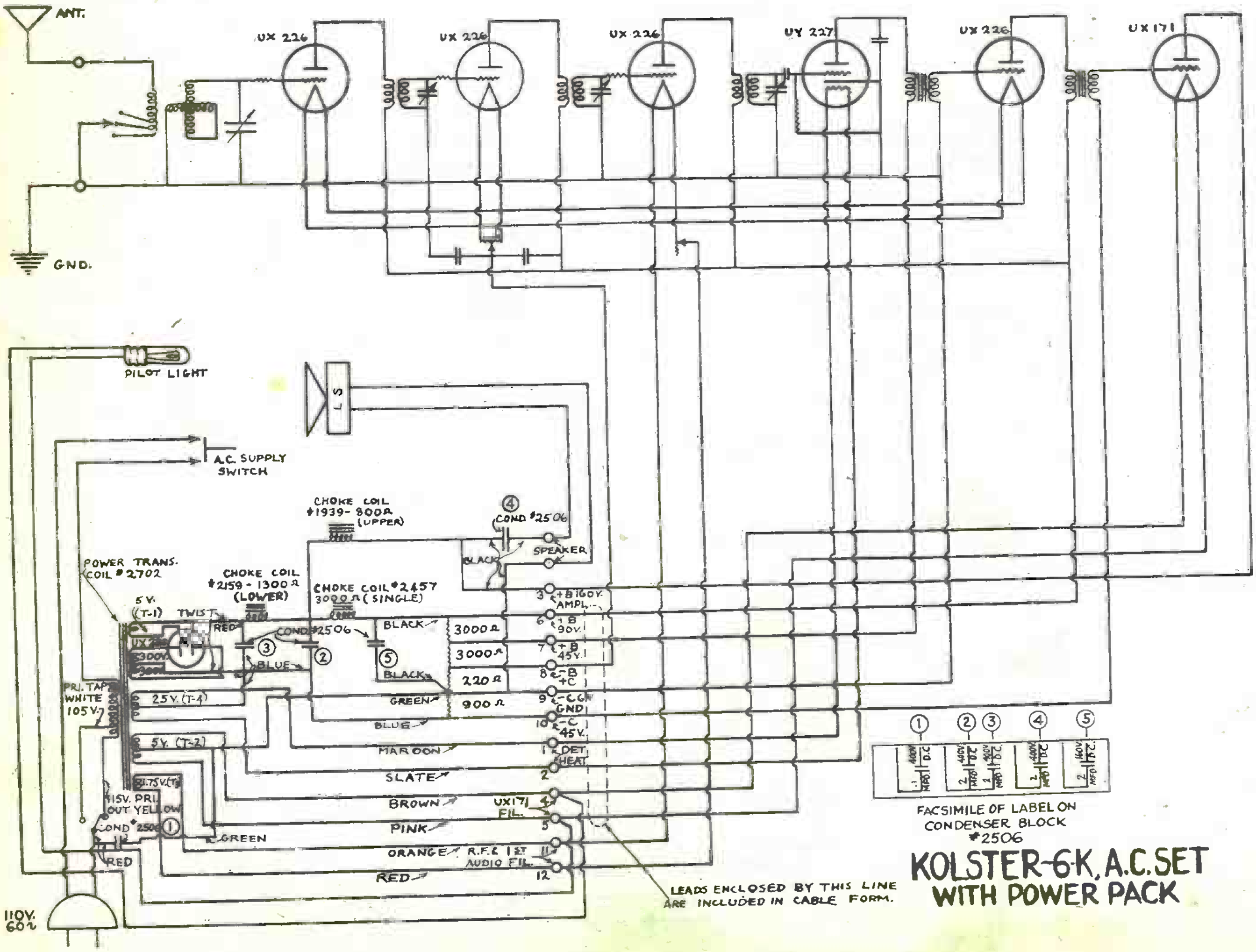

KOLSTER-6K, A.C. SET
WITH POWER PACK

KOLSTER RADIO CORP.

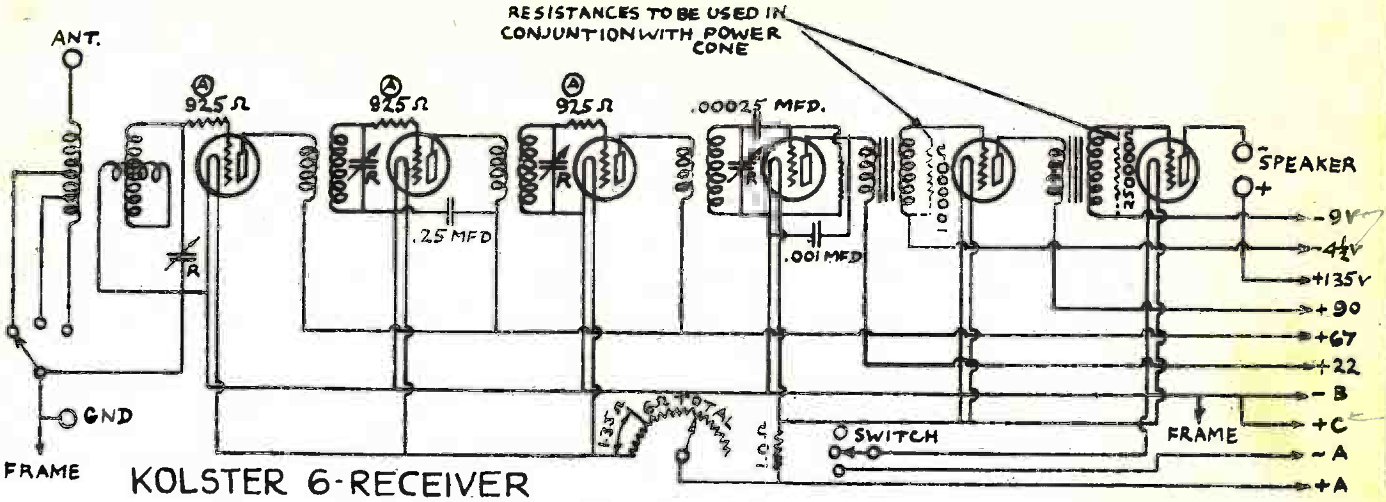

KOLSTER 6-RECEIVER

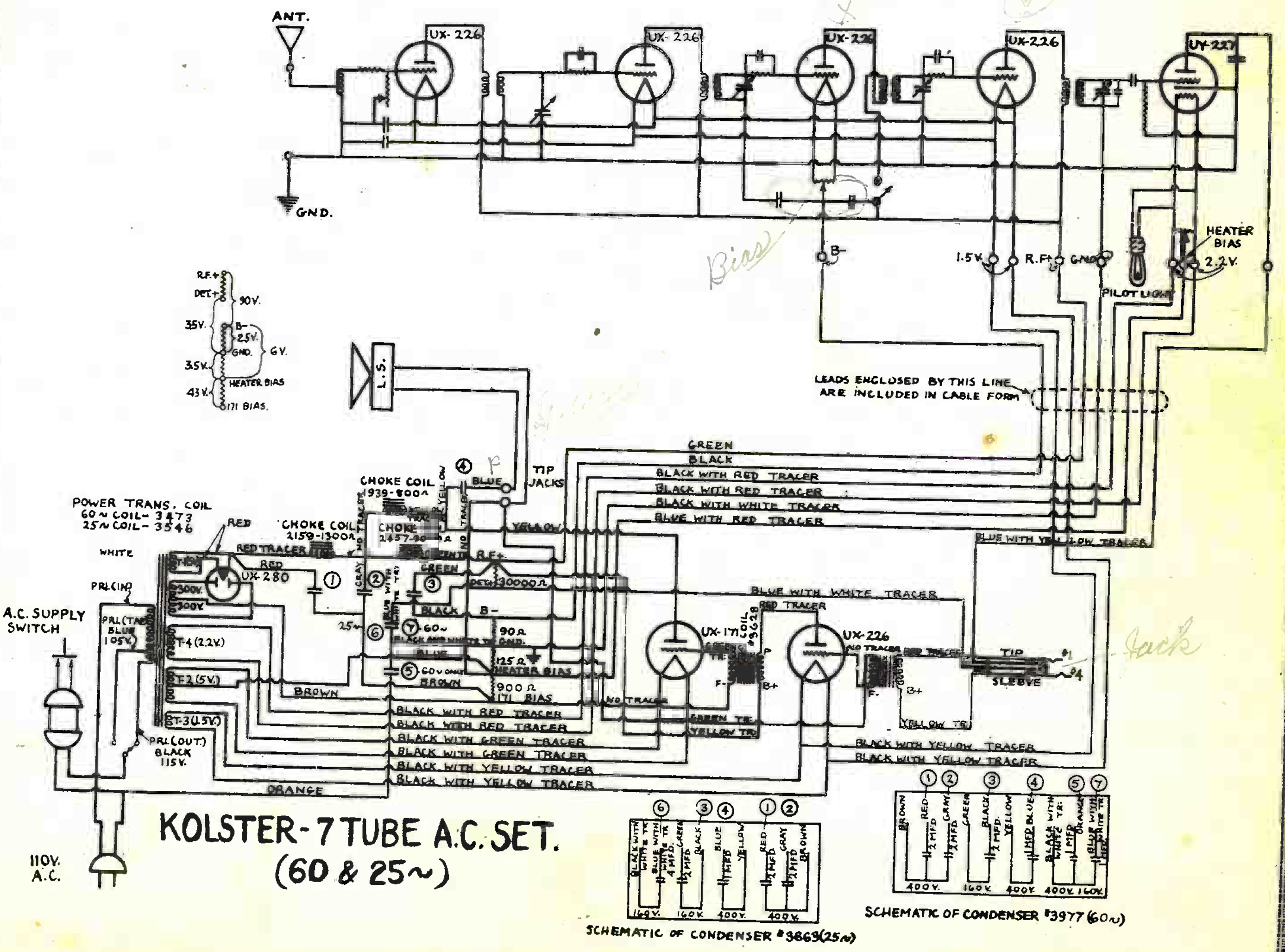

KOLSTER-7 TUBE A.C. SET.
(60 & 25~)

SCHEMATIC OF CONDENSER #3869(25~)

SCHEMATIC OF CONDENSER #3977(60~)

KOLSTER RADIO CORP.

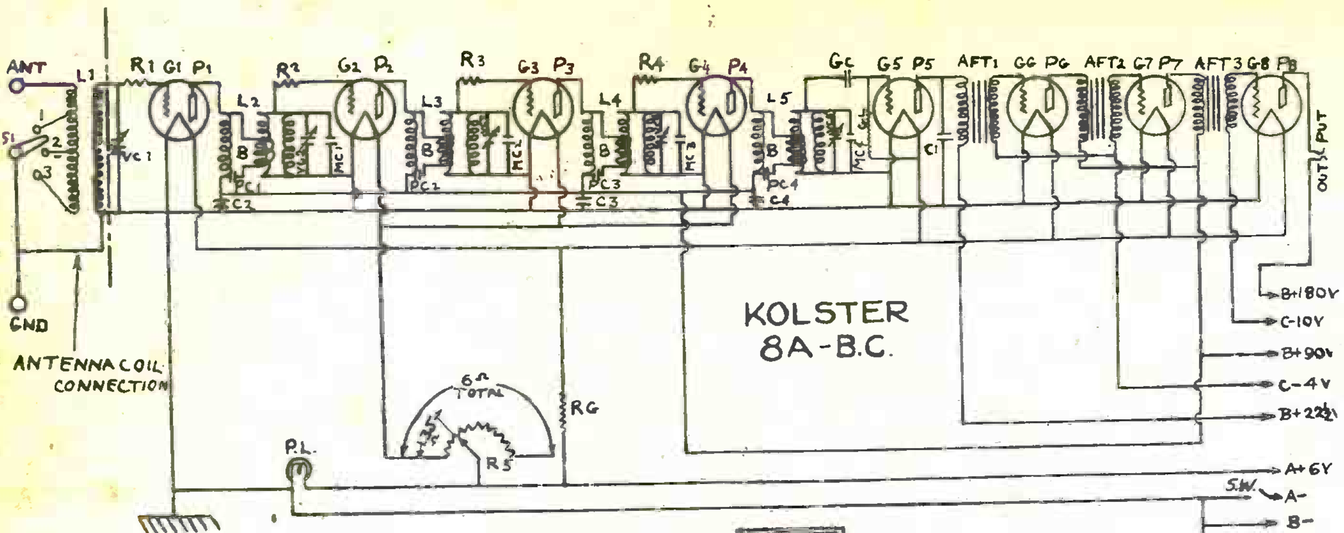

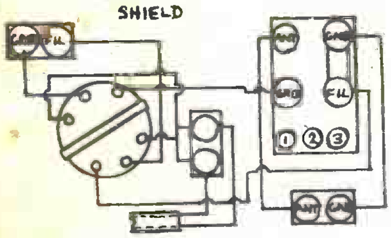

LOOP ANTENNA COIL SWITCH

MODEL 8-B

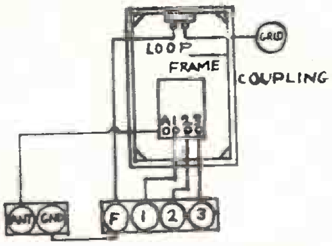

LOOP- ANTENNA COIL CONNECTIONS

MODEL 8-C

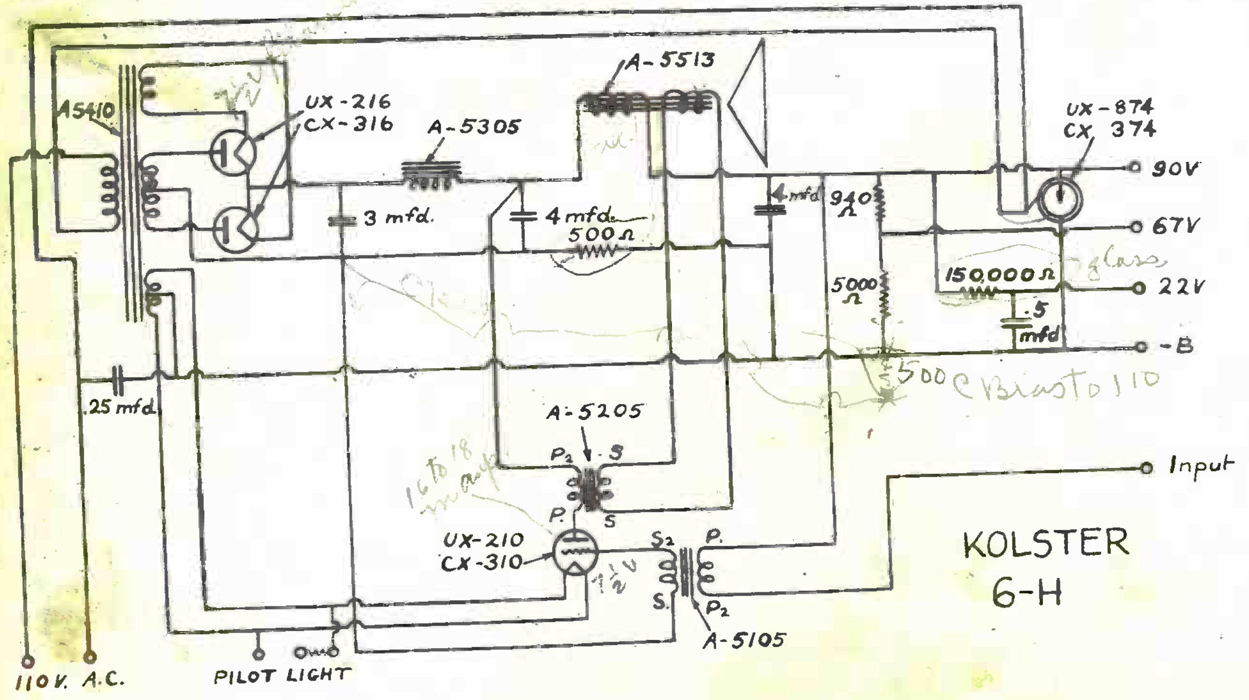

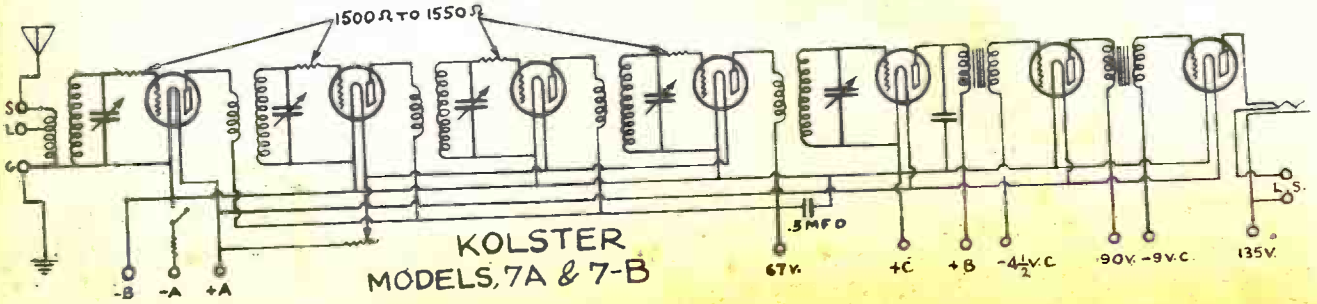

KOLSTER RADIO CORP.

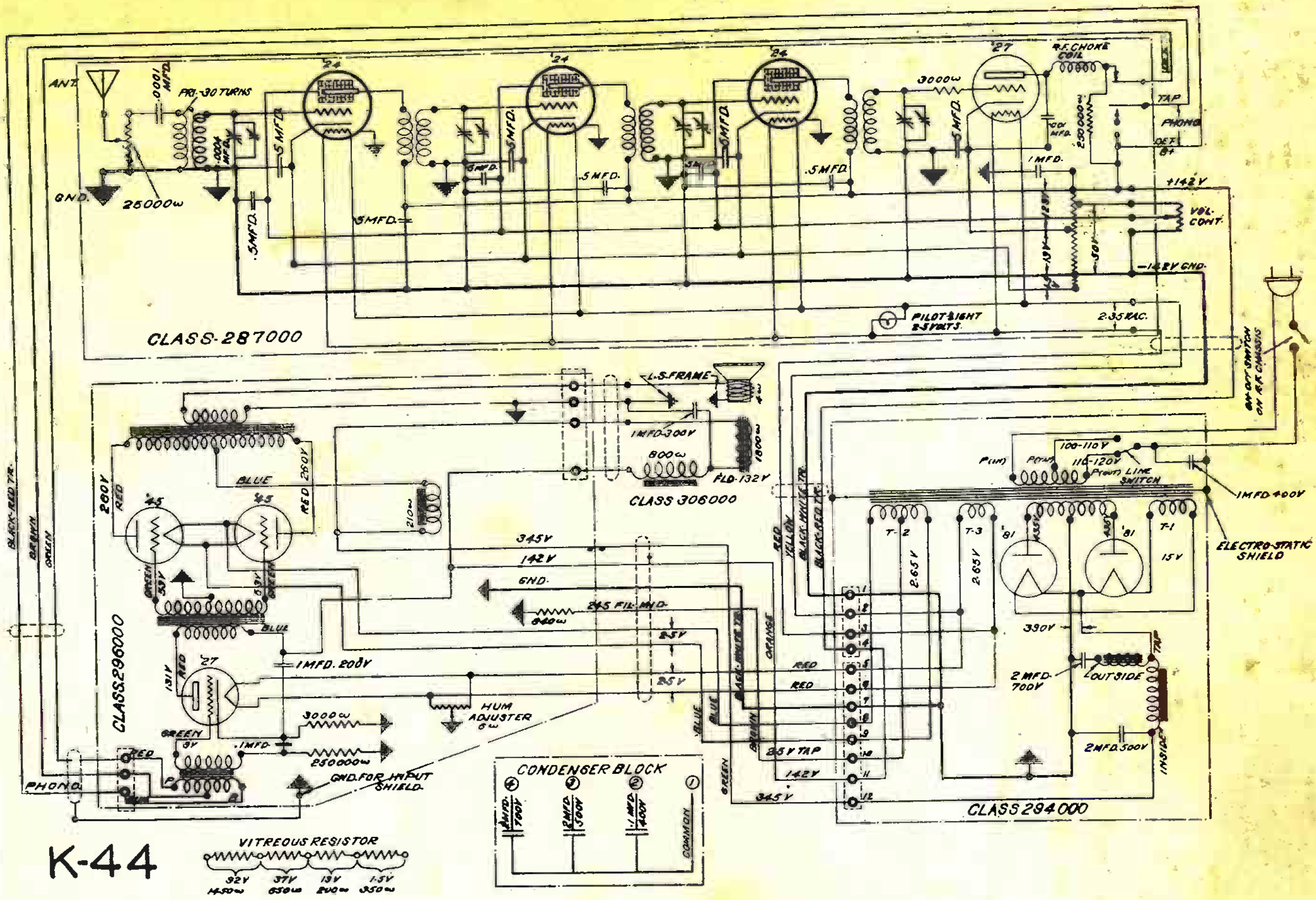

K-44

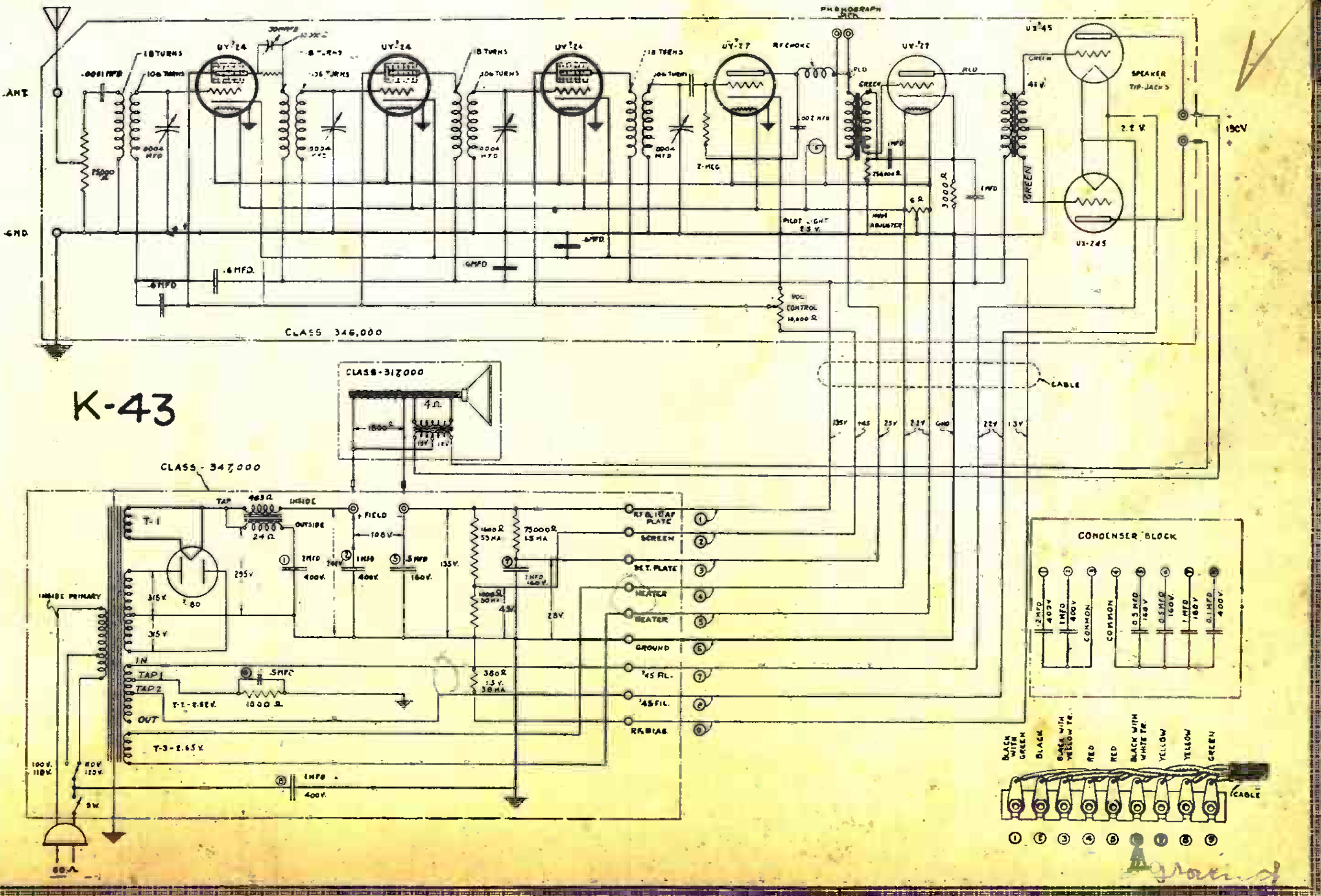

K-43

KOLSTER RADIO CORP.

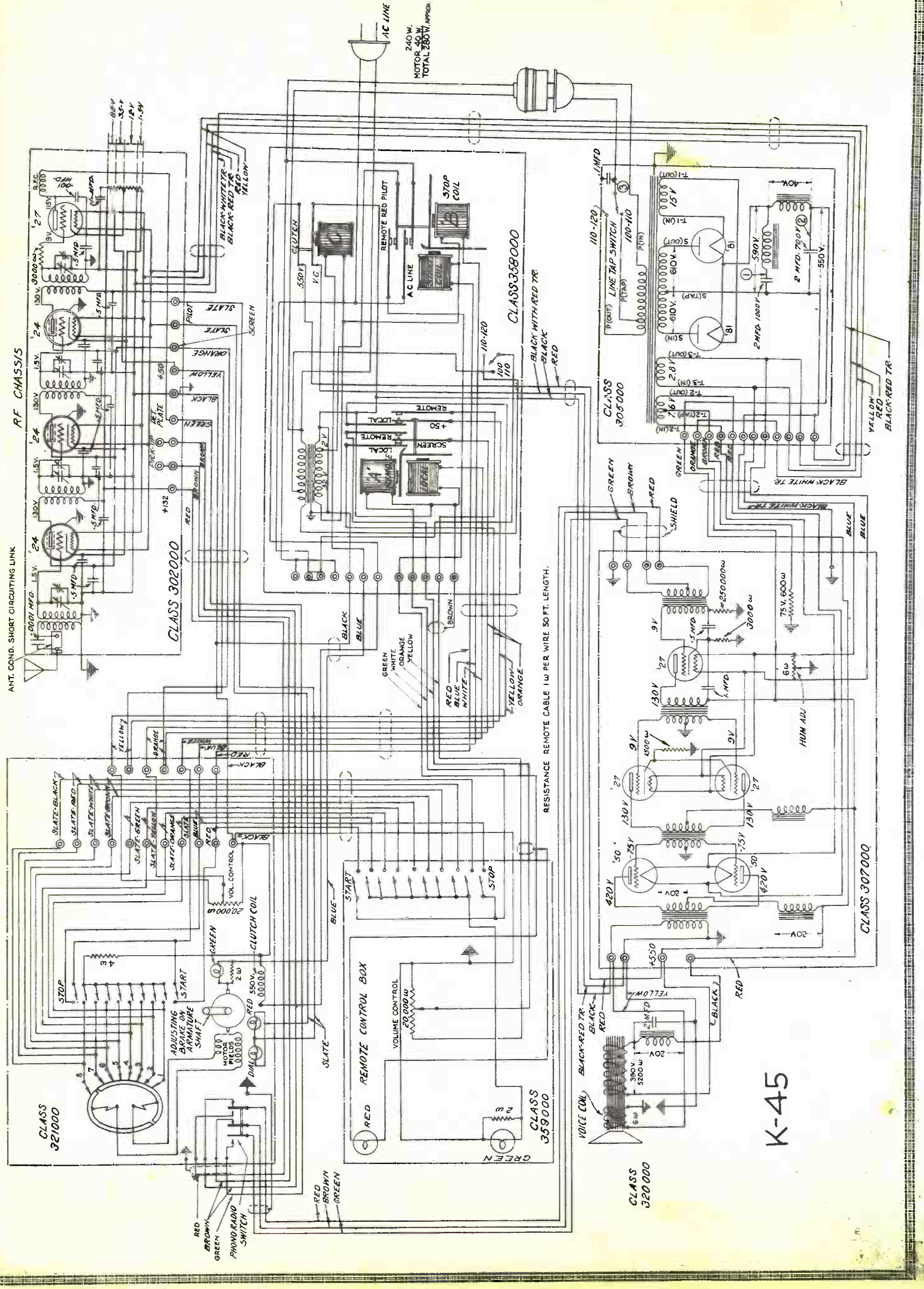

K-45

KOLSTER RADIO CORP.

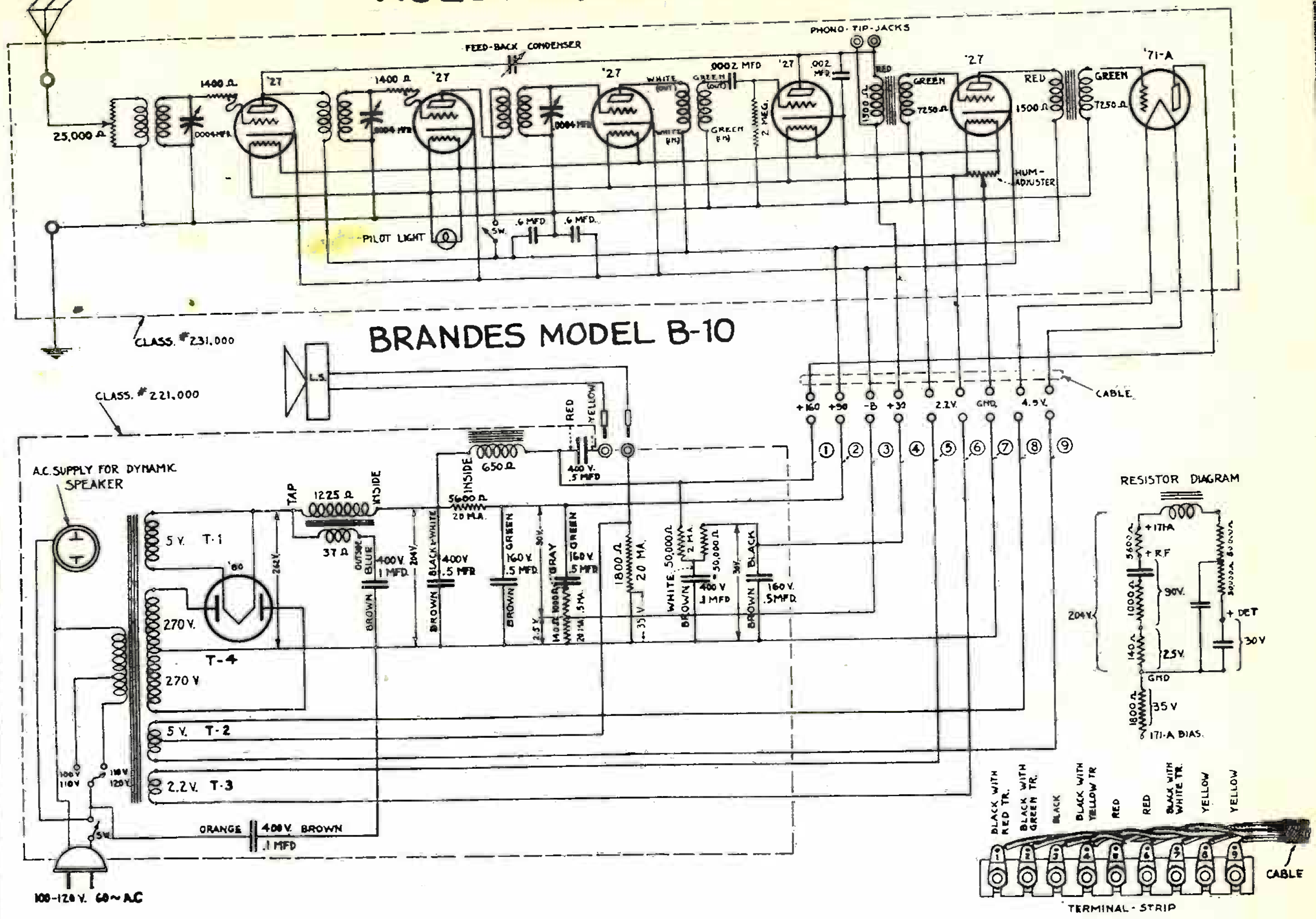

BRANDES MODEL B-10

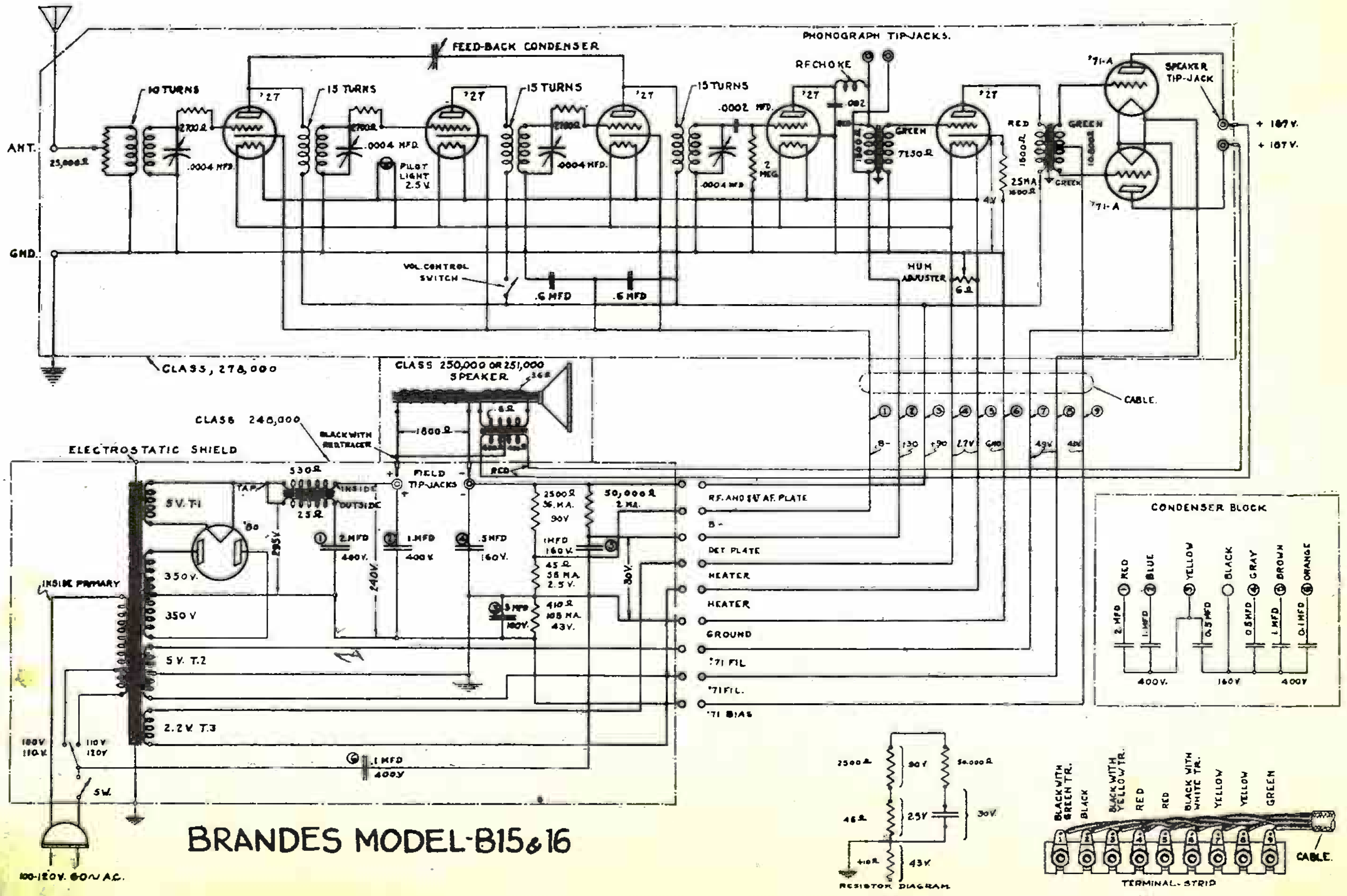

BRANDES MODEL-B15&16

KOLSTER RADIO CORP.

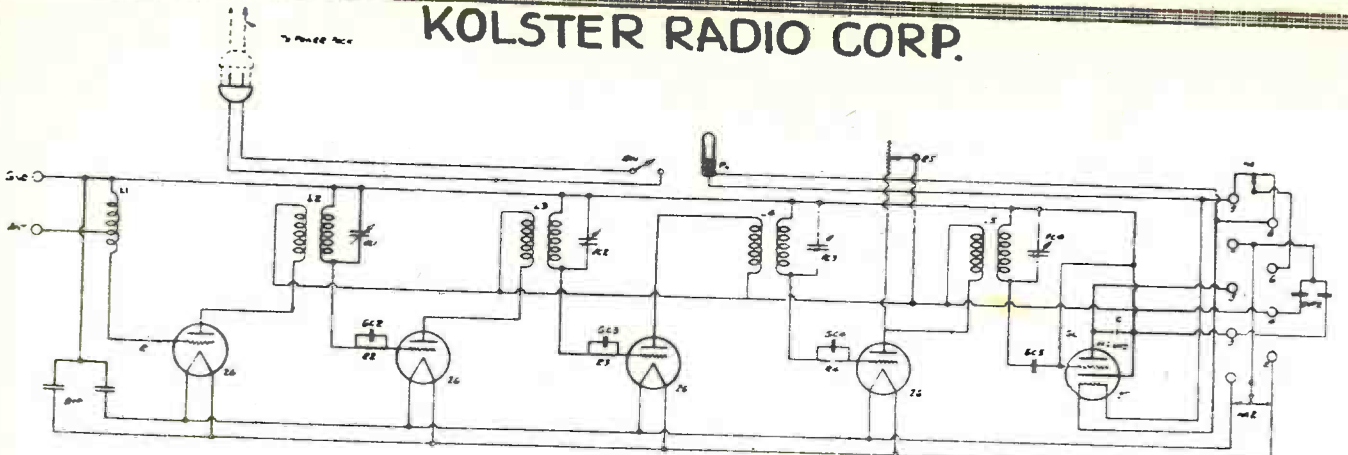

Tuning chassis for seven tube sets.

USED IN K-21, K23,
K-24 AND K 28 SETS

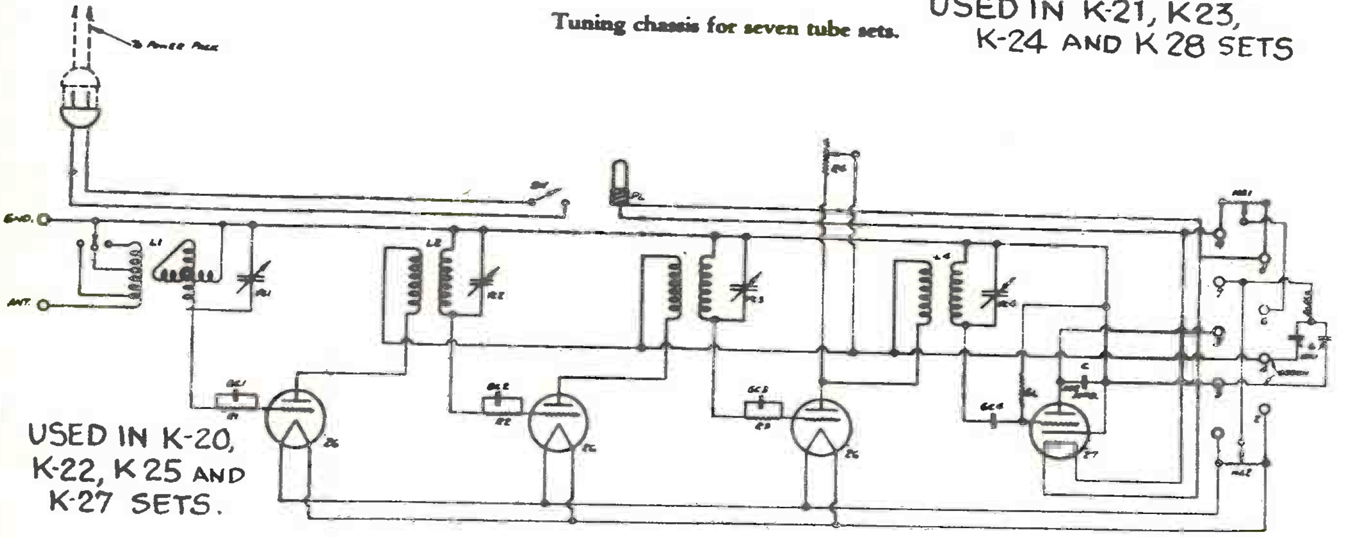

USED IN K-20,
K-22, K 25 AND
K-27 SETS.

Schematic diagram of the four tube chassis as used with six tube sets.

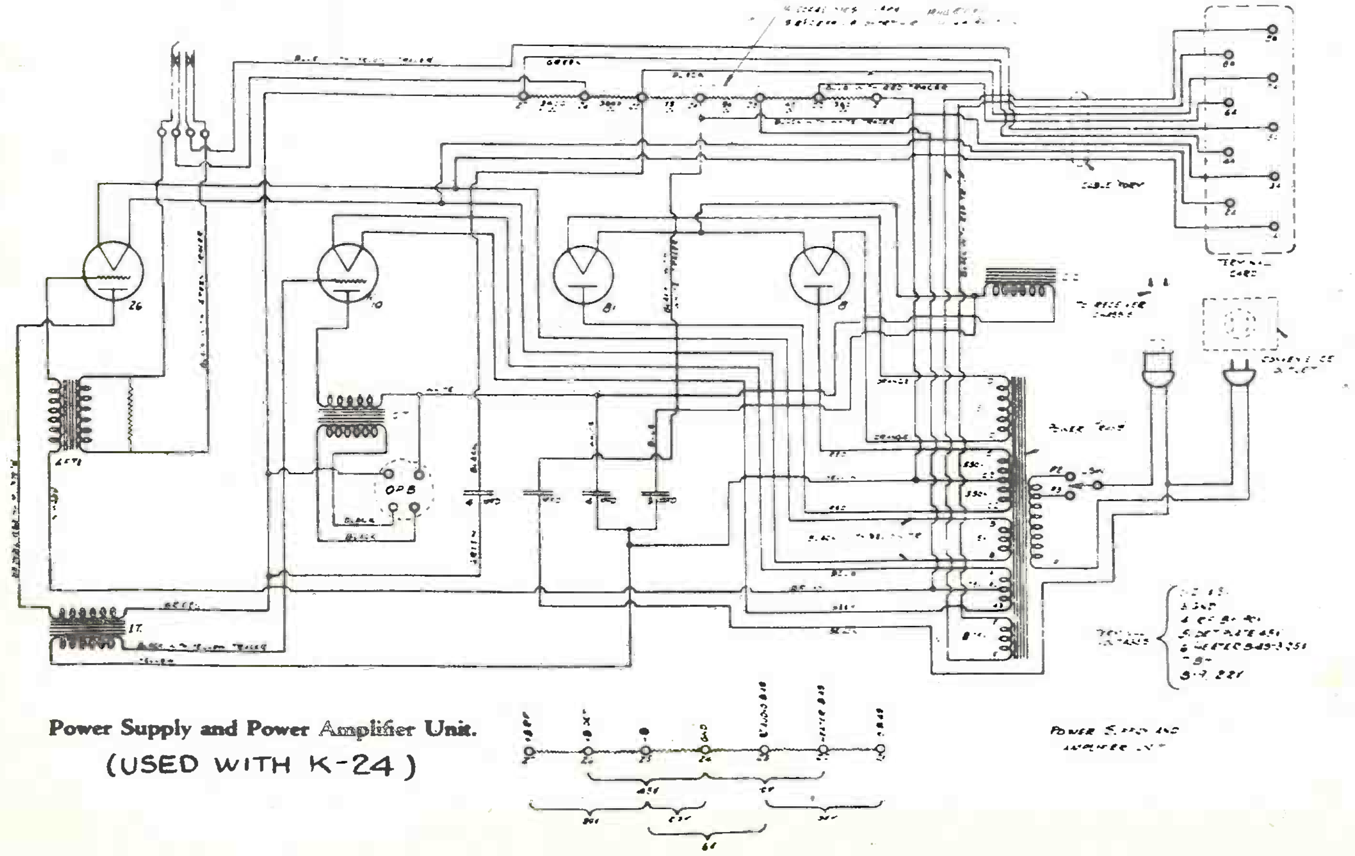

Power Supply and Power Amplifier Unit.
(USED WITH K-24)

Mc MILLAN RADIO CO.

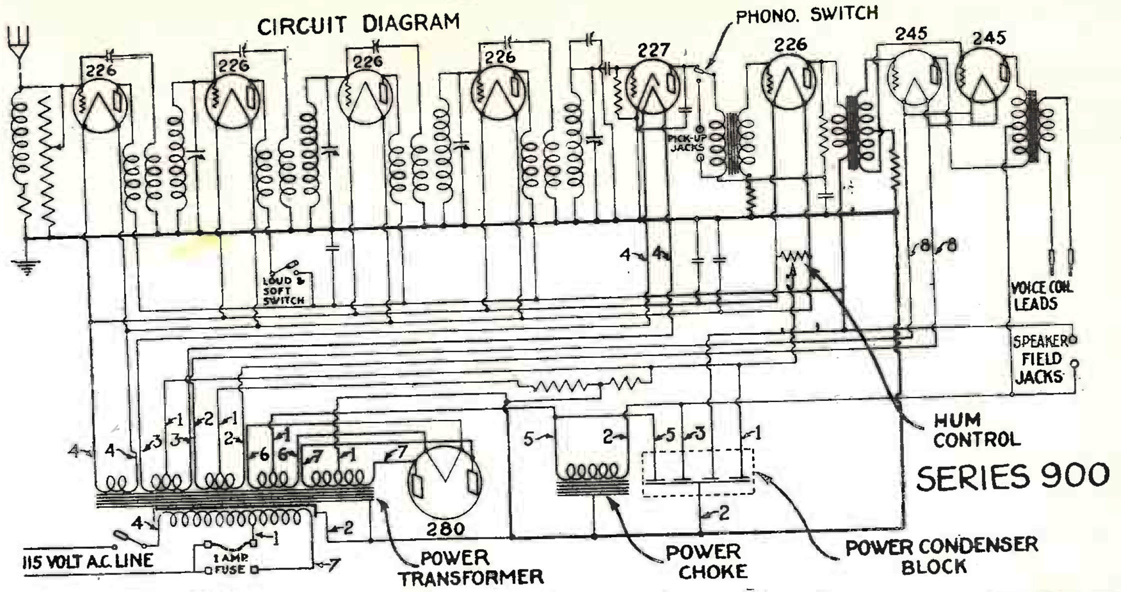

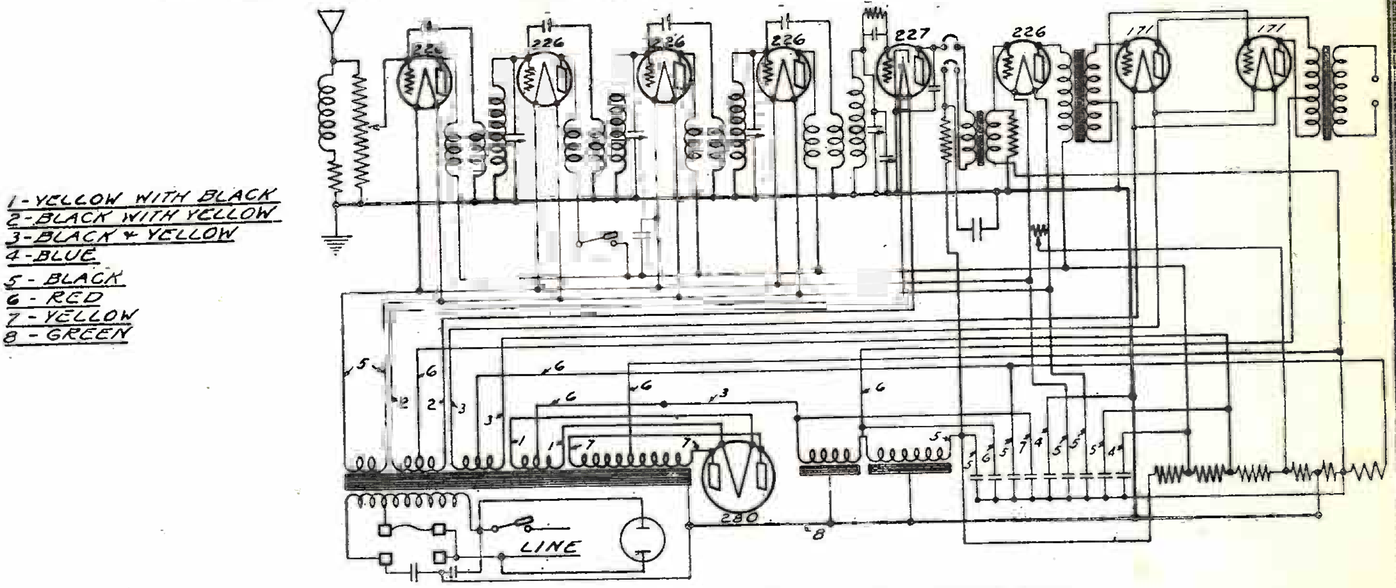

McMILLAN 8—A. C. POWER SET

Use this circuit diagram for all receivers equipped with a sealed power transformer block, or condenser block not having any brown or slate colored leads.

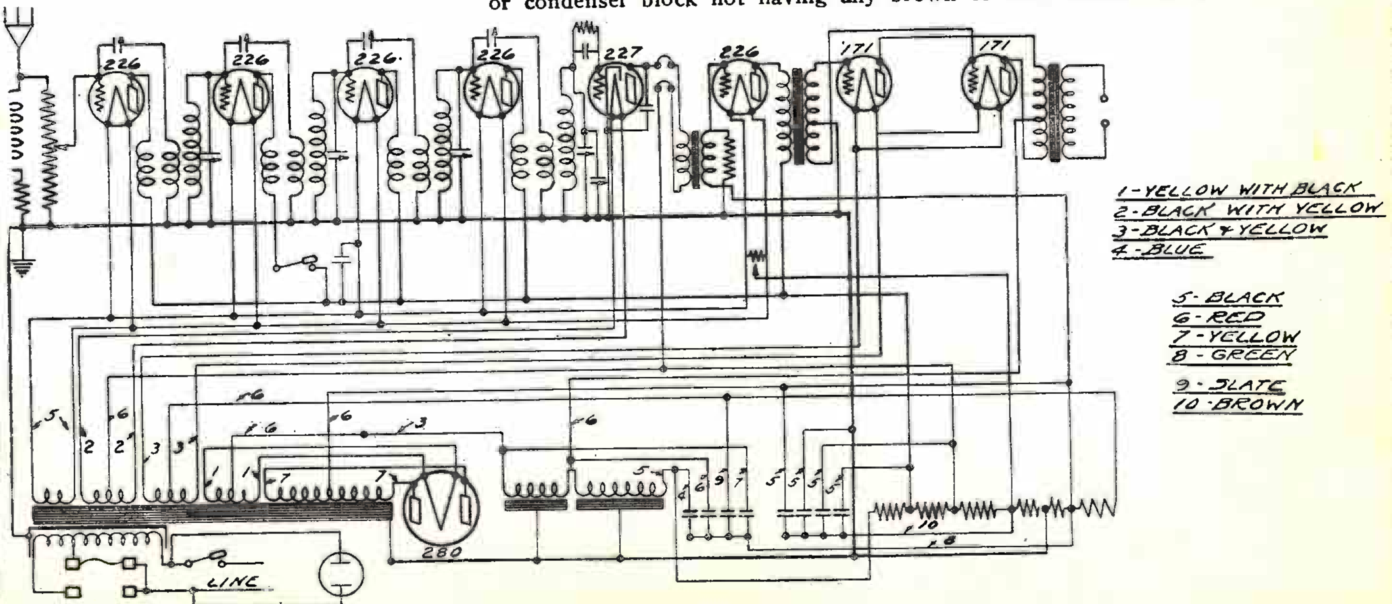

McMILLAN 8—A. C. POWER SET

Use this circuit diagram for receivers equipped with power transformer block having removable cover, or condenser block having one brown and one slate colored lead in addition to the colors used for circuit diagram shown above.

NATIONAL CARBON CO., Inc.

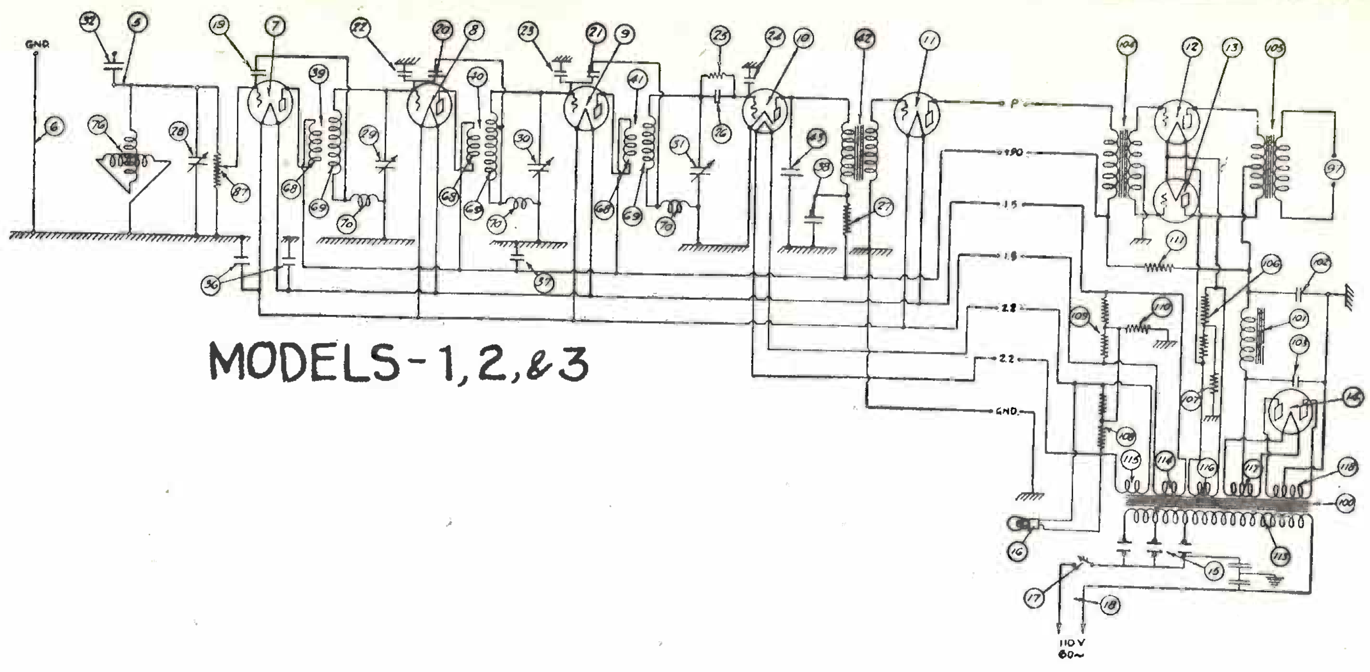

MODELS-1,2,&3

FIXED RESISTORS
SERIES-50

2290	2 megohm.
2835	4000 ohms.
3440	125000 ohms.
3004	200 ohms.
2834	3000 ohms.
2338	2500 ohms.
2996	2250 ohms.

SERIES-50

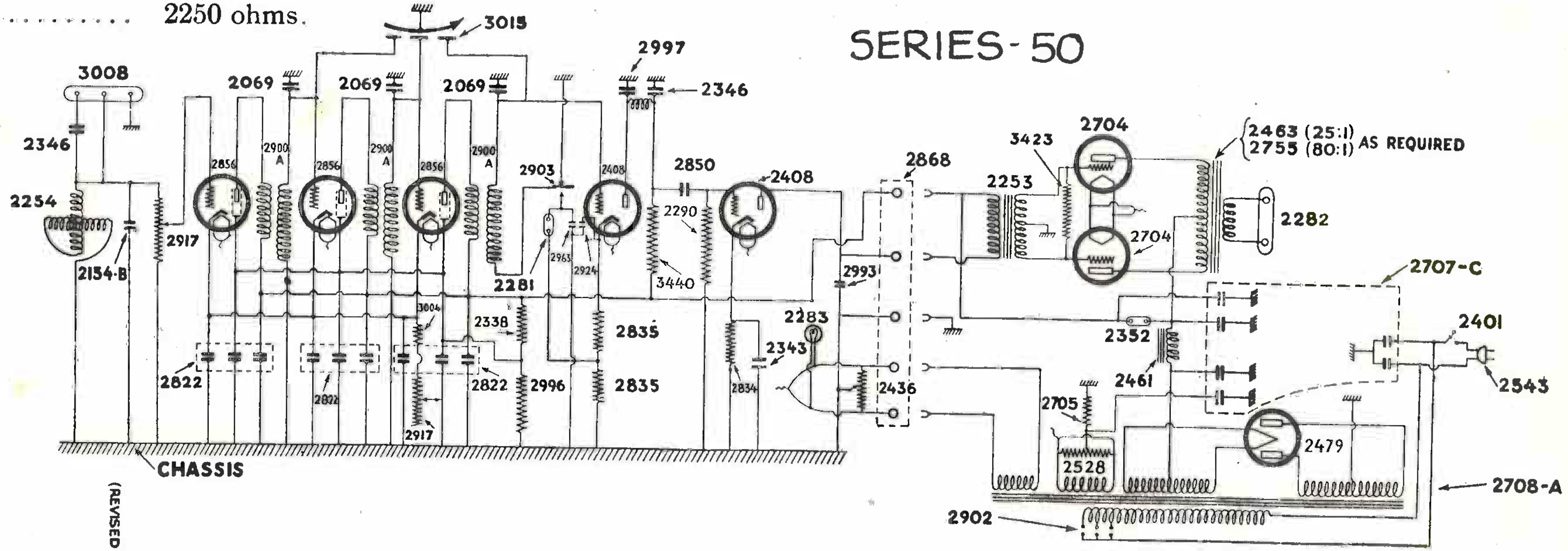

(REVISED 12-2-29)

Radio Service Data Sheet

EVEREADY SERIES 30, SERIES 30-C AND SERIES 40 RECEIVERS

Changes in the audio chassis and reproducer are the only things that distinguish the "Series 40" circuit from the "Series 30;" the former uses type '45 tubes in push-pull, the latter type '71A. To supply the power for the '45s, (S4 wound to deliver 2.5 volts and S1, 250 volts) the No. 2708 unit must replace No. 2460 (PT); a higher-voltage-rating condenser bank, No. 2707, replaces No. 2295 (C19); correct "C" bias is obtained across a 900-ohm resistor No. 2705, instead of No. 2339 (R8); tube sockets No. 2704 (designating '45 tubes) replace sockets No. 2252 for V6 and V7; the output transformer No. 2463 (T3) used in "Series 30-C" and "Series 40" receivers for Eveready dynamic reproducers has a ratio of 25-to-1; while this dynamic unit has a field resistance of 5,000 ohms. "Model 30" (table model) has a No. 2293 A.F. transformer unit, T3, with a ratio of 1-to-1. Jensen D-5 or Newcombe-Hawley NH-7 reproducers may be used with the No. 2463 transformer in the "30-C"; the field current available from the receiver is 4 watts at approximately 110 volts D.C.

An unusual feature of the design of these receivers is the use of a variometer, L1, which is ganged to the variable condensers C2, C3, C4.

The tubes used in the "30," "30-C," and "40," are as follows: V1, V2, V3, V4, V5, type '27; V6, V7, type '71A or type '45, as explained above; V8, type '80; V9 is a 2.5-volt pilot light.

Additional data on the remaining units is given below: Condenser C1, in shunt with L1, is operated from the panel and serves as an antenna trimming unit; C2, C3, C4 have a common shaft and, if the rotor plates loosen, it is necessary to remove the R.F. shield, drive cable, and variometer, and then replace the three-gang condenser with another No. 2192 assembly; C5, C6, C7, in shunt with C2, C3, C4, are aligning units, each mounted on one end of the respective tuning unit; C8 has a capacity of .00025-mf.; C9, .0001-mf. C10, C11, C12 are neutralizing condensers, mounted on a hard rubber strip in the R.F. sub-panel and reached through three holes in the rear of the chassis; C13, C14 are 0.5-mf.; C15 is 2 mf.; C16, 1 mf., C17, C18, 1 mf., C19, 2 mf., and C20, 4 mf., constitute filter bank No. 2295, and the capacities are tapped in this order; C20 being nearest to the mounting base of the bank; The can is the common, grounded side. C21 has a capacity of .0002-mf.

Grid leak R1 (red stripe) has a resistance of 2 meg.; hum-balancing potentiometer R2 is 10 ohms; R3, 1,750 ohms; R4 (green stripe) 17,500 ohms; R5, 3,500 ohms; R6, volume-control potentiometer, 600 ohms; R7, 175 ohms; R8, 1,000 ohms; R9 is the usual center-tapped resistor (which may be 15 or 20 ohms). R10, of 2,500 ohms, takes the place of the reproducer's field coil in models in which the dynamic speaker is not used.)

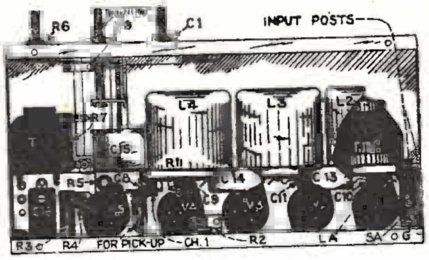

Under view of the receiver chassis of the Eveready "30," "30C," and "40" receivers; the variometer, mounted on the top of the chassis, is on the same shaft with the tuning condensers.

Voltage compensation in PT is obtained by putting the "plug" into the hole marked with the line-voltage figure which is nearest to the measured value of the power supply.

To facilitate shop service, Service Part No. 2715, an extension cable with terminals to fit over the connector strips on the R.F. and A.F. chasses,. is available for the purpose of making external substitution of an R.F. or A.F. chassis; which enables checking by the substitution method, without removing either cabinet chassis.

Volume control R6 varies the positive potential of the cathodes of V1, V2, V3, in relation to ground; inversely, this varies the negative bias on the grids of these tubes, the grid returns of which are grounded. Defects in this part of the circuit may occur as a short of the movable arm of R6 to ground (chassis); broken wire in winding of R6; short leads to R6.

If, for any reason, the braided-copper drive cable around the tuning drum becomes too loose to grip the drum dial properly, a new cable (unit No. 2257) or spring should be installed.

It is recommended that, to neutralize the set, a dummy tube be used in conjunction with an oscillator and an indicating meter; and adjustment be made for zero indication, starting with C12 (V3).

To align the circuits, the same oscillator and meter are recommended; adjustment being made of C5, C6, C7 (in this order). Align for maximum meter reading of A.F. output. To adjust the variometer, tune the receiver and oscillator to resonance at about 40 on the dial; loosen the two screws holding the variometer bracket to the gang condenser cradle, and rock variometer for maximum signal; tighten the two screws. Repeat this procedure at 75 and 25 on the dial. If the tuning circuits do not tune as sharply as normal, or signal strength is not at par, make certain before aligning that the condenser plates are not out of position.

For aligning and neutralizing, an insulated wrench is required.

The R.F. inductances are matched in one group. The voltage drop across the portion in the secondaries is the neutralizing potential.

Hum often may be eliminated by changing detector tubes, readjusting R2 for each tube.

The voltages normally found in these Eveready receivers are as given below:

Tube	*"A"*	*"B"*	*"A"*	*"B"*	*"C"*	*"K"*	*Ma.1*	*Ma.2*
V1	2.5	109	2.45	100	6.0	6.0	2.5	6.0
V2	2.5	109	2.45	100	6.0	6.0	2.5	6.0
V3	2.5	109	2.45	100	6.0	6.0	2.5	6.0
V4	2.5	109	2.45	50	0.0	0.0	3.0	3.2
V5	2.5	109	2.45	100	4.5	4.5	3.0	4.3
V6	5.2	192	5.10	175	37.5	—	20.0	24.0
V7	5.2	192	5.10	175	38.0	—	20.0	24.0
V8	—	—	5.10	—		—	44.0	—

These tests were made with a line voltage of 119, "plug" in the 115-volt tap, and the volume control turned full on. The second and third columns, "A" and "B," are readings with the tube not yet placed in tester; Ma.1 indicates normal plate current and Ma2, plate current upon grid test.

The circuit shown in the diagram is an "R.F.L." (Radio Frequency Laboratories) hook-up; all Eveready receivers in the "30" series are identical as respects the chassis.

The response characteristic of a circuit tuned by a variometer is exactly the reverse of one tuned by a condenser; that is, the circuit becomes more sensitive as it is tuned to the higher wavelengths. The two methods are combined in the design of this receiver to obtain even amplification throughout the tuning range.

Volume control R6 is a wire-wound unit.

Directly below the field terminal jacks on the Table Model is a snap switch (SW3) which is thrown one way for dynamic, and the other for magnetic, speaker operation. The field coil of the reproducer plugs into pin jacks located on the rear face of the power plant; and the voice coil into two pin jacks mounted between the power tubes.

The insulated terminal board, for adjustment to compensate line-voltage conditions, is mounted on top of the power plant between the power tubes and the rectifier; the removable plug is to be inserted in one of the three holes in the top of this board.

The "Model 30" chassis is designed for easy servicing by separate removal of either the set chassis or the power chassis. When the two units are reconnected, care should be taken to see that the busses are tightly bolted.

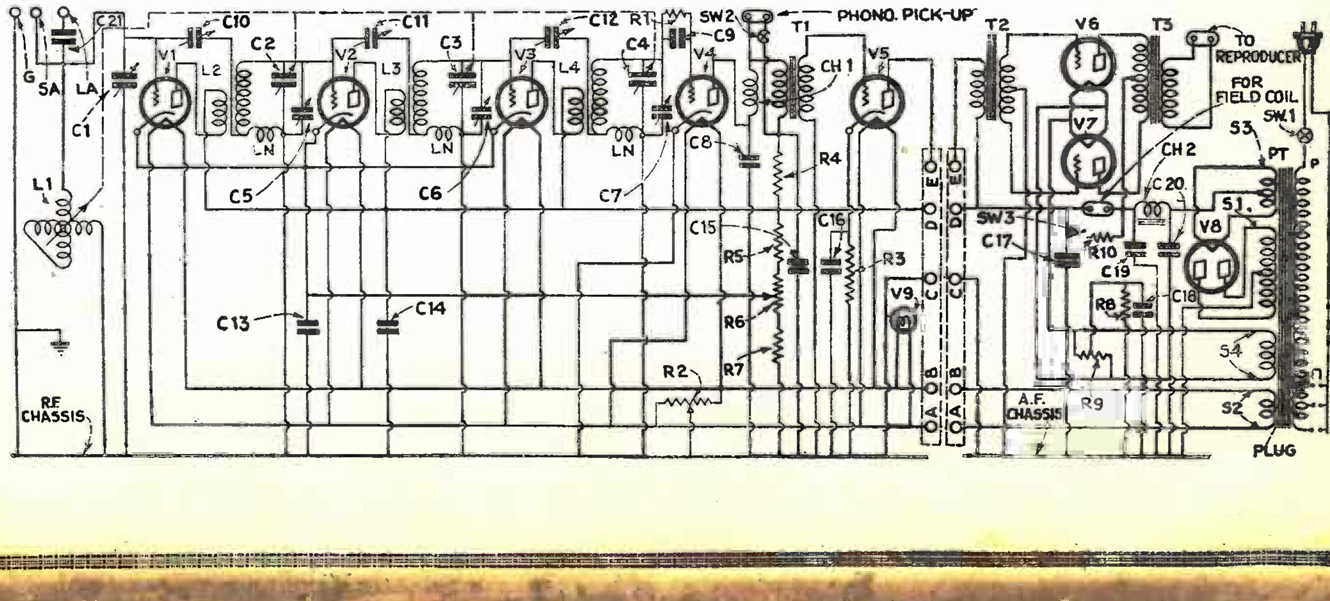

PHILADELPHIA STORAGE BATT.,CO.

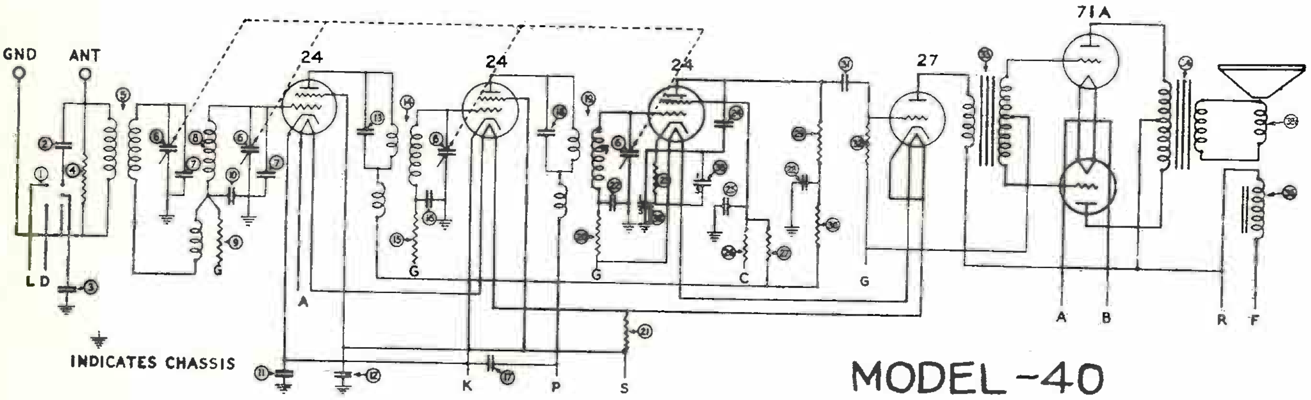

MODEL -40

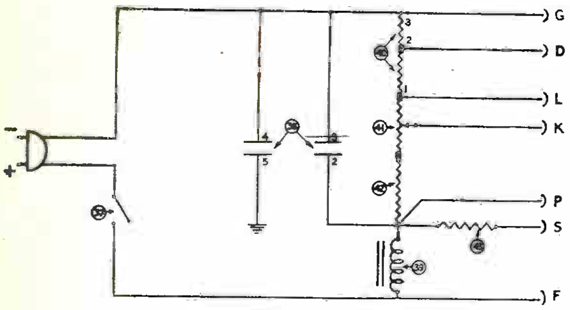

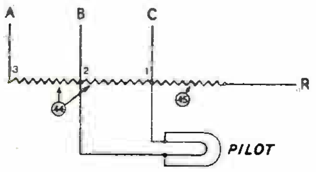

NOTE. Switch 1 Right-Hand Terminals are shorted in local position. Left-Hand Terminals are shorted in distance position.

Resistor ㊺ is mounted at bottom of cabinet.

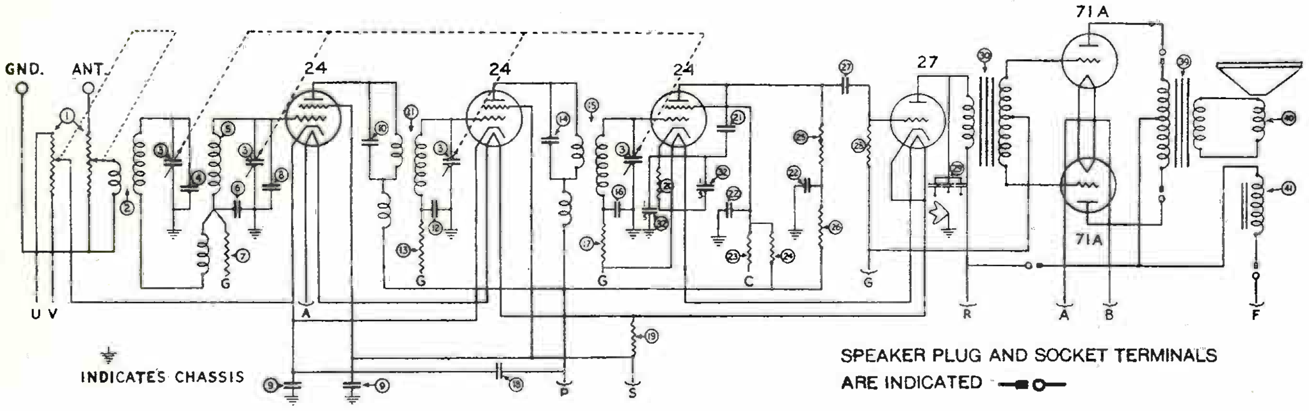

SPEAKER PLUG AND SOCKET TERMINALS ARE INDICATED —■○—

MODEL-41

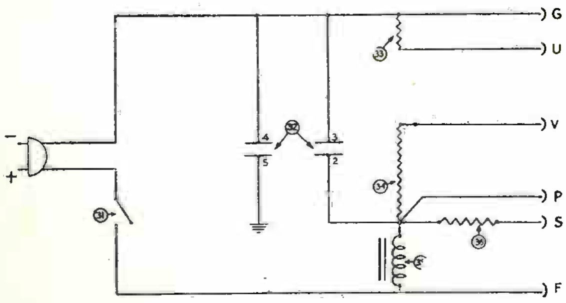

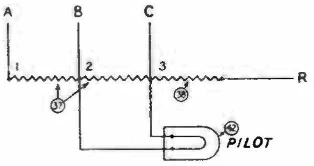

RESISTOR ㊳ IS MOUNTED AT BOTTOM OF CABINET

PHILADELPHIA STORAGE BATT.,CO.

Philco Model 65

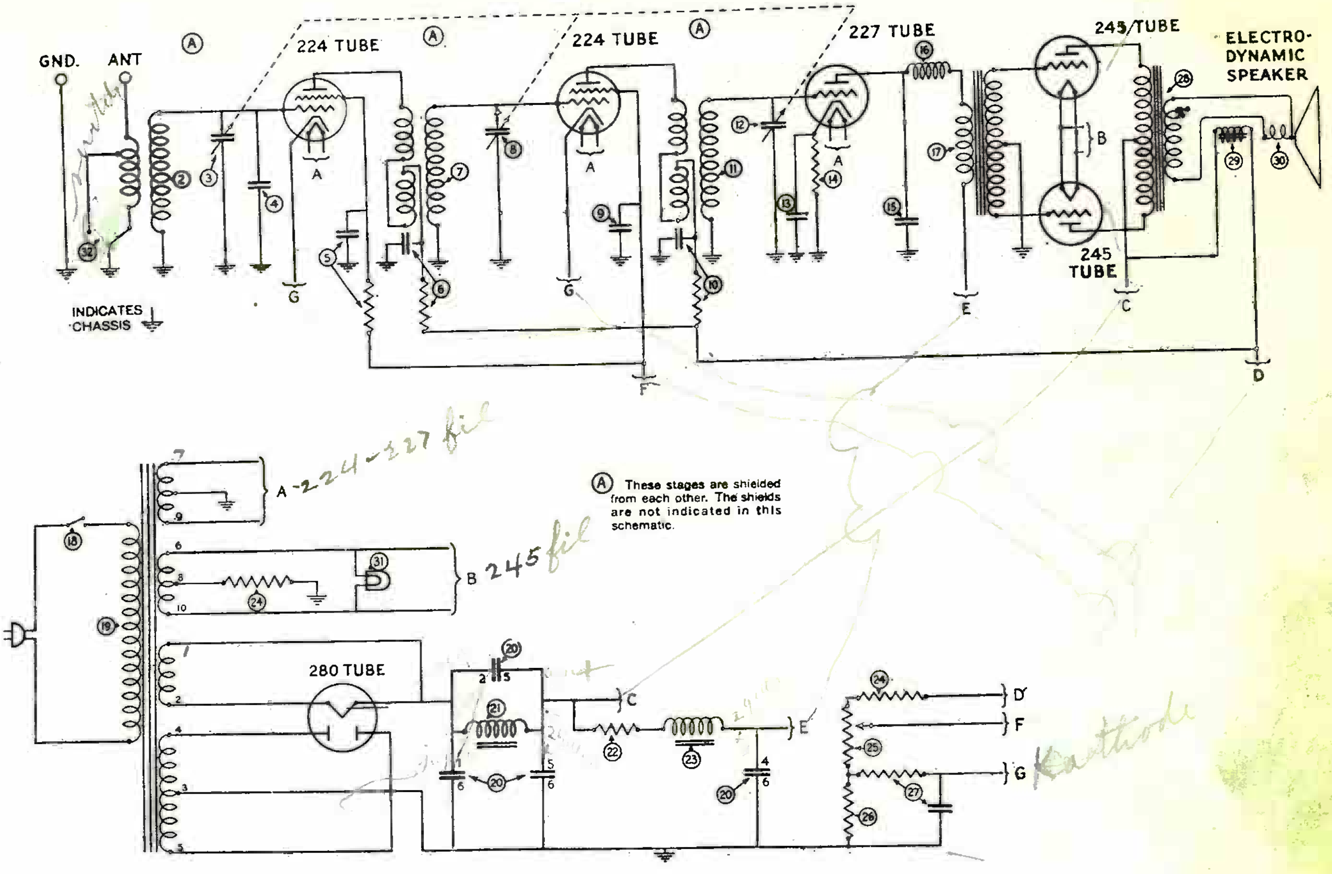

Ⓐ These stages are shielded from each other. The shields are not indicated in this schematic.

Philco Model 76

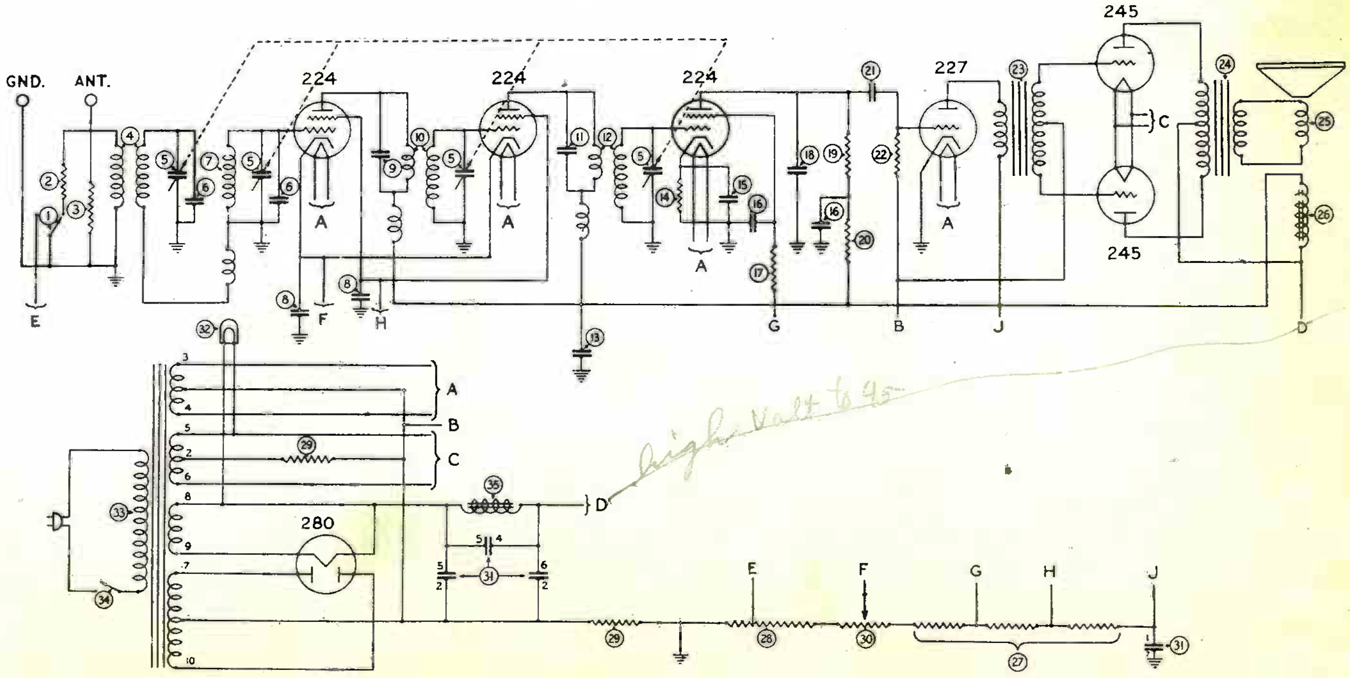

PHILADELPHIA STORAGE BATT.,CO.

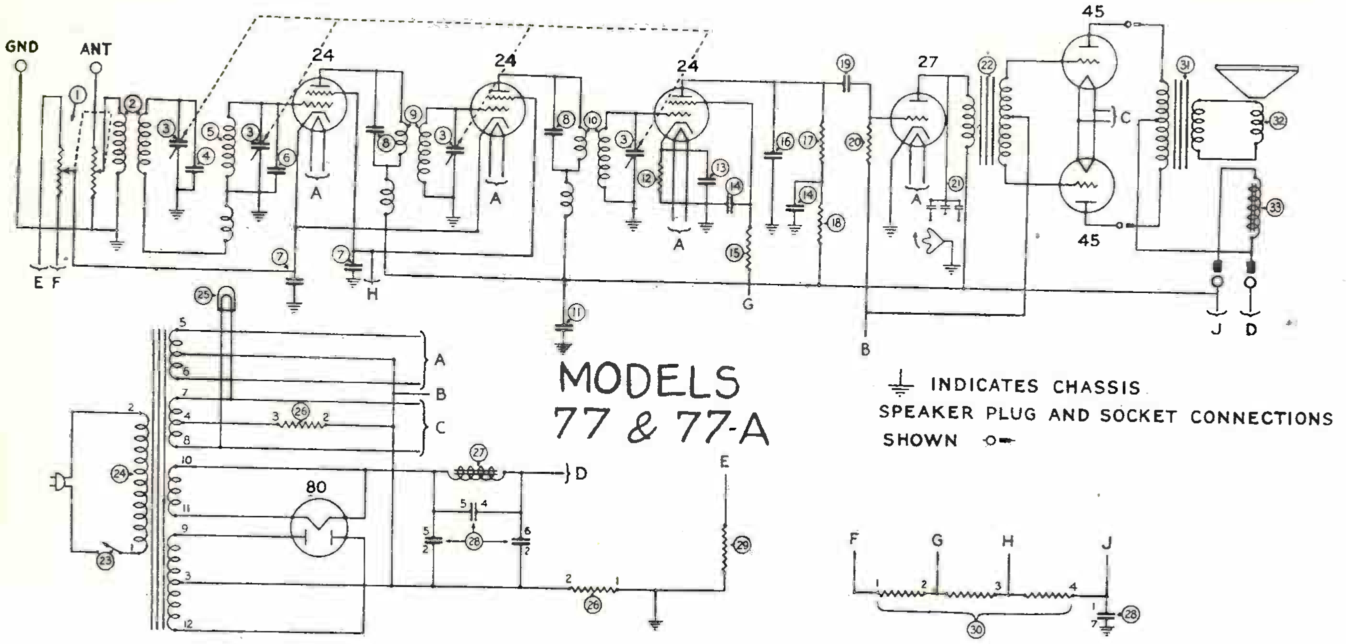

MODELS
77 & 77-A

⏚ INDICATES CHASSIS
SPEAKER PLUG AND SOCKET CONNECTIONS
SHOWN -o-

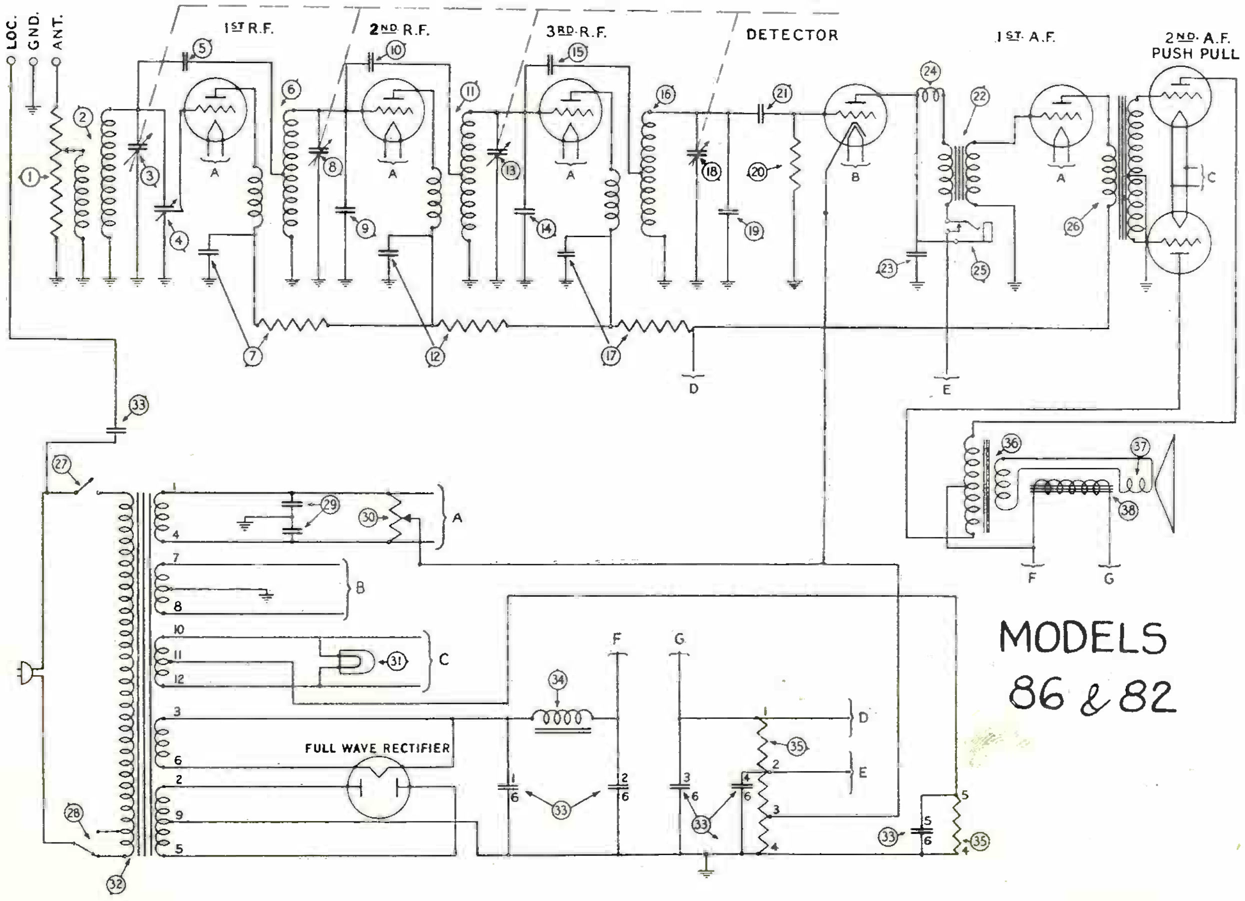

MODELS
86 & 82

Radio Service Data Sheet

PHILCO 87

This receiver is of the neutralized, tuned-radio-frequency type. For local reception, in certain localities, good results will be obtained when the light-line is used as the antenna. To do this, connect a jumper from "Loc." to "Ant."; coupling to the line is then obtained through the series condenser C21 in the filter block. The receiver is shipped with this connection already made.

High selectivity in this receiver has been achieved by the use of four tuned stages, ganged, with compensating condensers for balancing the tuning of each stage, in addition to the panel-mounted compensating condenser, VC, which carries a spring contact. This last control resonates the antenna stage of R.F.; when this condenser is rotated counter-clockwise the grid of the first tube V1 is disconnected from the input circuit and grounded. This is the short-range position, used for strong signals. For weak signals the knob should be rotated clockwise, to reconnect the grid of V1 to the input circuit. Further adjustment to the right allows finer tuning of the antenna circuit.

When using the light socket as an antenna it is advisable to reverse the light-socket plug to determine the best connection for maximum signal strength and minimum hum.

The tubes used in this receiver are: four '26s, V1, V2, V3, V5; one '27, V4; two '45s, V6, V7; one '80, V8.

A good ground connection should always be used with the "Model 87" receiver, which uses the Hazeltine neutralizing system.

The tuning scale used on this set is numbered from 55 to 150. The numbers represent the 96 authorized broadcast channels, and by adding a cipher after each, give the kilocycles. For example, 85 on the scale represents channel number 85 and a frequency of 850 kilocycles.

Lack of sufficient voltage on the R.F. tubes may be due to a grounded hum adjuster R6.

The "Loc." connection is convenient for testing the general efficiency of the outside antenna. If signals are not heard with the outside antenna connected, but good reception is obtained when the "Loc." terminal is connected to "Ant.", the outside antenna system should be checked.

The efficiency of the ground connection may be checked by removing the ground connection while weak signals are being received. There should be a reduction of the volume if the ground connection is good; no reduction denoting a poor ground. (This reduction in volume will not be noticed if the test is made on strong signals.)

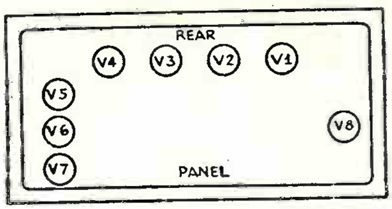

Tube layout of the Philco "Model 87."

If the neutralizing condensers (C1, C2, C3) should short-circuit the plate voltage of the R.F. tubes will be increased, in addition to the circuit's "going dead" so far as signal strength is concerned. A grounded neutralizing condenser will result in very weak signals.

If the circuit tunes broadly, after care has been taken to balance the tuning of each stage, one of the R.F. transformers may be at fault. These are readily replaceable and interchangeable; the constants all being standardized.

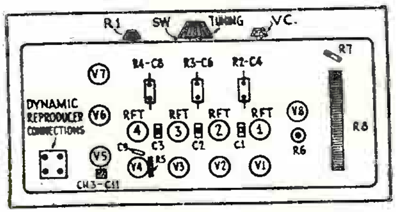

Under-chassis arrangement of the "87." In the open or local position of Vc, the neutralizing condenser C1 becomes a coupler to V2, which is then the first R.F. tube.

A caution is issued by the manufacturer with regard to the tuning-condenser gang. If it has been positively determined that the trouble lies in the alignment of the condenser plates, remove the entire condenser and return it for adjustment. The screws holding the stator plates of the tuning condenser in place, and those holding the rotor bearings, should never be loosened. The compensating condensers C5, C7 and C10 may be adjusted with a wrench to equalize the tuned circuits. Replacement R.F. transformers of standard values are separately obtainable.

If trouble has been localized to the dynamic reproducer, a check with a voltmeter across the field coil should show approximately 135 volts drop.

With a line-voltage of 125, the "Model 87" draws 95 watts from the power line, and the correct set voltages are as follows:

Three R.F., and the first A.F. stages, filaments 1.5 (winding A); plate 90; grid bias 6. R2, R3, R4 are low in resistance and do not reduce plate voltage perceptibly.

Detector heater 2.5 (winding B); plate 30; grid bias 0.

Second A.F. (and pilot lamp) filaments 2.5 (winding C); plate 245; grid bias 45.

Rectifier filament, 5 volts; across secondary 700.

The code used in wiring the receiver is:

Leads from	*Colors*
A.C. Supply	Green rubber covered
A.C. Supply	Black rubber covered
A.C. Supply to C21	Blue, white tracer
"Loc" post to C21	Black
Winding A ('26 filaments)	White, black tracer
Winding A ('26 filaments)	Black, white tracer
Winding B ('27 heater)	Yellow, green tracer
Winding B ('27 heater)	Yellow, plain
Winding C ('45 filaments)	Green, yellow tracer
Winding C ('45 filaments)	Green, plain
Winding C center tap	Green, black tracer
Rectifier winding center tap	Yellow, rubber covered
Ch 1 (high-voltage side)	White
Ch 1 (low-voltage side) Push-Pull plate lead and Field Coil, high side	Black, yellow tracer
Ch 2 (high-voltage side) and Field Coil, low side	Blue, plain
Ch 2 (low-voltage side) and amplifier plate leads	Yellow, green tracer
R7 (low-voltage side) and "B+" on A.F. transformer (detector plate)	Yellow.

Values of parts are given as follows: R1, 10,000 ohms; R6, 6 ohms. C4, C6, C8 (units include R2, R3, R4), each 0.1-mf.; C11, 001-mf.; C19, C20, 0.5-mf. The following are included in the filter block; C12, 0.1-mf.; C13, C15, 1-mf.; C14, C16, C18, 2-mf.; C17, C21, 0.15-mf. R7, 70,000 ohms; R8, 4,582 ohms tapped at 157, 640 and 3.785 ohms.

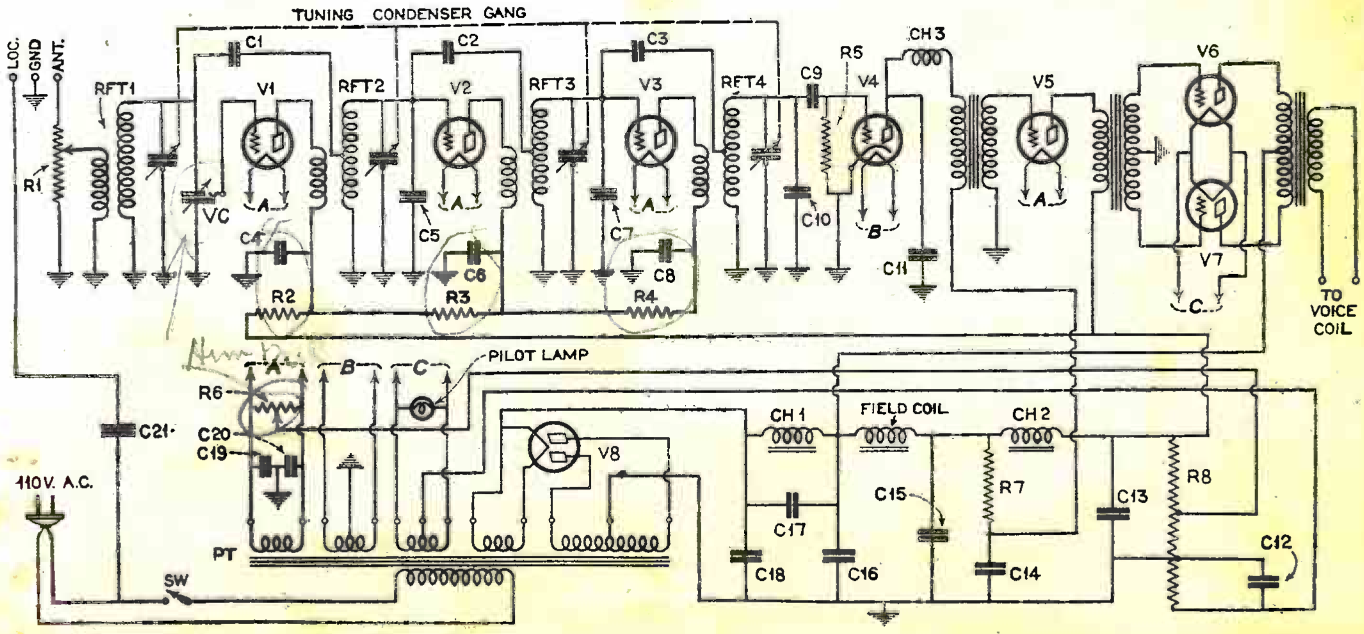

PHILADELPHIA STORAGE BATT., CO.

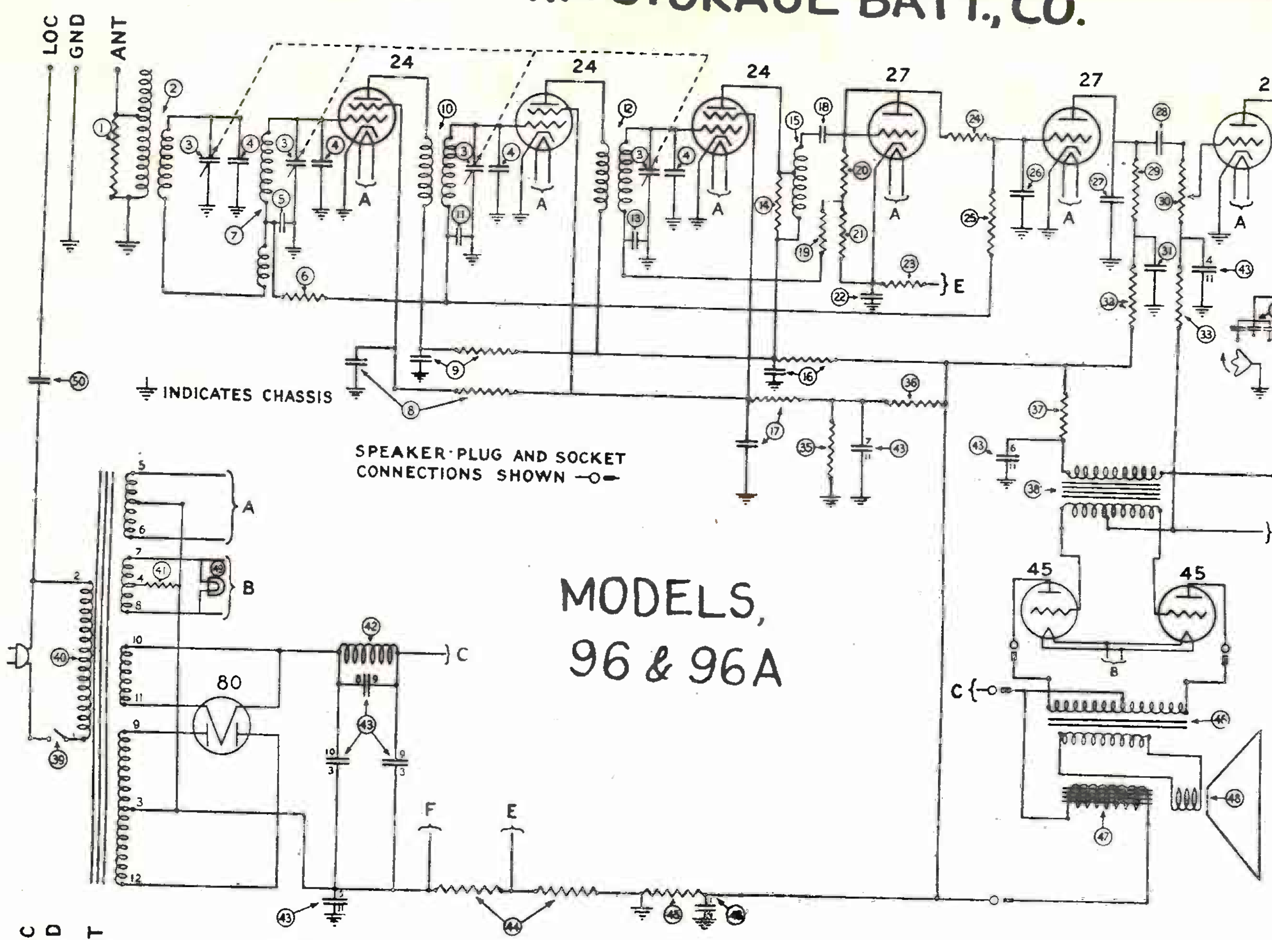

MODELS, 96 & 96A

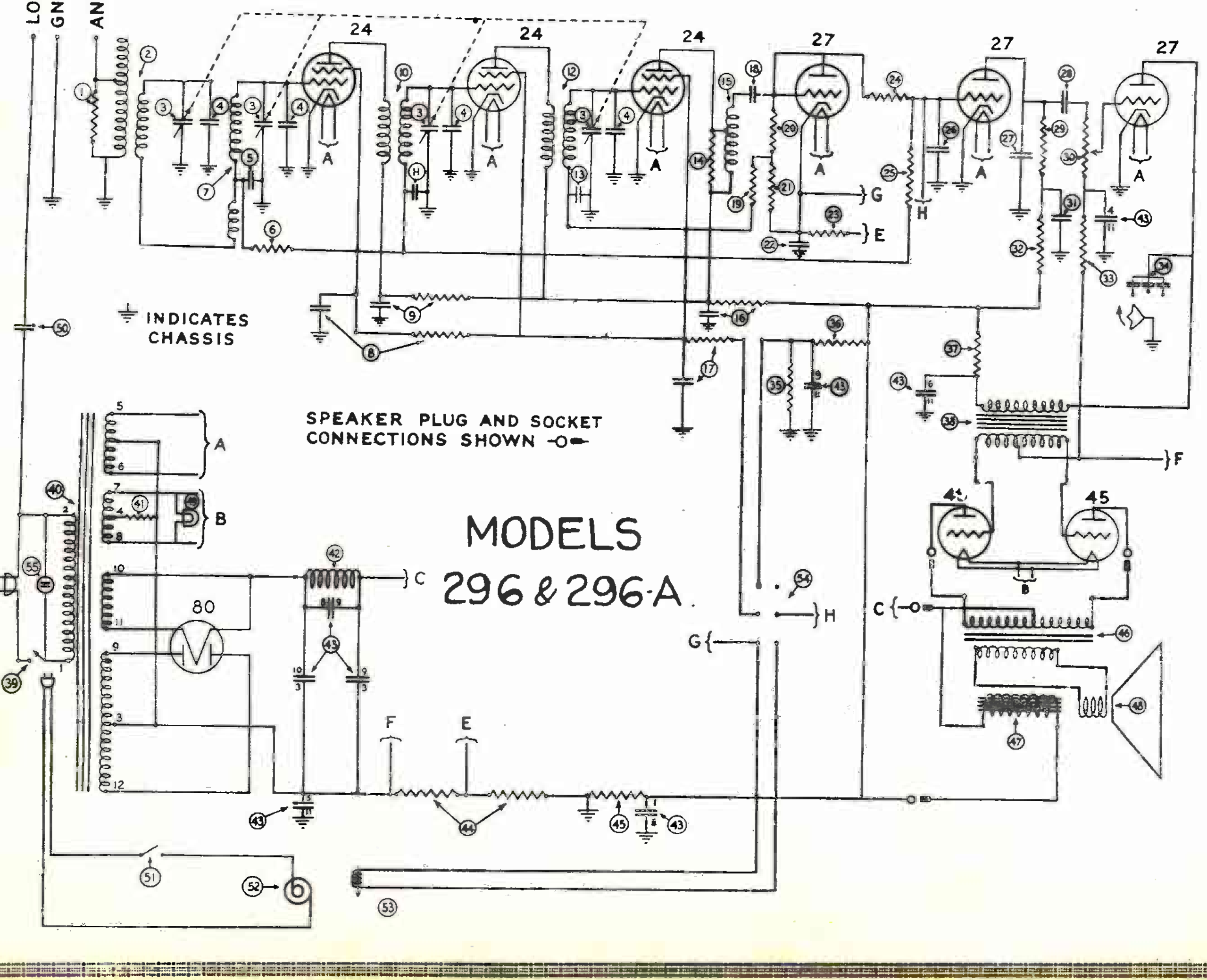

MODELS 296 & 296-A

PHILADELPHIA STORAGE BATT., CO.

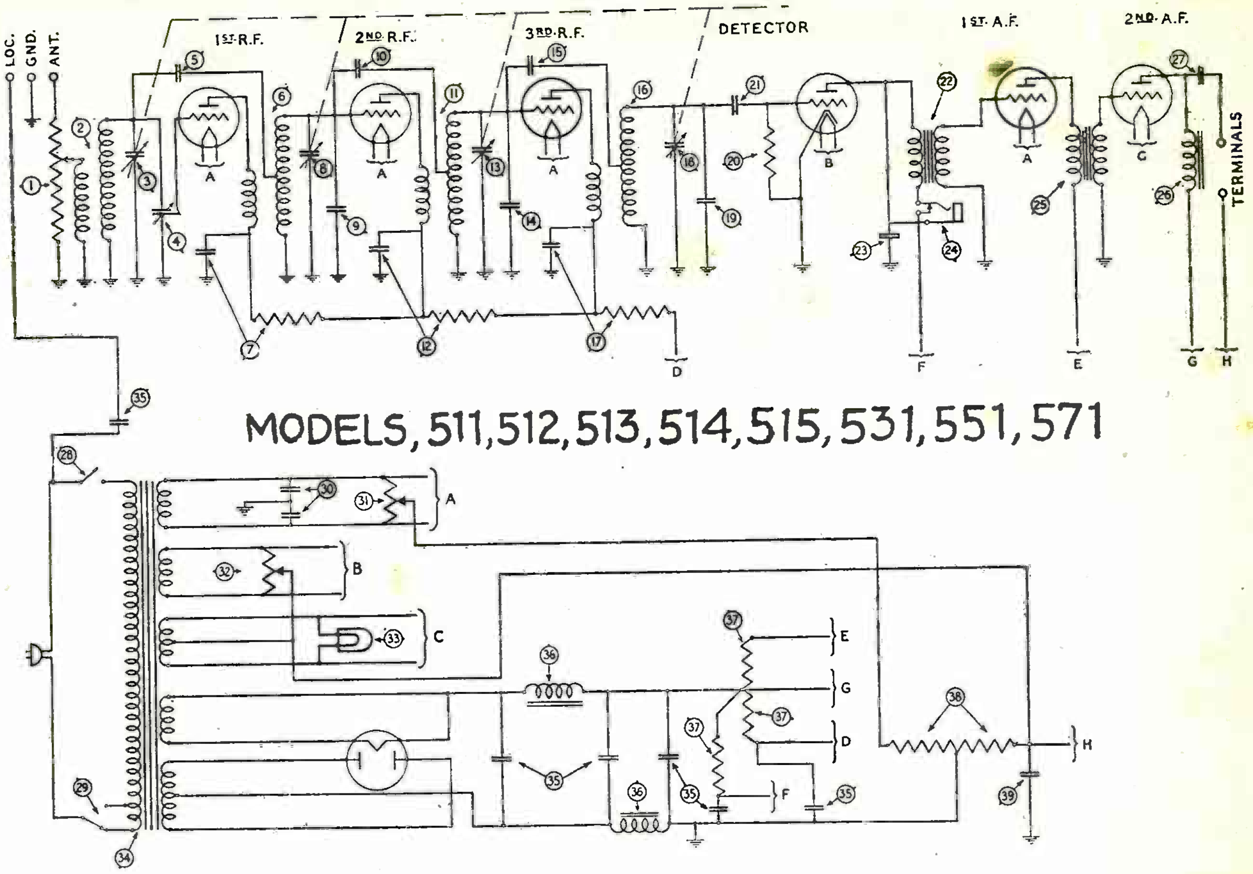

MODELS, 511, 512, 513, 514, 515, 531, 551, 571

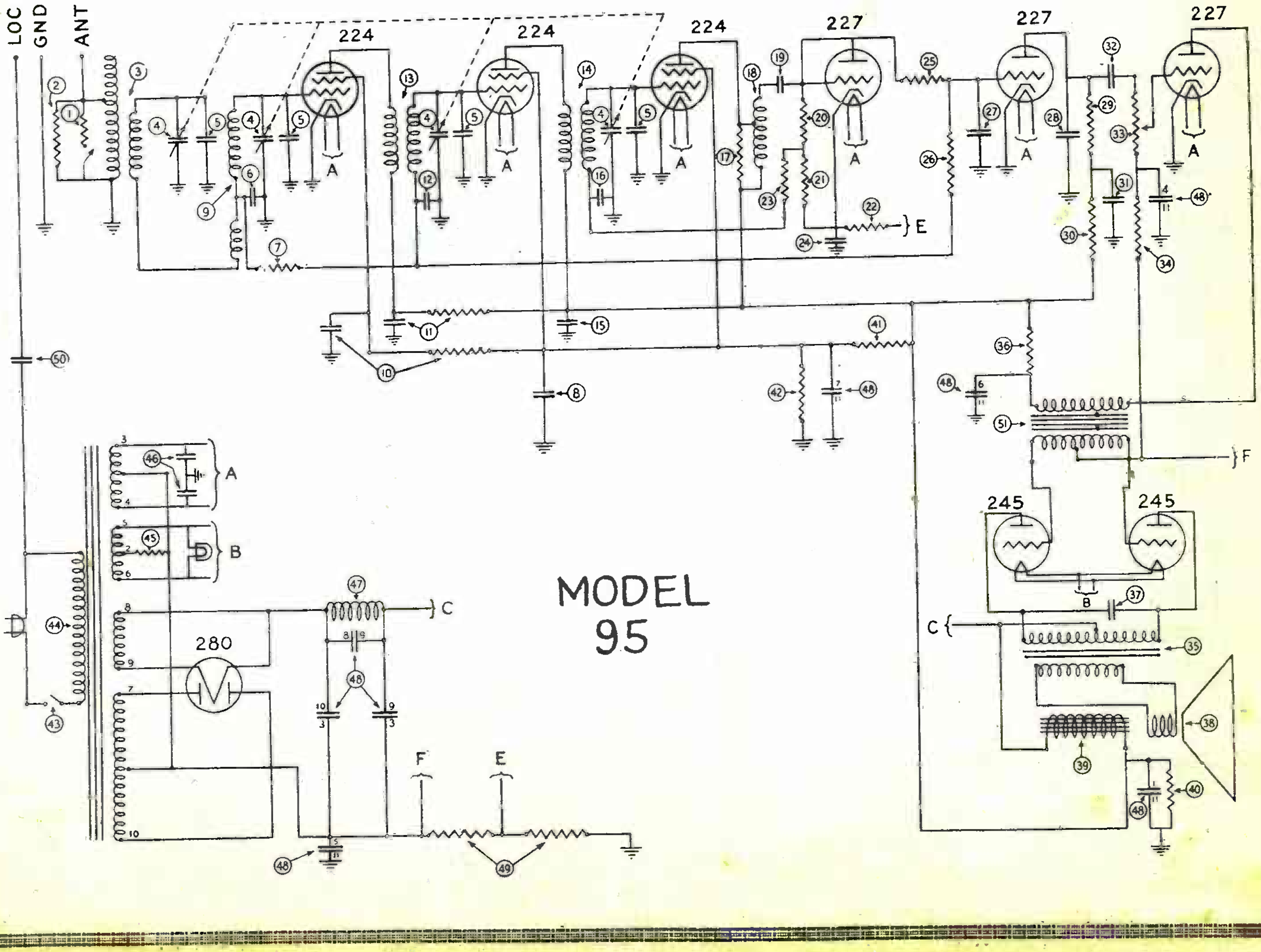

MODEL 95

PILOT RADIO & TUBE CORP.

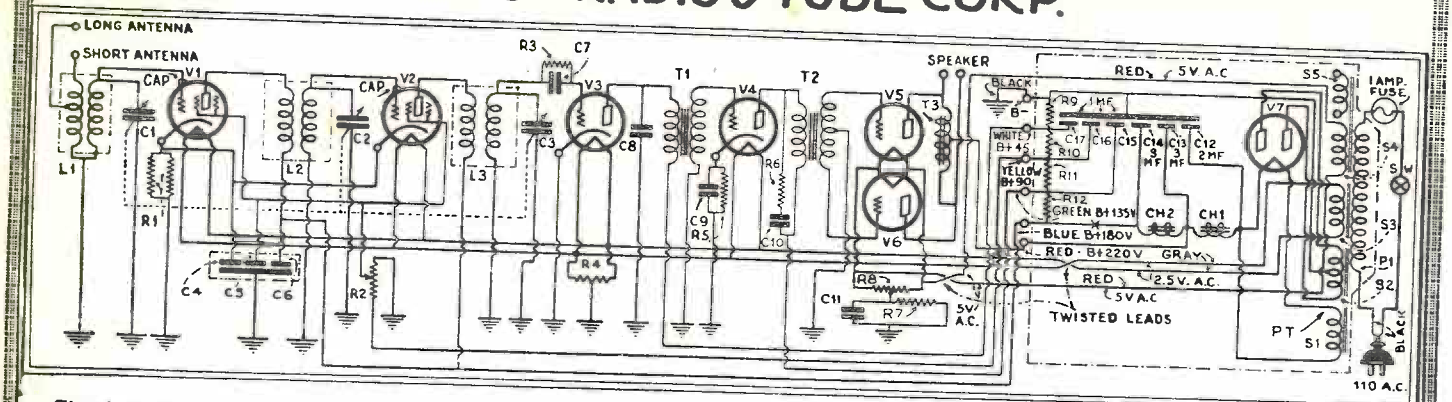

The circuit diagram of the Pilot "P. E. 6" broadcast receiver, at the left; the dotted square at the right encloses the "K-111" power pack, designed for push-pull '71A operation. Circuit values and constants are given in the text and list of parts.

K-113 POWER AMPLIFIER

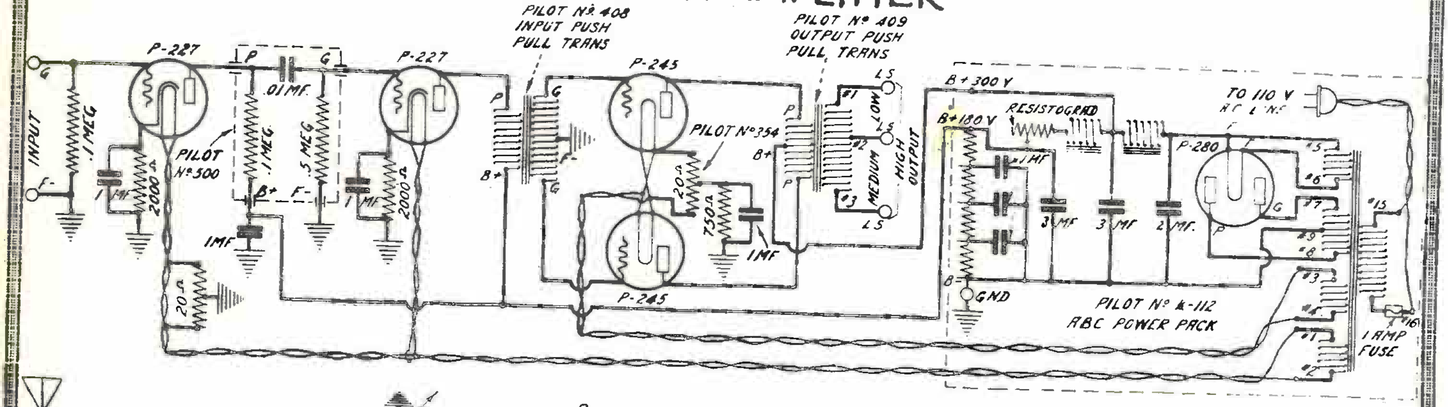

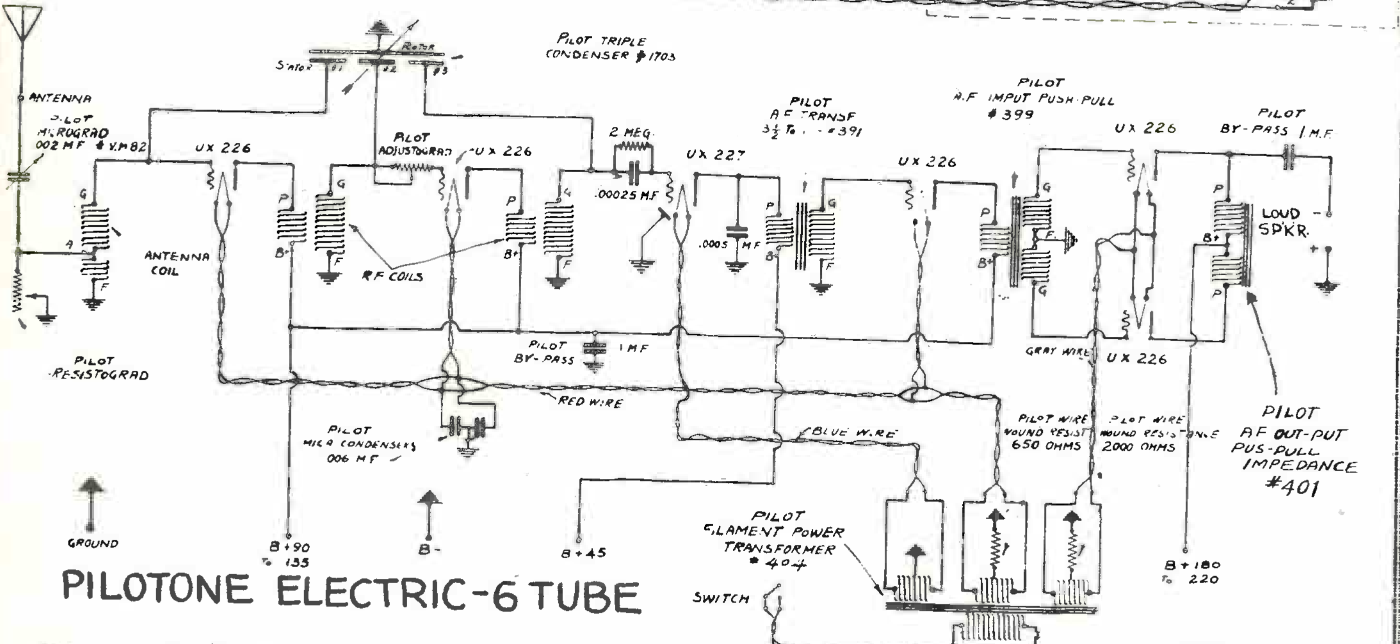

PILOTONE ELECTRIC-6 TUBE

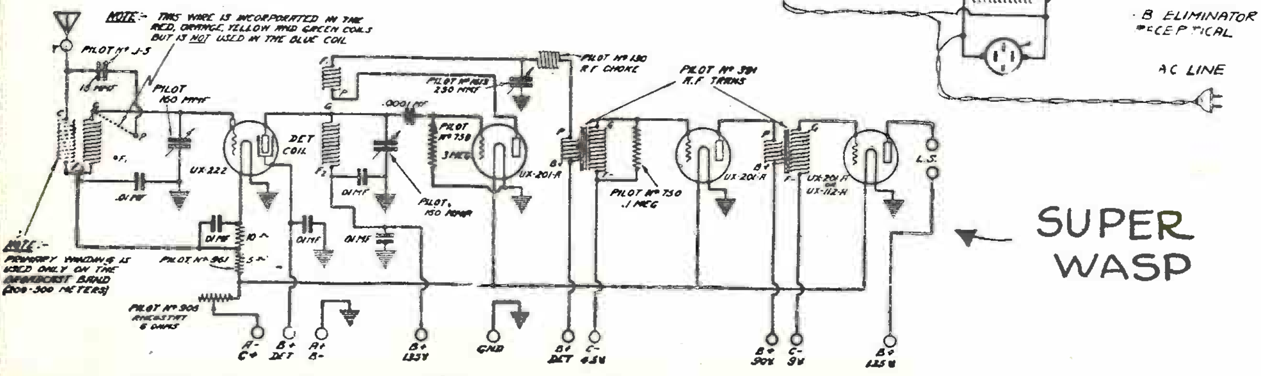

SUPER WASP

The complete schematic diagram of the Super-Wasp. The various ground symbols indicate connections to the metal chassis of the receiver.

PILOT RADIO & TUBE CORP.

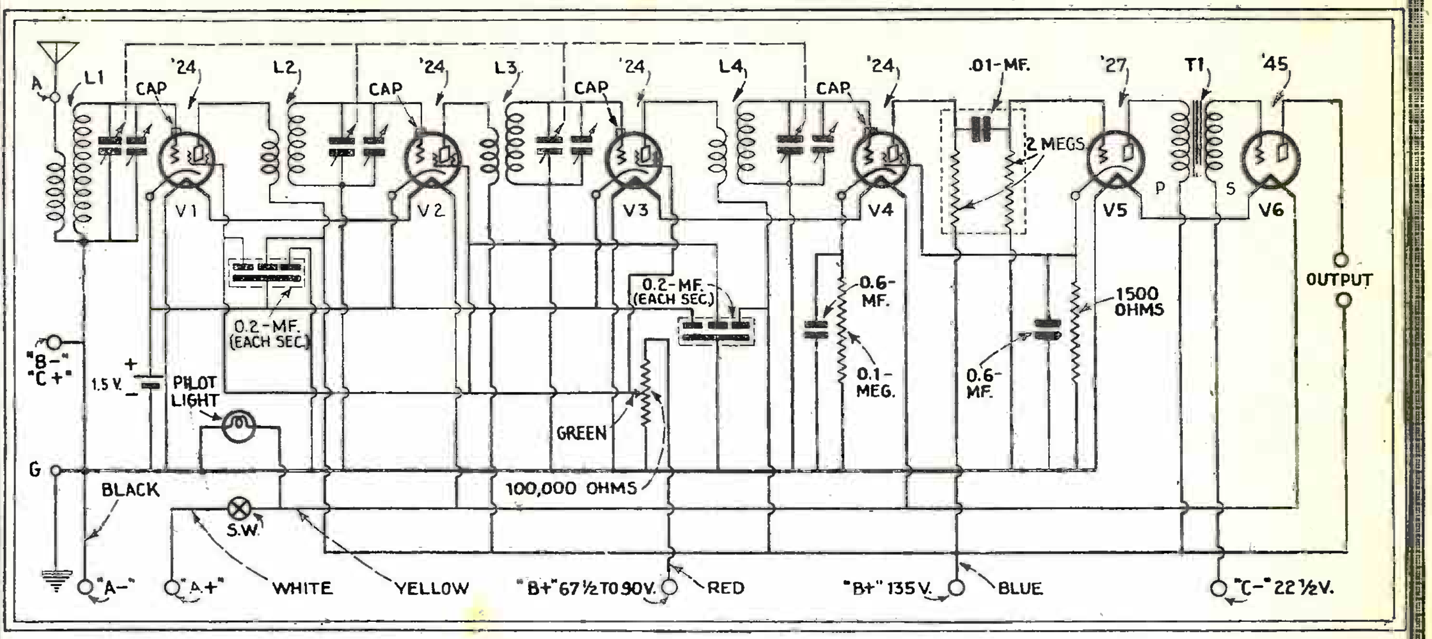

Circuit of the Pilot automotive radio receiver, with three stages of screen-grid R.F. amplification, screen-grid detector, resistance-coupled '27 first audio, and a '45 power tube, in place of the '12 commonly used; its use improves output and simplifies the circuit.

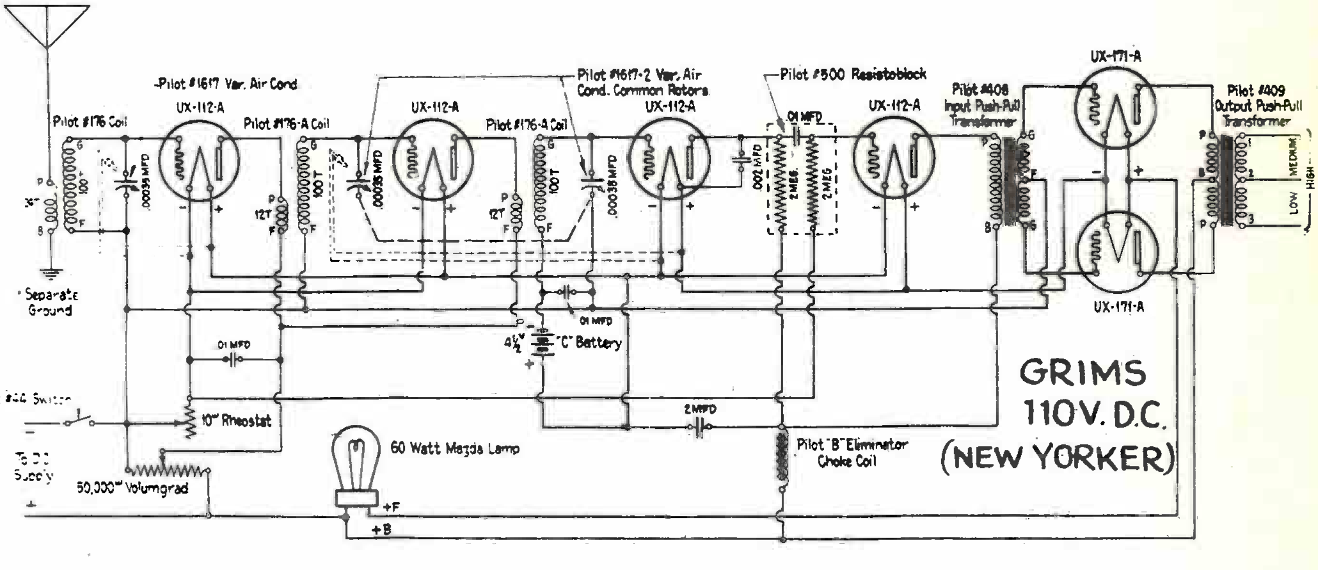

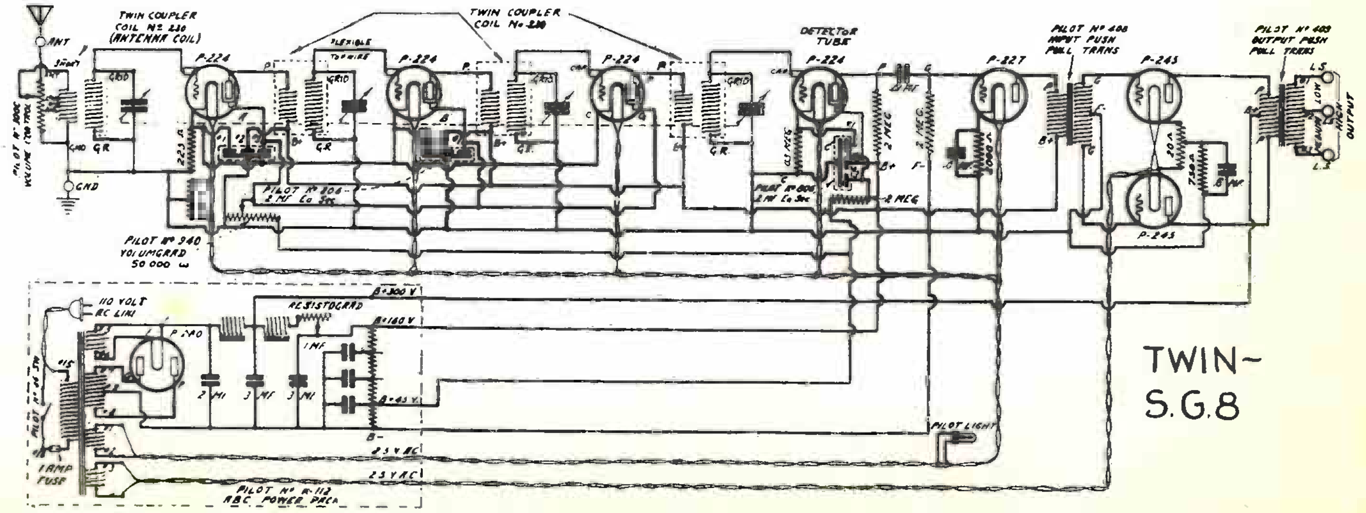

PILOT RADIO & TUBE CORP.

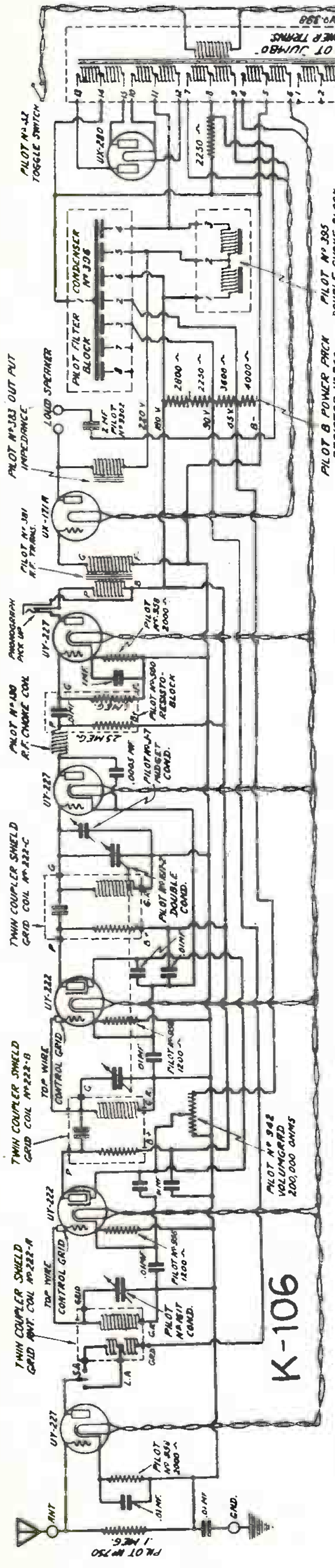

K-106

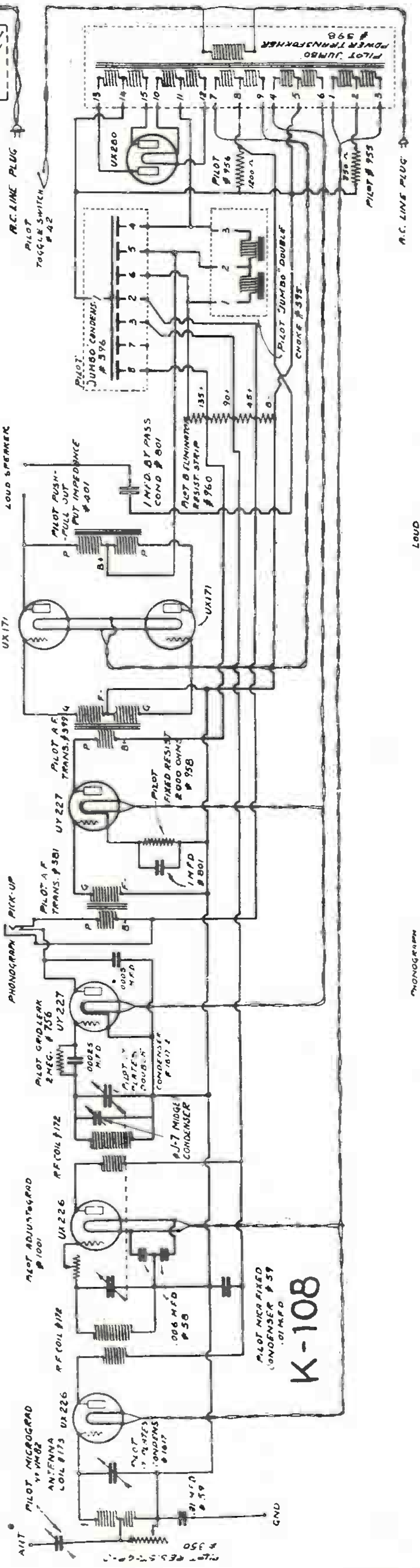

K-108

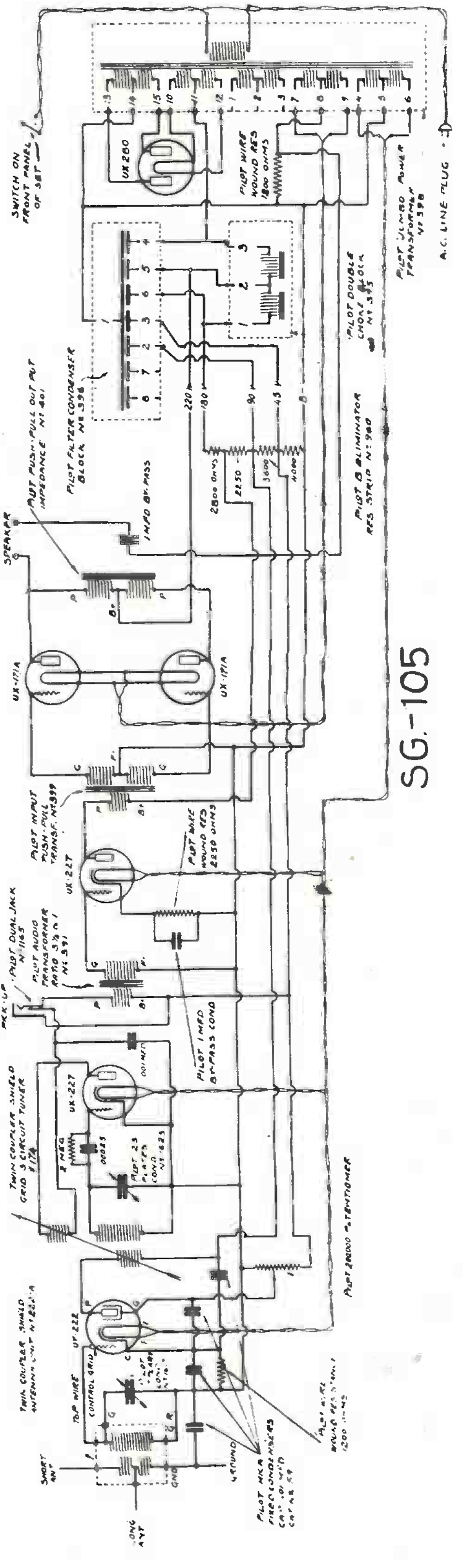

SG-105

R.C.A:VICTOR CO.

(VICTOR DIV.)

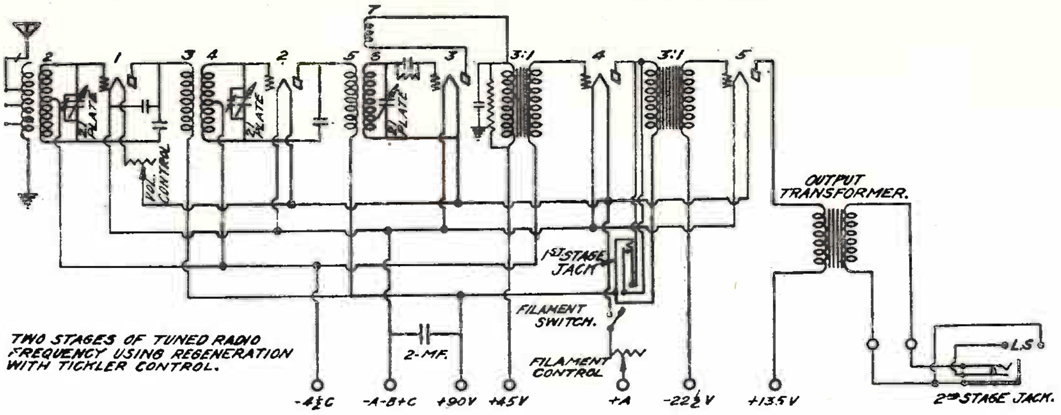

TWO STAGES OF TUNED RADIO FREQUENCY USING REGENERATION WITH TICKLER CONTROL.

Wiring Diagram Alhambra I (7-1)

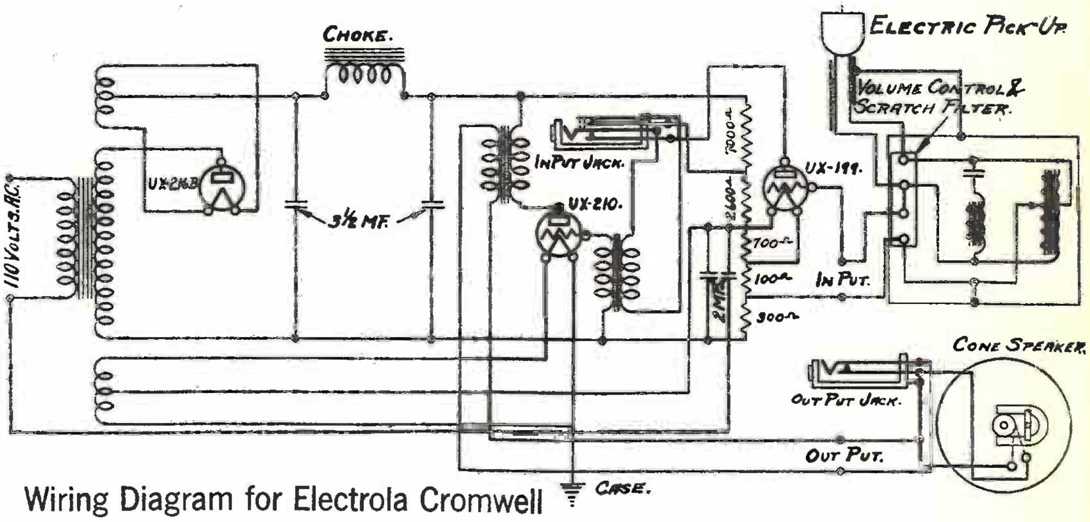

Wiring Diagram for Electrola Cromwell

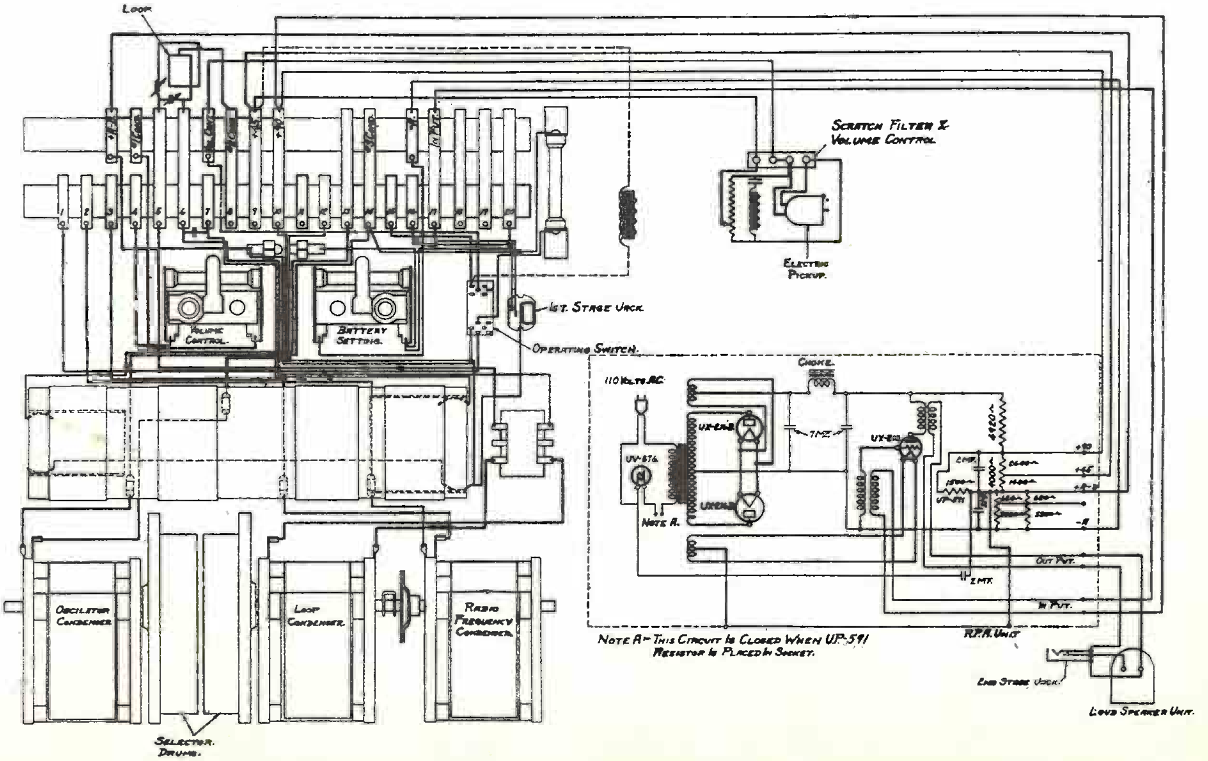

NOTE A— THIS CIRCUIT IS CLOSED WHEN UP-591 RESISTOR IS PLACED IN SOCKET.

Wiring Diagram for Borgia II

R.C.A.-VICTOR CO. (VICTOR DIV.)

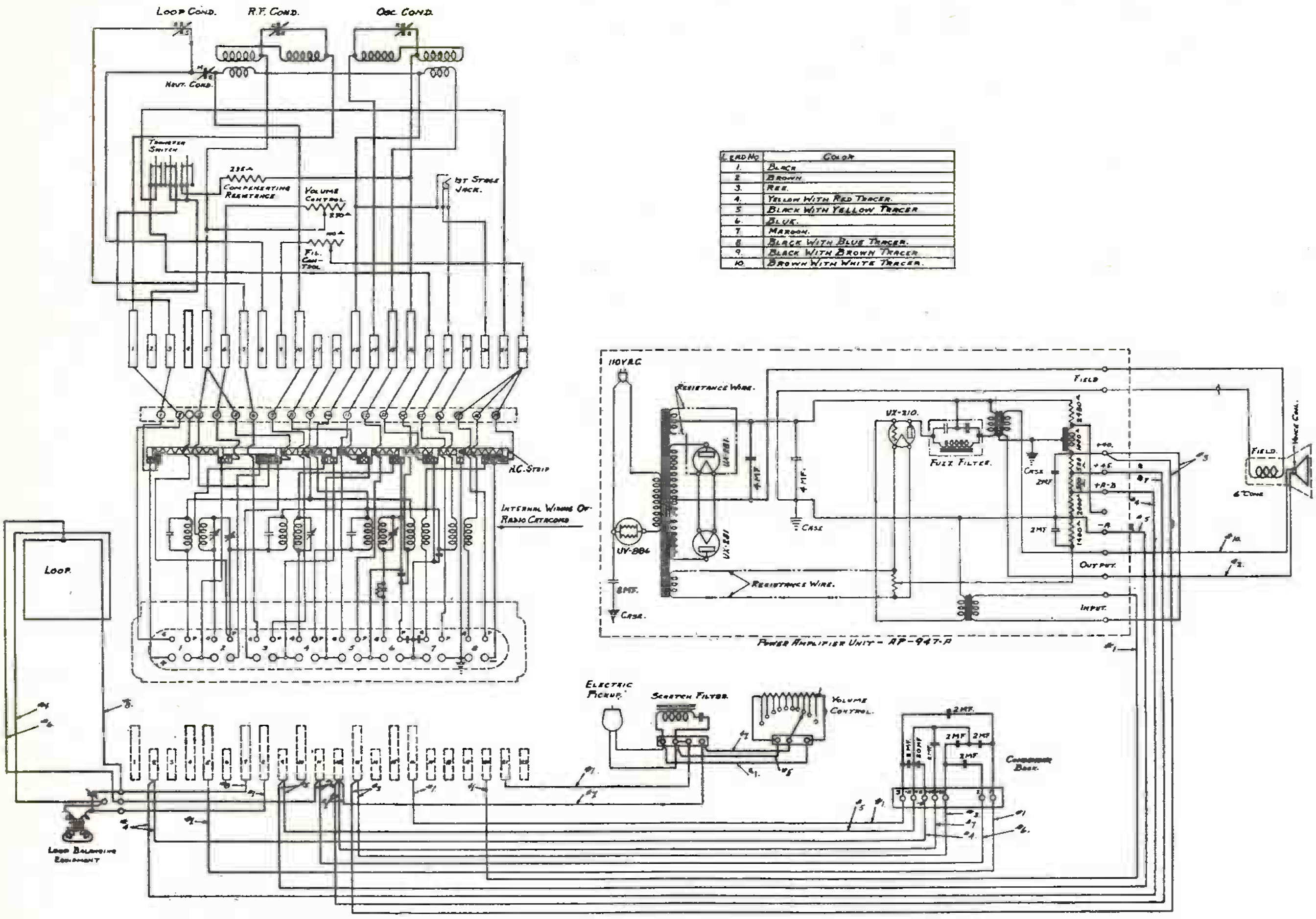

Lead No	Color
1.	Black
2	Brown
3.	Red.
4.	Yellow With Red Tracer.
5	Black With Yellow Tracer
6.	Blue.
7	Maroon.
8	Black With Blue Tracer.
9.	Black With Brown Tracer
10	Brown With White Tracer.

Note — Numbered Terminals In Broken Lines Same As Those In Full Lines.

Wiring Diagram—Electrola 9-25

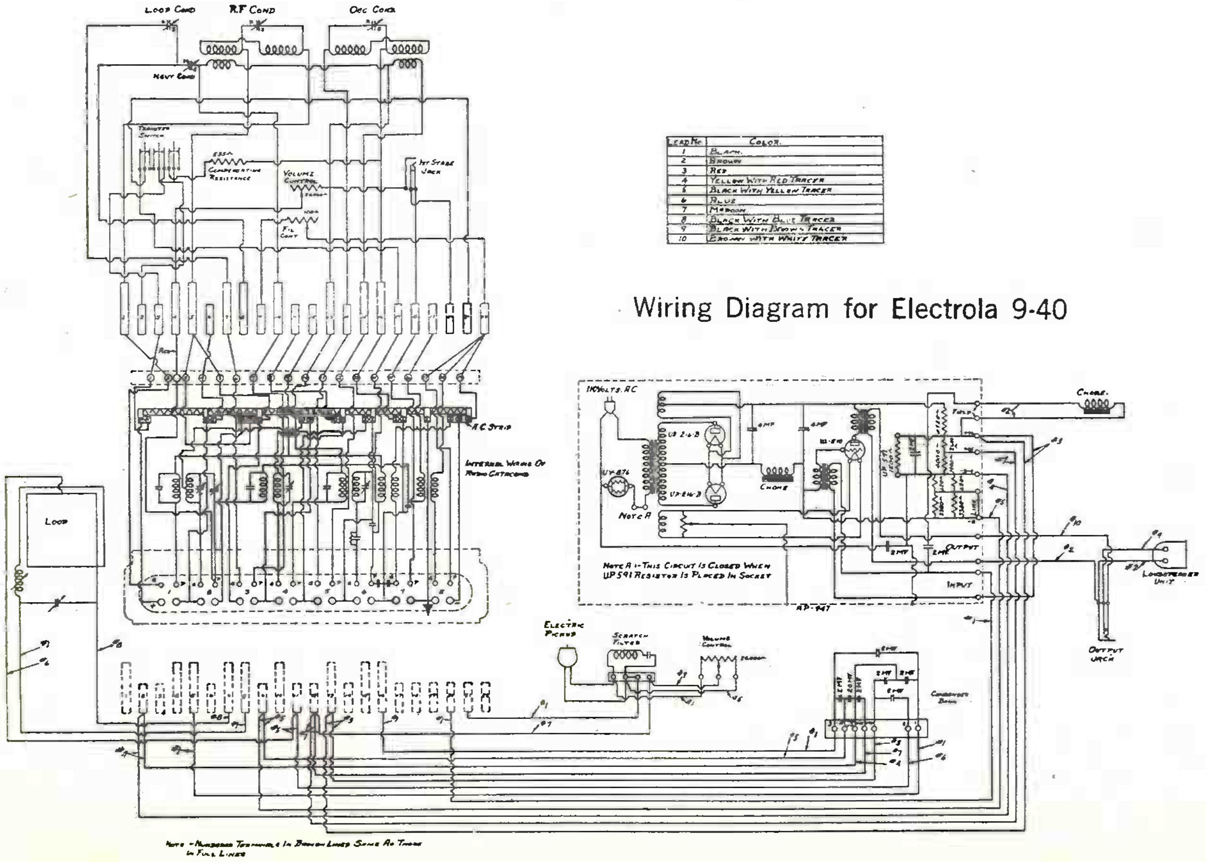

Lead No	Color.
1	Black.
2	Brown
3	Red
4	Yellow With Red Tracer
5	Black With Yellow Tracer
6	Blue
7	Maroon
8	Black With Blue Tracer
9	Black With Brown Tracer
10	Brown With White Tracer

Wiring Diagram for Electrola 9-40

Note A — This Circuit Is Closed When UP 591 Resistor Is Placed In Socket

Note — Numbered Terminals In Broken Lines Same As Those In Full Lines

R.C.A.-VICTOR CO. (VICTOR DIV.)

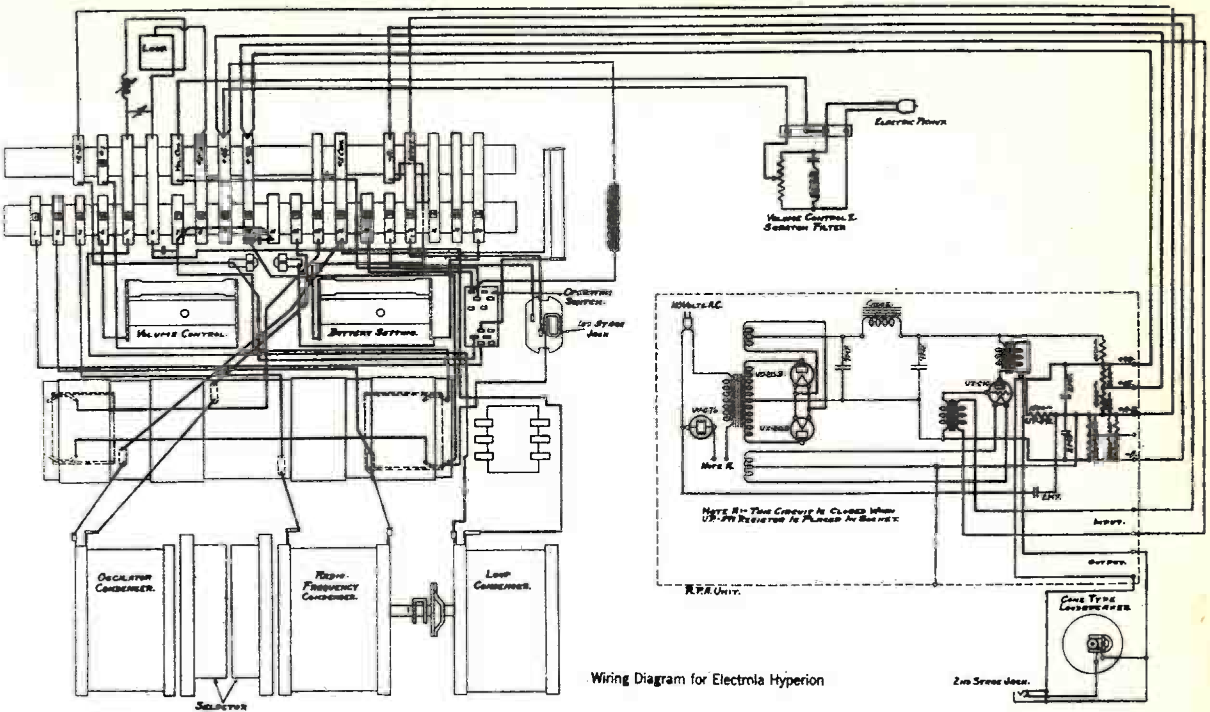

Wiring Diagram for Electrola Hyperion

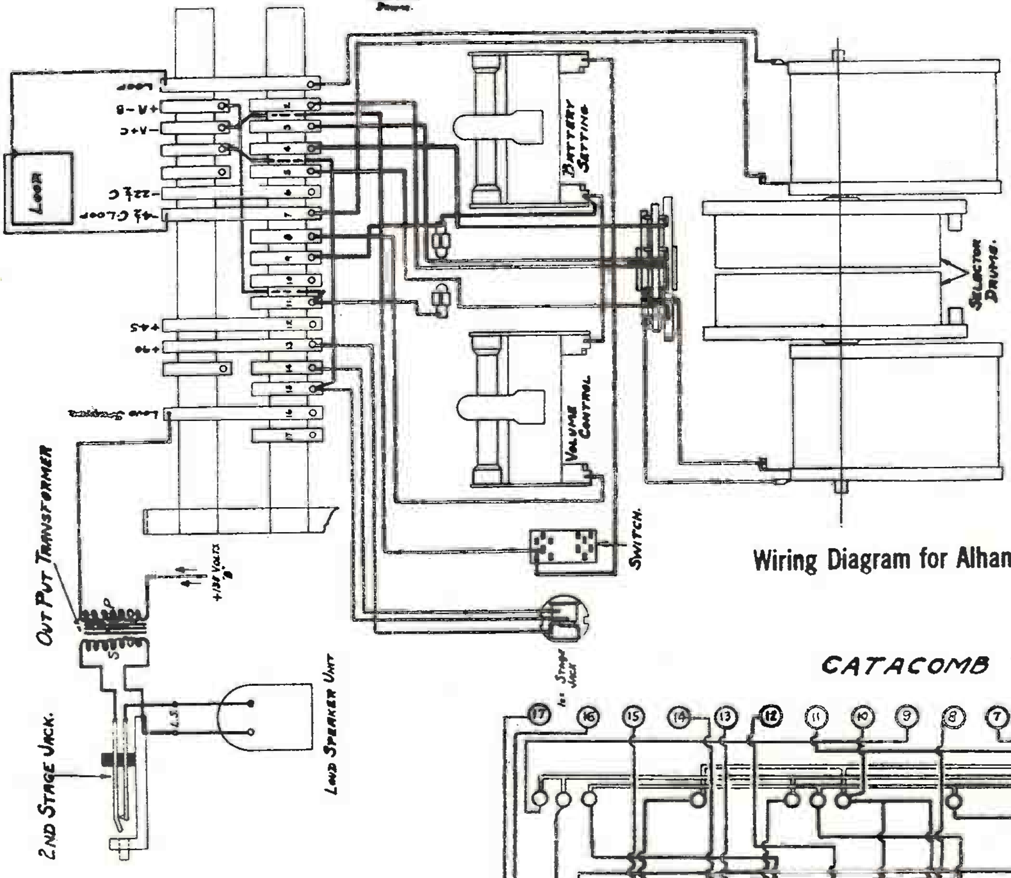

Wiring Diagram for Alhambra II and Florenza

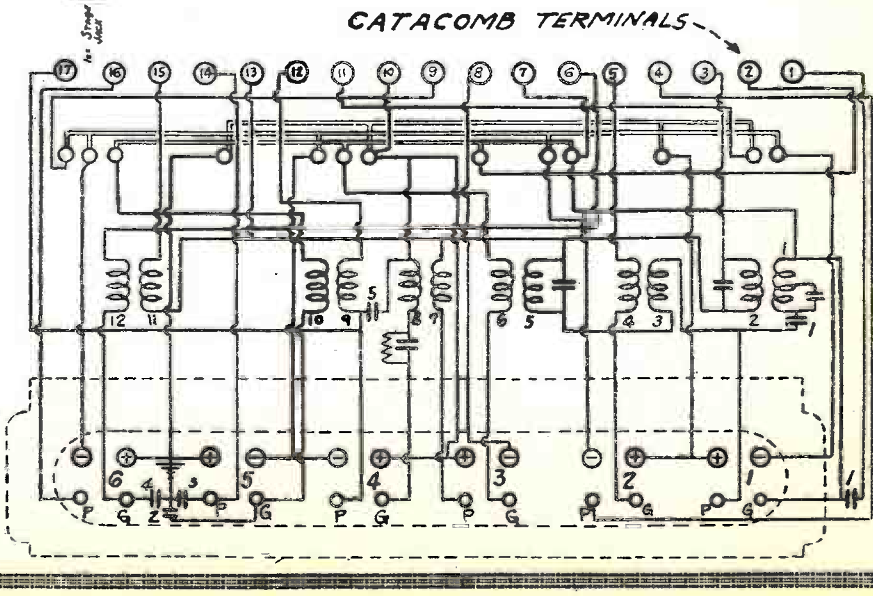

Radiola 25 Catacomb Continuity Diagram for

Alhambra II (7-2) and Florenza (9-1)

R.C.A.-VICTOR CO.
(VICTOR DIV.)

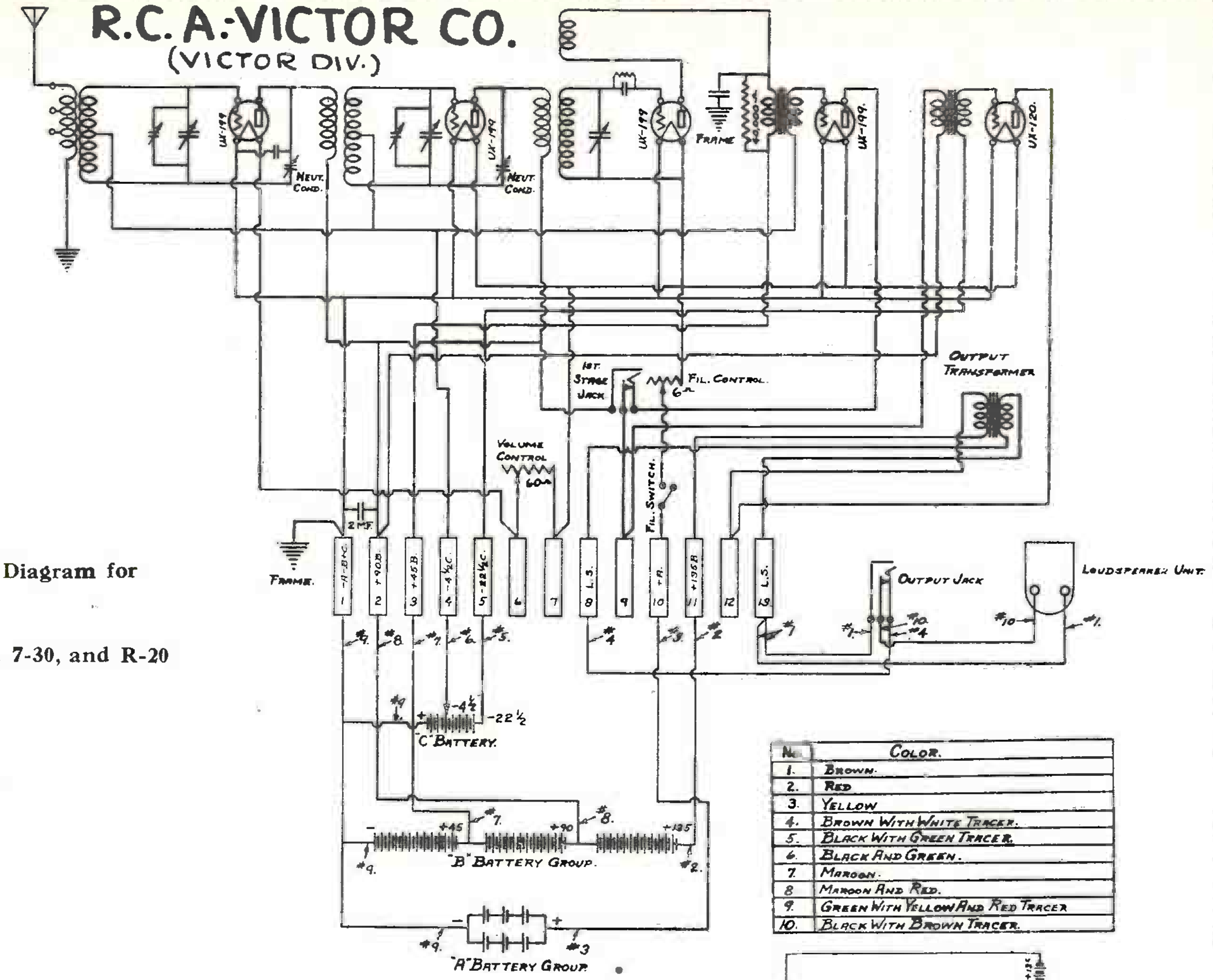

No.	COLOR.
1.	BROWN.
2.	RED.
3.	YELLOW
4.	BROWN WITH WHITE TRACER.
5.	BLACK WITH GREEN TRACER.
6.	BLACK AND GREEN.
7.	MAROON.
8	MAROON AND RED.
9.	GREEN WITH YELLOW AND RED TRACER
10.	BLACK WITH BROWN TRACER.

Wiring Diagram for

Models 7-3, 7-30, and R-20

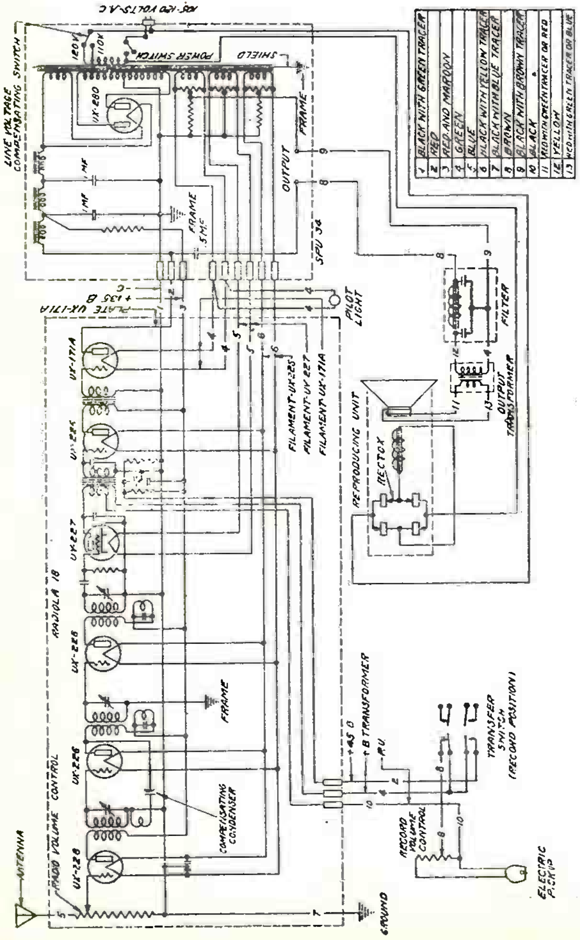

1	BLACK WITH GREEN TRACER
2	RED
3	RED AND MAROON
4	GREEN
5	BLUE
6	BLACK WITH YELLOW TRACER
7	BLACK WITH BLUE TRACER
8	BROWN
9	BLACK WITH BROWN TRACER
10	BLACK
11	RED WITH GREEN TRACER OR RED
12	YELLOW
13	RED WITH GREEN TRACER OR BLUE

Schematic Wiring Diagram Electrola Radiola 7-26 Above Serial No. 12000

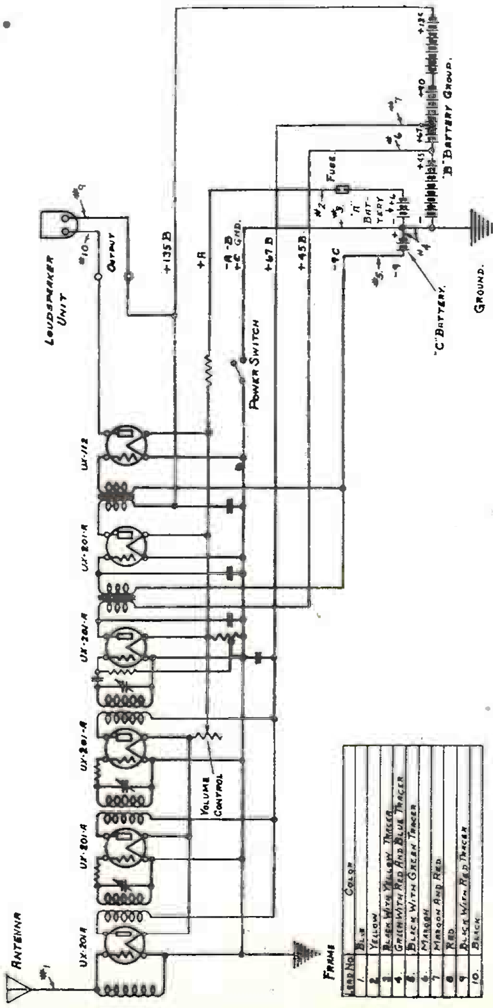

LEAD NO.	COLOR
1.	BLUE
2.	YELLOW
3.	BLACK WITH YELLOW TRACER
4.	GREEN WITH RED AND BLUE TRACER
5.	BLACK WITH GREEN TRACER
6.	MAROON
7	MAROON AND RED
8	RED
9	BLACK WITH RED TRACER
10.	BLACK

Wiring Diagram for Victor Radiola 16
(Used in Model 7-10)

R.C.A.-VICTOR CO.

(VICTOR DIV.)

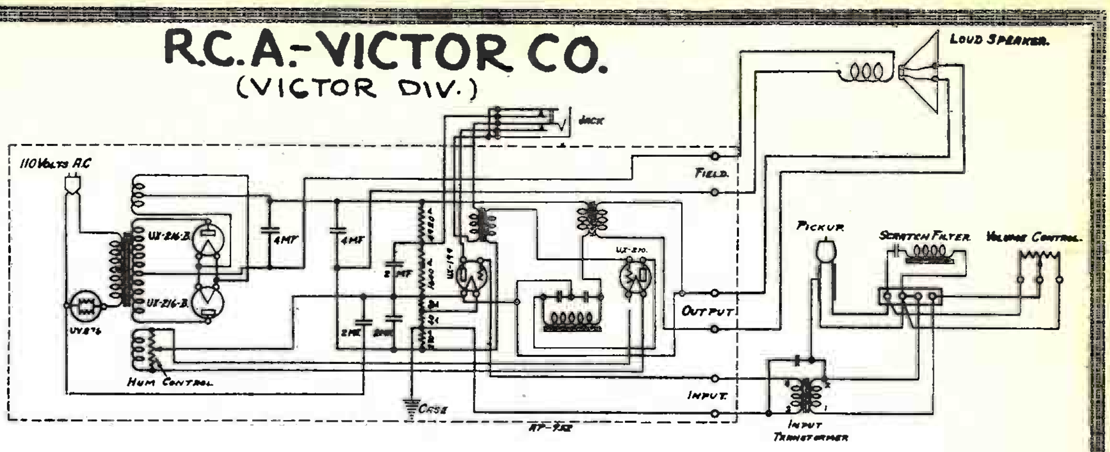

Wiring Diagram for Electrola 12-25

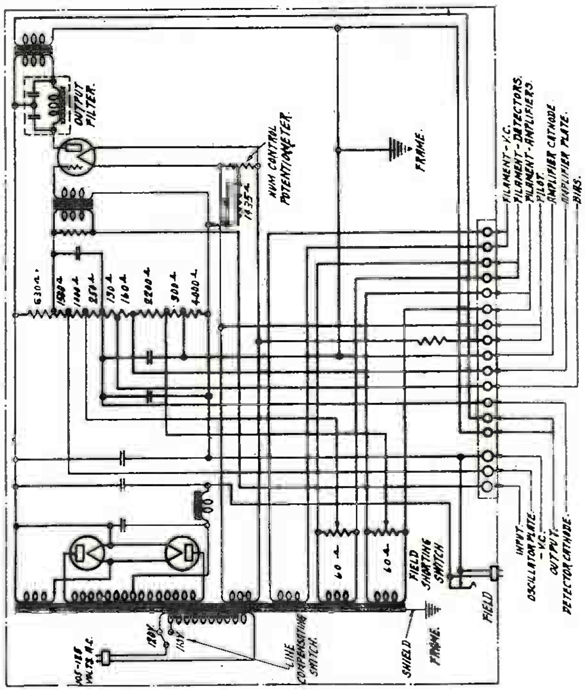

Schematic Wiring Diagram Power-Amplifier Unit AP-777-C

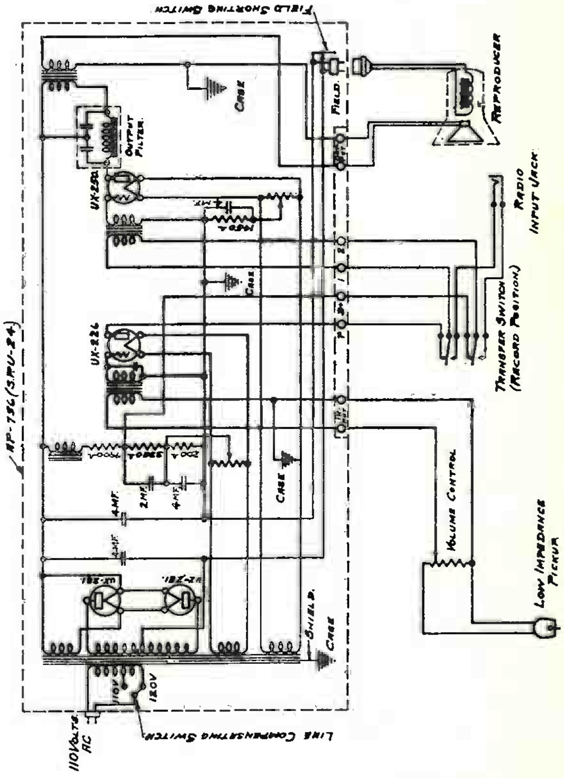

Wiring Diagram 12-15 above serial No. 2600

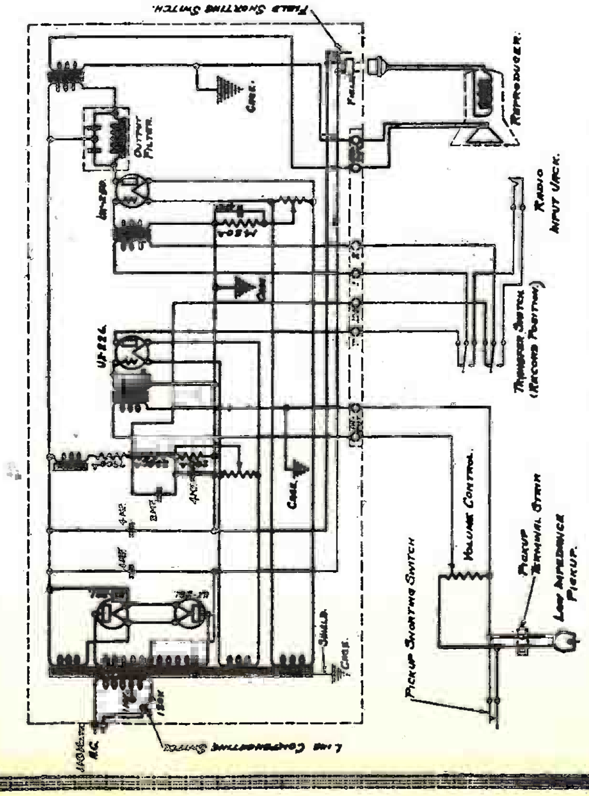

Wiring Diagram No. 10-70 above serial No. 2600

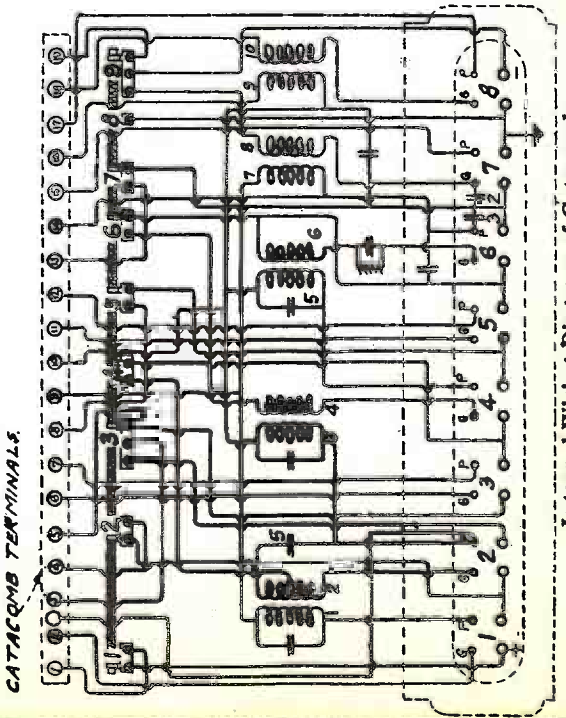

—Internal Wiring Diagram of Catacomb

RADIOLA-28

R.C.A.-VICTOR CO. (VICTOR DIV.)

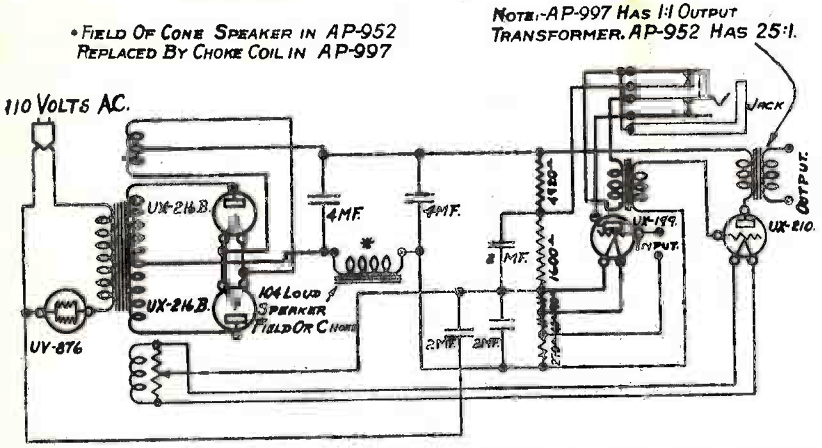

Wiring Diagram Power-Amplifier Units AP-952 and AP-997

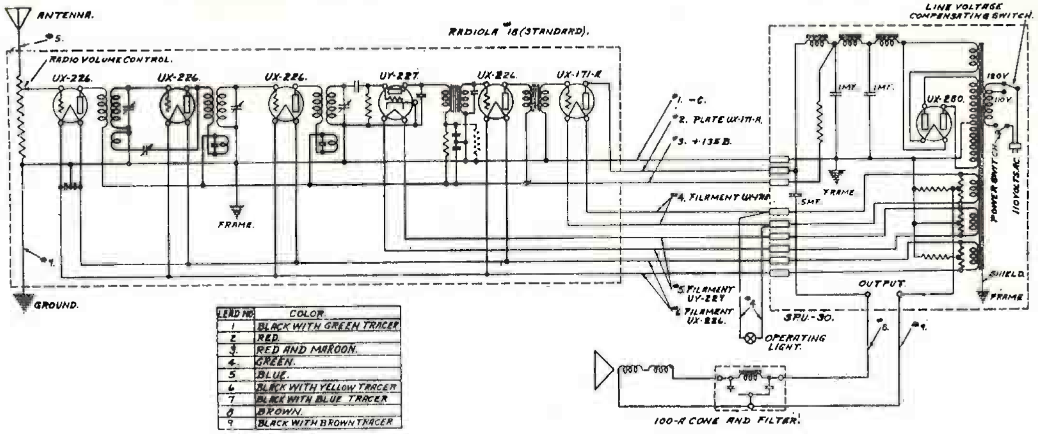

Lead No.	Color.
1	Black with green tracer
2	Red.
3.	Red and maroon.
4.	Green.
5	Blue.
6	Black with yellow tracer
7	Black with blue tracer
8	Brown.
9	Black with brown tracer

Wiring Diagram Victor Radiola 18
(Used in 7-11)

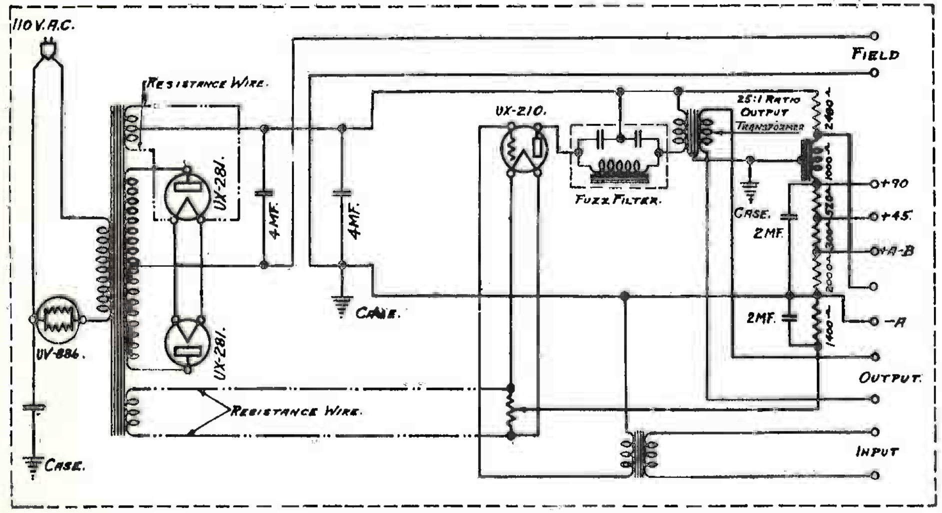

Wiring Diagram of Power-Amplifier Units AP-974-A, 951-A and 997-A
(Used in 9-25 and 9-55)

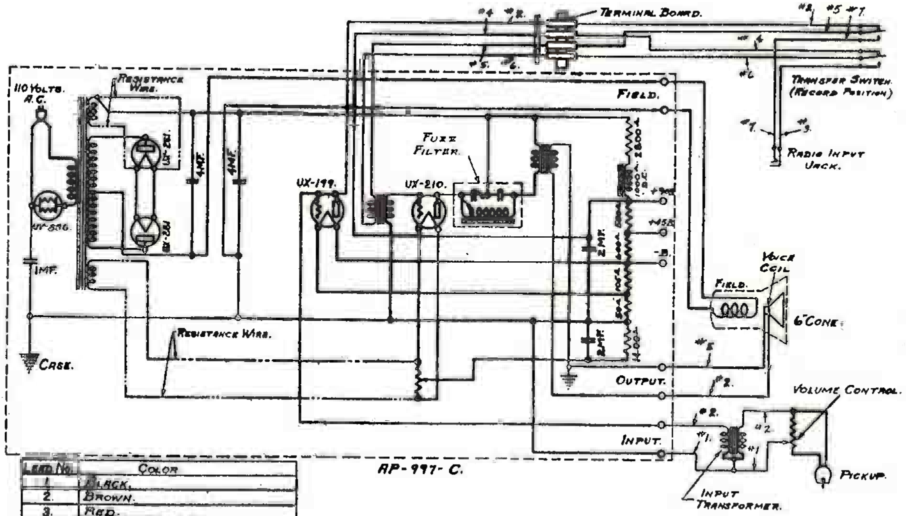

Lead No.	Color
1.	Black.
2.	Brown.
3.	Red.
4.	Red and Maroon.
5.	Black With Brown Tracer.
6.	Black With Red Tracer.
7.	Brown With White Tracer.

Wiring Diagram of 12-15

R.C.A.-VICTOR CO.

(VICTOR DIV.)

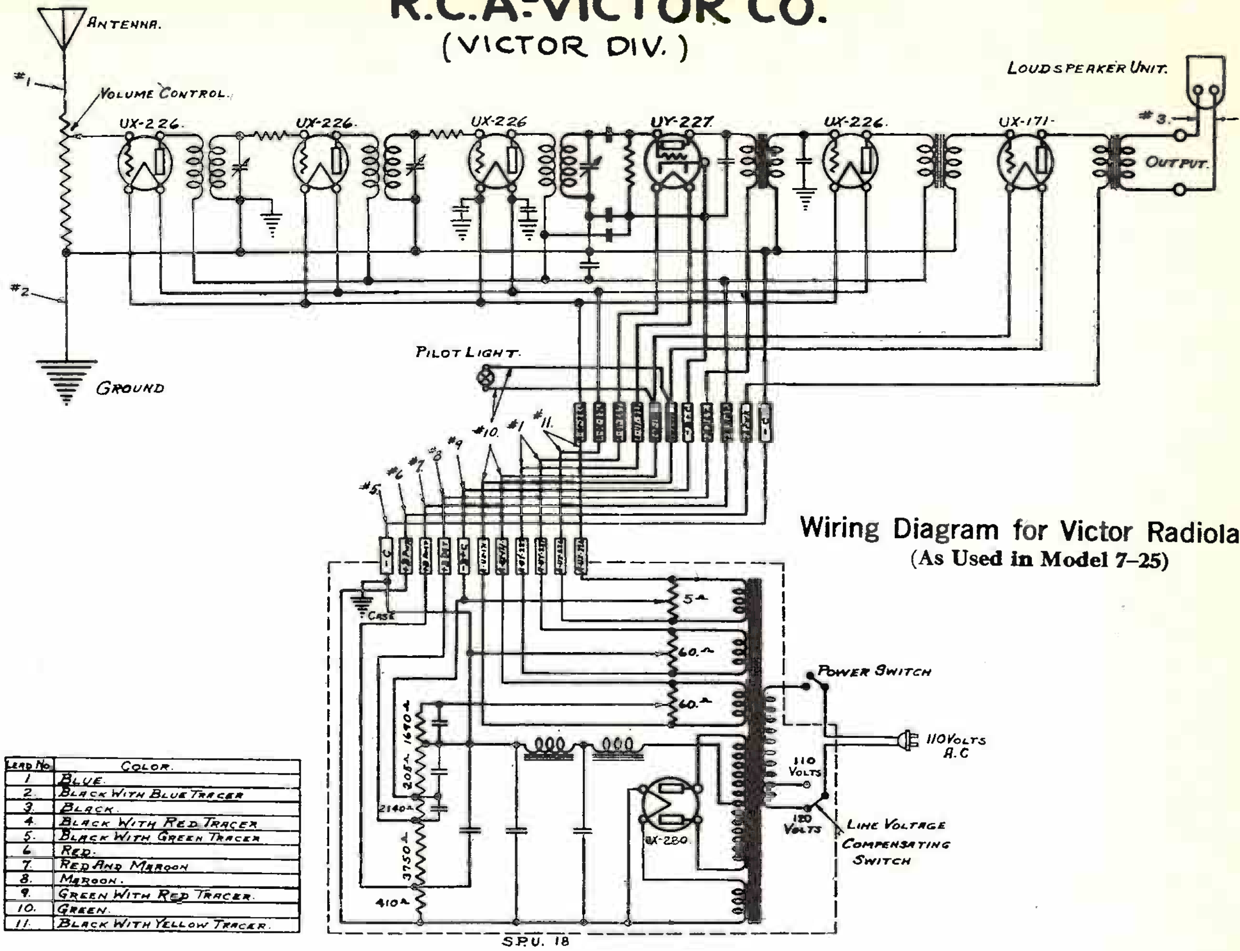

Wiring Diagram for Victor Radiola 17
(As Used in Model 7-25)

LEAD No.	COLOR.
1	BLUE.
2.	BLACK WITH BLUE TRACER
3.	BLACK.
4.	BLACK WITH RED TRACER
5.	BLACK WITH GREEN TRACER
6	RED.
7.	RED AND MAROON
8.	MAROON.
9.	GREEN WITH RED TRACER.
10.	GREEN.
11.	BLACK WITH YELLOW TRACER.

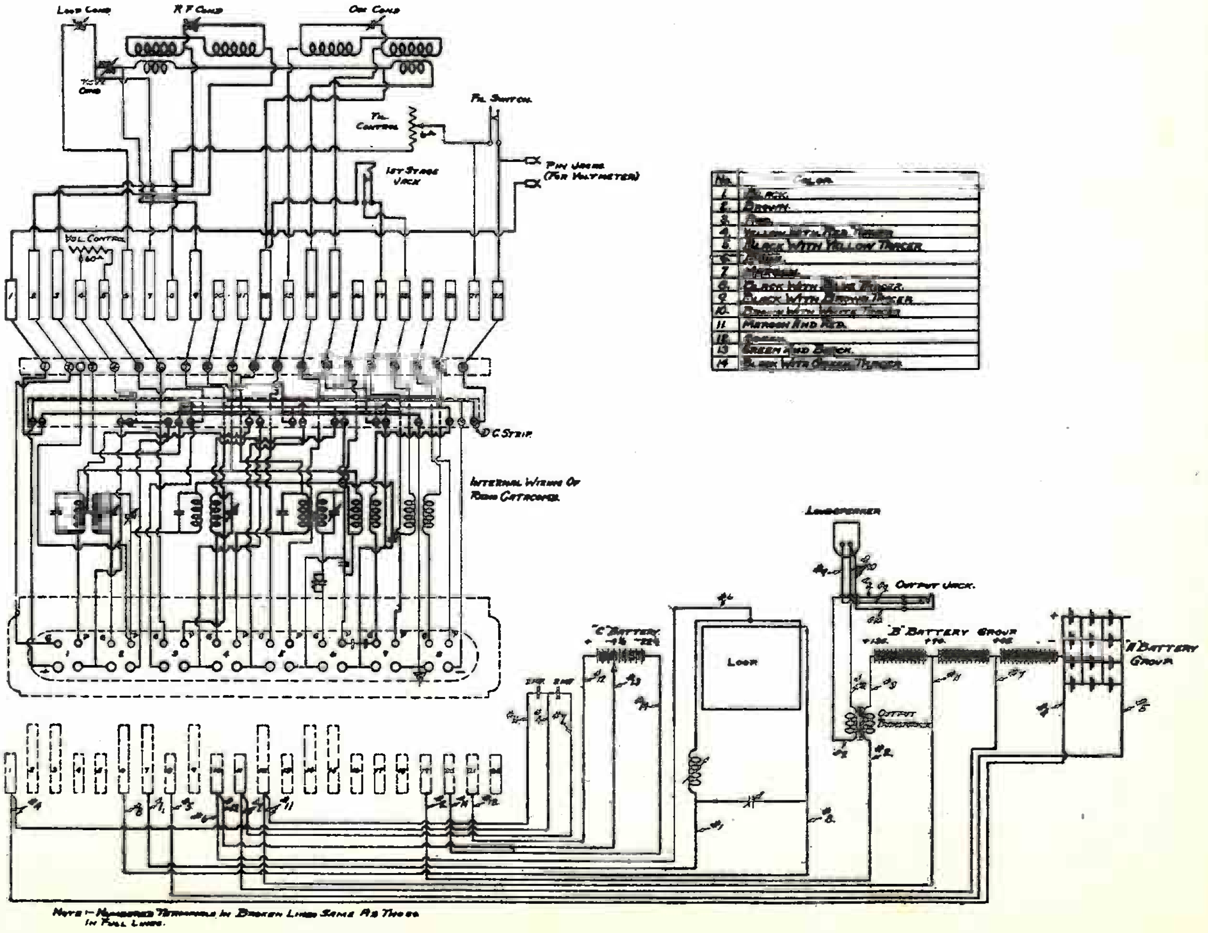

No.	COLOR.
1.	BLACK.
2.	BROWN.
3.	RED.
4.	YELLOW WITH RED TRACER.
5.	BLACK WITH YELLOW TRACER.
6.	YELLOW.
7.	MAROON.
8.	BLACK WITH BLUE TRACER.
9.	BLACK WITH BROWN TRACER.
10.	BROWN WITH WHITE TRACER.
11	MAROON AND RED.
12.	GREEN.
13	GREEN AND BLACK.
14	BLACK WITH GREEN TRACER.

Wiring Diagram for 9-15

R.C.A. VICTOR CO.
(VICTOR DIV.)

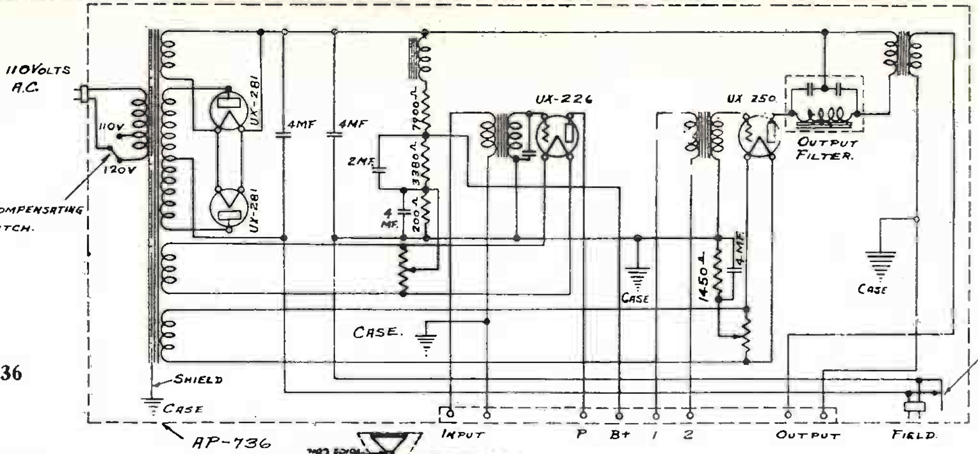

Wiring Diagram of

Power-Amplifier Unit AP-736

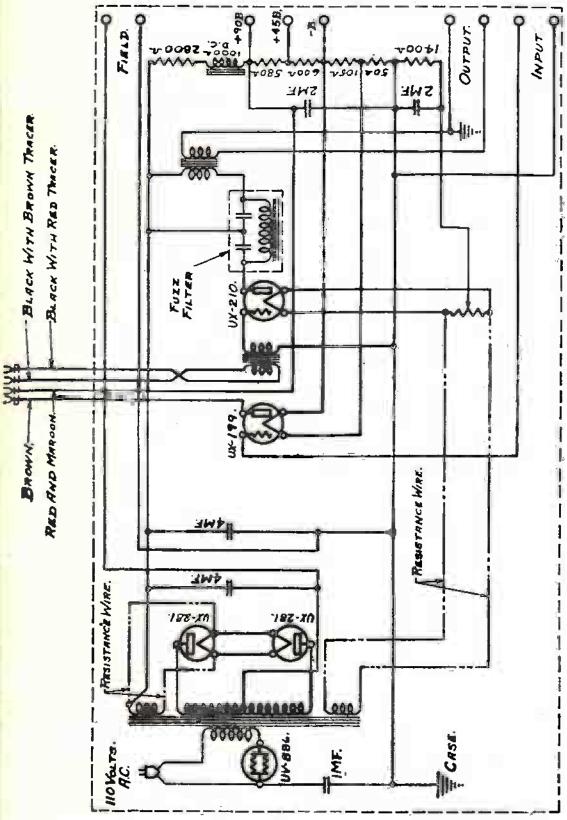

Used in 12-15

Wiring Diagram of Power-Amplifier Unit AP-997-C

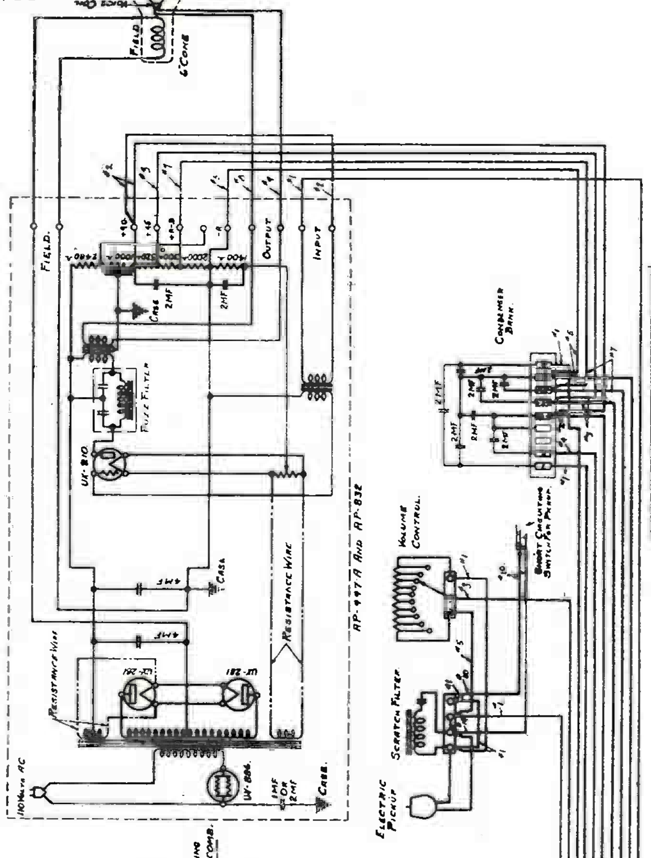

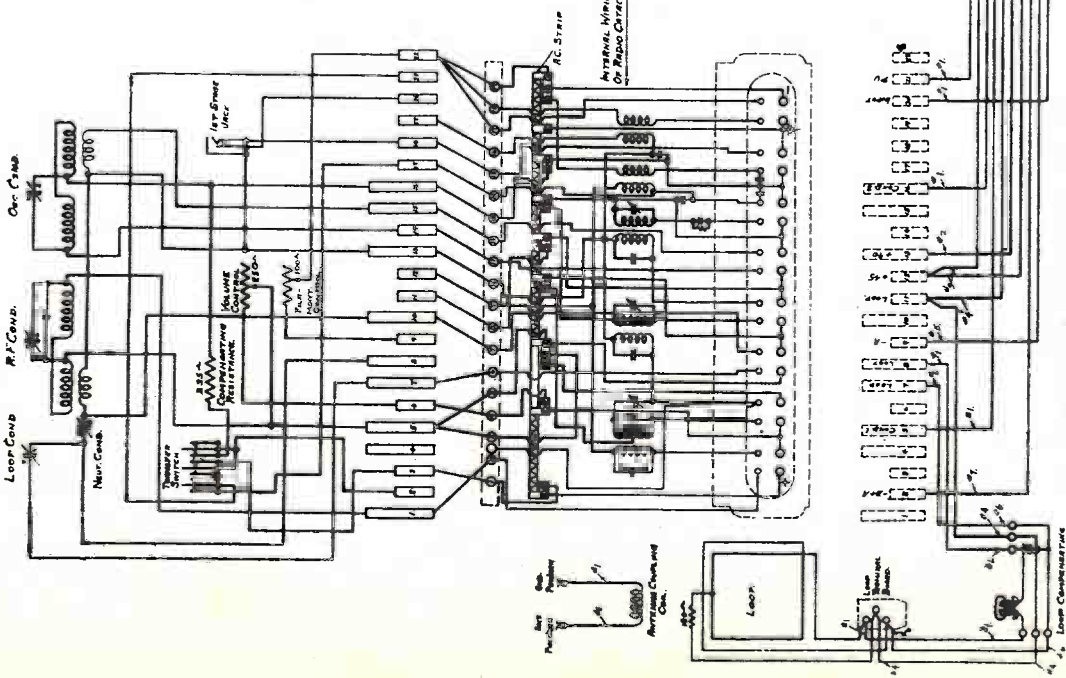

Wiring Diagram for Model 9-55

Lead No.	Color
1.	Black
2.	Red.
3	Maroon.
4	Blue.
5.	Black With Yellow Tracer.
6	Black With Blue Tracer
7	Yellow With Red Tracer
8	Brown
9	Brown With White Tracer
10.	Black With Red Tracer

Note:- Numbered Terminals In Broken Lines Same As Those In Full Lines.

R.C.A.-VICTOR CO.

(VICTOR DIV.)

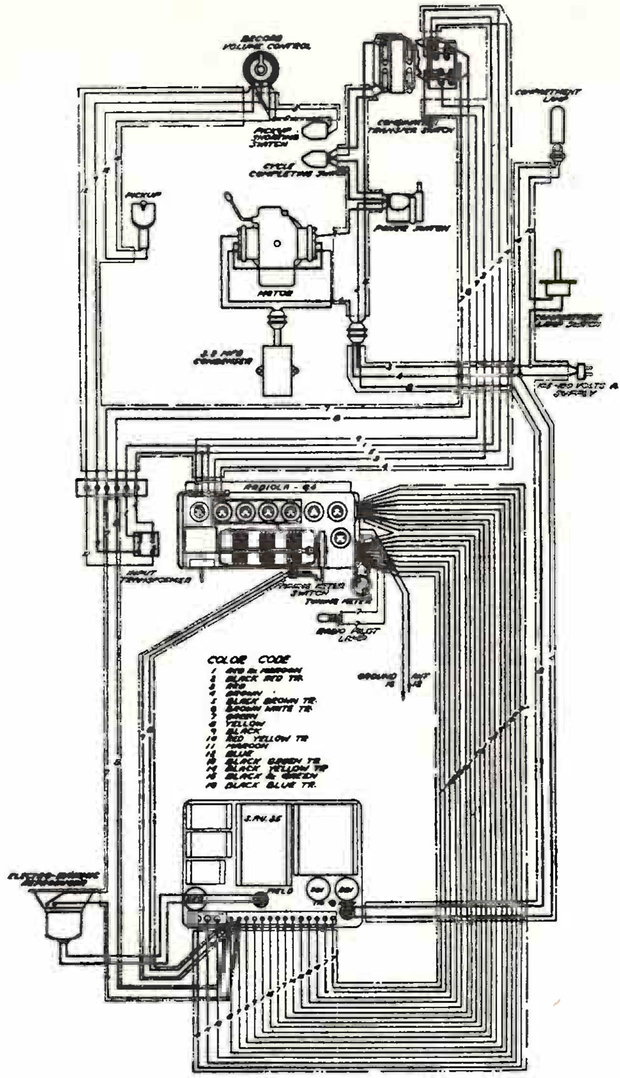

Cable Wiring Diagram Automatic Electrola Radiola 9-54 above Serial No. 6401

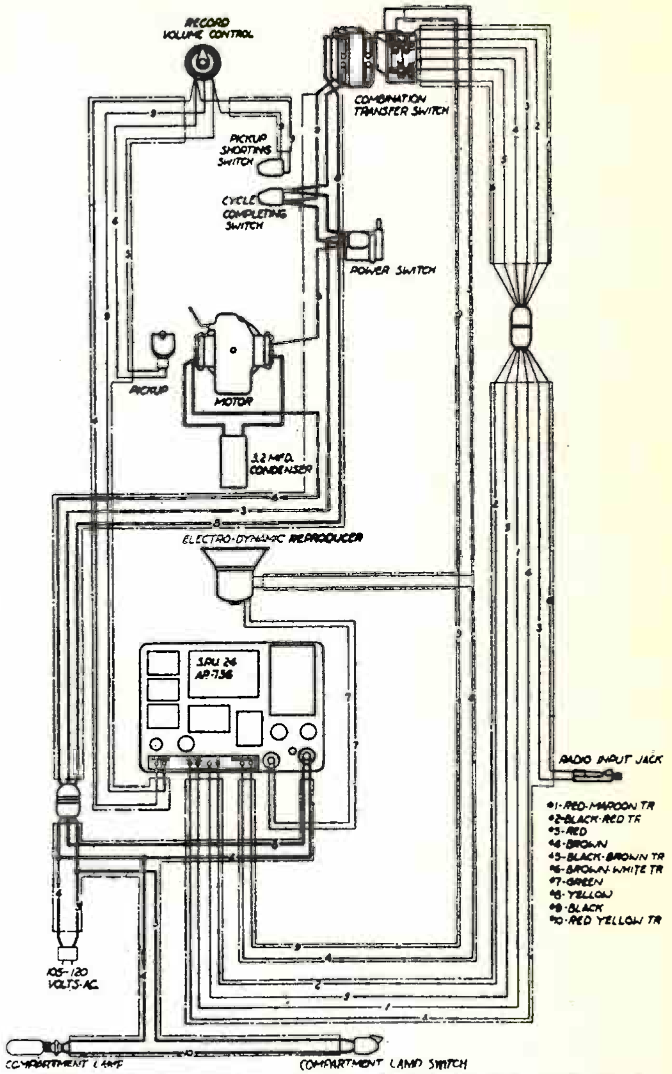

Cable Wiring Diagram Automatic Electrola 10-69, above Serial No. 5001

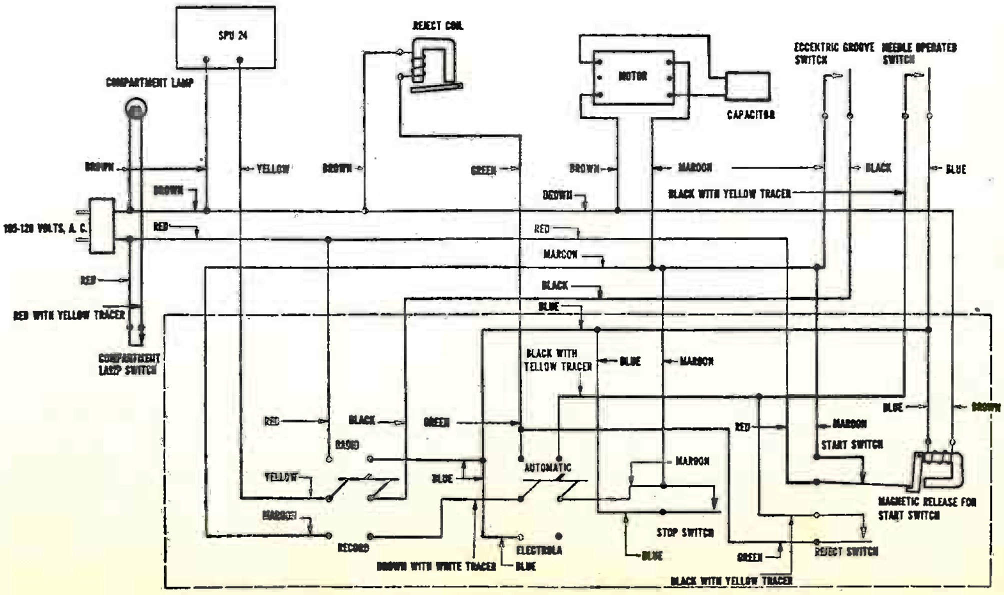

A. C. Power Wiring Diagram Automatic Electrola No. 10-69

R.C.A.-VICTOR CO.

(VICTOR DIV.)

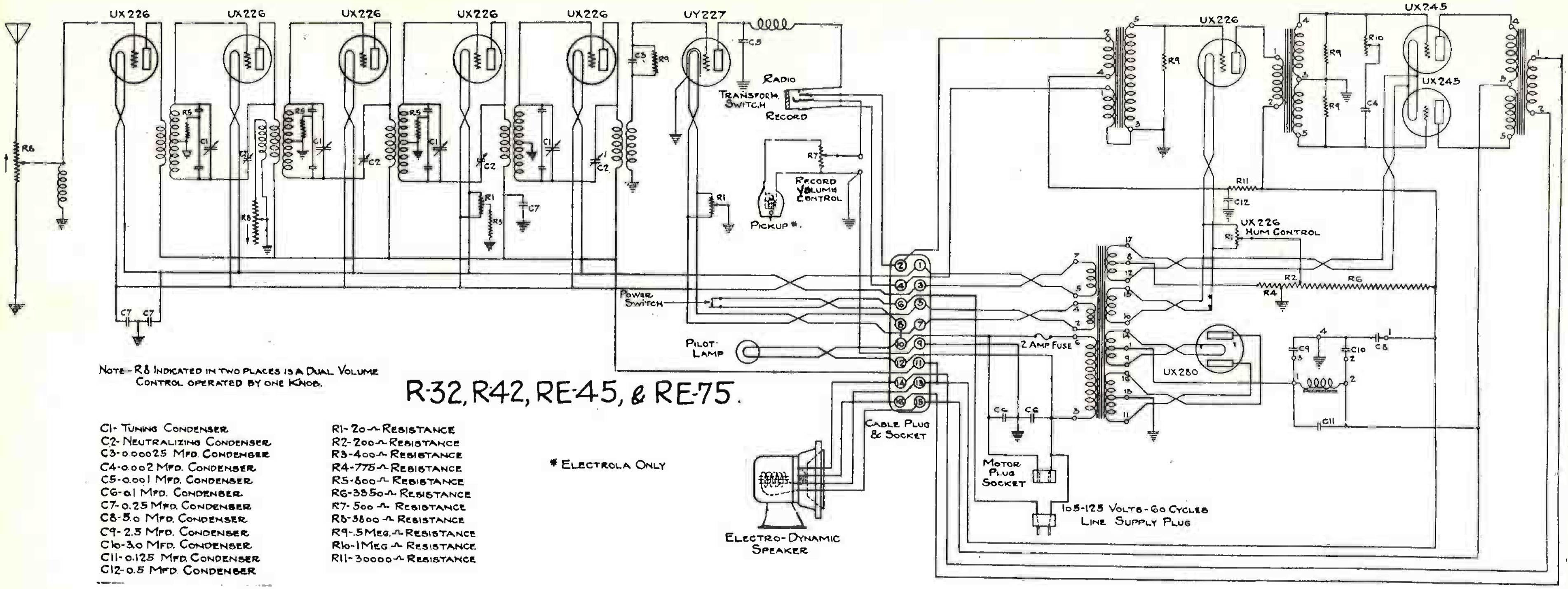

R-32, R-42, RE-45, & RE-75.

Note - R8 Indicated in two places is a Dual Volume Control operated by one Knob.

C1- Tuning Condenser
C2- Neutralizing Condenser
C3-0.00025 Mfd. Condenser
C4-0.002 Mfd. Condenser
C5-0.001 Mfd. Condenser
C6-0.1 Mfd. Condenser
C7-0.25 Mfd. Condenser
C8-5.0 Mfd. Condenser
C9-2.5 Mfd. Condenser
C10-3.0 Mfd. Condenser
C11-0.125 Mfd. Condenser
C12-0.5 Mfd. Condenser

R1-20Ω Resistance
R2-200Ω Resistance
R3-400Ω Resistance
R4-775Ω Resistance
R5-800Ω Resistance
R6-3350Ω Resistance
R7-500Ω Resistance
R8-3800Ω Resistance
R9-.5 Meg.Ω Resistance
R10-1 Meg Ω Resistance
R11-30000Ω Resistance

* Electrola Only

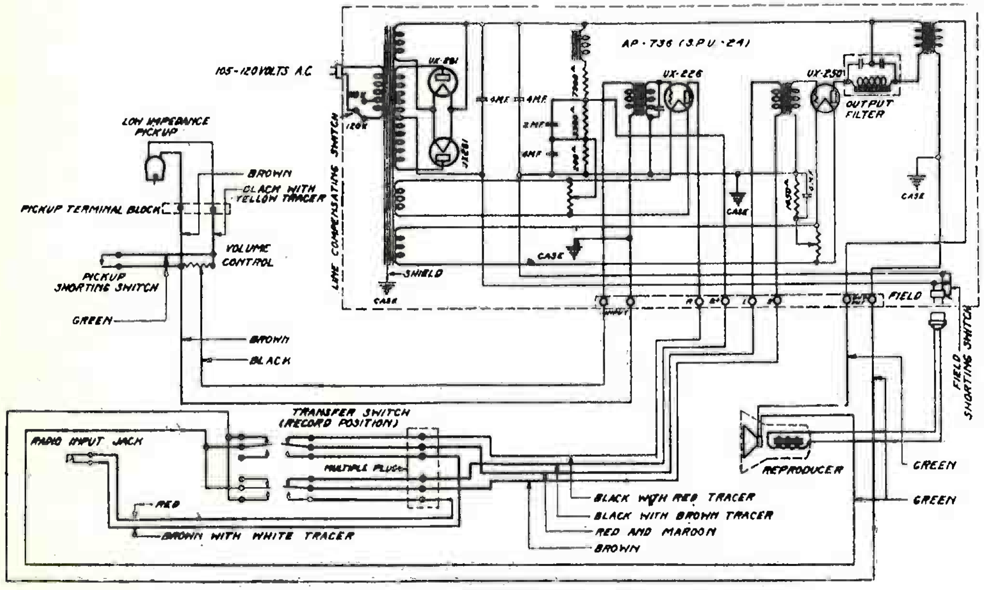

Schematic Wiring Diagram Automatic Electrola No. 10-69

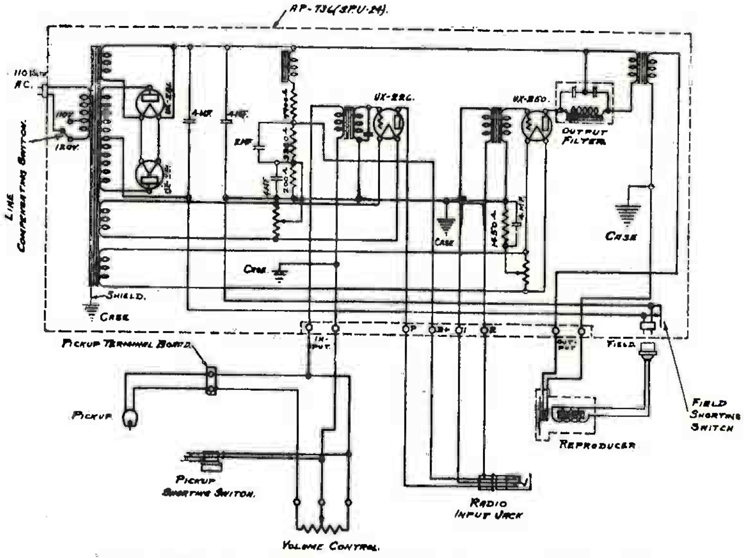

Wiring Diagram Electrola 10-51 above serial No. 800

R.C.A.-VICTOR CO.

(VICTOR DIV.)

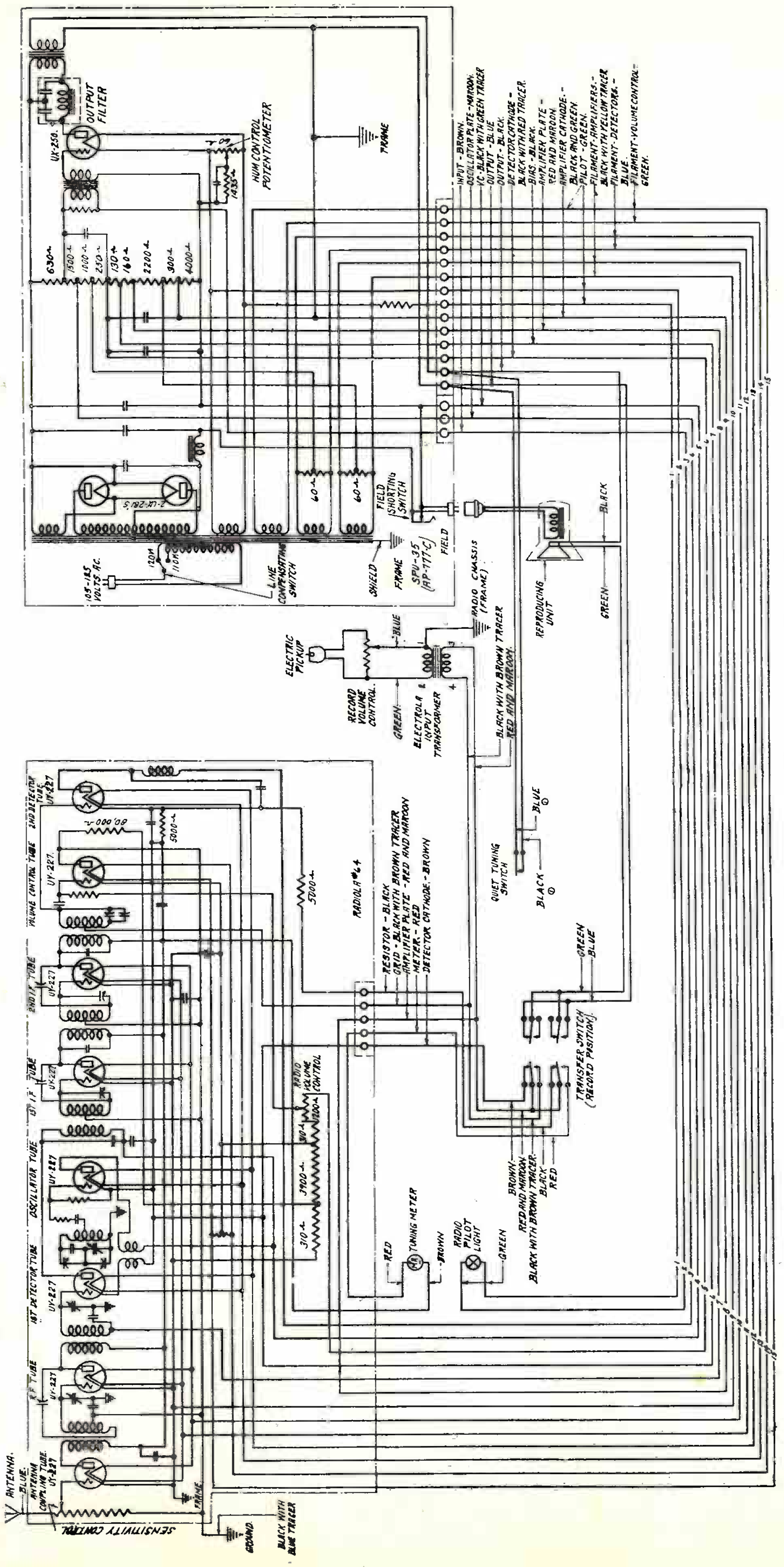

Schematic Wiring Diagram Electrola Radiola Model 9-18

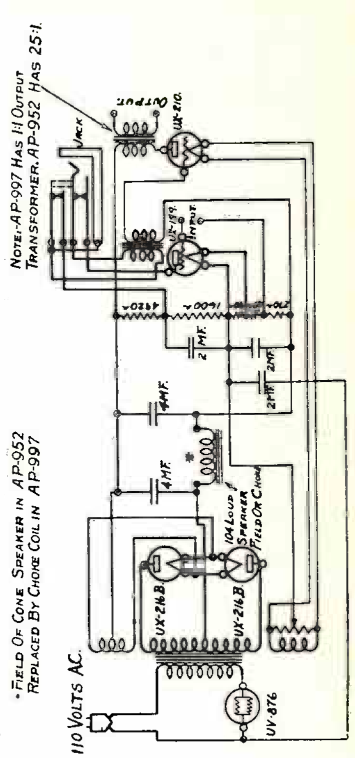

Note-AP-997 Has 1:1 Output Transformer. AP-952 Has 25:1.

*Field Of Cone Speaker In AP-952 Replaced By Choke Coil In AP-997

Wiring Diagram AP 952, and AP 997 (RPA-5 and RPA-5—Special)

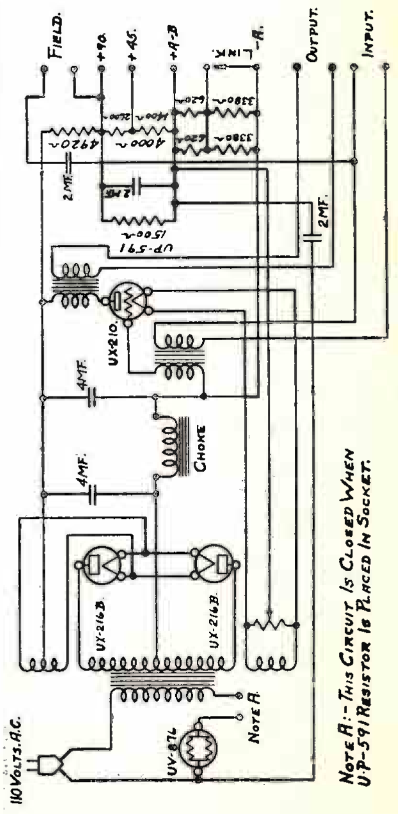

Note A:- This Circuit Is Closed When UP-591 Resistor Is Placed In Socket.

Wiring Diagram AP 947 (RPA 1-A)

R.C.A.-VICTOR CO. (VICTOR DIV.)

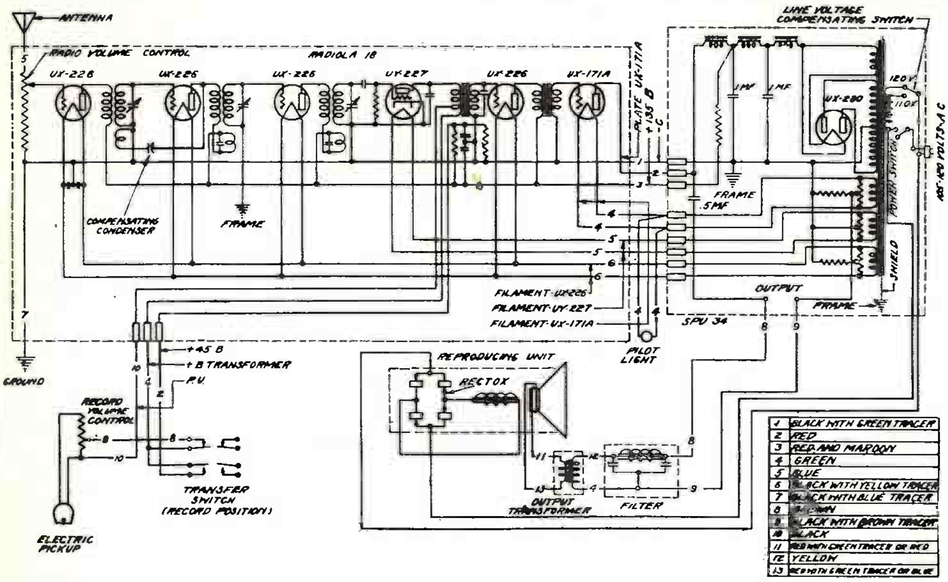

1	BLACK WITH GREEN TRACER
2	RED
3	RED AND MAROON
4	GREEN
5	BLUE
6	BLACK WITH YELLOW TRACER
7	BLACK WITH BLUE TRACER
8	BROWN
9	BLACK WITH BROWN TRACER
10	BLACK
11	RED WITH GREEN TRACER OR RED
12	YELLOW
13	RED WITH GREEN TRACER OR BLUE

Wiring Diagram Electrola Radiola 7-26 Above Serial No. 12000

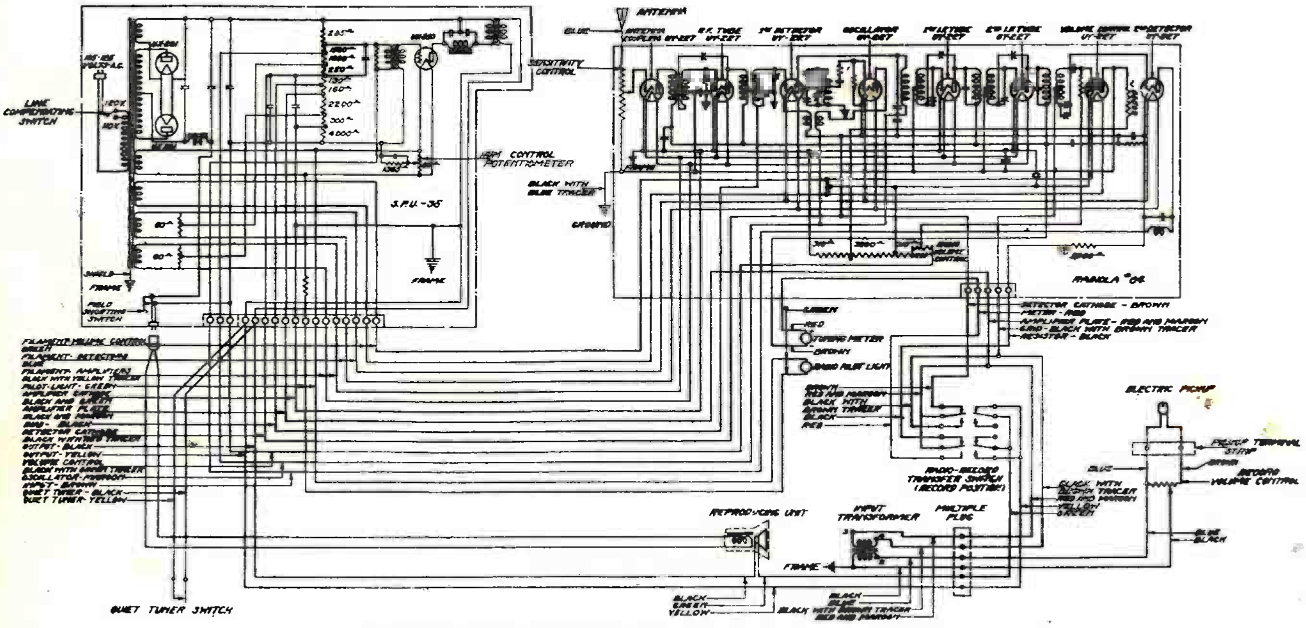

Schematic Wiring Diagram Electrola Radiola 9-54

Lead No	Color.
1.	Black.
2.	Brown.
3.	Red.
4.	Black With Red Tracer.
5.	Black With Yellow Tracer.
6.	Maroon.
7.	Maroon And Red.
8.	Black With Brown Tracer.
9.	Brown With White Tracer.

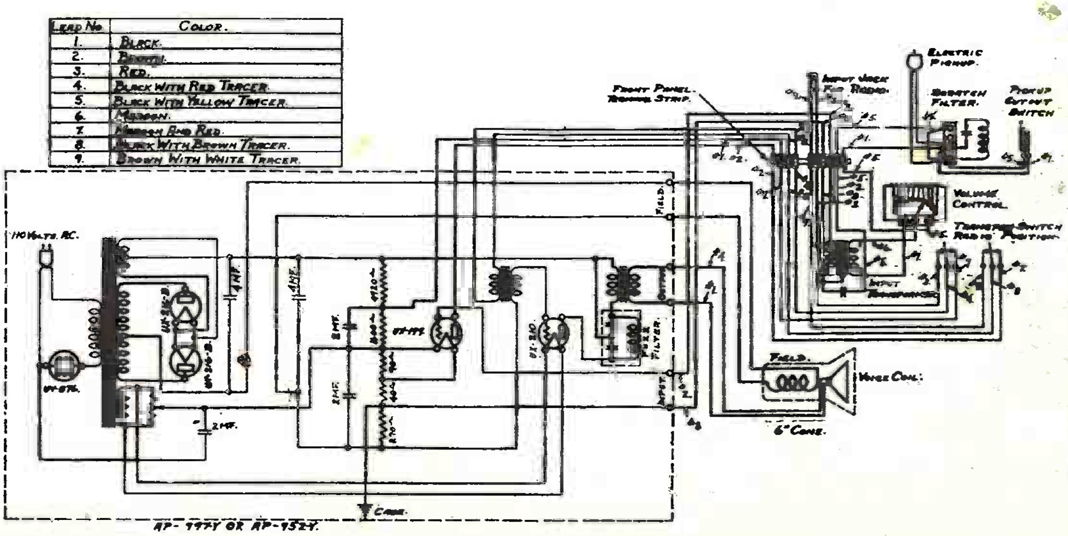

Wiring Diagram—Electrola 10-70

R.C.A.-VICTOR CO.

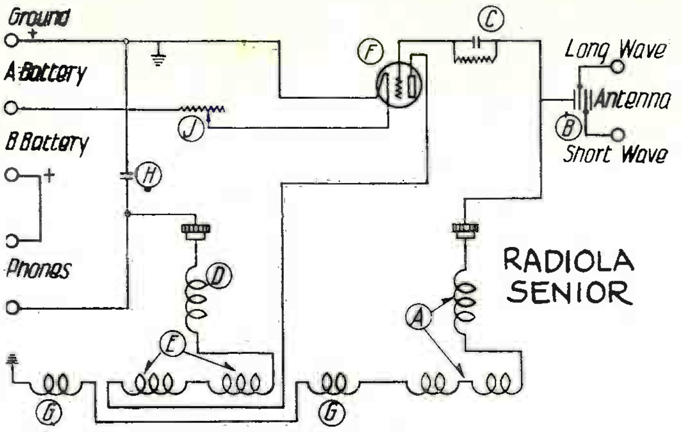

RADIOLA SENIOR

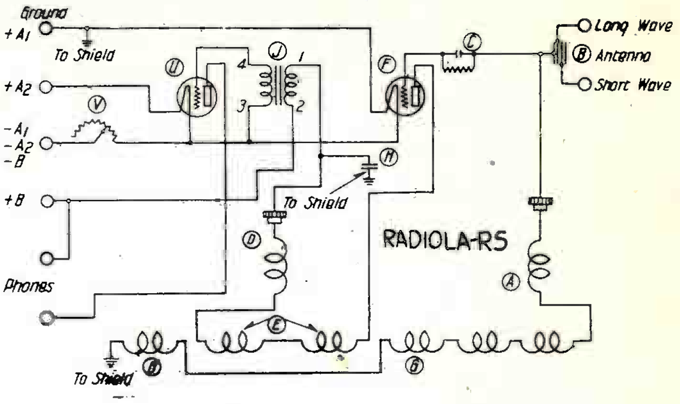

RADIOLA-RS

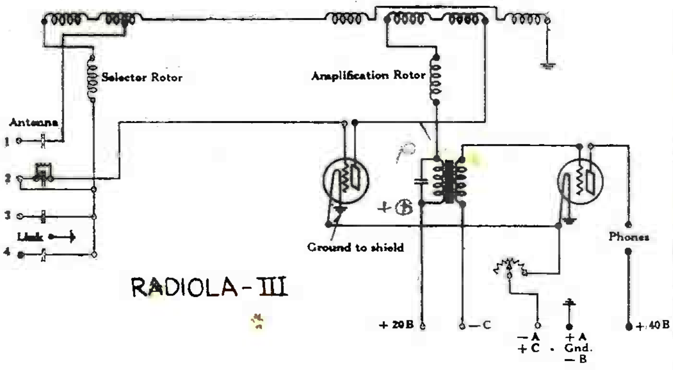

RADIOLA-III

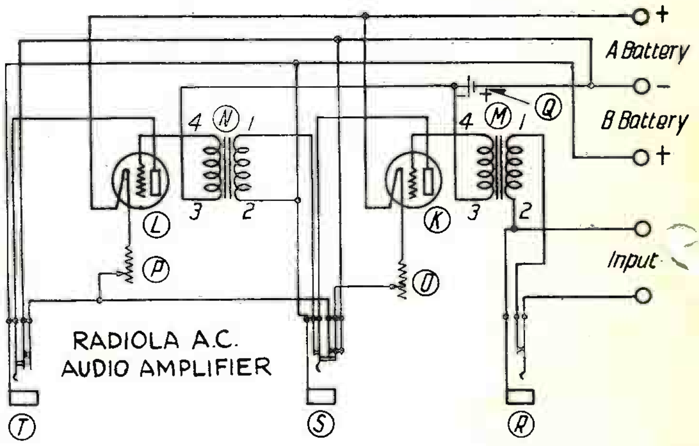

RADIOLA A.C. AUDIO AMPLIFIER

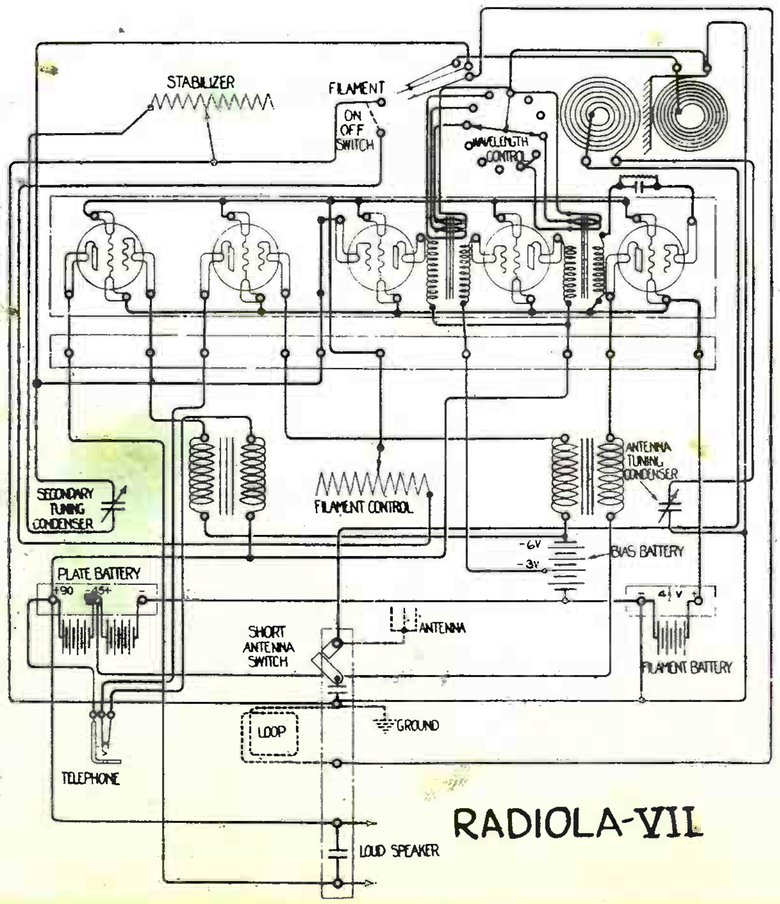

RADIOLA-VII

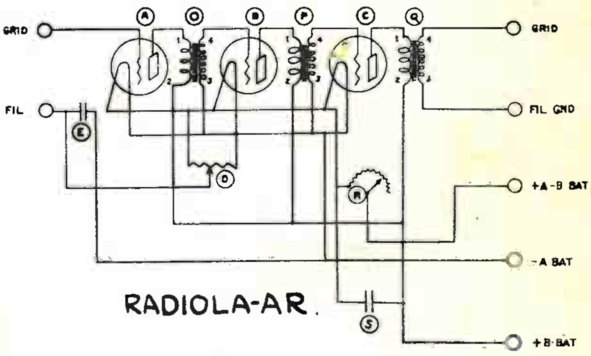

RADIOLA-AR.

BALANCED AMPLIFIER

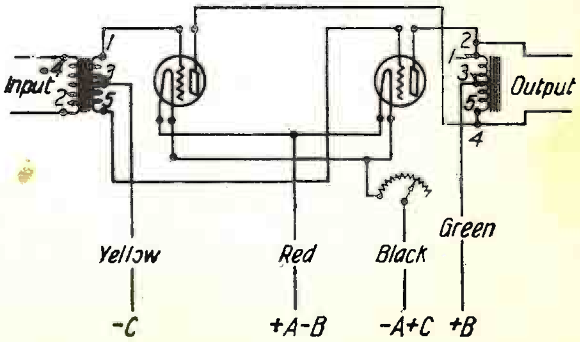

R.C.A.-VICTOR CO.

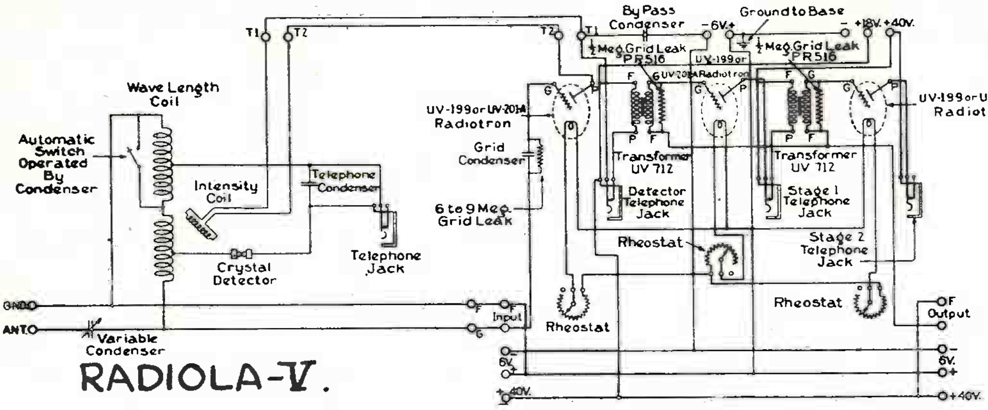

RADIOLA-V.

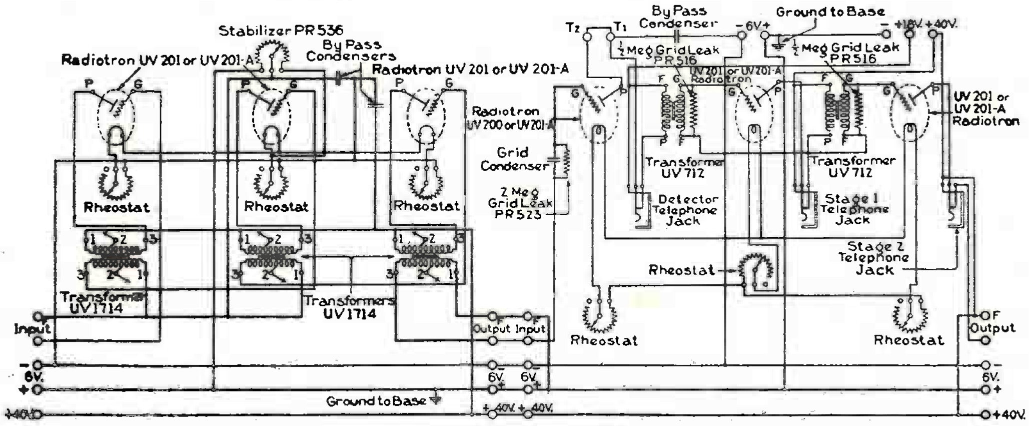

RADIOLA-VI

RADIOLA-II.

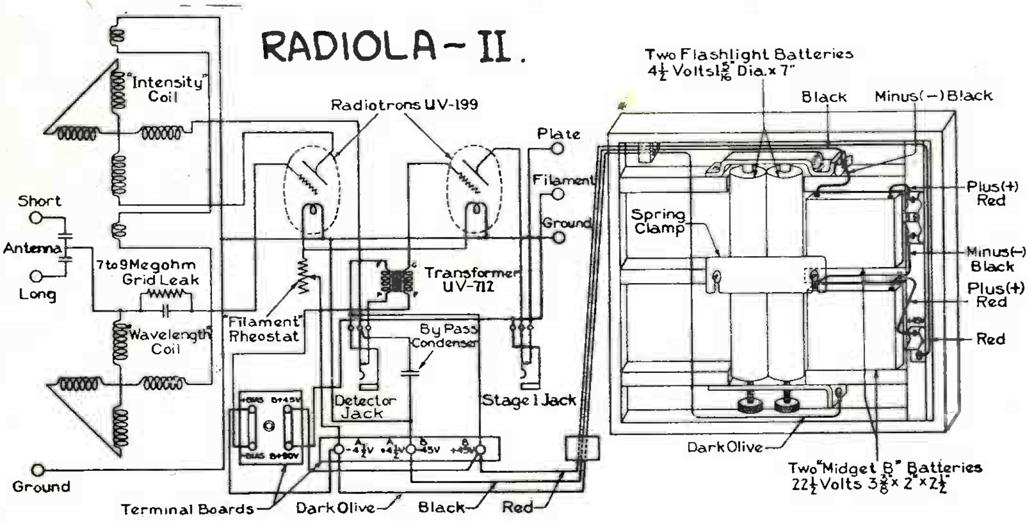

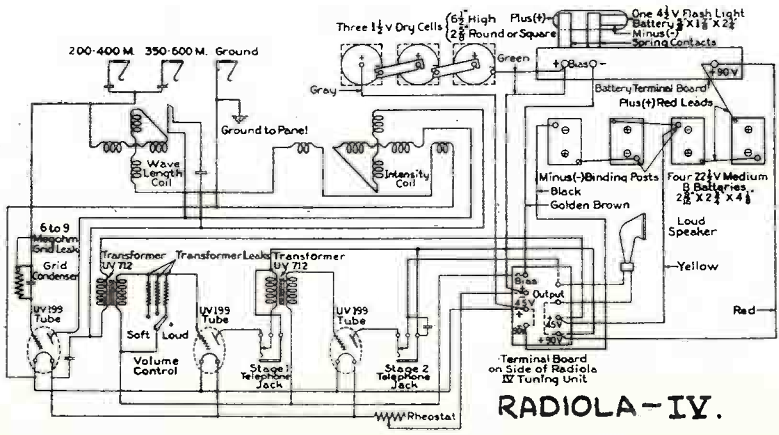

RADIOLA-IV.

R.C.A.-VICTOR CO.

RADIOLA-III-A

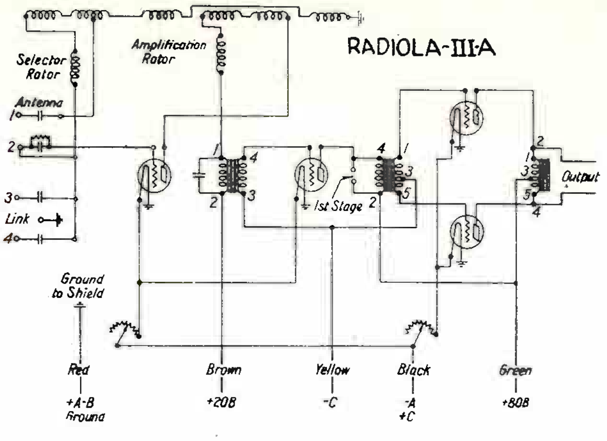

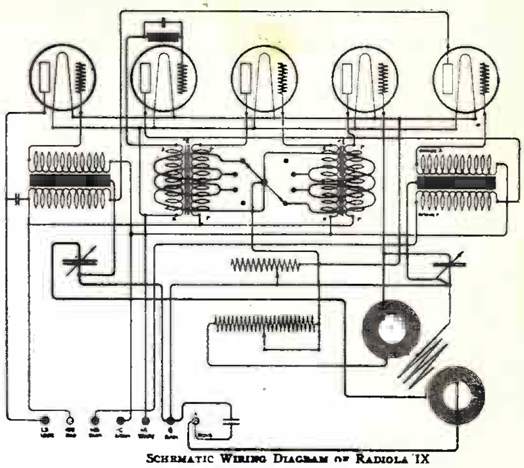

SCHEMATIC WIRING DIAGRAM OF RADIOLA IX

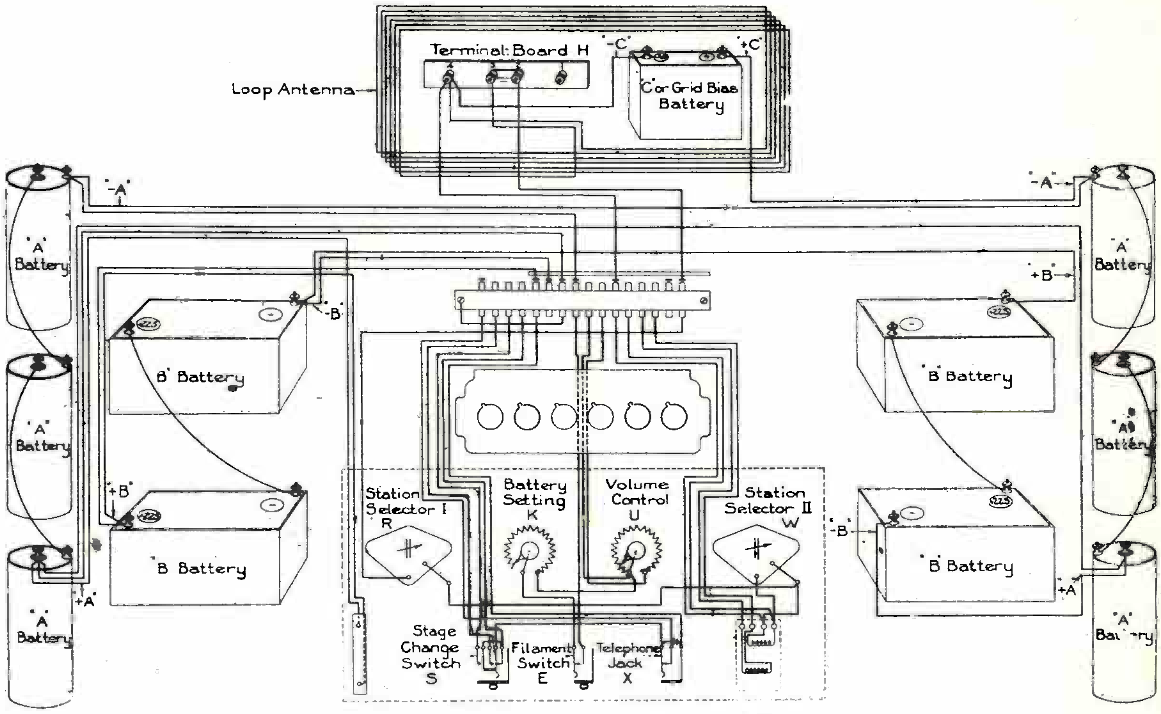

Connection Diagram of Radiola Super-Heterodyne

RADIOLA GRAND

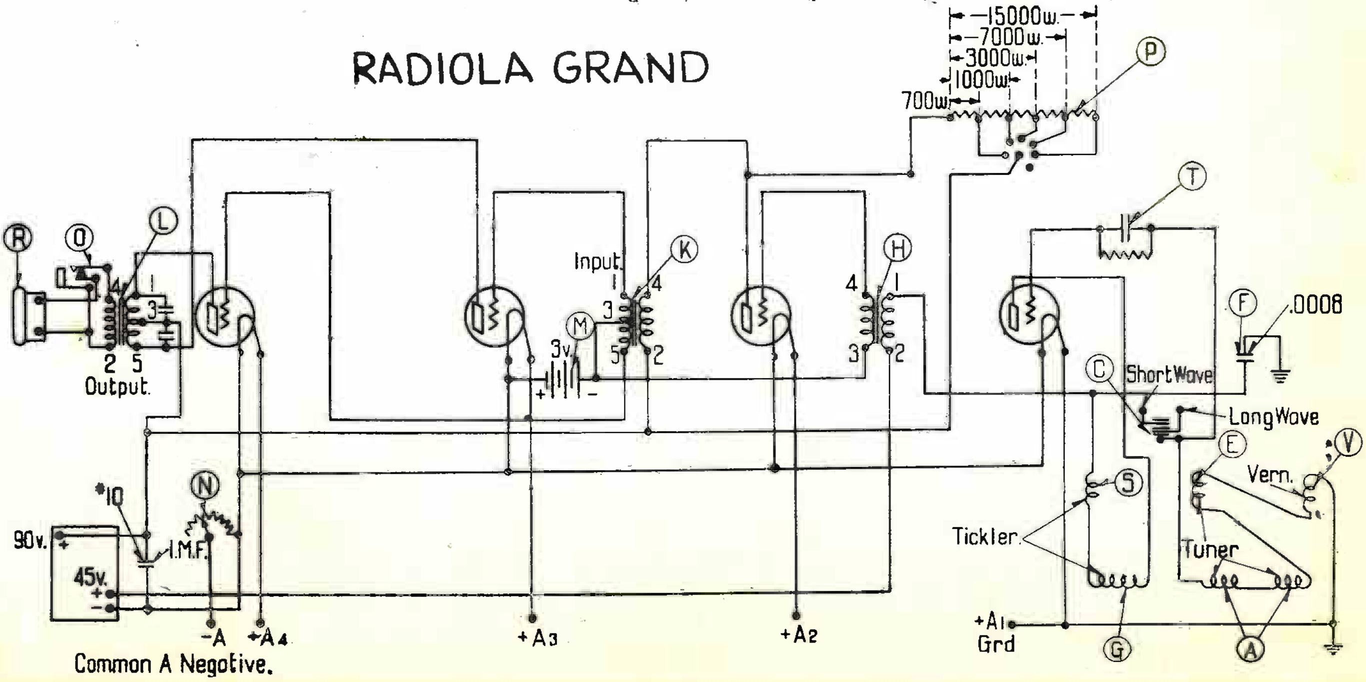

R.C.A.-VICTOR CO.

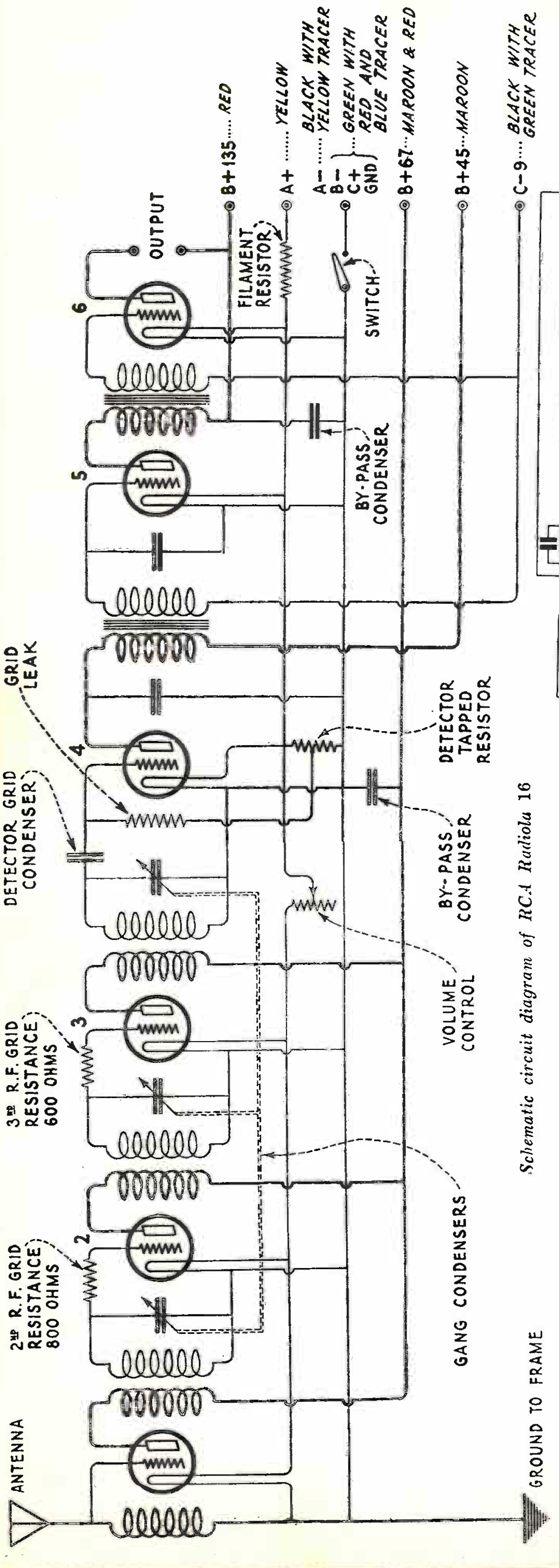

Schematic circuit diagram of RCA Radiola 16

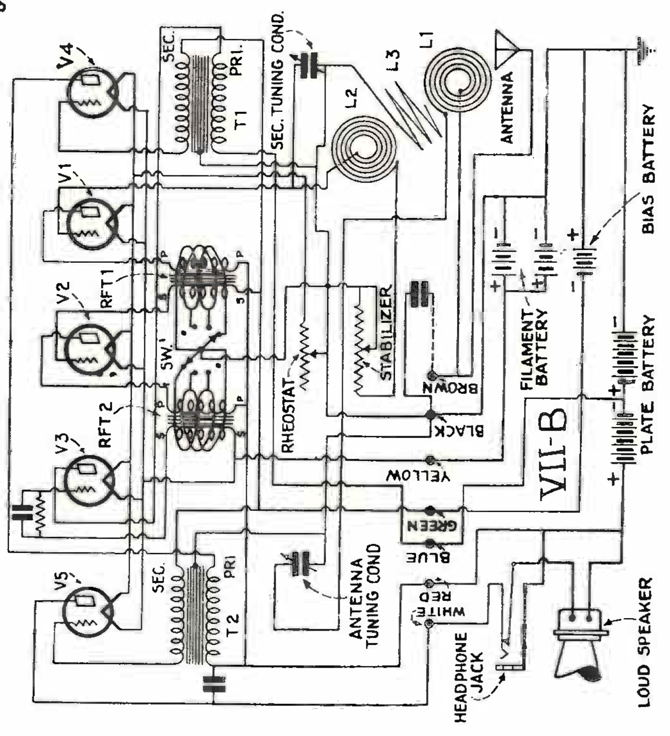

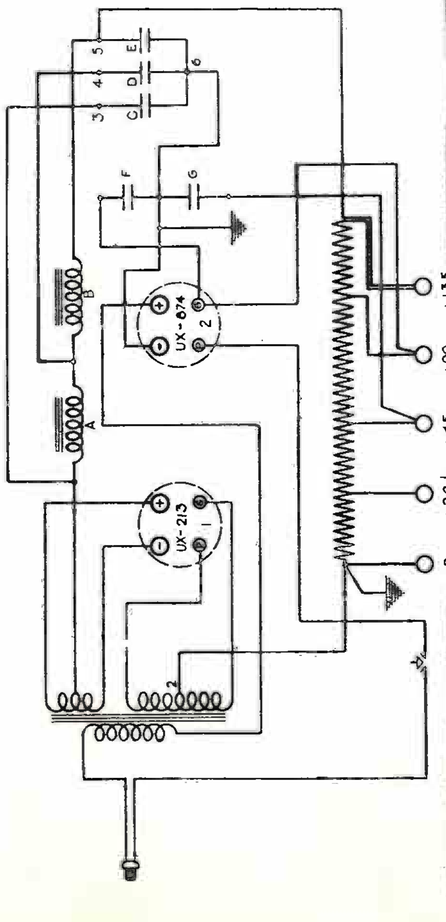

CONTINUITY DIAGRAM

Radio Corp of America
National Service Division
233 Broadway NYC

RCA Duo-Rectron

Model AP-937

Dwg NS-DR-1D | Date 4-9-26

Dwn by JM | Ckd by C.R.U. | App'd by JM

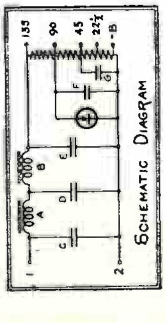

R.C.A.-VICTOR CO.

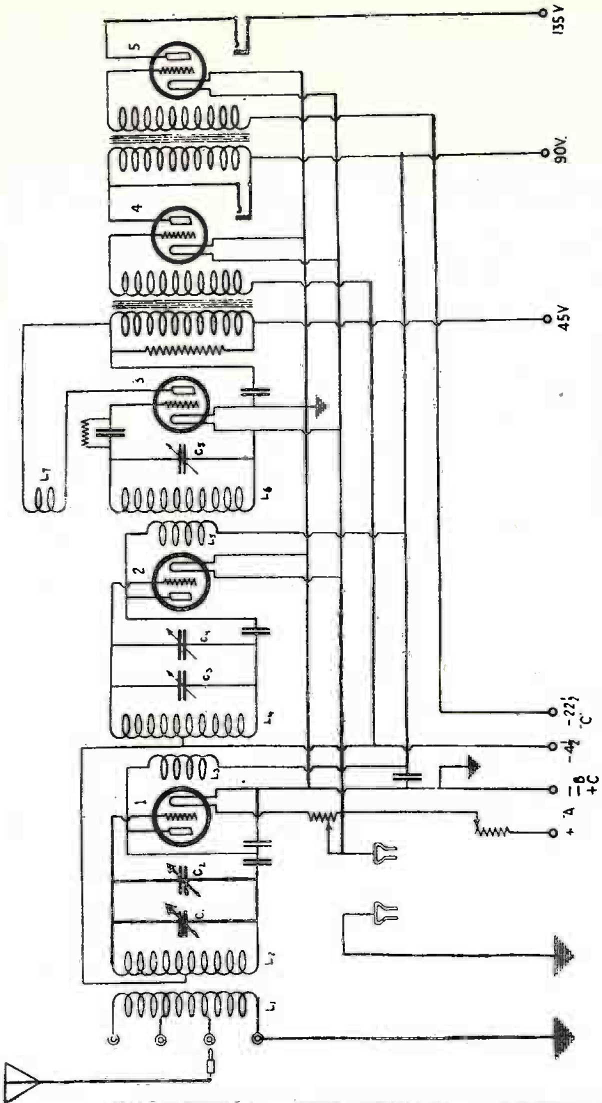

Circuit Diagram of the Radiola 20.

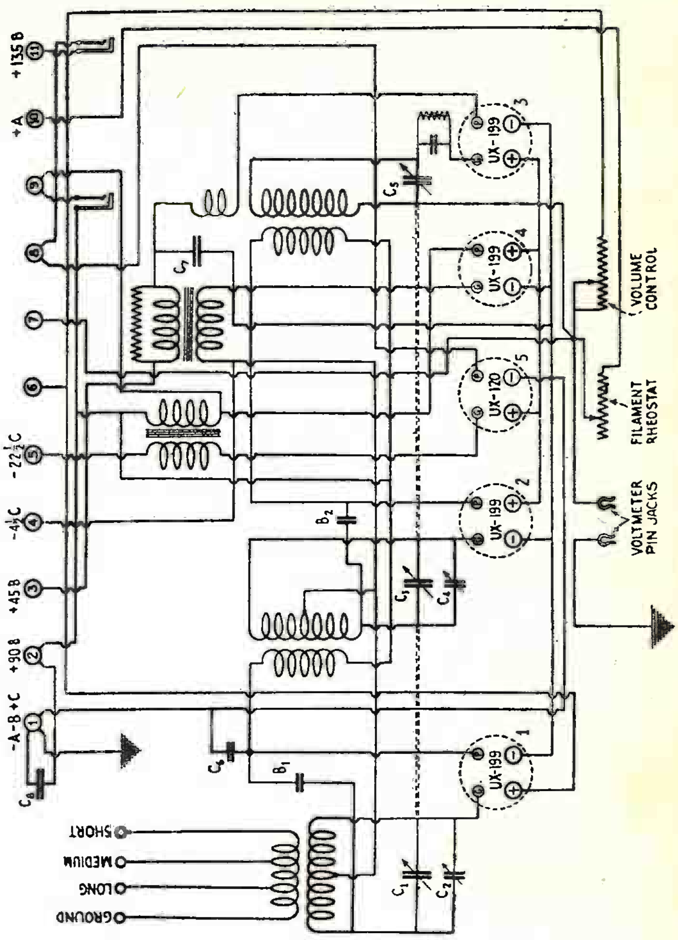

Continuity Diagram of the Radiola 20

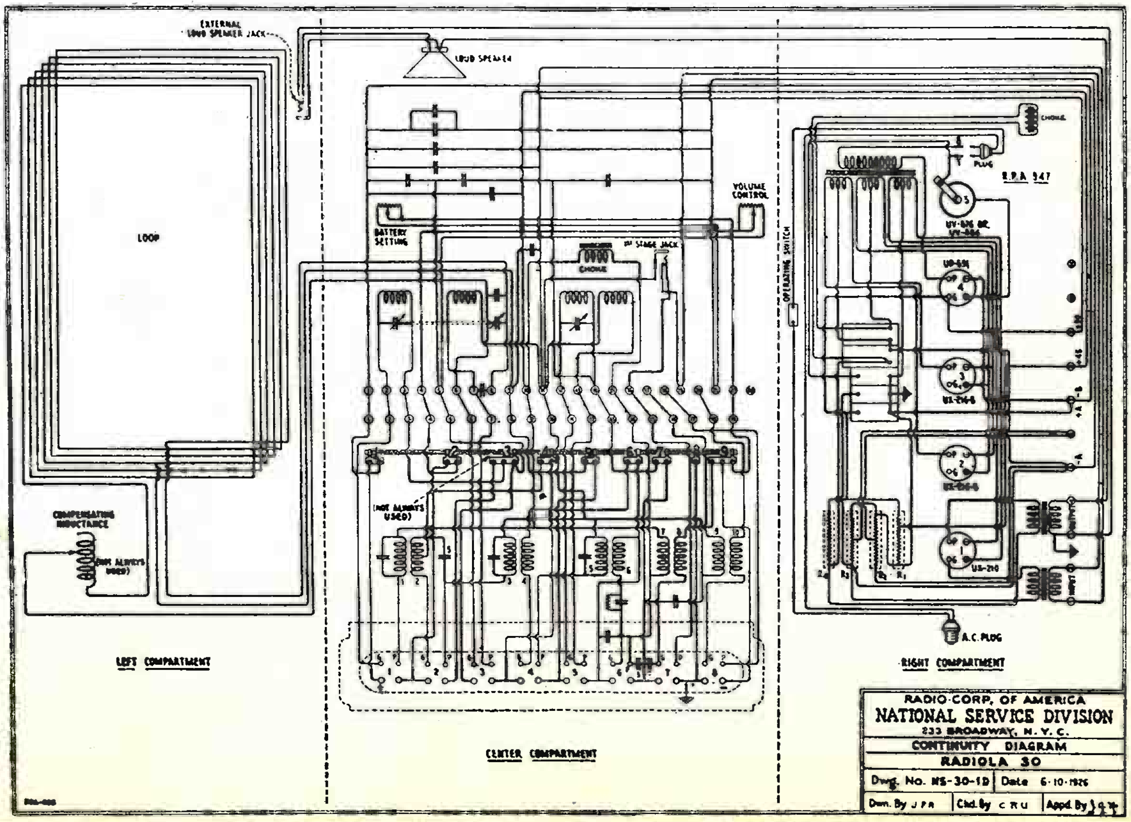

R.C.A.-VICTOR CO.

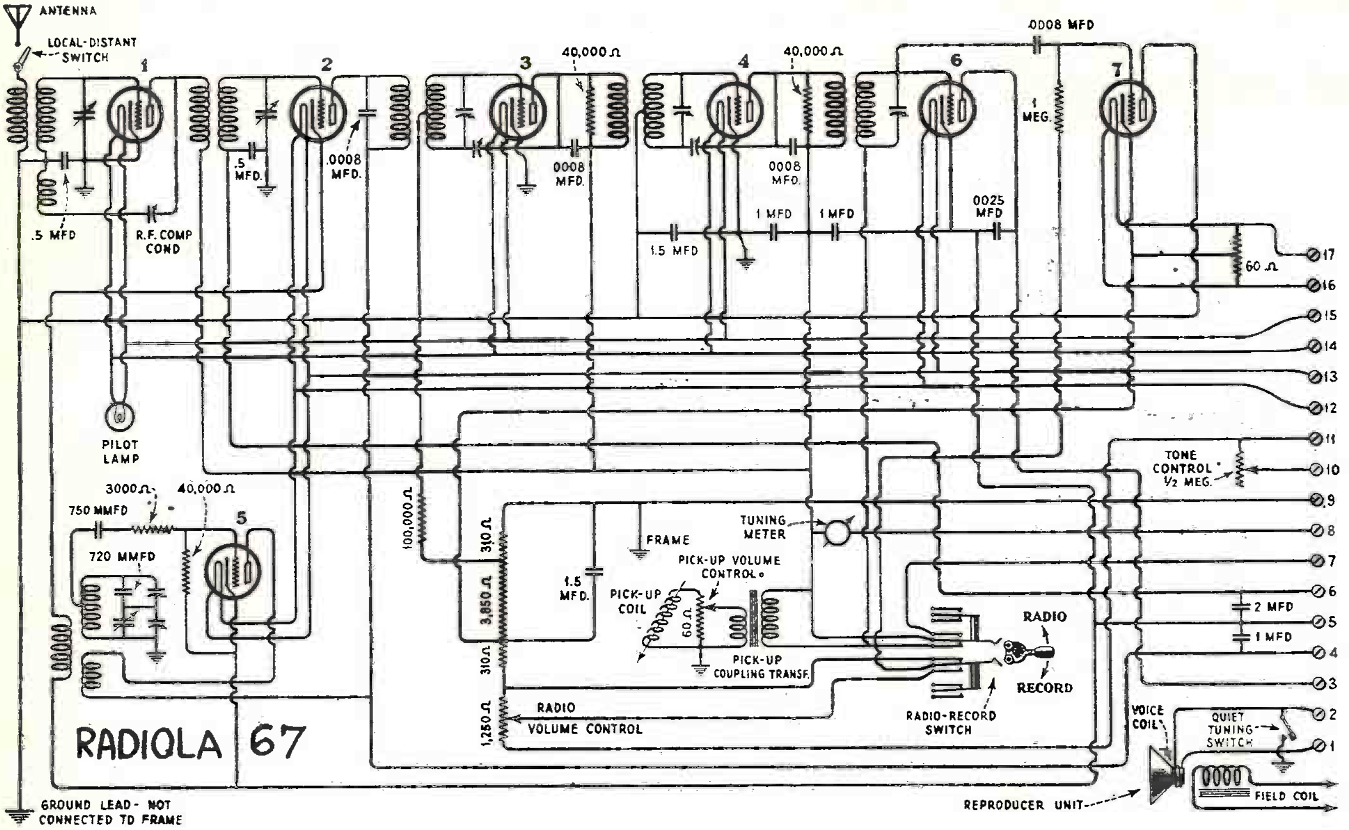

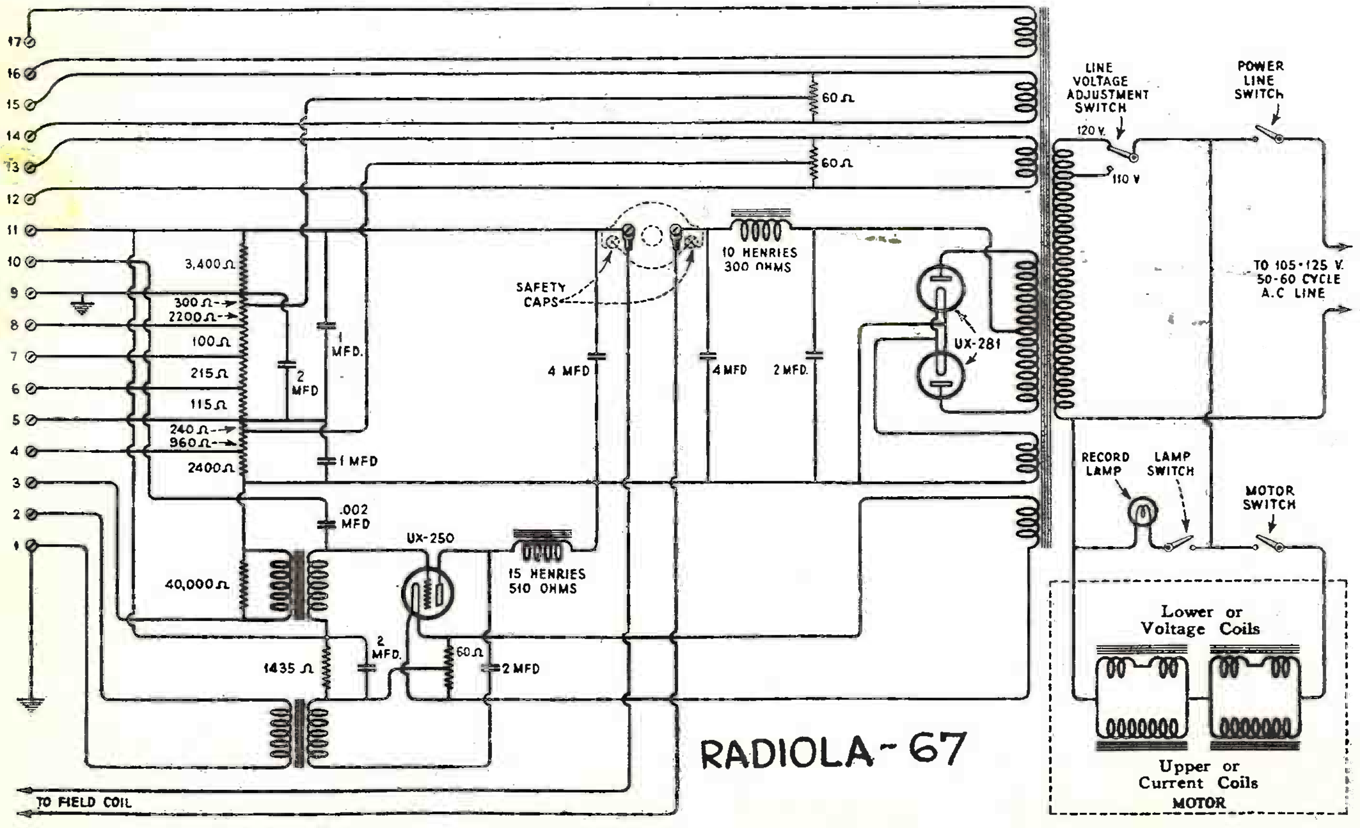

4+3 loop

Radio Service Data Sheet

RADIOLAS "SUPER VIII" (AR-810), "SEMI-PORTABLE" (AR-812), 24 AND 26

These four Radiola superheterodynes use the same 6-tube catacomb, the first of this type put on the market by the Radio Corporation of America; differences lie in the mechanical arrangement of the units outside the catacomb, and in the electrical and artistic design.

The "812," to which most of this material specially applies, is an entirely self-contained semi-portable table cabinet set with a battery compartment at each end. The A.F. output is obtained at a jack; a plug-operated switch changes the circuit from one A.F. to two. Another switch controls the "A" circuit. There is a master rheostat ("Battery Setting"), R3 in the diagram on this page, and also a vernier rheostat ("Volume Control") R2; the latter controls I.F. amplifier V3. A fixed loop antenna is located in the rear of the cabinet. Phones or speaker may be used.

The "AR-810" or "Super VIII" has a highboy cabinet, with a large rotable loop and a loud speaker. The filament circuit is controlled by a door-operated switch instead of SW1, which is replaced on the panel by a knob that controls the loop.

Radiola 24 is a black-leather-covered portable with a built-in loud speaker and a rotable loop that fits into the cabinet when not in use on top.

Radiola 26, the well-known portable so often used for locating interference, is extremely compact, includes a loud speaker and batteries, and has a rotable loop that comprises part of one door. A "home battery box" is used for economical operation at a fixed post. Tip jacks are provided for headphones.

Six UV-'99-type (or UX-'99s with adapters) tubes are required; to use the UX-'20-type tube at V6 an adapter is required (such as the Na-ald "Type 420 Connectorald") which will permit the '20 to assume the horizontal position necessary in order to close the panel, as well as an additional 45-volt "B" battery and a 22½-volt "C" battery.

To prevent repetition of details, reference should be made to Data Sheet No. 16, "Radiola 25 Superheterodyne," April, 1930, issue of RADIO-CRAFT. The same sequence of signals is followed through the catacomb.

Looking at the rear or catwhisker side of the catacomb, and at the terminal strip, V1 is at the left and V6 at the right.

"Station Selector No. 1" is C1, and "Station Selector No. 2" is C2. The rotor side is indicated below by R.

In certain receivers of the Super-VIII model two loud speakers are used; in others, one. The connections, in the "810," are shown in dotted lines. C13 may have a capacity of about .006-mf.

Arrangement of the tube-socket contact springs is shown at the lower left of the schematic, and the correct connections for the oscillator coils directly above. The numbers on the mounting plate correspond with the circuit connections; if one coil is reversed, the set will be made inoperative.

The loop connects to a terminal board on the back of the cabinet. The normal position for "link" is shown in dotted lines; in the second position shown, an external loop may be led to posts 4 and 2, for increased pick-up or more directional reception. A short antenna may be used on post No. 2 or a longer one on No. 1, with either loop in use. A standard "R.F. transformer" designed for .0005-mf. condensers may be used instead of the loop; aerial and ground being connected to the primary, and the secondary leads to posts 4 and 2, with "link" open. This is usually unsatisfactory near strong stations. If the location is particularly shielded, good operation can sometimes be obtained by connecting post No. 1 to ground. Any external connection to this terminal board will change slightly the readings of Selector No. 1. A convenient method of obtaining just the right degree of signal input to the set is to make a coil of magnet wire, any size, about 30 to 50 turns bunched, with a diameter of about six inches, and connect it between aerial and ground; this loop is brought as close to the back of the cabinet as necessary for good coupling.

Absence of signal may be due to open loop or broken pigtail on C1. An open loop may be caused by wires twisting loose from the collector rings. Dirty or loose rings may cause noisy operation. (In later sets of the Super VIII flexible leads supersede the collector ring construction.) A rattling sound in the reproducer may be due to the catacomb springs touching the loop shaft.

Wrong jack-switch circuit change may be due to dirty or bent switch springs, or loose knob.

When working properly, distant stations can be heard in either of two positions of C2; local stations may come in at three or four places. A wave trap or relocation of the set may be necessary.

A cause of trouble may be one of the strands of one of the catwhiskers touching either an adjacent terminal lug or grounding to the can.

Occasionally an "oscillating catacomb" will be found, and the only remedy is to change the catacomb; for no manner of adjusting will stop the oscillations, which cause whistles to be heard on all station settings.

If it is necessary to turn R3 up high, even with new batteries, check the tubes and the "C" battery's polarity. (The "C" is at the rear—inside the loop.)

Any tube in sockets V1, V2 or V3 remaining lighted after switch SW1 has been turned to "off" is an indication that the filament is touching the grid. Tube requirements for V2 seem to be more critical than the others, and tubes subnormal in any way will show up markedly in this position. Rearrange tubes with this in mind. Failure of tubes in the Super VIII to light may be due to failure of switch operated by desk-fall to make contact; bend the spring contacts.

Weak or noisy reception, with C1 tuning considerably below C2, may be due to one or more shorted loop turns; inspect loop carefully. Noisy reception may be due to dirty socket springs; clean only with sandpaper and pull up springs. To do this without removing batteries or all tubes necessitates an insulated tool to prevent short circuits. The loop of the Semi-Portable is easily removed for inspection after catacomb, battery cable, by-pass condenser, "C," catch, and handle are out.

Using phones or a meter with a 4½-volt "C" battery, the following table may be used for making continuity tests on the catacomb of Radiola 24, AR-810 and AR-812, without removing it, when the battery cable is disconnected; and tubes are removed:

From	*To*	*Test*
1	V1 grid	Open
4	V2 plate	Closed
5	V2 grid	Closed
6	V1 plate	Open
6	V1 grid	Closed
6	V3 grid	Closed
6	V5 grid	*Closed
6	V6 grid	*Closed
7	V3 F—	Closed
8	V1, V2, V4, V5, V6 F—	Closed
10	V4 plate	Open
10	Catacomb can	Closed
10	All F+	Closed
10	V4 grid	Open
11	V4 plate	Closed
12	Terminal 3	Closed
12	V1 plate	Closed
12	V3 plate	Closed
12	Terminal 14	Closed
13	V5 plate	Closed
15	V6 plate	Closed

---

* *With headphones, a weak click should be heard.*

The figures in the left column refer to the connection lugs on the terminal strip, to which the whiskers of the catacomb are connected; counting from left to right, and looking at the catacomb from the rear.

Catwhisker No. 2 does not appear on the catacomb; and terminal lug No. 2 is not used. Terminal connection No. 9 does not connect to the catacomb, nor No. 16; their connections to parts outside are shown.

To replace C12, a fixed .0001-mf. unit will usually serve. The value of C10 is .006-mf. C11 (rear of cabinet) may be replaced with a 1.0 or 2-mf. unit.

The catacomb of Radiola 26 is mounted differently, and the connections thereto are reversed. As a stage-change switch is not used, the built-in loud speaker is at all times connected to the second audio stage, and the phone-tip pin jacks to the first stage.

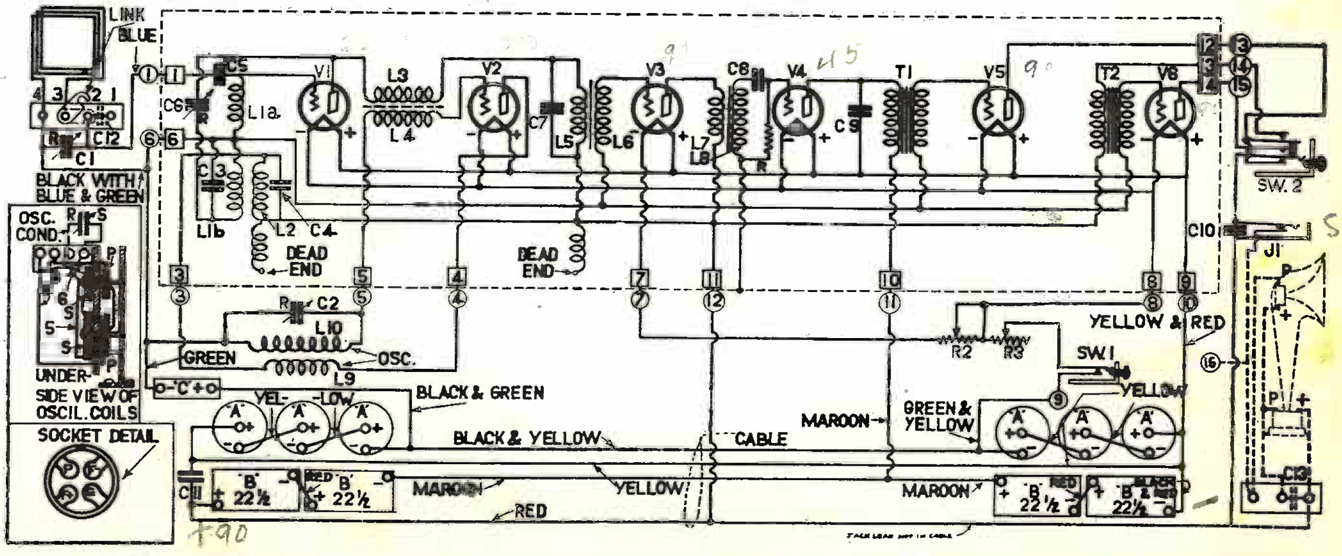

Above "Socket Detail" at lower lower left, the oscillator coils, their terminal strip, and C2; upper left, loop connections; lower right, "Super VIII" speaker connections. All "F+" leads (9-10) ground to can. Lead to center spring of J1 jumps over lower (sleeve), or "B+" contact. C6, within "cat.," comes adjusted for average '99s. Numbers in squares refer to catwhiskers; in circles, to terminal lugs. Loop has 14 turns of No. 18 wire, spaced 3/16-in., on a frame 9" x 18½". Batteries are in position for the "812."

Radio Service Data Sheet

RADIOLA 25 SUPERHETERODYNE

This circuit is one of the variations of the "Second-Harmonic" Radiola Superheterodyne in which the first tube is reflexed for the first stage of intermediate-frequency amplification. The "sequence" of signals in this circuit is as follows: V1 may be considered as both the first stage of R.F. amplification at the broadcast wavelengths, and the first stage of intermediate frequency amplification at 45 Kc.; V2 is the oscillator and first detector; V3 is the second intermediate-frequency amplifier; V4 is the second detector; V5 is first A.F.; and V6 is second A.F. The desired signals are selected by the loop and C1. Since L1A has a high impedance to the broadcast frequencies, the signal, having passed through C5, is amplified by V1 and the output fed to the grid of oscillator V2 through the aperiodic R.F. transformer L3-L4. (The grid circuit of V2 is tuned by L10-C2.) (To prevent circuit oscillation in V1, neutralization has been effected through the use of L1B-C3-C6. C6 is contained inside the catacomb and adjustment of this unit is made at the factory.) The intermediate-frequency component in the plate circuit of V2 is coupled by L2 to L1A and then amplified by V1. The amplified output of V1 at this frequency is coupled by L5-L6 to the second I.F. amplifier V3; and then, after amplification, by L7-L8 to the second detector V4. The A.F. output of this tube is amplified by V5 and V6 in the usual manner.

The units that comprise the "catacomb" are contained within a metal can, represented in the diagram as a dotted outline, and sealed with resin.

L9-L10 are mounted on a bakelite plate under C2. L10 is the upper and L9 is the lower coil (see detail at extreme left); while 5 and 4 are the outside leads, connected as shown in the schematic circuit.

A continuity test of L1A is completed by touching the brass stator-tube of C6; which is accomplished by gently prodding through the small hole, in the top plate, between the sockets for V1 and V2 ("CT," in the diagram).

If one of the two connected phosphor-bronze contact springs in the loop socket breaks, the unused spring (see X in detail at extreme left of diagram) may be used as a replacement. These springs drop into the receptacle and lock into position; they are removed by pushing a small screwdriver into the holes in the side of the bakelite receptacle. If the contact springs on the end of the loop become flattened because of misuse, they may be sprung out again by using a screwdriver placed underneath (this must be done very carefully, else the insulating shell will be split by the excessive pressure).

If the loop is so jarred as to lose its upright position, it may be re-located by loosening the four machine screws that lock the socket-collar in position, moving it around until the loop is again vertical, and then tightening the screws.

Since both sides of the loop are at a different potential from the "A" battery, a "dead" "C" battery may be an indication that one side of the loop circuit has become grounded; the loop may ground if it is carelessly inserted into the receptacle.

V7 is a protective lamp (No. UV-877). It is a double-filament bulb of the "double-contact" bayonet-base type; either or both filaments light or burn out if a short-circuit occurs. In some models of the "25" this lamp and its 1.0-mf. by-pass condenser C13 have been eliminated. If a replacement lamp is not available, temporary operation may be obtained by twisting together its three leads 1 (not numbered), 2 and 3.

Upon removing from the cabinet the chassis and looking at its rear, there will be seen a bakelite connection strip containing 20 connecting lugs; the loop connects to No. 1 at the extreme left, while No. 20 at the extreme right is not connected to anything. Seventeen black wires are seen to leave the catacomb and connect to the lugs shown in the schematic circuit as numbers within circles. By rocking the catacomb on its spring-cradle it will be possible to discern figures, stamped on a bakelite plate underneath the top of the "cat," numbering from 1, at left, to 17 (right) which appear in the diagram as numbers within squares. These stranded leads may short, in a few instances, between two connecting lugs; or between a lug and the case of the "cat." which is grounded to "A+"; or, they may break.

Also at the rear of the "cat." is a connection-panel called a "bus bar" which wires the filaments either in parallel (as shown in the circuit) or in series, when the connection-panel is the special one included in the "A.C. package" required for A.C. operation of this set. Unlighted tubes or noisy operation may be due to loose screws holding and connecting this D.C. bus bar to the specially-provided filament connections of the tube sockets.

Looking at the front of the set, the loop-tuning condenser C1 is at the left; the oscillator-condenser C2 at the right. Noisy or no reception may be due to the rotor pigtail of C1 or C2 touching the stator.

As will be noted from consideration of the diagram, the output of the detector may be connected to an external power amplifier through tap 19; or this tap may be connected to a phonograph pick-up to utilize the A.F. amplifier alone.

Looking at the "cat." from the front, and counting from right to left, tubes 1 to 5 are type '99 tubes marked V1 to V5 in the diagram; V6 (the left and sixth tube), is a type '20. If a single tube is much below par, it is necessary to overload the remaining tubes to bring reception up to standard, and then the tubes deteriorate rapidly; whereas normal life may well be a year and over. The filament potential should never exceed 3.3 volts, and to determine accurately when this voltage has been obtained, a good voltmeter should be connected to the two tip jacks provided on the front vertical panel, just above the filament switch, and shown in the schematic diagram as tip jacks 1 and 2. R3 is the left and master control ("Battery Setting") of these filament potentials; while R2 (right, or "Volume Control") still further reduces the voltage applied to V3.

Batteries of the correct size for the compartments of this set are as follows: C1, Burgess No. 5156BP or Eveready No. 768; C2, Burgess No. 2370 or Eveready No. 771; A3, 6 Burgess No. 6 or Eveready No. 7111 dry cells; B4, 2 45-volt Burgess No. 10308 or Eveready No. 770; B5, 2 22½-volt Burgess No. 2156 (or 2158) or Eveready No. 779.

By plugging into the socket of V5 or V6 a dummy tube base, to the grid-prong of which is soldered a lead wire, it is possible to couple through T1 or T2 the output of V4 or V5 to an external power amplifier of any type, such as push-pull '45s.

The fixed condensers shown in the schematic circuit are, except for C13, within the "cat." non-replaceable, and have values which are not available here.

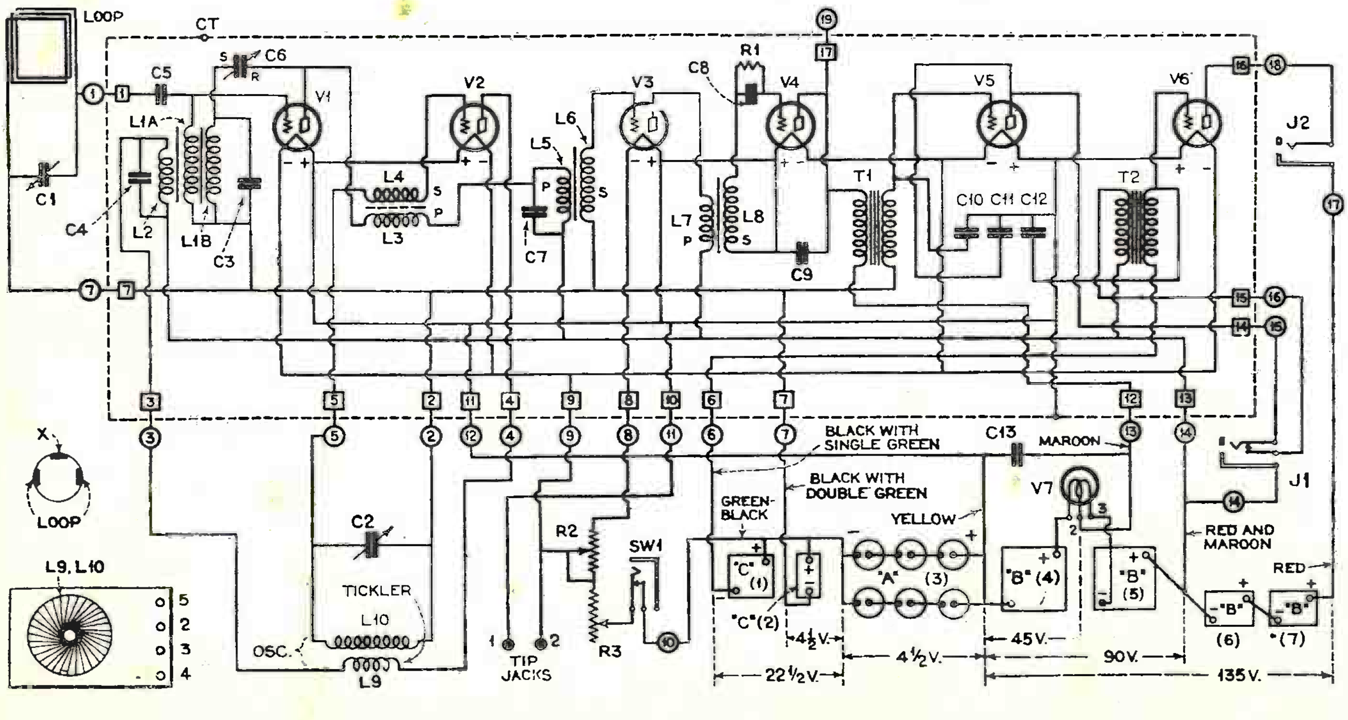

R.C.A.-VICTOR CO.

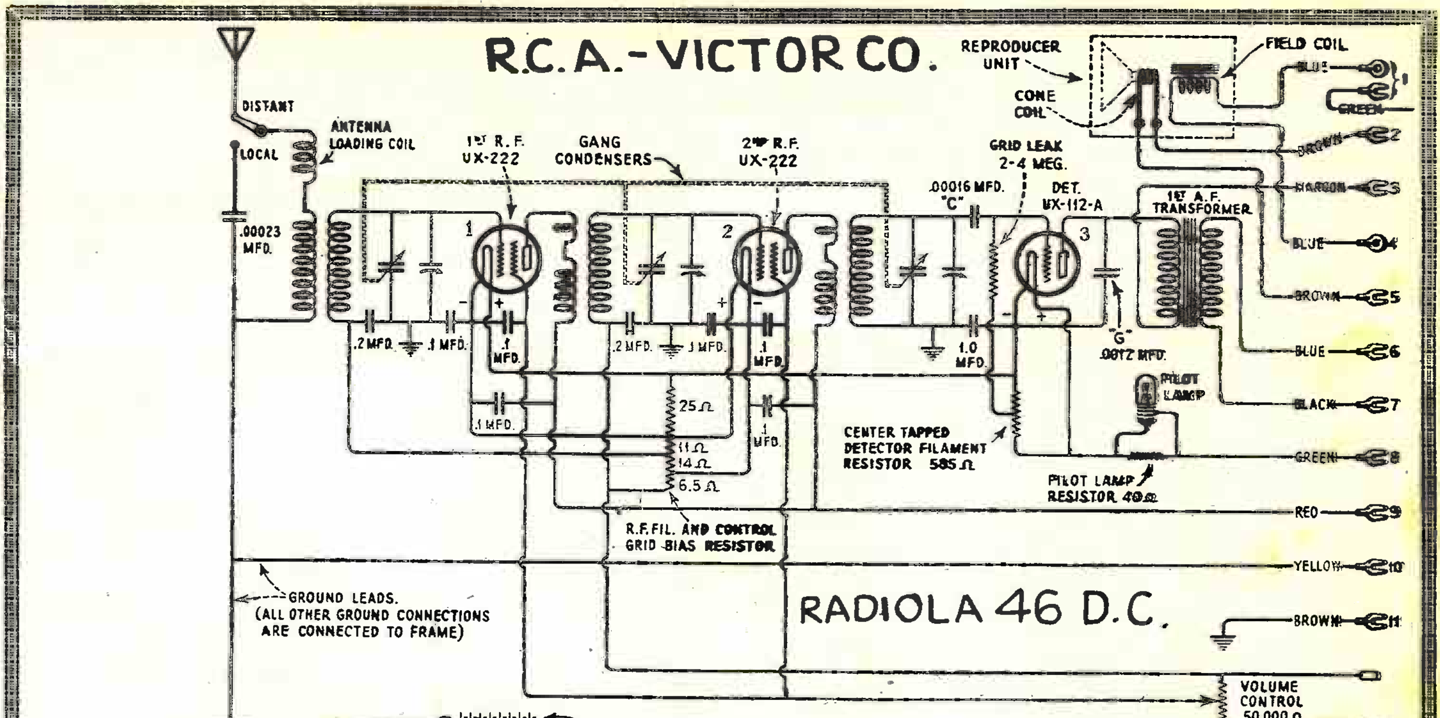
RADIOLA 46 D.C.

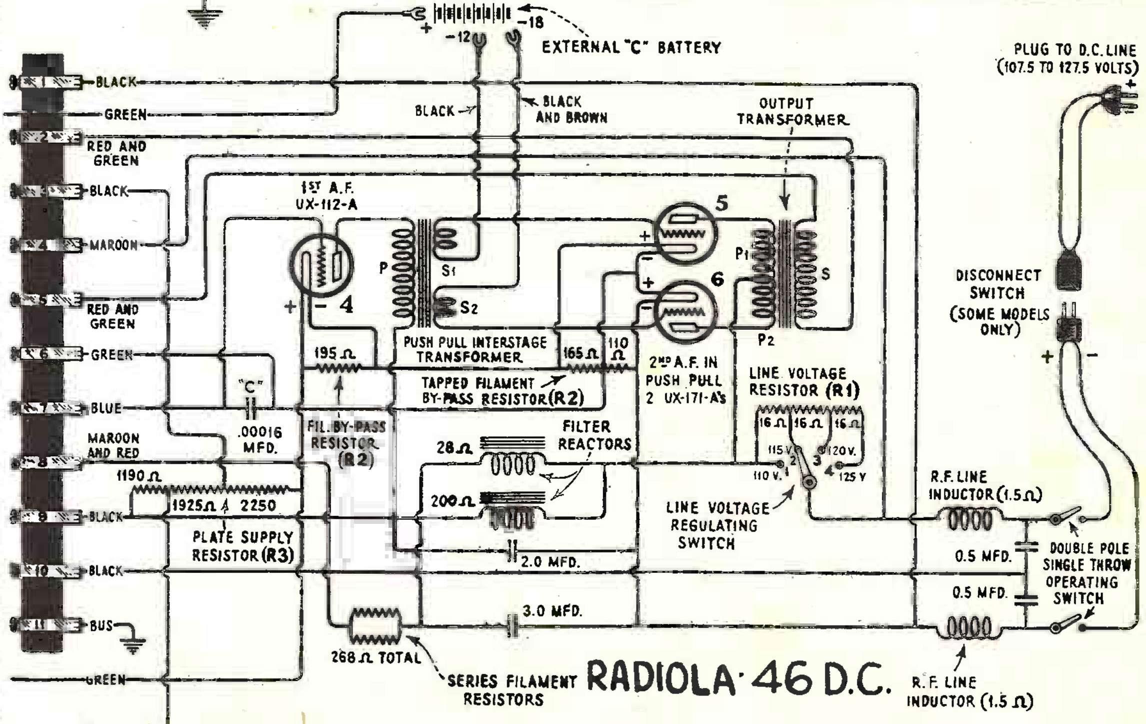
RADIOLA 46 D.C.

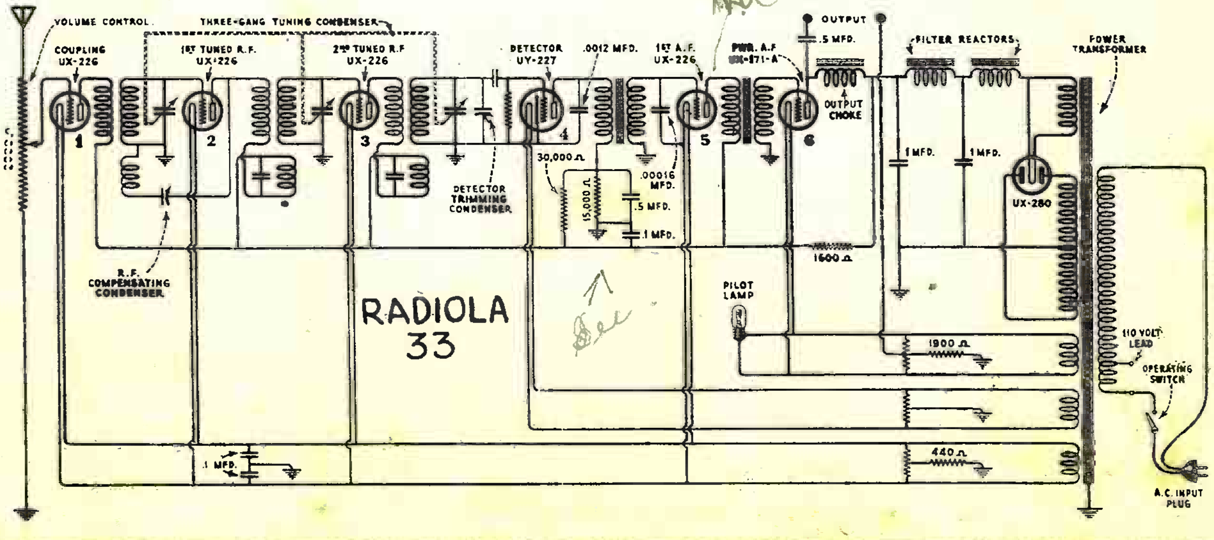
RADIOLA 33

Note

See

R.C.A.-VICTOR CO.

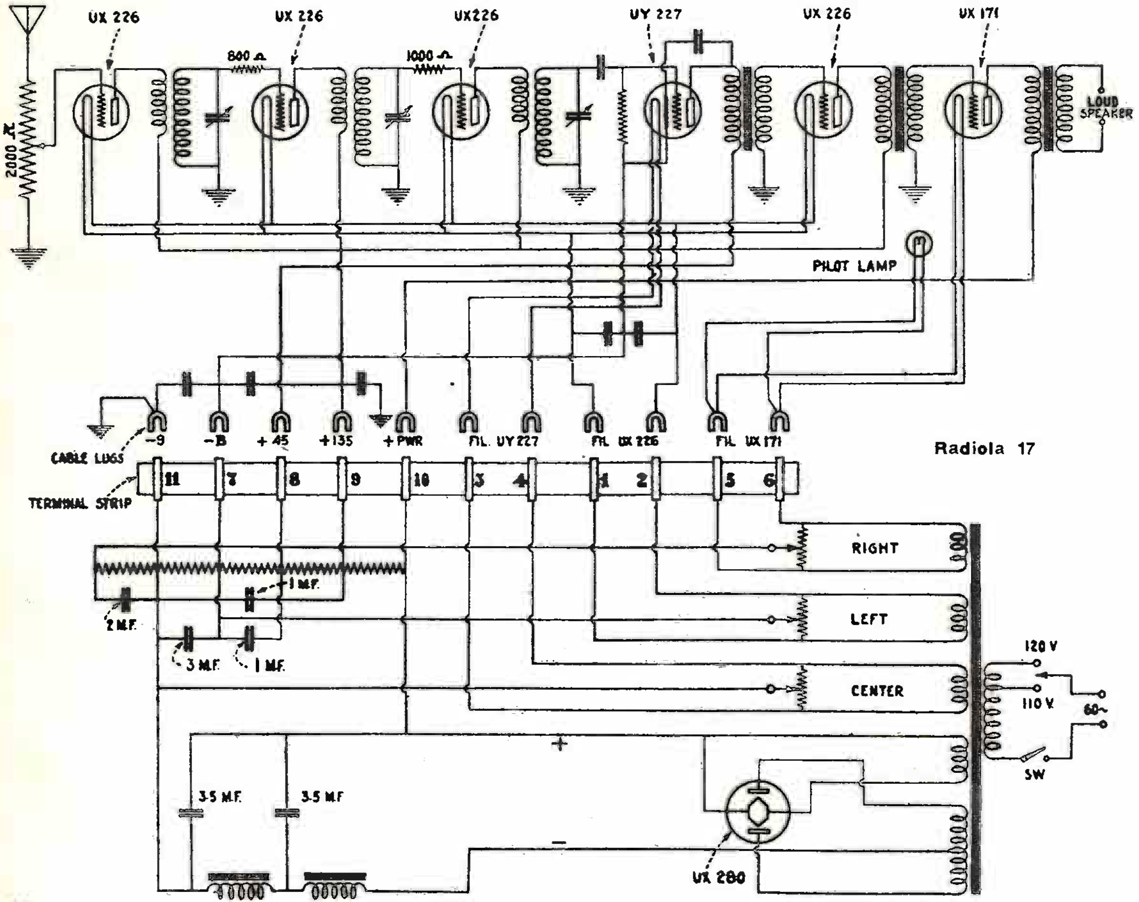

Radiola 17

(Below) Schematic Circuit Diagram of Radiola 60 and Socket Power Unit

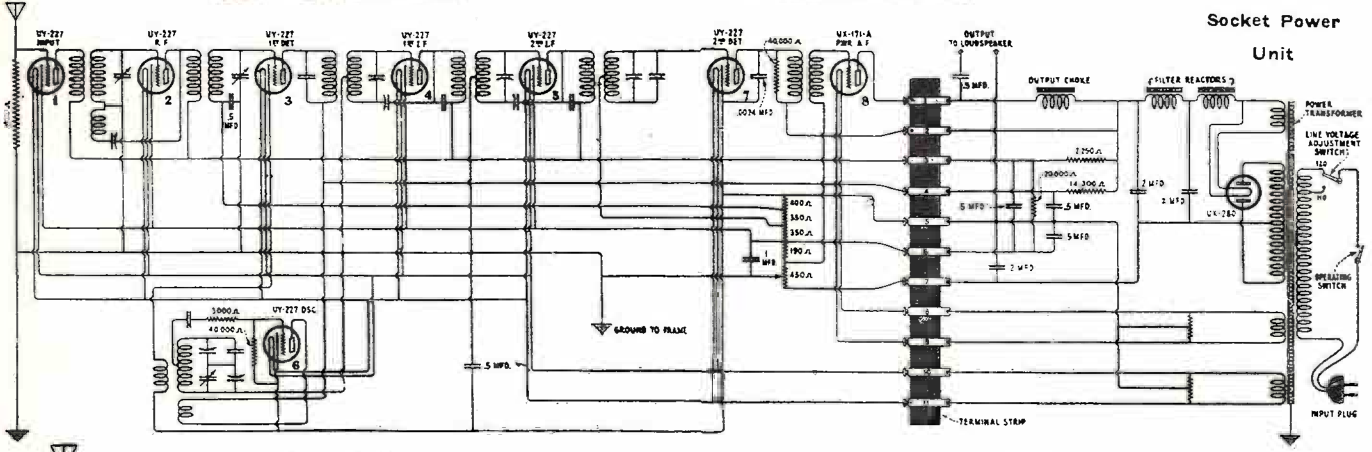

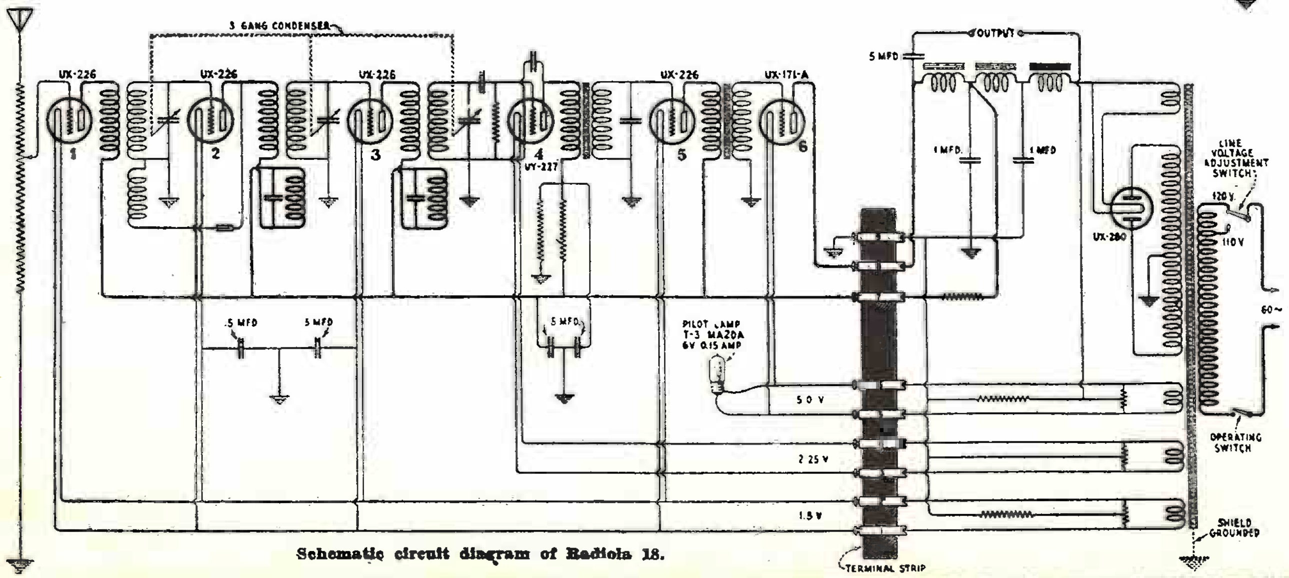

Schematic circuit diagram of Radiola 18.

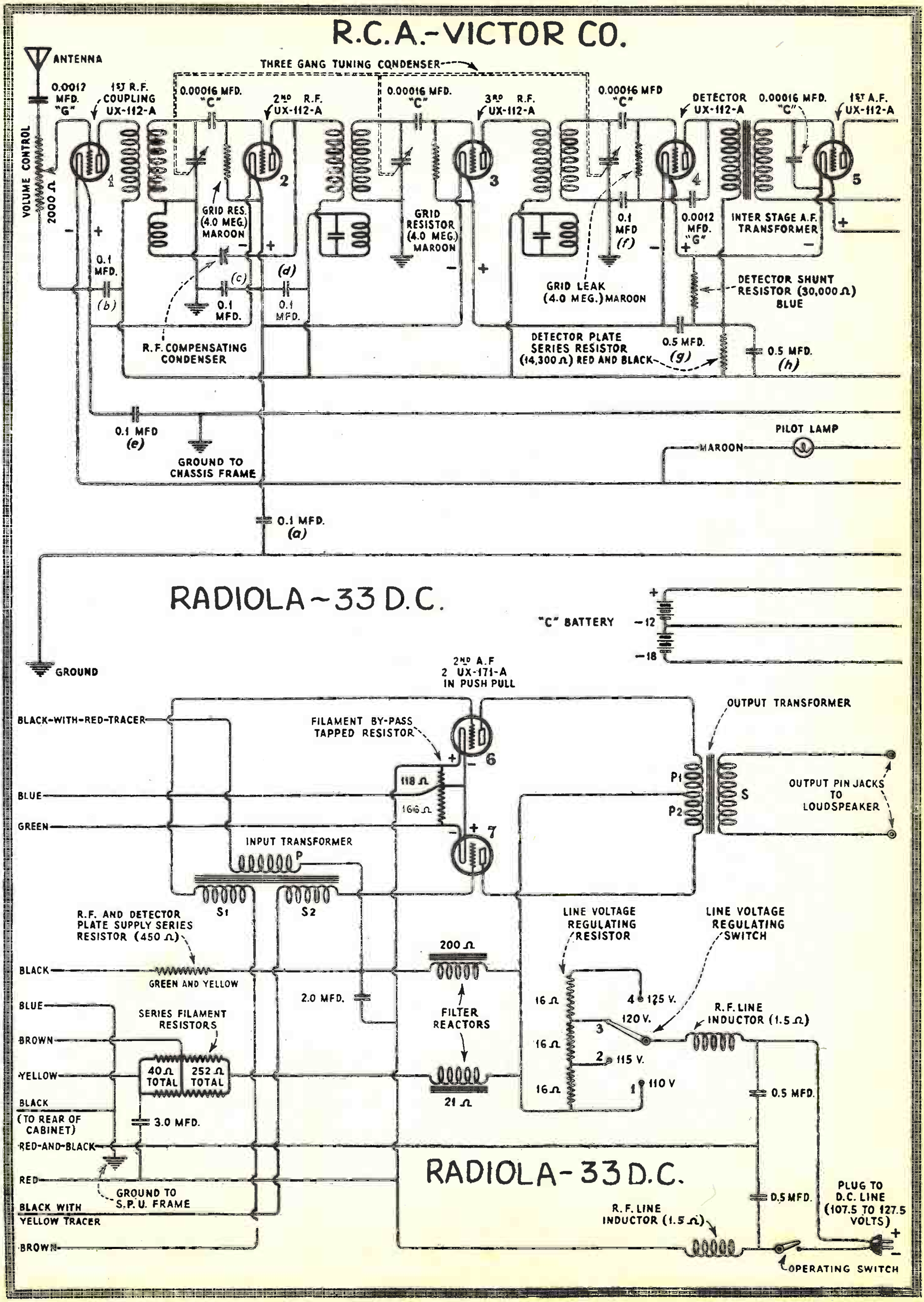
R.C.A.-VICTOR CO.
ANTENNA
THREE GANG TUNING CONDENSER
0.0012 MFD. "G"
1ST R.F. COUPLING UX-112-A
0.00016 MFD. "C"
2ND R.F. UX-112-A
0.00016 MFD. "C"
3RD R.F. UX-112-A
0.00016 MFD "C"
DETECTOR UX-112-A
0.00016 MFD. "C"
1ST A.F. UX-112-A
VOLUME CONTROL
2000 Ω
1
2
3
4
5
GRID RES. (4.0 MEG.) MAROON
GRID RESISTOR (4.0 MEG.) MAROON
0.1 MFD (f)
0.0012 MFD. "G"
INTER STAGE A.F. TRANSFORMER
0.1 MFD. (b)
0.1 MFD.
(c)
(d)
0.1 MFD.
GRID LEAK (4.0 MEG.) MAROON
DETECTOR SHUNT RESISTOR (30,000 Ω) BLUE
R.F. COMPENSATING CONDENSER
DETECTOR PLATE SERIES RESISTOR (14,300 Ω) RED AND BLACK
0.5 MFD. (g)
0.5 MFD. (h)
0.1 MFD (e)
GROUND TO CHASSIS FRAME
PILOT LAMP
MAROON
0.1 MFD. (a)
RADIOLA-33 D.C.
"C" BATTERY
+
-12
-18
GROUND
2ND A.F 2 UX-171-A IN PUSH PULL
BLACK-WITH-RED-TRACER
FILAMENT BY-PASS TAPPED RESISTOR
118 Ω
166 Ω
6
7
OUTPUT TRANSFORMER
P1
P2
S
OUTPUT PIN JACKS TO LOUDSPEAKER
BLUE
GREEN
INPUT TRANSFORMER
P
S1
S2
R.F. AND DETECTOR PLATE SUPPLY SERIES RESISTOR (450 Ω)
BLACK
GREEN AND YELLOW
200 Ω
2.0 MFD.
FILTER REACTORS
21 Ω
LINE VOLTAGE REGULATING RESISTOR
LINE VOLTAGE REGULATING SWITCH
16 Ω
16 Ω
16 Ω
4 125 V.
3 120 V.
2 115 V.
1 110 V
R.F. LINE INDUCTOR (1.5 Ω)
0.5 MFD.
BLUE
BROWN
SERIES FILAMENT RESISTORS
YELLOW
40 Ω TOTAL
252 Ω TOTAL
BLACK (TO REAR OF CABINET)
3.0 MFD.
RED-AND-BLACK
RED
GROUND TO S.P.U. FRAME
BLACK WITH YELLOW TRACER
BROWN
RADIOLA-33 D.C.
R.F. LINE INDUCTOR (1.5 Ω)
0.5 MFD.
PLUG TO D.C. LINE (107.5 TO 127.5 VOLTS)
+
-
OPERATING SWITCH

R.C.A.-VICTOR CO.

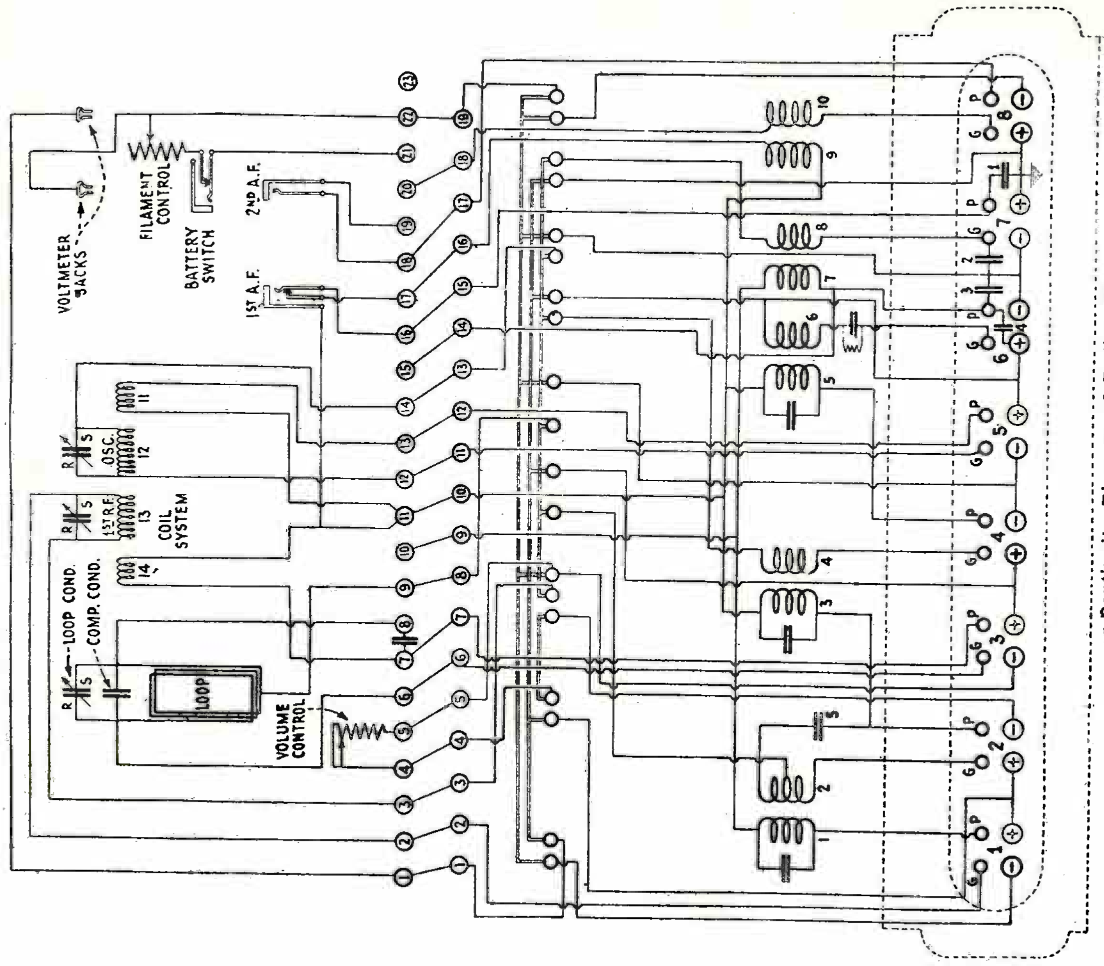

Continuity Diagram of Radiola 28

LOUD SPK'R. 104 RPA UNIT.

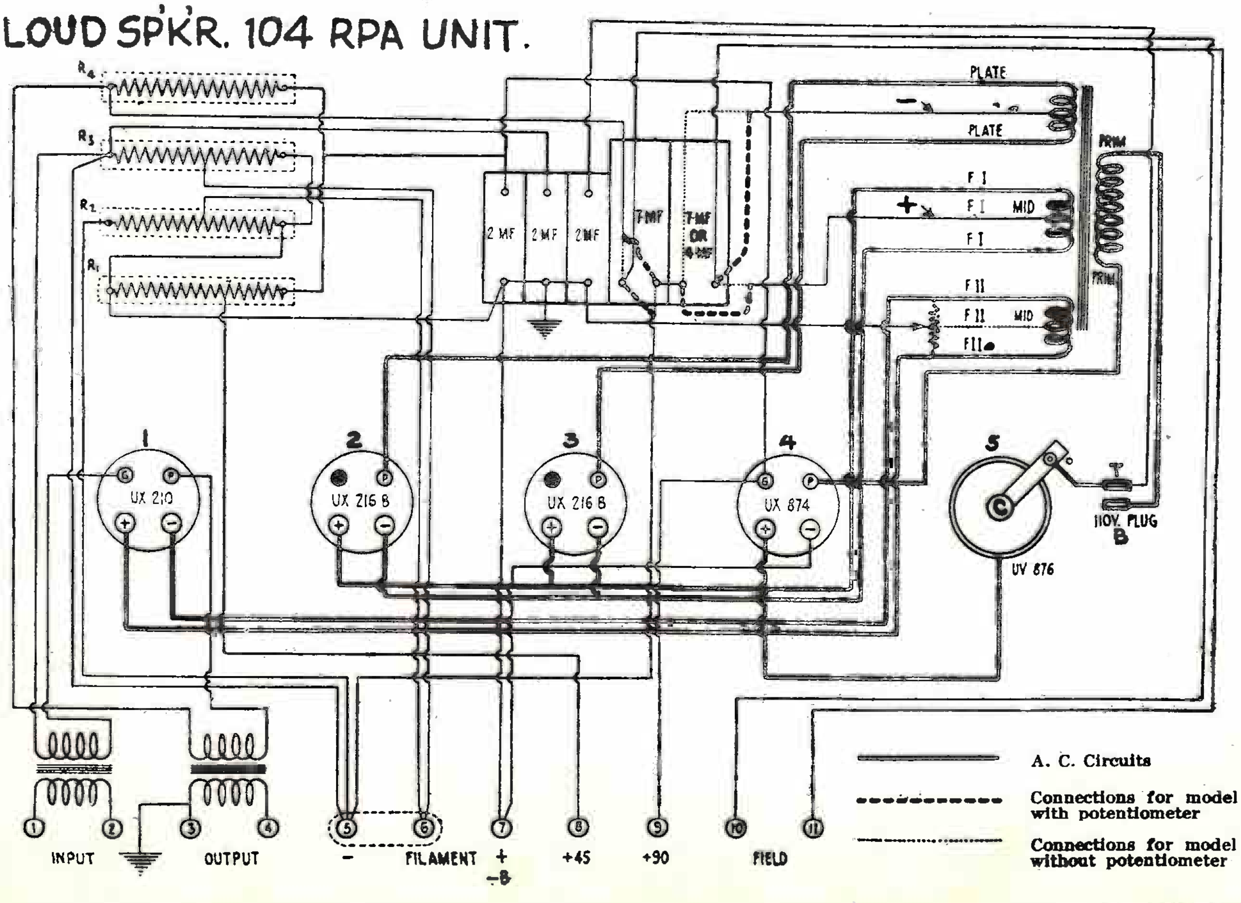

R.C.A.:VICTOR CO.

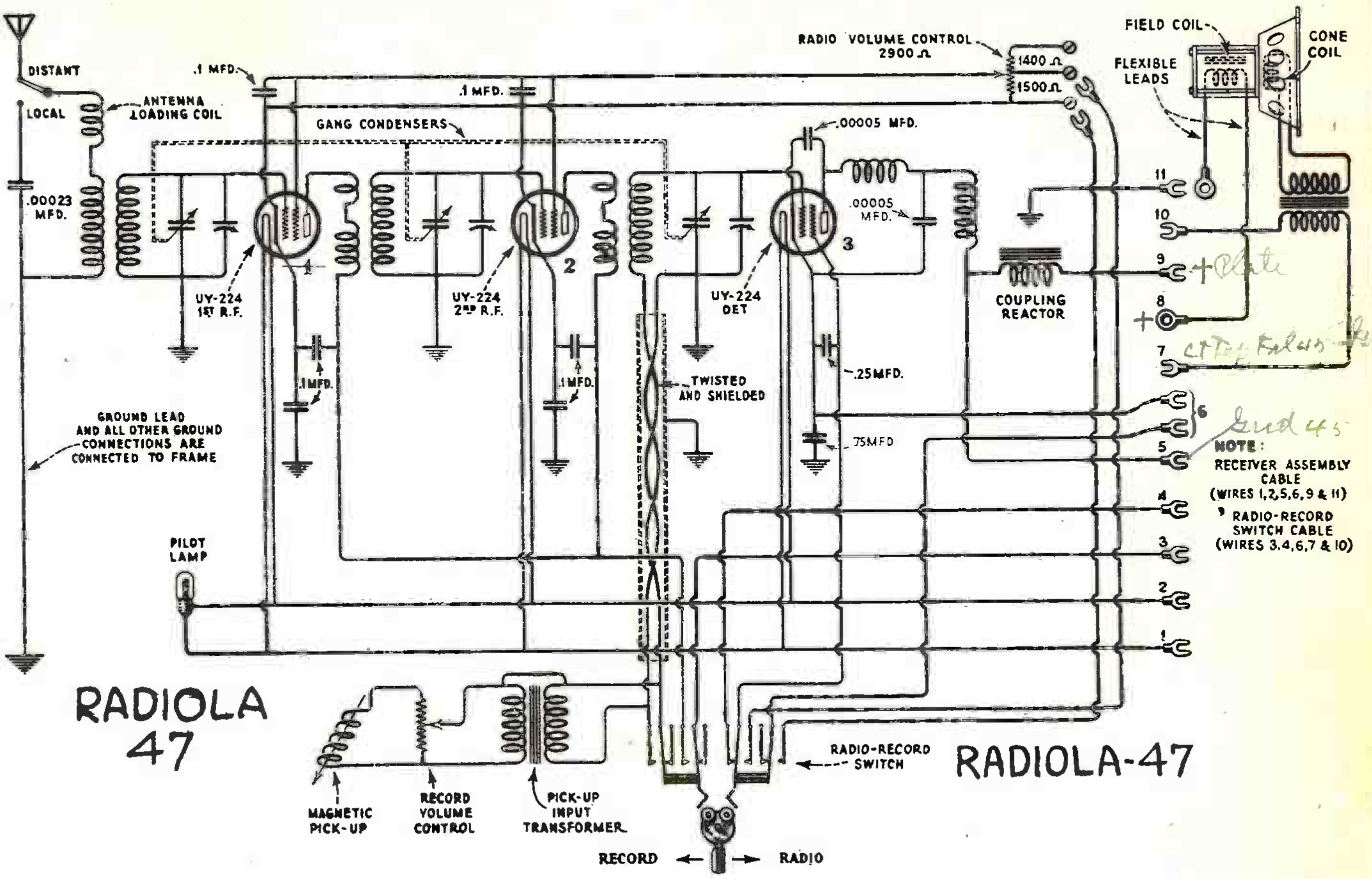

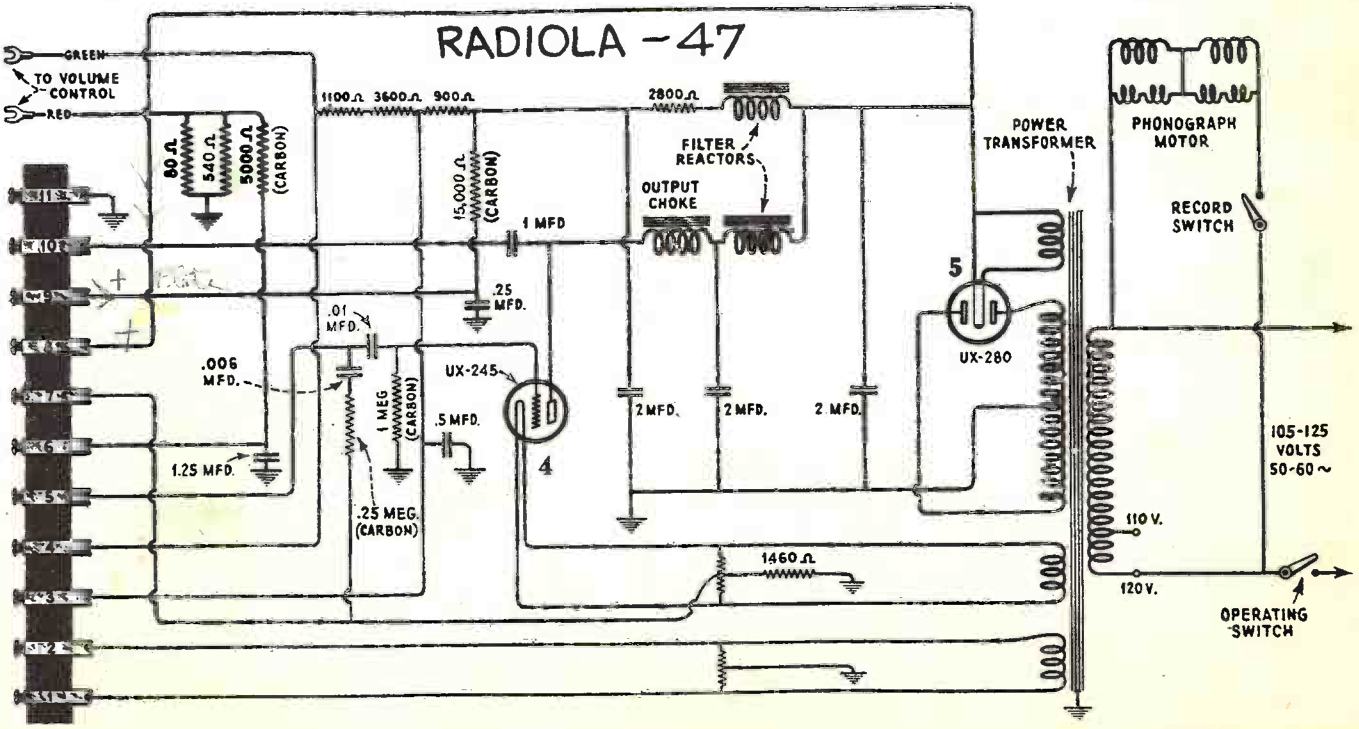

R.C.A.-VICTOR CO.

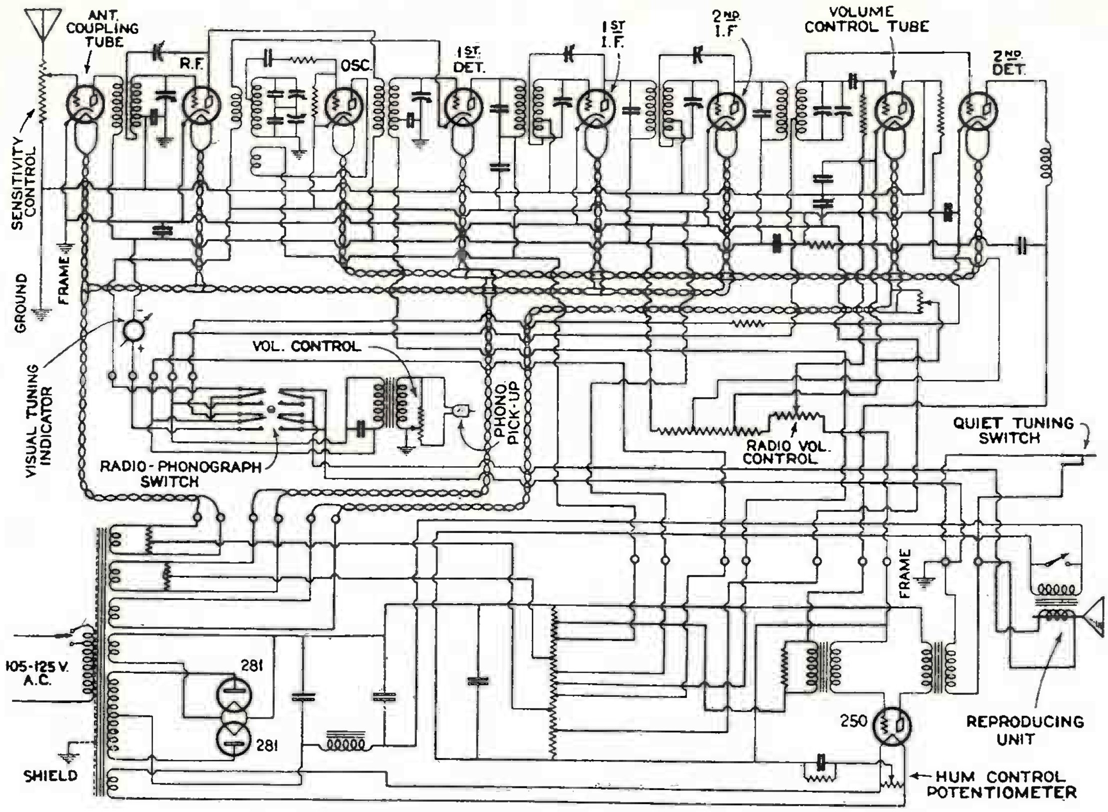

Schematic diagram of the Radiola 64. A. C. Super-Heterodyne Receiver.

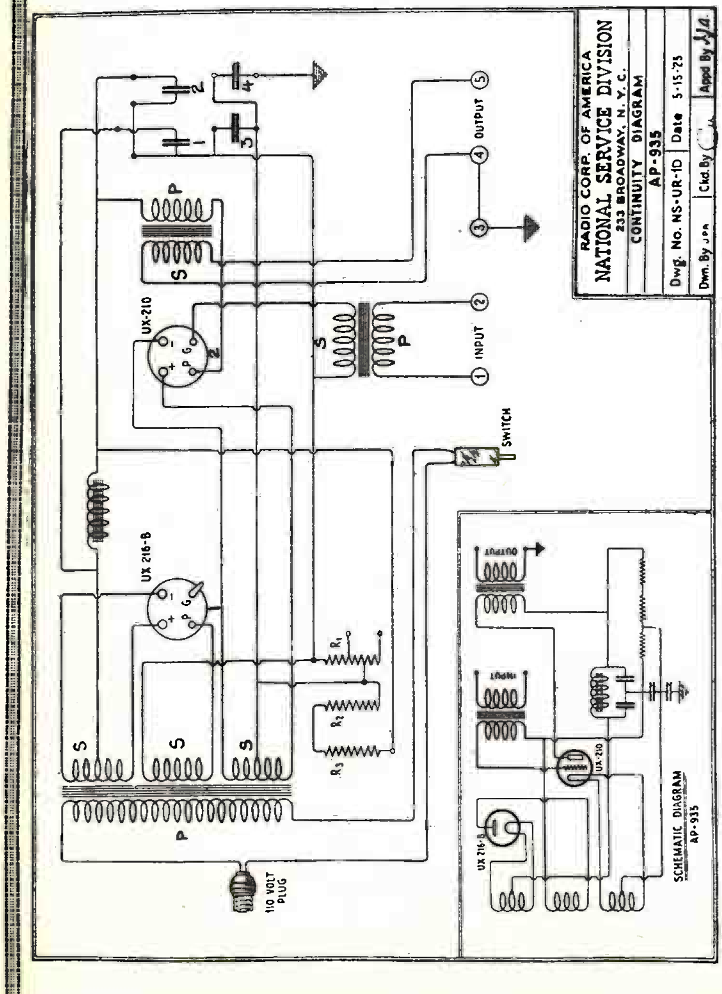

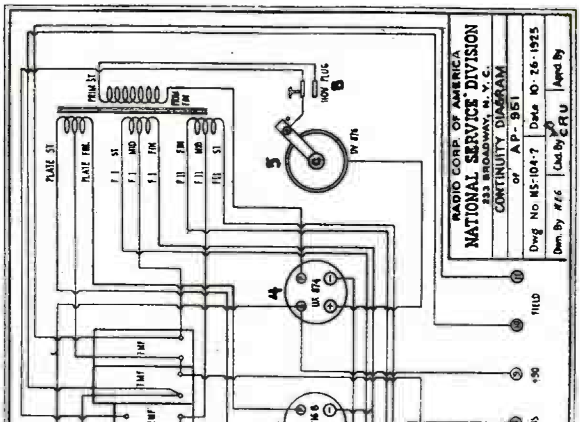

R.C.A.- VICTOR CO.

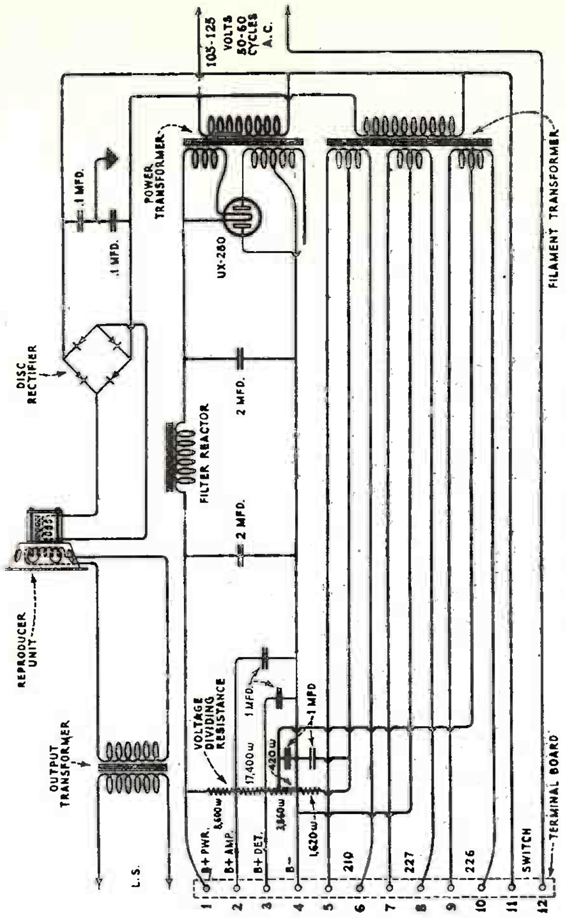

Schematic circuit diagram of Sterling S. P. U.

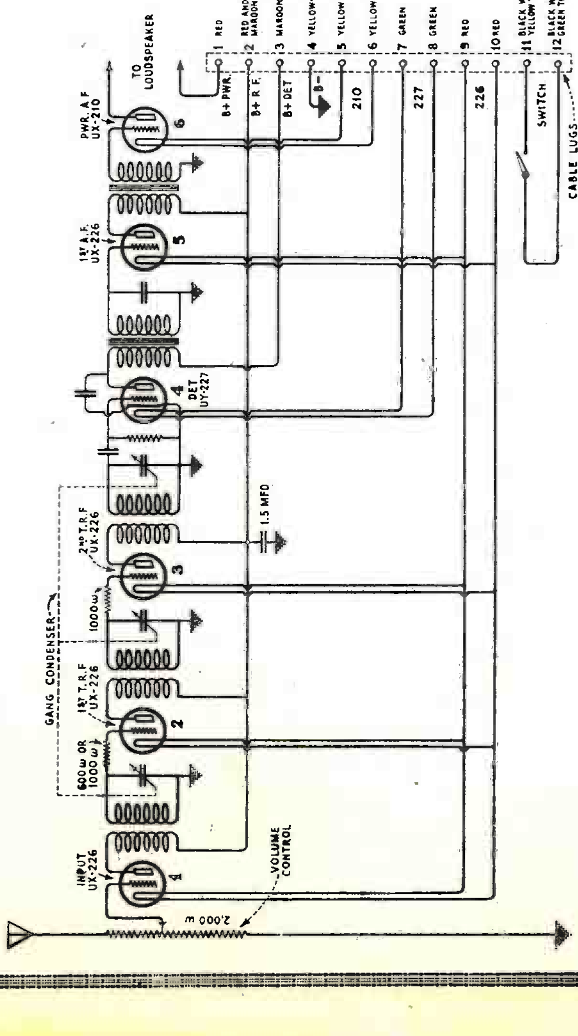

Schematic circuit diagram of the receiver assembly in Radiola 41

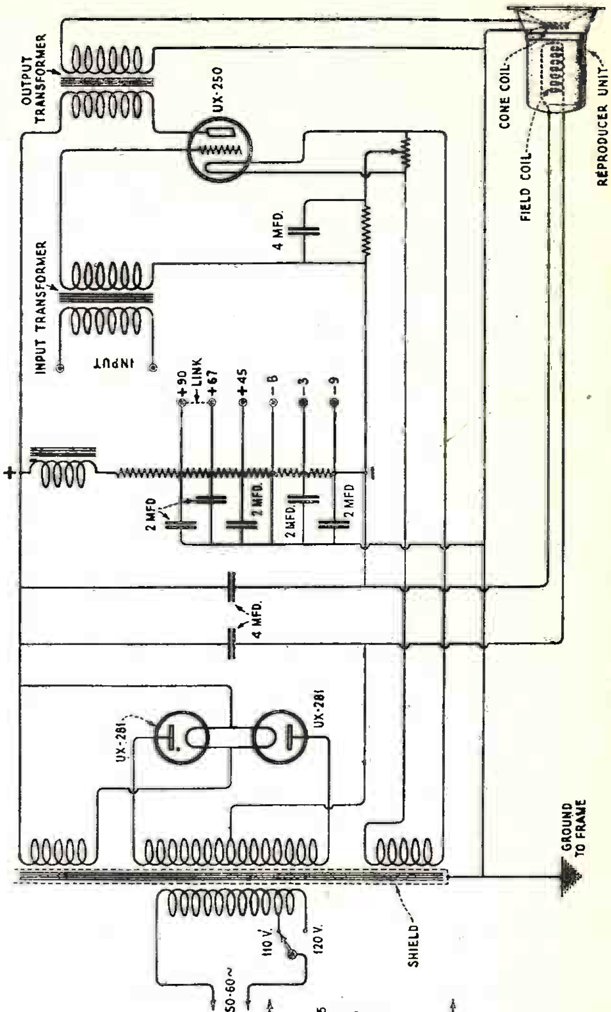

Schematic circuit diagram of RCA Loudspeaker 105.

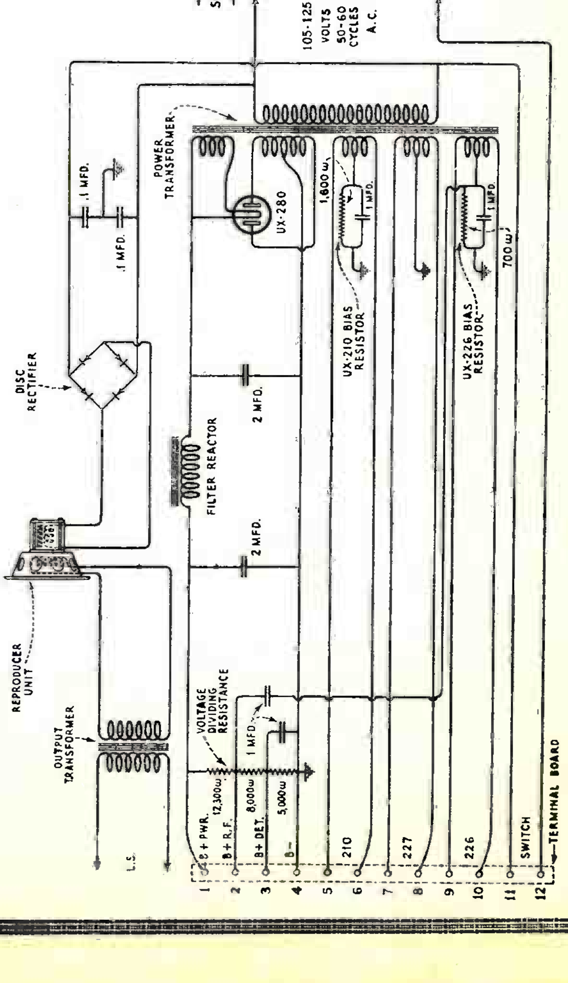

Schematic circuit diagram of Receptor S. P. U.

R.C.A.-VICTOR CO.

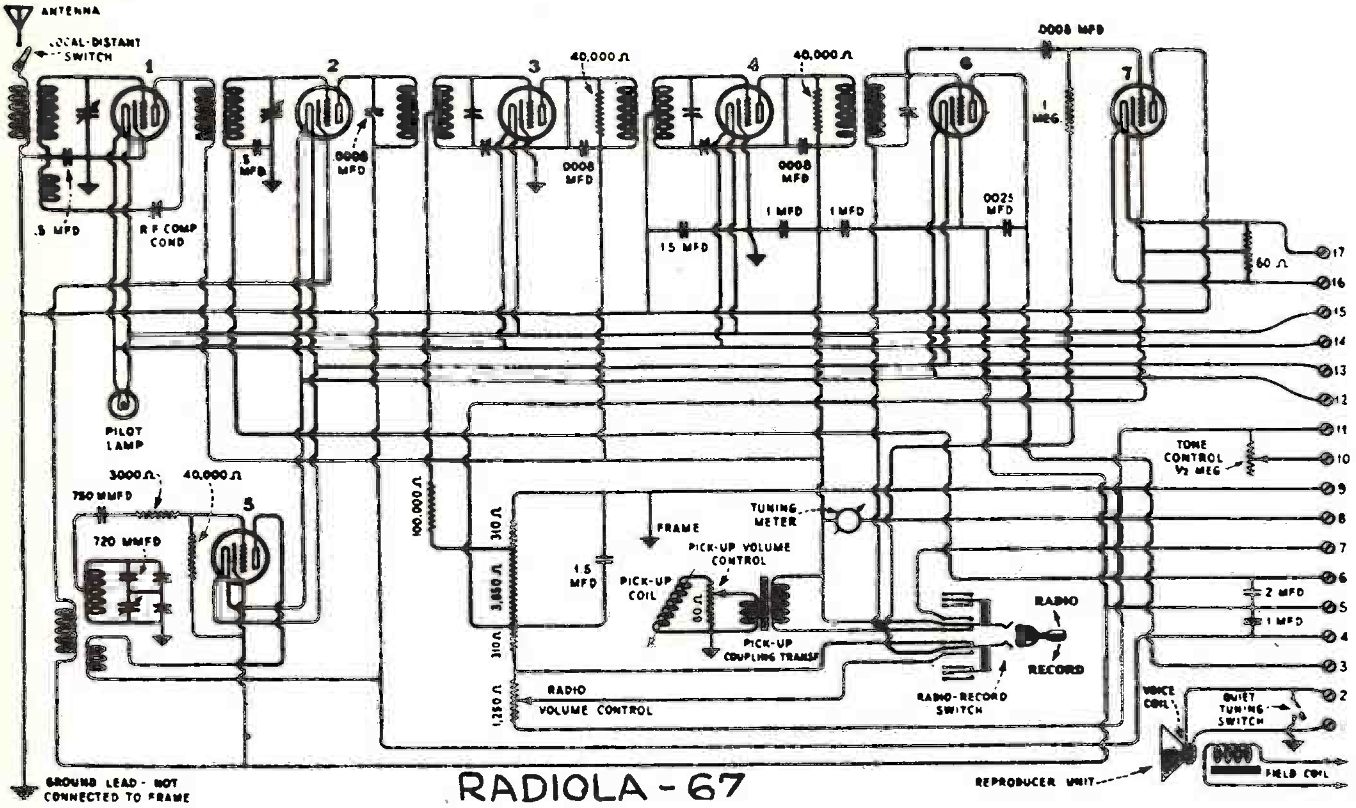

RADIOLA - 67

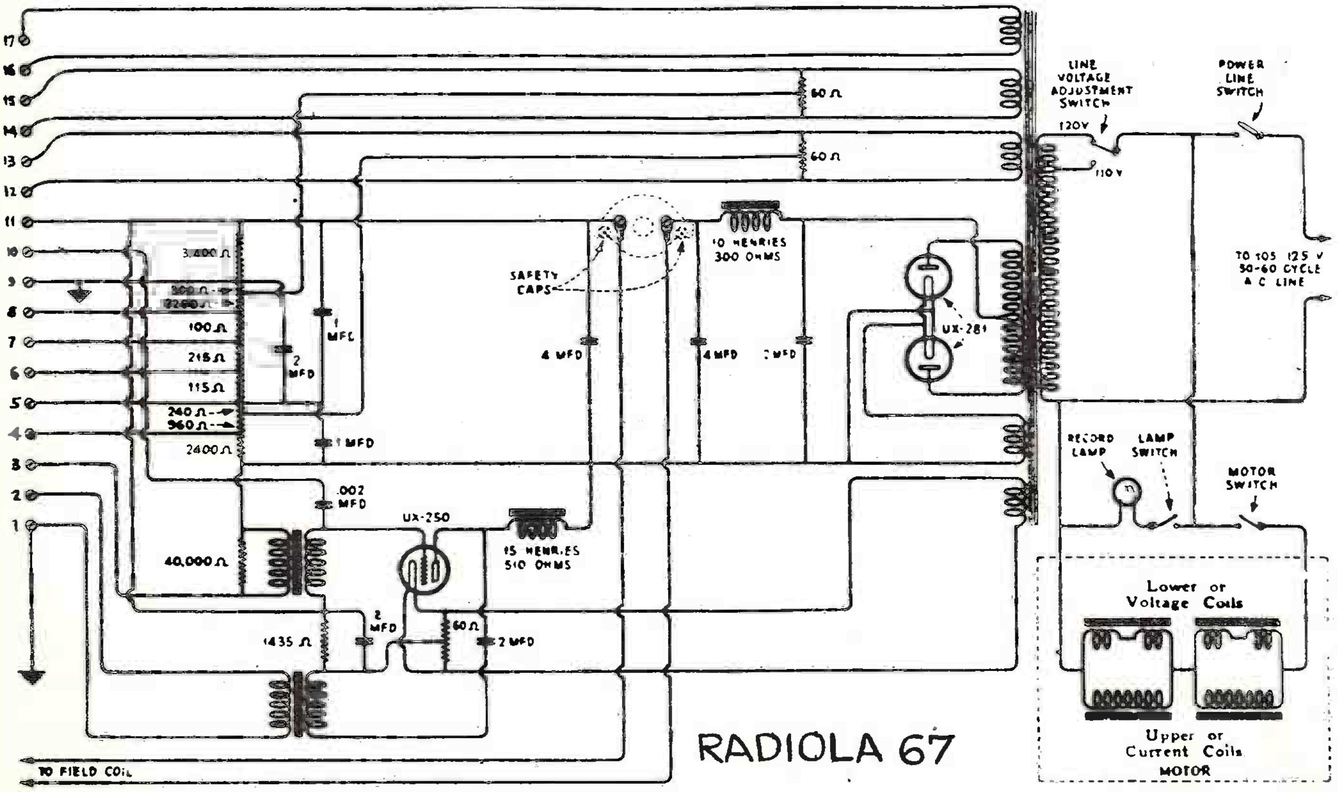

RADIOLA 67

R.C.A.-VICTOR CO.

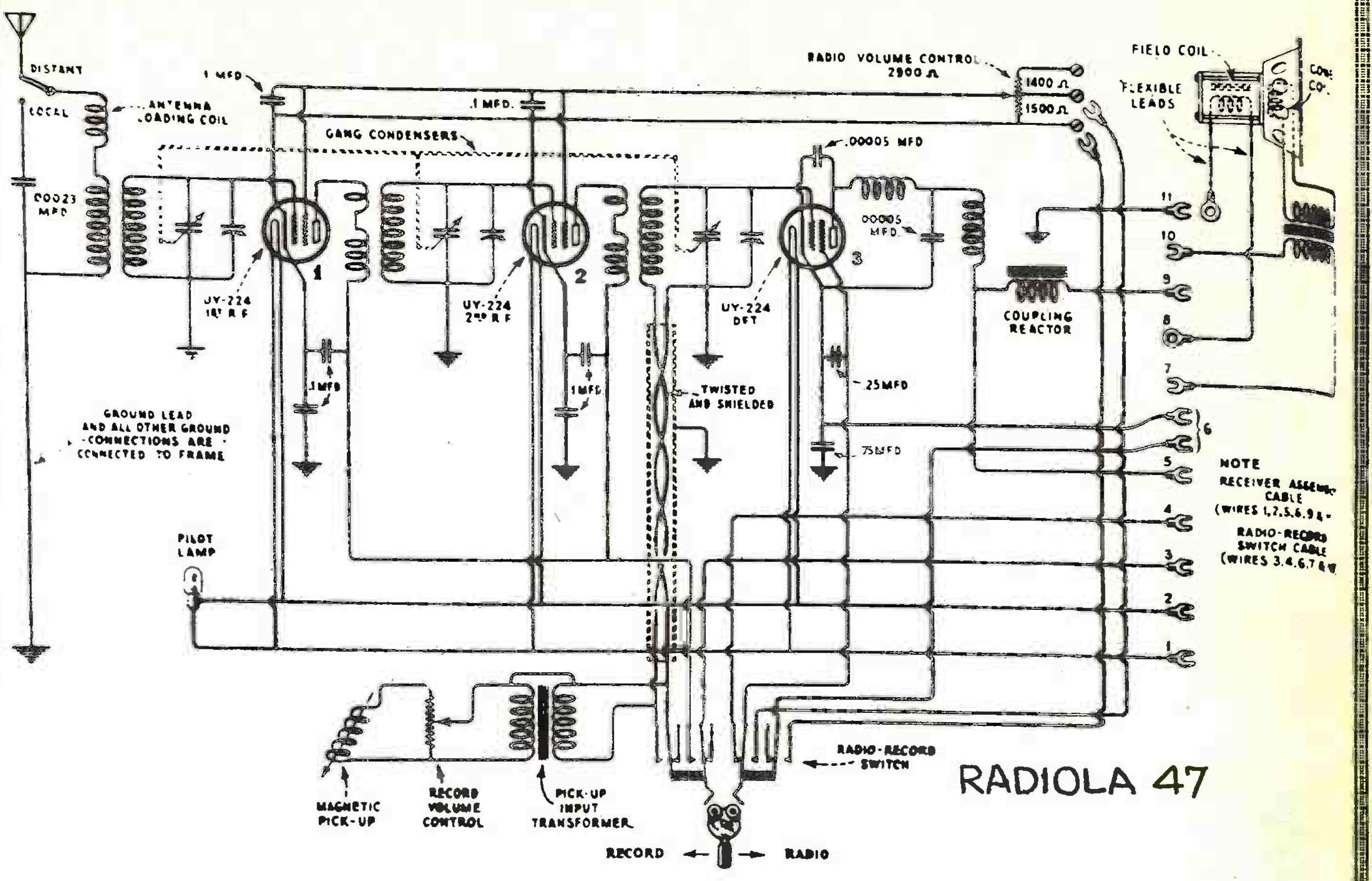

RADIOLA 47

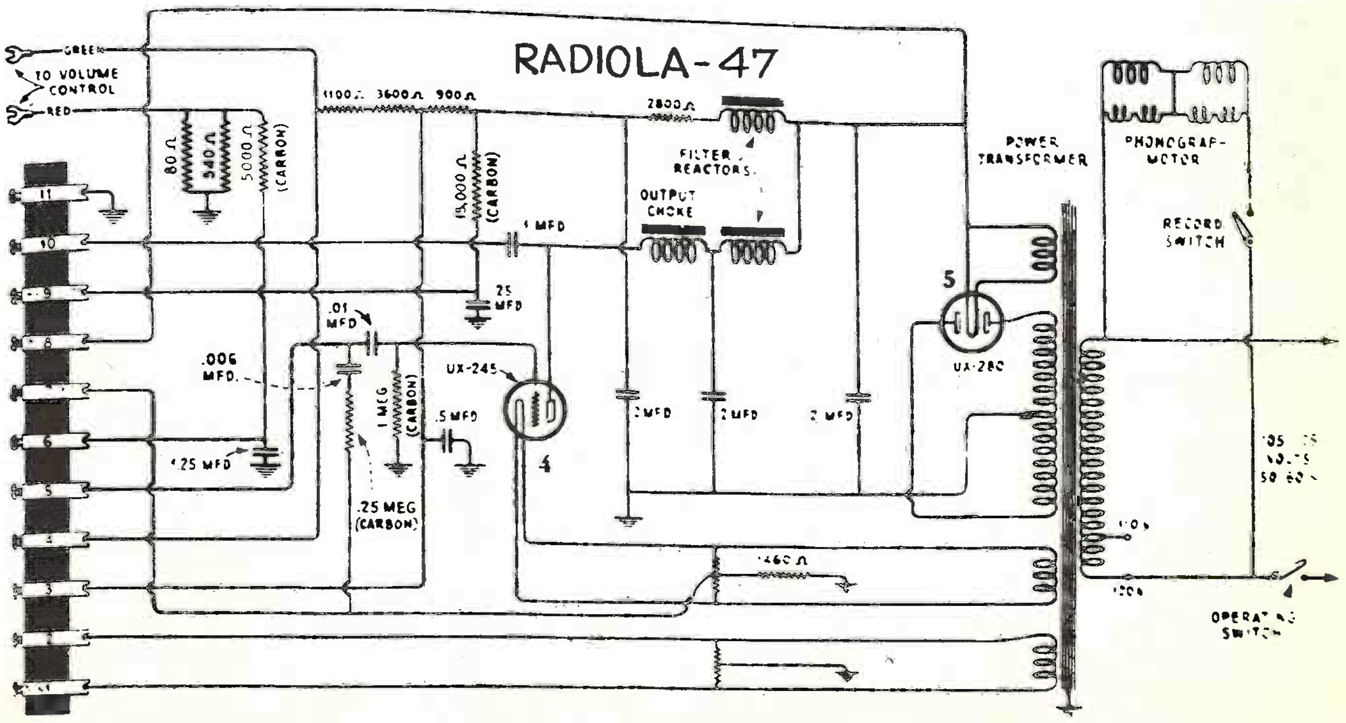

RADIOLA-47

R.C.A.-VICTOR CO.

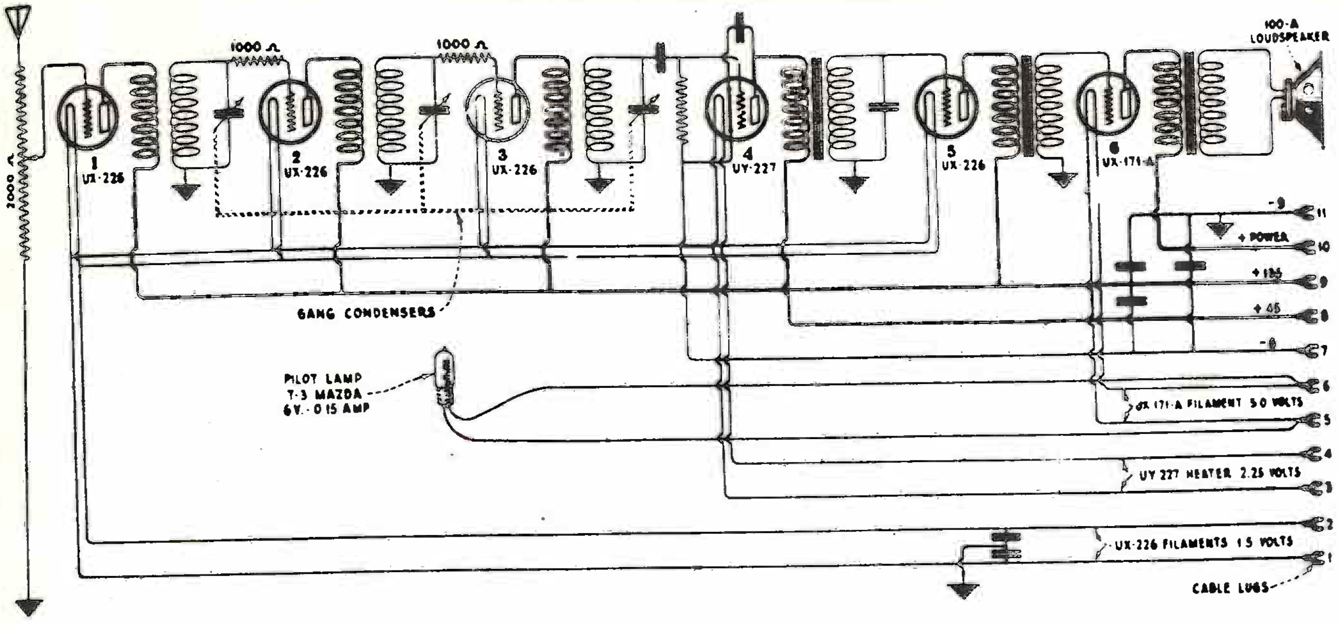

Schematic circuit diagram of the receiver assembly of RCA Radiola 50

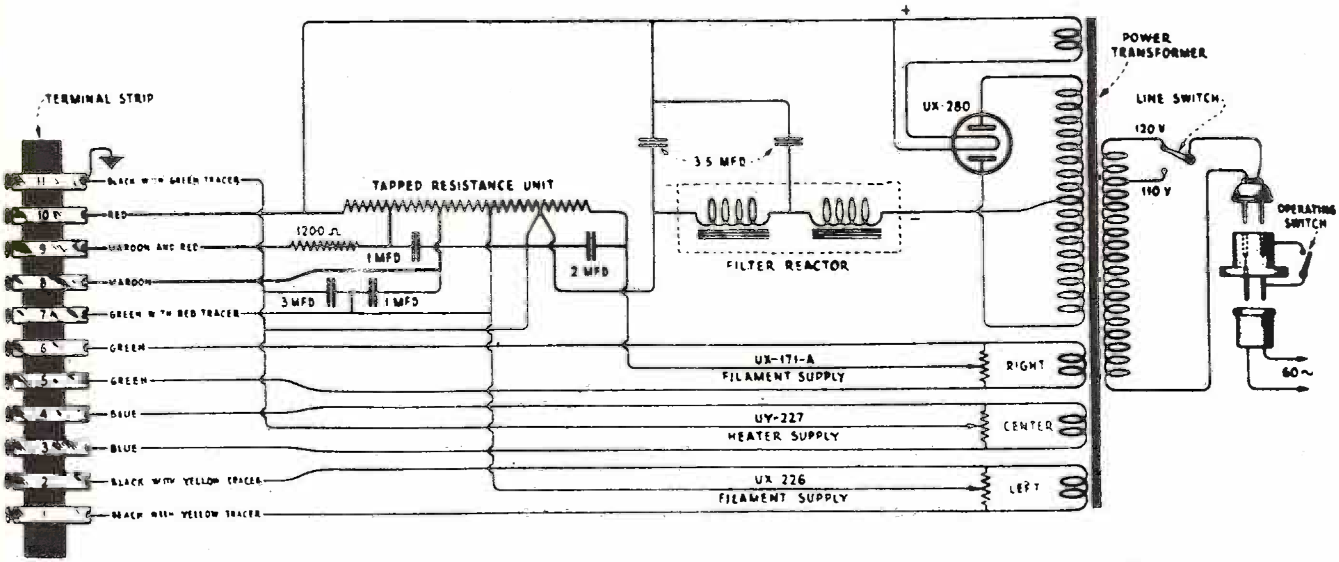

Schematic circuit diagram of the Socket Power Unit of RCA Radiola 50

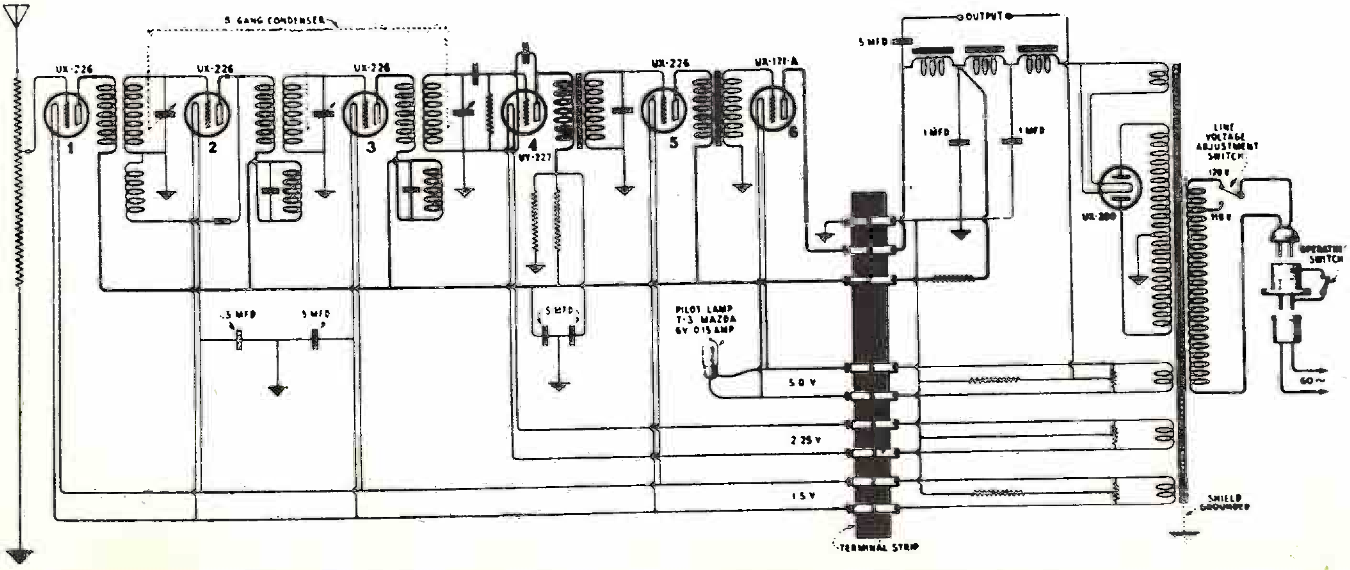

Schematic circuit diagram of the receiver and socket power unit of Radiola 51

R.C.A.-VICTOR CO.

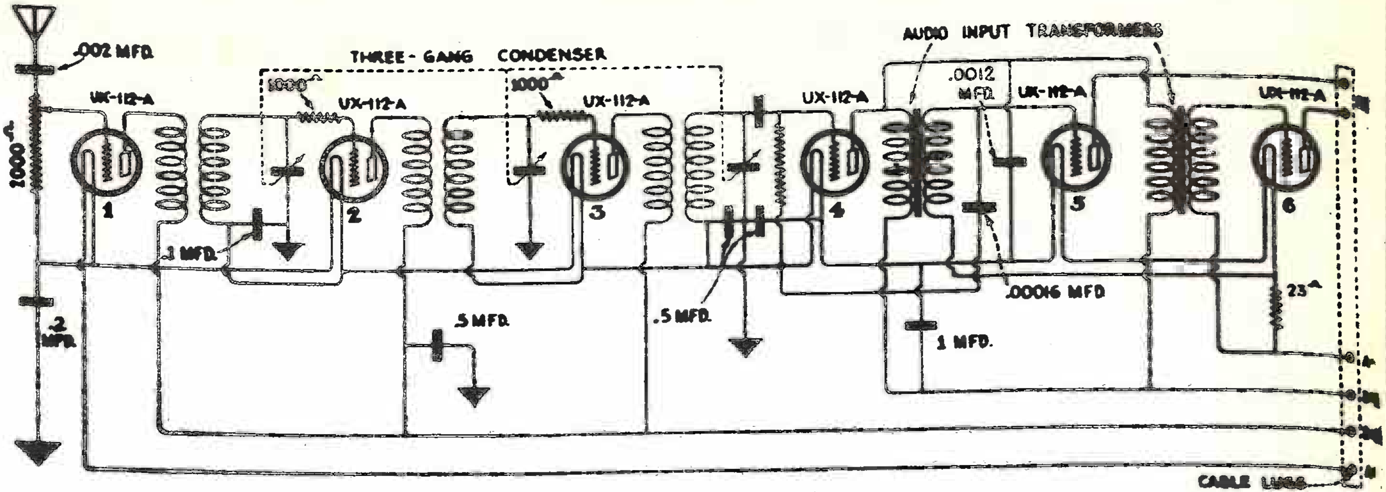

RADIOLA 41 D.C.

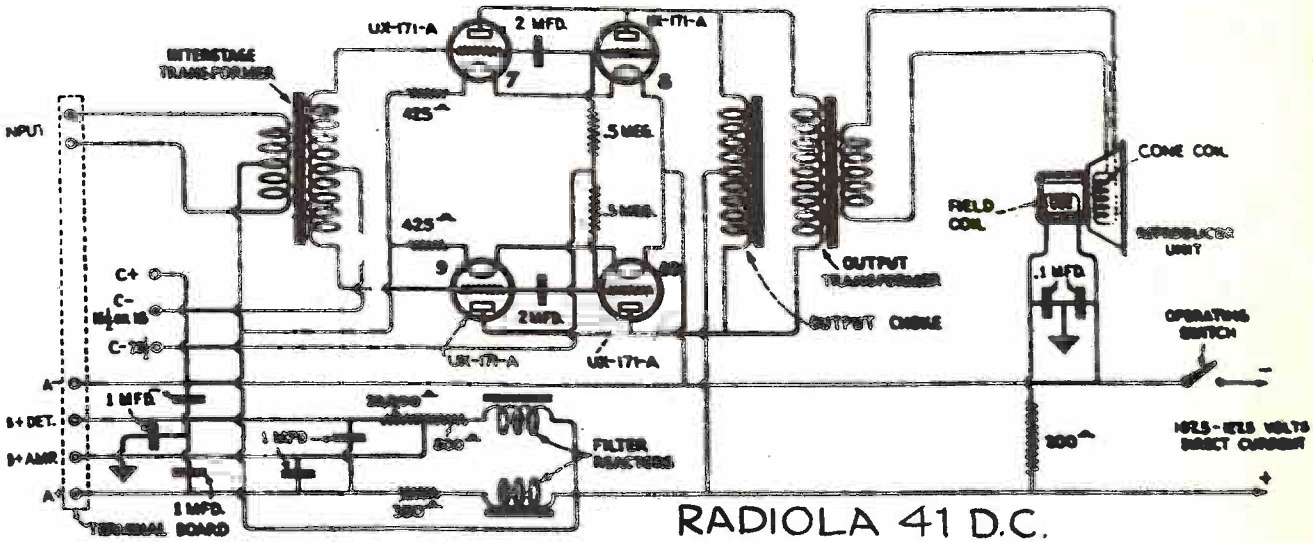

RADIOLA 41 D.C.

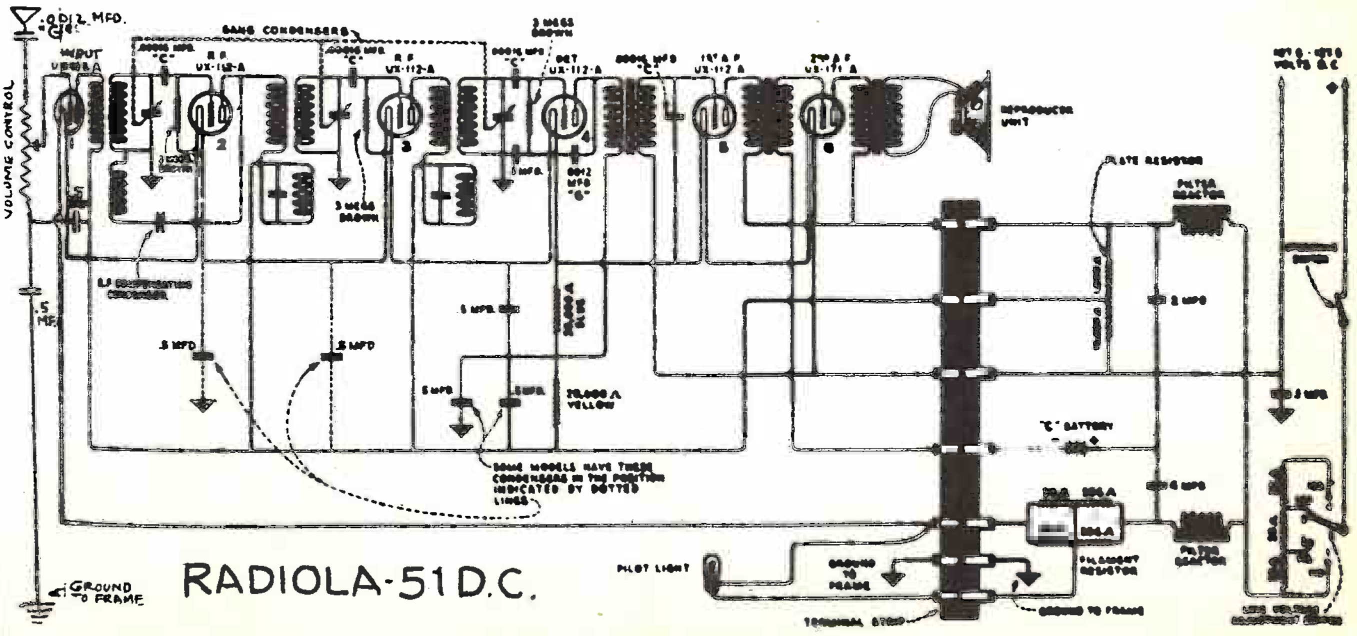

RADIOLA-51 D.C.

R.C.A.-VICTOR CO.

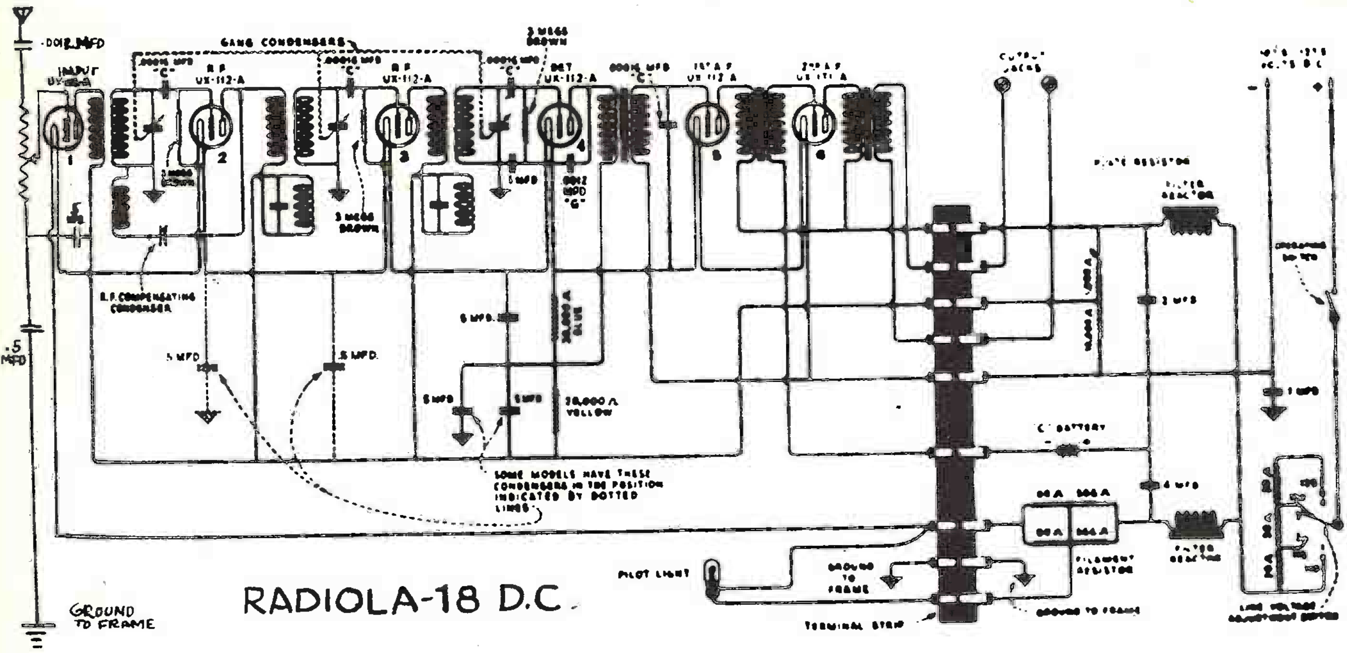

RADIOLA-18 D.C.

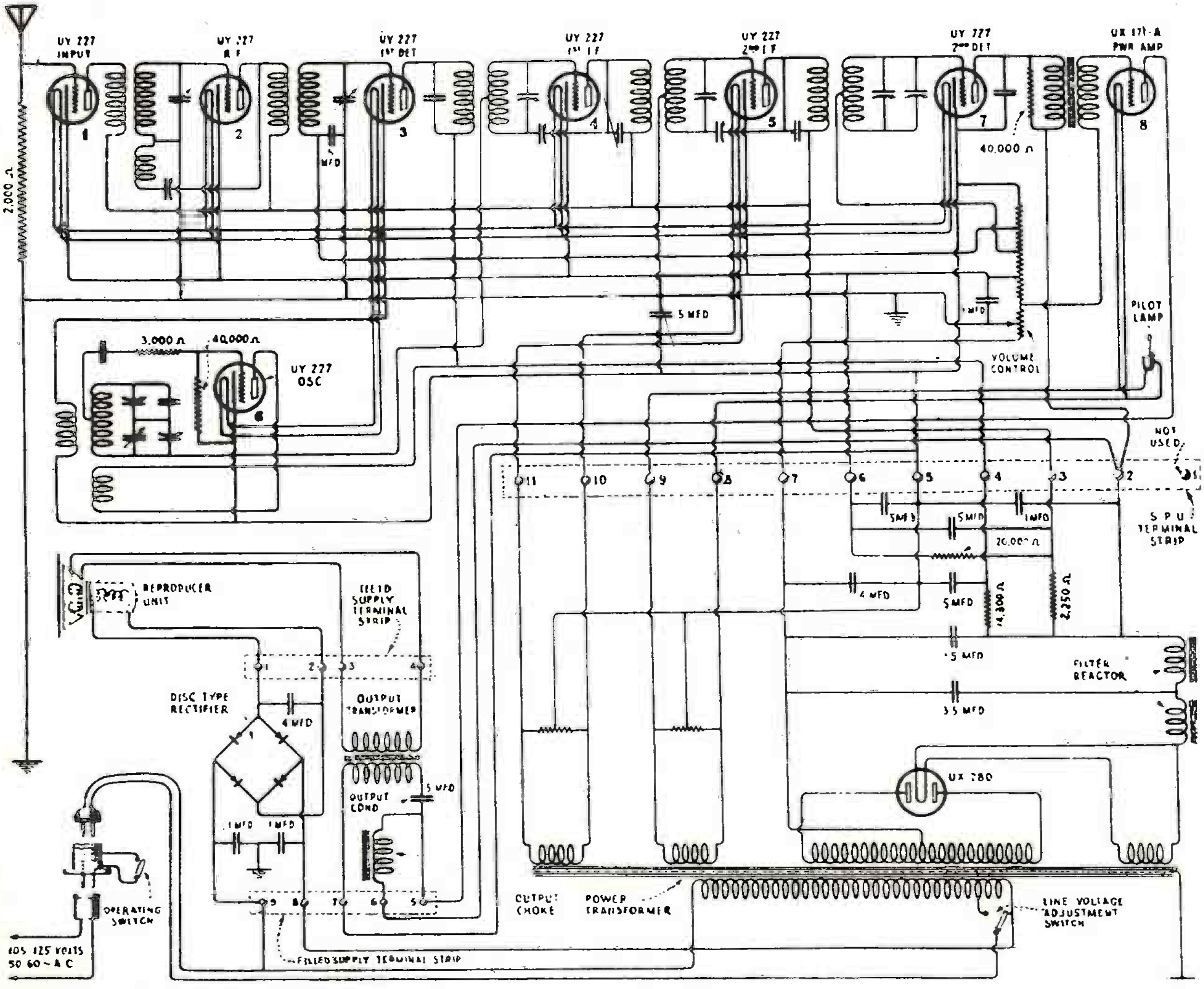

RADIOLA-62

R.C.A.-VICTOR CO.

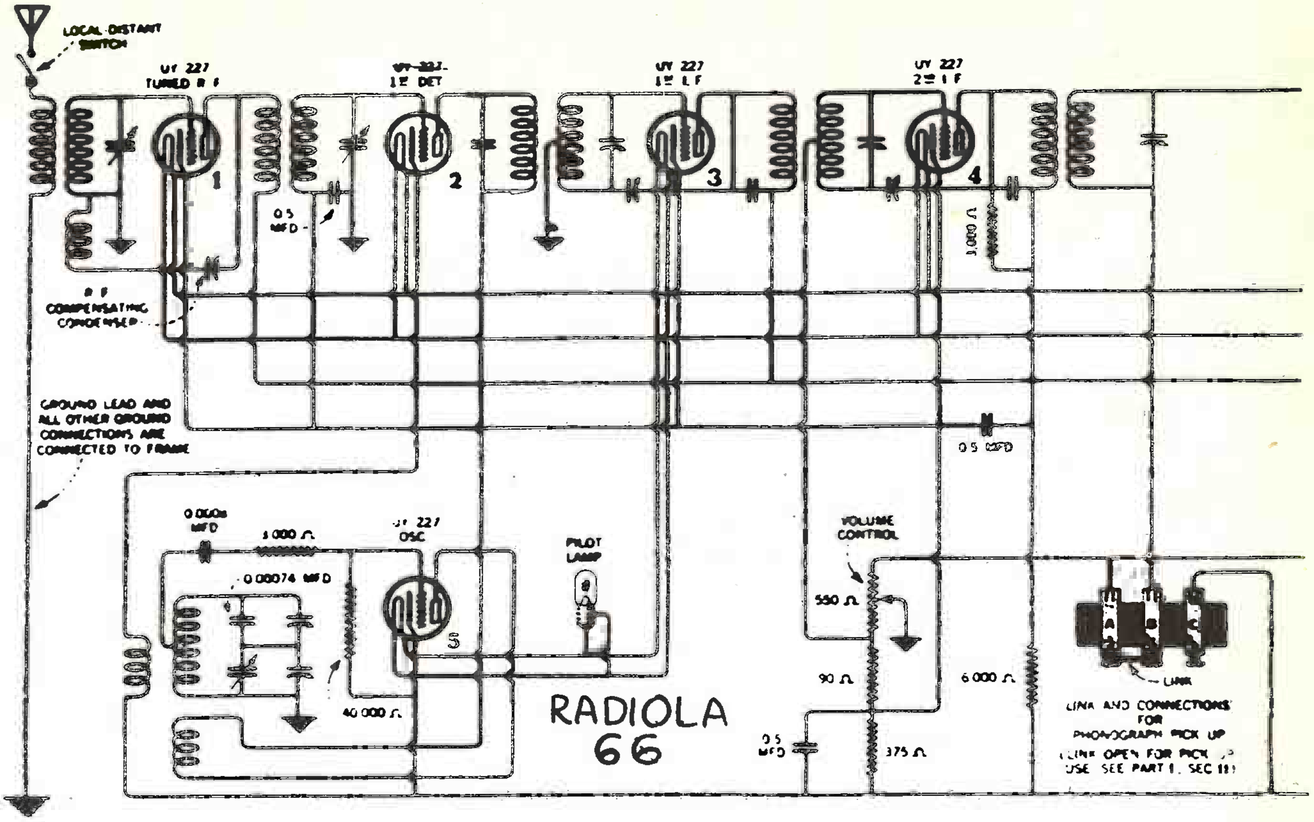

RADIOLA 66

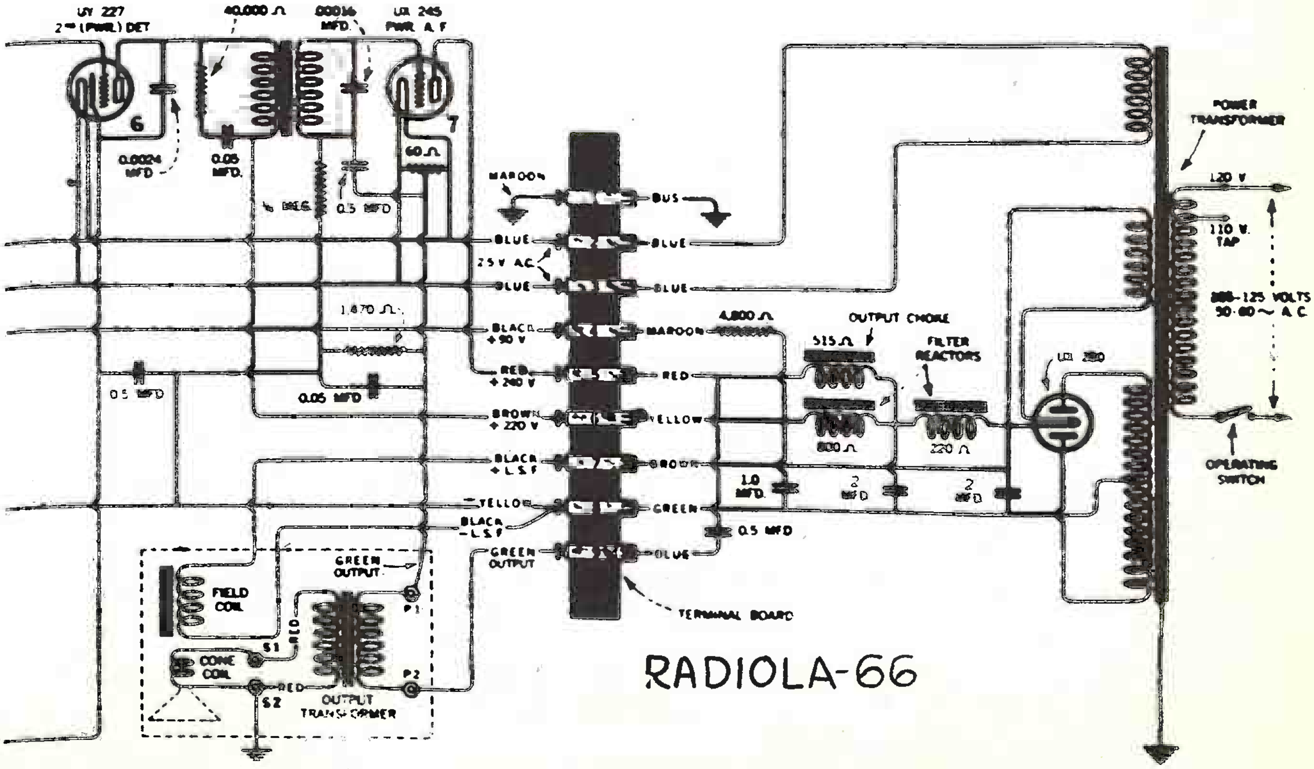

RADIOLA-66

R.C.A.-VICTOR CO.

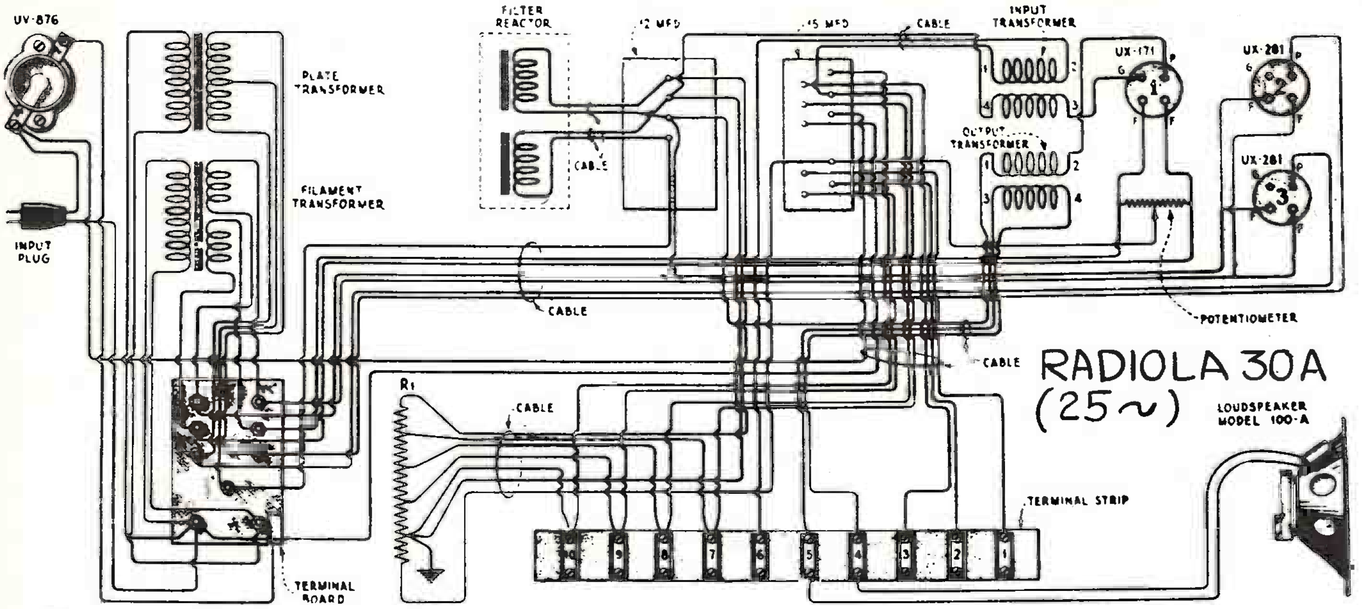

RADIOLA 30A (25~)

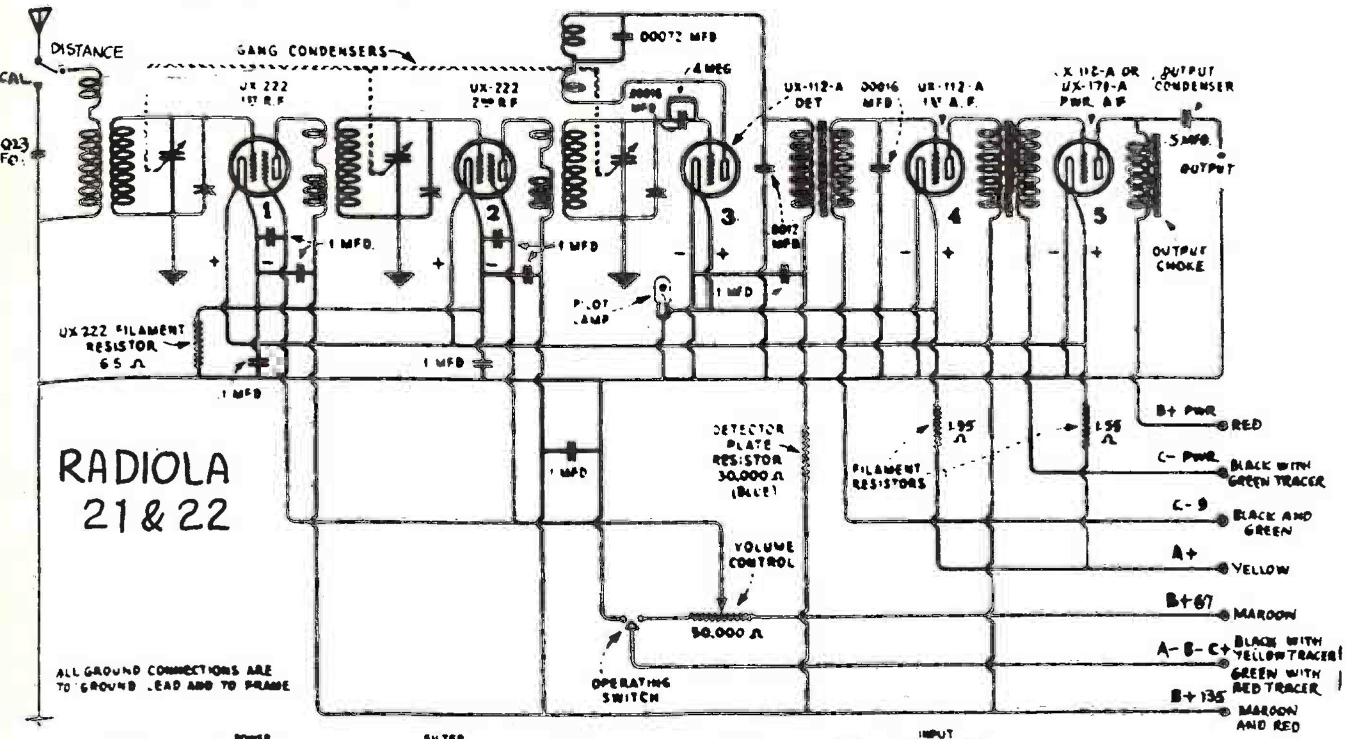

RADIOLA 21 & 22

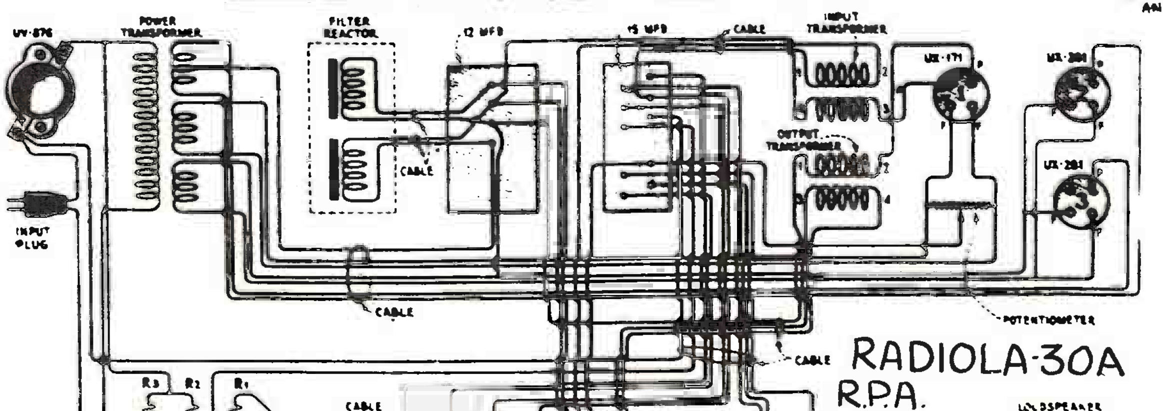

RADIOLA-30A R.P.A. UNIT

R.C.A.-VICTOR CO.

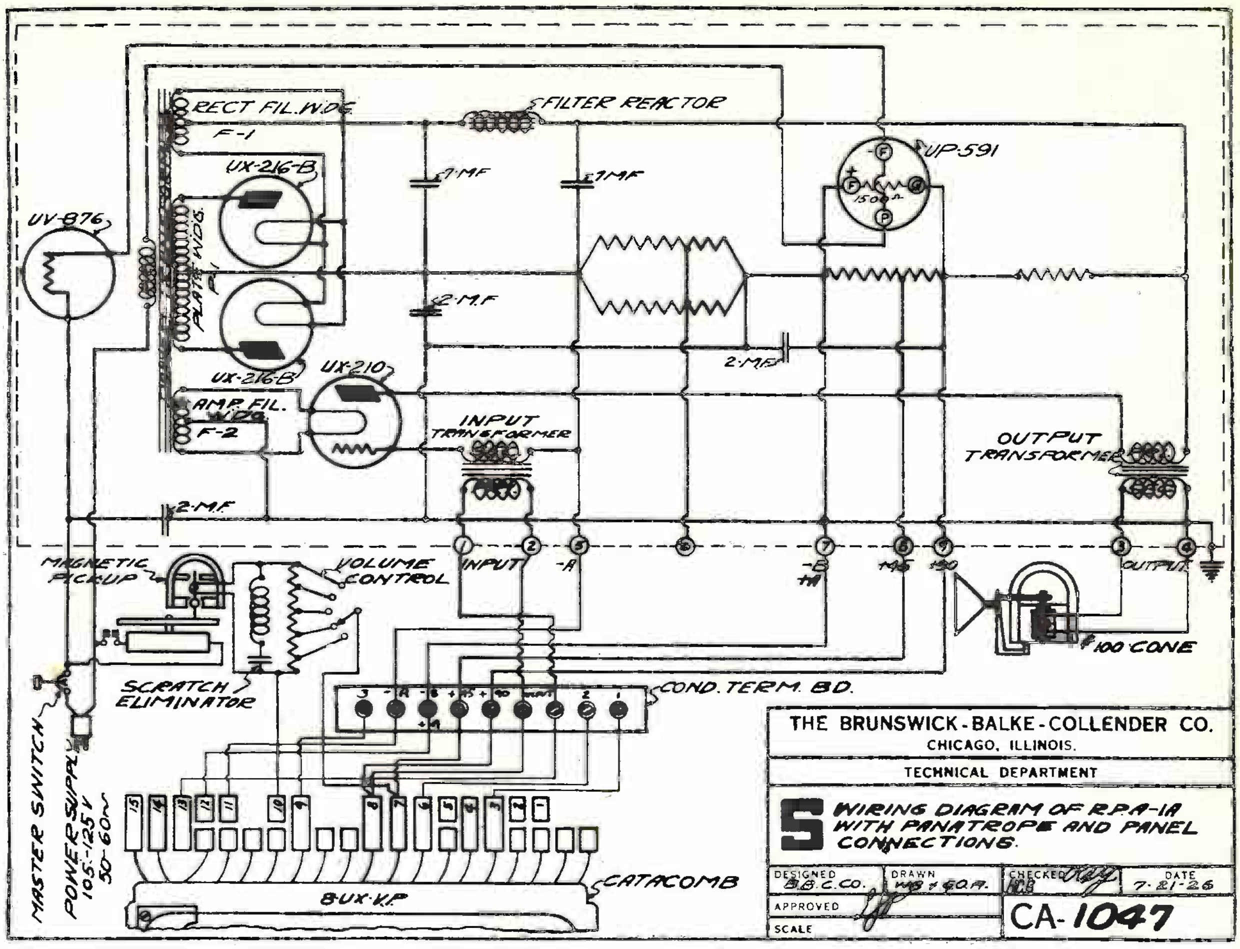

THE BRUNSWICK-BALKE-COLLENDER CO.
CHICAGO, ILLINOIS.
TECHNICAL DEPARTMENT
S WIRING DIAGRAM OF R.P.A-1A WITH PANATROPE AND PANEL CONNECTIONS.
DESIGNED B.B.C.CO. DRAWN W.B. & E.Q.A. CHECKED H.C.B. DATE 7-21-26
APPROVED
SCALE
CA-1047

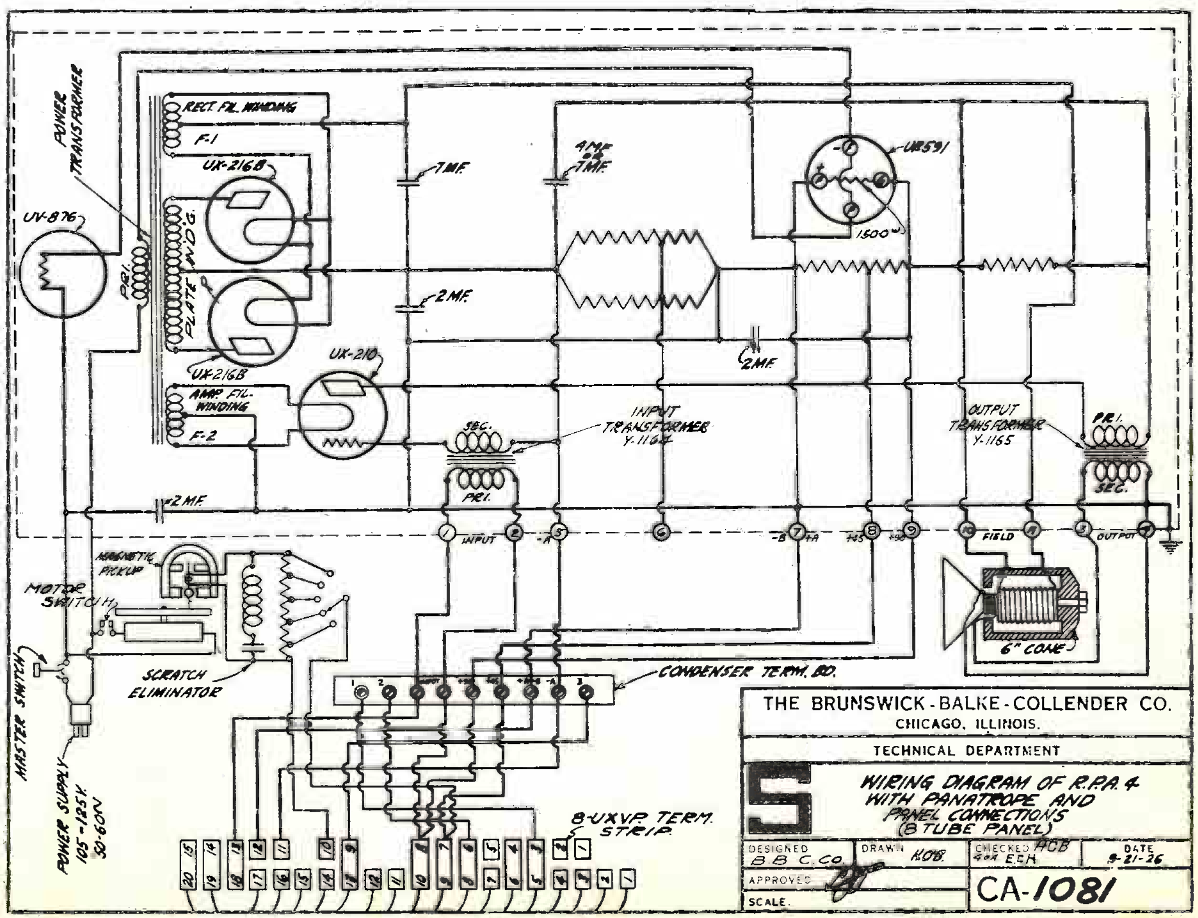

THE BRUNSWICK-BALKE-COLLENDER CO.
CHICAGO, ILLINOIS.
TECHNICAL DEPARTMENT
S WIRING DIAGRAM OF R.P.A. 4 WITH PANATROPE AND PANEL CONNECTIONS (8 TUBE PANEL)
DESIGNED B.B.C.Co. DRAWN H.O.B. CHECKED HCB for E.C.H. DATE 9-21-26
APPROVED
SCALE.
CA-1081

R.C.A.-VICTOR CO.

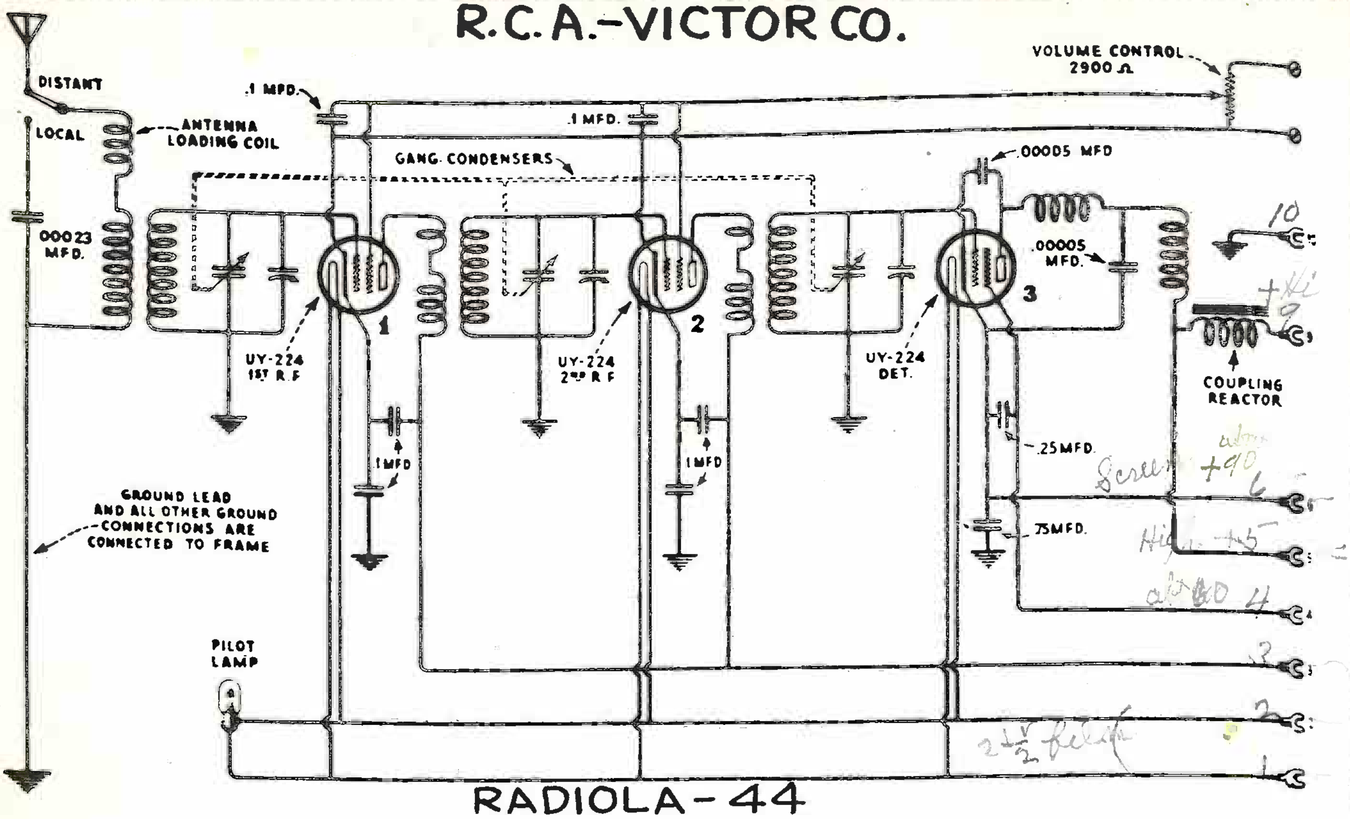

RADIOLA-44

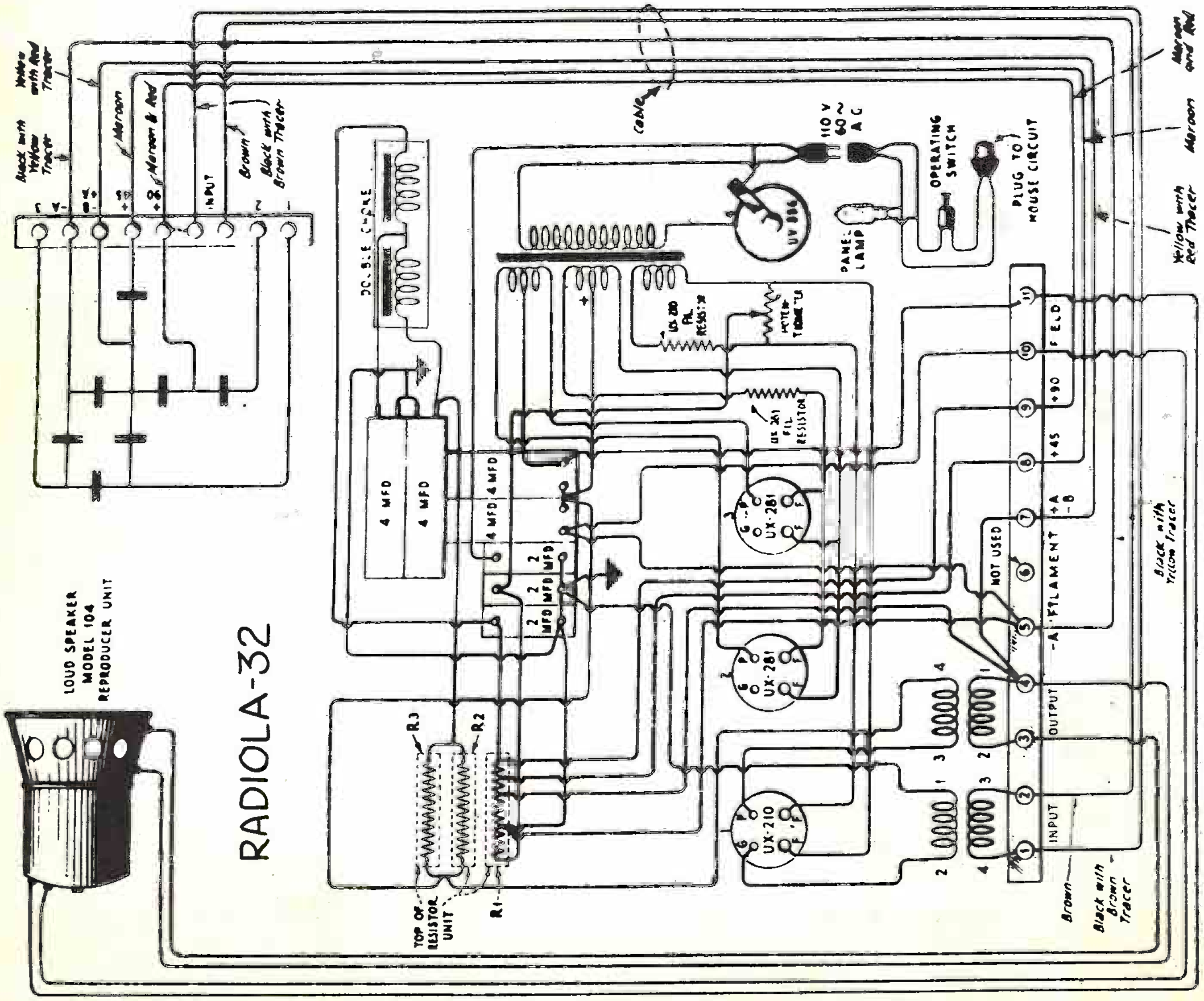

RADIOLA-32

R.C.A.-VICTOR CO.

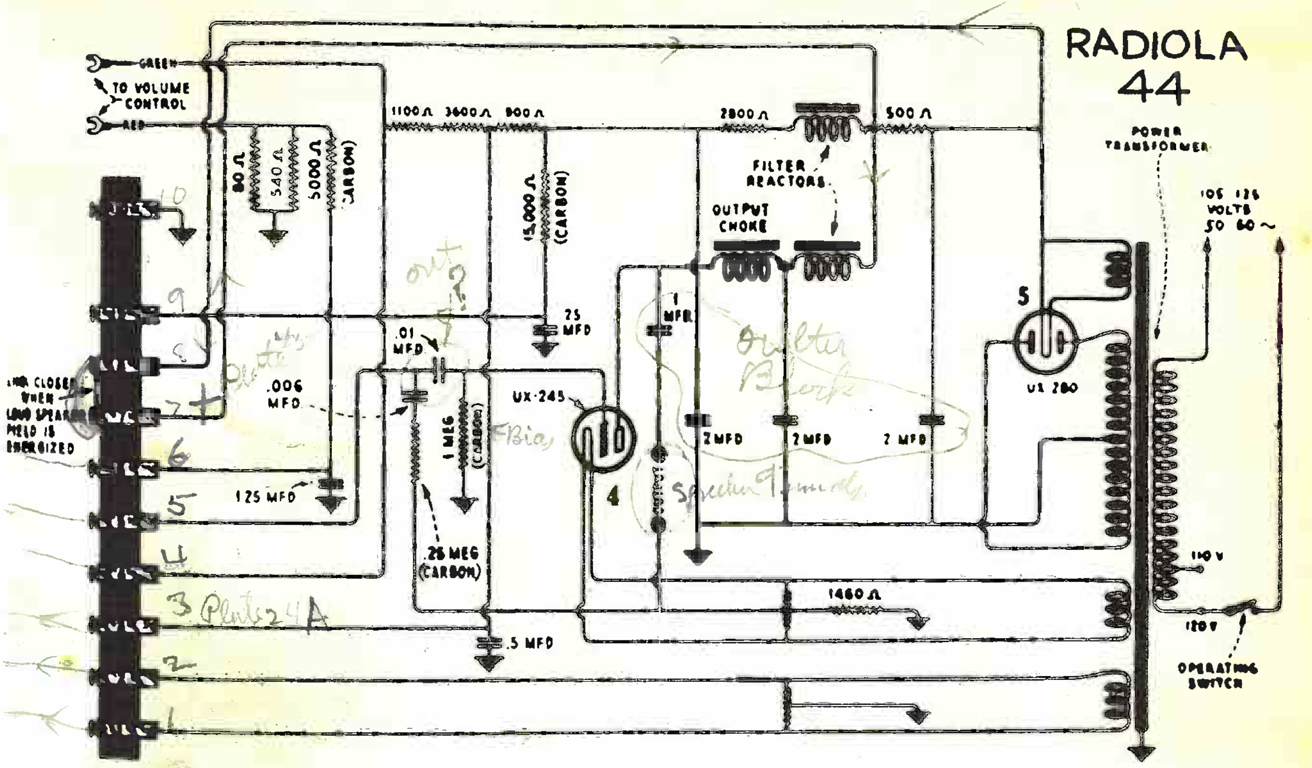

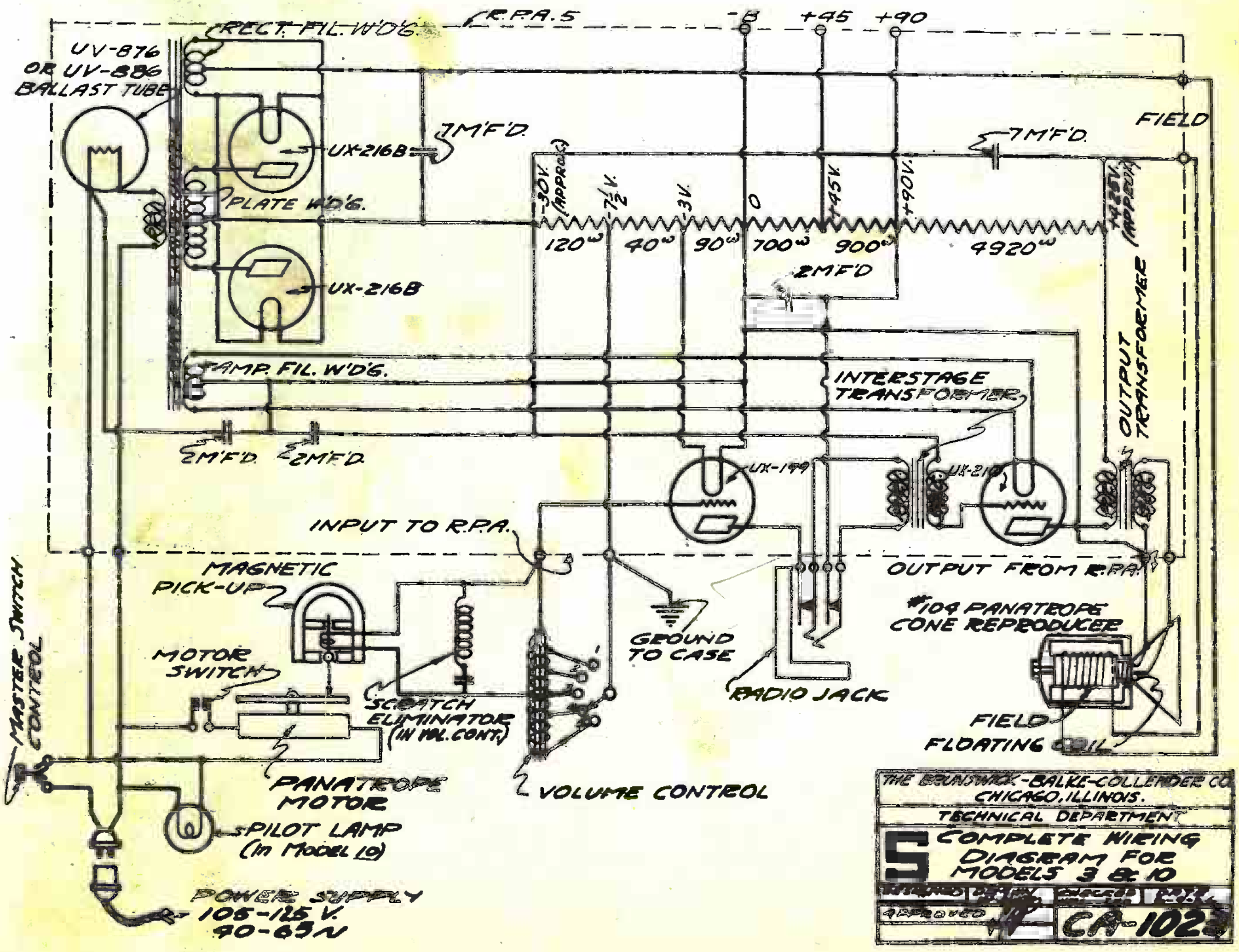

Radio Service Data Sheet

SILVER RADIO MODELS 30 (CHASSIS), 60 LOWBOY, 95 HIGHBOY AND 75 CONCERT GRAND

This chassis utilizes '24 type screen-grid tubes in the first four stages: an aperiodic antenna coupler feeds V1, which is connected to V2 through the band selector L2-L3-L4. V3 is the third R.F. stage, and V4 a power detector which is followed, however, by a '27-type first audio stage V5. In the push-pull power stage, V6 and V7 are '45s.

The volume control in this receiver is the 10,000-ohm potentiometer P1; while the low-resistance instrument P2 is the hum balancer. P1 is a metal-frame component ("PP No. 4477"—Yaxley "Type 510,000") and must not, under any circumstances, be replaced with one of the earlier bakelite frame type. When inserting a new unit, drop a fiber washer over the shaft bushing; the lock-nut should be removed and a fiber spacing washer used to insulate the potentiometer shaft from the metal chassis. After replacing the front panel, which is fastened by the lock-nuts of the power switch SW1 and the "overtone switch" Sw2, a second fiber spacing washer is dropped over the shaft of P1, and its nut tightened. A test for a ground to the chassis should be made before soldering the connecting leads of P1.

While the low-note amplification of this receiver is high, and the normal operating hum faintly discernable, if this becomes excessive try other tubes in the detector and audio sockets. The power tubes should be selected for matched characteristics.

In the earlier models of this receiver, the cathode resistor R8 was connected to the white lead of the condenser bank C13, and thus by-passed by 1 mf. capacity; while both red leads of C12 ran to the cathode of V4. In these receivers, produced before July 8, 1929, it will be found desirable, for the reduction of hum, to rearrange the connections as shown in the diagram below.

The receivers with a serial number above 12,907 contain the "Type 30 filter"—comprising L12 and C14; in the 25-cycle models, C14 is connected as indicated in dotted lines; in 60-cycle receivers, as shown by full lines.

In receivers of a lower number, it may be desirable to add this unit to reduce hum. Without it, plate potential readings taken from these sets will be found about 10 volts higher than the figures shown below; in later models, the resistance of the choke coil L12 ("No. 339U") causes this drop.

The following figures represent the average readings obtained on a Jewell "Model 199" set analyzer, with the line-voltage at 114 and the volume control set at maximum:

Tube	*Screen*	*"A"*	*"B"*	*"C"*	*K*	*Plate Ma.*
V1	60	2.25	142	1.0	1.0	2.6
V2	58	2.25	140	1.4	1.4	2.3
V3	58	2.25	140	1.2	1.2	3.2
V4	40	2.25	55	5.4	10	0.2
V5	—	2.30	176	—	12	6.5
V6	—	2.30	205	40	—	28
V7	—	2.30	205	40	—	28

In normal operation, this receiver may be tested for noise by shorting the antenna and ground posts, and turning P1 to the full "on" position. Practically no background noise should then be heard at 550 kc.; no appreciable hiss becoming evident until the "Selector" drum has been turned to 1500 kc. Excessive noise may be due to tubes, wiring, or parts. Interchange the '24s until a quiet one has been obtained for V4, and another for V1 (the right-hand or first R.F. socket). V2 is the least critical '24 position.

Inability to receive stations between 200 and 214 meters (1400 and 1500 Kc.), or crystal-controlled transmissions below 230 meters (above 1300 Kc.), at their designated positions on the "Selector" drum, indicates the need for re-alignment of the tuning condensers. The correct procedure is: first, remove the chassis from the cabinet, and put it in operation with the shield-can cover resting over only the first three (R.F.) compartments. Next, tune in a weak signal between 240 and 230 meters (1250 and 1300 Kc.), and start with the aligning condenser in shunt with C4; then, in succession, align C3, C2, C1. To align C2 for loudest signal, it will be necessary to unsolder the red wire from the rear stator soldering lug of C1. Then re-solder the red wire to the stator lug of C1 and unsolder both wires (*but leave them connected to each other*) from the stator lug of C2; and align C1 for loudest signal. Re-solder the wires to stator lug of C2. When they are properly adjusted, the aligning screw of C4 will be practically all the way in; those of C3 and C2 nearly all in; while that of C1 will be nearly all out and with frame and spring separated about ⅛-in. It is absolutely essential that the drum dial and volume control settings remain unchanged during the above operations, which must be carried out in the order specified. If the receiver will not tune down to 200 meters (1500 Kc.), the aligning process has been carried out with the aligning condensers screwed too-tight.

If the loud-speaker frame becomes ungrounded and "floats," the receiver will usually oscillate; as, also, if the ground lead is unconnected, poor tubes are in use, the R.F. plate leads incorrectly located, or tube shields not firmly in position. It is vitally important that the three red R.F. plate leads (leading from lugs of sockets of V1, V2, V3, through and under chassis partition to their respective inductors) be pushed down carefully into the angle between the chassis and the partitions, where they run from the socket lug up to the slot in the partition. If, during previous servicing, these leads have been allowed to straggle through the set, and are not placed exactly as specified, the circuits will invariably oscillate. An infrequent cause of circuit oscillation is a short of L10; or a defective C5 or C8.

If the "overtone" switch SW1 fails to change the timbre of programs, carefully check the values of C5, C7 and C8.

A tension screw on the hub of the dial, which is held by a lock-nut, permits the drive cord to be tightened when necessary.

If it becomes necessary to replace an R.F. coil, the replacement coil *must* have upon its end the same crayon identifying number as the defective coil.

The following values are used in the Silver "Model 30" chassis: C5, C7, .00015-mf.; C6, .006-mf.; C8, .001-mf.; C9, C10, C11, C12, 0.1-mf.; P1, 10,000 ohms; R1, R2, R3, 400 ohms; R4, R5, R6, 2600 ohms; R7, 60,000 ohms (blue); R8, 2,000 ohms (white); R9, 10,000 ohms (green); R10, 300,000 ohms (yellow); R11, 3500 ohms (brown); R12, R13, one 800-1500-ohm tapped resistor; R14, 2 megs. (red); C14, 2 mf. L1, L7, L8, L9, L10 are "Type 274U" R.F. chokes.

A screen antenna is contained inside the cabinet top.

To readjust the gang condenser bearings, if they are too tight, loosen the dial set screws sufficiently to free the dial, after removing the chassis. Adjust the condenser so that the rotor turns freely. First release all rotor spring tension screws. If the condenser is still tight, or if end-play exists, the thrust screw must be carefully adjusted. The rotor spring bearings should be adjusted one by one, so they do not press the rotor shaft upward. Otherwise, the screw should be completely removed and the upper spring so bent as to bear down upon the rotor shaft (as the screw is tightened) before the lower rotor spring forces the shaft upward. The proper adjustment of the rotor springs is when they are not loose enough to cause vertical play, but permit side play.

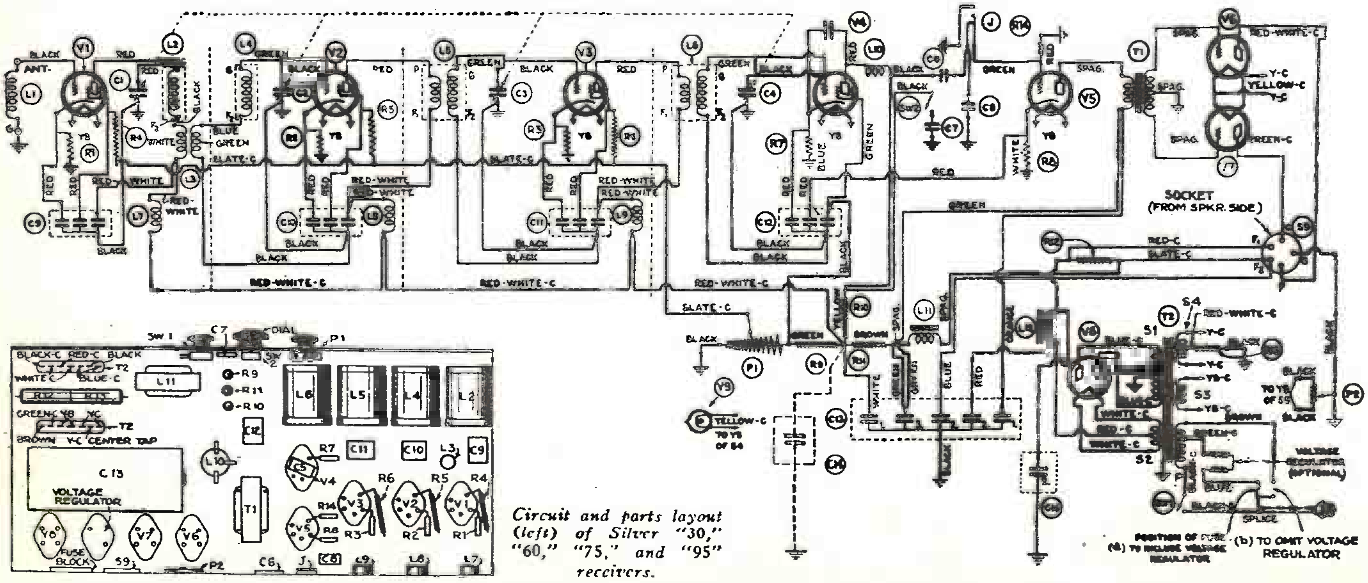

Circuit and parts layout (left) of Silver "30," "60," "75," and "95" receivers.

SONORA PHONOGRAPH CO., Inc.

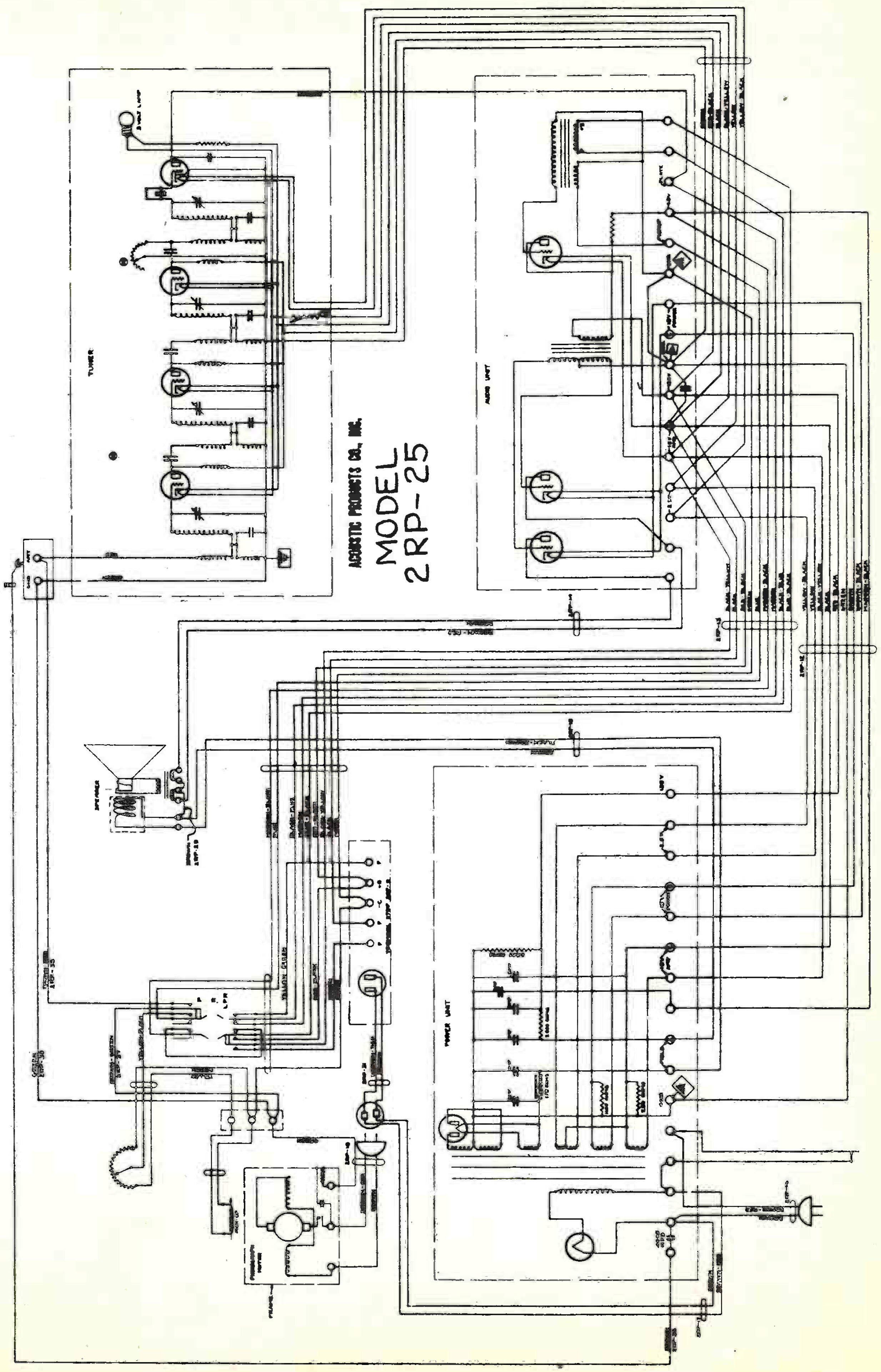

ACOUSTIC PRODUCTS CO., INC.

MODEL 2RP-25

SONORA PHONOGRAPH CO., Inc.

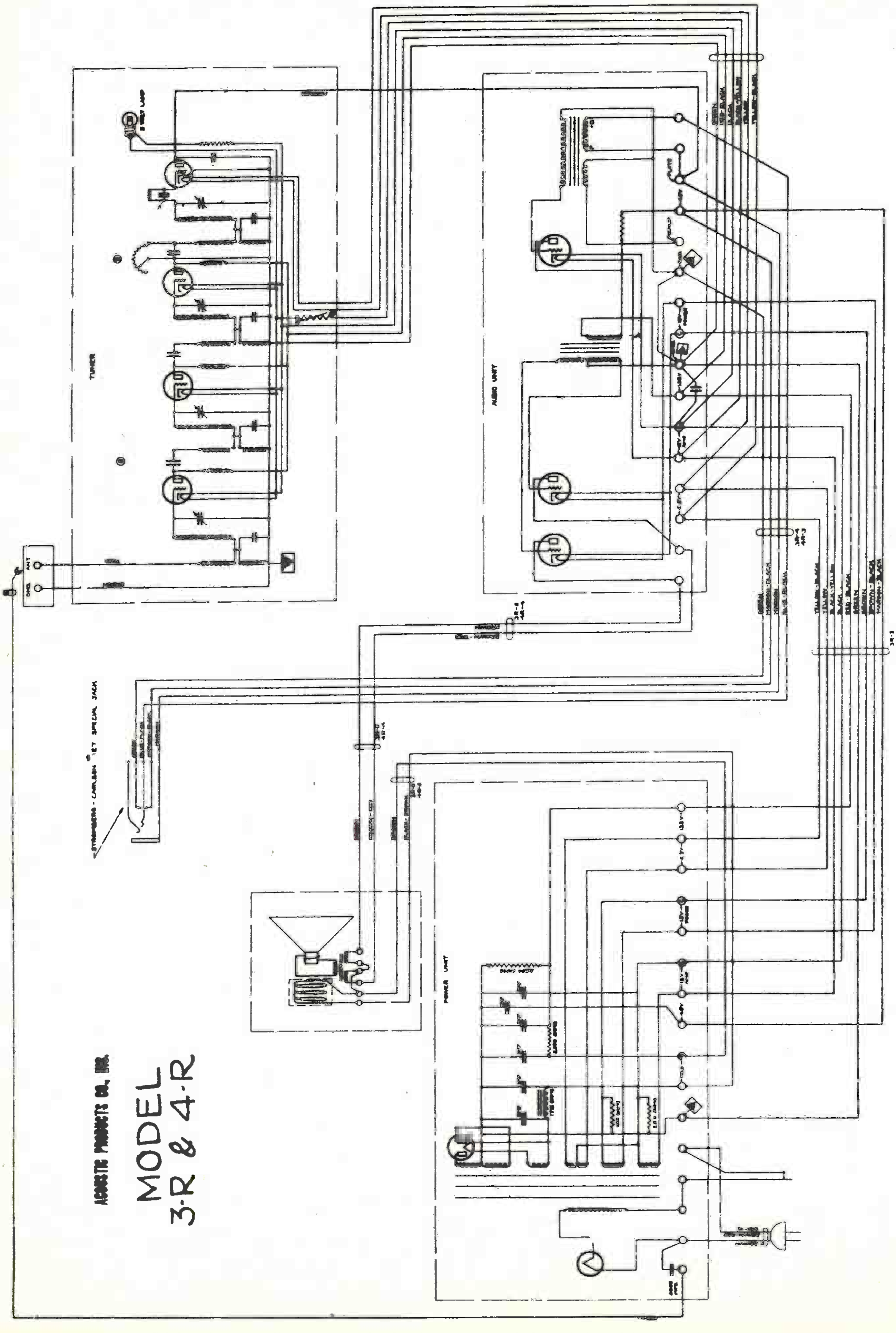

SONORA PHONOGRAPH CO., Inc.

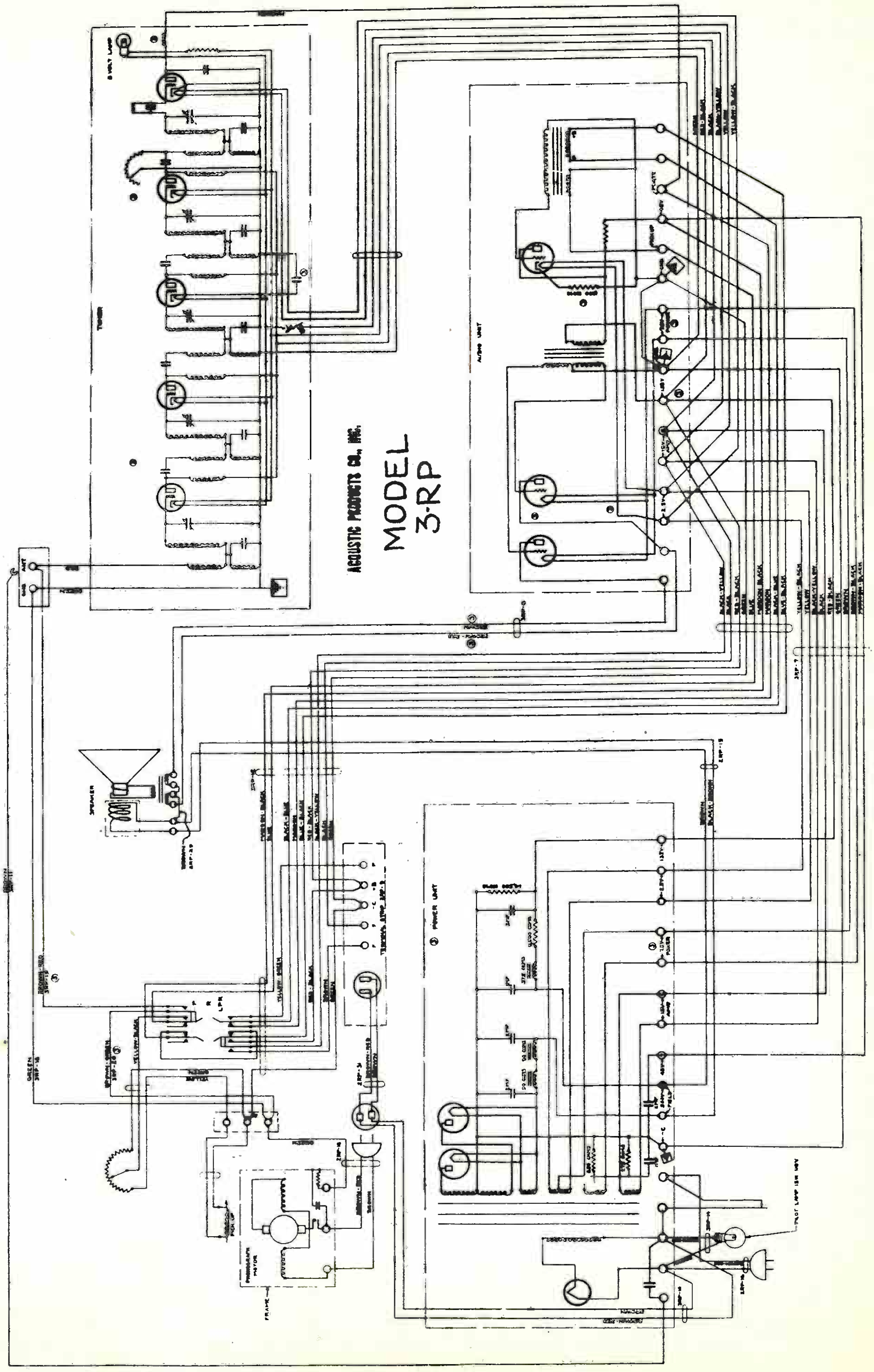

SONORA PHONOGRAPH CO., Inc.

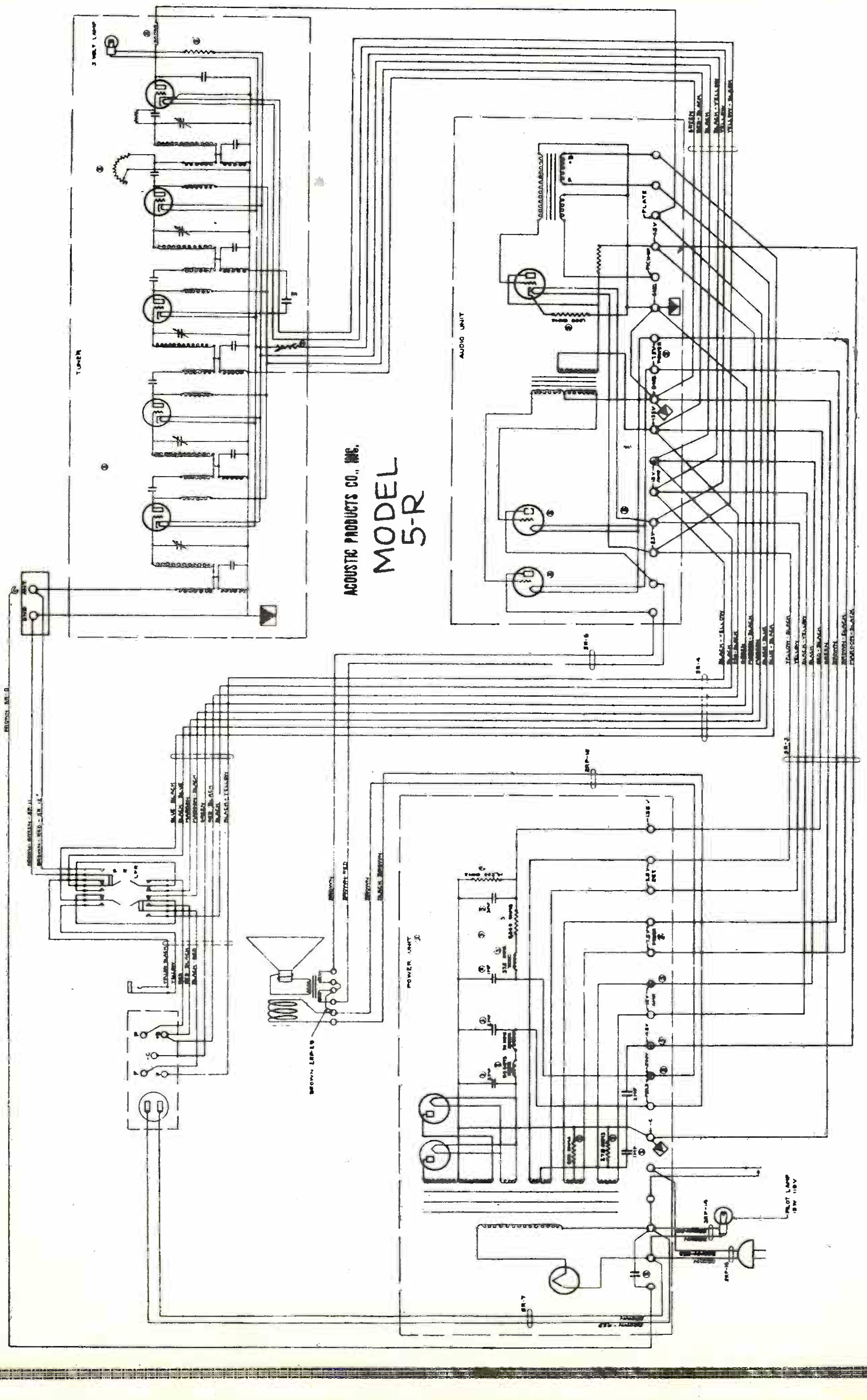

SONORA PHONOGRAPH CO., Inc.

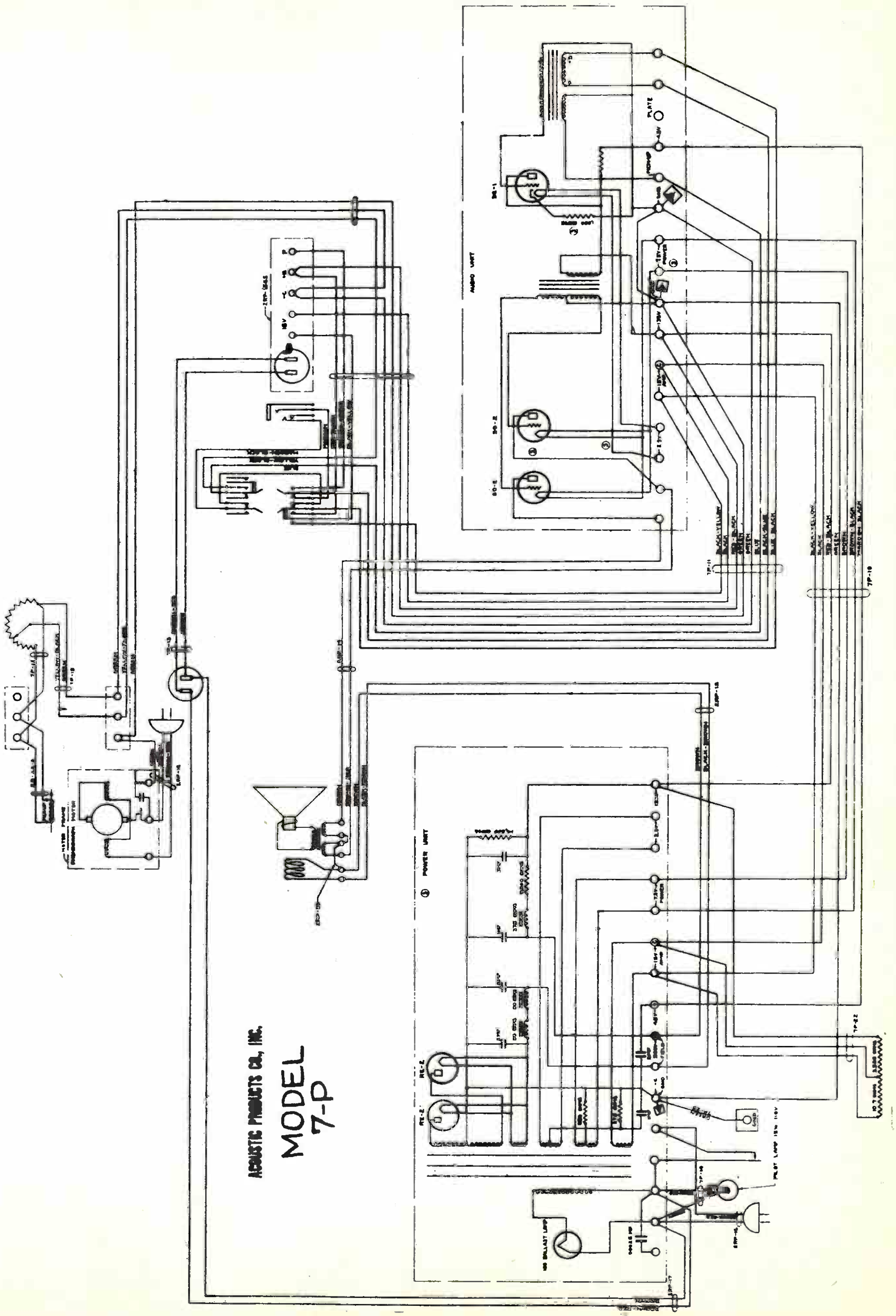

ACOUSTIC PRODUCTS CO., INC.

MODEL 7-P

SONORA PHONOGRAPH CO., Inc.

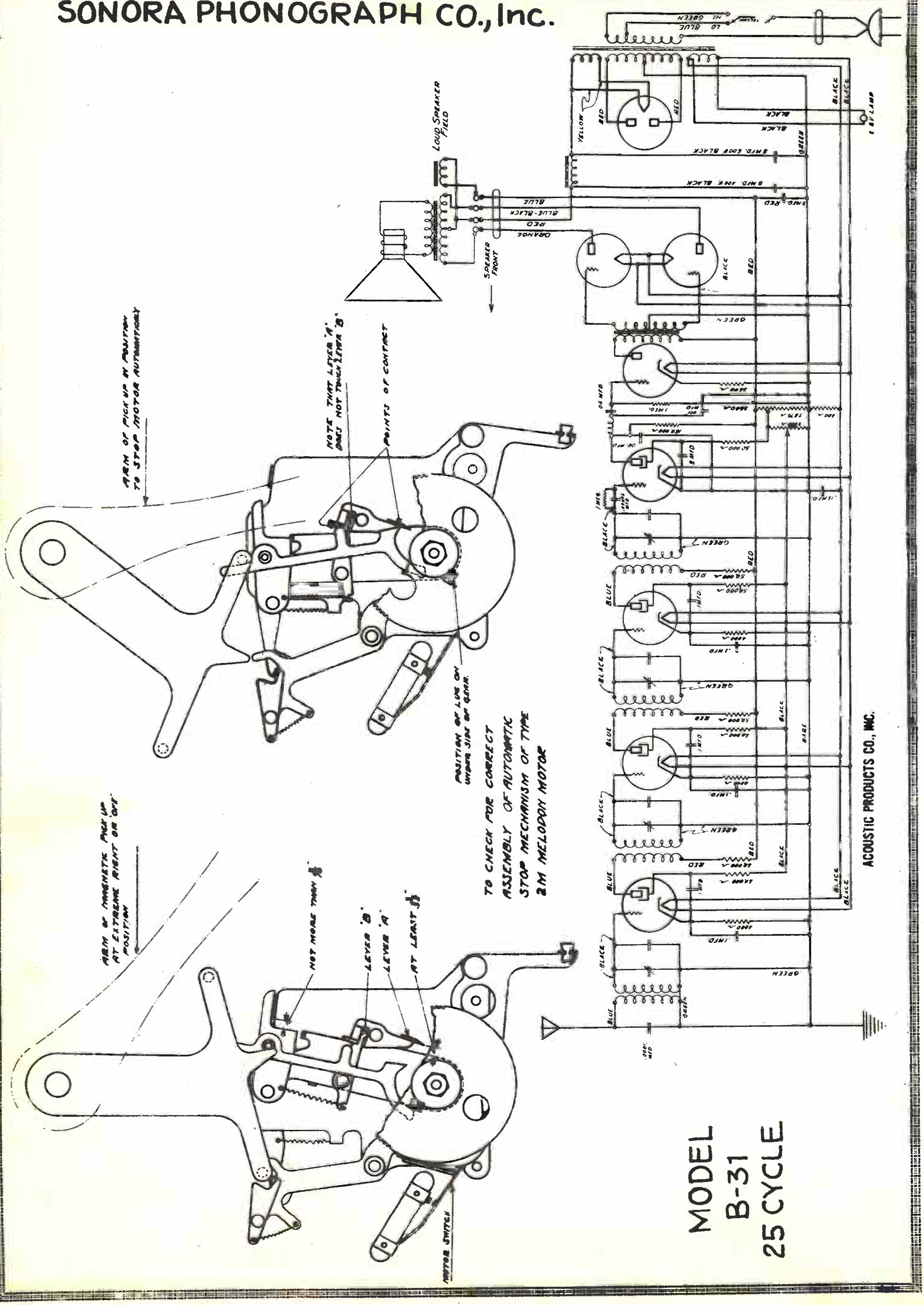

TO CHECK FOR CORRECT ASSEMBLY OF AUTOMATIC STOP MECHANISM OF TYPE 2M MELODON MOTOR

ACOUSTIC PRODUCTS CO., INC.

MODEL
B-31
25 CYCLE

SPARKS-WITHINGTON CO.

SPARTON
MODEL-39
RECEIVER

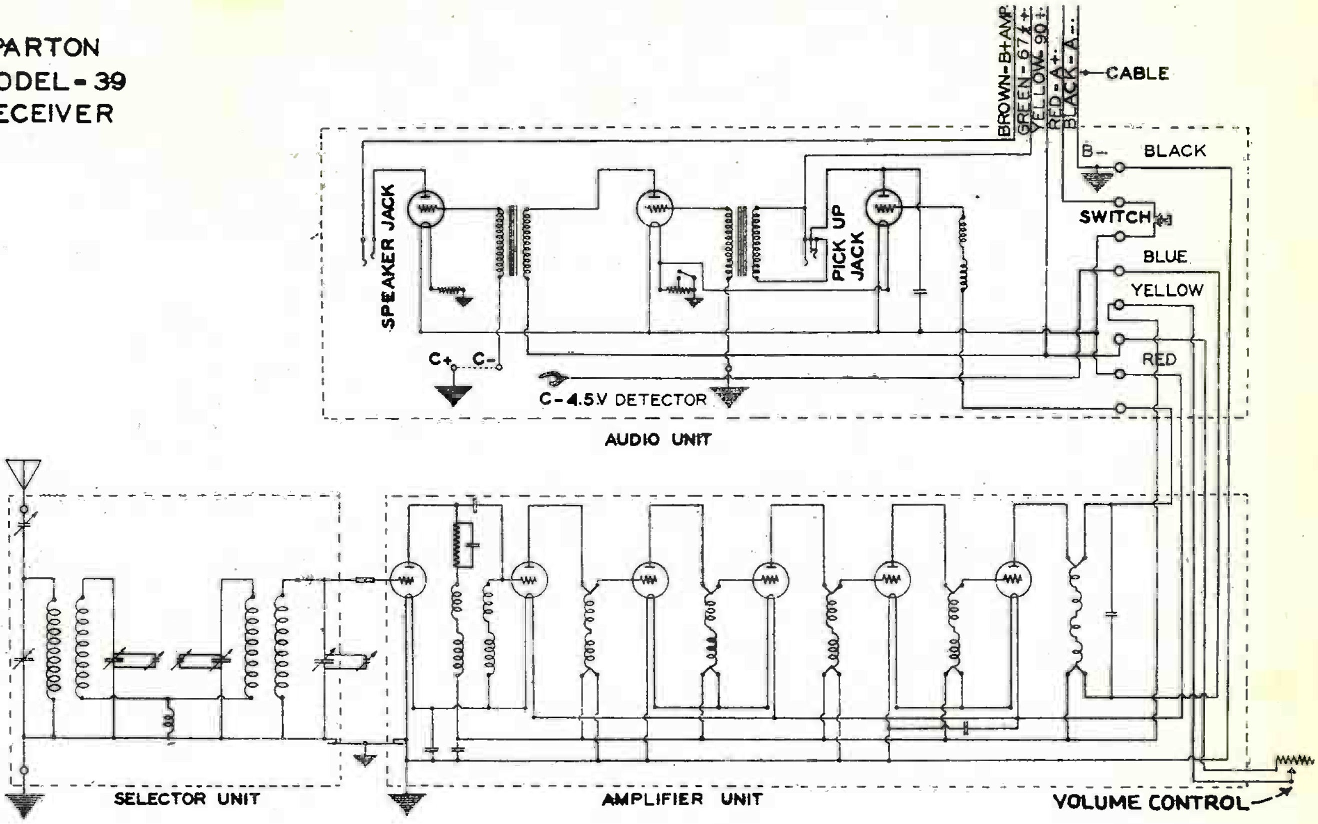

Schematic Drawing of the Sparton Equasonne Circuit

SPARTON
RECEIVER
MODEL-89A

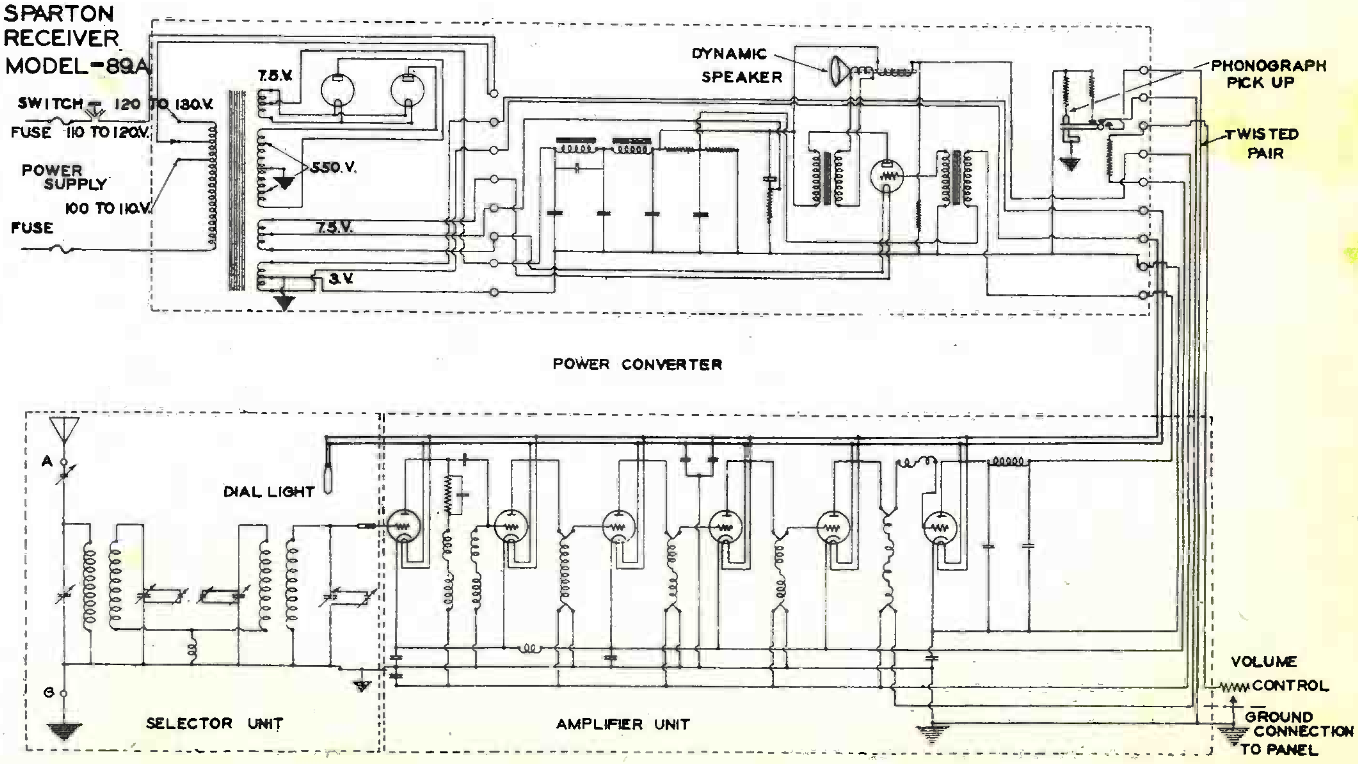

SPARKS-WITHINGTON CO.

Schematic Drawing of Sparton Equasonne Receiver, Model 9-30

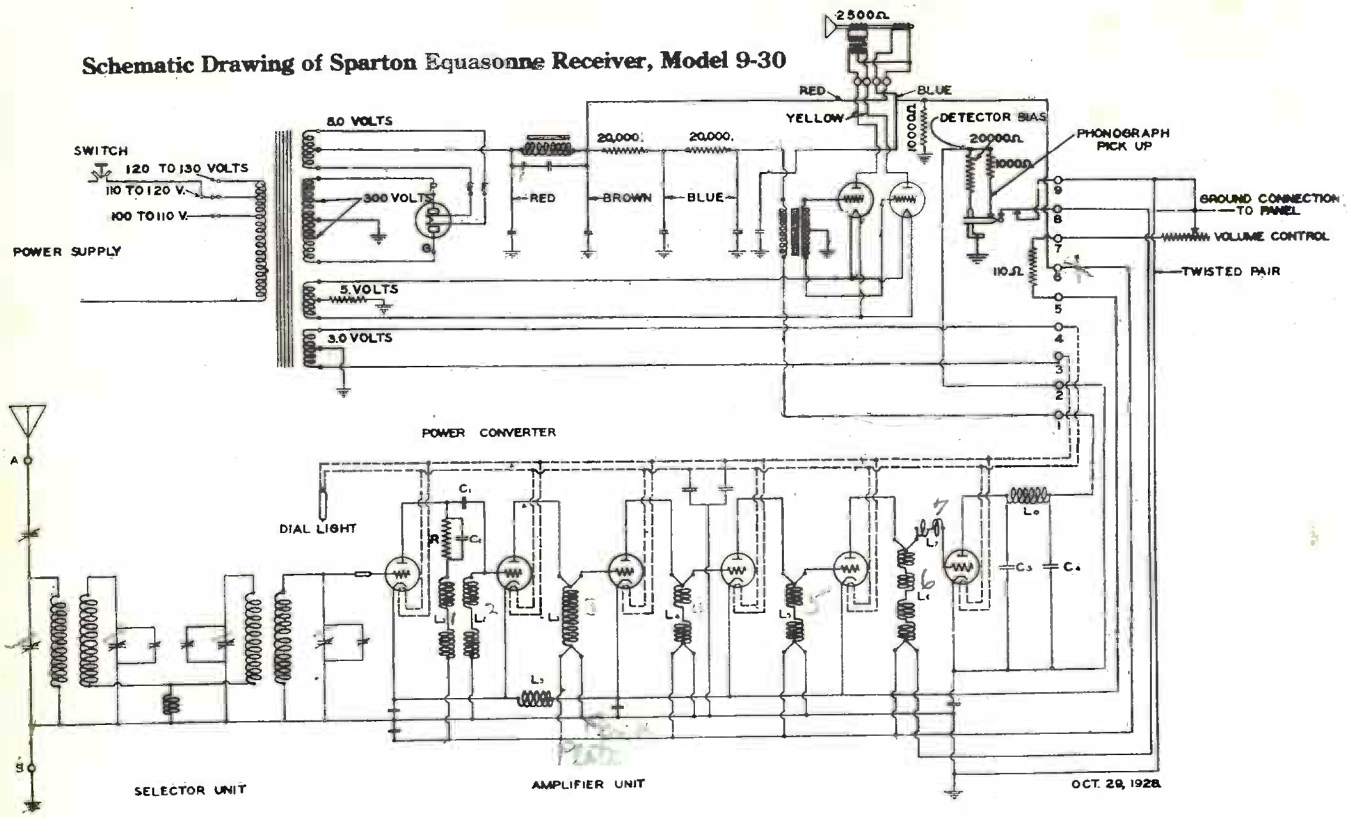

Schematic Drawing of Sparton Equasonne Receiver Model 49

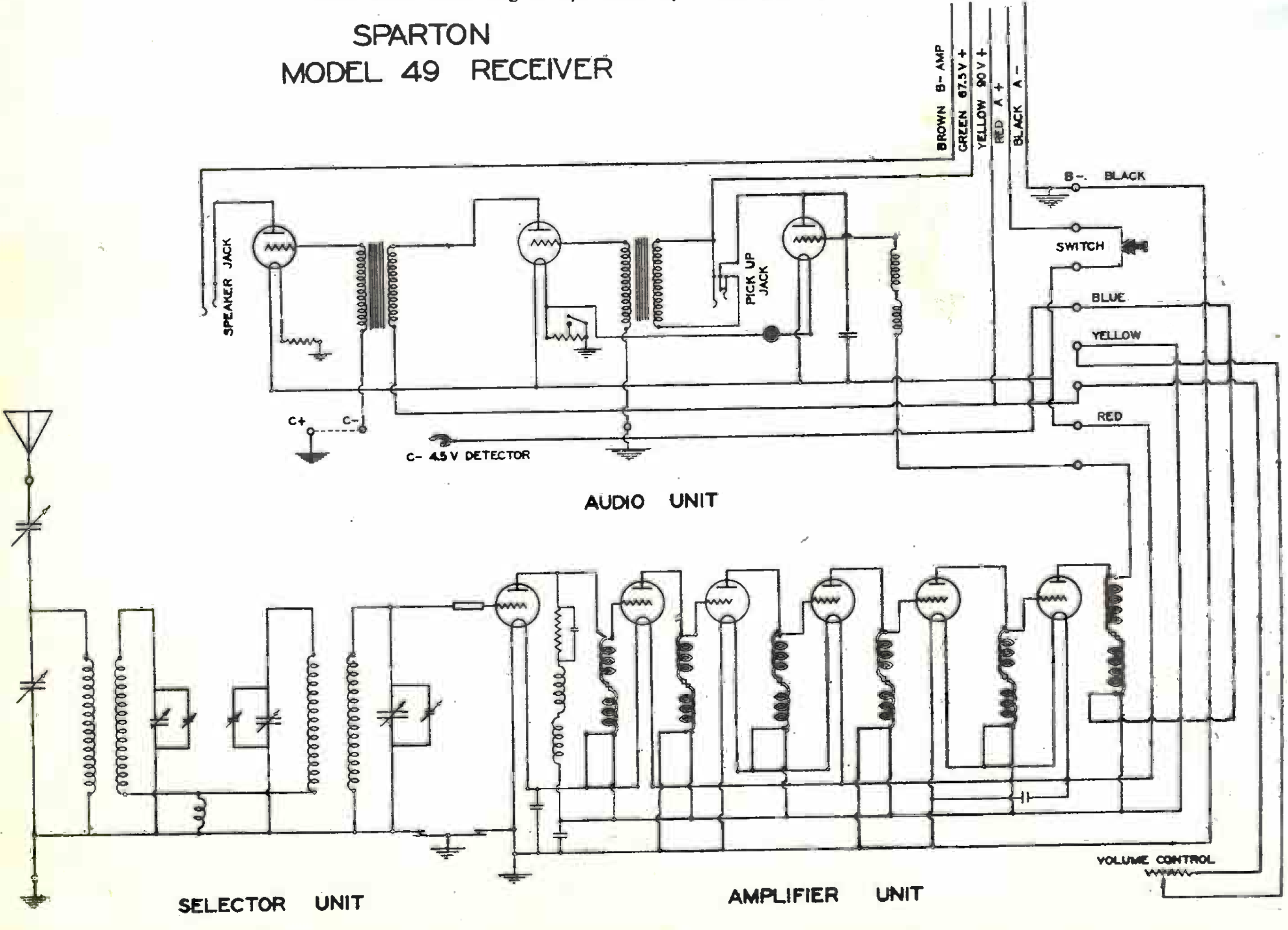

Radio Service Data Sheet

SPARTON "EQUASONNE" MODELS 931 AND 301 D.C.

Although grounds are shown in the schematic circuit of this set, no ground should be connected to this set. The reason is that one side of the D.C. line is grounded at the power house; consequently, if, for example, with the line-plug connections reversed the set should be connected to an external ground in any manner a short-circuit would result. In some D.C. sets fixed condensers will be found in both ground and antenna leads; in this receiver accidental grounding of the antenna (which usually results, when the lead-in insulation of a poorly installed aerial is rubbed, through permitting the lead to touch metal on the building) is prevented by the antenna condenser shown. An additional safety factor in the D.C. "Equasonne" is a 3-amp. fuse in the negative side of the line.

All tuning is obtained before the input of V1, a band-selector circuit being used to secure the desired selectivity. The signal is then amplified successively by V1, V2, V3, V4 and V5 (V6 is the "power" detector); the signal transfer being made through "aperiodic" (broadly-resonant) R.F. transformers. In series with a special R.F. coil arrangement in the plate circuit of V1 is a 2,800-ohm resistor, shunted by a fixed condenser of very small capacity.

The bank of three 15-ohm resistors in series with the reproducer's field coil limits the current consumption to approximately the correct amount; more accurate adjustment for high- or low-line supply is obtained through the 7-ohm resistor which is controlled by the shorting switch marked "Hi-Lo." ("Lo." below 115 volts; "Hi," 115-125 volts.) It has been found that the "110-volt" D.C. supply in some districts may rise to a value of 135 volts; and the remedy in this case is to add to the three-resistor bank a fourth resistor, also of 15 ohms.

The Service Man is recommended to check first the 15-ohm resistors in the 45-ohm bank. There is no other outstanding point for test, in the event of trouble, in this set; the dynamic reproducer requires usually no attention.

The volume control in this receiver has a resistance of 50,000 ohms.

A few cautions must be observed with regard to the filament circuit of this receiver. If the pilot light should burn out, replace it at once; this will bring back to normal the increased voltage across the filaments of the Type-182 (Sparks-Withington Co's.) power tubes V7-V8 (equivalent to the standard '71A). The dial light, with a 63-ohm resistor in series, is shunted across the filaments of the R.F. amplifiers and the power detector V6. Therefore, if the filament of one of the type "484" tubes should burn out, V9 will act as a fuse and also burn out; this should be to the Service Man an indication of the trouble. For this reason, too, tubes should be removed from their sockets only when the set is disconnected from the line, to prevent burning ont V9. (If the heater [filament] of one of the 484s should burn out, the remaining tubes in the series will not light until the circuit is completed through a replacement tube or an equivalent resistor.)

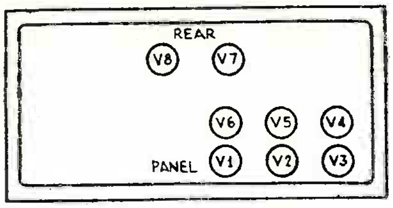

Tube arrangement of the "Equasonne" D.C. models.

As the Sparton tubes carry a 90-day guarantee, the Service Man should acquaint himself with the limitations of this guarantee. The specifications set by the manufacturer for tubes subject to replacement and bearing the proper sticker, dated, are as follows: low amplification; low emission; loose bases; defective welds; unsoldered terminals; gassy; open heaters; one element shorted to another; loose pins; low mutual conductance; no plate current; loose elements; open filament. Tubes having loose tops; broken glass; broken stems; broken bases, or dated outside the time limit cannot be replaced.

An external "C" battery supplies the bias for the power tubes.

V9 may be a 3.8-volt Mazda 13, type G3.

The current in the filament-heater-resistor circuit is approximately 1.5 amperes under correct conditions. All continuity tests of the apparatus should be made with the set off the line.

Absence of plate voltage on the detector V6 may be due to: lack of line voltage; an open R.F. choke CH; open push-pull-input A.F. transformer primary; or a ground in the R.F. amplifier.

Operating voltages for this set are as follows:

Plate voltage, V7 and V8, 115; V6 (volume "on"), 100-108; V1, V2, V3, V4 and V5, (volume "on"), 112.

Grid voltage, V1, V2, V3, V4 and V5 (volume "on"), 2 to 3; V6, 8 to 10; V7 and V8, 22½:

Filament voltage, V1, V2, V3, V4, V5 and V6, (across the six tubes in series) 18; V7 and V8 (across the two tubes in parallel), 4 to 4.5.

For reference, the characteristics of Sparton tubes are given in the accompanying table: in which SN is the Sparton tube-type designation; FV, filament volts; FA, filament amps.; GV, grid volts; PV, plate volts; PMa, plate milliamps.; PR, plate resistance; Mu, amplification factor.

SN	FV	FA	GV	PV.	PMa	PR	Mu
484	3.0	1.25	3	90	6.0	16,000	12.5
585	7.5	1.25	45	250	55.0	2,000	3.8
182B	5.0	1.25	29	200	18.0	2,400	
181	3.0	1.40	29	200	12.0	1,500	
401	3.0	1.40	3	90	6.0	7,000	
226	1.5	1.05	3	90	6.0	7,000	
227	2.5	1.75	9	135	6.0	9,000	.0
686	3.0	1.25	3	90	....	2,000	3.8
182	5.0	0.90	45	200	18.0	2,000	3.0

The Sparton tubes numbered 171, 373, and 201A have been discontinued. The 401 is a "side-heater" tube similar to the Kellogg tube of the same characteristics. The 585 has a wire mesh plate, the 686, also a high-power tube, has a solid plate. The 182 has a slightly larger output than the standard '71A. The 484 is a hi-mu tube with a 3-volt filament. The 182B is a special 5-volt tube with slightly higher output than the standard '45. Type 280 and 281 tubes are similar to the standard '80 and 81.

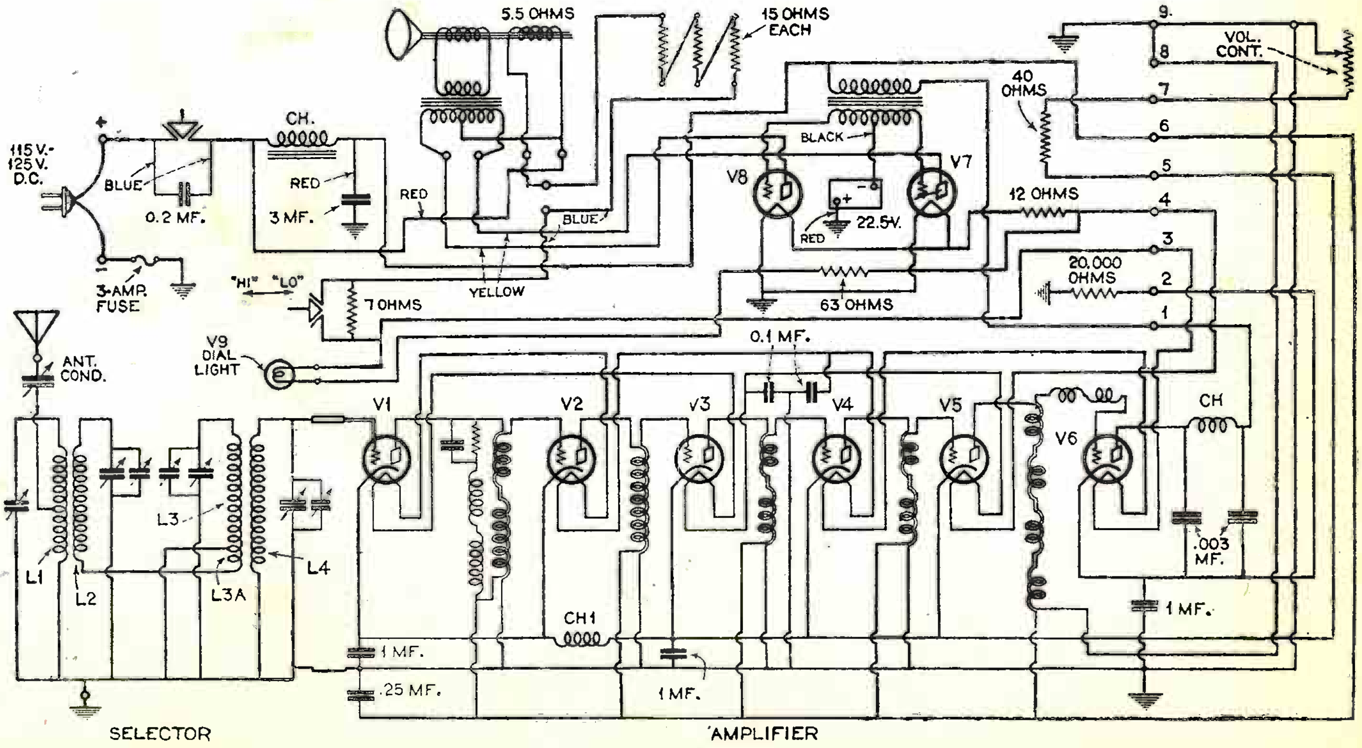

SPARKS-WITHINGTON CO.

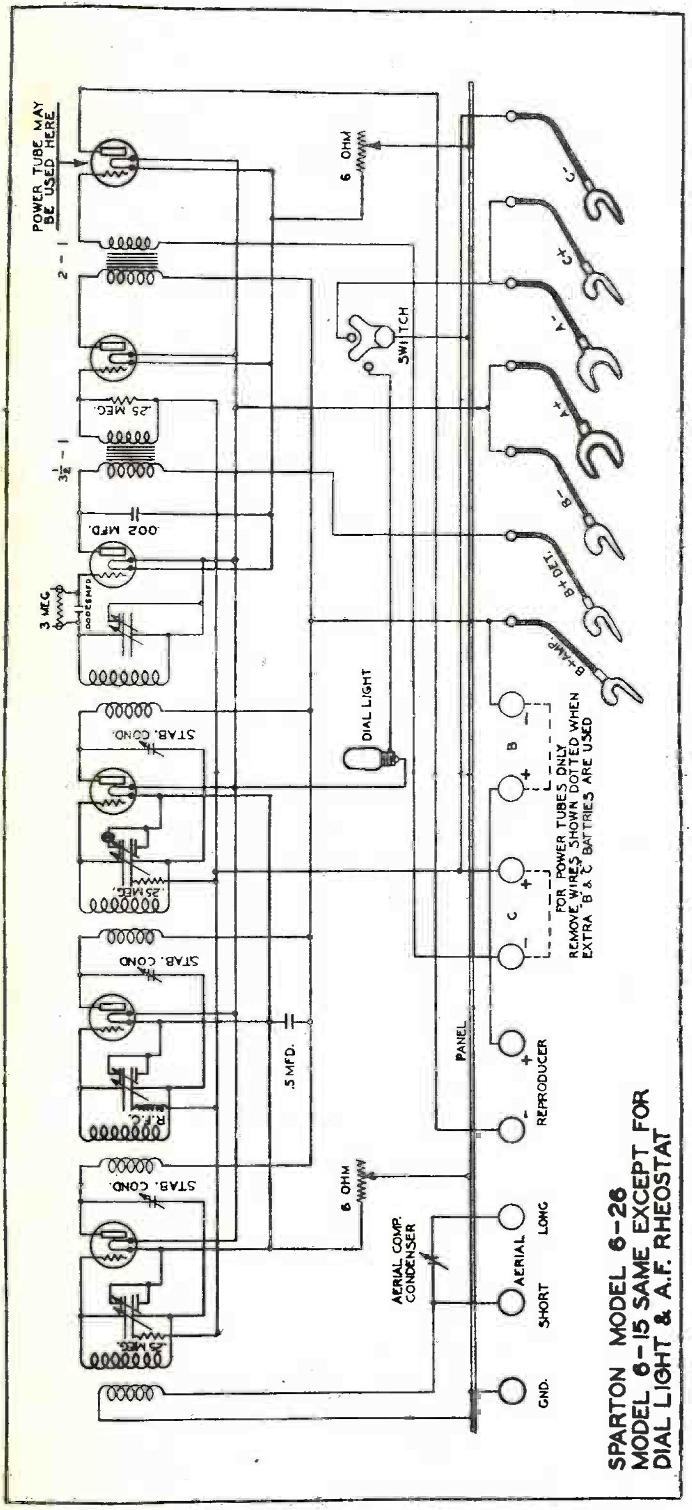

SPARTON MODEL 6-26
MODEL 6-15 SAME EXCEPT FOR
DIAL LIGHT & A.F. RHEOSTAT

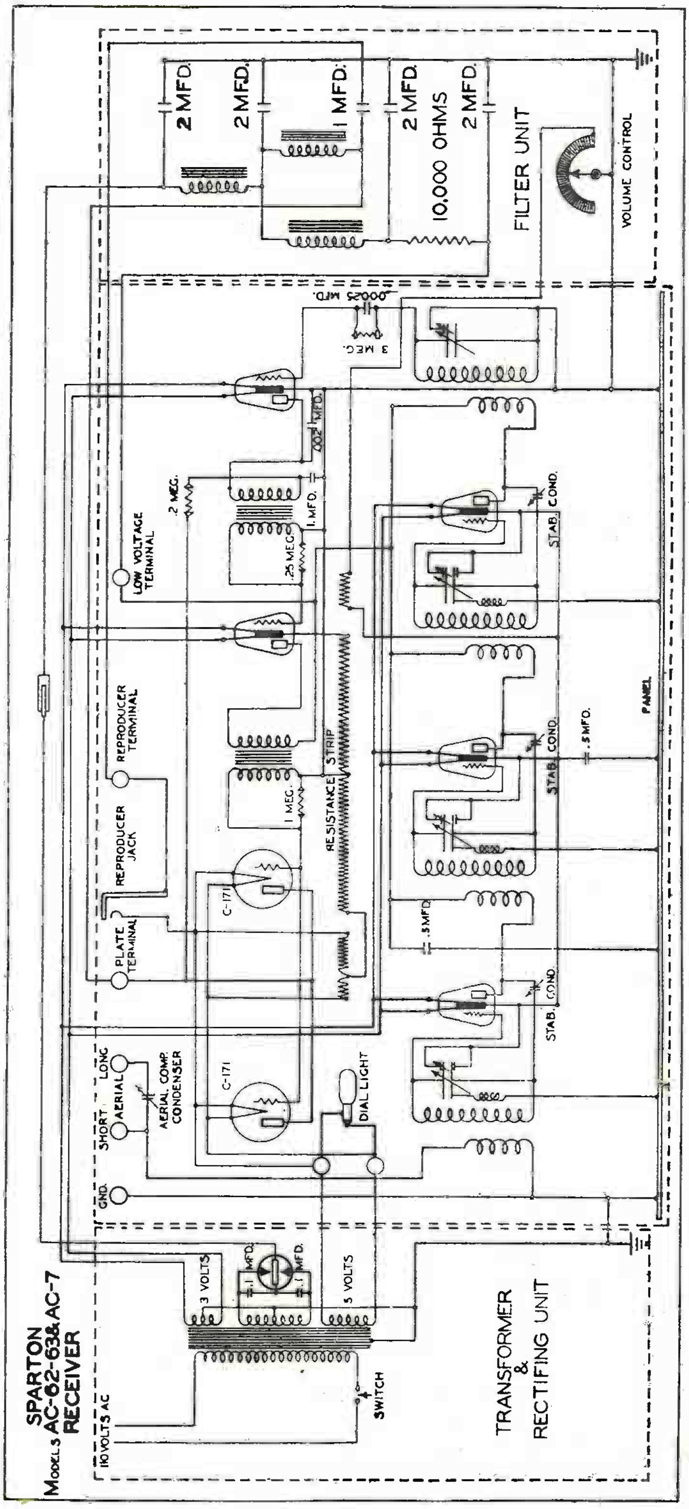

SPARTON
MODELS AC-62-63 & AC-7
RECEIVER

SPARKS-WITHINGTON CO.

Schematic Drawing of the Sparton Equasonne Circuit

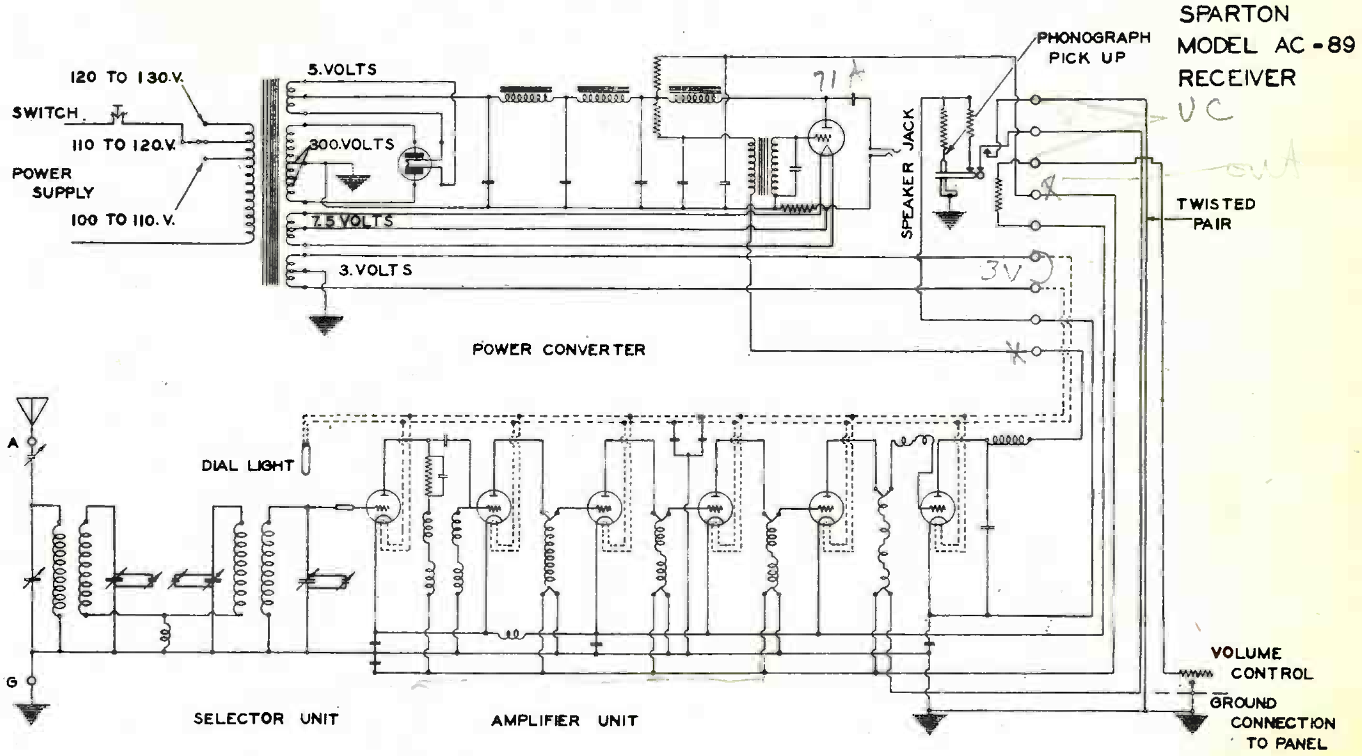

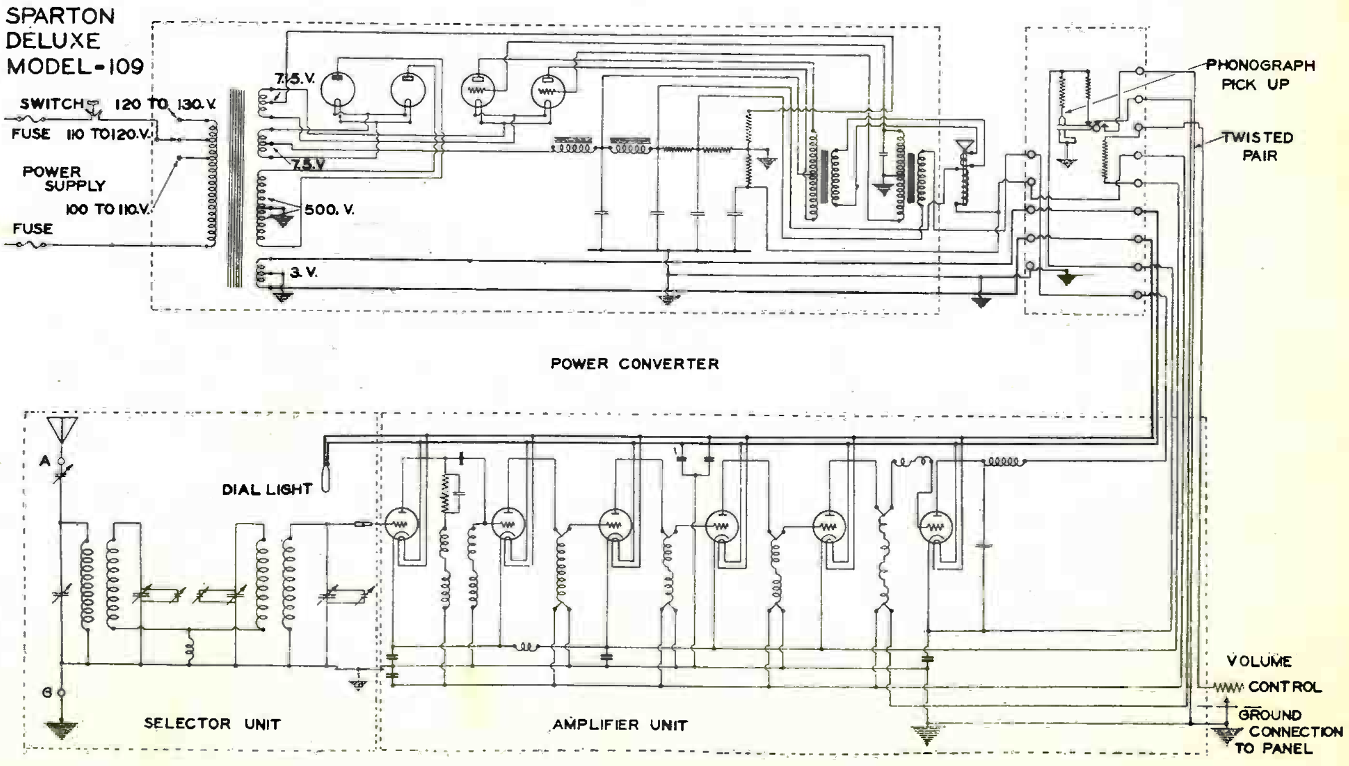

SPARKS-WITHINGTON CO.

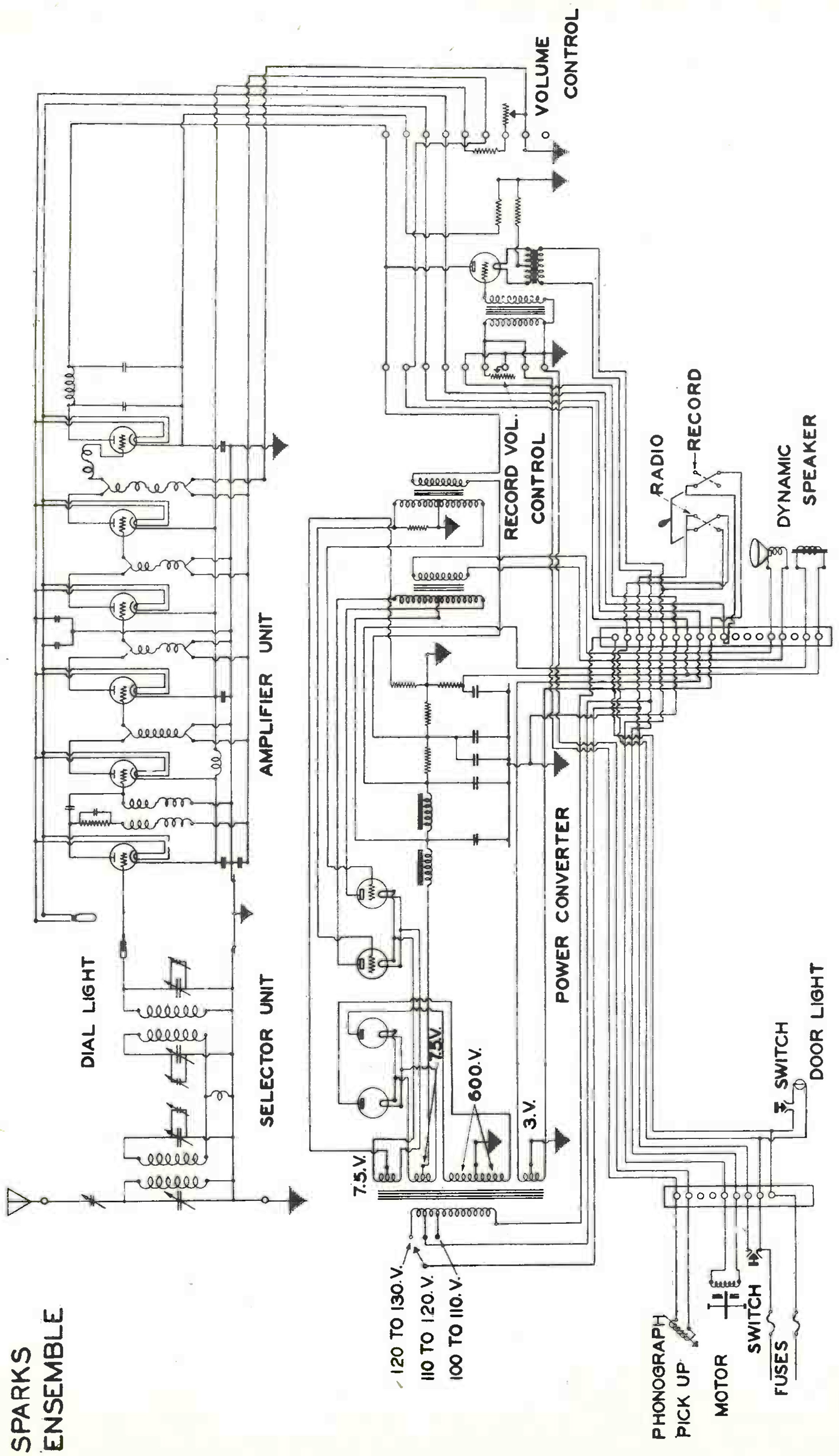

Schematic Drawing of the Sparks Ensemble

SPARKS
ENSEMBLE

SPARKS-WITHINGTON CO.

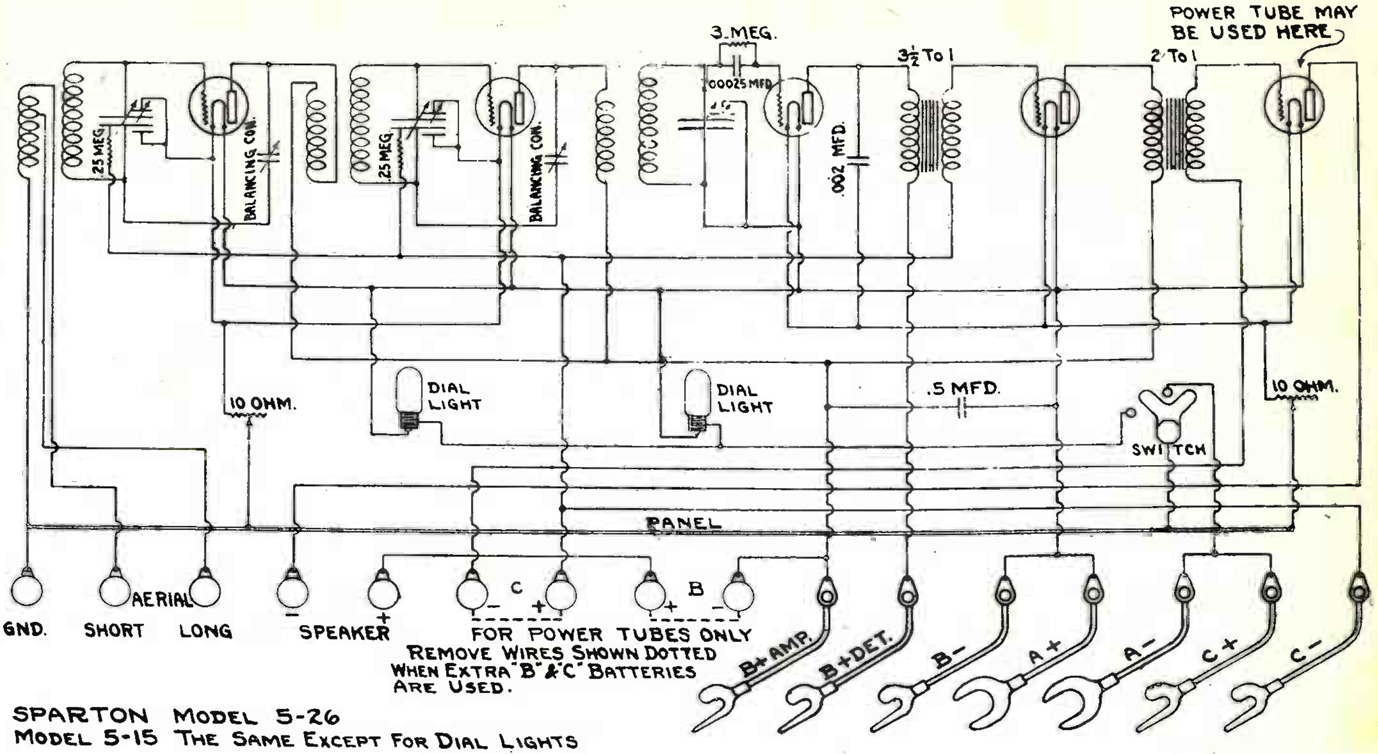

SPARTON MODEL 5-26
MODEL 5-15 THE SAME EXCEPT FOR DIAL LIGHTS

Schematic Drawing Sparton Equasonne Receivers Model 110

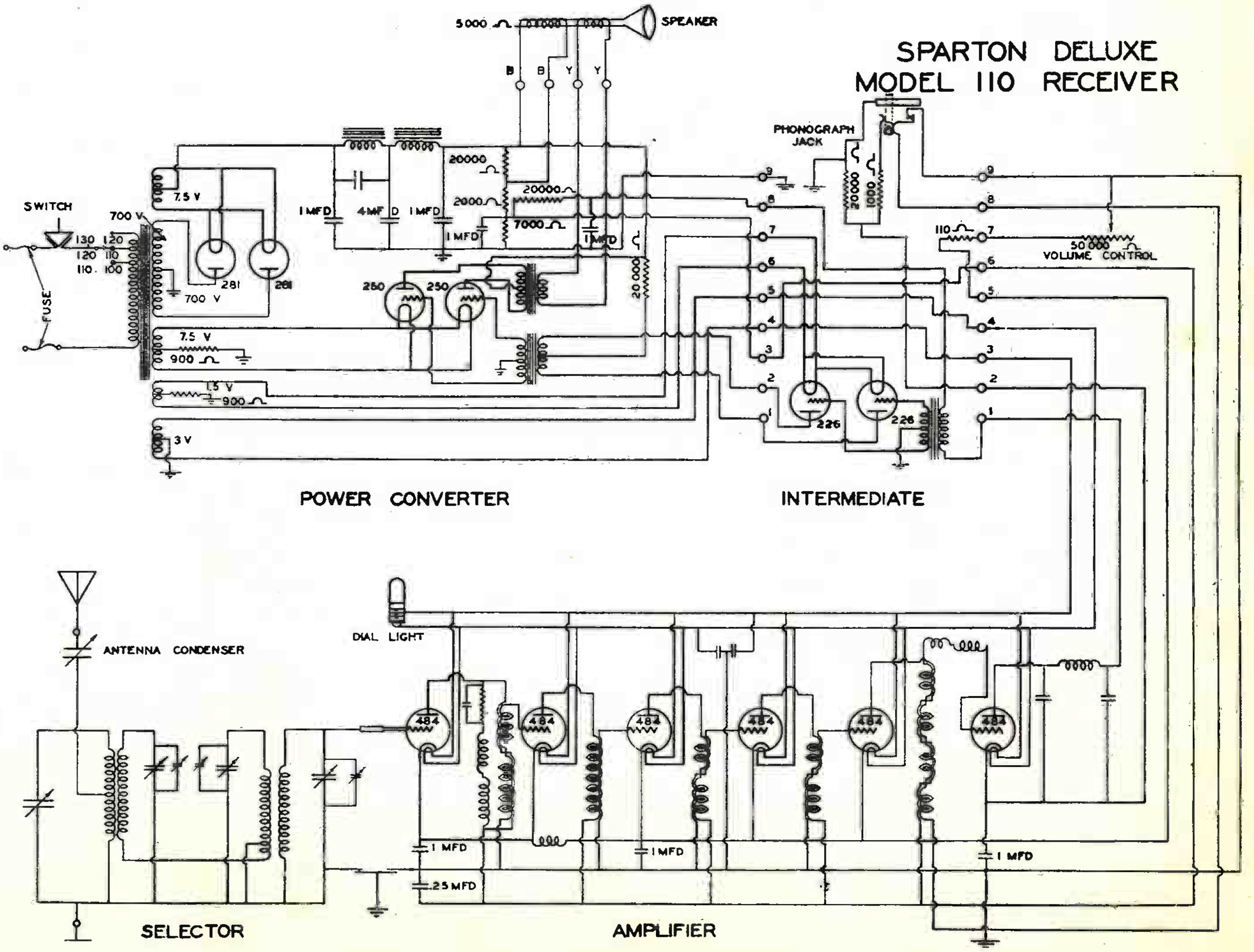

Radio Service Data Sheet

STEINITE 50-A AND 102-A

On the terminal strip of this receiver are mounted: the power-cable lugs; the grid leak and condenser; the detector-plate by-pass condenser; the two center-tap resistors; and the 600-ohm and 2500-ohm "C-bias" resistors.

A special input circuit is used on the Steinite receivers, for the purpose of obtaining sensitivity. The circuit acts as an autotransformer when the antenna lead is connected at the junction between L1 and C1. The purpose of R1 is to complete the D.C. path for the grid bias.

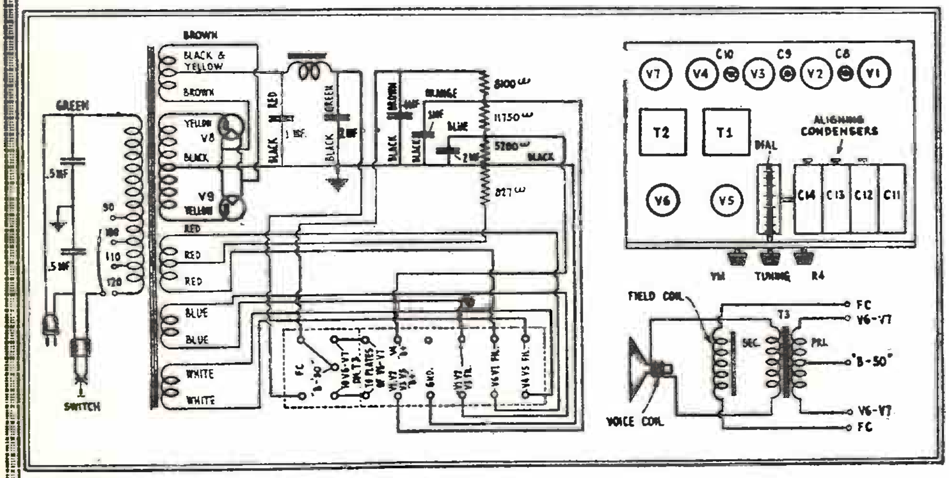

Power-pack parts layout and reproducer connections of the Steinite "50-A" and "102-A."

Each unit of the four-gang condenser has a capacity of 380 mmf., maximum, and 30 mmf., minimum. The secondaries L3, L6, L9 consist each of 87¾ turns of No. 30 enameled wire on a tube 1¼-inch in diameter. They are connected in series with the balancing coils (L4, L7, L10) which are wound with 32 turns of the same size wire; they are placed at the low-potential ends of the secondary coils, and in non-inductive relation. The primary coil, placed inside the main secondary, consists of 24 turns of space-wound No. 38 advance wire.

When the volume control R4 is turned entirely "on" in a clockwise direction the bias on the R.F. stages is normal (600 ohms in the cathode leads); turning this control to its maximum counterclockwise position cuts in 75,000 ohms additional. The resulting biasing potential is sufficient to reduce the plate current to nil; and even powerful local signals are cut out.

The output transformer matching V6 and V7 to the moving coil of the dynamic reproducer is built into the reproducer. The primary winding has a resistance of 285 ohms between center tap and each end. The secondary winding matches the low-resistance voice-coil.

The power pack of this receiver is built on the unit plan; whereby, if one unit is defective, it can be easily removed and another substituted in its place. Some difficulty may be experienced in removing the chassis from the Model 102 unless the following procedure is followed. First, remove the two screws with which the "Radio-Phono" escutcheon is held in place. Sufficient slack has been provided in the leads so that it is possible to raise the escutcheon assembly, turn it on edge and pass it down through the hole into which it fits, permitting its removal as an integral part of the receiver chassis. Second, no attempt should be made to remove the receiver chassis from the shelf to which it is attached until the shelf has been removed from the cabinet. The shelf with chassis attached can be readily removed by withdrawing the four screws which secure it to the cabinet, permitting the entire assembly to be pulled out from the back of the cabinet and making easy access to the six bolts which secure the chassis to its supporting-shelf.

If the volume control does not function, consideration of the schematic circuit indicates that the trouble may be due to a shorted C2 or C3.

If the transformer's filament windings for V4-V5 V8-V9 are making contact or flashing over, resistor R2 (situated under the terminal strip and colored red) will be burnt out and consequently show an open circuit, or no "C" voltage on the grid of V5. The remedy for this condition is to remove the transformer from the power pack and substitute another. Only early models should require this repair.

The phonograph turntable should rotate at the standard speed of 78 r.p.m.

Any hum which may develop is ordinarily traceable to the detector; particular care taken in the selection of a detector tube when first setting up the receiver will result in best operation over an extended period.

Variation from the standard circuit to include connections for the phonograph-radio switching arrangement on the 102-A is illustrated; the schematic is laid out to correspond with the view of the switch escutcheon, which is a rear one.

The aligning condensers of this receiver, shown in the parts layout, are not shown in the schematic circuit.

Line voltage tap colors of pack are: red, 90; white, 100; blue, 110; green, 120.

The average voltage readings (as shown by a standard set analyzer) for the 50-A and 102-A are given in the table which follows:

Readings of Tester with Test Plug in Socket of Set

		Tube out of Tester (Volts)		*Tube in Tester (Volts)*				
Tube No.	*Tube Type*	*"A"*	*"B"*	*"A"*	*"B"*	*"C"*	*Normal*	*Grid Test*
							Milliamperes	
V1	'27	2.75	134	2.45	125	6.5	4.25	13.0
V2	'27	2.75	134	2.45	125	8.7	5.0	14.0
V3	'27	2.75	134	2.45	125	8.7	4.8	13.6
V4	'27	2.65	92	2.40	32	....	2.5	......
V5	'27	2.65	144	2.40	118	8.2	3.6	9.0
V6	'50	7.7	355	7.40	310	51.0	36.0	98.0
V7	'50	7.7	355	7.40	310	51.0	36.0	98.0

These values were determined with a line-voltage of 110 and with the line-voltage tap on the power transformer set at 110 V. (Volume Control position "Max.")

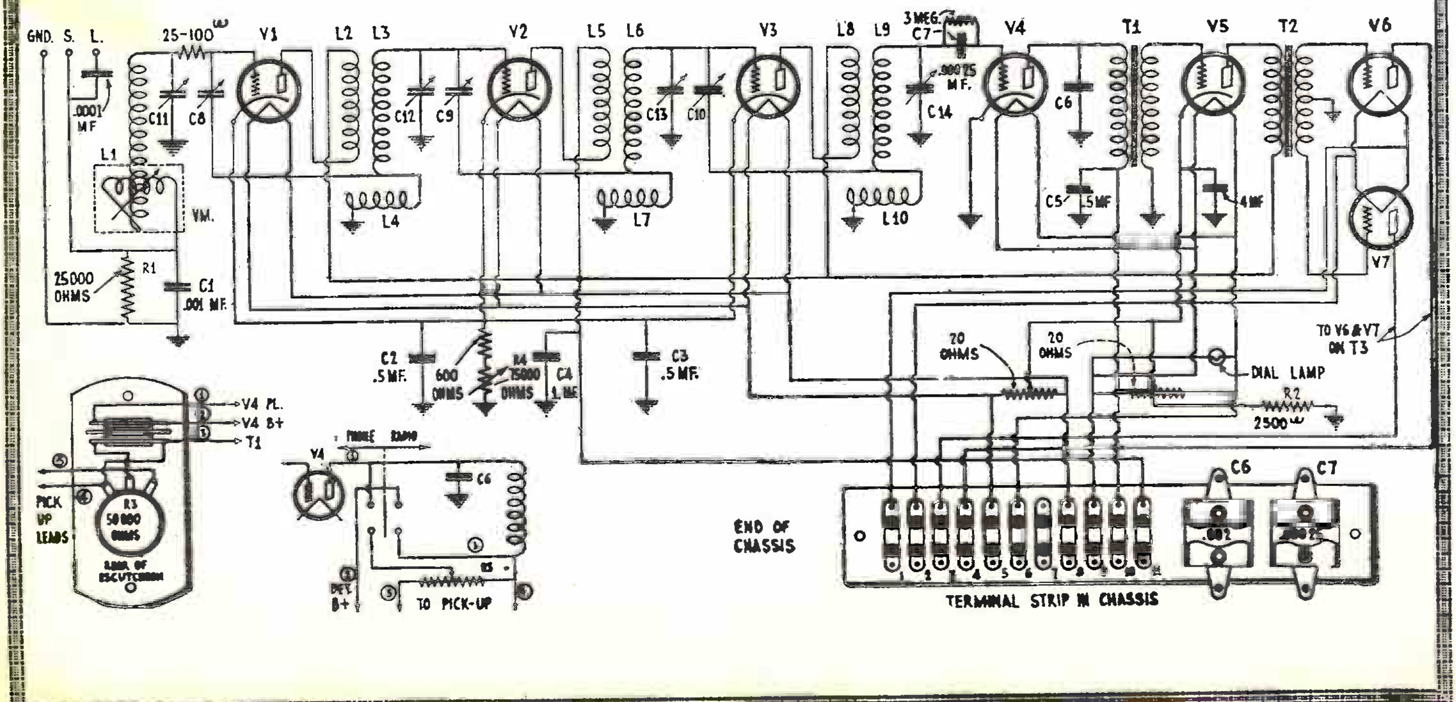

STEINITE RADIO CO.

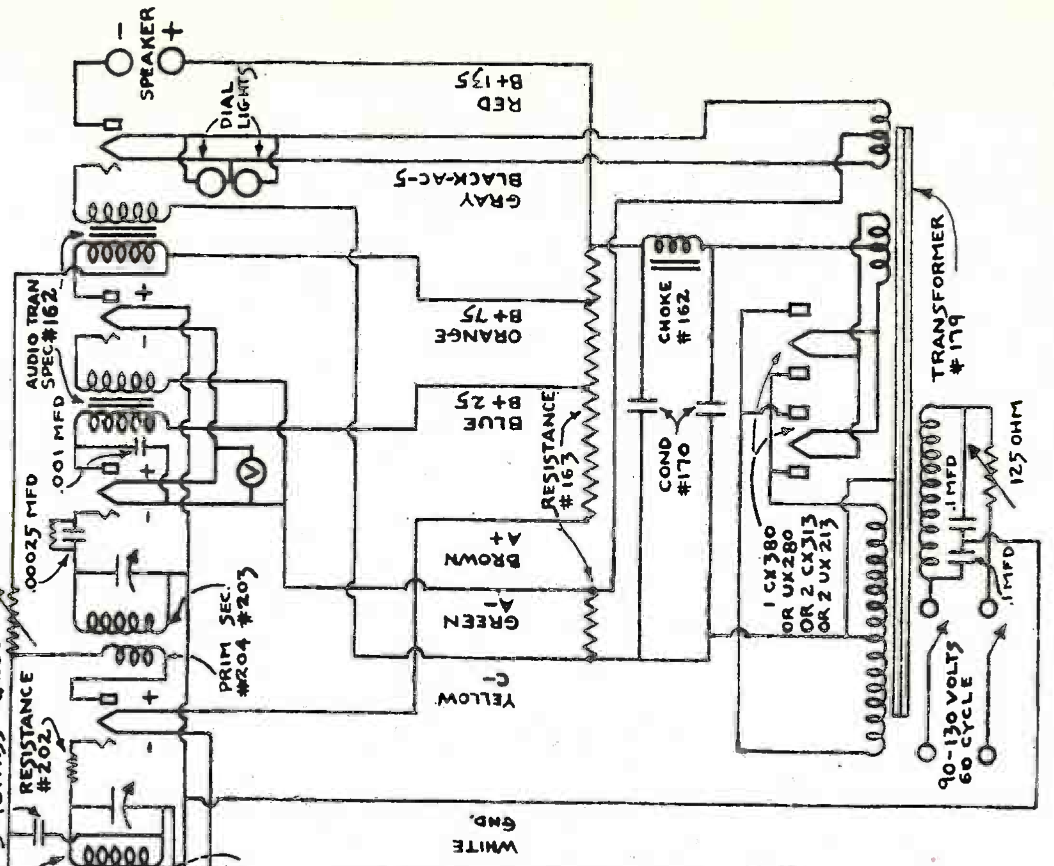

SCHEMATIC DIAGRAM
Models 991-992-993

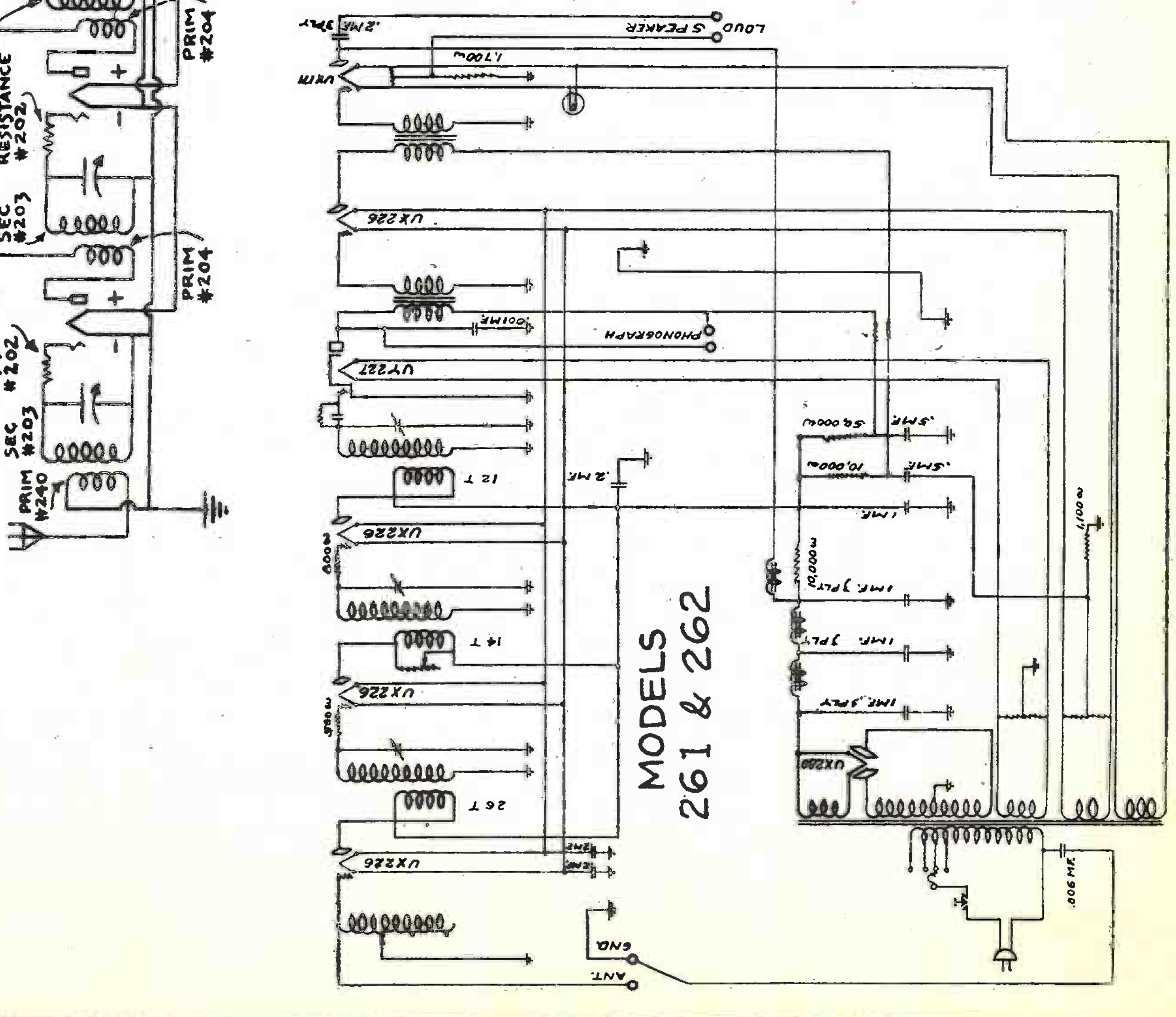

MODELS
261 & 262

STERLING MFG.,CO.

Complete Schematic Diagram of the No. 4 Circuit

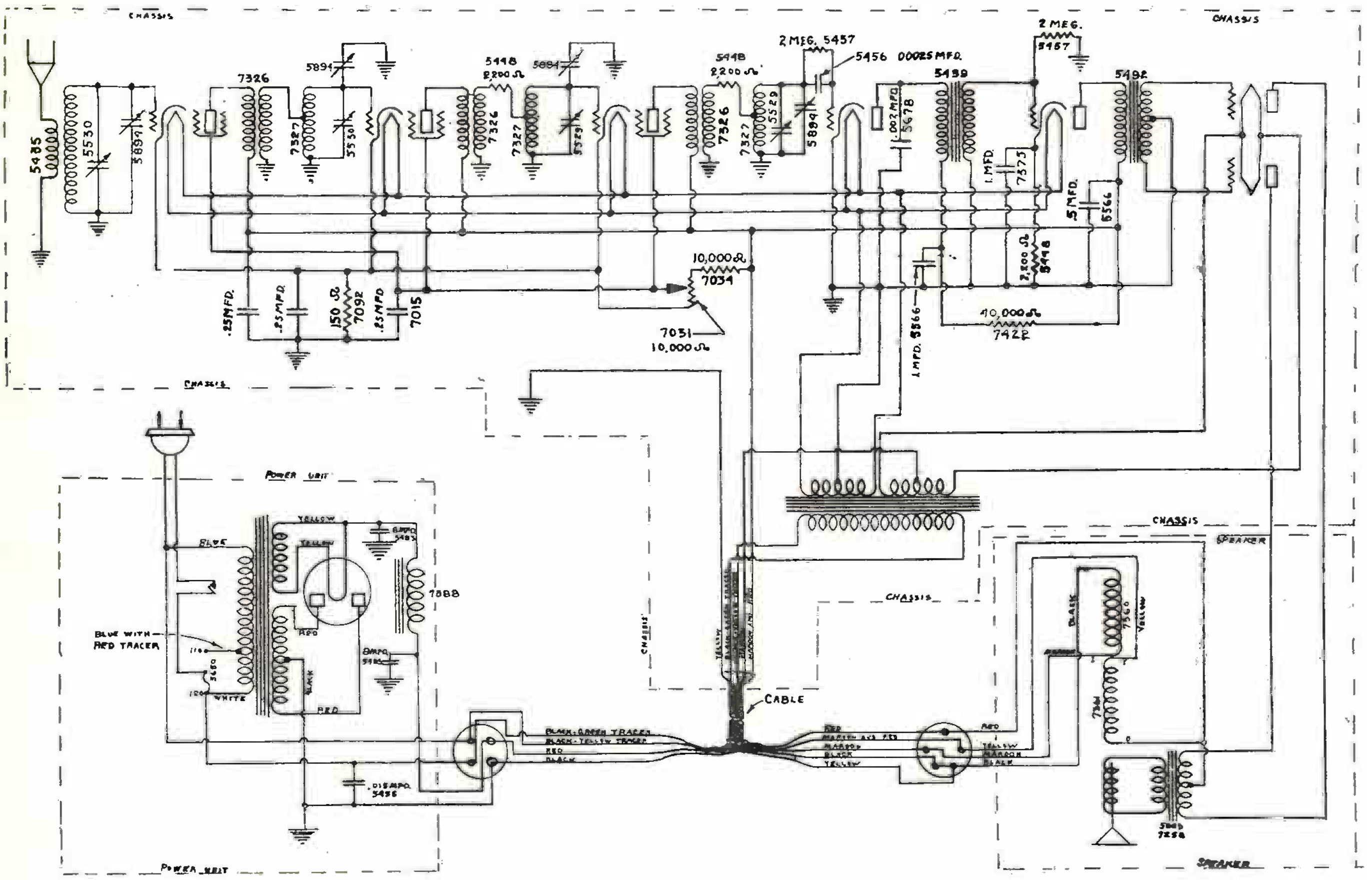

Circuit Diagrams---No. 4 Chassis, Power Unit and Speaker

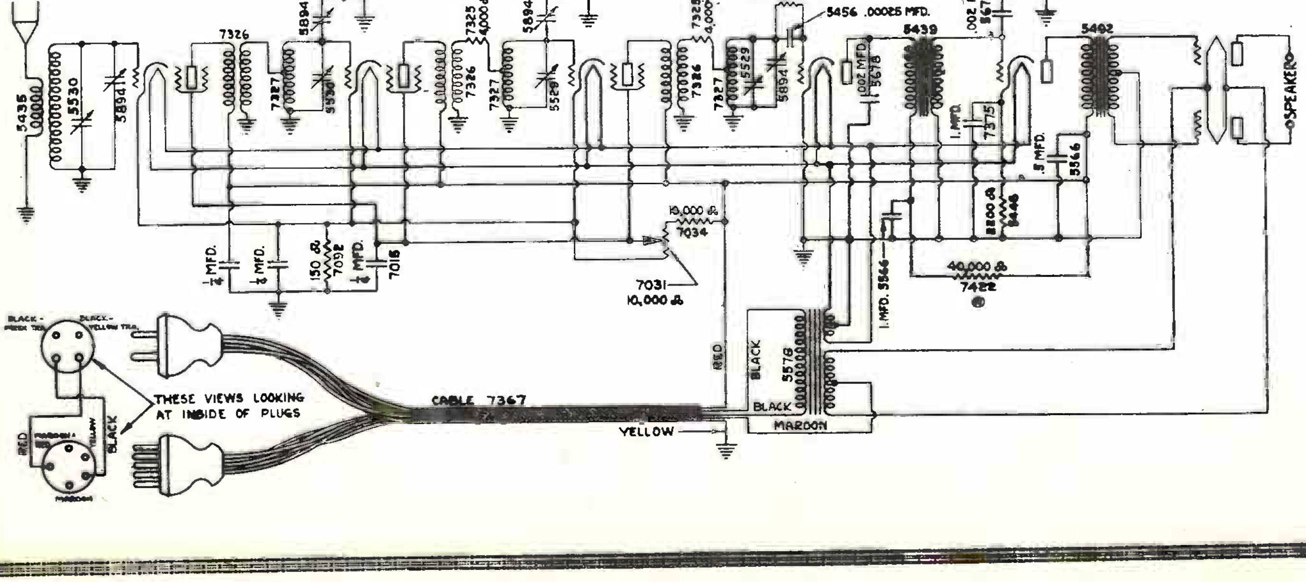

STERLING MFG., CO.

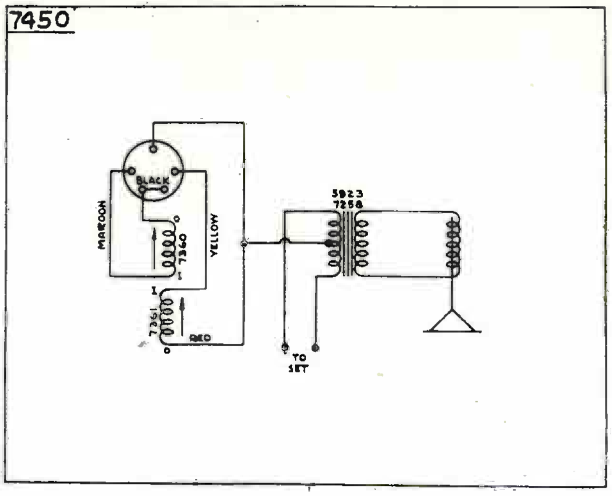

No. 4 Speaker (Part No. 7450)

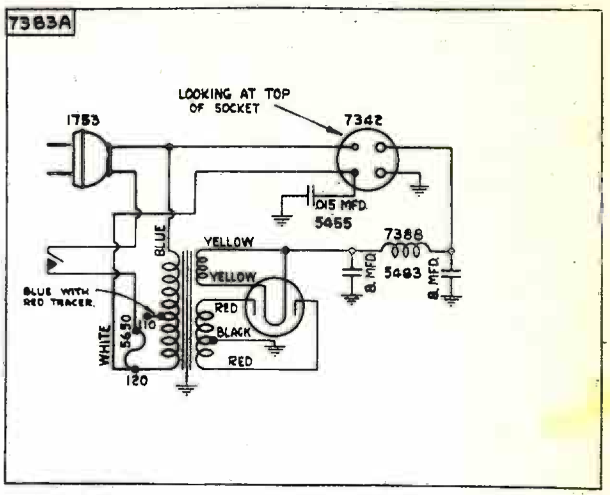

No. 4 Power Unit (Part No. 7383A)

Circuit Diagrams---No. 3A Chassis, Power Unit and Speaker

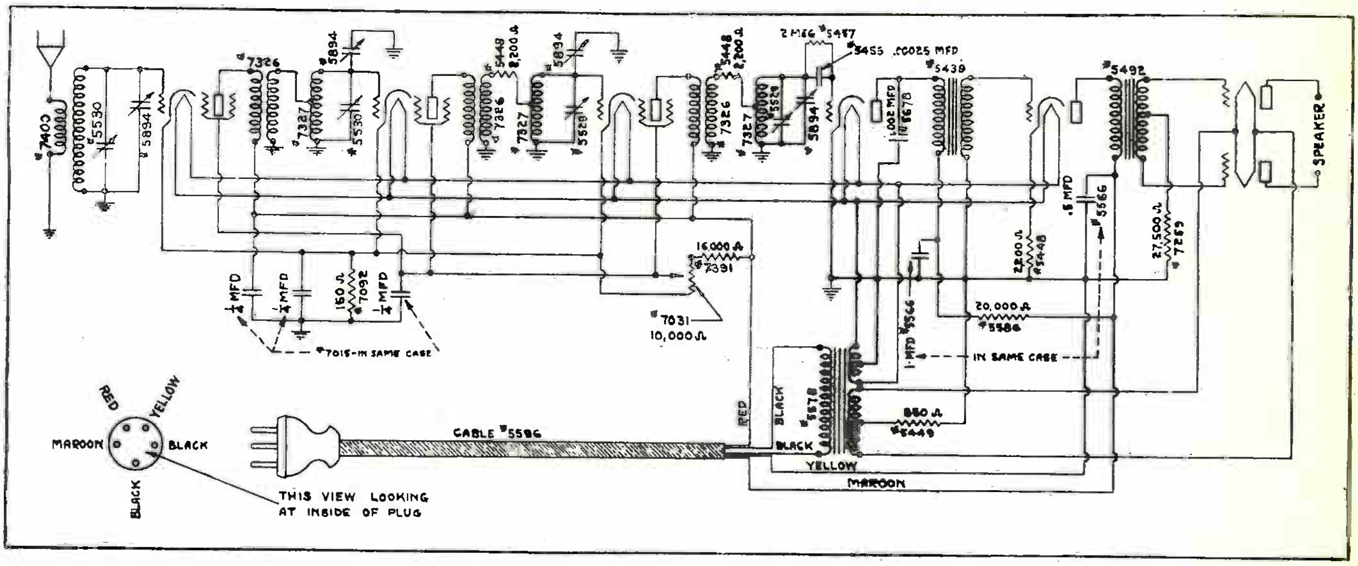

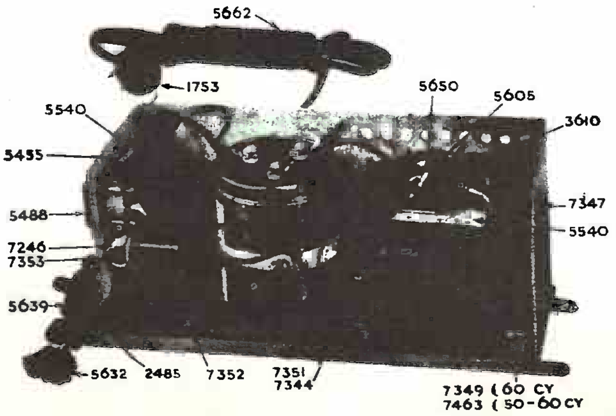

No. 3 Power Unit (Part No. 7348A)

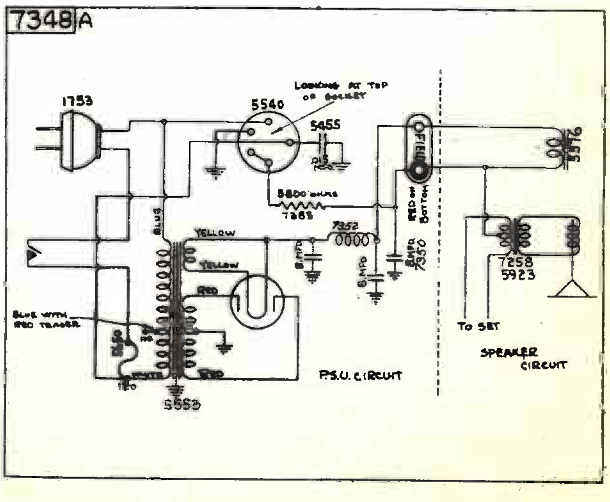

STEWART-WARNER CORP.

Schematic Diagram of Connections for Stewart-Warner One-Dial Control

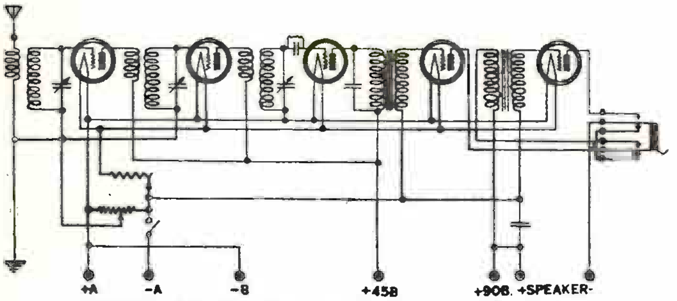

MODEL 305-315-320 WITH "45 VOLT B" ON R.F.

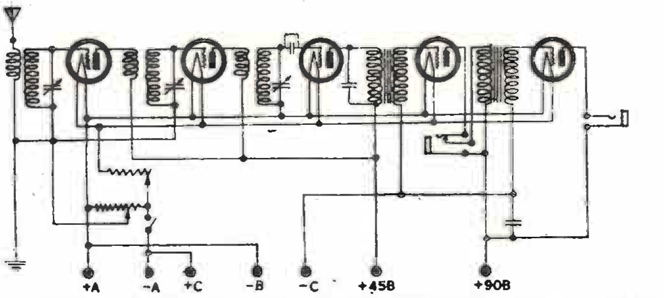

A TYPICAL TUNED R.F. CIRCUIT WITH "C" BATT. CONNECTIONS

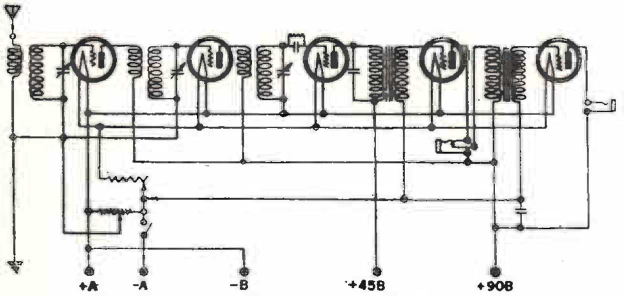

MODEL 305 WITH FRONT PANEL JACKS

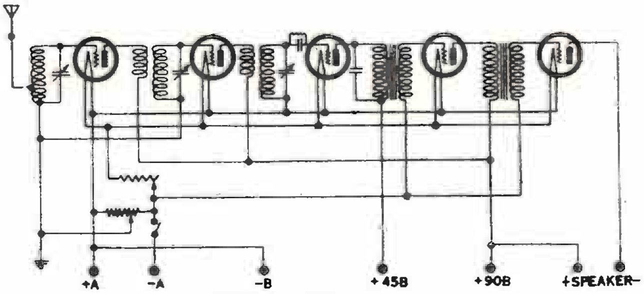

MODEL 300

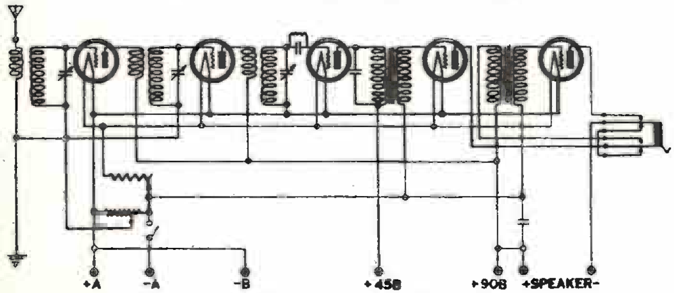

MODEL 305-315-320

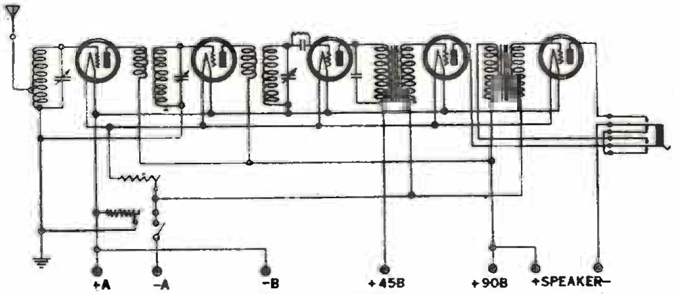

MODEL 310-325

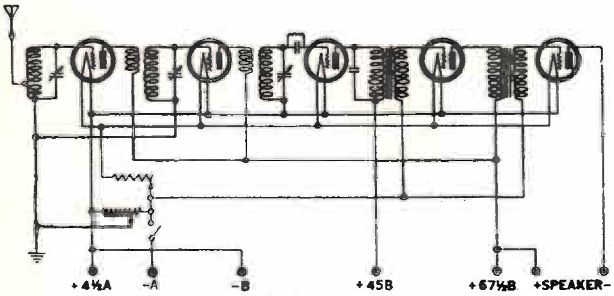

MODEL 330

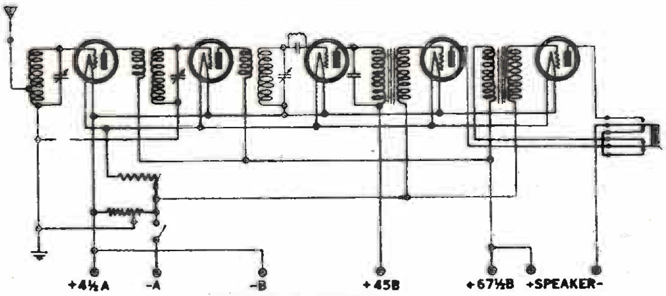

MODEL 335-340

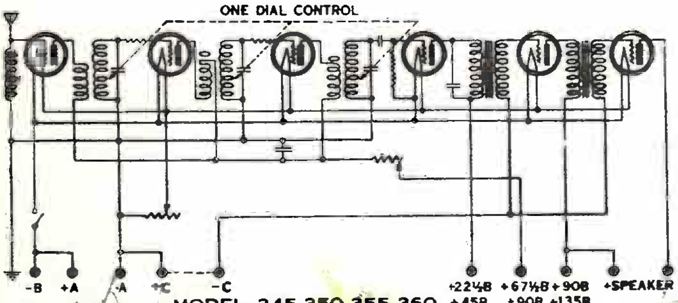

MODEL 345-350-355-360

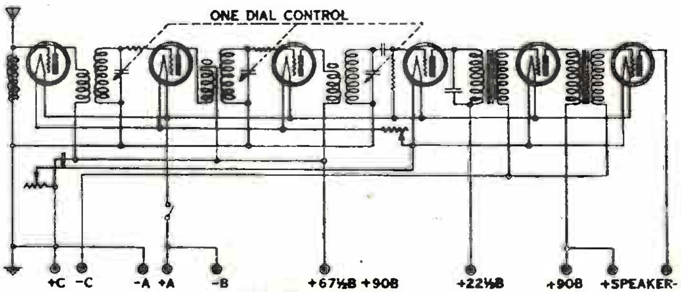

MODEL 385-390

Red

yellow

Black

STEWART-WARNER CORP.

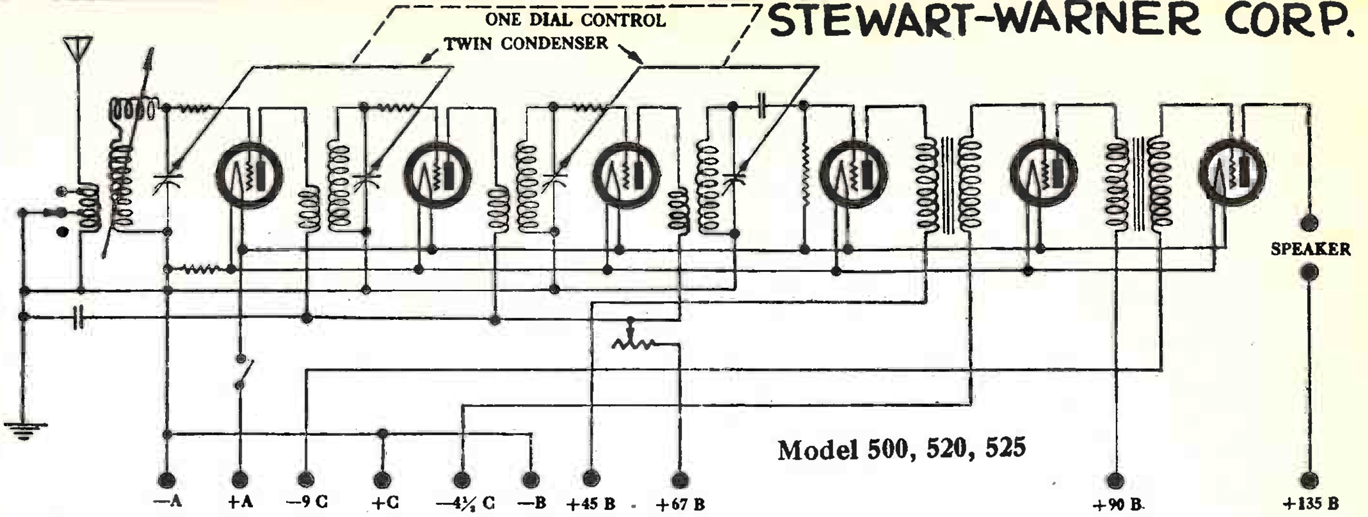

Model 500, 520, 525

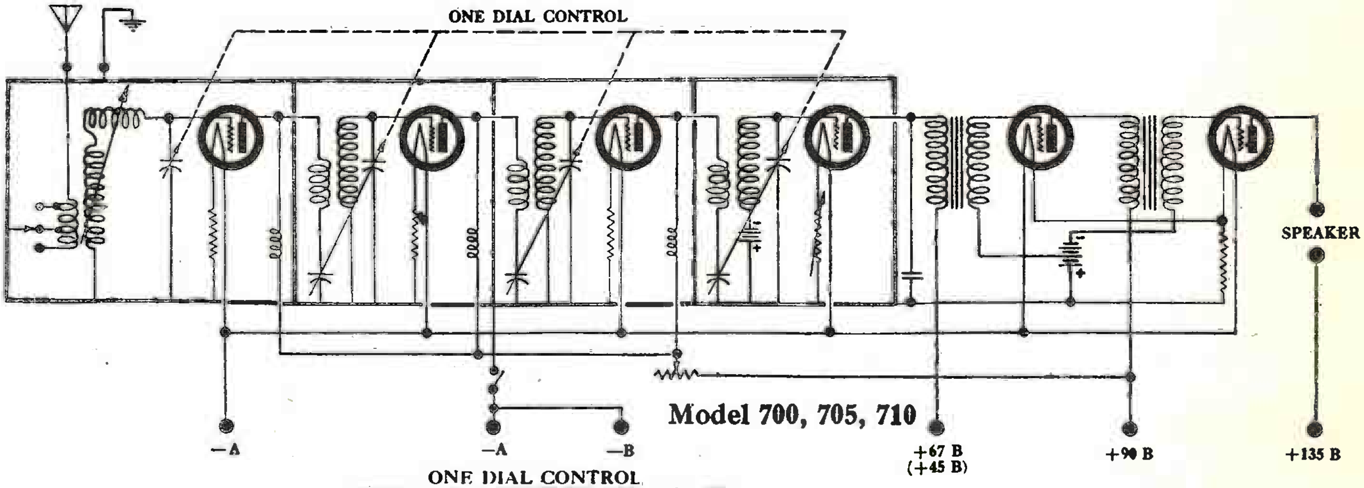

Model 700, 705, 710

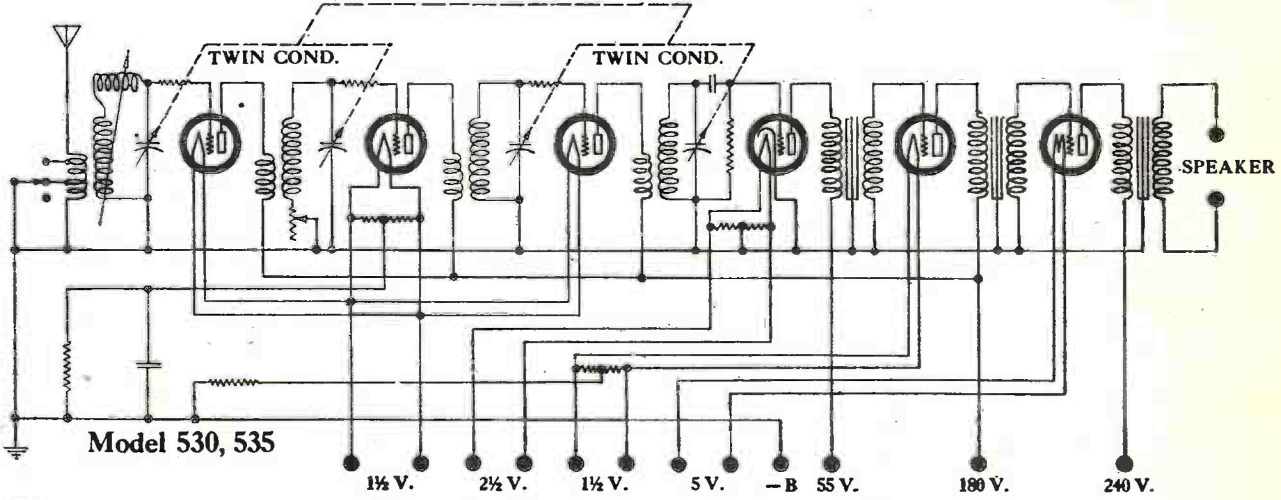

Model 530, 535

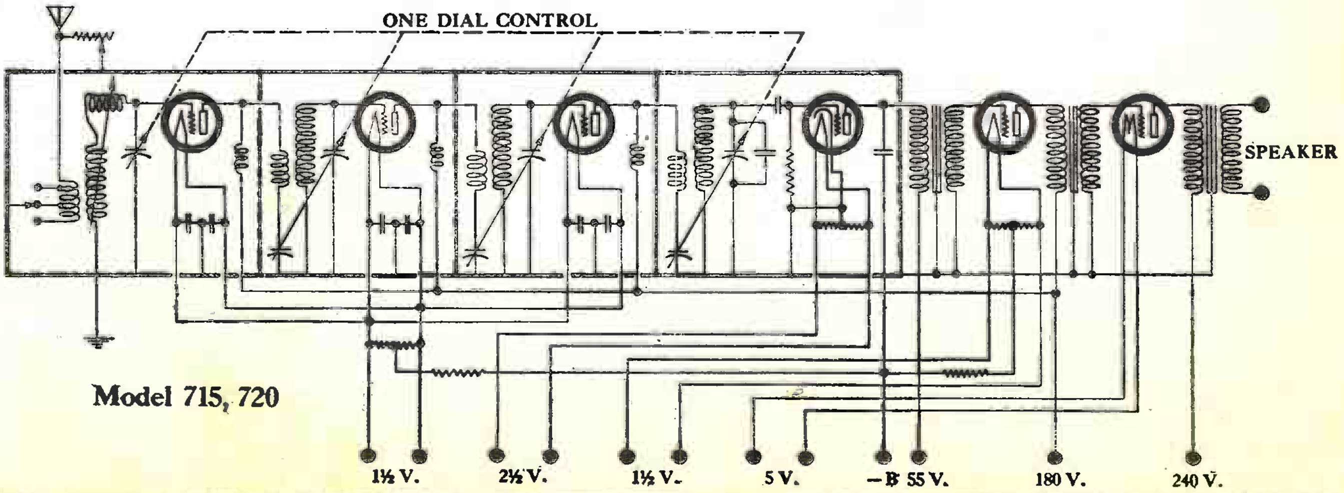

Model 715, 720

STEWART-WARNER CORP.

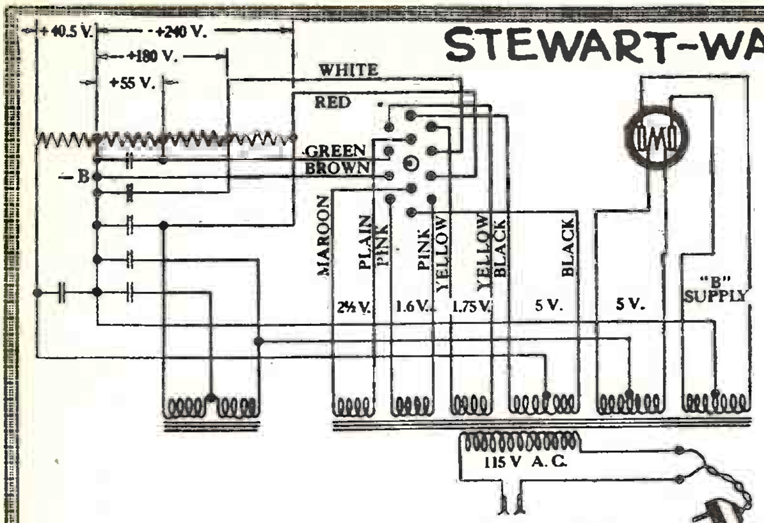

~ POWER UNIT ~
MODELS
530 - 535 - 715 - 720

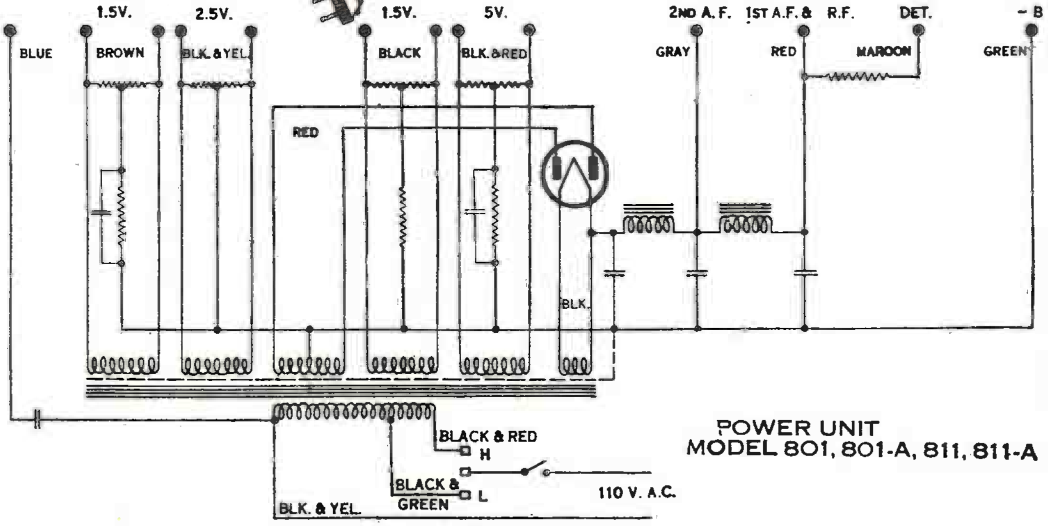

POWER UNIT
MODEL 801, 801-A, 811, 811-A

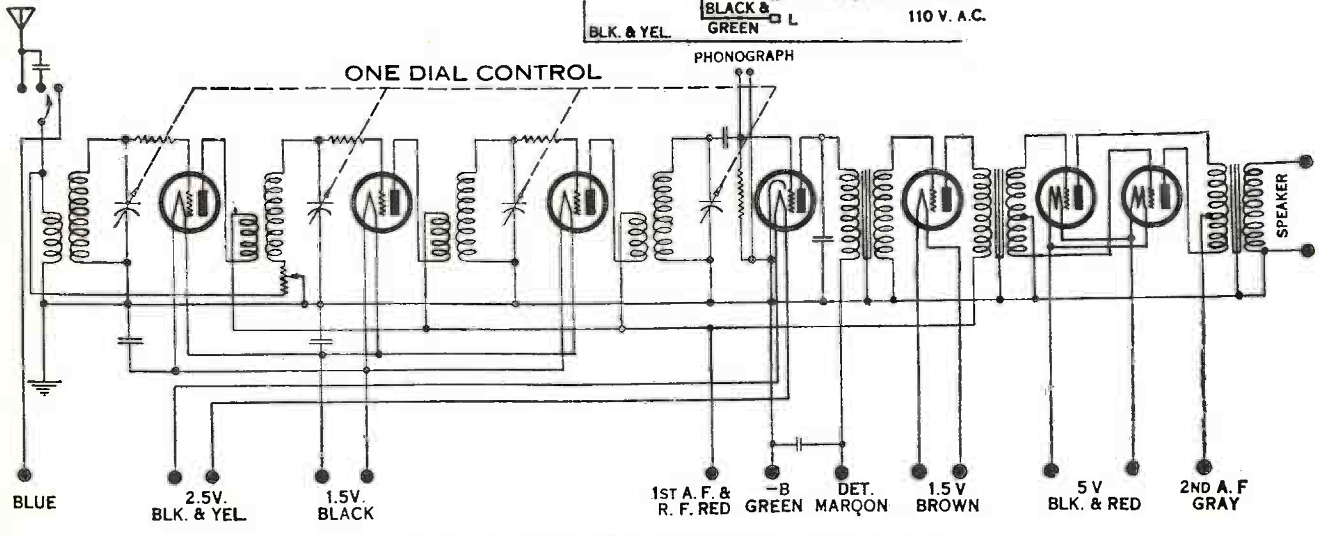

MODEL 801, 801-A, 811, 811-A SERIES B

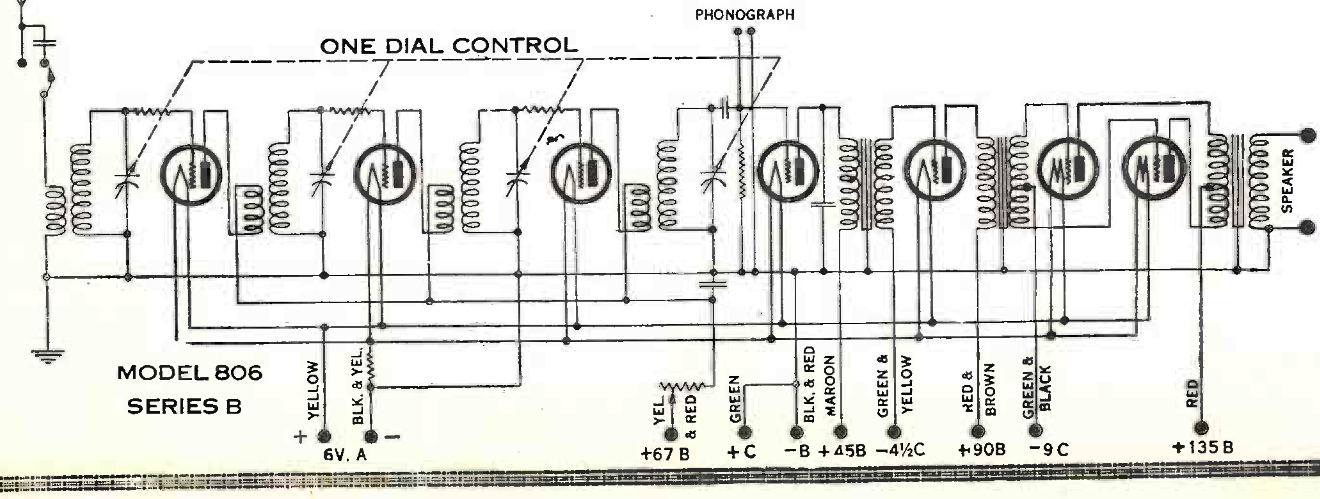

MODEL 806
SERIES B

STEWART-WARNER CORP.

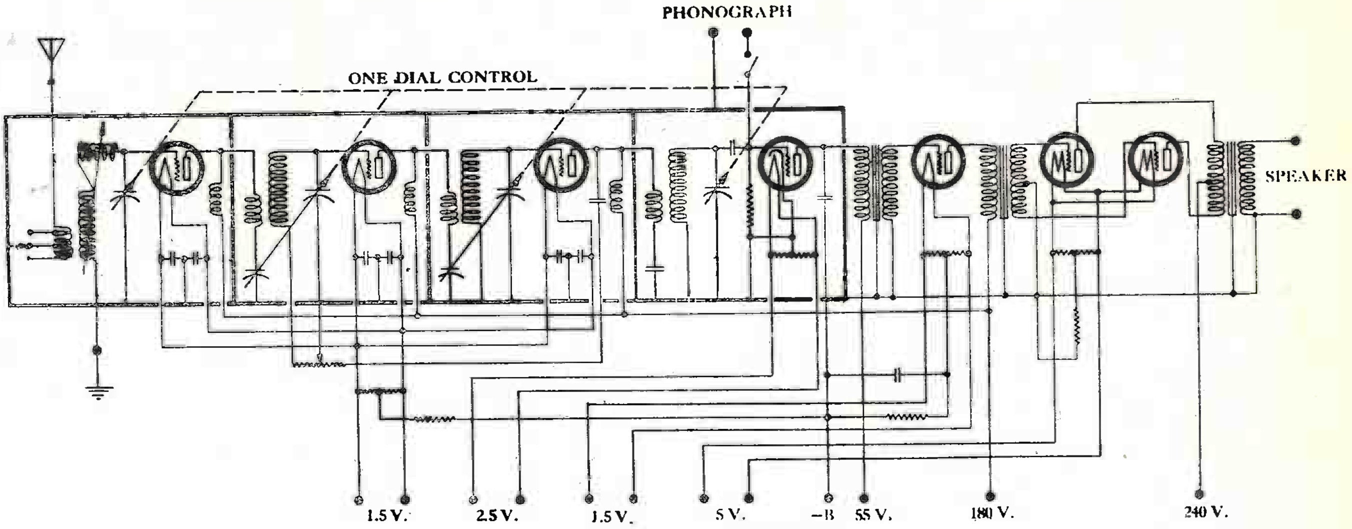

Model 750

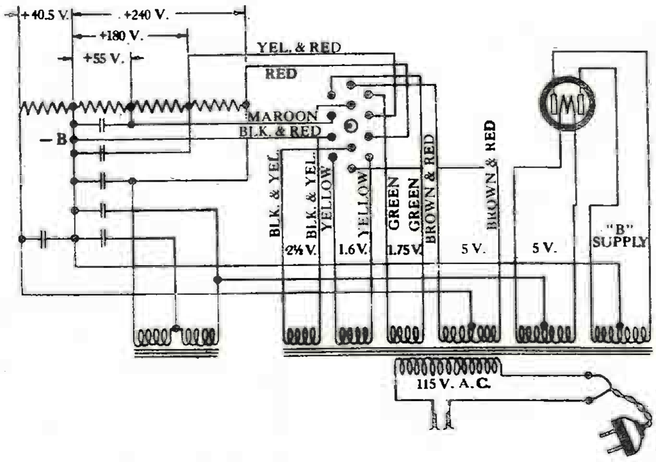

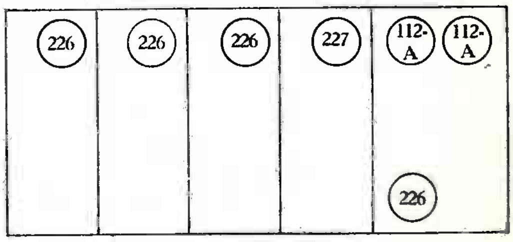

LOCATION OF VARIOUS TUBES
MODEL 750

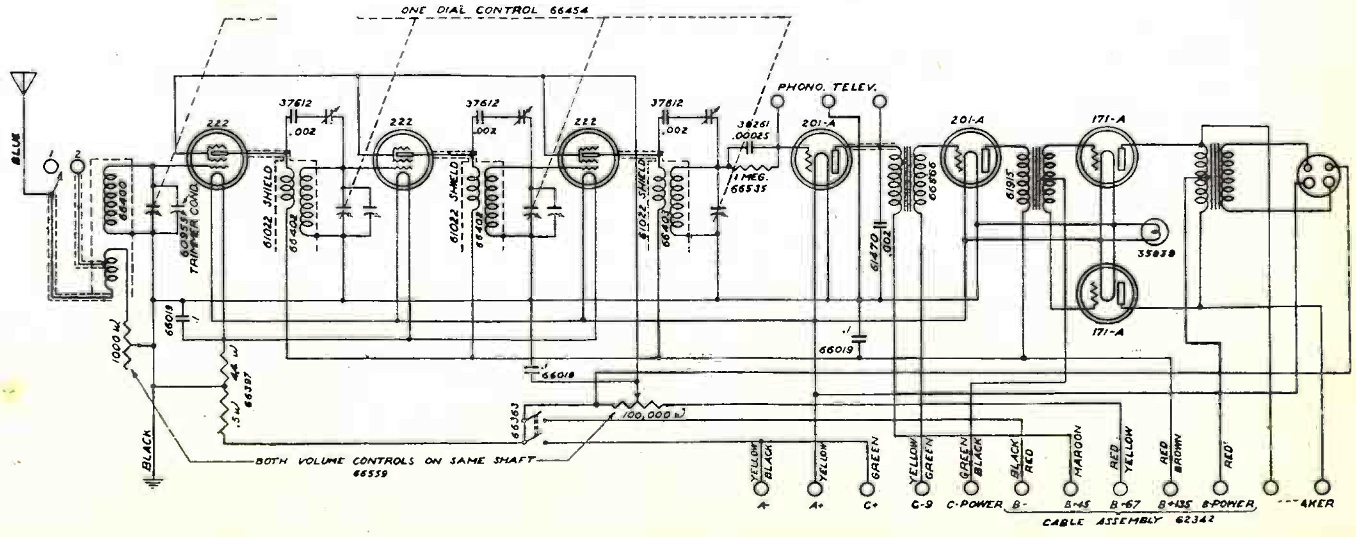

CIRCUIT DIAGRAM OF 950 SERIES BATTERY SCREEN-GRID RECEIVER

STEWART-WARNER CORP.

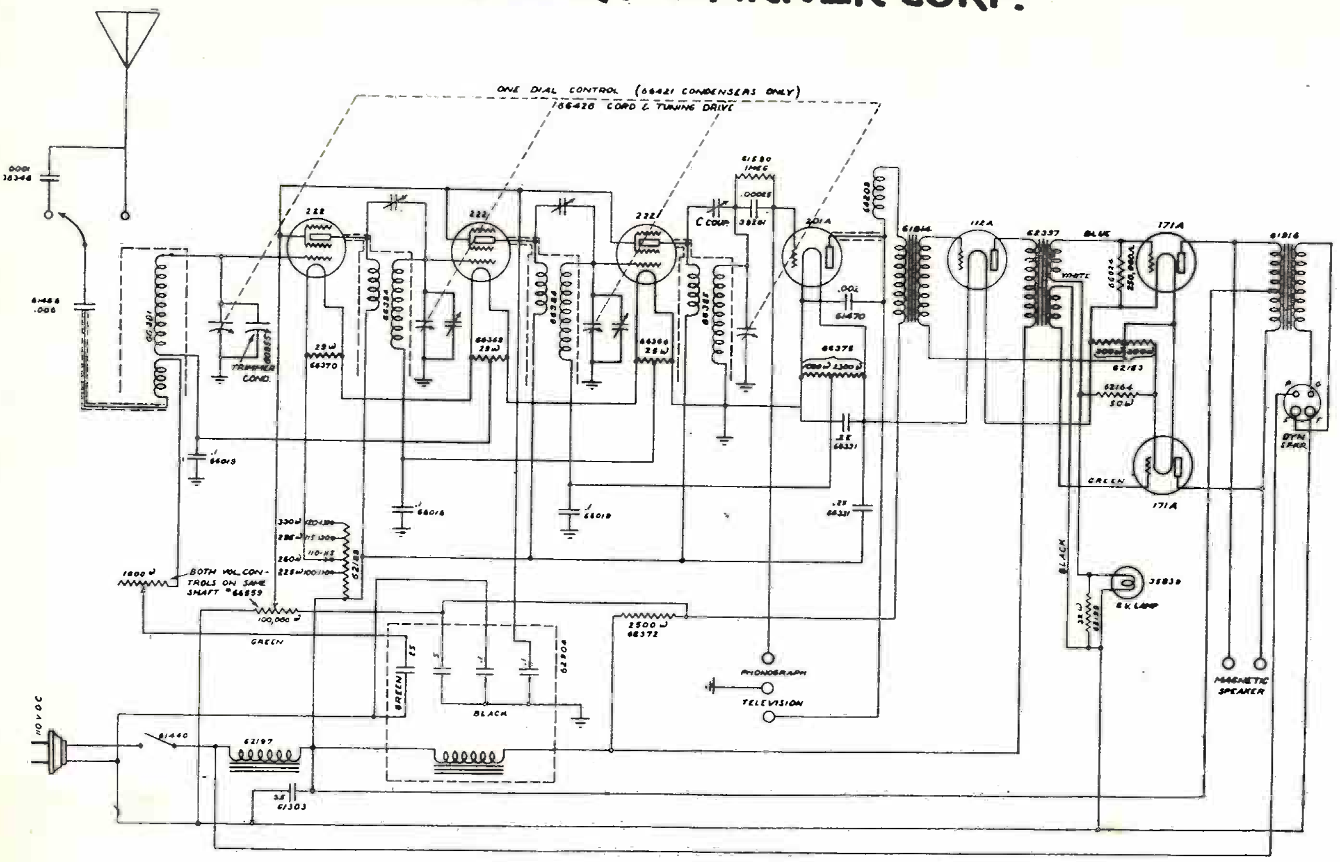

Circuit Diagram of Stewart-Warner 950 Series D. C. Receiver

950 Series 25 and 60 Cycle A. C. Radio Receivers

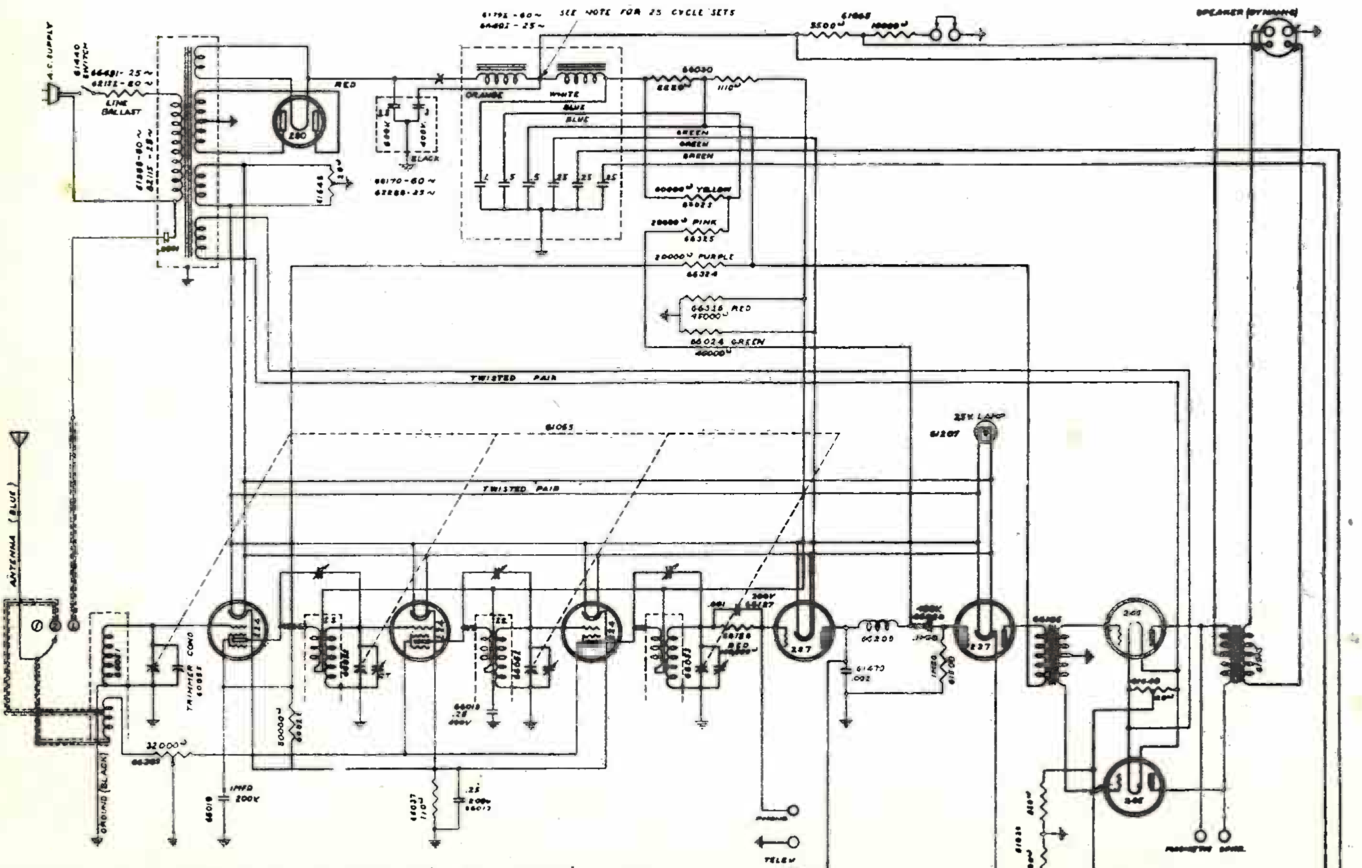

NOTE: FOR 25 CYCLE SETS, RESISTOR #61665 LEADS TO POINT MARKED X INSTEAD OF TO CENTER POINT OF TWO CHOKE COILS AS DRAWN ABOVE.

Radio Service Data Sheet

STEWART-WARNER SERIES 900

This receiver is so designed as to permit the use of aerials of widely differing characteristics. In addition to being adaptable to aerials of the usual type, it makes provision for use of the light-line, if satisfactory operation results when the R.F. input is taken from the light-line through C13. (Sw. 1 on tap L.). If the light-line is being used as the aerial, reversing the line plug may improve reception.

Volume control is effected by varying R2. This varies the grid-bias potential on tubes V1, V2 and V3. The first tube V1 has a tuned input and its synchronism in relation to the other tuned circuits, is accomplished through a trimming condenser, C5, controlled from the panel.

The detector output of this receiver may be tapped to any external equipment, by connection to posts provided on the rear of the receiver. Specifically, it is intended to make convenient the operation of television equipment by connecting to binding posts BP1 and BP3. Also, the detector input may be tapped for operation of a phonograph pickup, by connection to posts BP1 and BP2. There is no switching device for disconnecting the pick-up; for its leads would introduce a capacity that would impair the "phase" conditions, (resonance of the stages) of the set; consequently, the pick-up connections must be removed from the receiver when only radio reception is desired. The amplification of the detector tube is obtained when the pick-up is connected to posts BP1 and BP2.

The circuit used in this receiver is of a neutralized type, and is specifically called a "balanced-bridge" connection. (Changing tubes of the same type does not disturb the circuit balance.) Before attempting to re-balance the R.F. circuits, in the event of circuit oscillation, it is advisable to make certain that the ground is a satisfactory one. It is convenient to do this by connecting a voltmeter between the ground wire and one side of the 110-volt light-line. The maximum voltage reading obtained in this manner should be practically the same as the reading obtained by connecting the meter across the light-lines. Connection to aerial and ground is obtained through two leads; one black, for ground, and one blue, for aerial. Compensation for aerial variation is obtained by adjustment of switch Sw.1; which taps the primary of the input R.F. transformer L1.

In the earlier sets of this series, condenser C26 (next R9) was omitted, and a fixed center-tap resistor used instead of the variable R7. These two changes were made to reduce hum. Should one of the earlier receivers produce an objectionable hum, the set may be brought up-to-date by installing the variable resistor and condenser. (A "No. 66058" bracket is used for holding this unit.)

This receiver is designed to use either a magnetic or a dynamic reproducer; the field winding of the Stewart-Warner dynamic has a D.C. resistance of approximately 1,800 ohms. There is no transformer in this dynamic reproducer; the secondary of the output unit T3 matches the constants of the (12-ohm) speaker voice coil. A 4-connection receptacle is provided for the dynamic reproducer; but magnetic reproducers connect instead to tip-jacks. The "B" voltages, which are disturbed when the dynamic reproducer field coil is removed from the circuit are equalized by load resistor R8; which is placed in shunt with the high voltage D.C. when the "link" is connected to the two binding posts shown at the upper right of the schematic circuit. Magnetic, and other makes of dynamic, reproducers connect, as shown, from plate to plate of the power tubes.

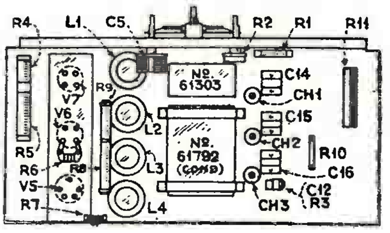

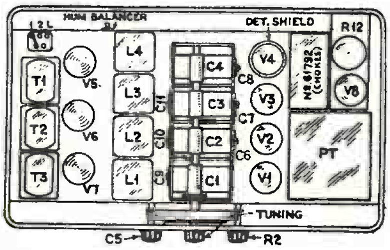

At a line voltage of 110, the primary of PT should receive about 88 volts. When making any changes in the receiver connections or parts, it is well to watch the regulator R12. If it heats to a visible red, the plug should be pulled and circuit checked.

The parts of this receiver may be duplicated for service replacements by using the code numbers included in the following data: Units C1, C2, C3, C4, C6, C7, C8, C9, C10 and C11 constitute a complete assembly, No. 61,055—complete with bracket, No. 61,933; C5 is No. 60,955; C12, 38,261; C13 of .0001-mf. capacity is included in the shield can of PT; C14, C15 and C16, of .006-mf., are each 61,469; C17, .002-mf., 61,470; C18, 1.5 mf., 600-volt rating and C19, 2 mf., 400-volt rating are 61,303; C20, 0.5-mf., 400-volt; C21, 1.0-mf., 400-volt; C22, 0.5-mf., 400-volt, C23, C24 and C25, 0.25-mf., 200 volt, constitute, with two choke coils, filter bank 61,729; C26, 1.5-mf., 66,059. The resistors are. R1, 800 ohms, 61,830; R2, 60,000 ohms (max.), 61,557; R3, 1 meg. 61,590; R4, 2,400 ohms—R5, 850 ohms—constituting unit 61,839; R6, 20 ohms, 61,648; R7, 20 ohms, 66,060; R8, 10,000 ohms and R9, 5,500 ohms constitute unit 61,665; R10, 75,000 ohms, 61,559; R11, 7,000 ohms, 61,833; R12, line ballast, 61,868. Power transformer PT is 61,888; L1, 61,803; L2, 61,804; L3, 61,805; L4, 61,806; Ch1, Ch2, and Ch3, 61,405; T1, 61,914; T2, 61,915; T3, 61,916. For the pilot light V9, a 2.5-volt lamp is used.

All connections in this receiver are gold-plated; copper is used for shielding. The line-voltage ballast R12 is designed to equalize line voltages between the limits of 100 and 130 volts. The R.F. transformers are checked at three wavelengths from the output of a crystal-controlled oscillator at the factory; little likelihood that they are not in exact balance with each other, should the tuning circuits not "phase" exactly.

In this receiver the plate D.C. supply for the set is fed through R.F. chokes, Ch1 Ch2 and Ch3. Resistors R4 and R5 are wound on one form.

Units which might be subject to occasional replacement are easily removable from the set chassis. Filament leads are twisted pairs.

The grid bias on the '27s is limited to a minimum value by R1; but R2 makes possible a maximum bias which is sufficient to give full control of the amplification obtainable from the receiver.

TABLE 1

(*Readings with Jewell "Pattern 199"*)

				Milliamps.	
Tubes	Volts "A"	Volts "B"	Volts "C"	Plate Normal	Grid Test
V1	2.2	132	8.5	3,8	7,0
V2	2.2	138	8.5	3.2	5.8
V3	2.15	132	8.5	3.9	6.8
V4	2.10	32	0.0	2.8	2.8
V5	2.2	132	7.5	5.4	6.5
V6	2.25	226	47.5	26.0	30.0
V7	2.25	226	47.5	26.0	30.0
V8	4.7	......	......	......	......

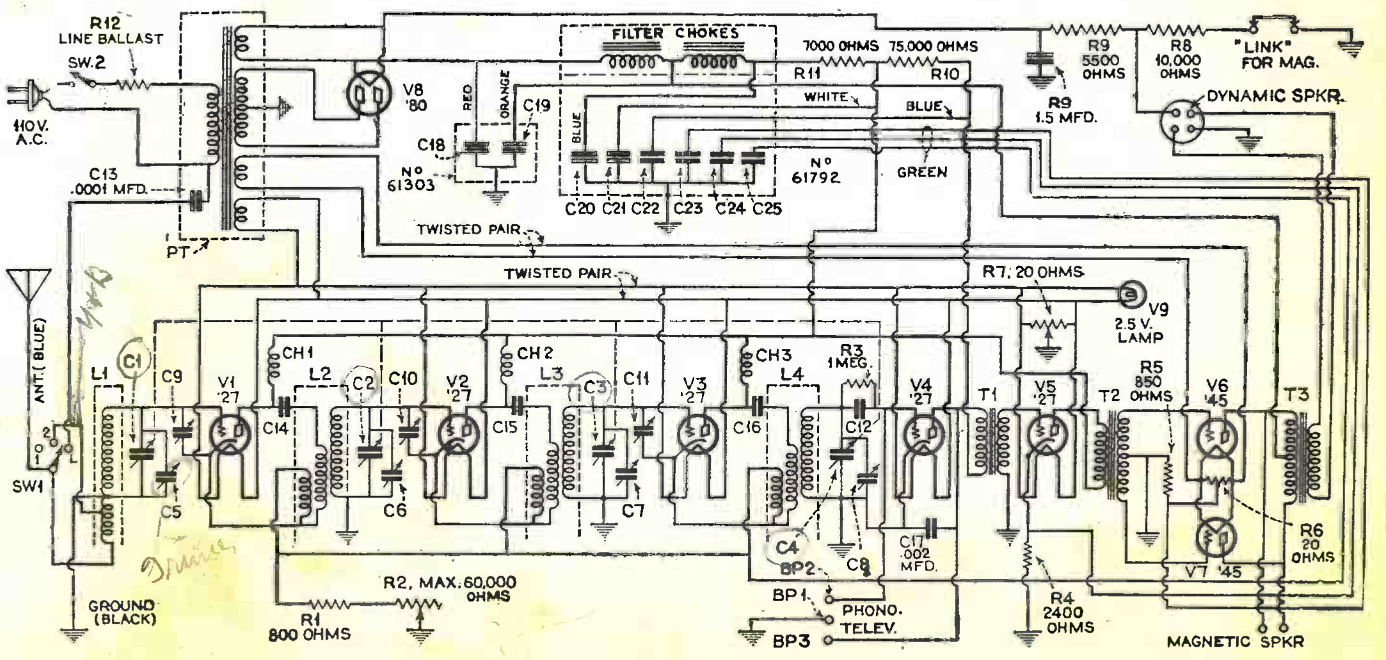

STROMBERG-CARLSON MFG., CO.

CIRCUIT D-988

(AUDIO POWER UNIT D-987)
FOR #523-524 D.C. RADIO REC.

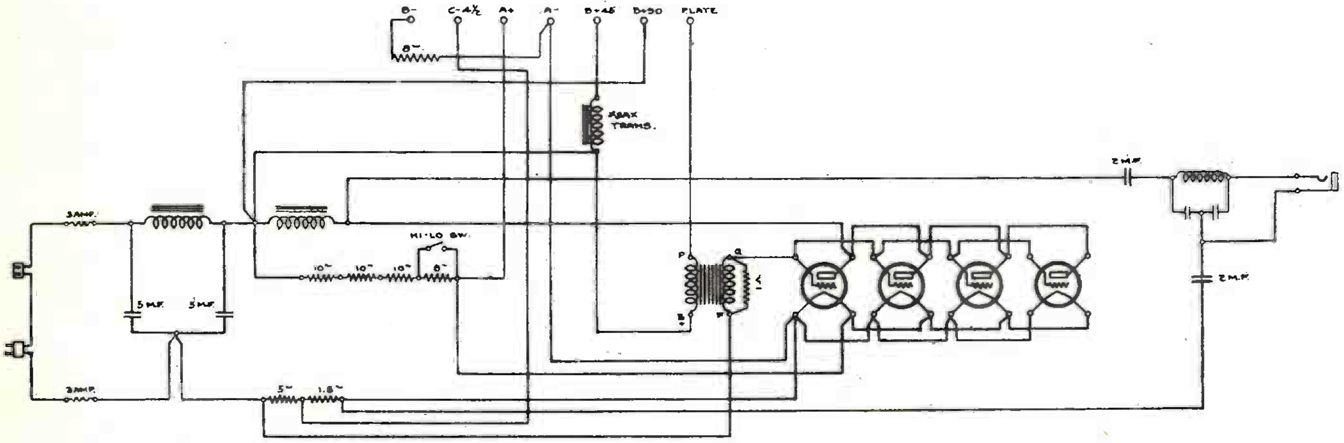

#523 & #524 D.C. RADIO RECEIVER CIRCUIT

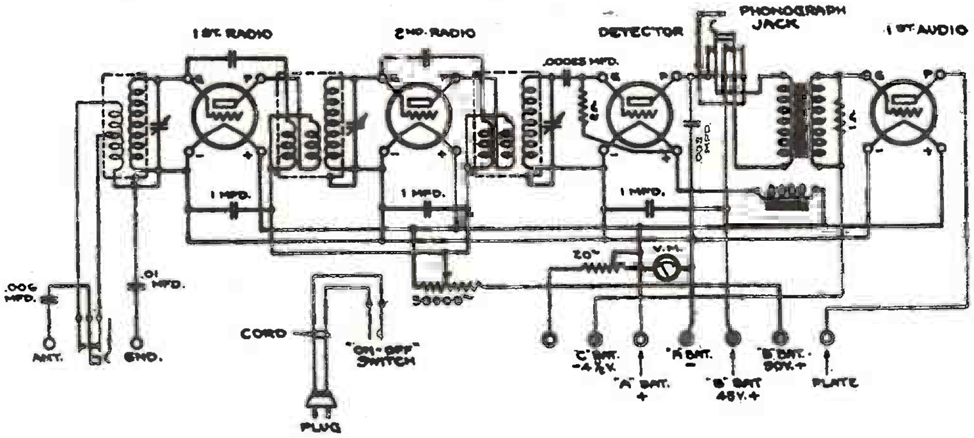

Schematic Circuit Diagram of Stromberg-Carlson Receivers Nos. 635 & 636.

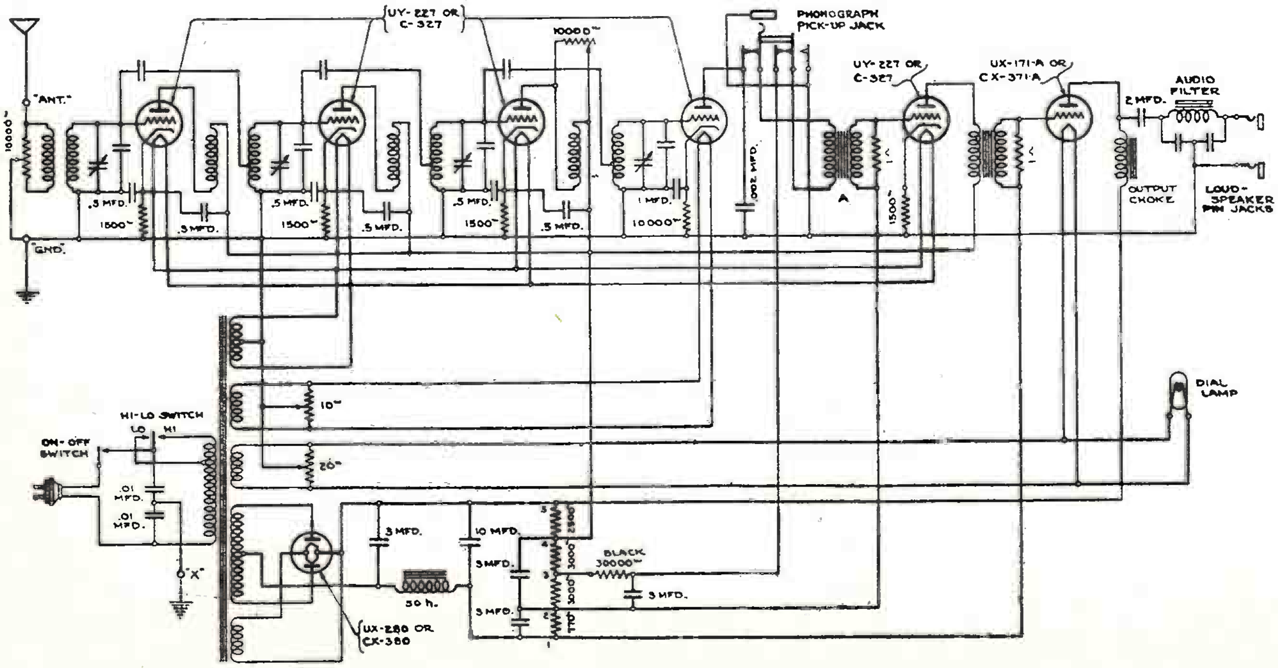

Radio Service Data Sheets

STROMBERG-CARLSON Nos. 641 & 642

As will be seen in the photograph of the assembled units, all operating parts are enclosed. All transformers, inductances and capacities are mounted in metal boxes; and filled with moisture proof compound. The power transformer leads are laced to the main cable. To insure good connection for the grounding leads, the chassis of steel has been copper plated. The 641 is a small model in a cabinet known as the "Treasure Chest." The 642 is the same chassis, nearly, in an art console. A removable panel is provided on the cabinet bottom to allow ready access to the apparatus and wiring on the under side of chassis base without dismantling the cabinet. (In the case of the 641.) The receiver chassis and reproducer are bolted to a removable structure; as is also the front panel. This renders servicing easy. The items shown in the photograph are numbered as follows: 1, Output transformer assembly; 2, audio amplifier socket ('45); 3, A.F.T.; 4, "gnd." post; 5, "ant." post; 6, cover over tubes (one nearest dial, '27; next three, '24's); 7, filter condenser bank; 8, cover over high-low switch; 9, power supply cord; 10, rectifier tube ('80) socket; 11, power transformer; 12, choke coil assembly; 13, volume control and switch; 14, dial; 15, selector control; 16, on-off switch; 17, pilot lamp socket and bracket. Pin jacks for loud speaker cord are at rear, left, (and consequently not visible); while the pickup jack, power outlet, and power supply cord are grouped at rear right. The volume control is double and operates by varying the biasing potentials on the control grids of the first and second radio amplifier tubes as well as the voltage supplied to radio amplifier from the antenna. The two controls are simultaneously operated from one knob. The grid bias control does not begin to operate until the volume is partially reduced by the antenna control; this prevents distortion due to overloading the radio amplifier when the volume is turned down on very strong local signals. This type of volume control does not cause detuning when it is varied. A '27 is used as a "linear" power detector with automatic bias. This detector operates at high radio frequency voltages provided by the R.F. amplifier and is not subject to the ordinary distortion to which the "square law" detector is heir. The grid bias is automatically adjusted to the proper value for the strength of signal received to obtain this linear characteristic. The value of the R.F. input to the detector is so high that the output may be fed directly into the single stage of amplification shown in the diagram. The output transformer secondary connects to pin jacks, in the model 42 receiver; in the 41, a fixed condenser connects one pin jack capacitatively to the primary of the output transformer, while the other pin jack is then connected to the center tap on the 10 ohm resistor which shunts the power tube filament. A jack has been placed in the rear of the chassis for plugging in a pickup. By turning the volume control completely "Off" (counter-clockwise) the pickup is connected in the grid circuit of the detector tube. This tube then acts as an amplifier, making a two stage amplifier for the pickup energy. To energize an A.C. type dynamic reproducer an outlet has been supplied in the model 41; it is automatically cut off when the set is disconnected at the panel. In the 42 this outlet is used to supply the A.C. needed for the built-in dynamic reproducer. Hum due to this circuit arrangement of the reproducer is nullified by careful design; including the use of a "shading ring." Rust flakes and filings in the air gap will result in distorted reception. To reduce as much as possible this cause of poor operation, the pole pieces have been heavily zinc plated. Very complete shielding is necessitated by the high amplification obtained through use of type '24 tubes. (These receivers give an amplification from antenna to the grid of detector tube of approximately 255 000 and an overall amplification from antenna to output of approximately 2,350,000. Comparing this with a good receiver using the same number of tuning stages with '27 tubes and employing the customary detector and two A.F. stages which gives an amplification from the antenna to the detector grid of approximately 12,500, and from the antenna to the output of approximately 575,000, it will be observed that the Nos. 641 and 642 receivers have approximately 20 times more amplification between the antenna and the detector. This allows the use of a linear power detector, the omitting of the first audio stage and still gives an overall amplification of approximately four times that of the other receiver. Instead of the dynamic reproducer field, a floor lamp may be connected to the A.C. output jack mentioned above.

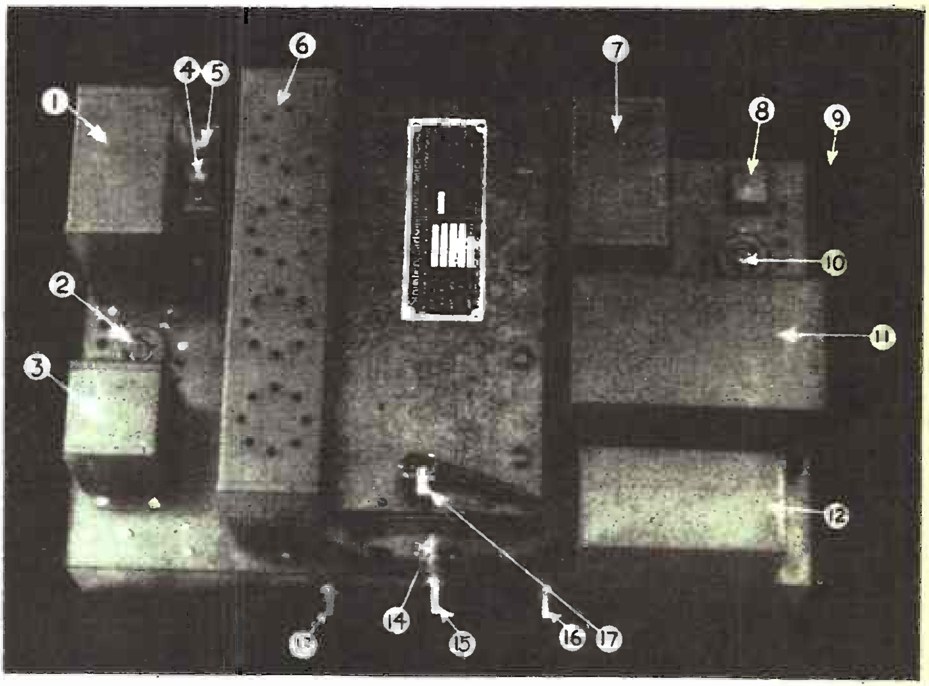

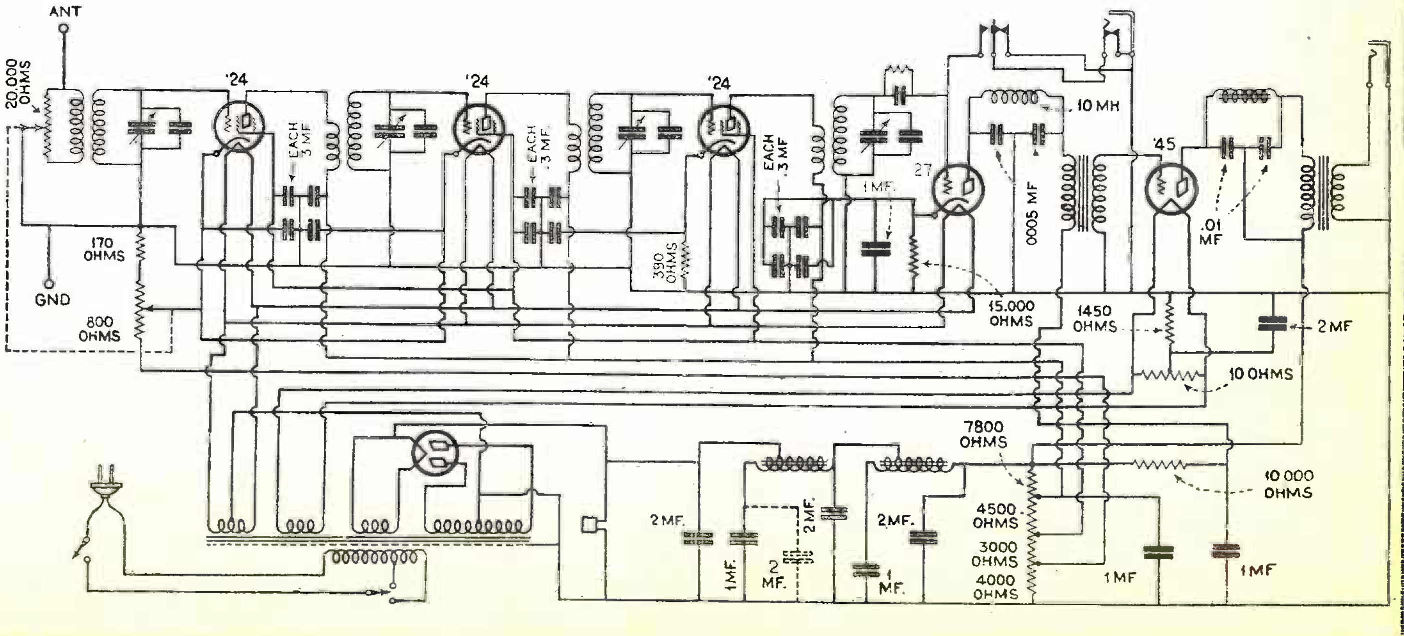

STROMBERG CARLSON MFG.,CO.

NO. 638 D.C. RADIO RECEIVER SCHEMATIC DIAGRAM

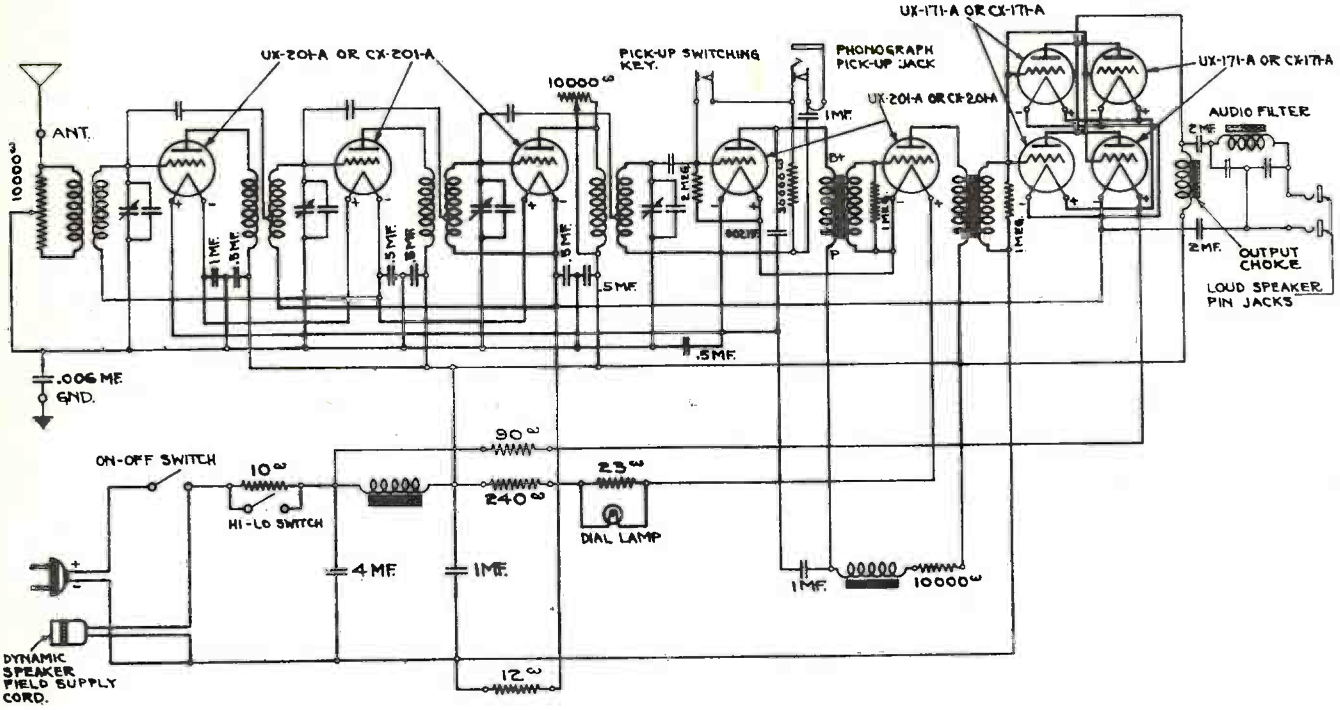

Nos. 652 and 654 Receivers

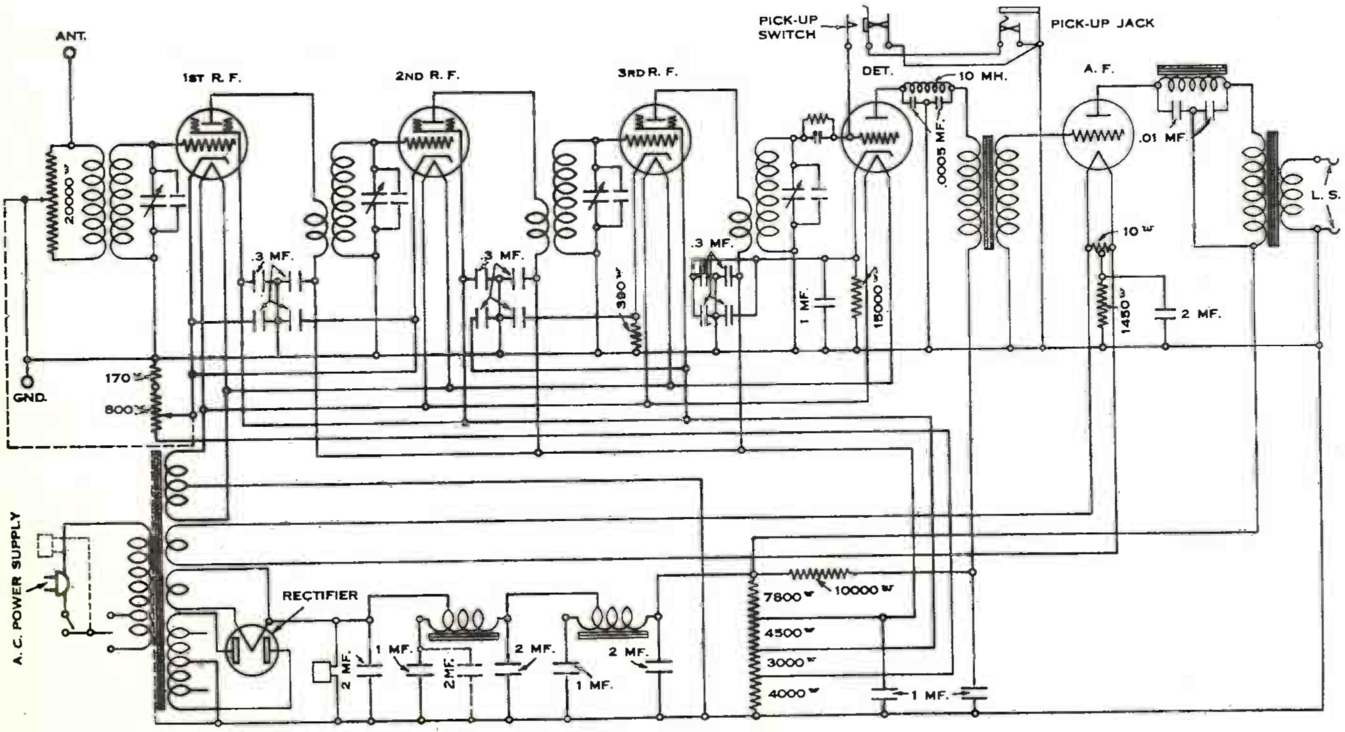

STROMBERG-CARLSON MFG., Co.

No. 846 Radio Receiver

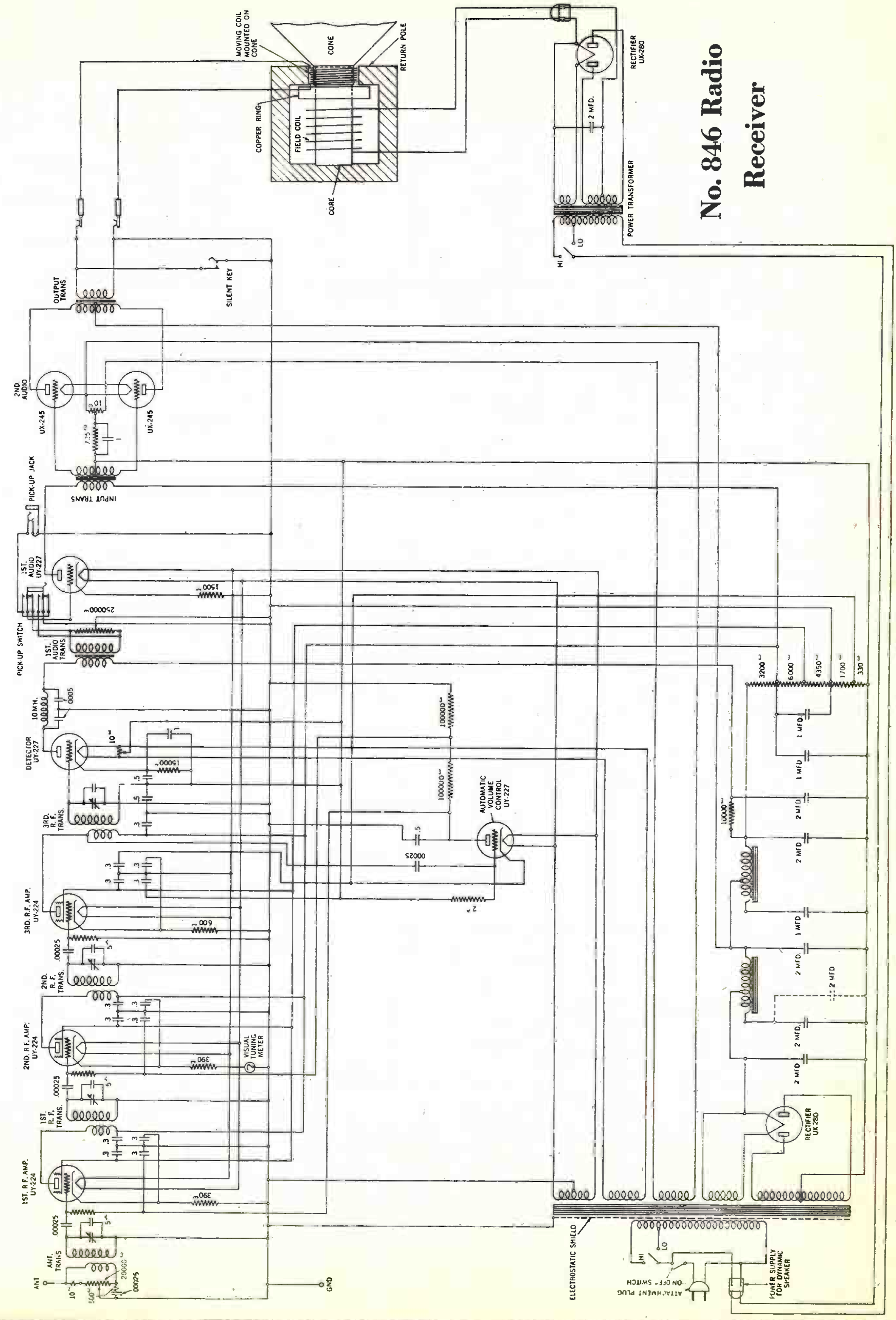

STROMBERG-CARLSON MFG.,CO.

403 AA AUDIO POWER UNIT

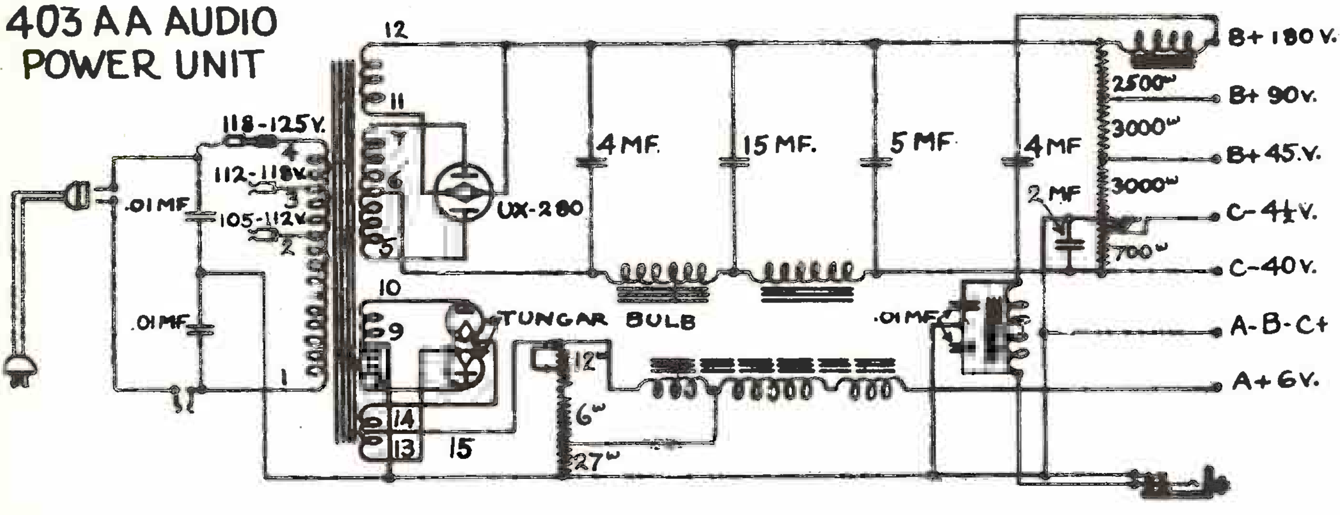

404 RA & 404 RAC S.P.U.

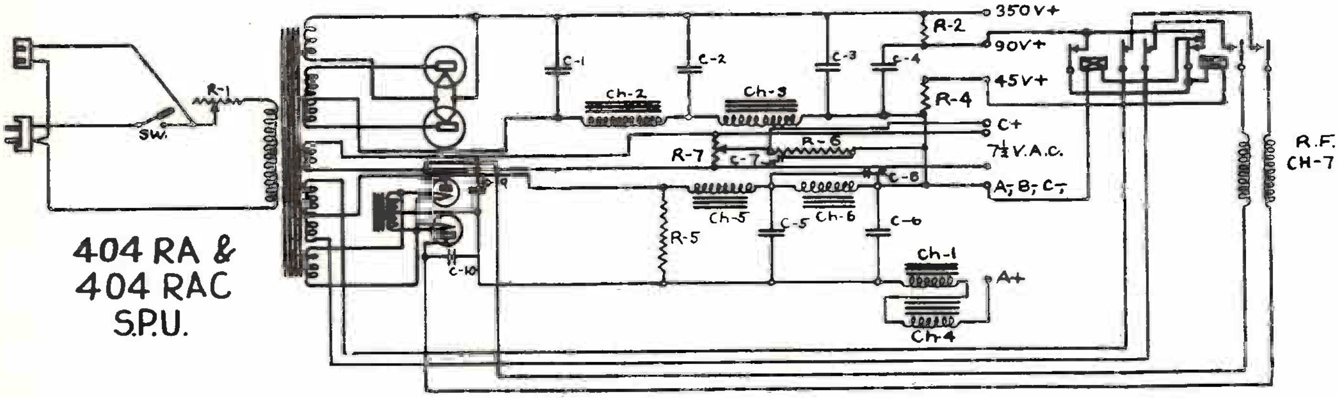

403-B AUDIO POWER UNIT

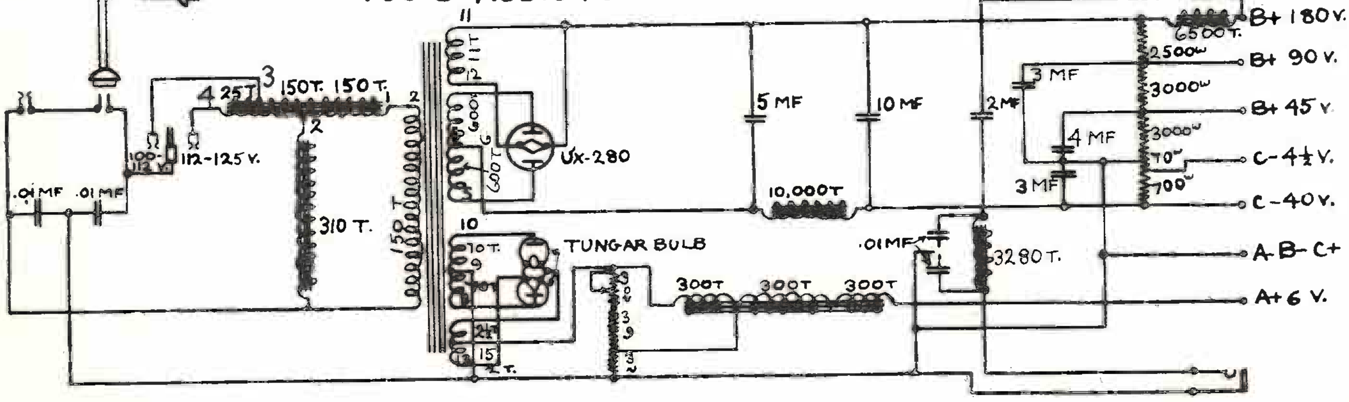

STROMBERG-CARLSON MFG., CO.

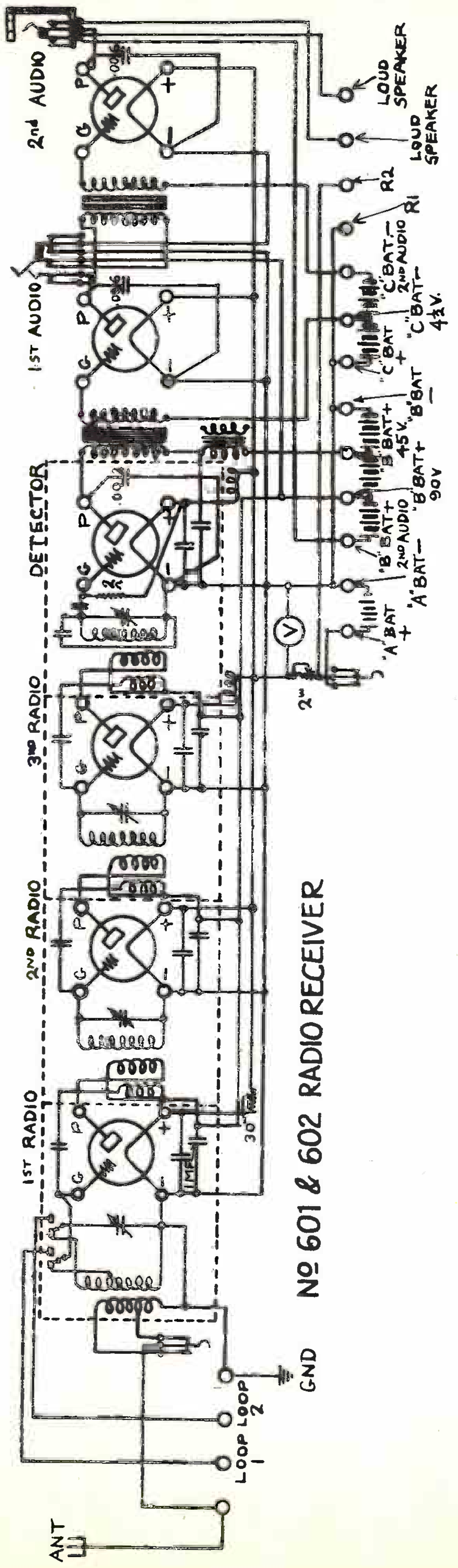

No 601 & 602 RADIO RECEIVER

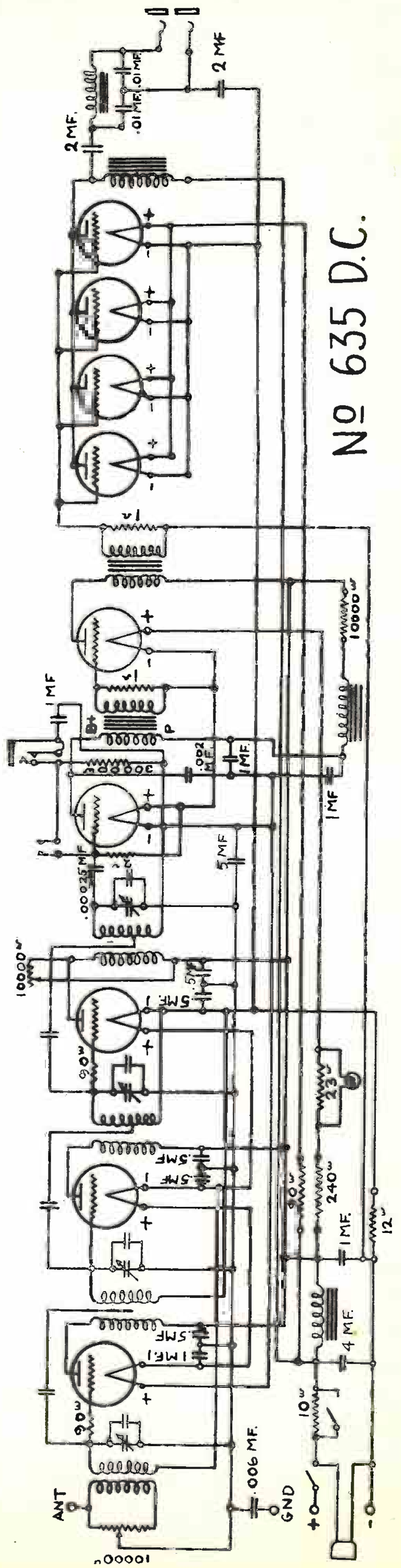

No 635 D.C.

STROMBERG-CARLSON MFG., CO.

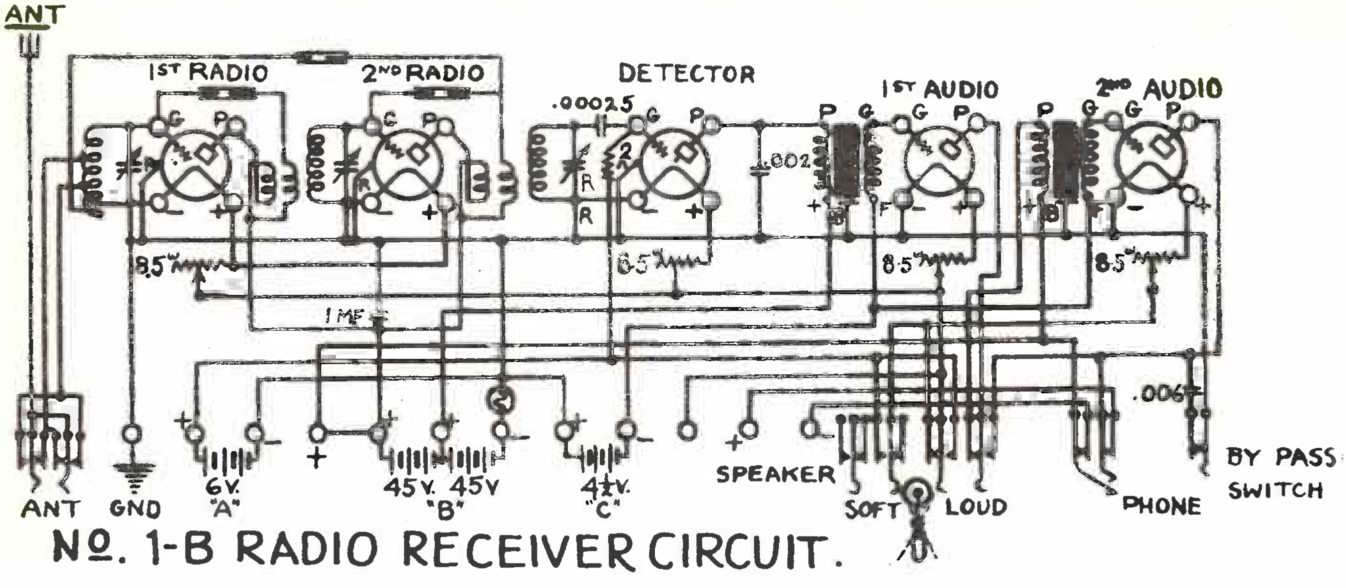

No. 1-B RADIO RECEIVER CIRCUIT.

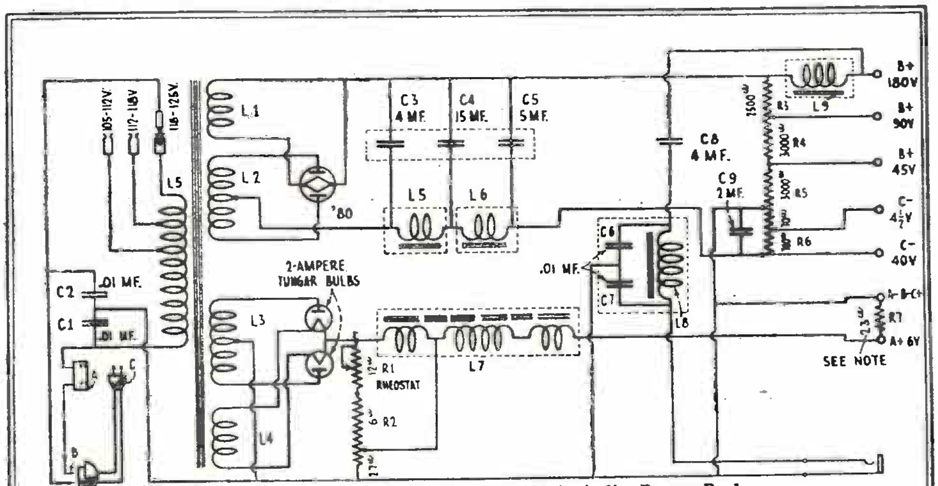

Stromberg-Carlson Model 403 and 403A Audio Power Pack

Schematic Circuit of Chassis for Nos. 10 and 11 Receivers

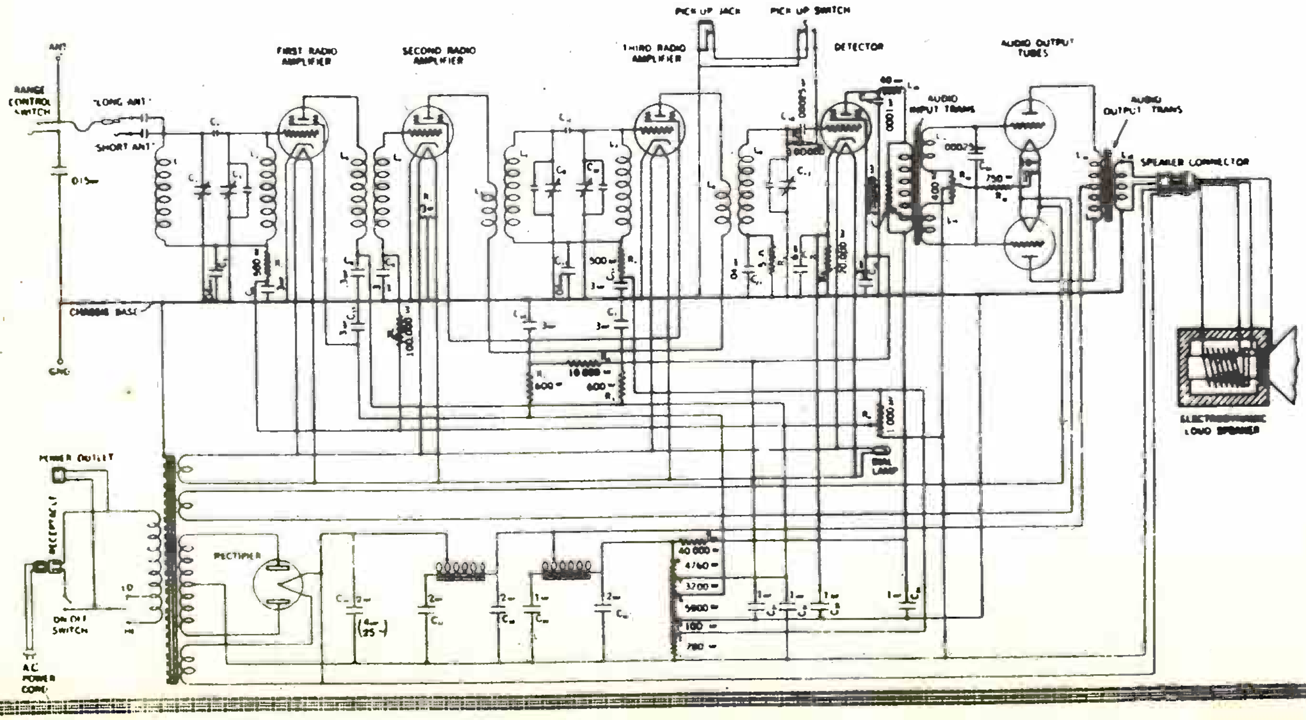

STROMBERG-CARLSON MFG. CO.

NO. 744-B

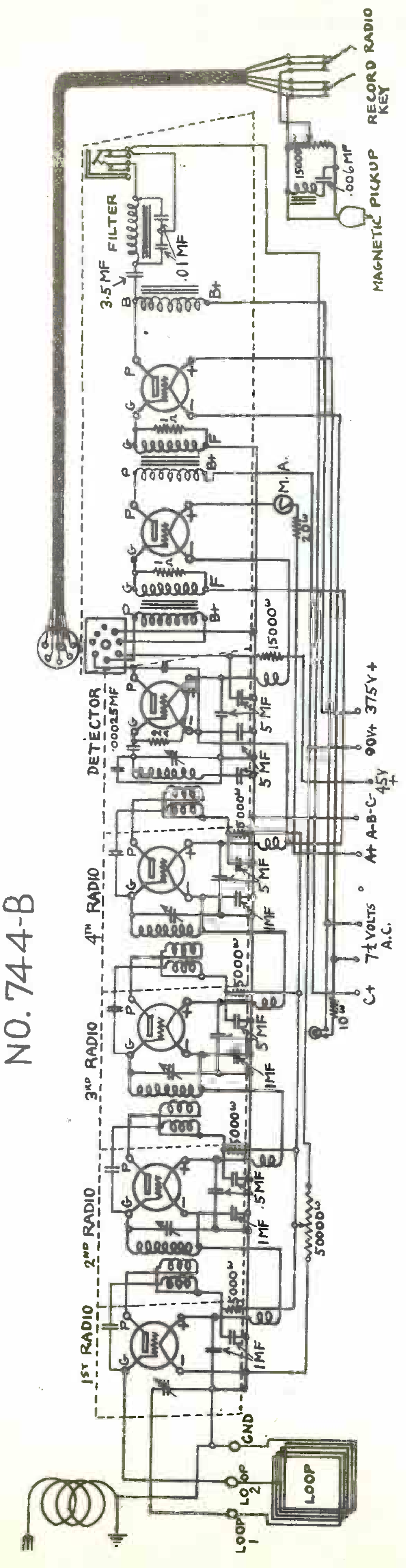

No. 501 & 502

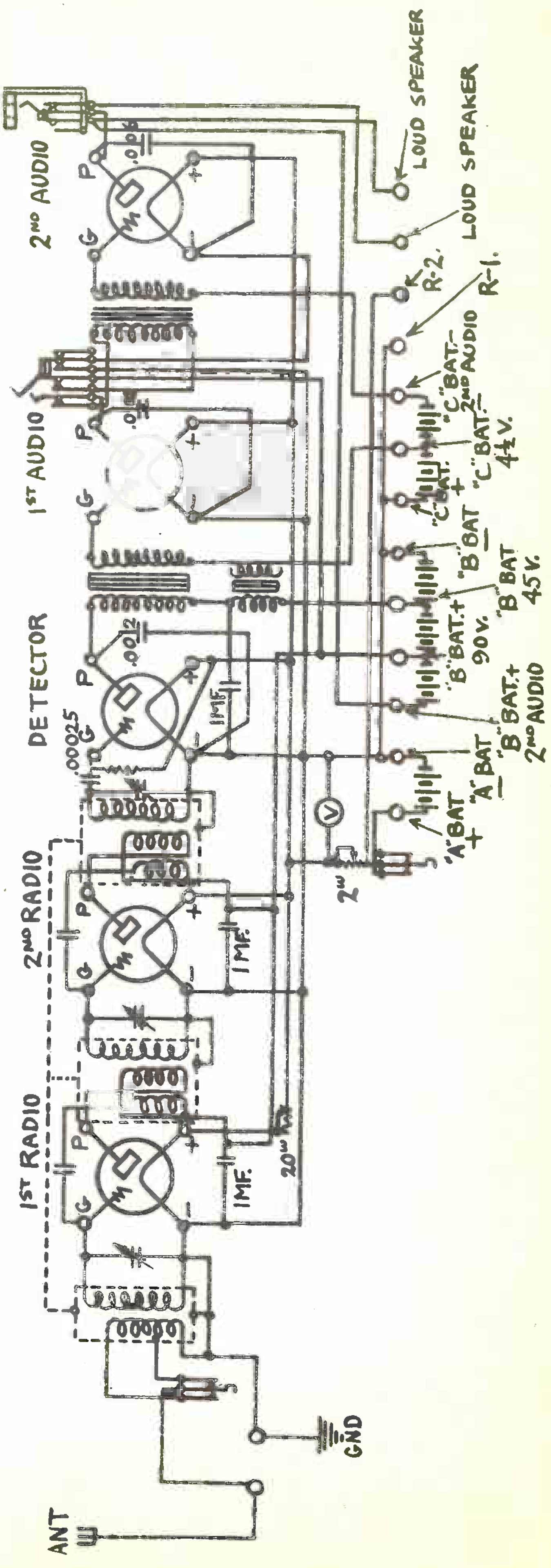

STROMBERG-CARLSON MFG. CO.

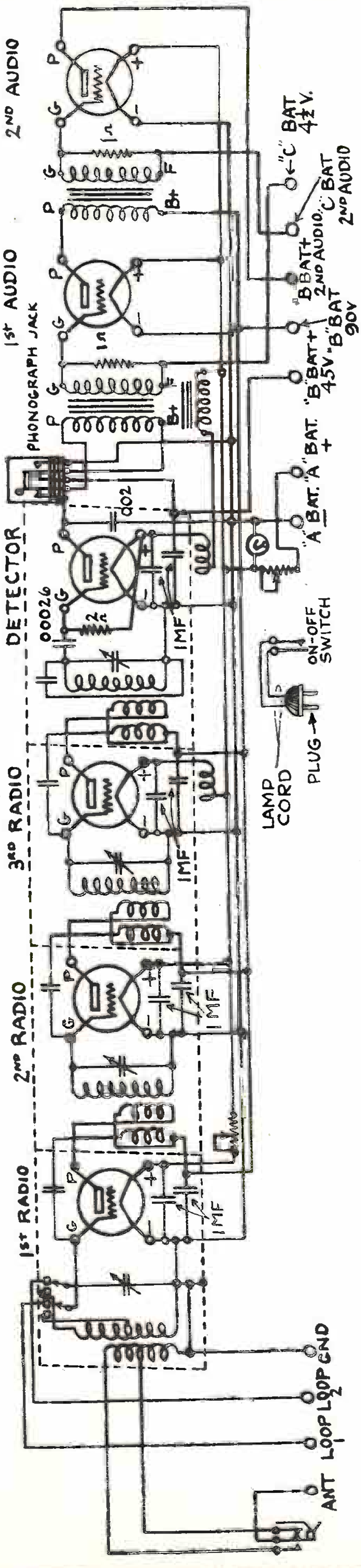

No. 633 & 634

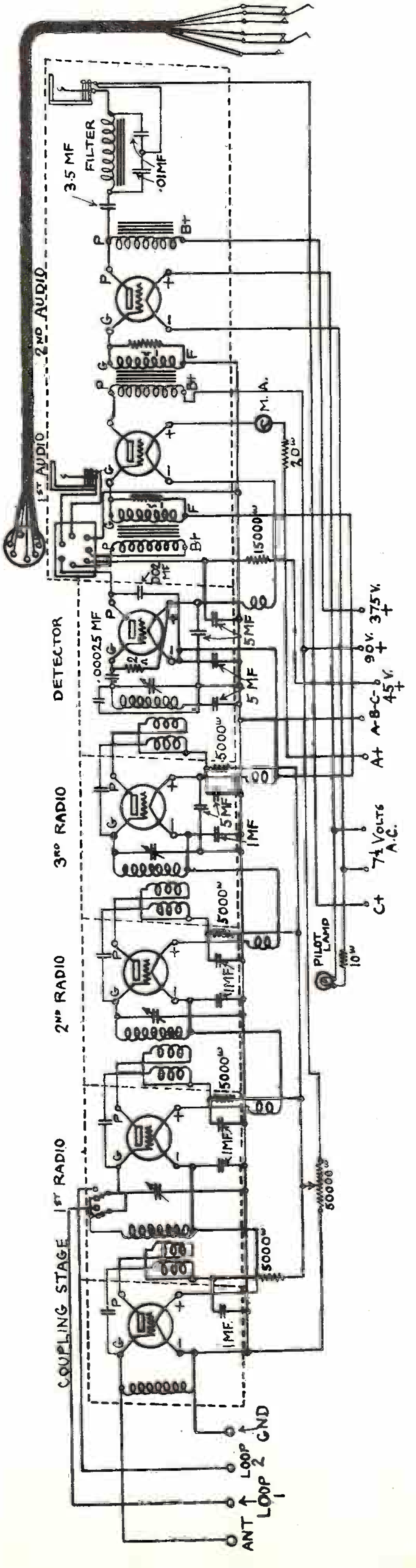

No. 734-B

Radio Service Data Sheets

TEMPLE—Models 8-60—8-80—8-90

In this receiver A.F. transformer TR1 has a ratio of 4-to-1; TR2, 3-to-1. Cases are occasionally reported where, when a loud signal is tuned into the set, the receiver will suddenly go dead but immediately start again if it has been retuned. This condition is due to fine metallic dust which collects between the condenser plates and causes an electrostatic short at irregular intervals. Every precaution to overcome this difficulty has been taken and it is not found in receivers bearing serial numbers over 8000. (Pipe cleaners make excellent condenser plate cleaners.) The small carbon resistors on the bottom of the chassis have been color coded (to prevent substitution of wrong values), as follows: 750,000 ohm resistor, either all red or natural color with a blue dot. The 2 meg. leak is natural with a yellow dot and the 43,000-ohm resistor (detector plate lead and also in phonograph pickup lead), all black or black with dark green dot or all black with red end. In case a carbon resistor is substituted in place of the wirewound grid suppressor these will be light green in color. The voltages indicated in the table, "Set Analysis," for 112 volts; any other than this requiring due allowance for the different values which will be indicated. Wide plate voltage variance denotes poor rectifier tube or defective power pack; great milliammeter variation, unsatisfactory tubes. No reading on the filaments shows that either there is no A.C. input, that a fuse has blown, or there is an open primary in the power transformer. Before making further test be sure that the A.C. line to which the set has been connected is alive. (To test your A.C. line the easiest way is to simply insert any 110 volt lamp in the socket to be used for the radio line connection.) No "C" voltage on the '27's denotes either defective resistors in the cathode return or shorted resistor by-pass condensers. No "C" voltage on the '45 indicates a defective resistor in the filament-to-ground circuit of the '45's or a shorted by-pass condenser across the 900 ohm portion of the large resistor. The UX280 or the CX380 is recommended by the manufacturers for the reason that some makes of tubes pass 200 milliamperes instead of the required 125 milliamps, at 350 volts. This would cause (a) the A.C. input fuse to blow; (b) rectifier tube burnout; or, (c) power transformer to heat to a dangerous point. In instances of excessive hum (a rare condition, as unusual precautions have been taken to prevent this, as a study of the schematic will, in part, show), check the characteristics of the detector and first audio tube. All receivers bearing serial numbers under 7,500 have the pilot light in parallel with the '27 filaments. Beginning with serial numbers approximately 7,600 the pilot light light is parallel with the filaments of the '45 tubes. This change was made due to the fact that many of the 2½-volt pilot lights supplied by the lamp maker would show a decided flicker when their source of power was from the '27 filament line. Changing pilot lights usually temedied this trouble but it was found far more satisfactory to make the change of filament wiring and thereby entirely do away with the flicker. It is suggested that service men working on sets having serial numbers below 7,500 make this filament wiring change while the chassis is out of the cabinet, as a matter of standard practice toward increased customer satisfaction. In spite of the fact that most A.C. sets apparently work almost as well without a ground as they do with, the installer should in no case make an installation where the set is not connected to a good ground. This can be either a cold water pipe or if necessary a steam radiator. In installations where neither are available a six-foot iron pipe driven in the ground outside of the house, preferably in a position where the soil is moist, will be satisfactory. In some instances high resistance in the water meter where sets are grounded to the water pipe will cause oscillation or impaired reception due, often, to excessive regeneration. Cases of this kind are easily remedied. Simply fasten a ground clamp on each side of the water meter and connect a No. 14 wire "jumper" across the meter, attaching to the two ground clamps. The 14 inch dynamic reproducer is designed particularly for this receiver. Tuning is of the single-control type. With every stage balanced at the factory extreme sensitivity and selectivity result. This excellent operation is obtained through proper use of 1000 ohm grid suppressors; and volume is adequately governed by the 6000 ohm unit. Under exceptional conditions it may be desirable to shunt the low resistance R.F. transformer in the plate circuit primary of the second stage (second tube), with a 10 ohm resistance. This unit has been provided; and is controlled by the switch indicated in the schematic circuit. As the field coil of the dynamic reproducer constitutes part of the main filter, any defect in this winding will become manifest in the receiver performance, and plate potentials will not be obtainable; with the exception of the supply to the '45 tubes, which does not go through the reproducer field coil. The first choke coil is contained in the power pack carrying on top of it fuse connections for the 110 volt primary. This winding is tapped for 110 and 125 volt supplies and change is made by reversing the position of the 2 ampere protective fuse. Both the first audio transformer and the input transformer of the '45 push pull stage are mounted in the metal can located nearest to the condenser drive. In case of open A.F.T. windings, replace both transformers (the entire can) thus insuring a perfectly matched audio amplifier at all times.

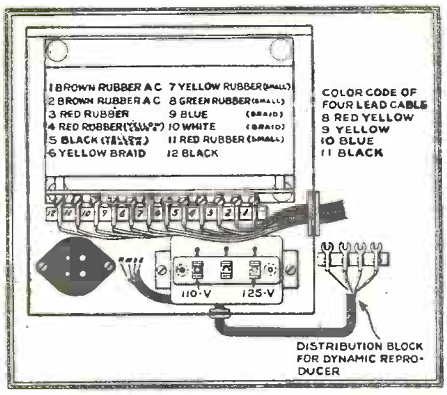

TYPICAL SET ANALYSIS

Tubes		Tubes Out		Tubes In					
		Voltage		Voltage					
Type	Use	"A"	"B"	"A"	"B"	"C"	Normal Plate M. A.	Plate M. A. Grid Test	Plate M. A. Change
'27	R.F.1	2.10	136	2.05	124	7	4.8	6.9	2.1
'27	R.F.2	2.10	136	2.00	122	6	4.6	6.8	2.2
'27	R.F.3	2.15	136	2.00	122	7	4.7	6.8	2.1
'27	R.F.4	2.15	136	2.05	121	7	5.0	7.2	2.2
'27	Det.	2.15	140	2.10	48	0	2.5	3.0	0.5
'27	1st A.F.1	2.15	164	2.10	140	8	4.2	5.8	1.6
'45	Out.	2.45	260	2.25	240	43	26.0	32.0	6.0
'45	Out.	2.45	260	2.25	240	44	22.0	28.0	6.0
'80	Rect.	5.40	AC	4.80	AC	0	*50.0	0.0	0.0

Line Voltage 112. Volume Control Position Full On. *Reading on meter, one anode only; actual current twice this value. Note: Cathode voltages show a reversed reading.

DIAGRAM OF RECEIVER CHASSIS

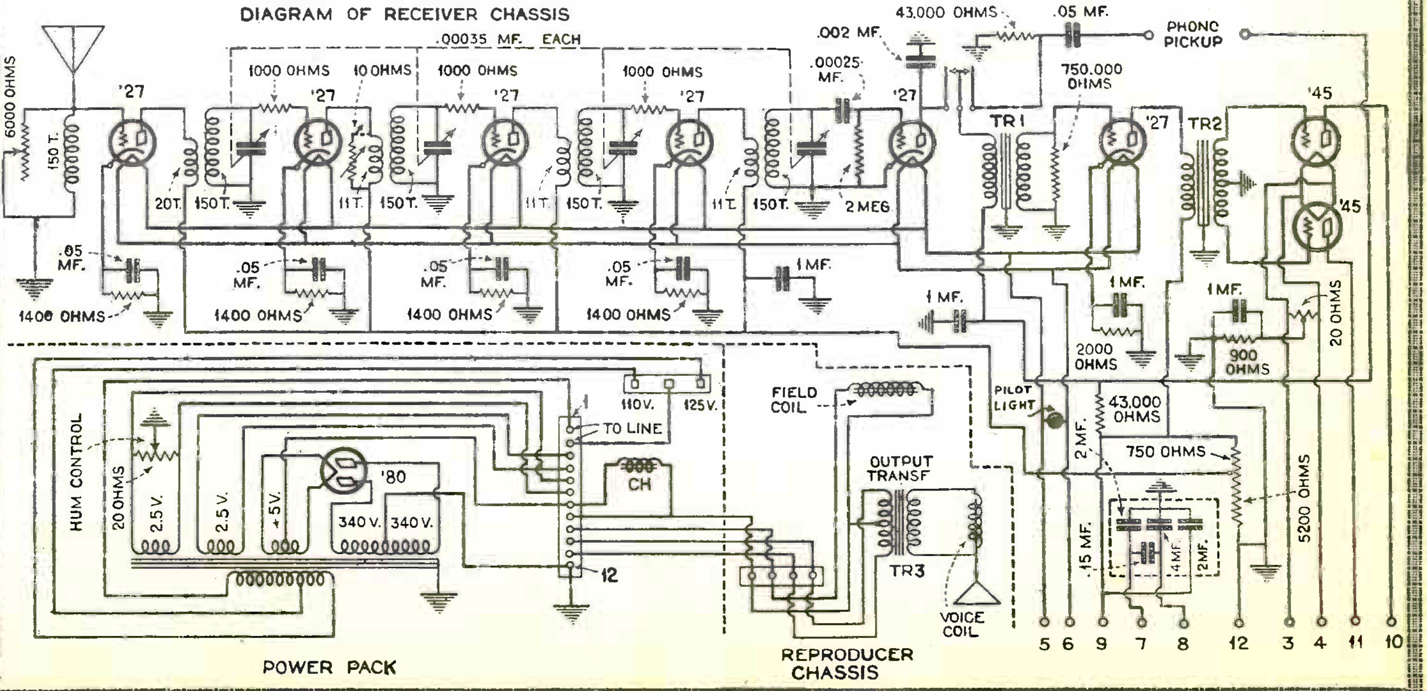

TEMPLE CORPORATION

Models 8-61—8-81—8-91 Temple Receivers

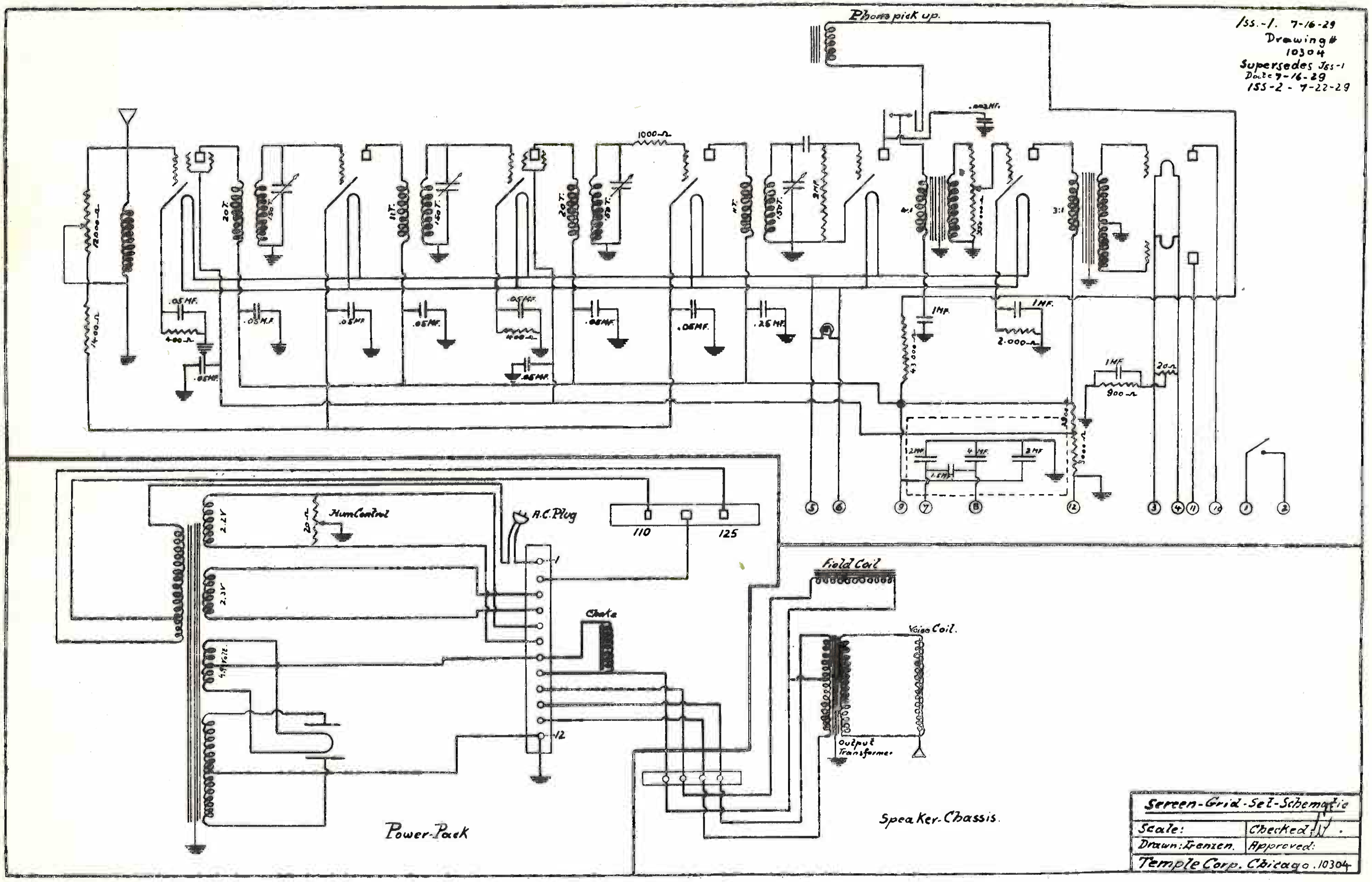

UNITED REPRODUCERS CORP.

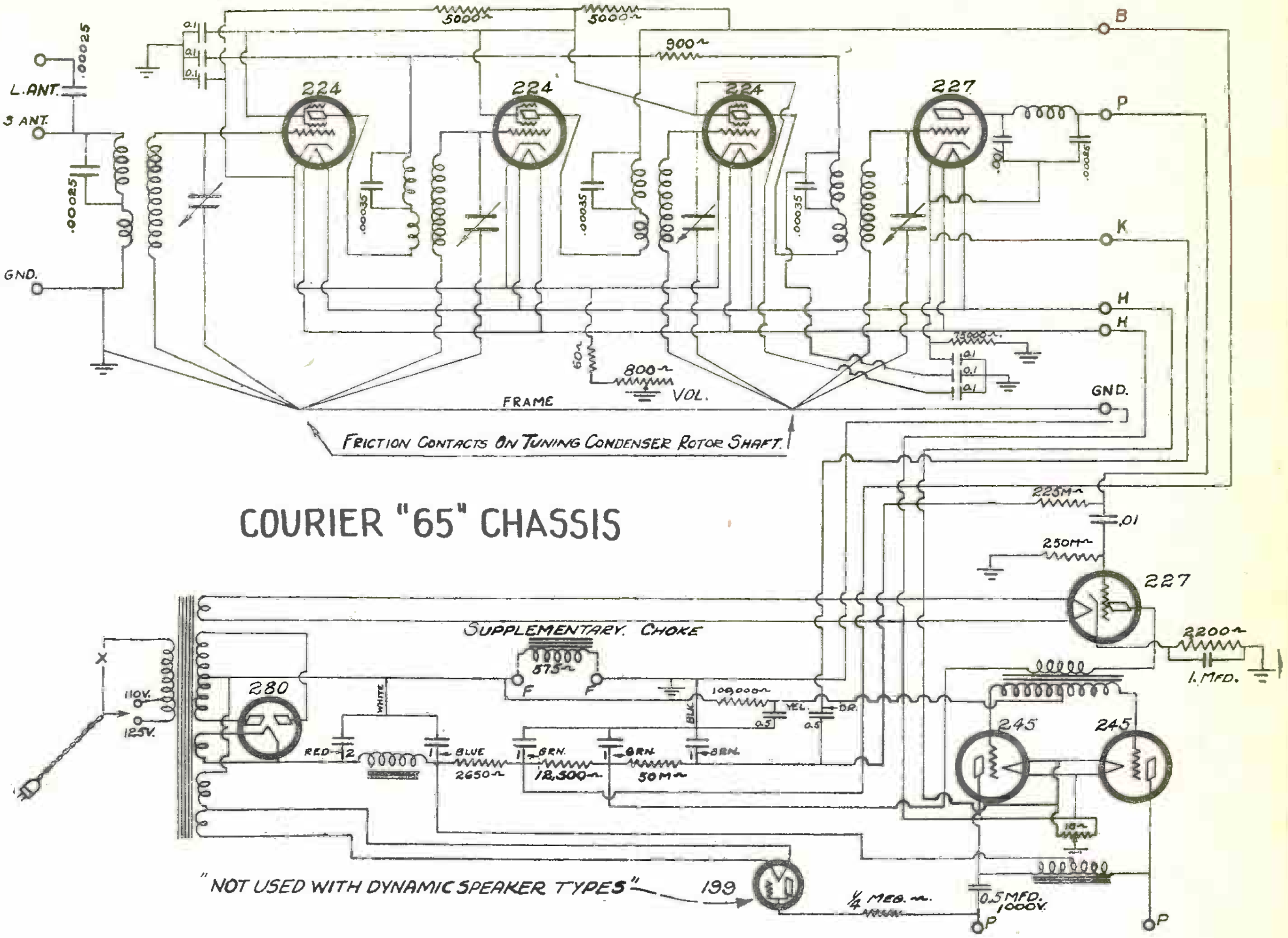

COURIER "65" CHASSIS

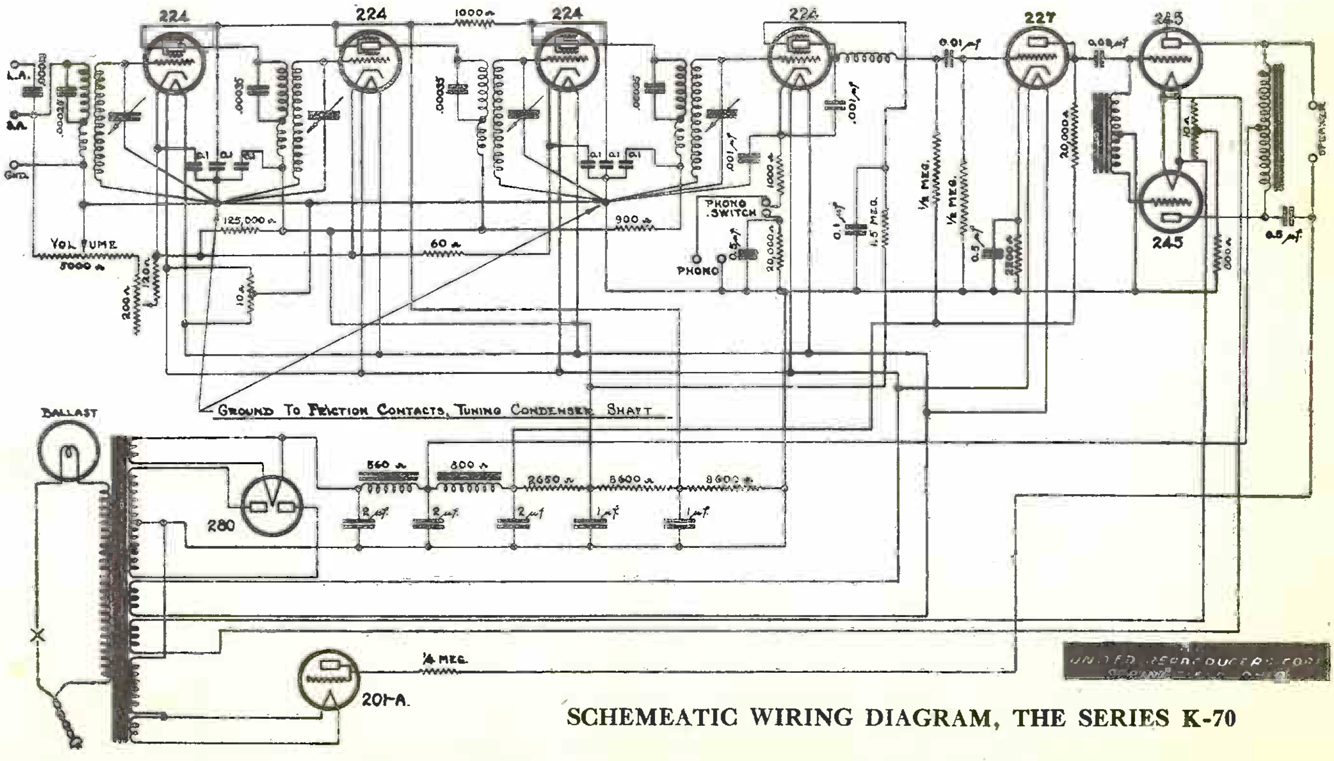

SCHEMEATIC WIRING DIAGRAM, THE SERIES K-70

UNITED REPRODUCERS CORP.

SERIES-20-ELECTROSTATIC

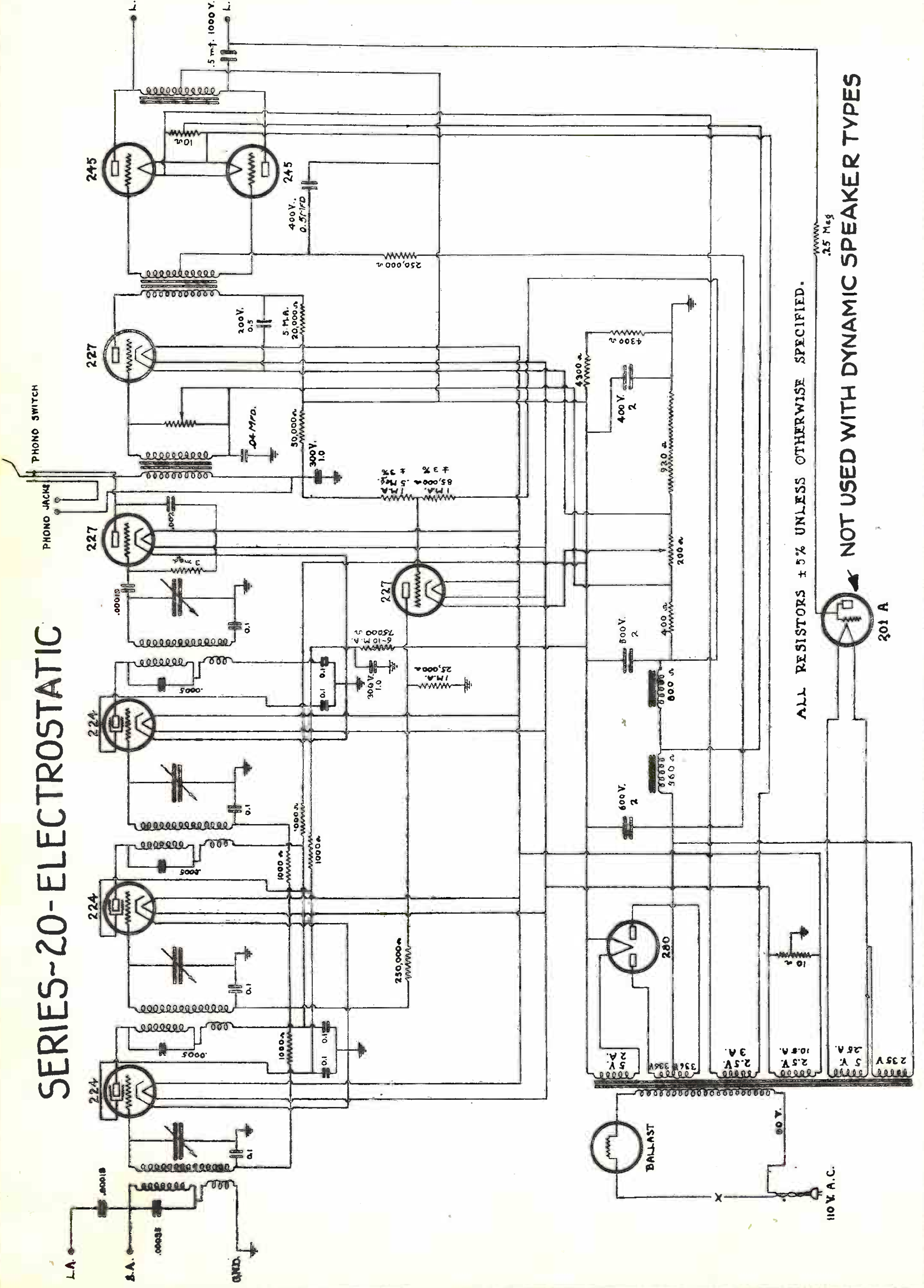

ALL RESISTORS ± 5% UNLESS OTHERWISE SPECIFIED.

NOT USED WITH DYNAMIC SPEAKER TYPES

U.S. RADIO & TELEVISION CO.

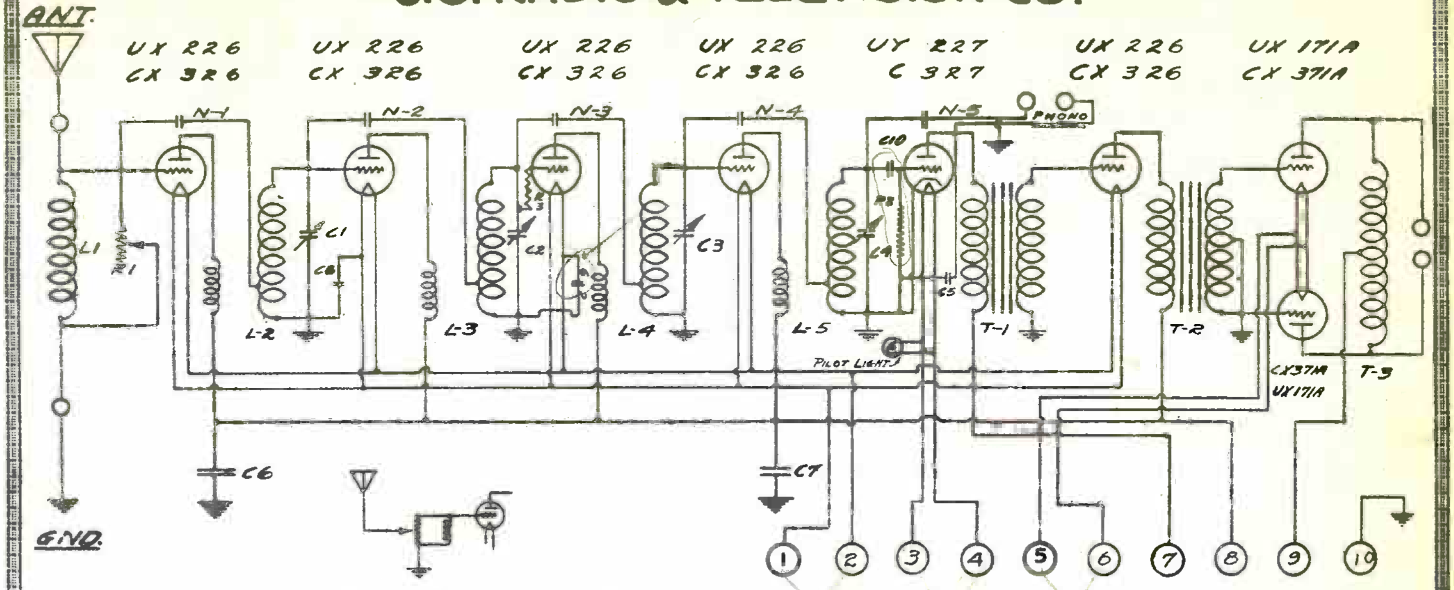

ALL MODELS WITH SERIAL NUMBERS ABOVE 5050 WILL HAVE THIS VOLUME CONTROL. -NOTE REFERS ONLY TO 80R

26 27 71A

MODEL 80

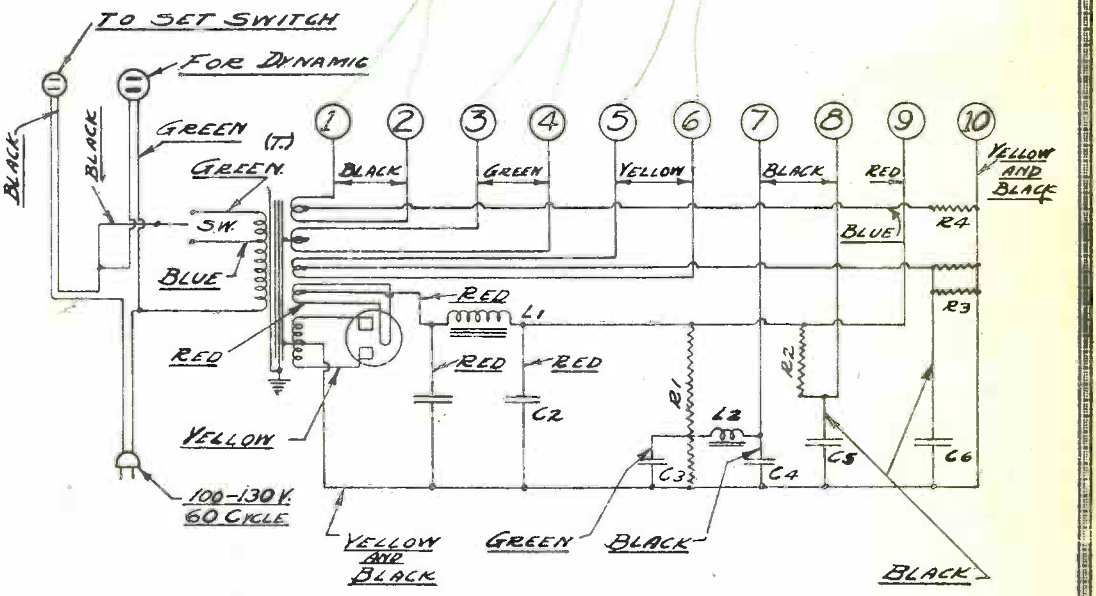

APEX 48~60~ 48A-25~

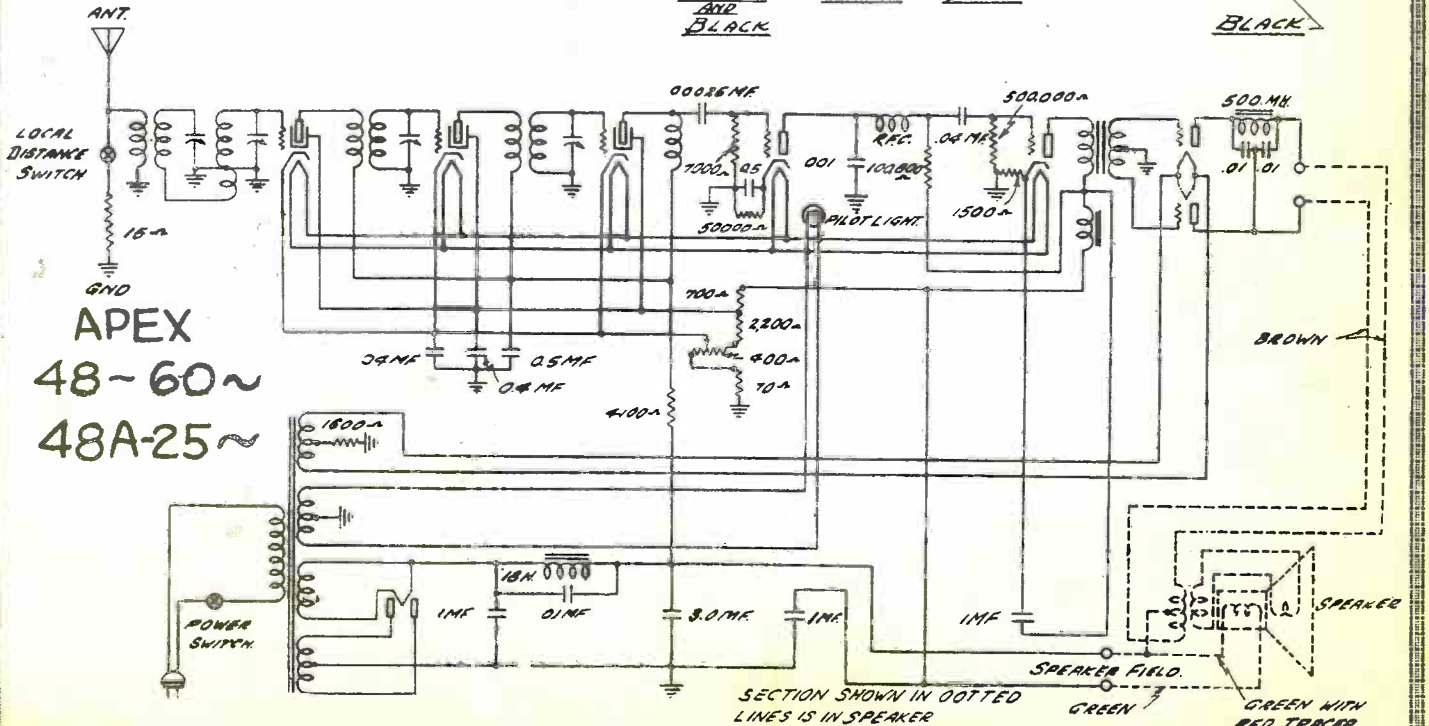

U.S. RADIO & TELEVISION CO.

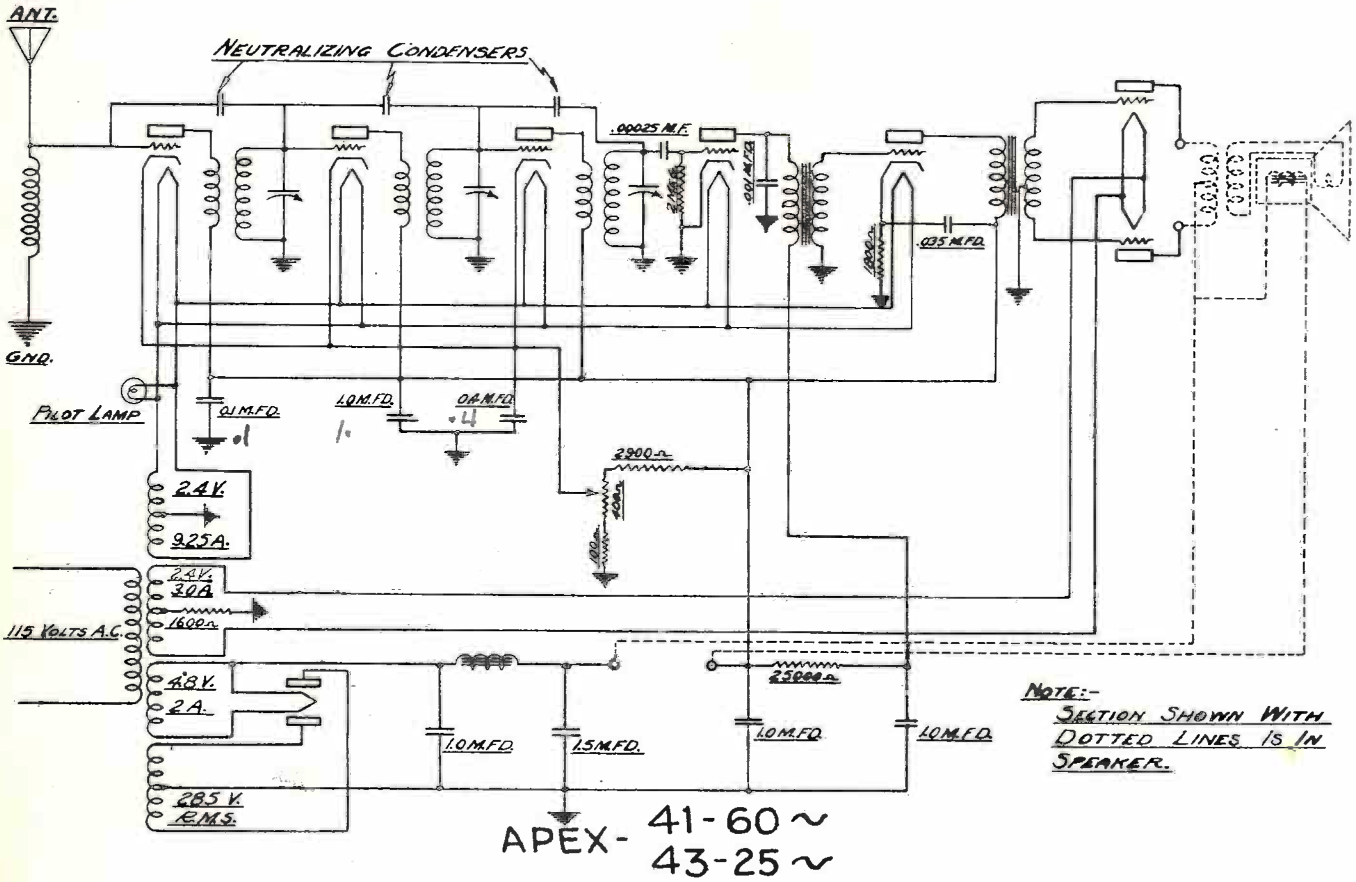

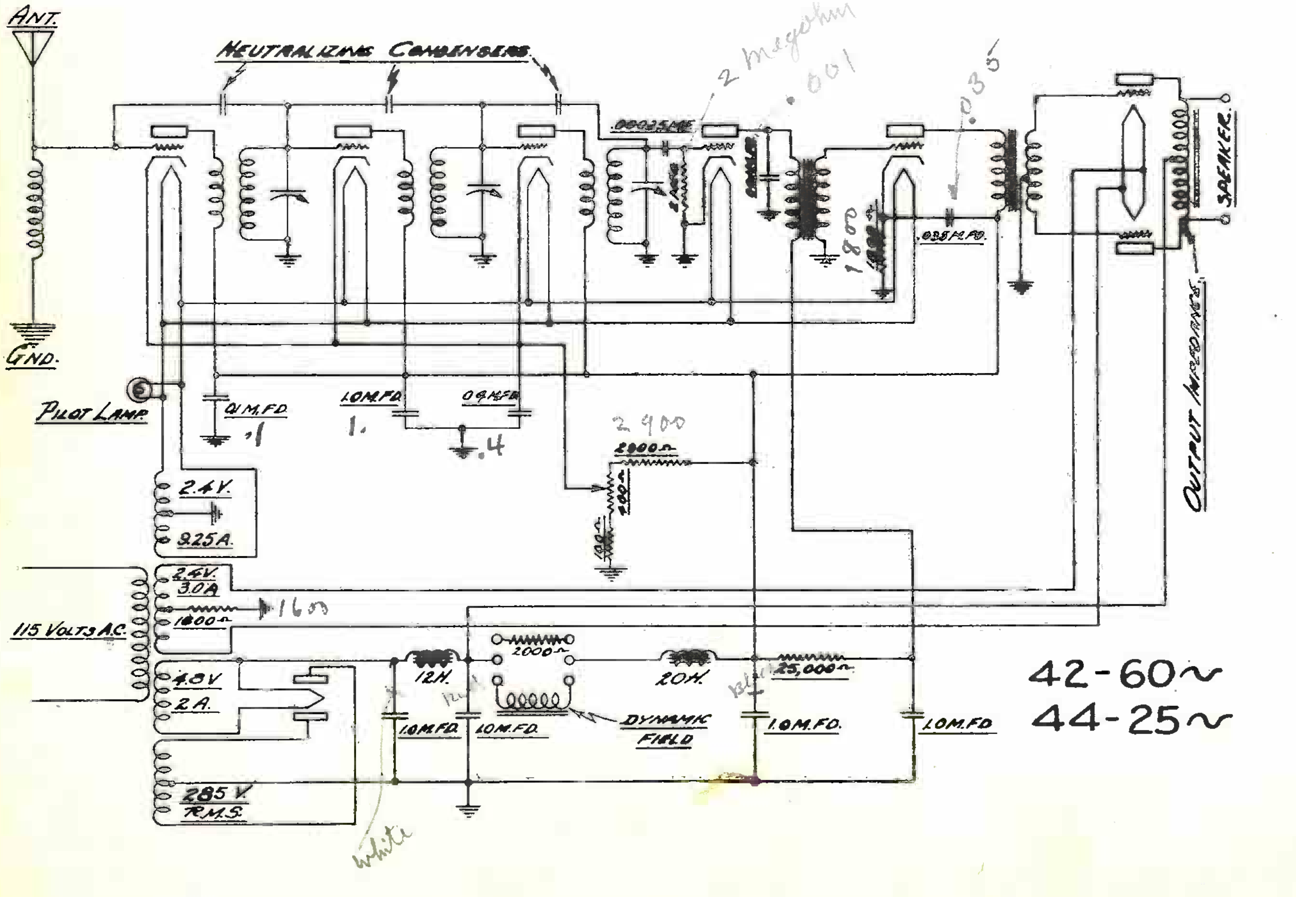

U.S.RADIO & TELEVISION CO.

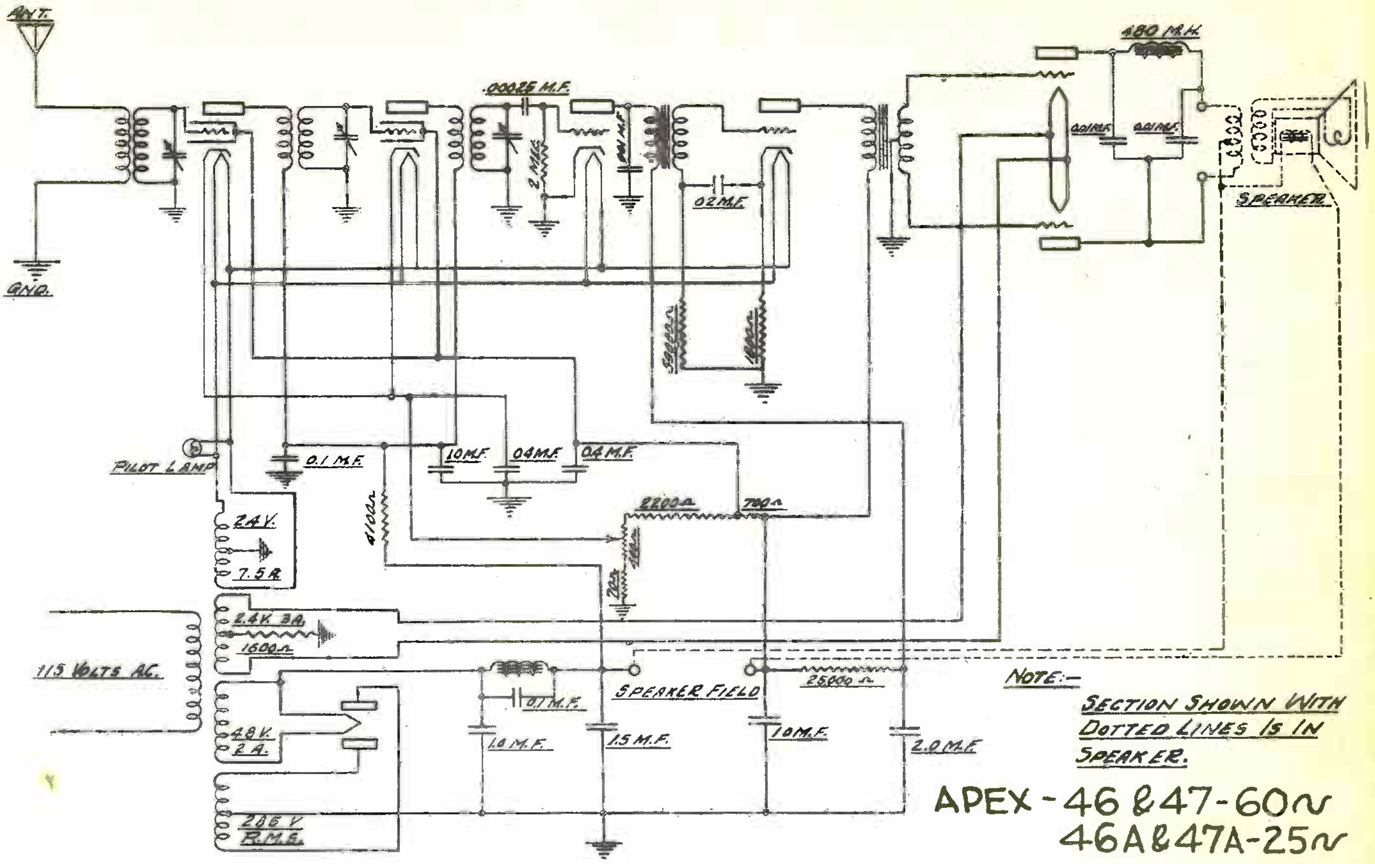

NOTE:- SECTION SHOWN WITH DOTTED LINES IS IN SPEAKER.

APEX - 46 & 47-60~
46A & 47A-25~

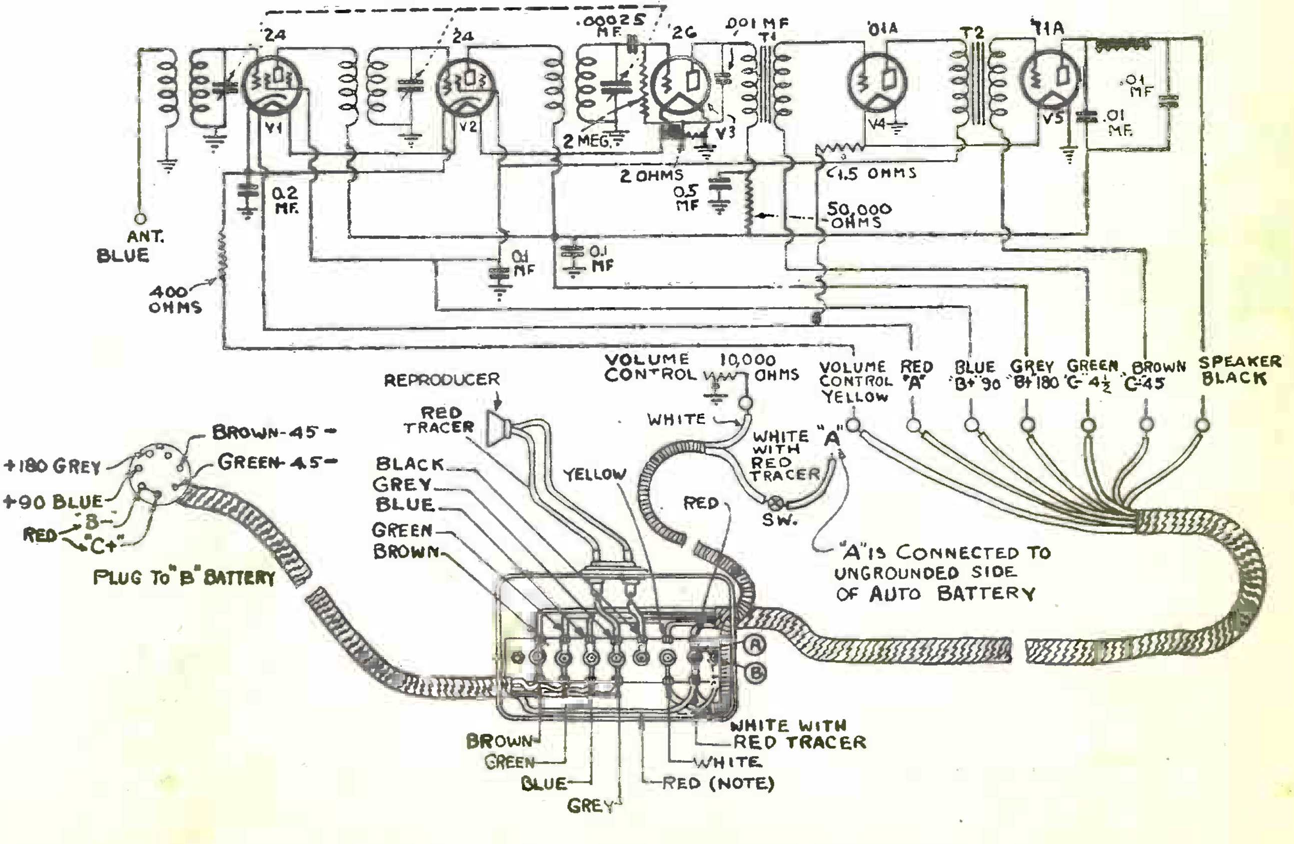

The schematic circuit and wiring connections of the U. S. Radio "Model 30" screen-grid automotive receiver. When the positive side of the car's storage battery is grounded, the red lead connects to terminal "A" of the junction box, from which one side of all voltage readings is then taken. If the battery's negative is grounded, the red lead connects to "ground" on the screw "B" which mounts the junction box.

ZENITH RADIO CORP.

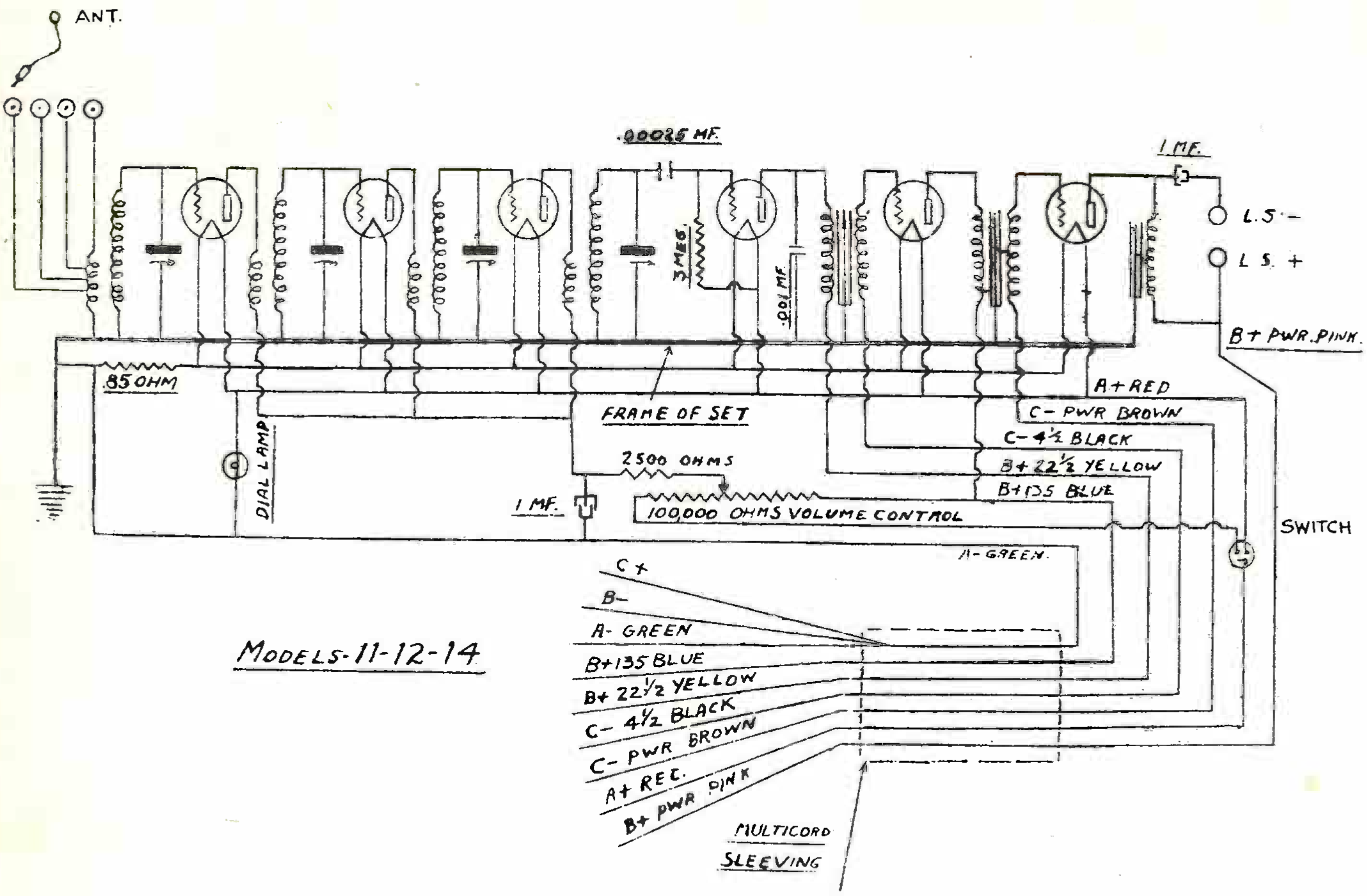

MODELS-11-12-14

MODEL 11E AND 14E ELECTRIC RECEIVERS

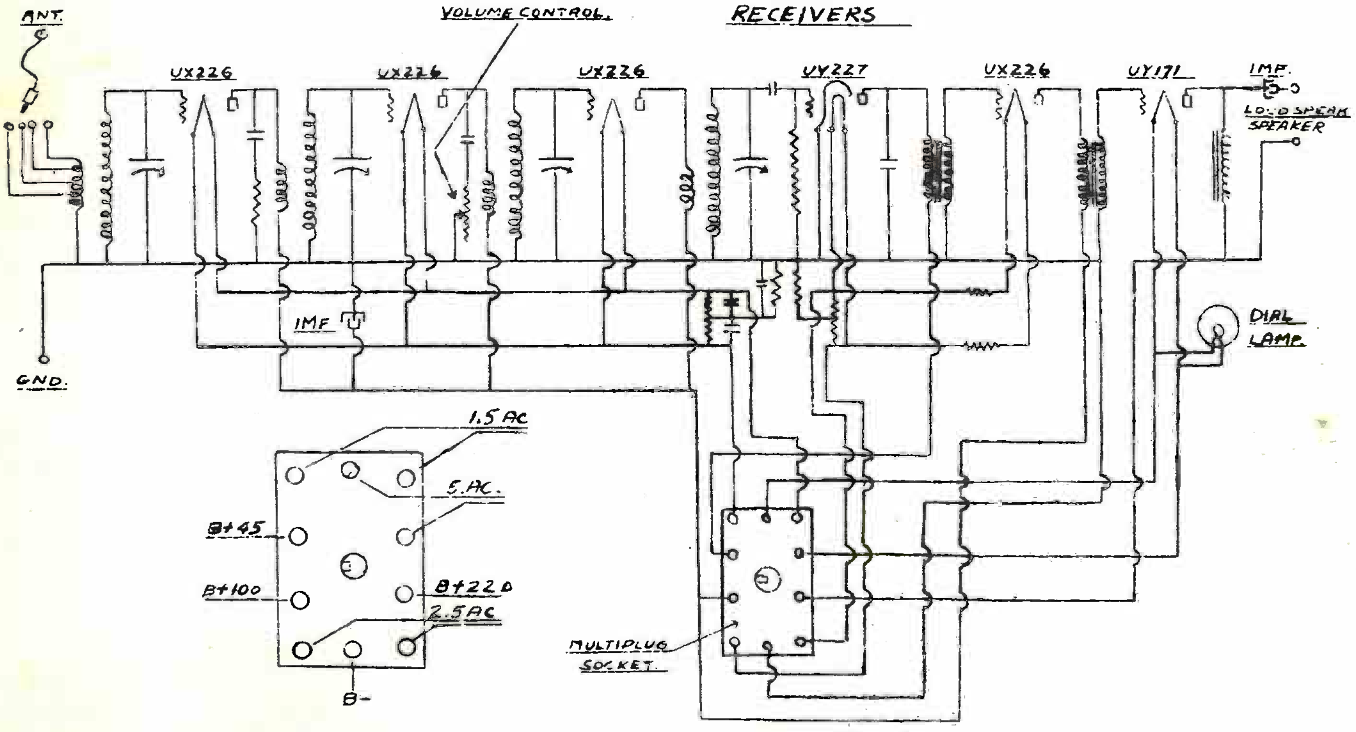

11E FROM 48657 TO 51050

14E FROM 605420 TO 607147.

ZENITH RADIO CORP.

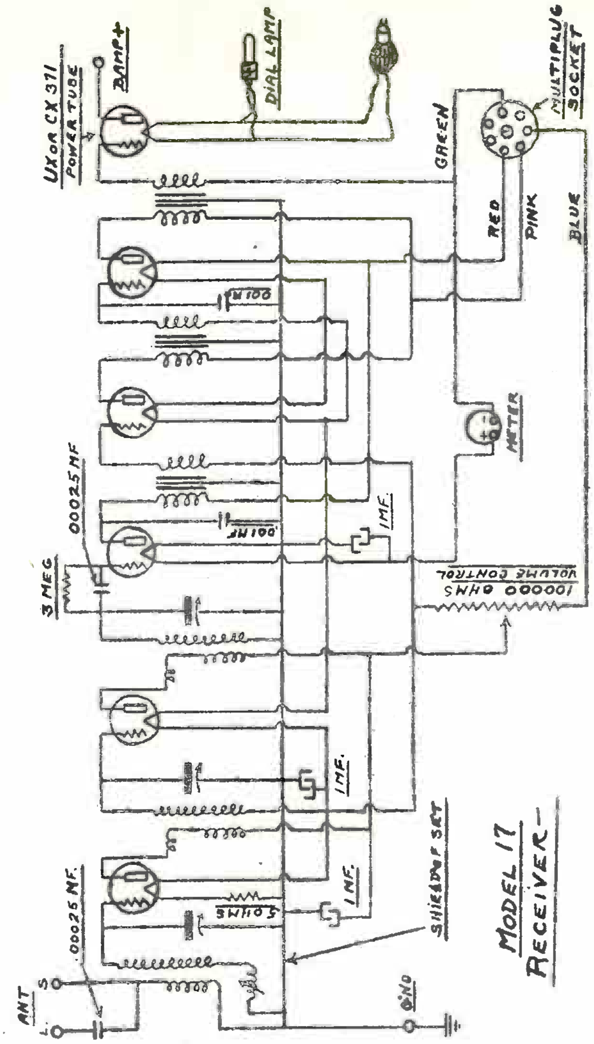

MODEL 17 RECEIVER

Circuit Diagram of Zenith Model 17

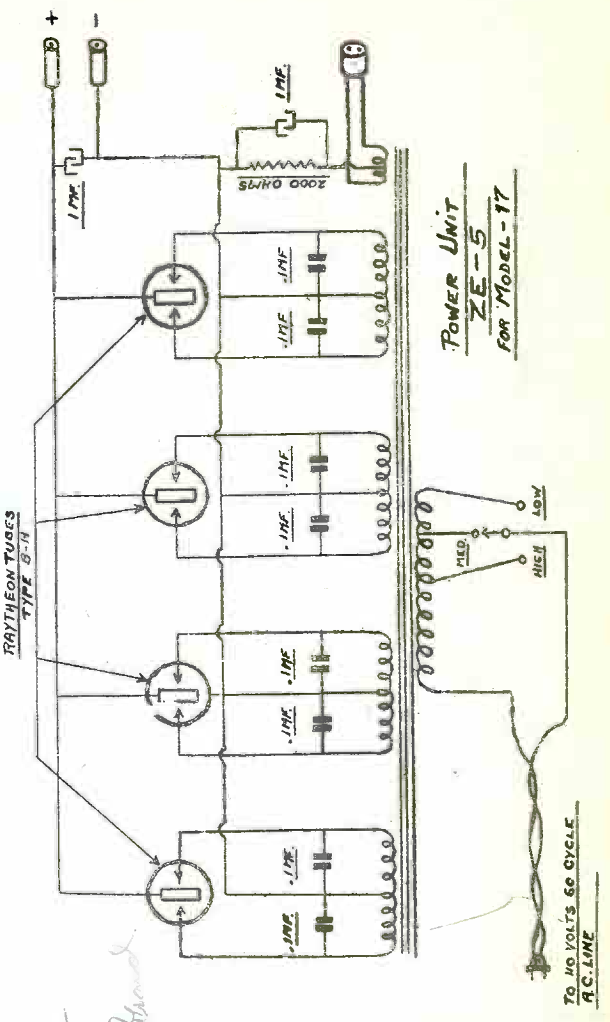

POWER UNIT ZE-5 FOR MODEL 17

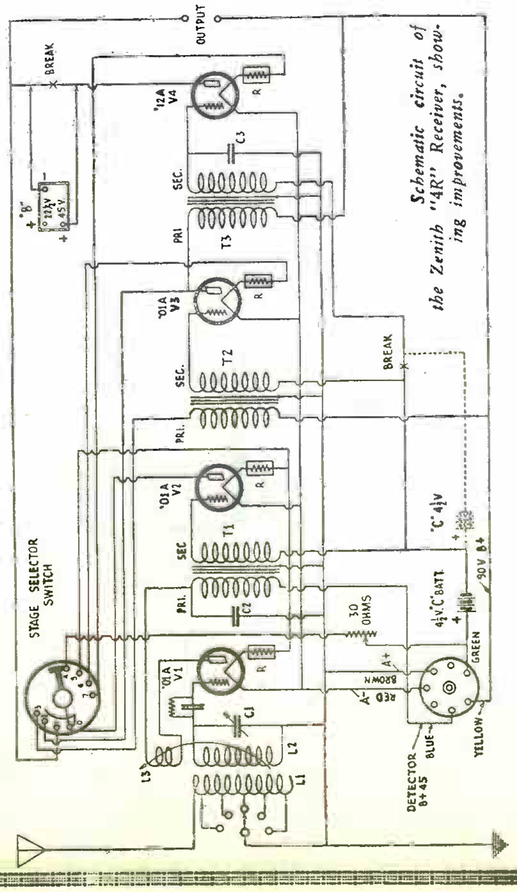

Schematic circuit of the Zenith "4R" Receiver, showing improvements.

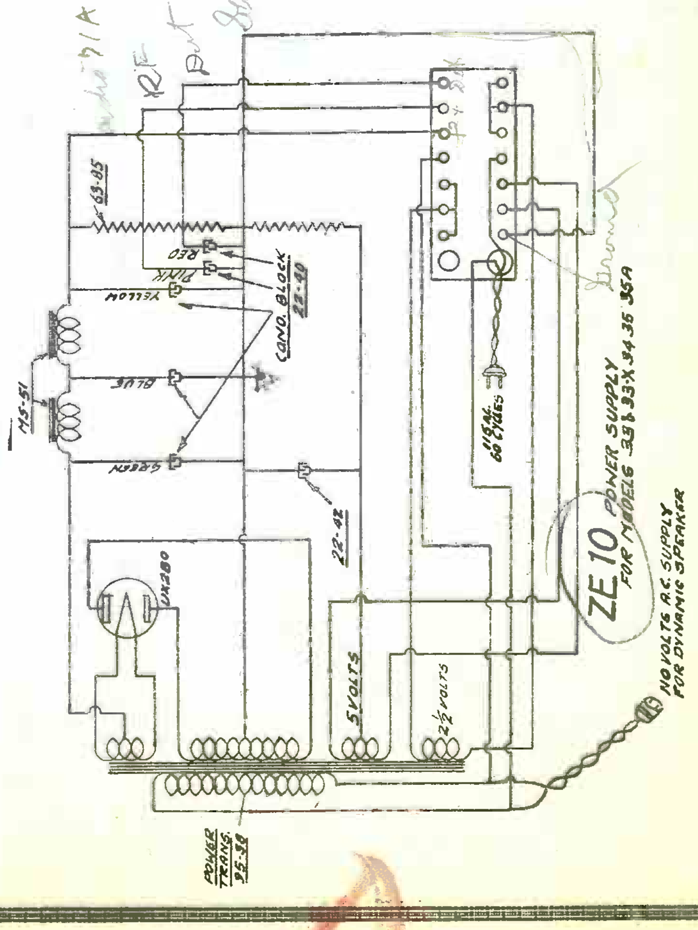

ZE10 POWER SUPPLY FOR MODELS 33 & 33X 34 35 35A

NO VOLTS A.C. SUPPLY FOR DYNAMIC SPEAKER

ZENITH RADIO CORP.

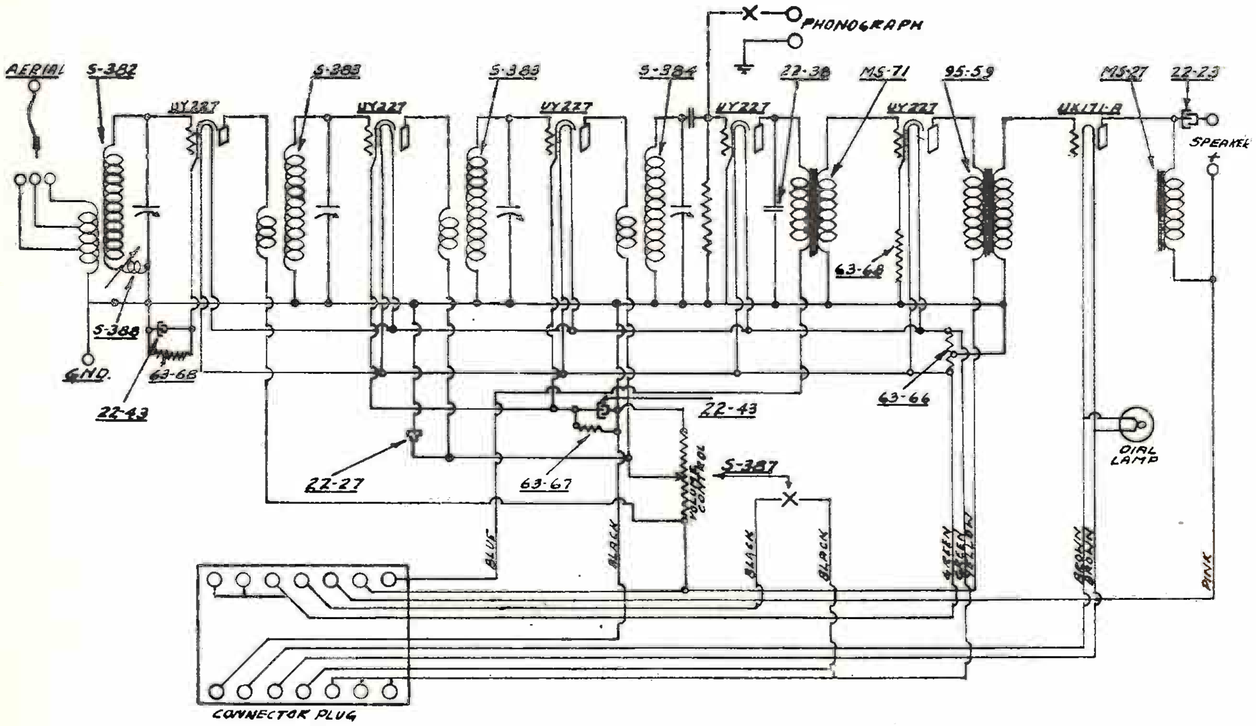

WIRING DIAGRAM
MODELS 33X362X
6 TUBE ELECTRIC SET

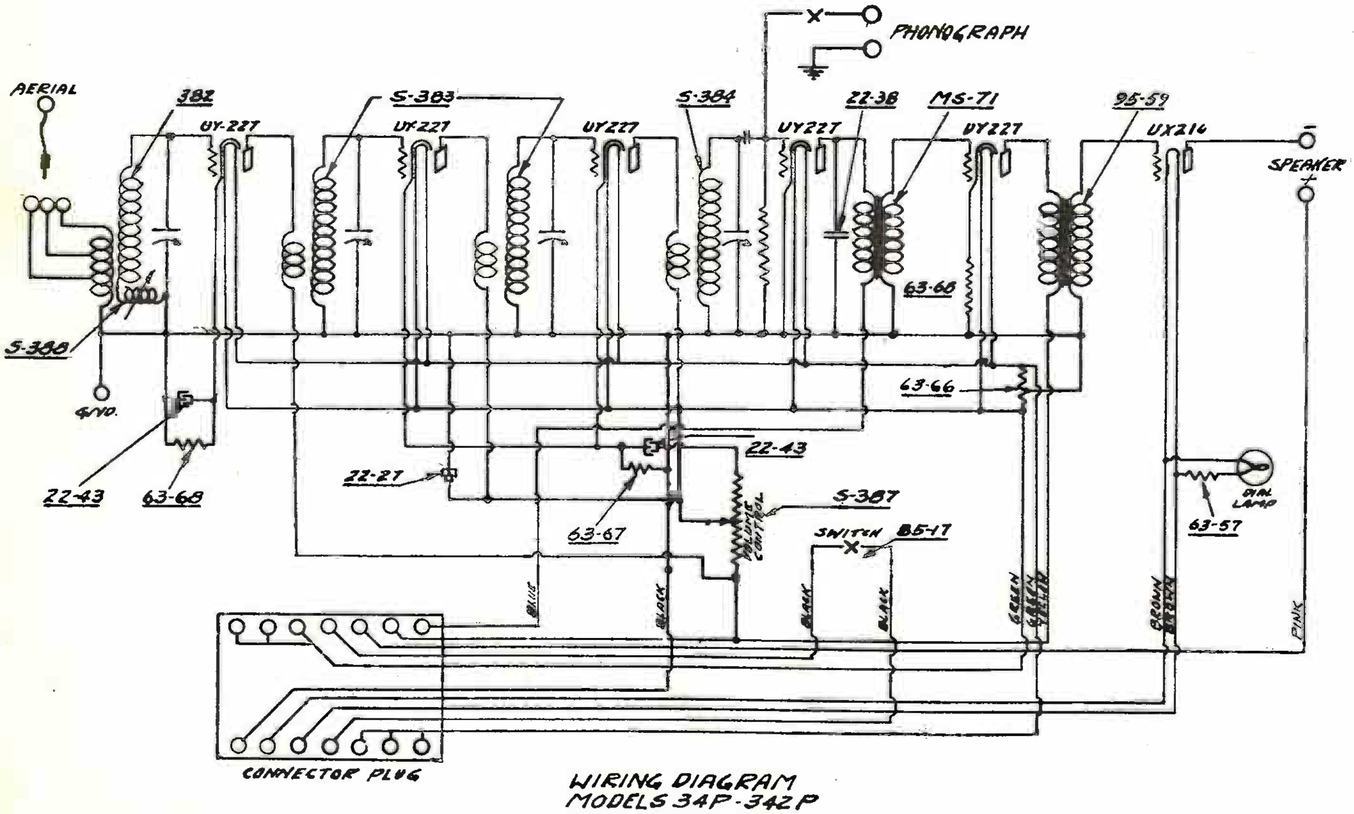

WIRING DIAGRAM
MODELS 34P-342P
6 TUBE ELECTRIC SET

ZENITH RADIO CORP.

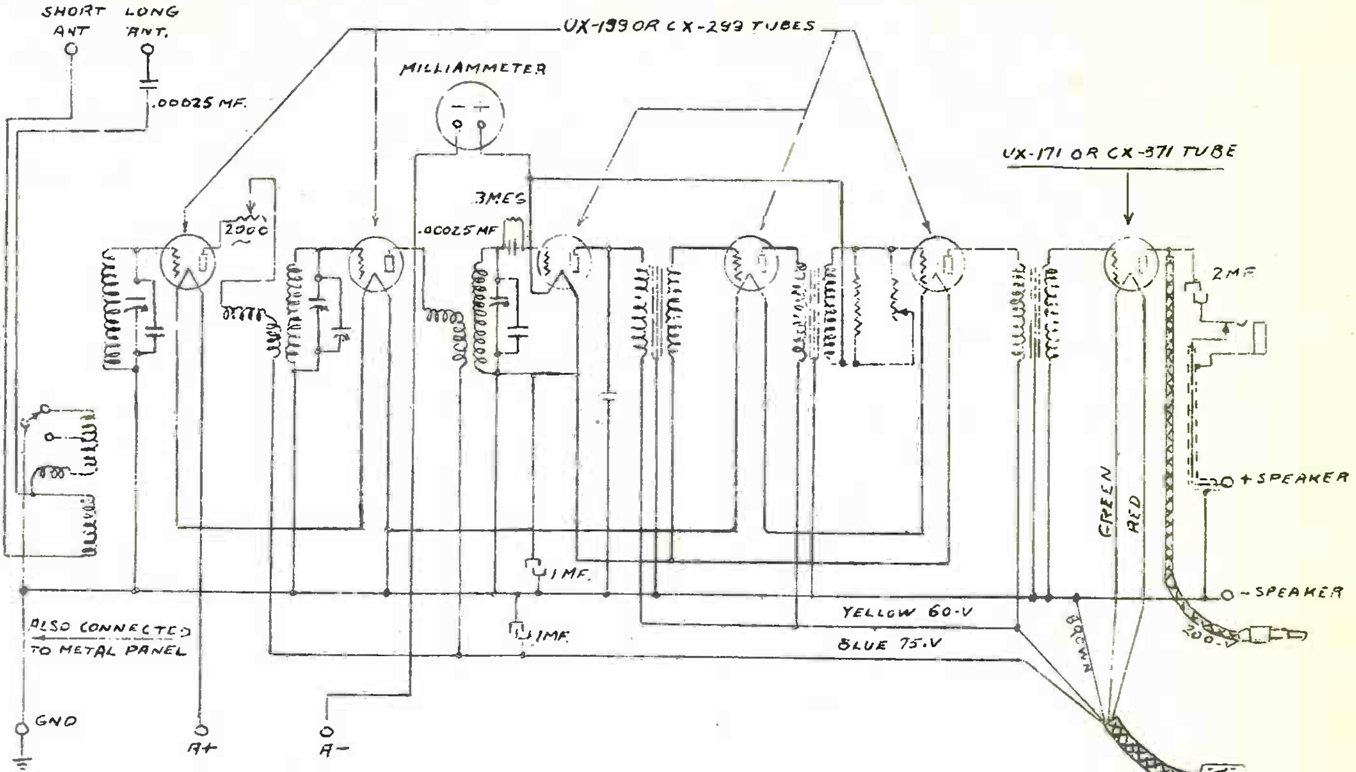

ELECTRIC
SUPER-ZENITH MODEL 27

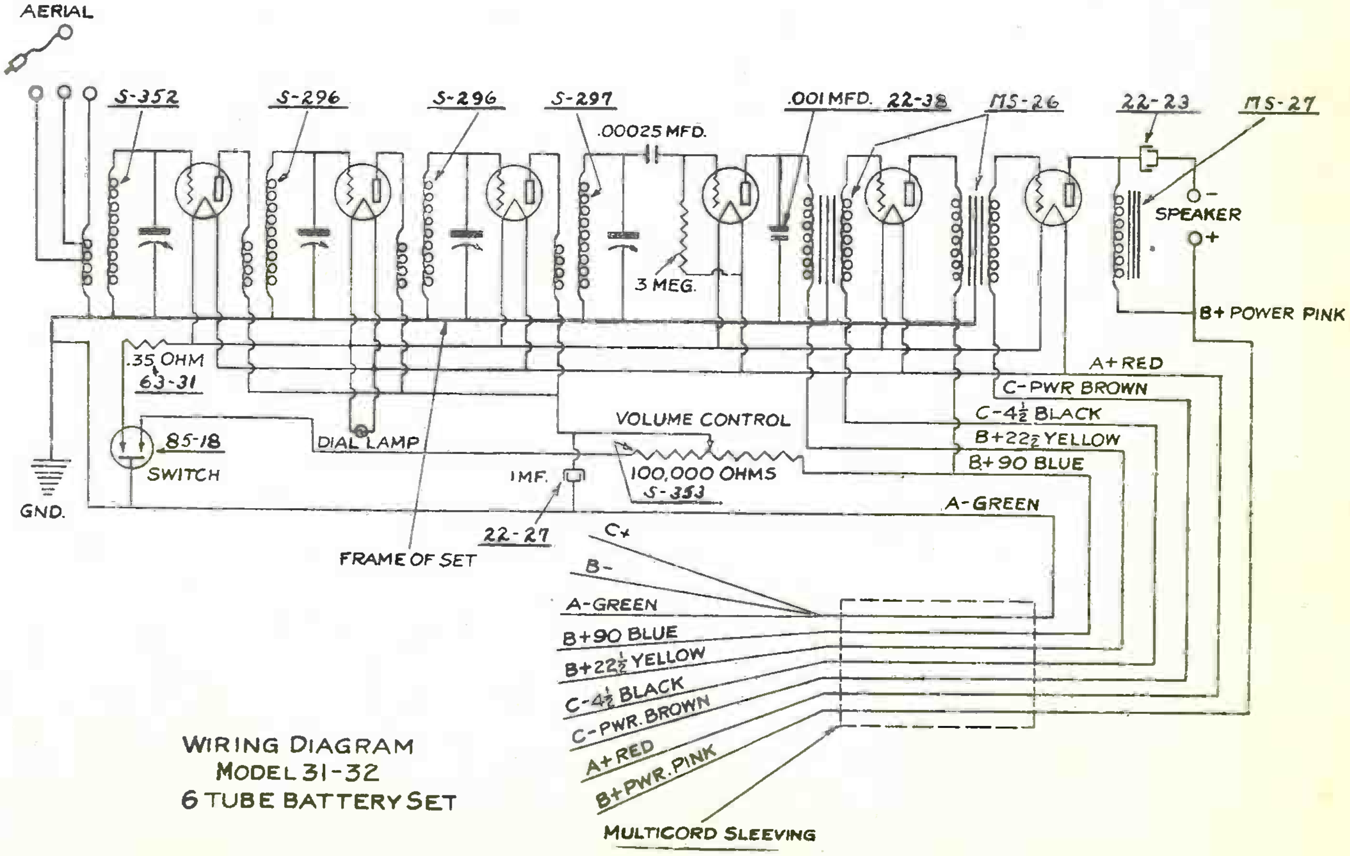

WIRING DIAGRAM
MODEL 31-32
6 TUBE BATTERY SET

ZENITH RADIO CORP.

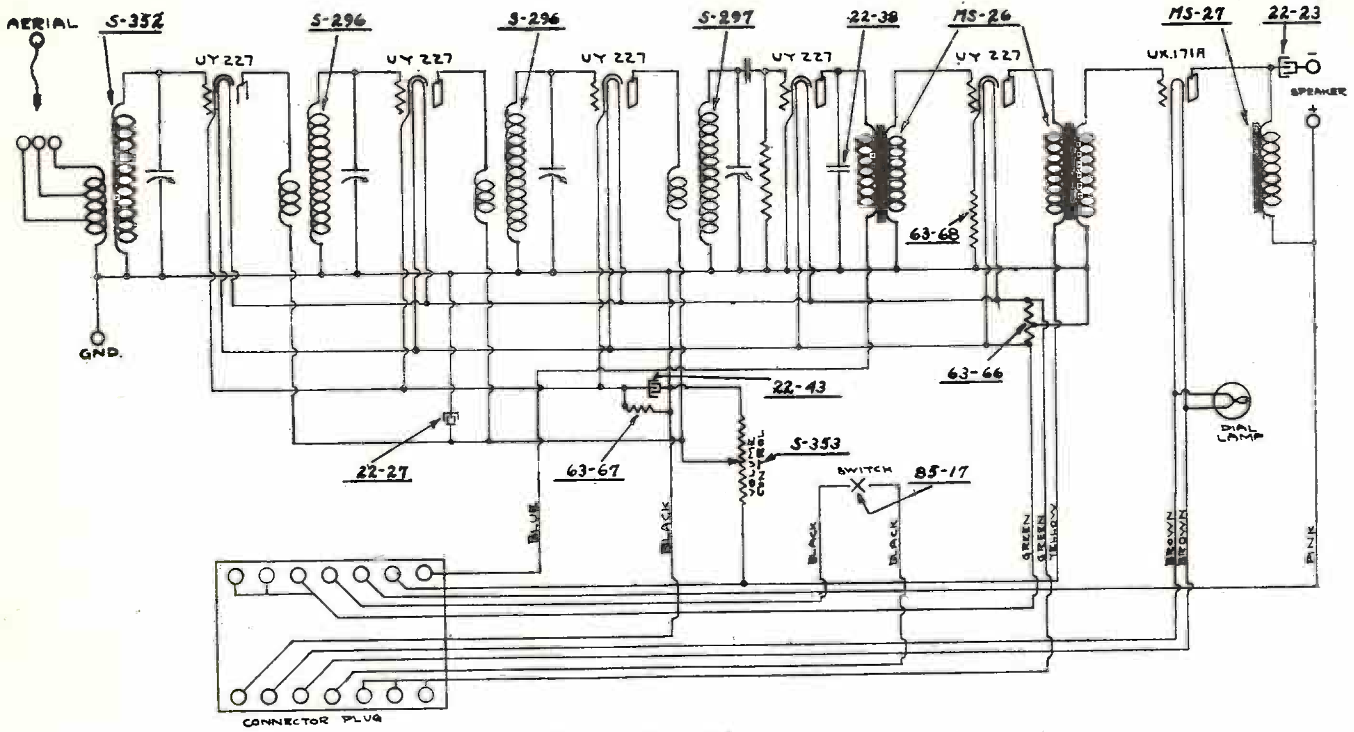

WIRING DIAGRAM
MODELS 33-34-35-35A-342-352-352A-362
6 TUBE ELECTRIC SET

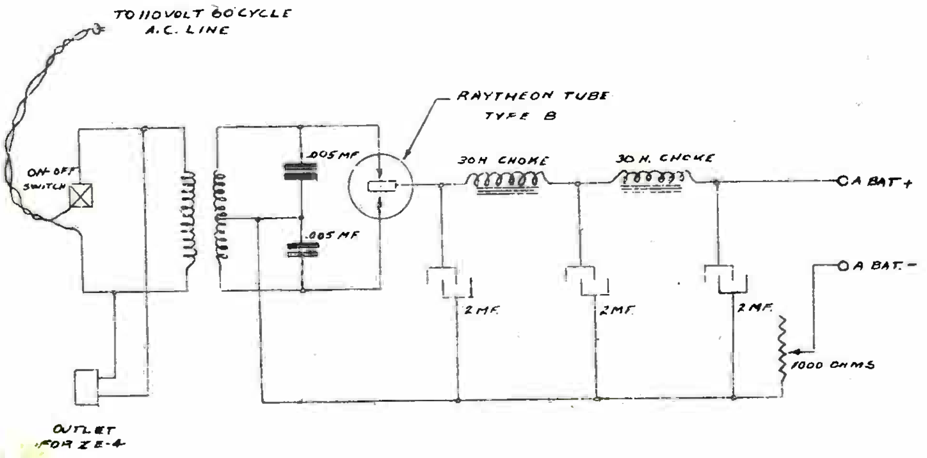

ZE-3 A-POWER SUPPLY

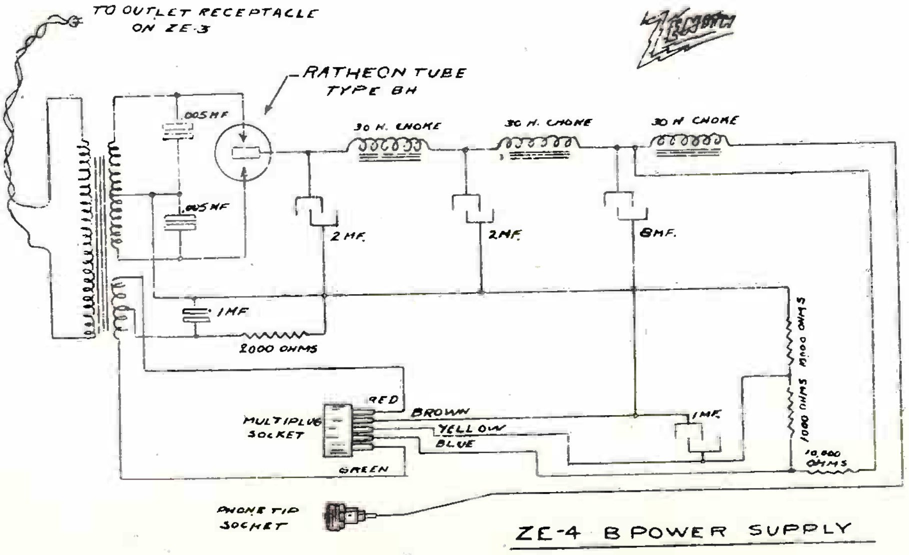

ZE-4 B POWER SUPPLY

ZENITH RADIO CORP.

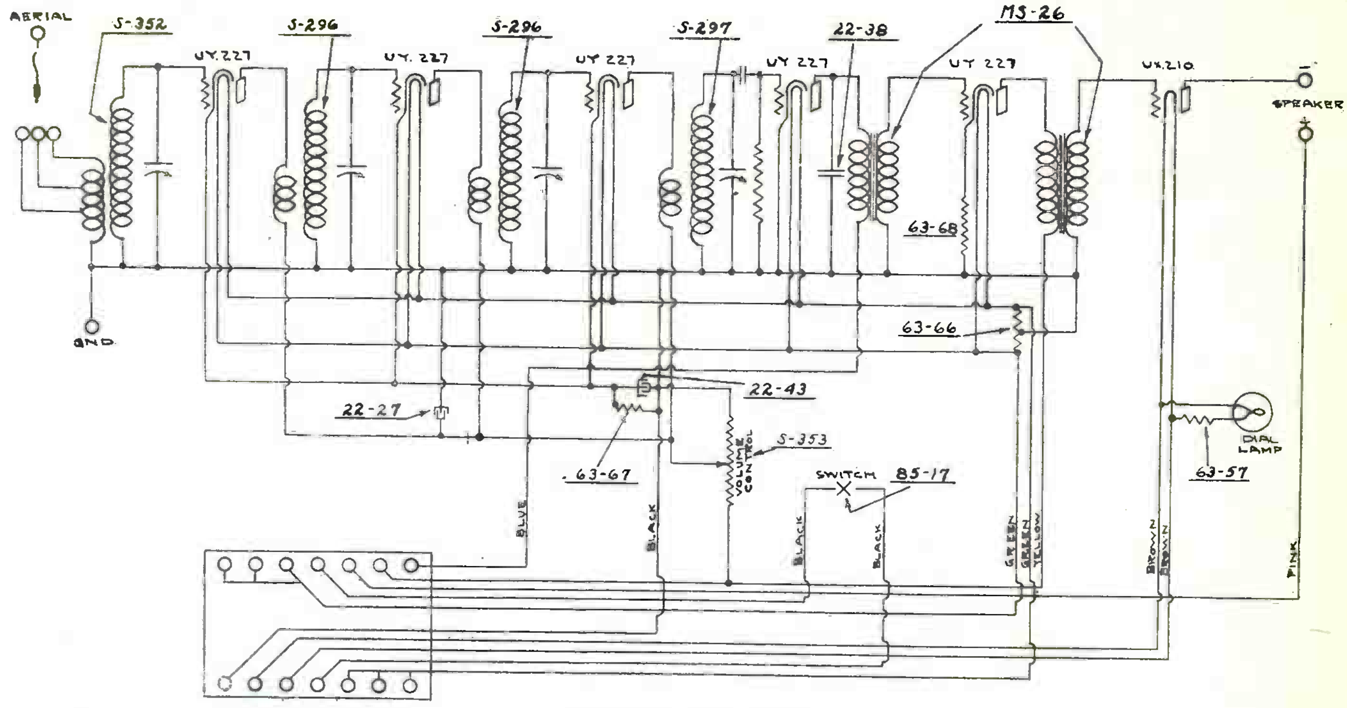

WIRING DIAGRAM
MODELS 35P-35AP-352P-352AP
6 TUBE ELECTRIC SET

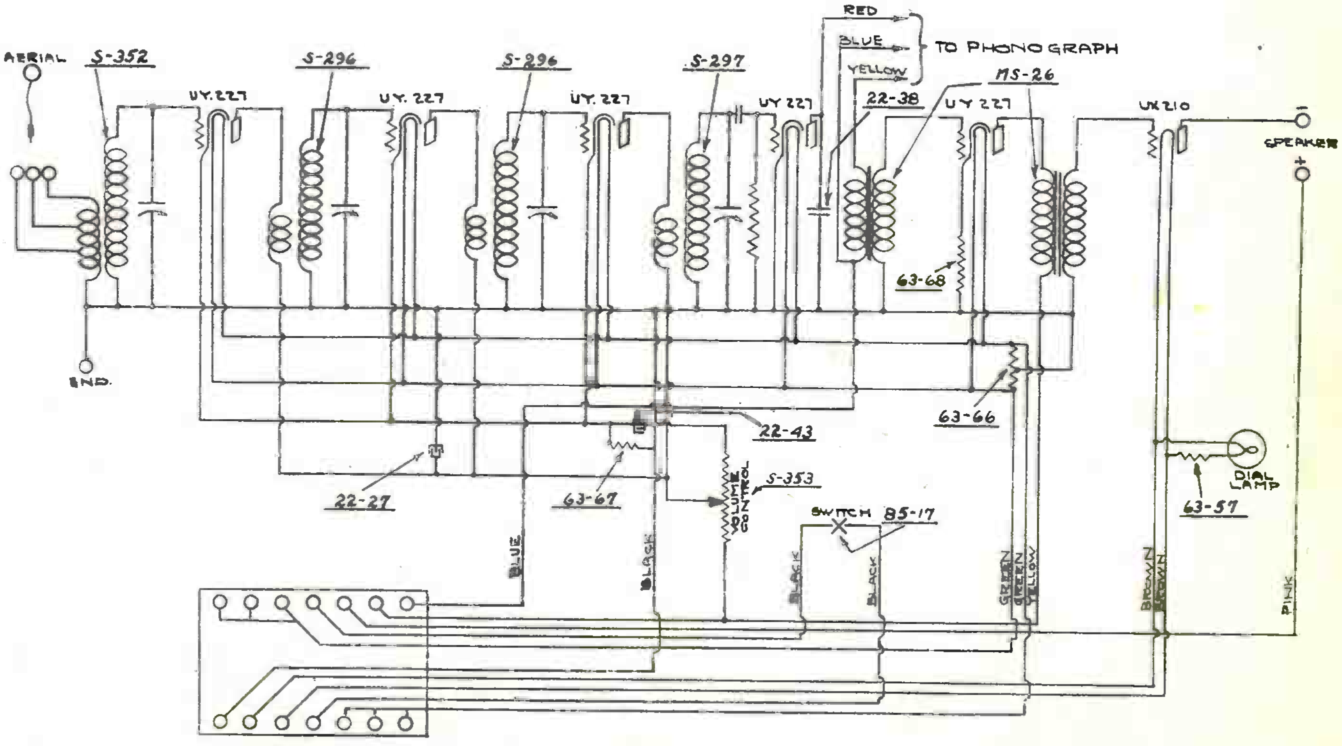

WIRING DIAGRAM
MODEL 37A
6 TUBE ELECTRIC SET

27 Rx

ZENITH RADIO CORP.

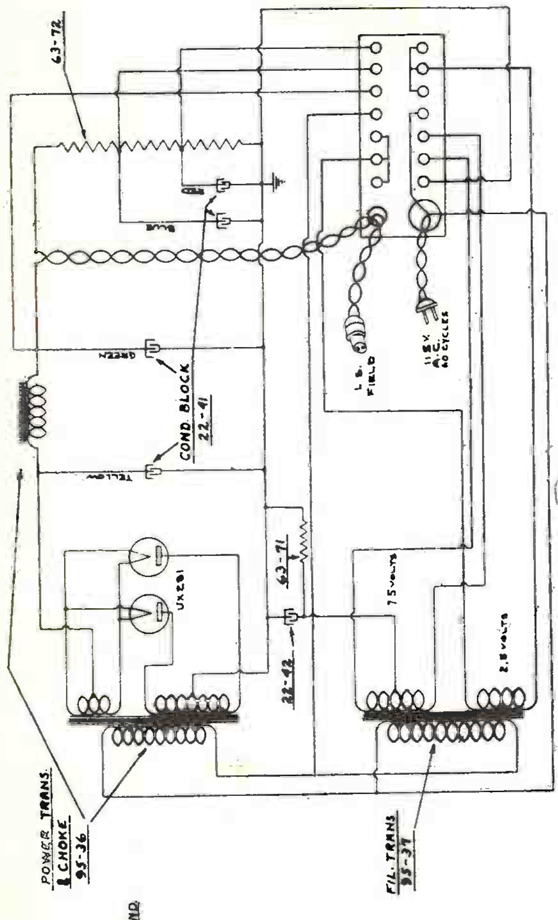

ZE 11 POWER SUPPLY FOR MODELS 35P-35AP-37A

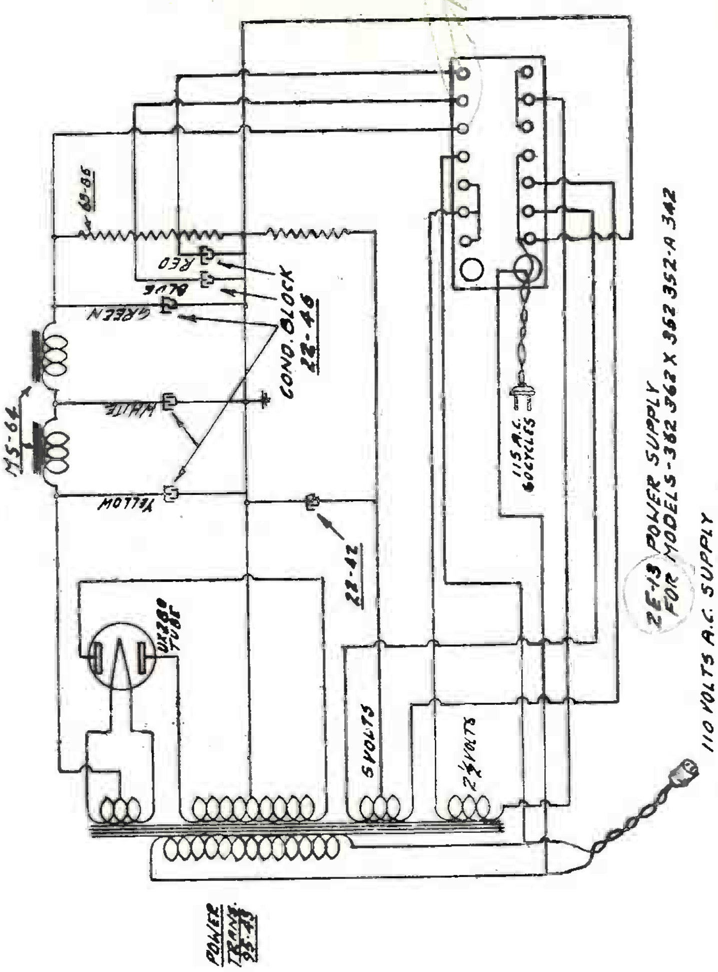

ZE-13 POWER SUPPLY FOR MODELS-362 362X 362 352-A 342

110 VOLTS A.C. SUPPLY FOR DYNAMIC SPEAKER

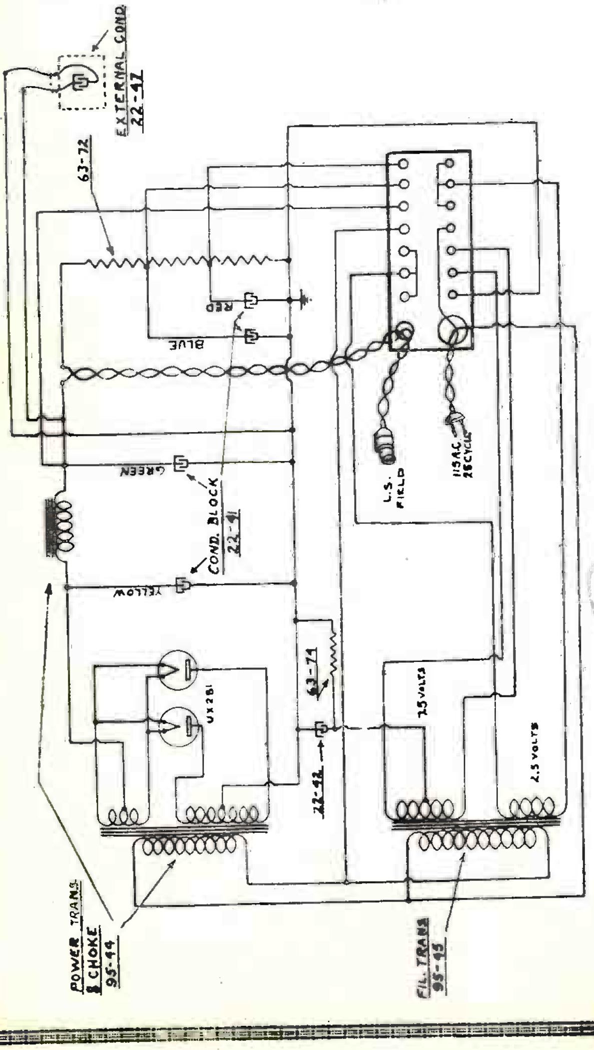

ZE 14 POWER SUPPLY FOR MODELS 352P-352AP

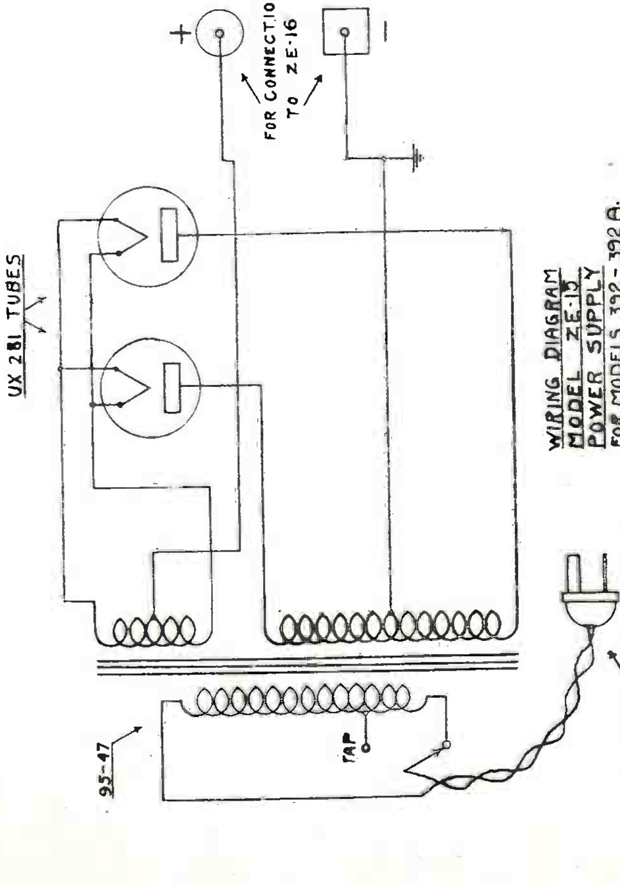

WIRING DIAGRAM MODEL ZE-15 POWER SUPPLY FOR MODELS 392-392A.

ZENITH RADIO CORP.

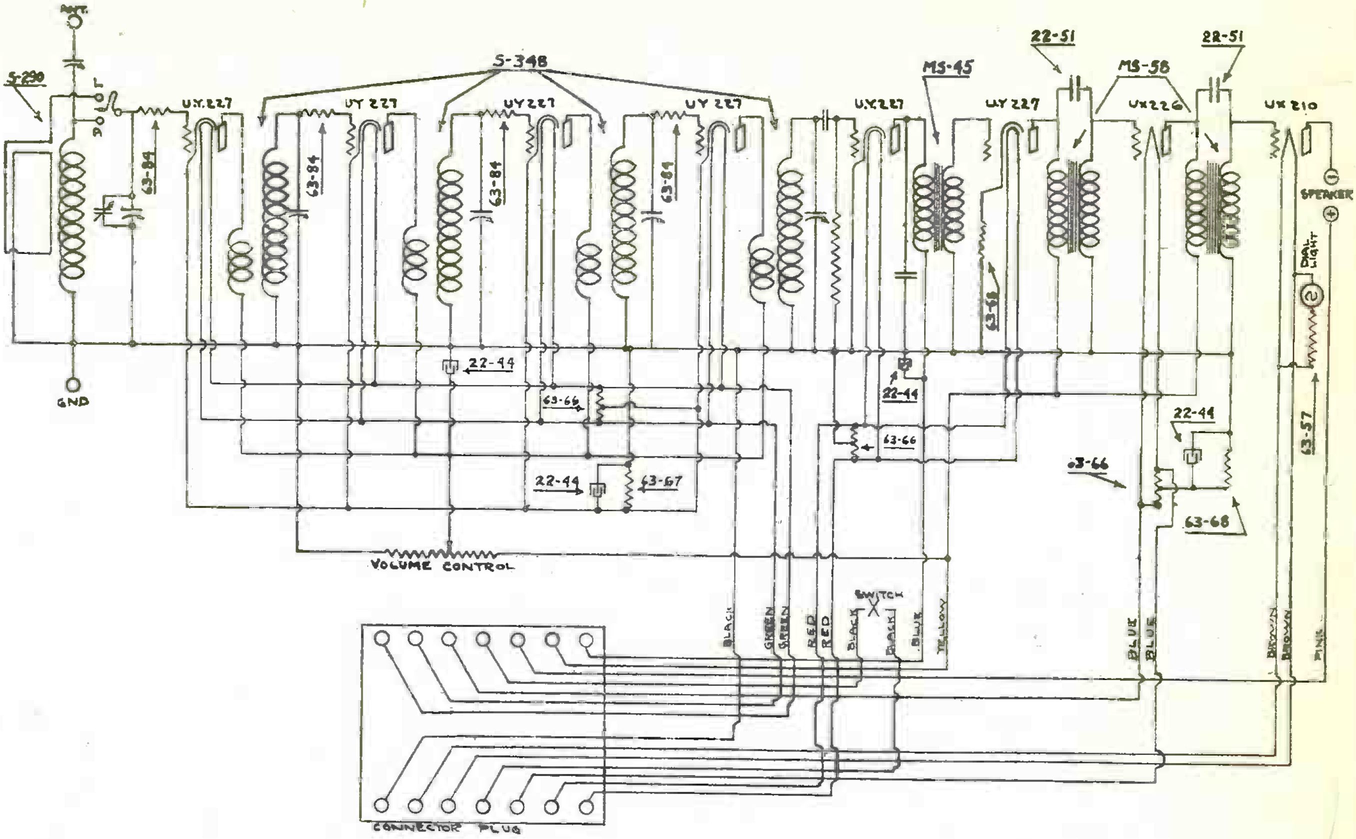

WIRING DIAGRAM
MODELS 39-39 A-392-392A

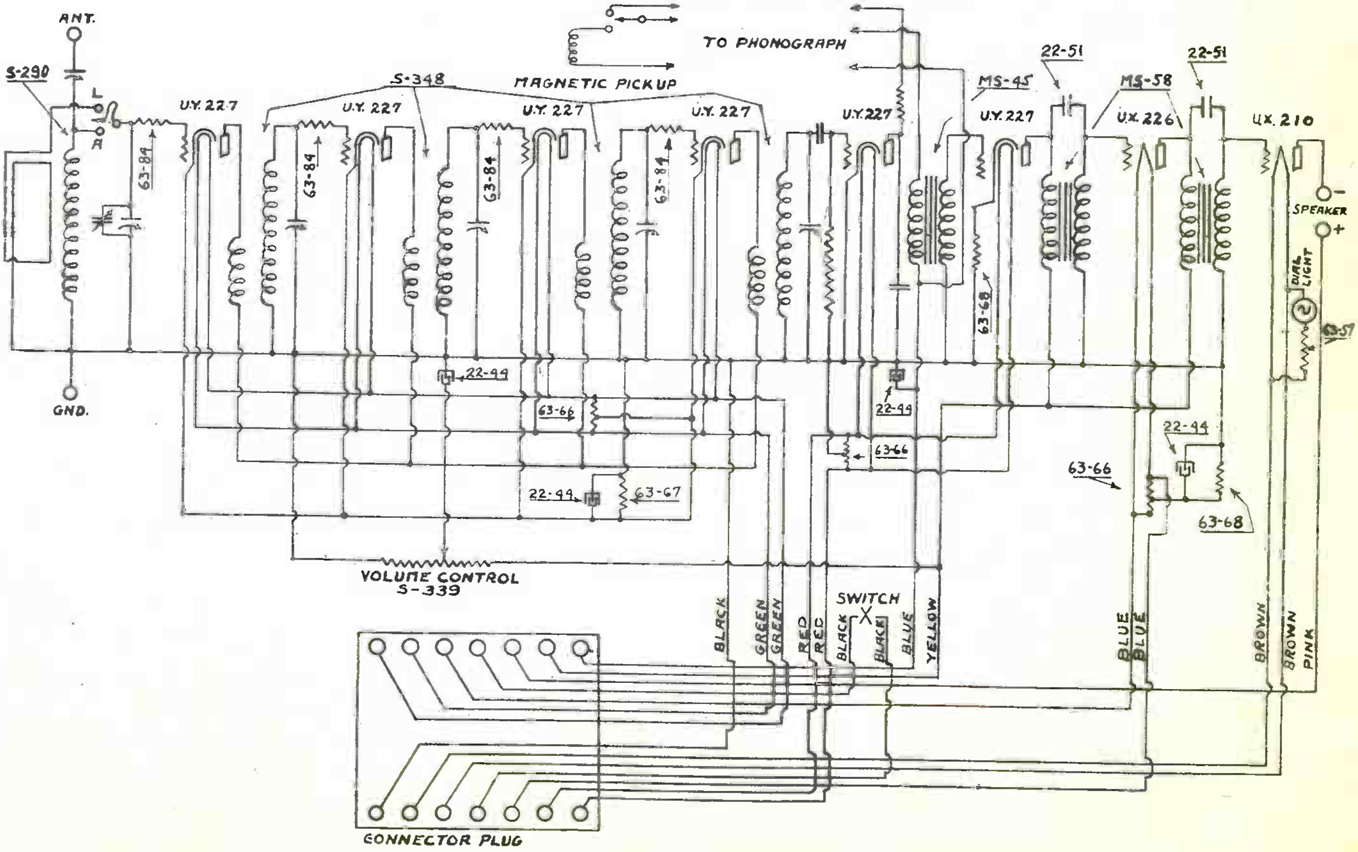

WIRING DIAGRAM
MODEL 40A

ZENITH RADIO CORP.

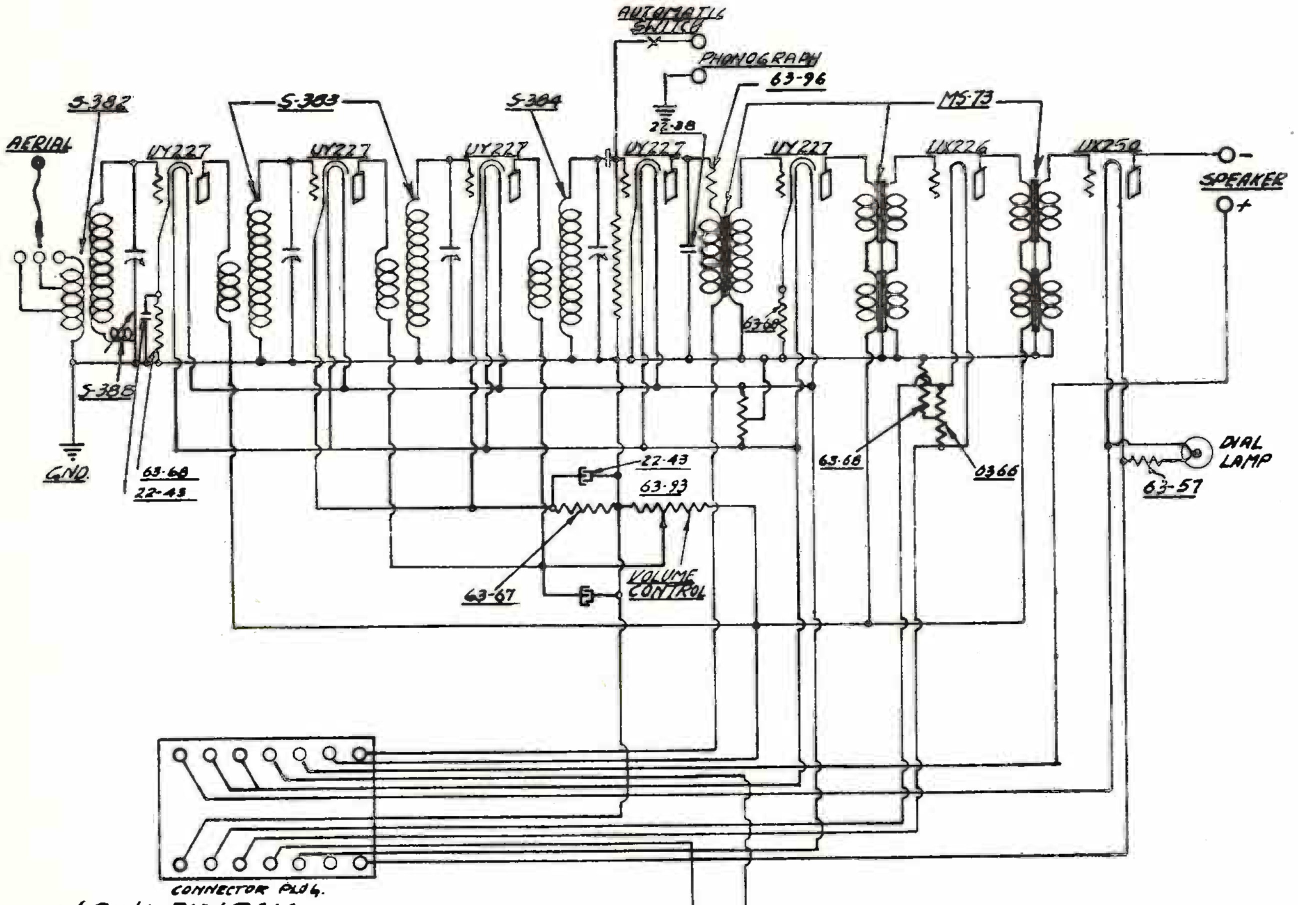

WIRING DIAGRAM
MODELS 35PX 35APX 352PX 352APX 37-A

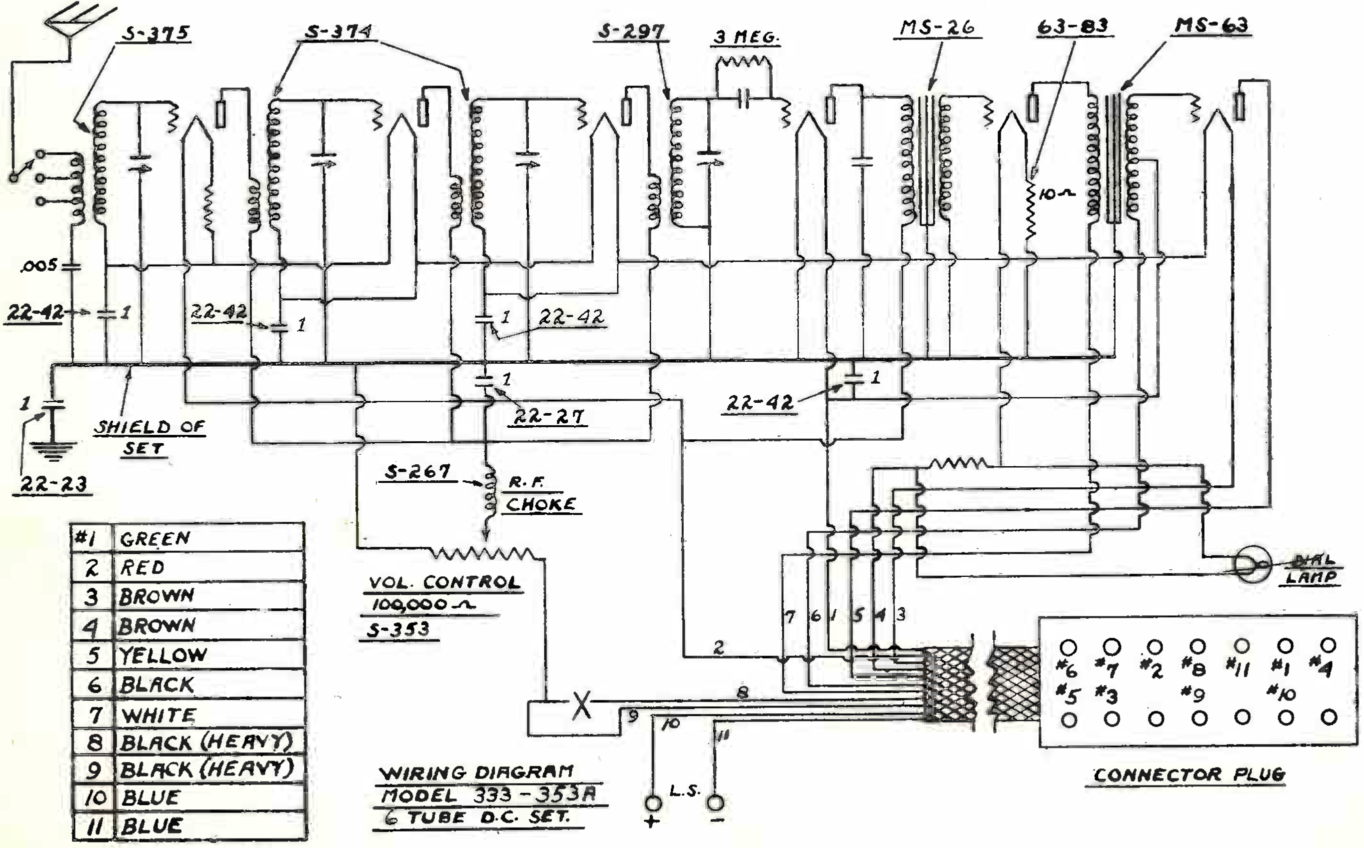

#1	GREEN
2	RED
3	BROWN
4	BROWN
5	YELLOW
6	BLACK
7	WHITE
8	BLACK (HEAVY)
9	BLACK (HEAVY)
10	BLUE
11	BLUE

WIRING DIAGRAM
MODEL 333-353A
6 TUBE D.C. SET.

ZENITH RADIO CORP.

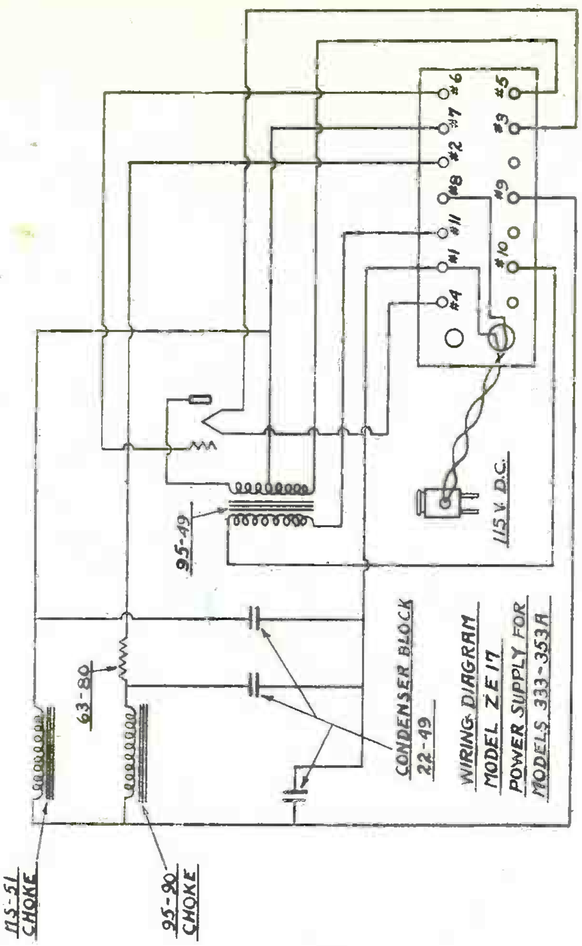

WIRING DIAGRAM MODEL ZE 17 POWER SUPPLY FOR MODELS 333-353A

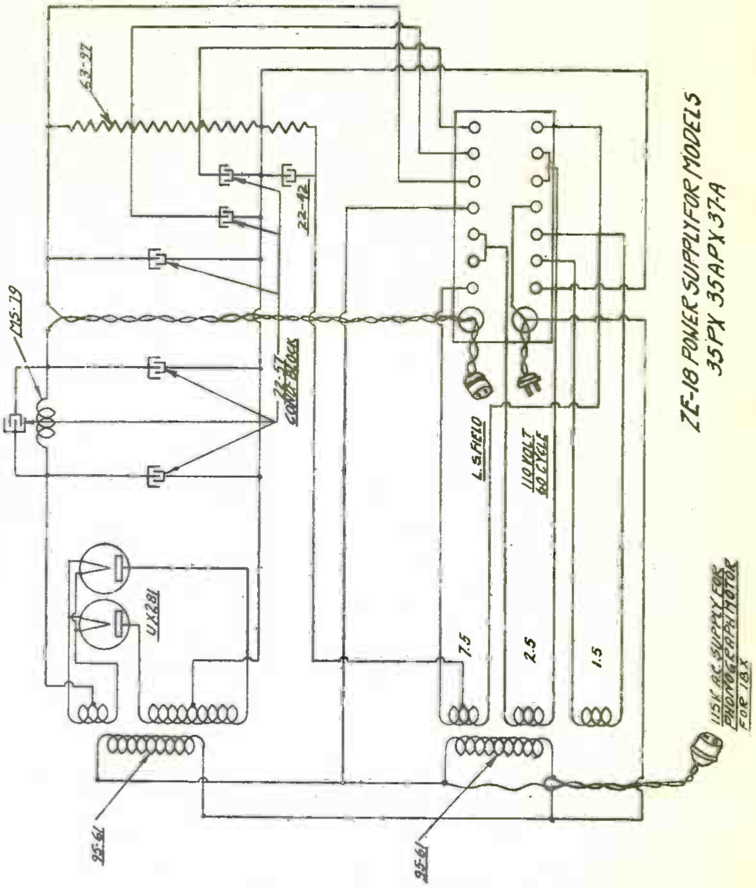

ZE-18 POWER SUPPLY FOR MODELS 35PX 35APX 37A

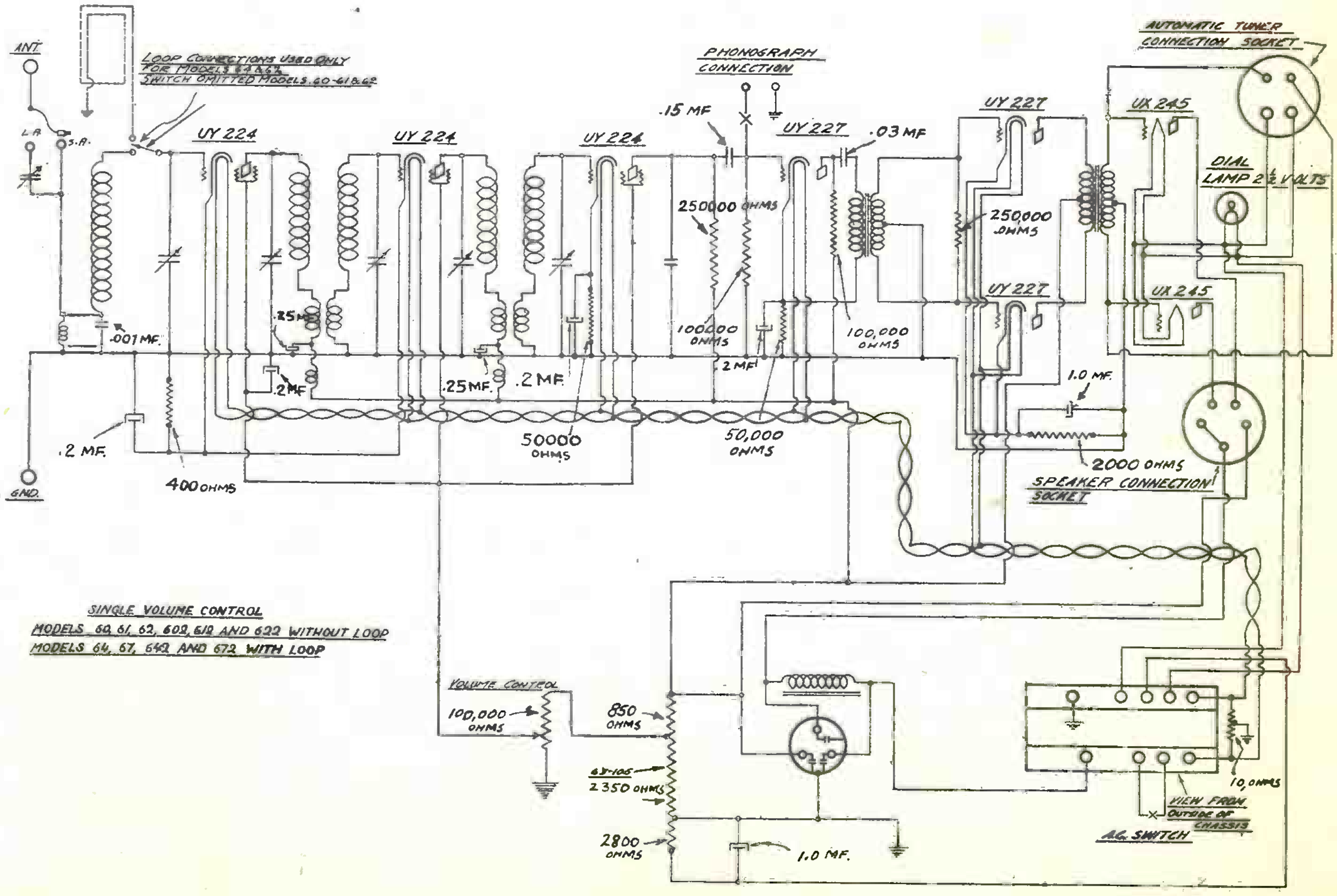

SINGLE VOLUME CONTROL
MODELS 60, 61, 62, 602, 612 AND 622 WITHOUT LOOP
MODELS 64, 67, 642 AND 672 WITH LOOP

ZENITH RADIO CORP.

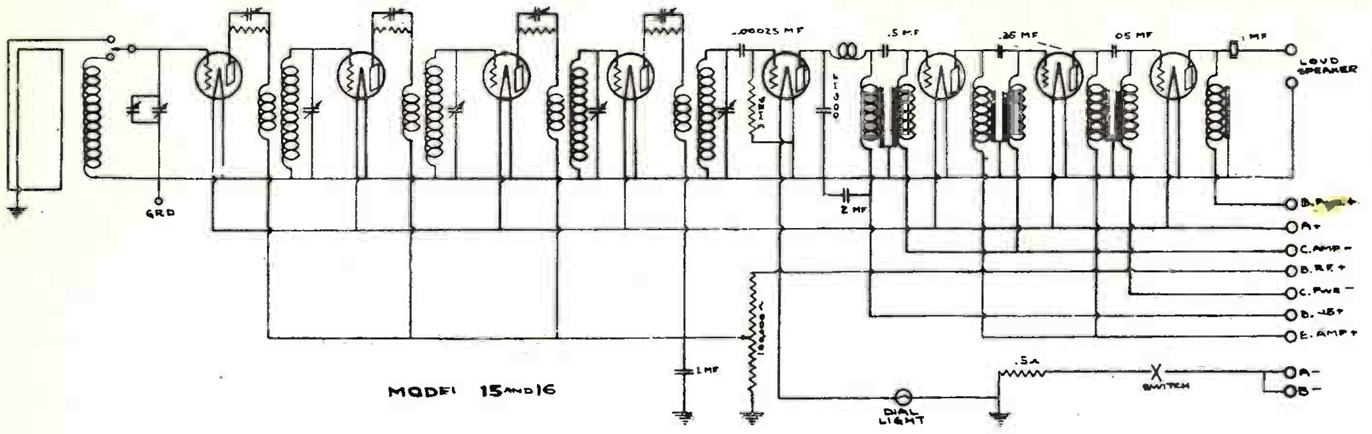

MODEL 15 AND 16

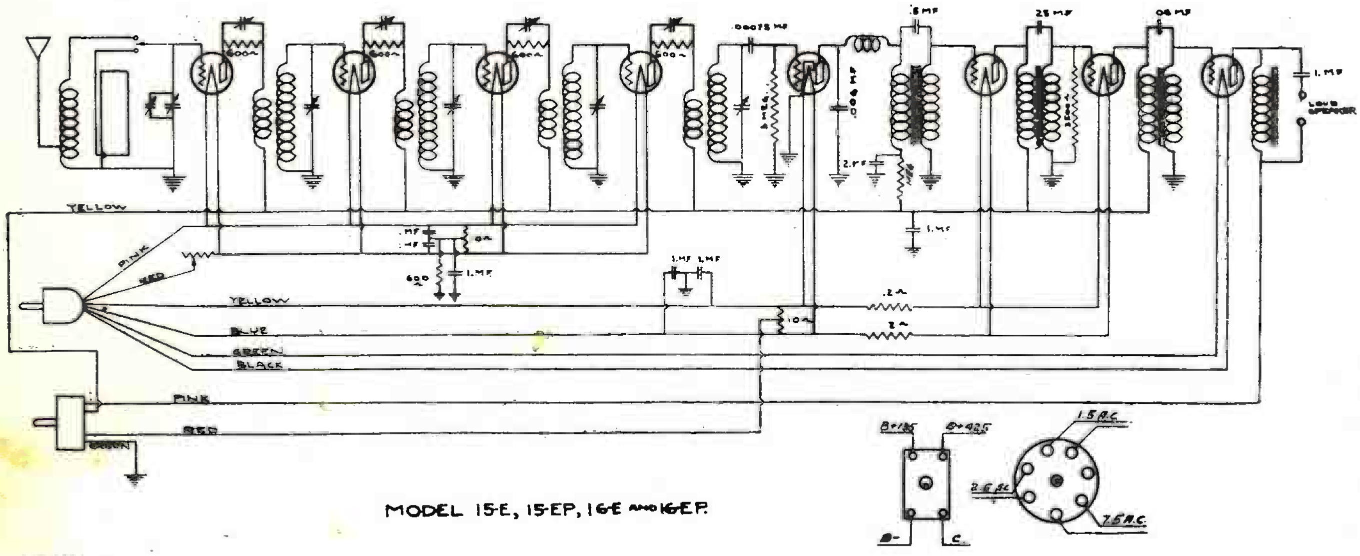

MODEL 15-E, 15-EP, 16-E AND 16-E.P.

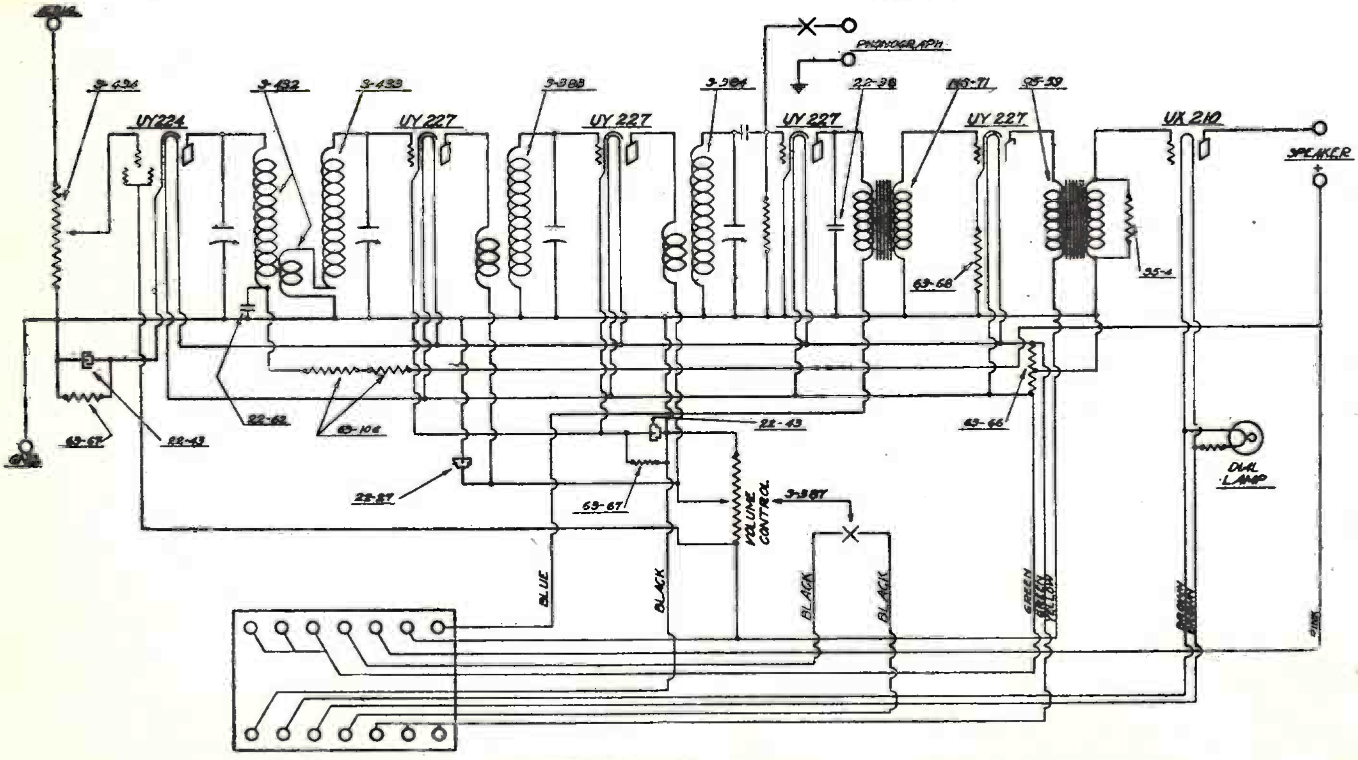

WIRING DIAGRAM
MODELS 42 AND 422
6 TUBE ELECTRIC SET

Rural Farm Set

ZENITH RADIO CORP.

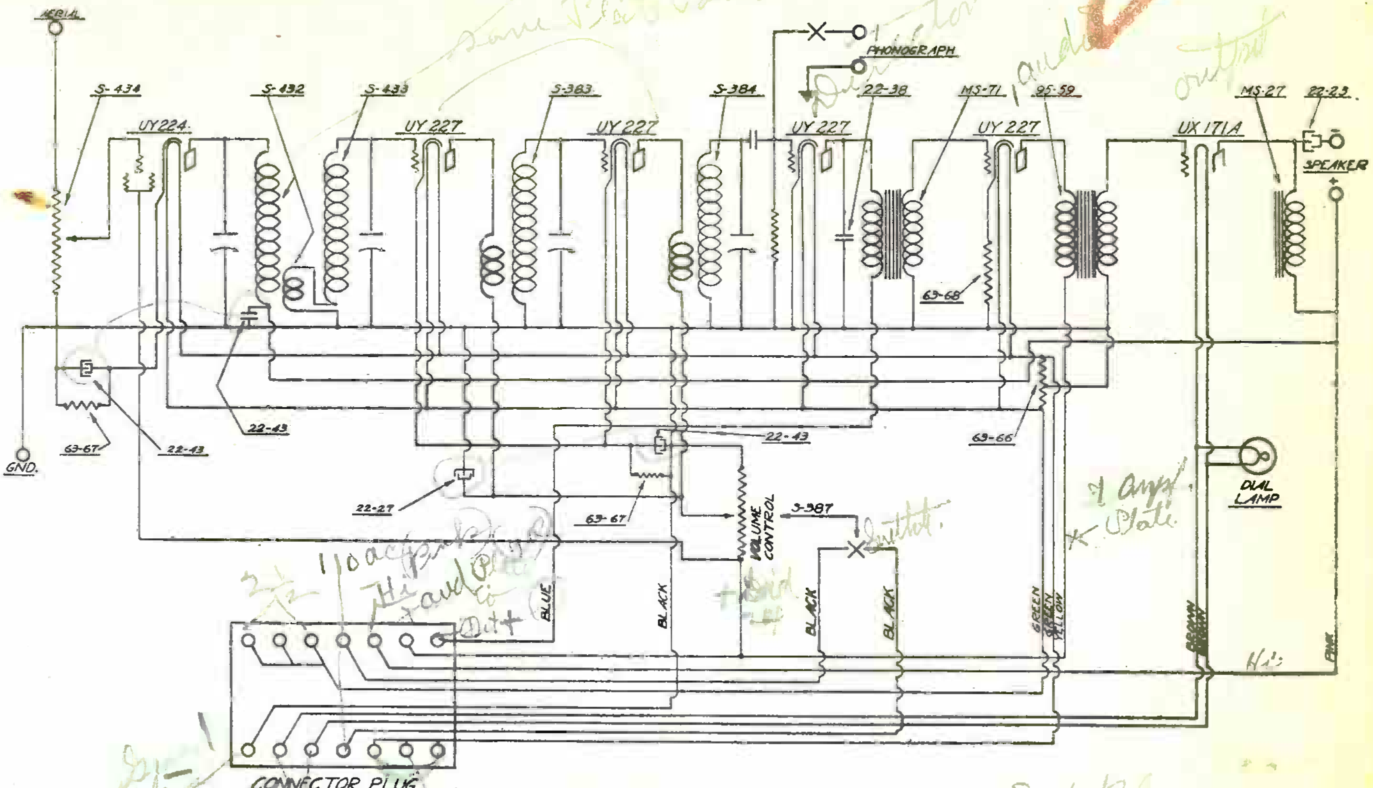

Same Plate Volts

Detector

audio

output

1 Amp. Plate

Switch

110 ac Pink Hi and Blue to Det+

2½

+ Grid

Hi

Black Ground

5v to 71A

2½

Det Blue
RF+1st amp Yellow
to 71A Pink Hi

WIRING DIAGRAM
MODELS 41 AND 412
6 TUBE ELECTRIC SET

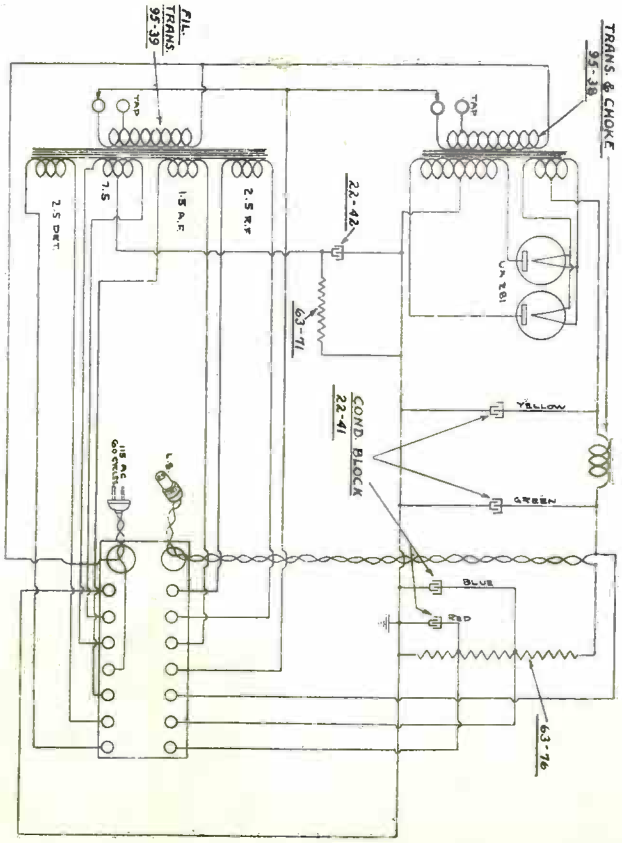

ZE 12 POWER SUPPLY FOR MODELS 39-39A-40A

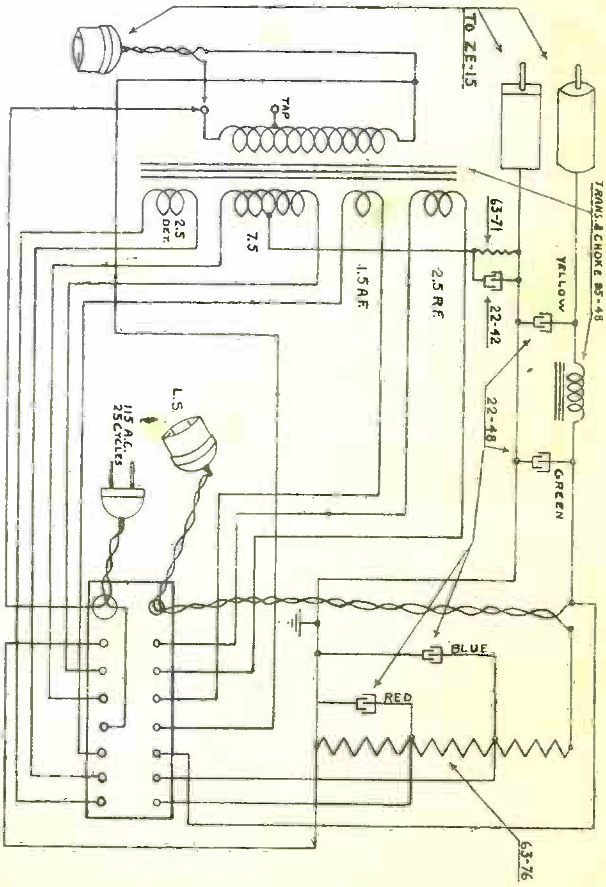

WIRING DIAGRAM-MODEL ZE-16-FILTER UNIT FOR MODELS 392-392A.

ZENITH RADIO CORP.

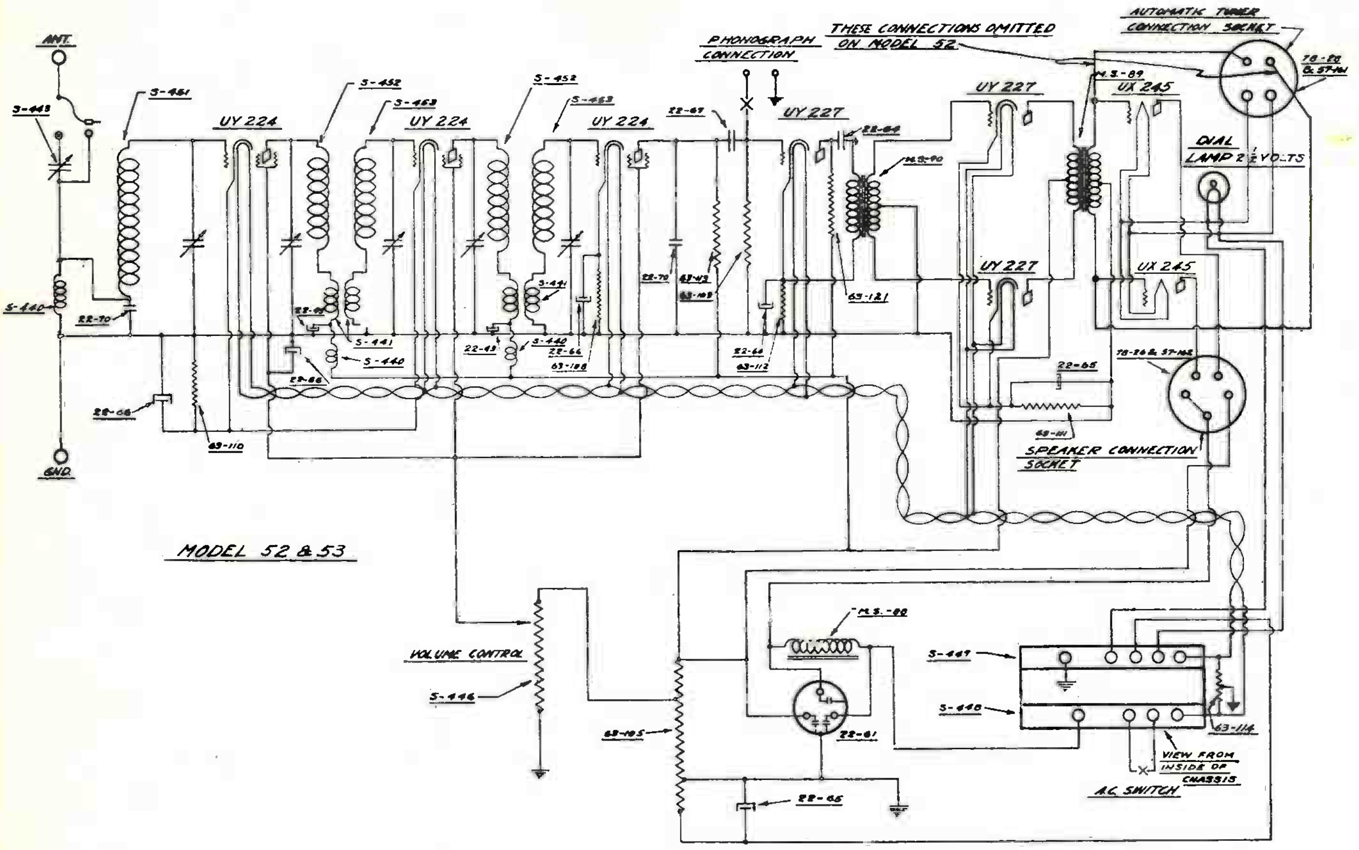

MODEL 52 & 53

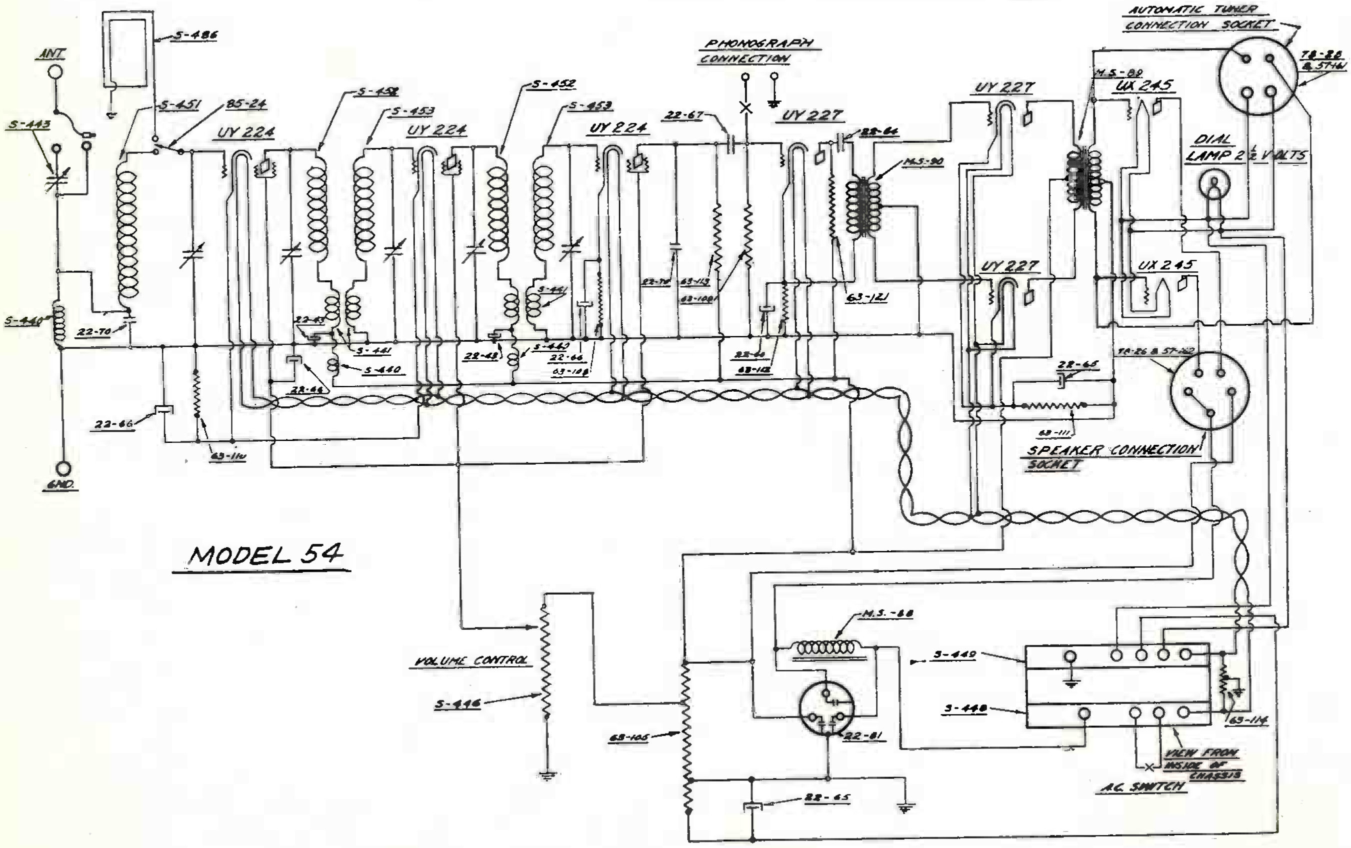

MODEL 54

ZENITH RADIO CORP.

MODEL-70

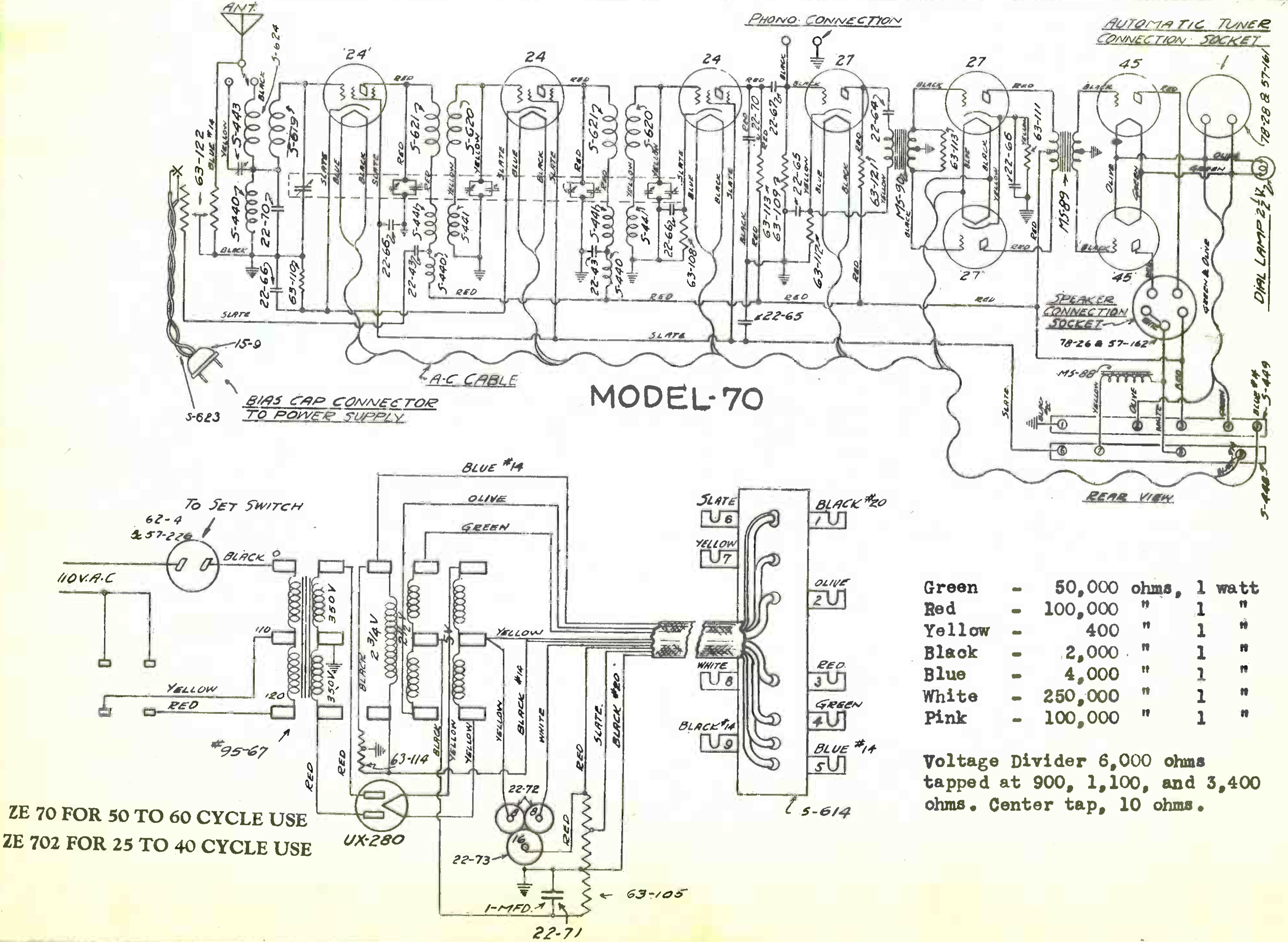

Green	-	50,000 ohms,	1 watt
Red	-	100,000 "	1 "
Yellow	-	400 "	1 "
Black	-	2,000 "	1 "
Blue	-	4,000 "	1 "
White	-	250,000 "	1 "
Pink	-	100,000 "	1 "

Voltage Divider 6,000 ohms tapped at 900, 1,100, and 3,400 ohms. Center tap, 10 ohms.

ZE 70 FOR 50 TO 60 CYCLE USE
ZE 702 FOR 25 TO 40 CYCLE USE

SPLITDORF ELEC., MFG., CO.

R-200

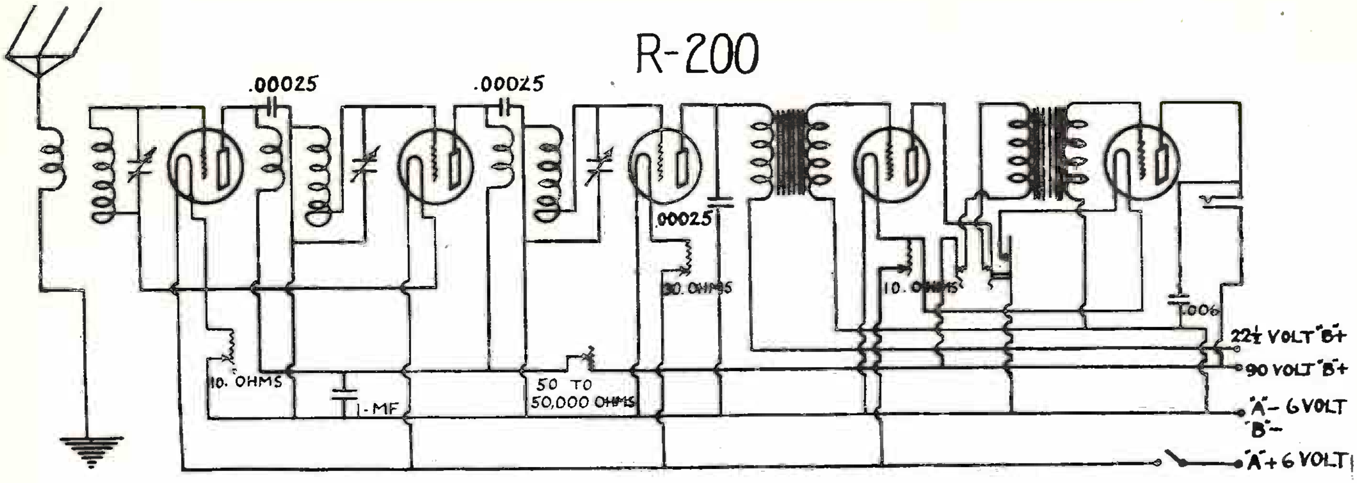

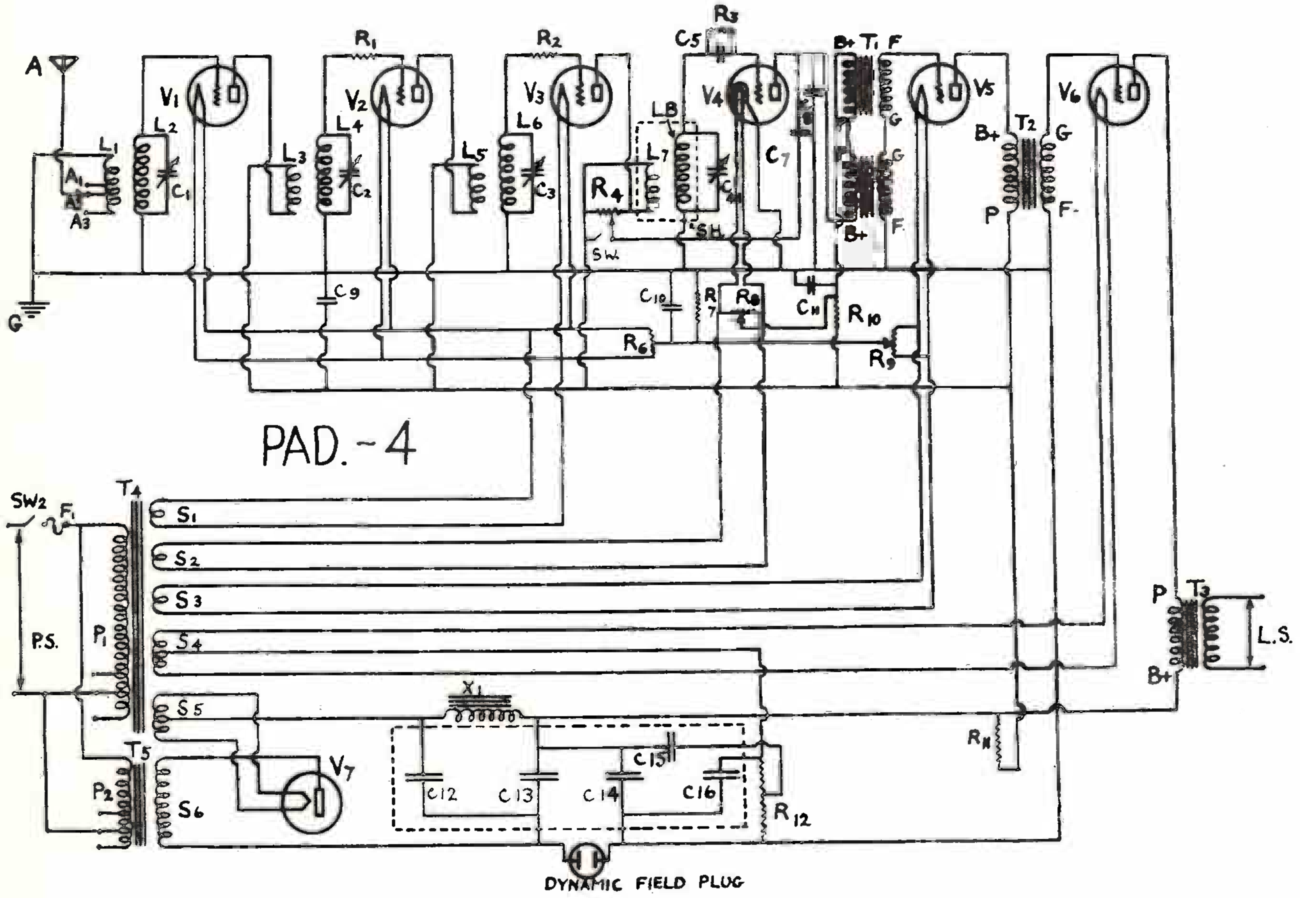

PAD.-4

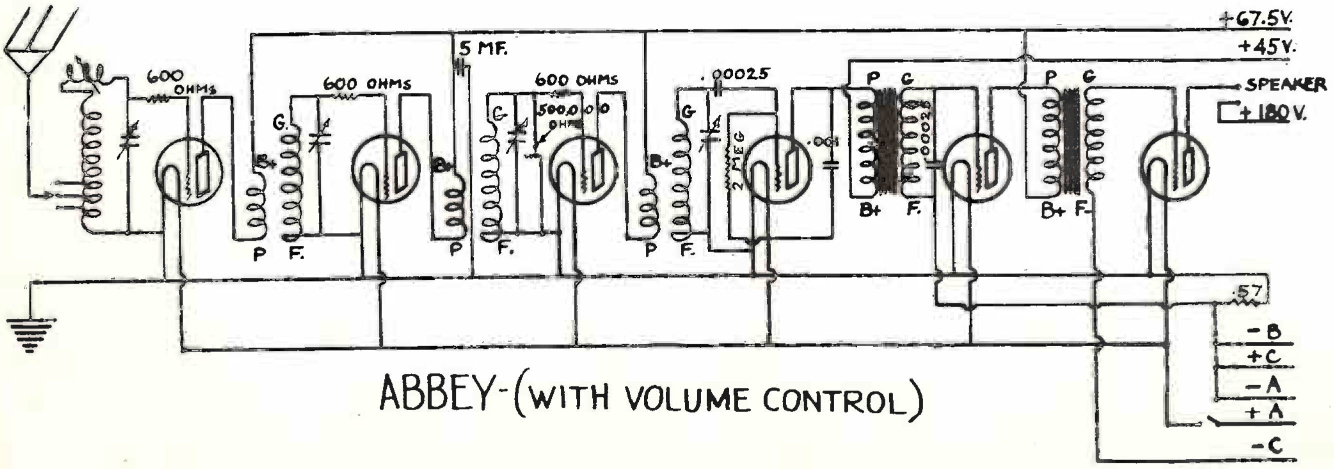

ABBEY-(WITH VOLUME CONTROL)

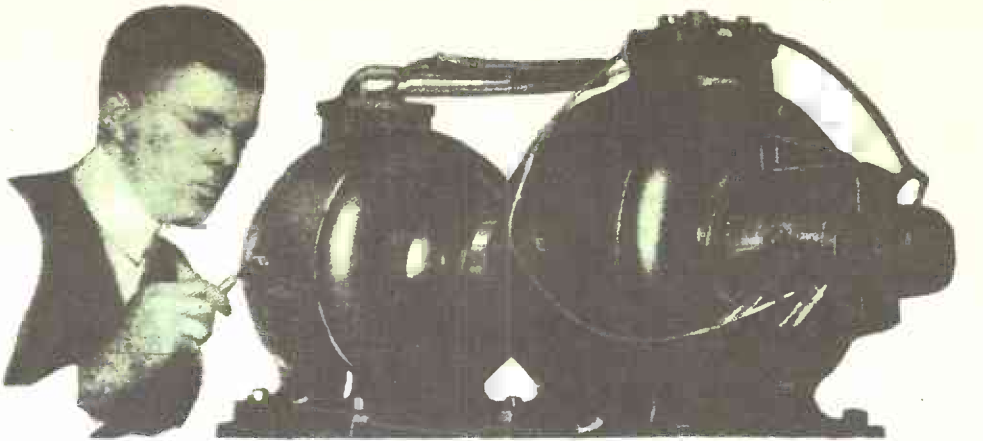

Amazingly Easy Way to get into ELECTRICITY

Don't spend your life waiting for $5 raises in a dull, hopeless job. Now . . . and forever . . . say good-bye to 25 and 35 dollars a week. Let me show you how to qualify for jobs leading to salaries of $50, $60 and up, a week, in Electricity —NOT by correspondence, but by an amazing way to teach, RIGHT HERE IN THE GREAT COYNE SHOPS. You become a practical expert in 90 days! Getting into Electricity is far easier than you imagine!

Learn Without Lessons in 90 DAYS

By Actual Work—in the Great Shops of Coyne

Lack of experience—age, or advanced education bars no one. I don't care if you don't know an armature from an air brake—I don't expect you to! I don't care if you're 16 years old or 48—it makes no difference! Don't let lack of money stop you. Most of the men at Coyne have no more money than you have.

Railroad Fare Allowed

I will allow your railroad fare to Chicago, and if you should need part-time work I'll assist you to it. Then, in 12 brief weeks, in the great roaring shops of Coyne, I train you as you never dreamed you could be trained on a gigantic outlay of electrical apparatus . . . costing hundreds of thousands of dollars . . . real dynamos, engines, power plants, autos, switchboards, transmitting stations . . . everything from door-bells to farm power and lighting . . . full-sized . . . in full operation every day!

No Books-No Printed Lessons

No books, no baffling charts . . . all real actual work . . . right here in the great Coyne school . . . building real batteries . . . winding real armatures, operating real motors, dynamos and generators, wiring houses, etc., etc. That's a glimpse of how we make you a master practical electrician in 90 days, teaching you far more than the average ordinary electrician ever knows and fitting you to step into jobs leading to big pay immediately after graduation. Here, in this world-famous *Parent school*—and nowhere else in the world—can you get this training!

Jobs-Pay-Future

Dont' worry about a job, Coyne training settles the job question for life. Demand for Coyne men often exceeds the supply. Our employment bureau gives you a lifetime service. Two weeks after graduation, Clyde F. Hart got a position as electrician for the Great Western Railroad at over $100 a week. That's not unusual. We can point to Coyne men making up to $600 a month. $60 a week is only the beginning of your opportunity. You can go into radio, battery, or automotive electrical business for yourself and make up to $15,000 a year.

GET THE FACTS

Coyne is your one great chance to get into electricity. Every obstacle is removed. This school is 30 years old—Coyne training is tested—proven beyond all doubt—endorsed by many large electrical concerns. You can find out everything absolutely free. Simply mail the coupon and let me send you the big, free Coyne book of 150 photographs . . . facts . . . jobs . . . salaries . . . opportunities. Tells you how many earn expenses while training and how we assist our graduates in the field. This does not obligate you. So act at once. Just mail coupon.

Prepare for Jobs Like These

Here are a few of hundreds of positions open to Coyne-trained men. Our free employment bureau gives you lifetime employment service.

Armature Expert,	to $100 a Wk.
Substation Operator	$60 a Week and up
Auto Electrician	$110 a Week
Inventor	Unlimited
Maintenance Engineer	up to $150 a Week
Service Station Owner	up to $200 a Week
Radio Expert	up to $100 a Week

Now in Our New Home

This is our new, fire-proof, modern home wherein is installed thousands of dollars' worth of the newest and most modern Electrical Equipment of all kinds. Every comfort and convenience has been arranged to make you happy and contented during your training.

Get This FREE Book

Mr. H. C. LEWIS, President
COYNE ELECTRICAL SCHOOL, Dept. BO-69
500 S. Paulina St., Chicago, Ill.

Dear Mr. Lewis:
Without obligation send me your big free catalog and all details of Railroad Fare to Chicago, Free Employment Service, Radio, Aviation Electricity, and Automotive Courses, and how I can "earn while learning."

Name ....
Address ....
City.. *State*..................

COYNE ELECTRICAL SCHOOL

H. C. LEWIS, Pres. ***Established 1899***

500 S. Paulina Street - Dept. BO-69 - Chicago, Illinois

SPLITDORF ELEC., MFG., CO.

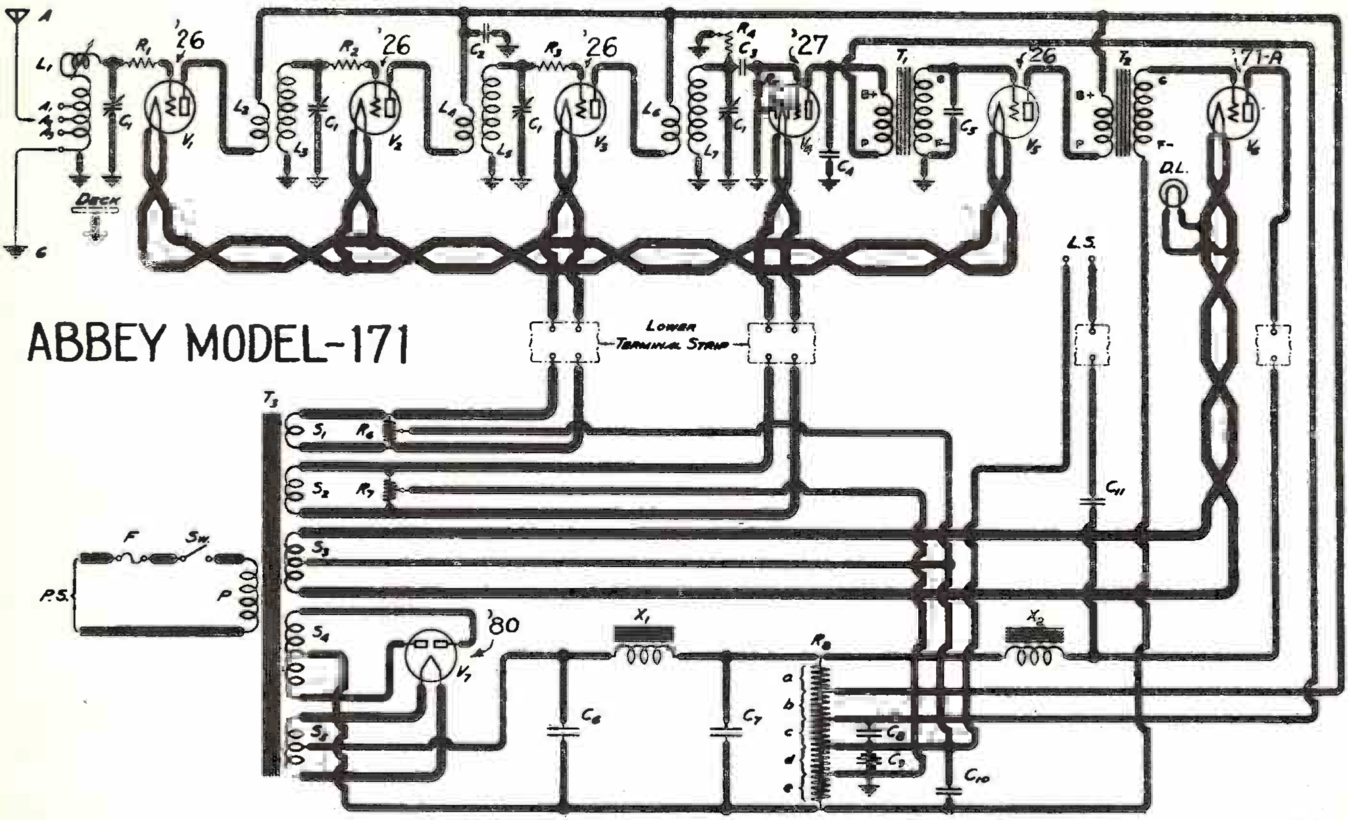

ABBEY MODEL-171

NATHANIEL BALDWIN CO.

SCHEMATIC DIAGRAM OF BALDWIN SCREEN GRID RECEIVING SET

MODEL 80

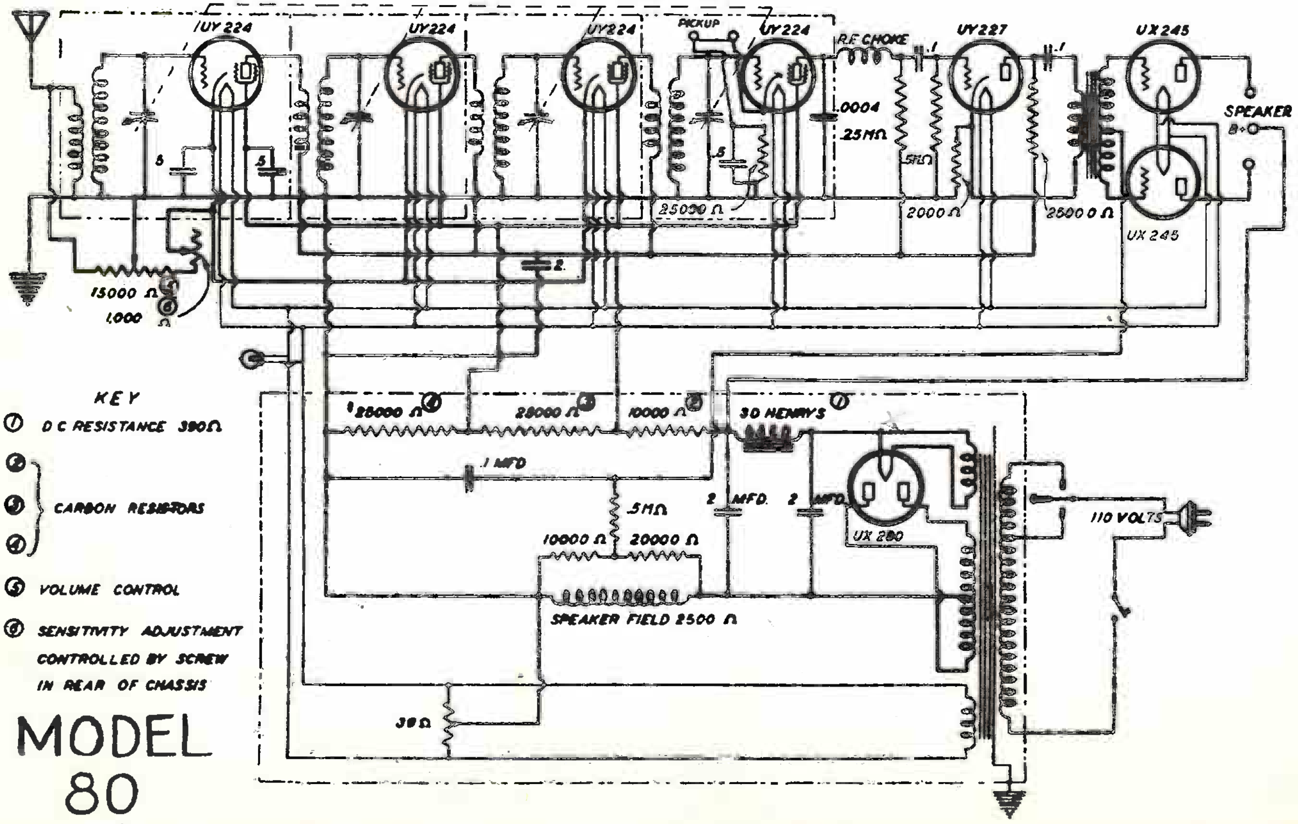

KEY

① D C RESISTANCE 390Ω

②
③ CARBON RESISTORS
④

⑤ VOLUME CONTROL

⑥ SENSITIVITY ADJUSTMENT CONTROLLED BY SCREW IN REAR OF CHASSIS

MODEL
80

ADJUSTABLE SLIDING CLIP

—A handy Feature found only on TRUVOLT

U. S. Pat.
1676869
& Pats.
Pending.

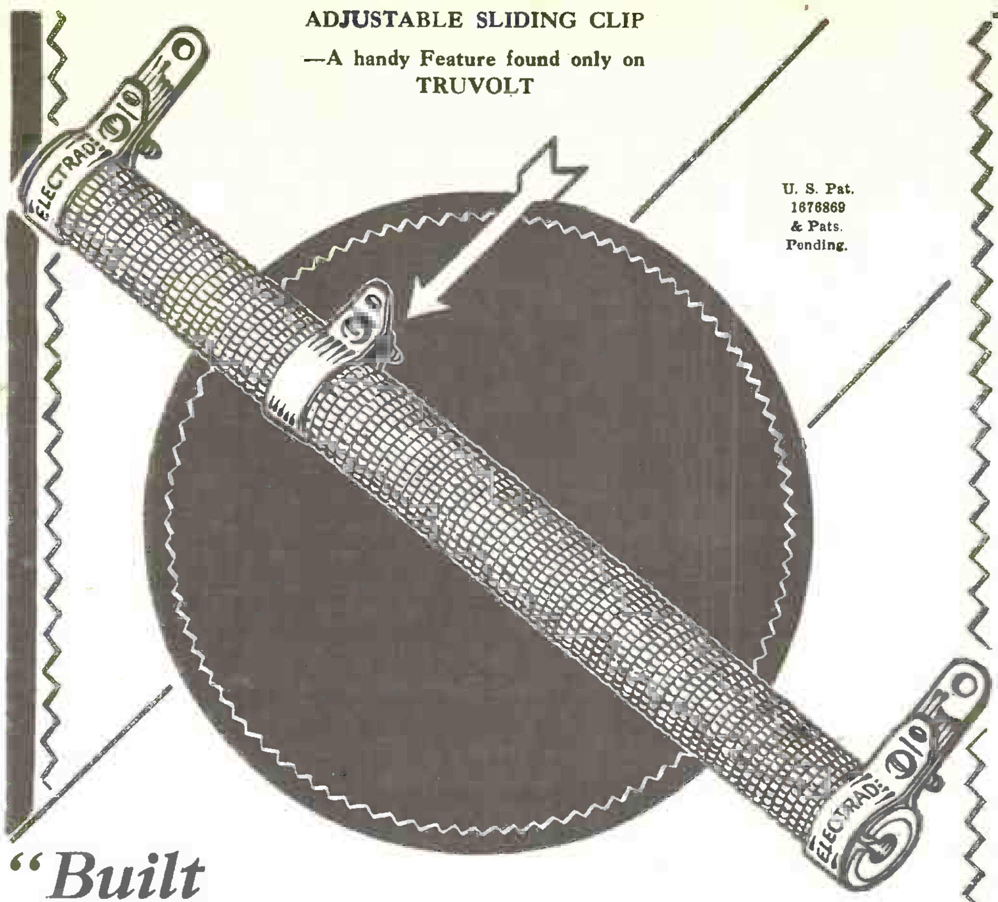

"Built with ELECTRAD Resistors" *means* Built to PERFORM!

SINCE the birth of the radio industry, the ELECTRAD organization has built radio resistors of superior engineering refinement, quality manufacture and perfect adaptability to existing radio requirements.

The success of this policy is shown by the universal use and endorsement of ELECTRAD Resistors by radio experts all over the world........

ELECTRAD Resistors in the radio you build, buy or sell will pay you the dividends that come from perfect operation and long efficient service.

ELECTRAD engineers are *specialists* in resistors and voltage controls. Your problems are their problems and you are invited to ask for their advice and cooperation whenever you desire it.

The radio service man is doing an important work in insuring radio owners satisfaction and the ELECTRAD organization welcomes the opportunity to be service men to service men.

The ELECTRAD line of stock resistors and voltage controls covers practically every radio need. It will pay you to familiarize yourself with all Electrad products.

Mail the Convenient Coupon for general literature, or write us a letter about special problems.

175 Varick St., New York, N.Y.
ELECTRAD
INC.

ELECTRAD TRUVOLT Resistors

(Illustrated)

TRUVOLT Resistors are accepted the world over as the standard of accuracy, dependability and long life.

They are built on a distinctive, patented principle that insures maximum air-cooling and convenience of adjustment.

The resistance wire is wound first around an asbestos core, having a flexible, enamelled copper center.

This winding is then in turn wound around a grooved fireclay base and firmly anchored at each terminal.

TRUVOLTS are made in all usual sizes and values and are ideal for eliminator and powerpack use.

TRUVOLT ADJUSTABLE has the same basic construction as the fixed types, but the resistance can be conveniently varied by knob control. There is a protective ventilating shield around the unit and provision is made for baseboard or panel mounting. The resistance element has unusually long life and gives smoother variation, as the contact travels *endwise* over the wire. 22 stock sizes, $2.50.

SLIDING CLIP

A Great Convenience in Repair Work

The fixed type TRUVOLTS are really *semi-variable*, on account of one or more sliding adjustable clips in between the main terminals (*see illustration*). This is an *exclusive* feature of great value in experimental work, or in making repairs where exact resistance values are desired.

No other type resistance affords this convenience.

Mail Coupon for Data

ELECTRAD, INC., Dept. OFM, 175 Varick Street, New York, N. Y.
Please send full information on products checked:
☐ TRUVOLT RESISTORS; ☐ VOLUME CONTROLS; ☐ ALL PRODUCTS

Name..

Address..

....

ARGUS RADIO CORP.

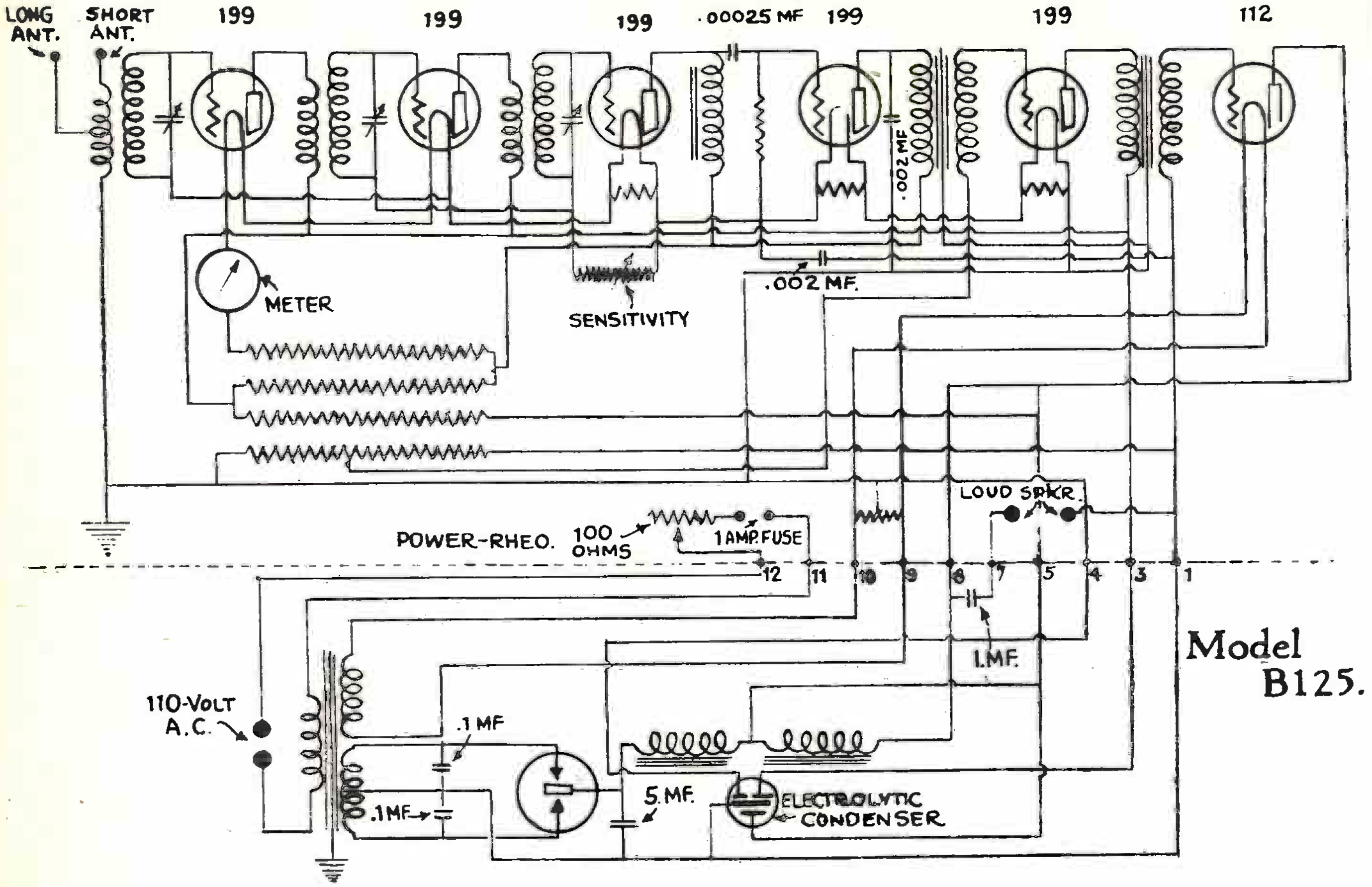

DIAGRAM OF TYPE B-195 ARGUS ELECTRIC RADIO RECEIVER

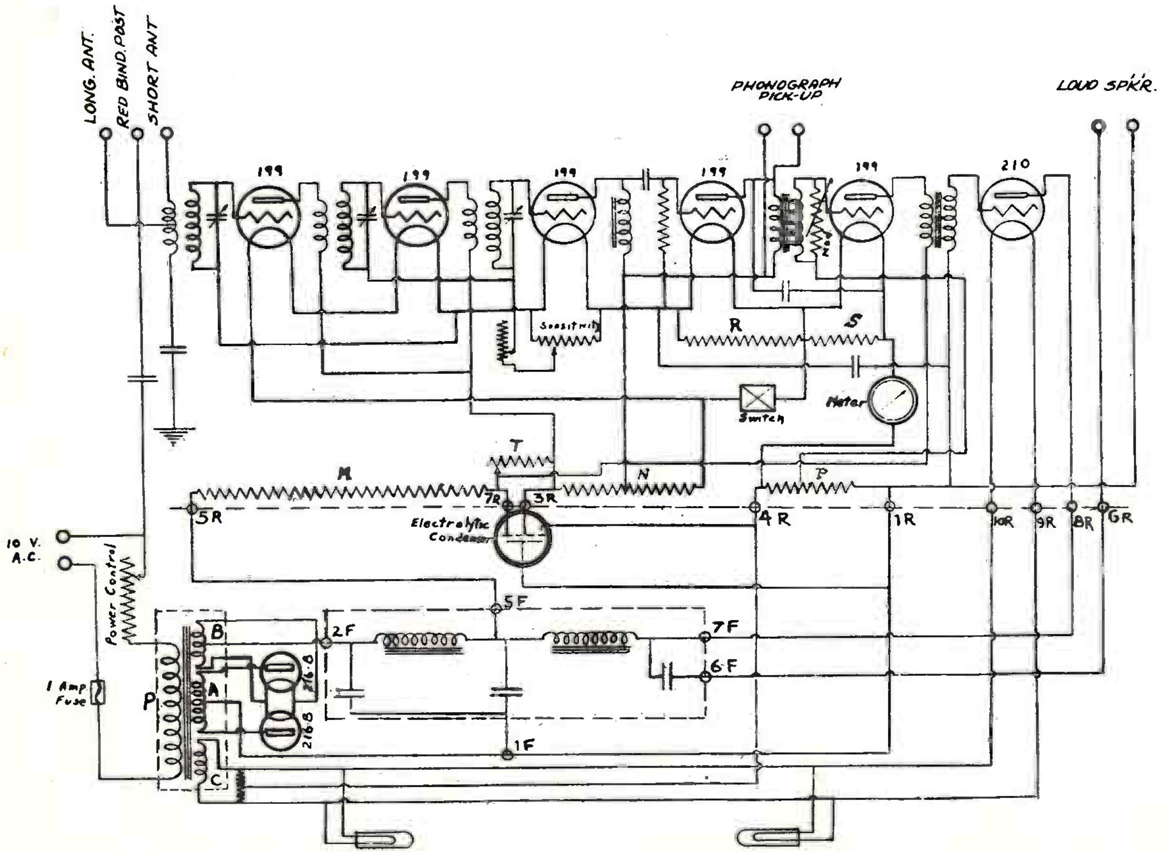

The numerals followed by letter "R" indicate soldered points in numerical order on the row on left hand of the radio sub-panel (when facing the receiver) and counting from front towards rear.

The numerals followed by letter "F" indicate the leads from the filter box counting from front towards rear (count also the "blank" holes.)

KEEP STEP WITH RADIO PROGRESS!

RADIO is one of the real marvels of this modern age. Its development has been phenomenal. It is growing, changing, evolving new principles which require constant study. The demand is for technically trained men—men who keep pace with the unfolding revelations of this mighty and promising industry.

The International Correspondence Schools Course in Radio, prepared and constantly supplemented by outstanding authorities in the field, is specifically designed to meet the requirements of the radio industry for technically trained radio men. The manufacturer, the distributor, the dealer, Communication and Steamship Companies, the U. S. Government, all insist upon up-to-date, expert training. Recognized for its completeness and practicability, an I.C.S. Radio Course provides this training.

Authorities responsible for the preparation of the I.C.S. Radio Course include: H. H. Beverage, Radio Corporation of America; George C. Crom, American Transformer Company; Keith Henney, author of "Principles of Radio;" Malcom E. Gager, instructor at the Massachusetts Institute of Technology; E. V. Amy, consulting radio engineer, formerly with R.C.A.; H. F. Dart, authority on radio tubes; Julius C. Aceves, consulting radio engineer, formerly of Columbia University, and others.

The I.C.S. Radio Course is complete, from the foundational principles of radio to the most advanced stages, thoroughly and scientifically covering every department of this vast industry. It is a modern education in radio, a valuable guide of advancement for men engaged professionally in the radio business. It also outlines the principles and possibilities of television.

Mark and mail the coupon. We will send you all details. This act may be the real beginning of your career in radio!

INTERNATIONAL CORRESPONDENCE SCHOOLS, Box 2326
Scranton, Penna.

Without cost or obligation, please tell me all about the
NEW RADIO COURSE

*Name*______________________________

*Street Address*________________________

*City*________________*State*____________

If you reside in Canada, send this coupon to the International Correspondence Schools Canadian, Ltd., Montreal, Canada

ATWATER KENT MFG. CO.

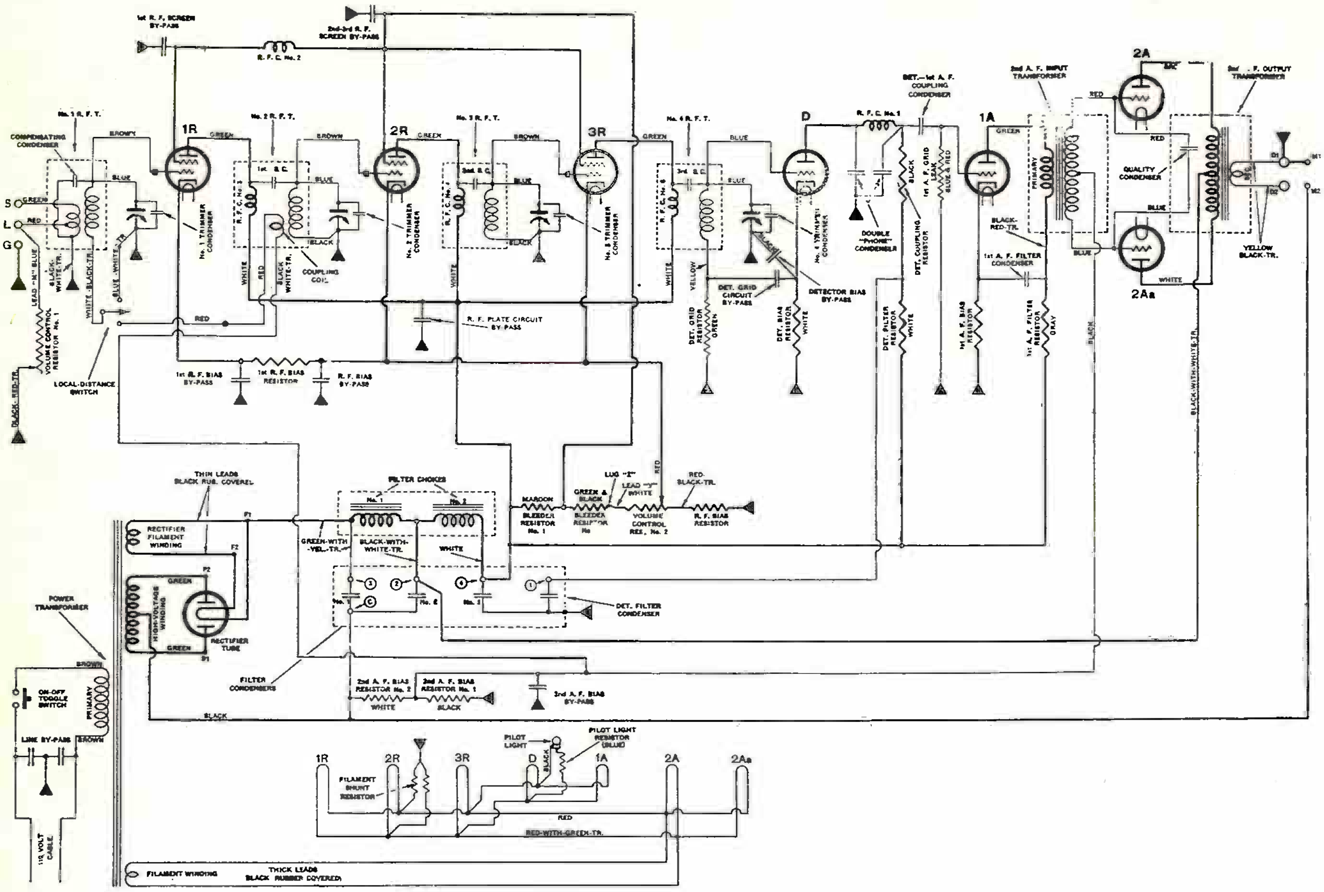

FIG. 202. SCHEMATIC DIAGRAM OF 3RD TYPE OF MODEL 60-C.
In the above diagram, "S.C." means stopping condenser.
* In later types of this model, the leads from the filament winding are covered with light gray rubber or black sleeving, and the grid-return of No. 4 R F.T. is yellow-with-black-tracer instead of yellow.
In a few of these models, the quality condenser is connected across the primary of the output transformer, the connections being made inside the unit:
In these sets, the output transformer has five leads instead of seven.

TRANS. CORP. OF AMERICA

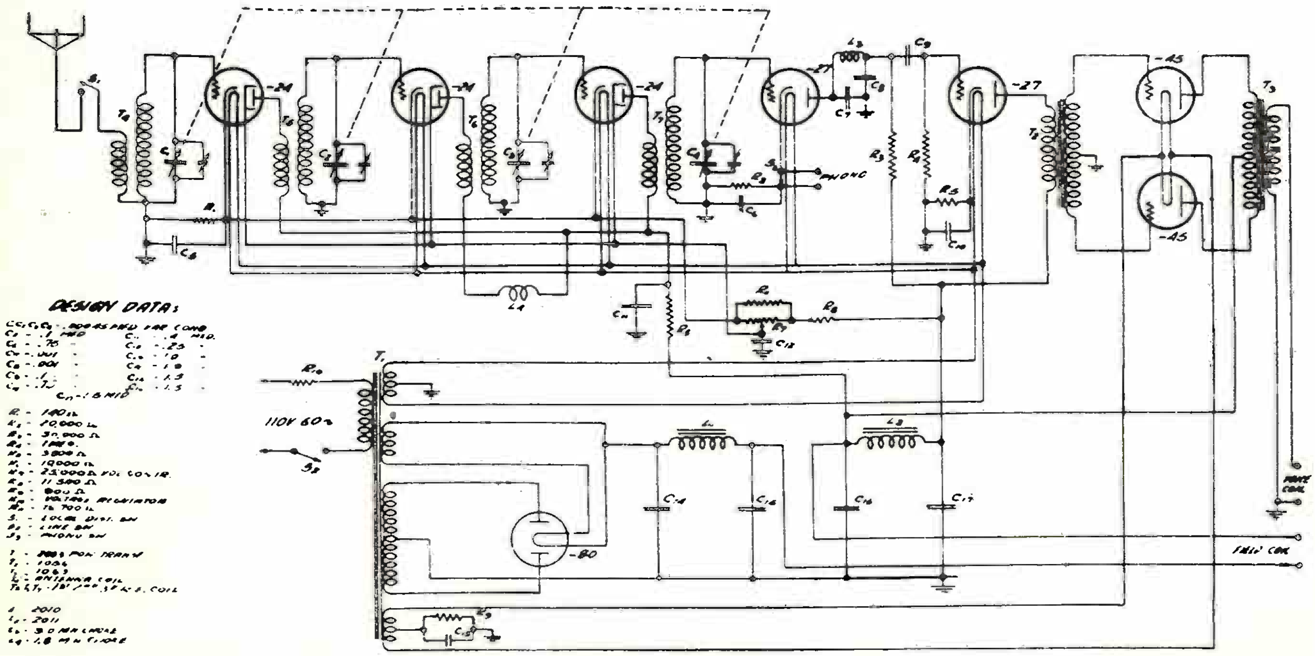

Schematic Diagram of Chassis and Power Pack

A.C.-51, A.C.-53, A.C.-55, 25,51 - 25,53 - 25,55.

5,000 Radio Service Men *Needed Now!*

The replacing of the old battery operated receivers with all-electric Radios has created a tremendous country-wide demand for expert Radio Service Men. Thousands of trained men are needed *quick!*

$40 to $100 a week Full Time
$3.00 an hour Spare

30 Days of R.T.A. Home Training

. . . enables you to cash in on this latest opportunity in Radio

Ever on the alert for new ways of helping our members make more money out of Radio, the Radio Training Association of America now offers ambitious men an intensified training course in Radio Service Work. By taking this training you can qualify for Radio Service Work in 30 days, earn $3.00 an hour and up, spare time; prepare yourself for full-time work paying $40 to $100 a week.

More Positions Open Than There Are Trained Men to Fill Them

If you were qualified for Radio Service Work today, we could place you. We can't begin to fill the requests that pour in from great Radio organizations and dealers. Members wanting full-time positions are being placed as soon as they qualify. 5,000 more men are needed *quick!* If you want to get into Radio, earn $3.00 an hour spare time or $40 to $100 a week full time, this R. T. A. training offers you the opportunity of a lifetime.

We furnish you with all the equipment you need to become a Radio Service Man!

Radio Service Work a Quick Route to the Big-Pay Radio Positions

Radio Service Work gives you the basic experience you need to qualify for the big $8,000, $10,000 to $25,000 a year Radio positions. Once you get this experience, the whole range of rich opportunities in Radio lies open before you. Training in the Association, starting as a Radio Service Man, is one of the quickest, most profitable ways of qualifying for rapid advancement.

If you want to get out of small-pay, monotonous work and cash in on Radio quick, investigate this R.T.A. training and the rich money-making opportunities it opens up. No special education or electrical experience necessary. The will to succeed is all you need.

Mail Coupon for No-Cost *Training Offer*

Cash in on Radio's latest opportunity! Enroll in the Association. For a limited time we will give to the ambitious man a No-Cost Membership which need not . . . should not. . . cost you a cent. But you must act quickly. Filling out coupon can enable you to cash in on Radio within 30 days, lift you out of the small-pay, no-opportunity rut, into a field where phenomenal earnings await the ambitious. You owe it to yourself to investigate. Fill out coupon NOW for details of No-Cost Membership.

The Radio Training Association of America
4513 Ravenswood Ave. Dept. ORS-7, Chicago, Ill.

THE RADIO TRAINING ASSOCIATION OF AMERICA
4513 Ravenswood Ave., Dept. ORS-7 Chicago, Ill.

Gentlemen: Please send me details of your No-Cost training offer by which I can qualify for Radio Service Work within 30 days. This does not obligate me in any way.

Name..........

Address..........

City.......... *State*..........

COLONIAL RADIO CORP.

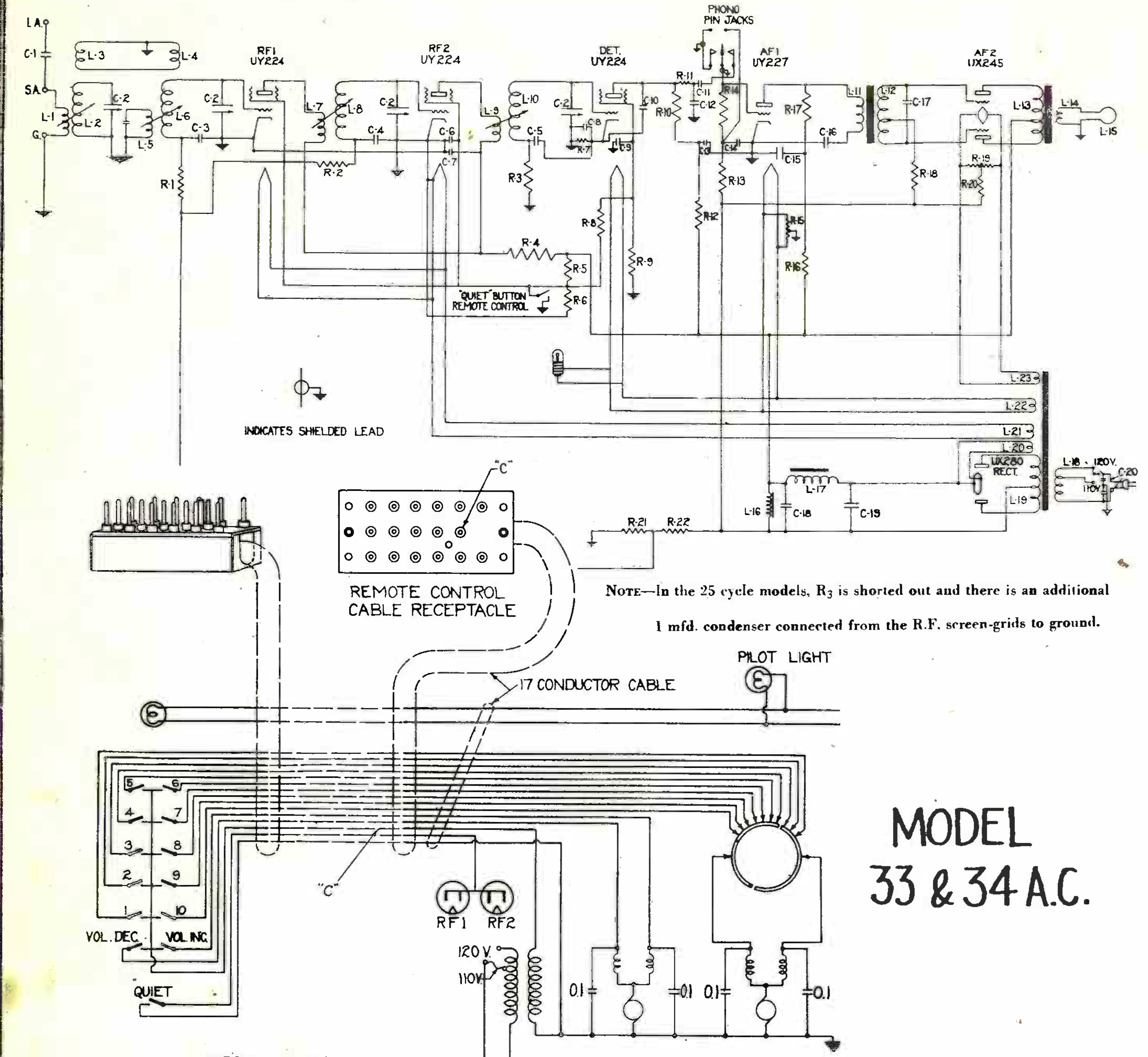

Note—In the 25 cycle models, R_3 is shorted out and there is an additional 1 mfd. condenser connected from the R.F. screen-grids to ground.

MODEL 33 & 34 A.C.

CIRCUIT DIAGRAM
REMOTE-CONTROL AUTOMATIC-TUNING APPARATUS

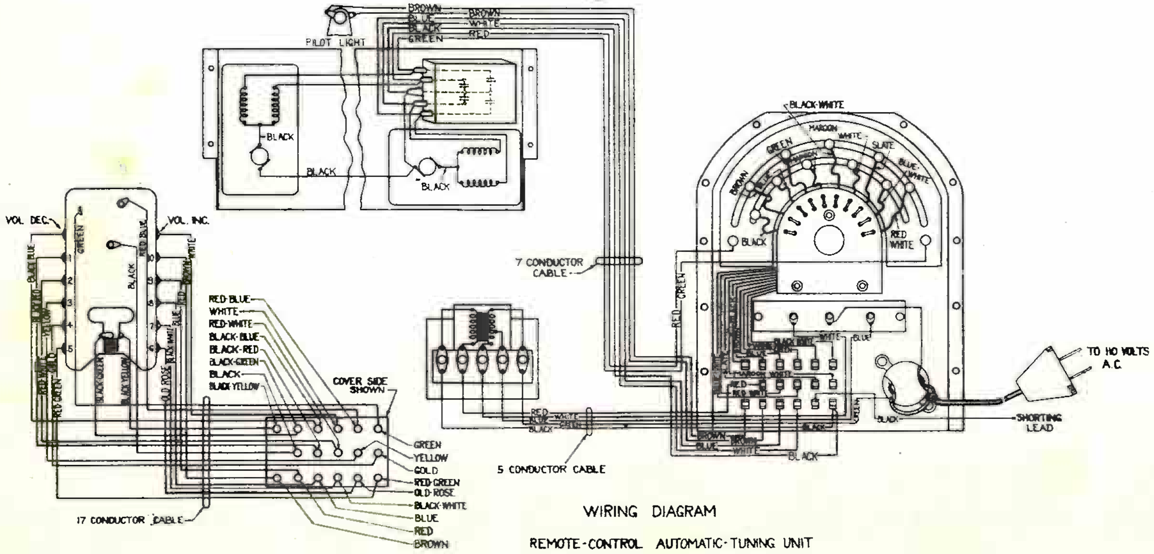

WIRING DIAGRAM
REMOTE-CONTROL AUTOMATIC-TUNING UNIT

I will train you at home to fill a BIG PAY Radio Job!

Here's Proof

$100 a week

"My earnings in Radio are many times greater than I ever expected they would be when I enrolled. They seldom fall under $100 a week. If your course cost four or five times more I would still consider it a good investment."

E. E. WINBORNE
1414 W. 48th St.,
Norfolk, Va.

Jumped from $35 to $100 a week

"Before I entered Radio I was making $35 a week. Last week I earned $110 servicing and selling Radios. I owe my success to N. R. I. You started me off on the right foot."

J. A. VAUGHN
8715 S. Kingshighway,
St. Louis, Mo.

$500 extra in 6 months

"In looking over my records I find I made $500 from January to May in my spare time. My best week brought me $107. I have only one regret regarding your course—I should have taken it long ago."

HOYT MOORE
R. R. 3, Box 919,
Indianapolis, Ind.,

If you are earning a penny less than $50 a week, send for my book of information on the opportunities in Radio. It is free. Clip the coupon NOW. Why be satisfied with $25, $30 or $40 a week for longer than the short time it takes to get ready for Radio.

Radio's growth opening hundreds of $50, $75, $100 a week jobs every year

In about ten years Radio has grown from a $2,000,000 to a $1,000,000,000 industry. Over 300,000 jobs have been created. Hundreds more are being opened every year by its continued growth. Men and young men with the right training—the kind of training I give you—are needed continually.

You have many jobs to choose from

Broadcasting stations use engineers, operators, station managers and pay $1,800 to $5,000 a year. Manufacturers continually need testers, inspectors, foremen, engineers, service men, buyers, for jobs paying up to $15,000 a year. Shipping companies use hundreds of Radio operators, give them world wide travel at practically no expense and a salary of $85 to $200 a month. Dealers and jobbers employ service men, salesmen, buyers, managers, and pay $30 to $100 a week. There are many other opportunities too. My book tells you about them.

So many opportunities many N. R. I. men make $5 to $25 a week while learning

The day you enroll with me I'll show you how to do 10 jobs, common in most every neighborhood, for spare time money. Throughout your course I send you information on servicing popular makes of sets; I give you the plans and ideas that are making $200 to $1,000 for hundreds of N. R. I. students in their spare time while studying.

Talking Movies, Television, Wired Radio included

Radio principles as used in Talking Movies, Television and home Television experiments, Wired Radio, Radio's use in Aviation, are all given. I am so sure that I can train you satisfactorily that I will agree in writing to refund every penny of your tuition if you are not satisfied with my Lessons and Instruction Service upon completing.

64-page book of information FREE

Get your copy today. It tells you where Radio's good jobs are, what they pay, tells you about my course, what others who have taken it are doing and making. Find out what Radio offers you, without the slightest obligation. ACT NOW.

J. E. SMITH, President
National Radio Institute Dept., OG-92
Washington, D. C.

Our Own Home

Pioneer and World's Largest Home-Study Radio training organization devoted entirely to training men and young men for good jobs in the Radio industry. Our growth has paralleled Radio's growth. We occupy three hundred times as much floor space now as we did when organized in 1914.

Lifetime Employment Service to all Graduates

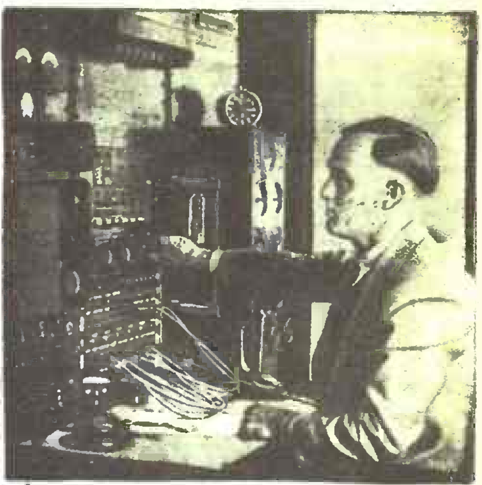

I will give You my new 8 OUTFITS of RADIO PARTS for a home Experimental Laboratory

You can build over 100 circuits with these outfits. You build and experiment with the circuits used in Crosley, Atwater - Kent, Eveready, Majestic, Zenith, and other popular sets. You learn how these sets work, why they work, how to make them work. This makes learning at home easy, fascinating, practical.

Back view of 5 tube Screen Grid A. C. tuned Radio frequency set—only one of many circuits you can build with my outfits.

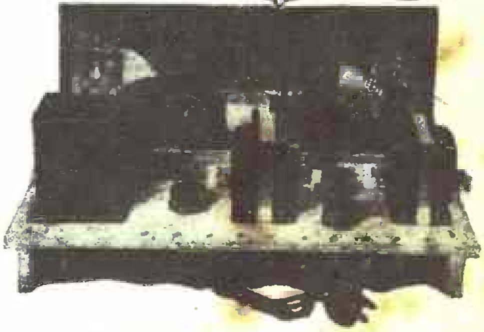

I am doubling and tripling the salaries of many in one year and less Find out about this quick way to BIGGER PAY

Radio Needs Trained Men

FILL OUT AND MAIL THIS COUPON TODAY

J. E. SMITH, President,
National Radio Institute, Dept. OG-92
Washington, D. C.

Dear Mr. Smith: Send me your book. This request does not obligate me.

Name ....

Address ....

City ....State ....

TRAV-LER MFG. CO.

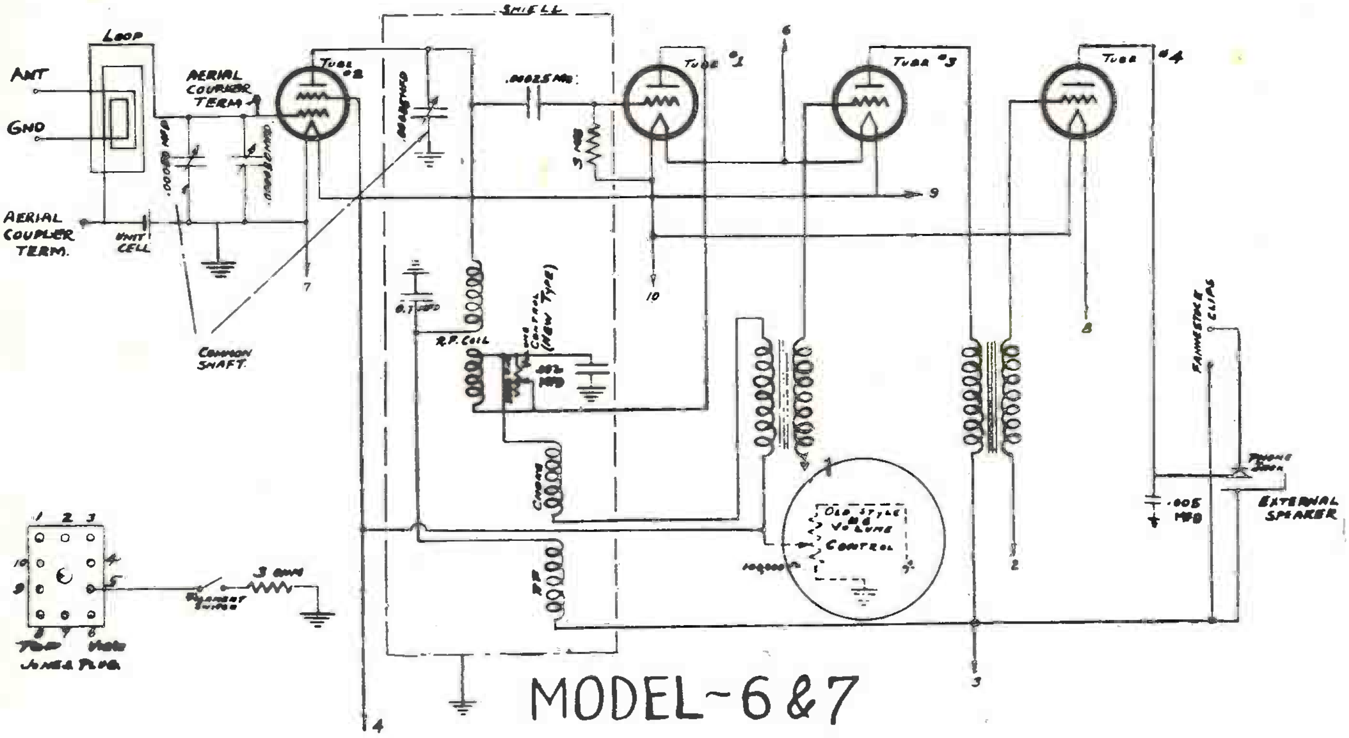

MODEL~6&7

A.C. POWER PACK

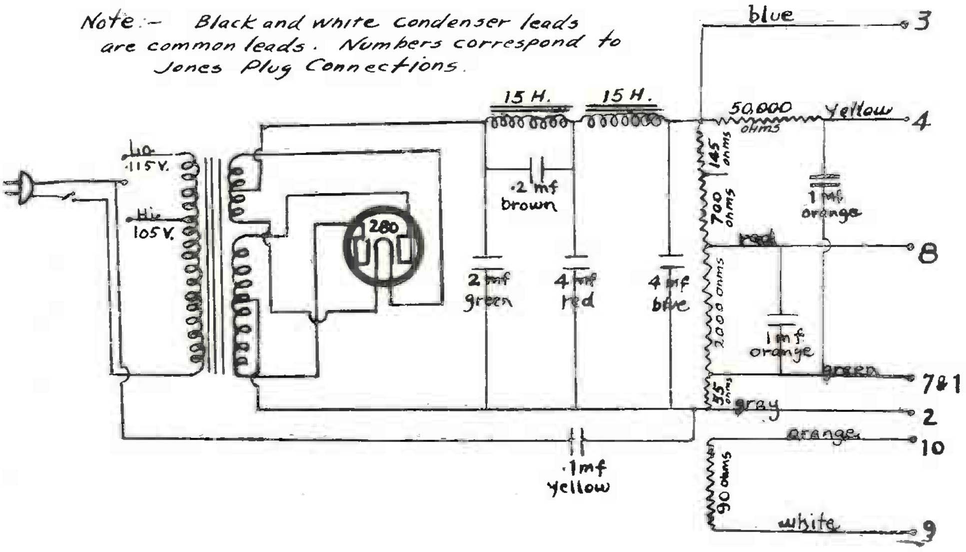

Note:— Black and white condenser leads are common leads. Numbers correspond to Jones Plug Connections.

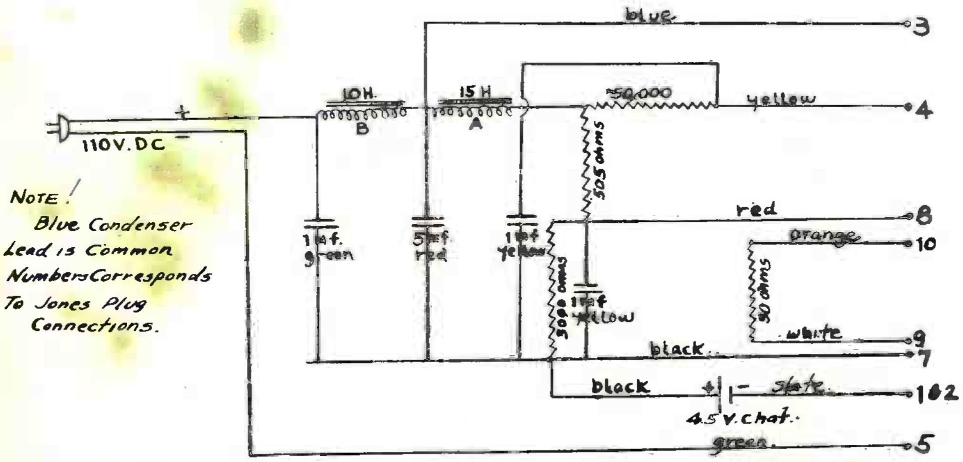

Note! Blue Condenser Lead is Common Numbers Corresponds To Jones Plug Connections.

D.C. POWER PACK

LET RCA INSTITUTES START YOU ON THE ROAD TO . . . . SUCCESS IN RADIO

Radio Mechanic and Inspector $1800 to $4,000 a Year.

Broadcast Station Mechanic $1800 to $3600 a Year.

Land Station Operator $1800 to $4000 a Year.

Broadcast Operators $1800 to $4800 a Year.

Radio needs you . . . That's why the entire Radio industry is calling for trained men . . . That's why thousands of men who answered these advertisements are now earning from $2,000 and up a year. Radio is highly interesting work . . . with opportunities that are yet unlimited. Manufacturers and broadcasting stations are now eagerly seeking trained RCA Institute men . . . Aviation and radio in the movies also provide innumerable opportunities . . . Millions of sets need servicing . . . thousands of ships require experienced operators . . . Never before was there an opportunity like this in Radio.

This is the Only Course Sponsored by Radio Corporation of America

RCA sets the standards for practically the entire Radio industry . . . The RCA Institutes' Home Laboratory Training Course enables you to learn more than the mere ABC's of Radio . . . In your spare time, in only an hour or so a day, you can obtain a thorough, practical education in Radio . . . You get the inside information, too, because you study right at the source of all the latest, up-to-the-minute developments. RCA, the world's largest Radio organization, sponsors every single detail in this course.

You learn Radio by actual experience with the remarkable outlay of apparatus given to every student. You learn the "How" as well as the "Why" of every Radio problem, such as repairing, installing and servicing fine sets. That's why every graduate of RCA Institutes has the experience, the ability and the confidence to hold a worthwhile Radio job.

Practical Instruction for You to Study in Your Own Home

RCA Institutes offers four different courses . . . certainly instruction that you need. A complete serviceman's and repairman's technical course . . . advanced course . . . complete course without code . . . and a complete course including code. And practical instruction with each course. Courses that teach construction, repairing, service, broadcasting and ship operating.

Graduates of RCA Institutes Find It Easier to Get Good Jobs

They are closest to the source of Radio's greatest achievements because so much of the progress of Radio is measured by the accomplishments of the great engineers in the huge research laboratories of the Radio Corporation of America.

Students of RCA Institutes get first-hand knowledge, get it quickly and get it complete. Success in radio depends upon training and that's the training you get with RCA Institutes. That's why every graduate who desired a position has been able to get one . . . That's why graduates are always in big demand.

Study Radio at the Oldest and Largest Commercial Training Organization in the World

Send for our Free Book . . . it will explain our practical methods of training that has prepared hundreds of men for success in Radio. Remember that you, too, can be successful . . . can speed up your earning capacity . . . can earn more money in Radio than you ever earned before. The man who trains today will hold down the worthwhile Radio job of the future. Come in and get our free book or send for it by mail. Everything you want to know about the opportunities in Radio. Forty fascinating pages, packed with pictures and descriptions of brilliant opportunities in this gigantic, world-wide profession.

See for yourself why graduates of RCA Institutes now occupy thousands of well-paid positions. These positions are usually available in from 3 to 10 days after graduation for men who can qualify. RCA Institutes will back you up to the limit. Our catalogue is yours free . . . SEND FOR IT TODAY!

Clip this Coupon *NOW!*

SPONSORED BY

RCA INSTITUTES, INC.

A Division of the
Radio Corporation of America

RCA

RCA INSTITUTES, Inc.
Dept. ORSM, 75 Varick St., N. Y.

Gentlemen: Please send me your FREE 40-page book which illustrates the brilliant opportunities in Radio and describes your laboratory-method of instruction at home!

Name...

Address..

State...

AMERICAN TRANSFORMER CO.

(P.F. 250 POWER AMPLIFIER)

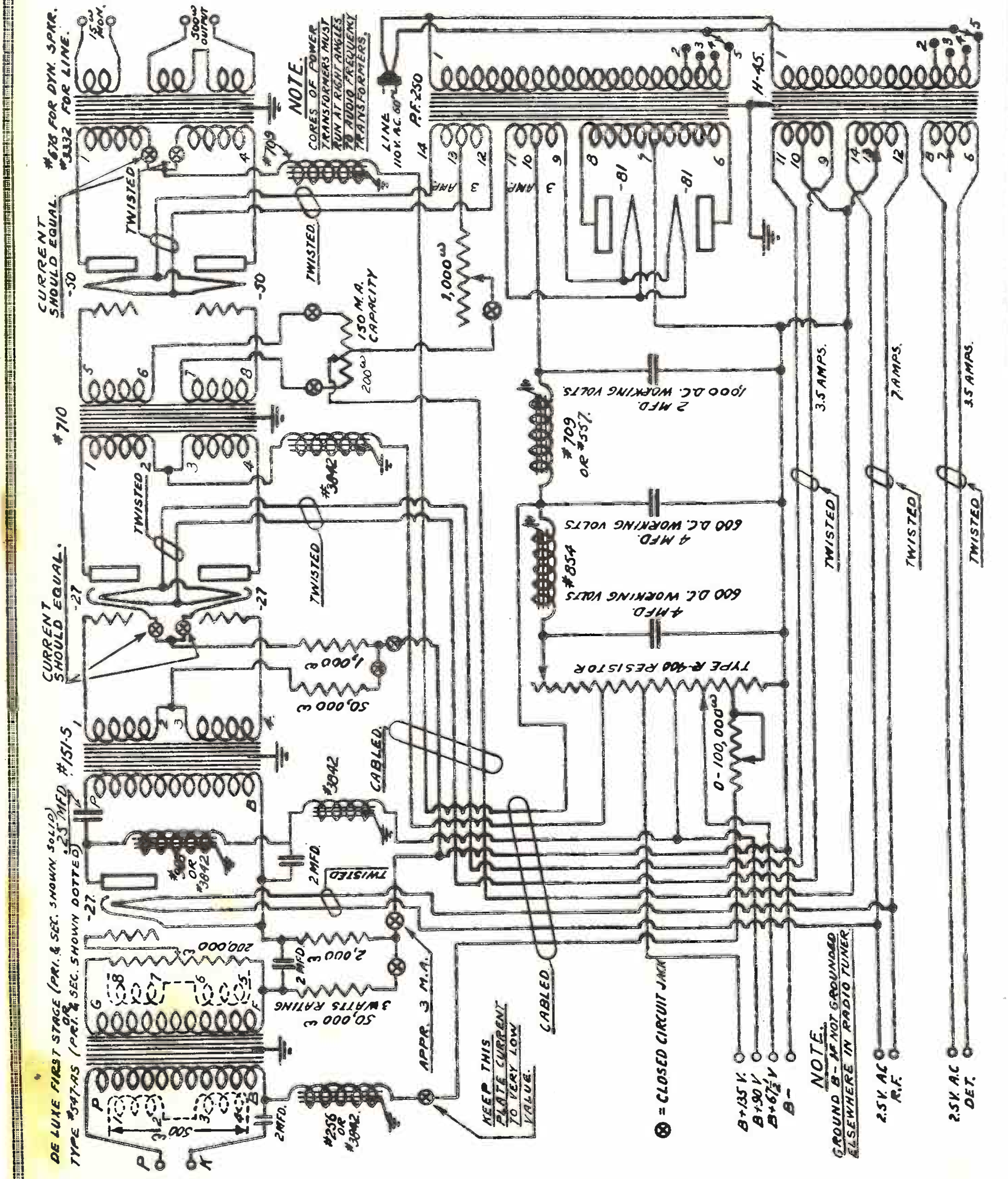

SILVER-MARSHALL

Statement by McMurdo Silver
President, Silver-Marshall, Inc.

It has always been our policy to publish the full technical details of all Silver-Marshall Receivers, for we fully realize that the success of our sets depends not only on careful, painstaking manufacturing, but on the ability of the ultimate consumer to obtain satisfactory service.

We maintain a technical service information department and will be happy to give any legitimate service men or organization complete technical information on any Silver-Marshall Receiver they may be called on to service.

SILVER-MARSHALL, Inc.
6401 West 65th Street - - Chicago, U. S. A.

S-M Radiobuilder

The RADIOBUILDER, Silver-Marshall's official publication, is edited by McMurdo Silver with the thought in mind of giving the service man detailed news from the great S-M laboratories before it is given to the world.

Mr. Silver has earned a reputation of knowing what the public wants, and by regularly reading the RADIOBUILDER, thousands of service men keep IN ADVANCE of the industry. This is proven by the many "scoops" that Silver-Marshall has to its credit: screen-grid circuits, power detection, tuned audio transformers, A.C. screen-grid short-wave receivers, the utilization of FOUR A.C. screen-grid tubes, high-frequency cut-off transformers, and a dozen others. The subscription rate is 50 cents for twelve issues. Don't miss the July issue!

S-M Data Sheets

A Silver-Marshall Data Sheet, giving complete, detailed information, is published on all S-M parts equipment. They are freely supplied to service men and accredited service organizations for a small part of the handling costs—2 cents each. Recent Data Sheets are listed below:

No. 16—712 Tuner (Development from the Sargent-Rayment)

No. 18—722DC Band-Selector Six Receiver

No. 19—692 Power Amplifier ('50 Push-Pull)

No. 20—677B Power Amplifier ('45 Push-Pull)

No. 21—737 Short-Wave Bearcat

No. 22—770 Screen-Grid Auto-Set

VICTOREEN SUPERHETERODYNE

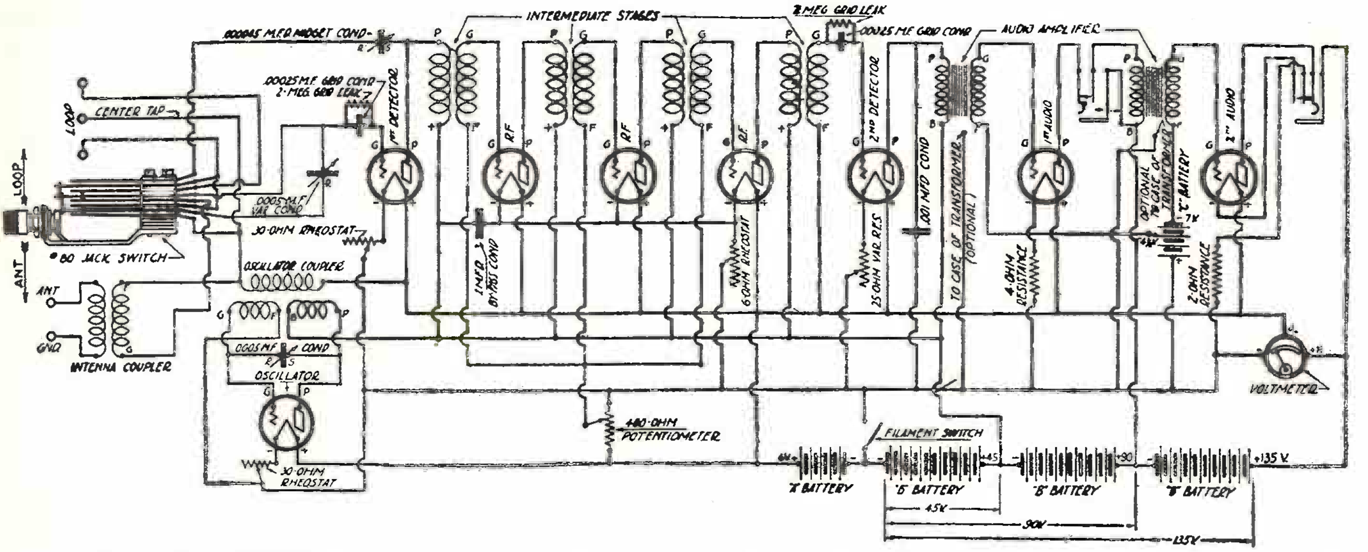

Victoreen Superheterodyne circuit. The double scale volt meter shown in the diagram is used to ascertain the "A" and "B" voltages at all times.

MADISON-MOORE SUPERHETERODYNE

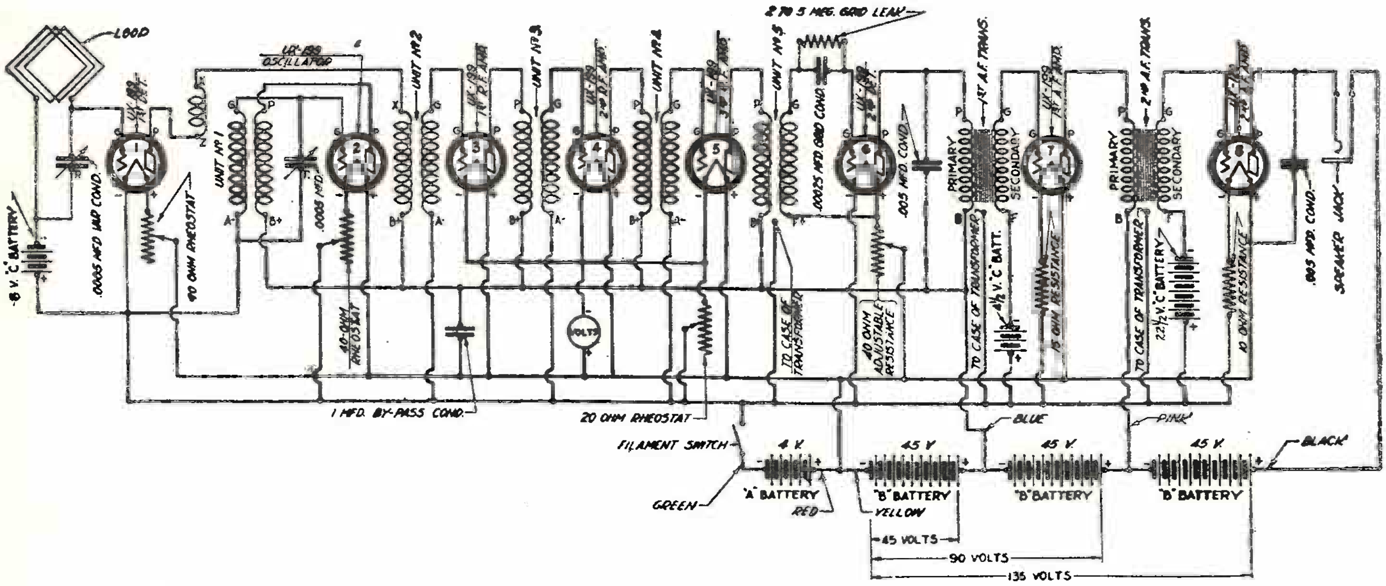

Madison-Moore Superheterodyne circuit. UX-199 tubes are used throughout this receiver with the exception of the last stage of audio, which is a UX-120 power tube.

ST. JAMES SUPERHETERODYNE

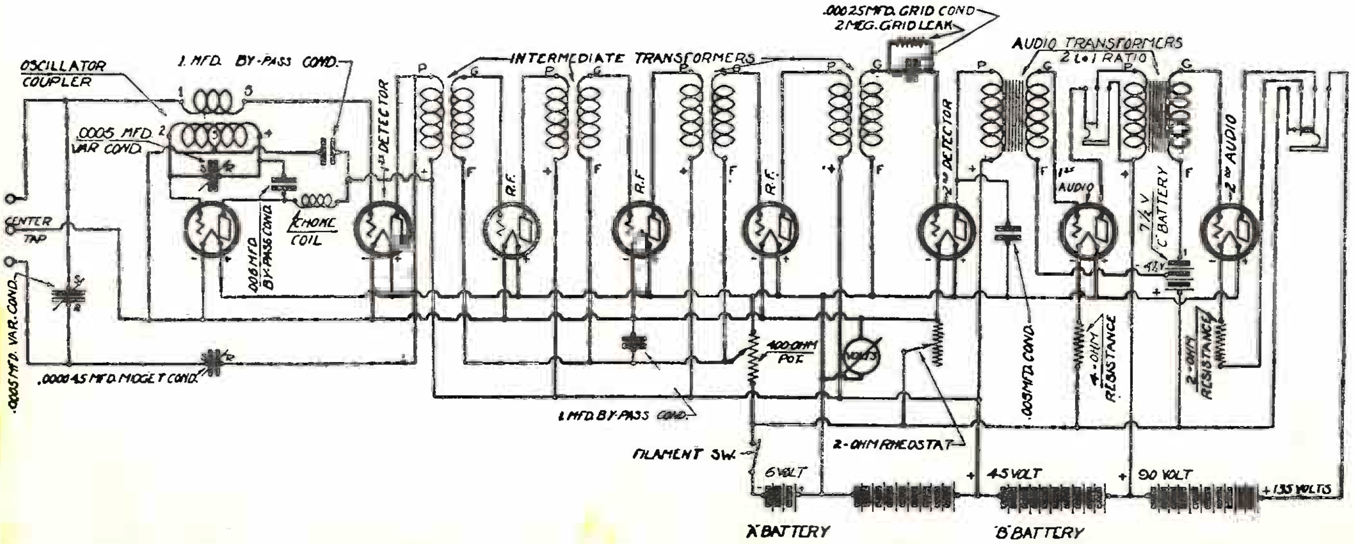

St. James Superheterodyne circuit. A filament control jack is used in the last stage of audio. The filament circuit of the last tube is completed only when a loud speaker is plugged in.

Now!

AMPERITE

Self-Adjusting

LINE VOLTAGE CONTROL

Can Be Installed in ANY Standard Radio

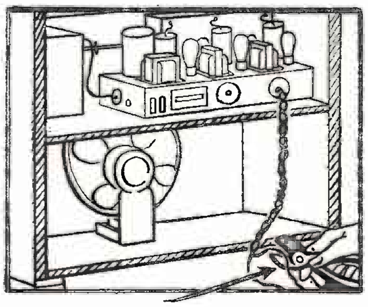

To install the new AMPERITE Line Voltage Control cut one lead of the power supply line or cable at any place between the set and the house socket plug.

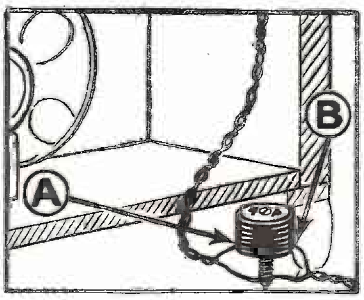

Connect these two cut ends to the terminals of an AMPERITE adapter socket as shown by line "A & B" or to any standard UX tube socket. If a tube socket is used, make connections to either two opposite terminals, leaving the remaining two terminals blank.

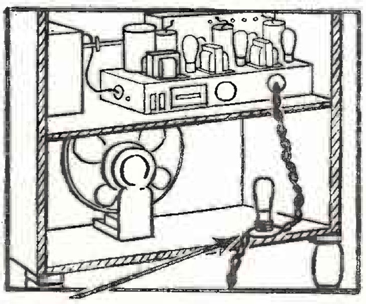

Mount the adapter or socket at any convenient place inside the cabinet. Insert the proper AMPERITE Line Voltage Control tube and the receiver is ready for operation. When making the above connections, first disconnect the house line plug.

Insures Perfect Operation of A. C. Receivers Regardless of Line Variations

THE finest designed receiver and the best tubes can function properly only within a voltage range of plus or minus 5 per cent. of rated specifications.

And yet, nationally sold radio sets are subjected to line voltages varying as much as 30 per cent.

The AMPERITE Self-Adjusting Line Voltage Control *automatically* regulates the voltage from the A.C. power main. It assures the right voltage for most efficient operation, regardless of line variations, over a 30-volt range between 95 and 145 volts.

AMPERITE operates to a degree of accuracy unobtainable by any other means. It prevents fluctuating line voltage from damaging tubes and filter equipment. It is trouble free and long-lasting.

Many of the newer makes of receivers are equipped for AMPERITE. A new development now makes it possible to install AMPERITE in *any* A.C. receiver, regardless of standard equipment, in only a few minutes and at very small cost.

There is an AMPERITE available for any popular electric set. The Amperite Line Control Guide shows the proper type AMPERITE for every popular make of electric radio set. Ask your jobber for it or write direct to us. AMPERITE is an ideal product for the service man as it assures improvement to any make of radio.

AMPERITE is manufactured and guaranteed by the world's largest makers of automatic voltage controls—exclusively.

AMPERITE Corporation
561 Broadway, New York, N. Y.

AMPERITE

Self-Adjusting

LINE VOLTAGE CONTROL

GRAYBAR ELECTRIC CO.

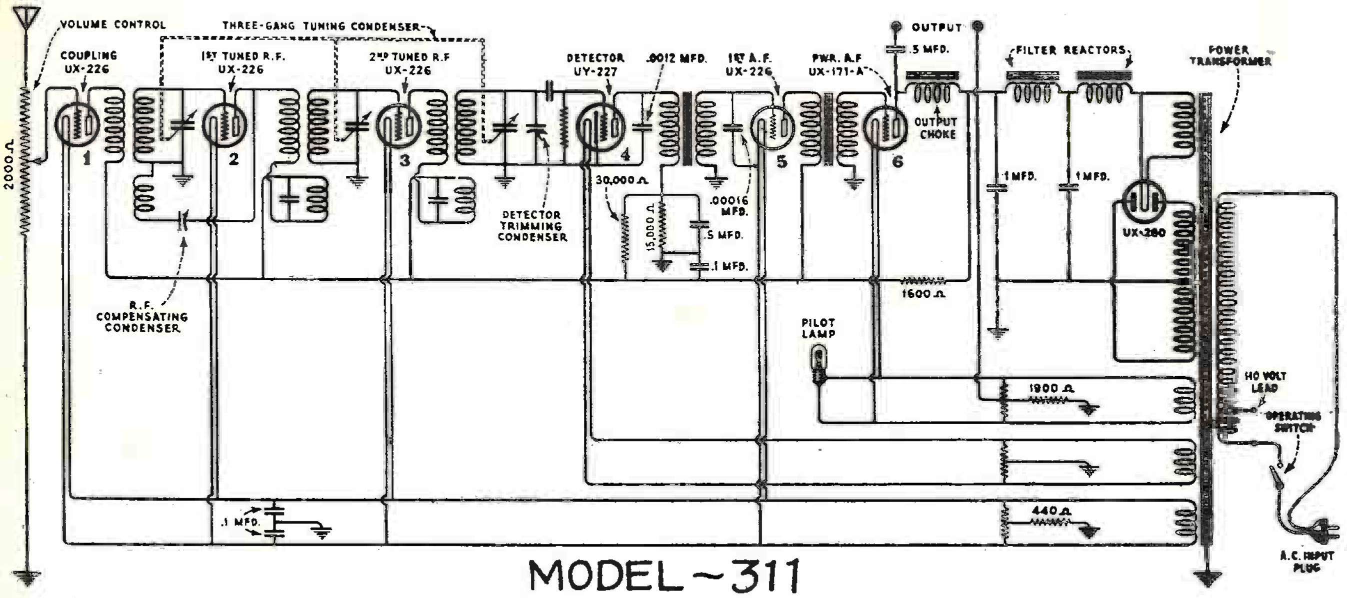

MODEL~311

Schematic circuit diagram of receiver and socket power unit—all grounds are connected to frame and metal cabinet

C.R.LEUTZ INC.

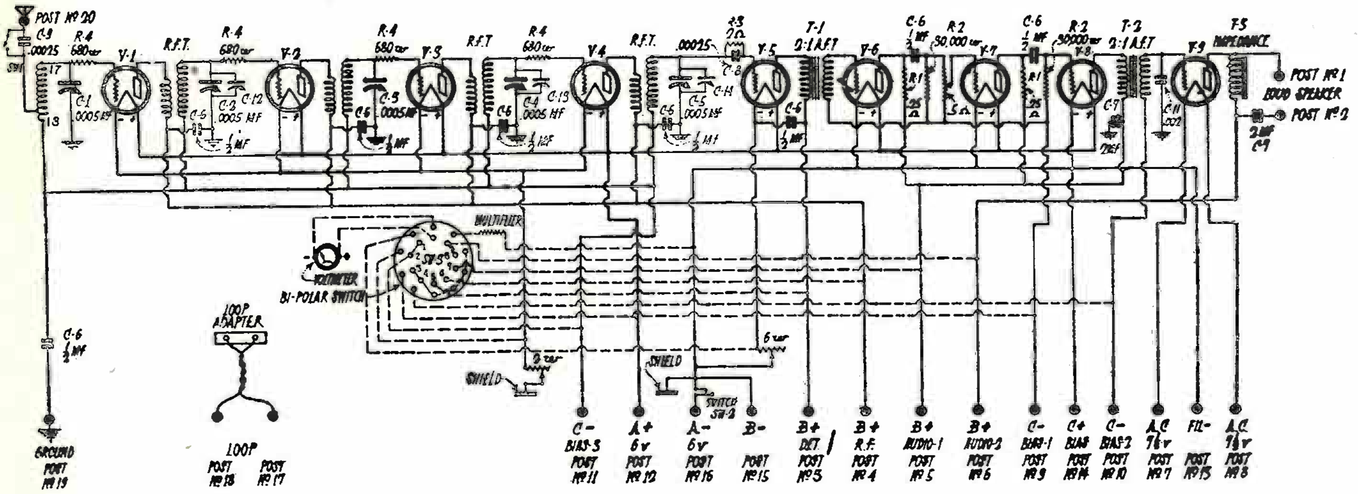

Circuit diagram of the Leutz Universal Trans-Oceanic receiver. By means of a voltmeter and nine-point switch all A, B and C voltages from 0 to 500 are read directly

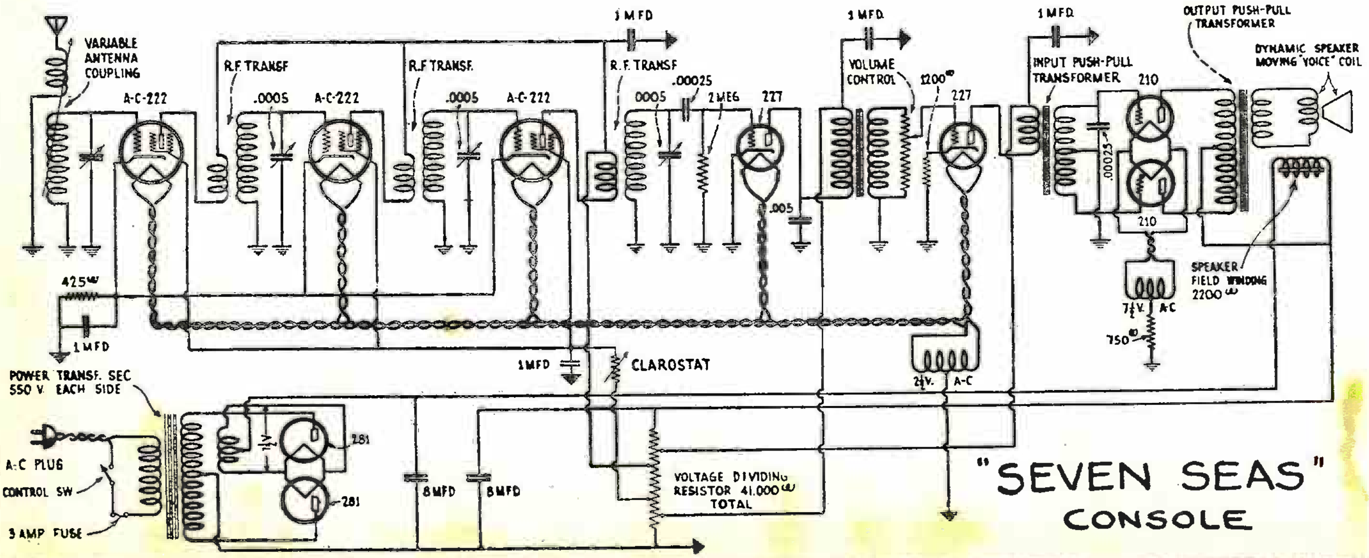

"SEVEN SEAS" CONSOLE

Guard your Reputation

in service work . .

use DURHAM

Metallized RESISTORS

and insure satisfied customers

8 POINTS OF SUPERIORITY

- Metallized Resistors are conservatively rated as to power.
- May be safely loaded to full capacity continuously and will carry a considerable overload.
- Accurately rated . . . units vary less than 10% plus or minus rated value.
- Metallized Resistors will not exceed their original tolerance even after years of use.
- Ratio of AC to DC resistance is practically 1 to 1, making them ideal for filter systems.
- Offered in all types . . . all carefully designed to provide maximum compactness, ease of assembly and rugged strength.
- Metallized Resistors are notably quiet, even after years of service.
- Metallized Resistors insure a lower change of resistance due to the homogenous metal coating.

Durham Metallized Resistors are supplied in *any intermediate values* from 50 to 10,000,000 ohms. Complete stocks assure prompt deliveries for your service requirements.

Write for Guide "G. B." today

Shows how to locate faulty reception and gives proper resistor values for nearly every make of radio . . . the most complete guide ever offered radio service men.

Metallized

RESISTORS

INTERNATIONAL RESISTANCE CO., 2006 CHESTNUT ST., PHILA., PA.

REMLER RADIO CORP.

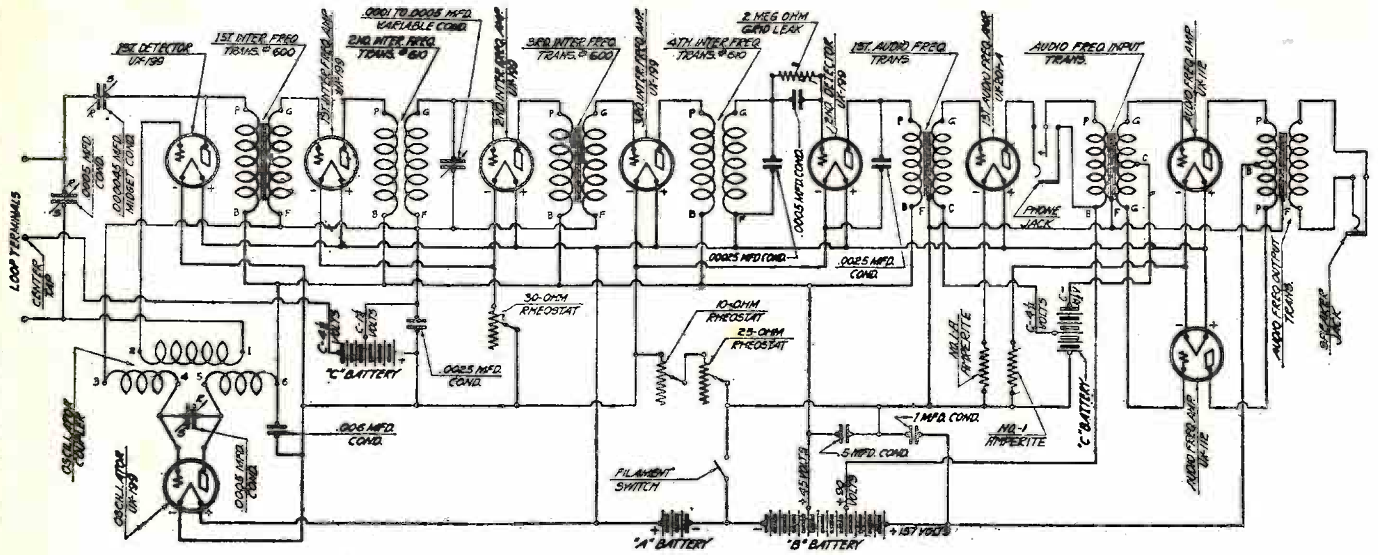

Schematic Wiring Diagram of the Remler 45 K. C. Super-Heterodyne Receiver, Using the Rice Split-Loop to Obtain Regeneration.

SILVER MARSHALL, Inc.

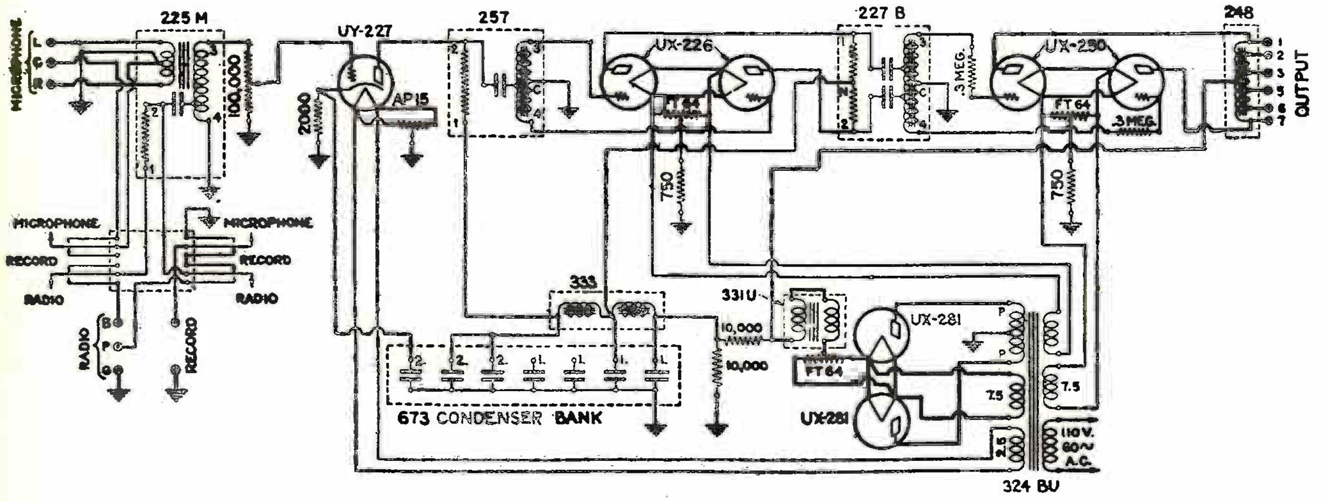

Schematic Diagram of the SM 690 Public Address Amplifier.

AUTOMATIC RADIO AND MFG. CO.

("TOM THUMB" PORTABLE)

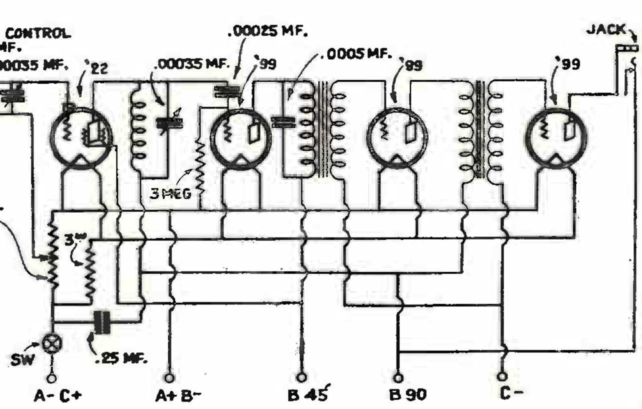

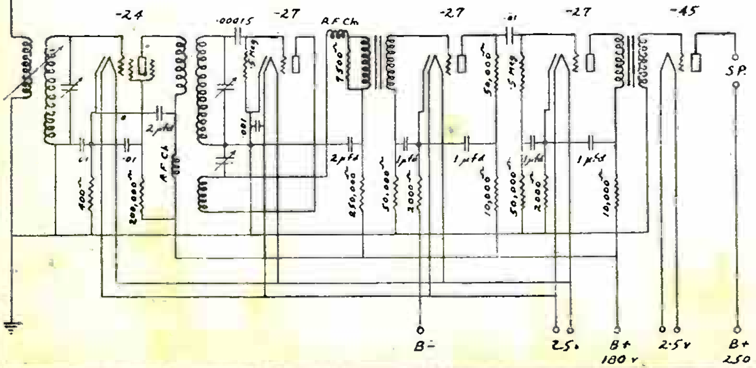

INSULINE CORP. OF AMERICA

(A.C.-S.W.-KIT)

Here's the Solution *of Your* Condenser Troubles!

DON'T worry about condenser problems. If they involve 8 MFD or more—let the Sprague electrolytic condenser take care of them. For this new, perfected condenser is the most adaptable and efficient unit you ever saw. Only 1⅜" in diameter and only 5" height overall. Yet it rates 8 MFD capacity with peak voltage of 430 DC.

It has an exclusive, one-piece, round-edged anode without a single soldered or welded joint anywhere. The individual screw socket mounting makes it easily adaptable to use in any set.

And because of the Sprague standardized unit construction—you buy just the amount of capacity you require, without paying a premium for useless excess or for "special built" jobs.

Write for illustrated folder on the Sprague electrolytic condenser.

SPRAGUE SPECIALTIES COMPANY
QUINCY, MASS.
Manufacturers also of the well-known
SPRAGUE PAPER CONDENSER

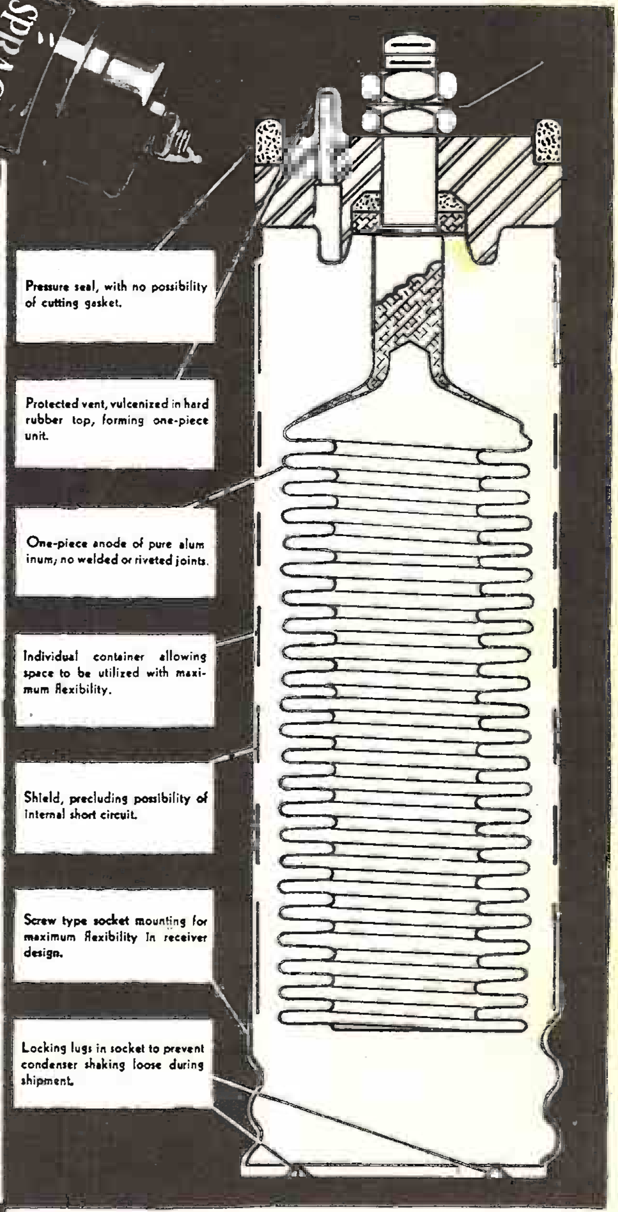

SPRAGUE
Electrolytic
CONDENSER

Capacity **8 MFD**
Peak Voltage **430 DC**
Can Negative

STANDARD RADIO CORP.

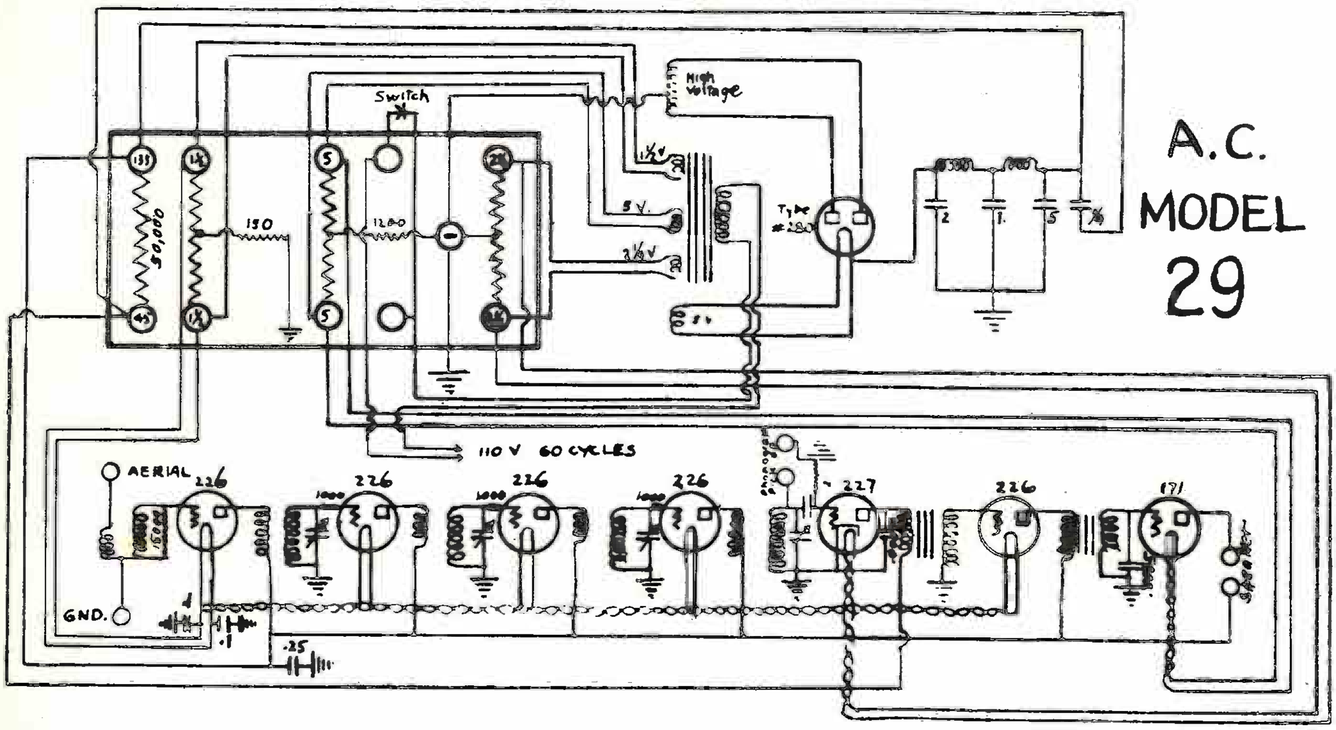

A.C. MODEL 29

BLAIR RADIO CO.

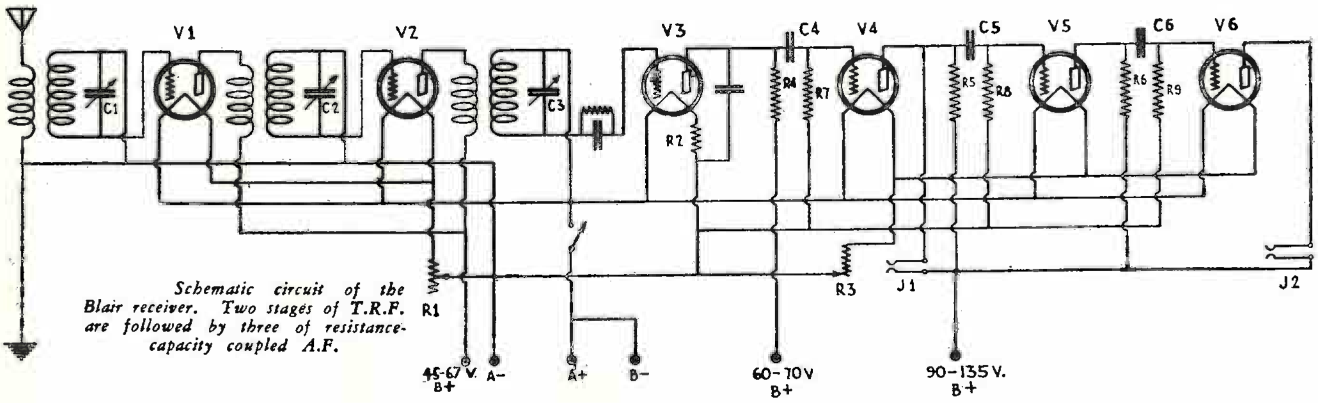

Schematic circuit of the Blair receiver. Two stages of T.R.F. are followed by three of resistance-capacity coupled A.F.

AMERICAN TRANSFORMER CO.

The Amertran Type 2-AP Audio Amplifier and Type 21-D "Hi-Power Box."

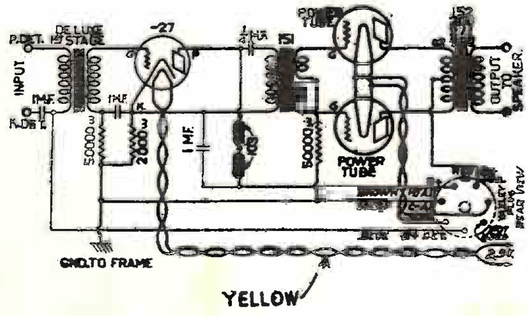

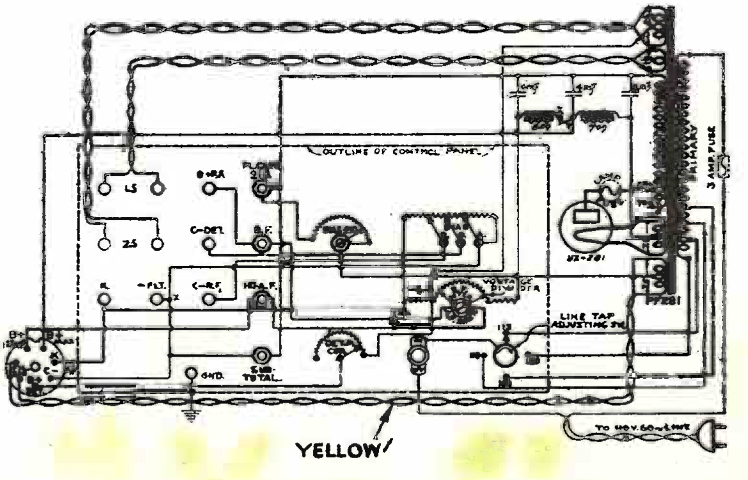

"Supreme by Comparison"

Simplify your choice of testing instruments . . . enjoy the profits and prestige of "Supreme" standards . . . standardize on Supreme Testing Instruments . . . "Supreme by Comparison."

Size $7\frac{1}{2}$ x $12\frac{3}{16}$ x $18\frac{7}{16}$

Dealers' Net Price, F.O.B. Greenwood, Miss. $\$139^{50}$

Also available in smaller case for the radio man who does not care to carry spare parts, tubes, etc., in the same unit.

SUPREME

Radio Diagnometer

MODEL 400-B

conceivable

Makes every test on any Radio Set-

In every competition and comparison Model 400-B Supreme Diagnometer is acknowledged "Supreme by Comparison"—without a rival in its field. Amazingly complete in its testing facilities . . . providing analysis of Pentode, Screen Grid and Auto Receivers in addition to its countless circuit combinations, Model 400-B is admittedly the marvel of the radio servicing industry. Endorsed and recommended by practically every servicing authority.

Put your service on a par with 1930 proficiency . . . Modernize with the Supreme Diagnometer. It pays for itself in a few months . . . Faster and more accurate servicing means greater profits. So far ahead in its field that it will be modern years from now!

SUPREME TUBE CHECKER

MODEL 19

Size 3¼ x 9⅞ x 6 1/16. Weight 6 lbs.

Dealers' Net Price, F.O.B. Greenwood, Miss.

Counter Type	Portable Type
$\$26^{95}$	$\$29^{95}$

A sensational value in a counter or portable Tube Checker. Tests all tubes, including Pentode, Screen Grid, Second plate 280 and 2-volt '30 series, all without adapters. 8 mil. scale provides easy and accurate reading. Simple in operation—sturdy in construction. Model 19 provides accuracy and speed in tube testing at an exceptionally low price. Large 3½" D'Arsonval meters — all readings plainly marked on panel. Line switch.

SUPREME TUBE TESTER

MODEL 50

Size 5⅛ x 10 9/16 x 7 5/16. Weight 11¾ lbs.

Dealers' Net Price, F. O. B. Greenwood, Miss. $\$98^{50}$

A super efficiency instrument invaluable to technicians, laboratories, public address systems, sound picture equipment. Equipped with automatic voltage regulator. Manufactured under license from Ward-Leonard Electric Co. The finest in tube-testing equipment.

SUPREME OHMMETER

MODEL 10

Size 2 x 2 5/16 x 4¾. Shipping Weight 12 oz.

Dealers' Net Price, F. O. B. Greenwood, Miss. $\$18^{50}$

Embodying most advanced features in Ohmmeter design. Directly calibrated in ohms. Equipped with zero adjustor. Scale 0 to 10,000 ohms. Pocket size for portability. Extremely handy and useful for continuity checking.

SUPREME

Testing Instruments

"SUPREME BY COMPARISON"

A REVOLUTIONARY SET ANALYZER

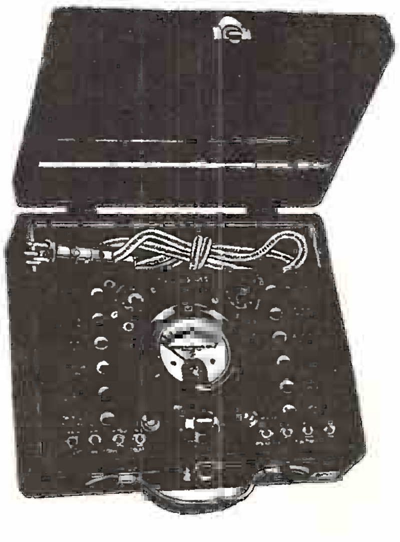

25 TESTING INSTRUMENTS IN ONE

All Readings on One Meter
Only One Meter to Read

SUPREME SET ANALYZER

MODEL 90

Dealers' Net Price, F.O.B. Greenwood, Miss. Size 4¼ x 9¼ x 11¼. Shipping weight 6 lbs. $\$78^{50}$

It provides 79 possible analytical readings
It furnishes A.C. and D.C. Voltage and Current readings on ONE METER
Voltage readings up to 900 volts
Current readings to 300 Milliamperes
Resistance 1000 Ohms per volt A.C. or D.C.
External pin jack connections
High and low resistance measurements
Polarity indication
Pentode Testing — Auto Receiver Testing
IT DOES MORE THAN ANY THREE OR FOUR-METER Set Analyzer on the Market
QUICKER, SIMPLER and with a higher degree of accuracy — plus the advantage of ONLY ONE METER TO READ!

"SUPREME BY COMPARISON"

Most good distributors carry the complete line of Supreme Instruments in stock. If yours cannot supply you, write direct to

Supreme Instruments Corp.

373 Supreme Building :: Greenwood, Miss.

Distributors in All Principal Cities

Service Depots in New York, Philadelphia, Pittsburgh, Chicago, Kansas City, Seattle, Toronto, San Francisco

AERODYNE SIX

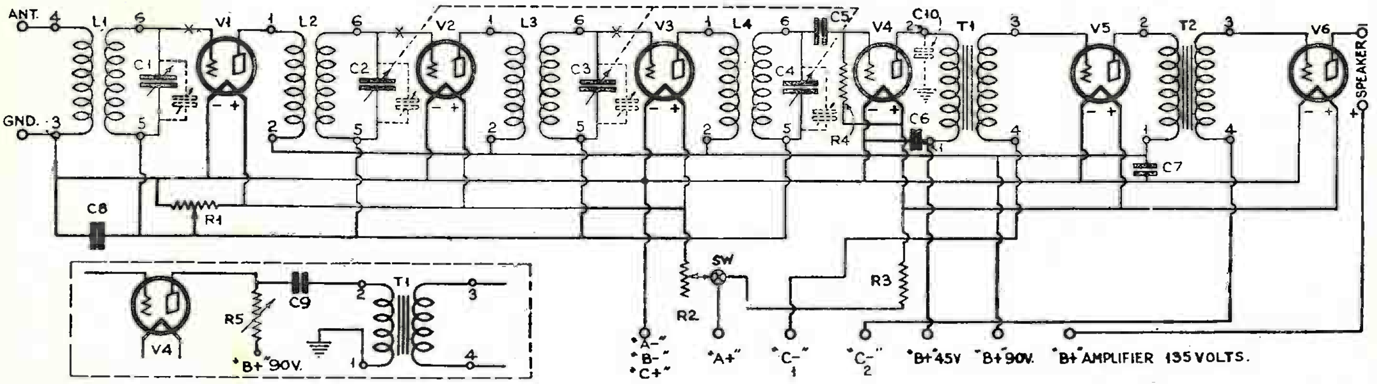

The "Aerodyne Six" was in its day a very good receiver; with certain refinements introduced, it will serve those whose needs are satisfied by a battery-operated set. A few simple changes are shown by the dotted lines and Xs in the original circuit, above; and the recommended "parallel-plate feed" detector circuit is given at the lower left; the plate should be by-passed to ground by C10 in either case.

AMBASSADOR FOUR

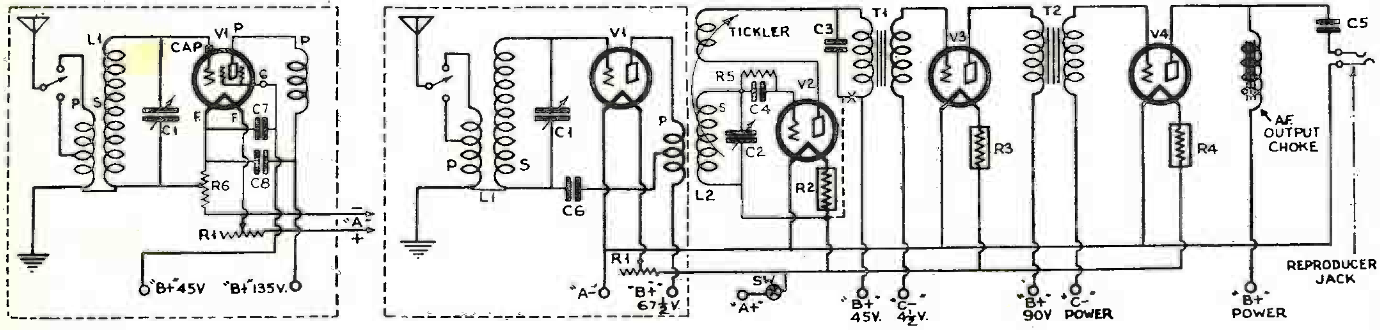

At the right, the "Ambassador Four" receiver as originally designed. Its first R.F. stage, indicated by a dotted square, may be replaced by the screen-grid stage shown in the dotted panel at the left.

MAGNAVOX CO.

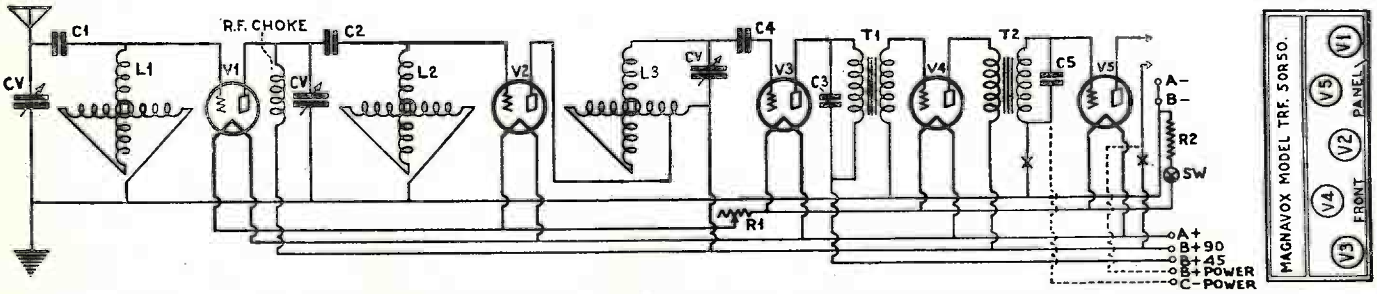

Circuit arrangement of the Magnavox Types TRF-5 and TRF-50 receivers; Note that this single-dial set is tuned by variable inductances (variometers) instead of the more usual variable condensers. Servicing one of these receivers requires treatment different from that which would obtain when the more usual type of receiver is being serviced.

CONTINENTAL WIRELESS & SUPPLY CO.

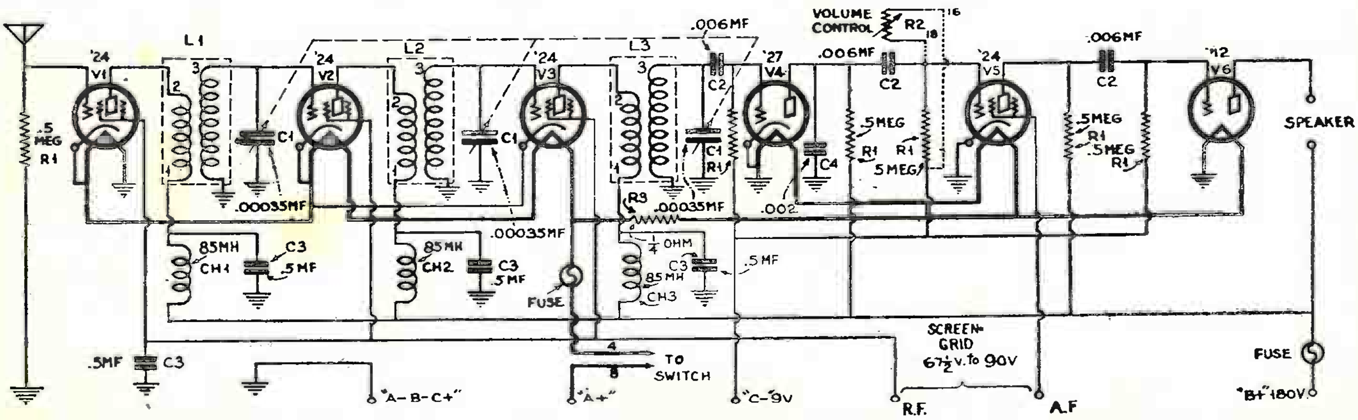

Latest circuit of "The Voice of the Road" automobile receiver. The amplification provided is high in both radio and audio channels, giving sensitivity with the small aerial system which can be accommodated in a car. Note the series filament connections and the separate connection for A.F. screen-grid bias.

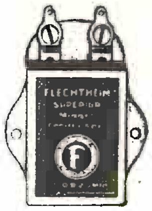

By-Pass
250-v. D.C.

AN EVER INCREASING NUMBER

Filter
450-v. D.C.

of

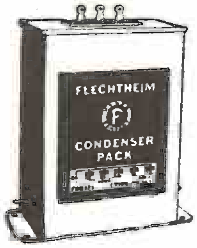

Blocks
450 to 1000-v.
D.C.

RADIO SERVICE MEN,
CUSTOM SET BUILDERS,
EXPERIMENTAL LABS.,
BROADCAST STATIONS,
SCHOOLS, COLLEGES,
UNIVERSITIES,
AMATEURS,
HIGH-POWER
AMPLIFIER
CONSTRUCTORS,
TECHNICIANS,
AIR TRANSPORT LINES,
SHORT-WAVE
FANS,
ETC.

High
Voltage
800-v. D.C.

ARE USING FLECHTHEIM SUPERIOR CONDENSERS EXCLUSIVELY

High Tension
1000-v. D.C.

3 VERY IMPORTANT REASONS Why:

1—Highest Quality Materials and Workmanship

2—Thoroughly Dependable and Reliable

3—Priced Very Reasonably

— IMMEDIATE SHIPMENT OF ALL ORDERS —

Write for Catalog No. 22 and name of nearest Dealer

Transmitting
1500 to 5000-v. D.C.

A. M. FLECHTHEIM & CO., Inc.

134 Liberty Street, New York, N. Y.

UNITED AIR CLEANER CO.

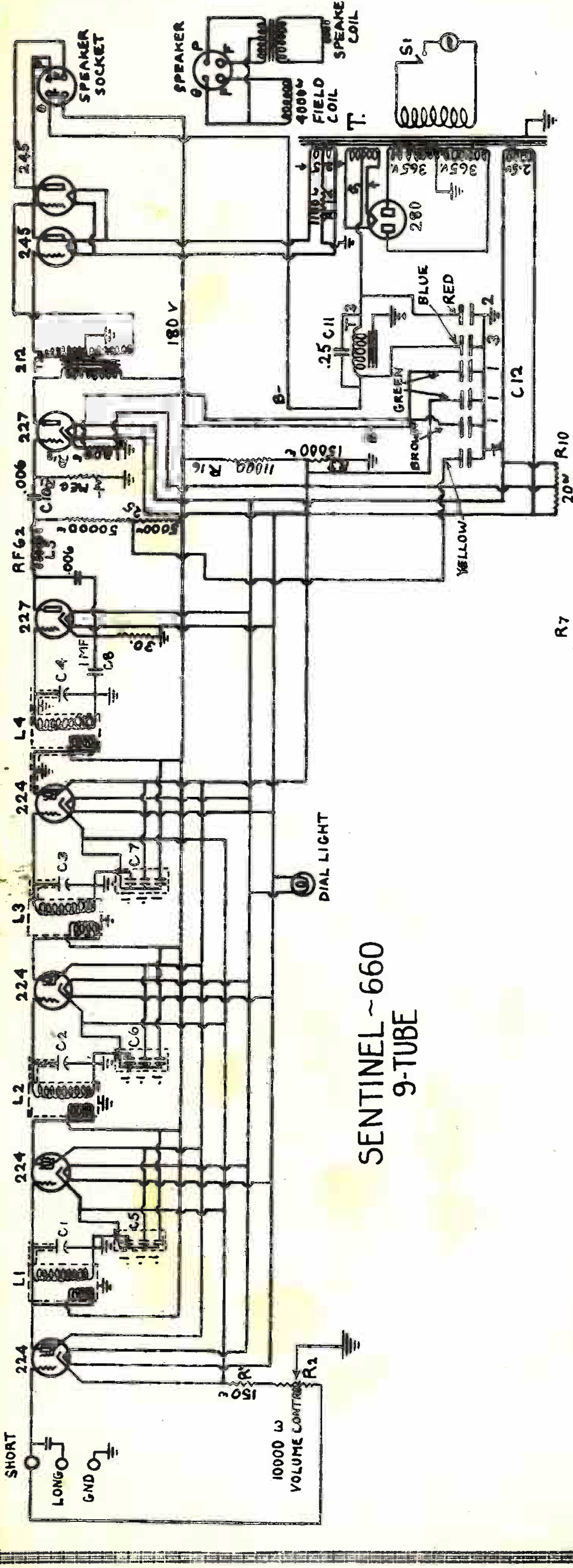

SENTINEL~660
9-TUBE

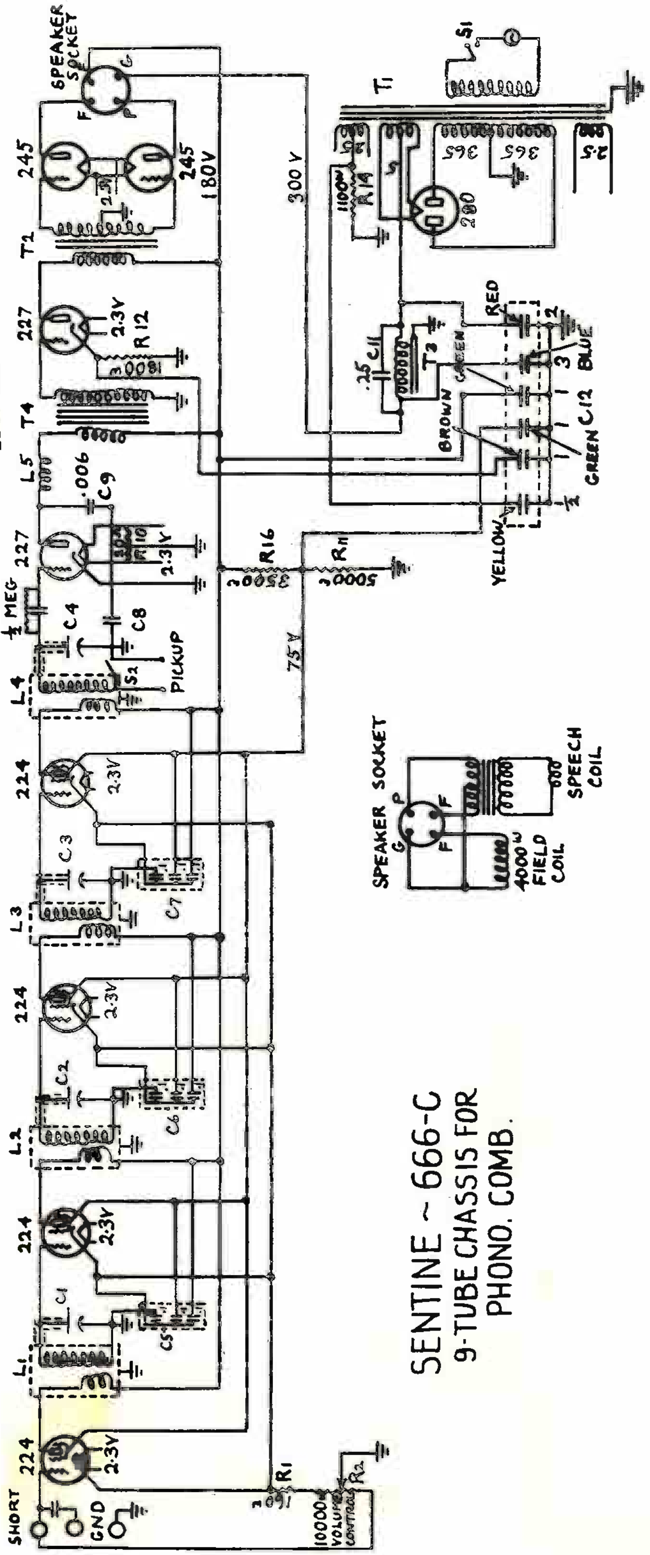

SENTINE~666-C
9-TUBE CHASSIS FOR
PHONO. COMB.

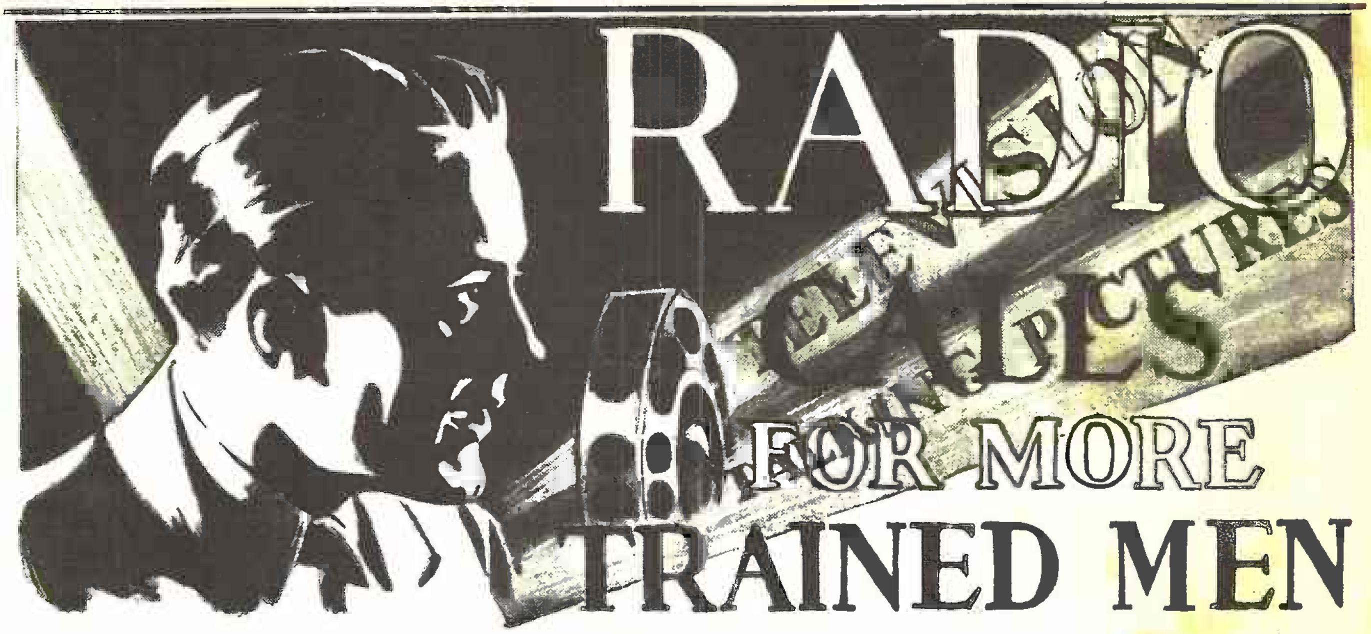

R. T. I. ANSWERS THE CALL

R. T. I. training is so closely linked with the development of Radio—past, present and future—that it deserves your consideration for what it can do for you or someone you know who wants to step up in the field. It is time-tested (being founded upon a course of training started early in 1922) and hundreds of successful Radio Servicemen, dealers, salesmen, broadcast station operators, special set builders, etc., give the training full credit for their success.

Today, R. T. I. training constantly revised and amplified, is as near perfect as time, money, brains and experience can make it. It is endorsed by leading radio men and radio trade associations.

SUPERVISED BY WELL KNOWN RADIO MEN

R. T. I. Home Training is practical and up-to-date. It is prepared by experts. Both lessons and training methods are continually supervised by a board of men who are actively engaged in Radio as executives with prominent concerns — manufacturing, jobbing, retailing, servicing, broadcasting, engineering, etc.

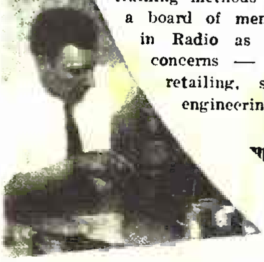

The Booklet tells how R. T. I. gives practical home training.

Complete Training for

"SERVICE MEN"

The problem of training men for Radio servicing is solved by R. T. I. Everything that comes up in a service man's daily work is covered from the minute he rings the customer's door bell until he leaves her (or him) with a satisfied smile. It's the training that the radio industry wants men to have. It is practical, thorough and complete. An R. T. I. service man also receives a pocket size loose-leaf Radio Service Manual covering the sets of 25 prominent manufacturers—pictures—wiring diagrams—installation—"trouble-shooting"—repair, etc. It goes along with the course and is very valuable being kept up-to-date.

ALL BRANCHES COVERED

Television and Talking Pictures, Too

R. T. I. training is so complete there is hardly a subject that is not well covered. It includes the latest in Television, Talking Pictures, Public Address Systems, Short-Wave, etc. The R. T. I booklet gives complete information.

LIFETIME CONSULTATION

Free of Extra Cost to Everyone Who Enrolls

In addition to the regular training Work Sheets which are constantly revised, every R. T. I. student is kept up-to-the-minute with bulletins of latest information right out of the world's laboratories, work shops, factories, etc.

Consultation Service is also supplied on problems of engineering, installation, etc. Answers promptly given by letter, wire or air mail by the R. T. I.' engineering staff out of their own experience, their library or by cutside personal investigation.

LET F. H. SCHNELL AND R. T. I. ADVISORY BOARD HELP YOU

Mr. Schnell, Chief of the R. T. I. Staff, is one of the ablest and best known radio men in America. He has twenty years of Radio experience. First to establish two-way amateur communication with Europe.

- Former traffic manager of American Radio Relay League. Lieutenant Commander of the U. S. N. R. Inventor and designer of Radio apparatus. Consultant Engineer to large Radio manufacturers.

Assisting him is the R. T. I. Advisory Board composed of men prominent in the Radio industry.

**R. T. I. BOOKLET
SENT
FREE**

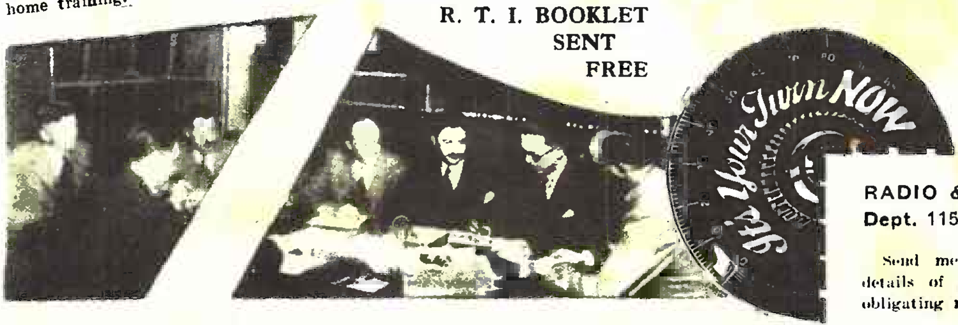

THE R. T. I. ADVISORY BOARD of men actively engaged in the Radio Industry, supervises the preparation, revision and rendering of training service. The R. T. I. booklet tells you who these men are.

Inquiries Invited

We shall be glad to send you our booklet and answer any inquiries about the value of R. T. I. training for you.

RADIO & TELEVISION INSTITUTE
Dept. 115B, 4806 St. Anthony Ct., Chicago

**RADIO & TELEVISION INSTITUTE
Dept. 115B, 4806 St. Anthony Court, Chicago.**

Send me Free and prepaid your booklet and full details of your three-in-one Home Training (without obligating me in any way).

Name ....

Address ....

City.. State.......................

UNITED AIR CLEANER CO

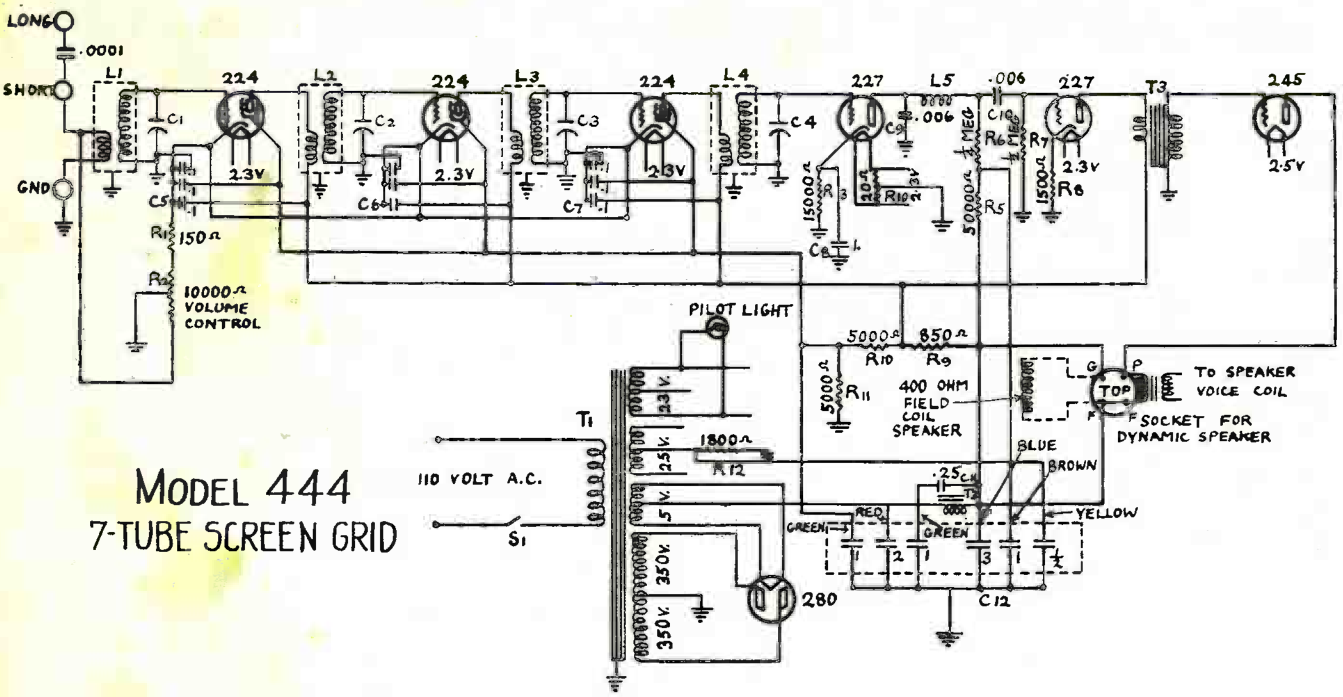

MODEL 444
7-TUBE SCREEN GRID

BUCKINGHAM RADIO CORP.

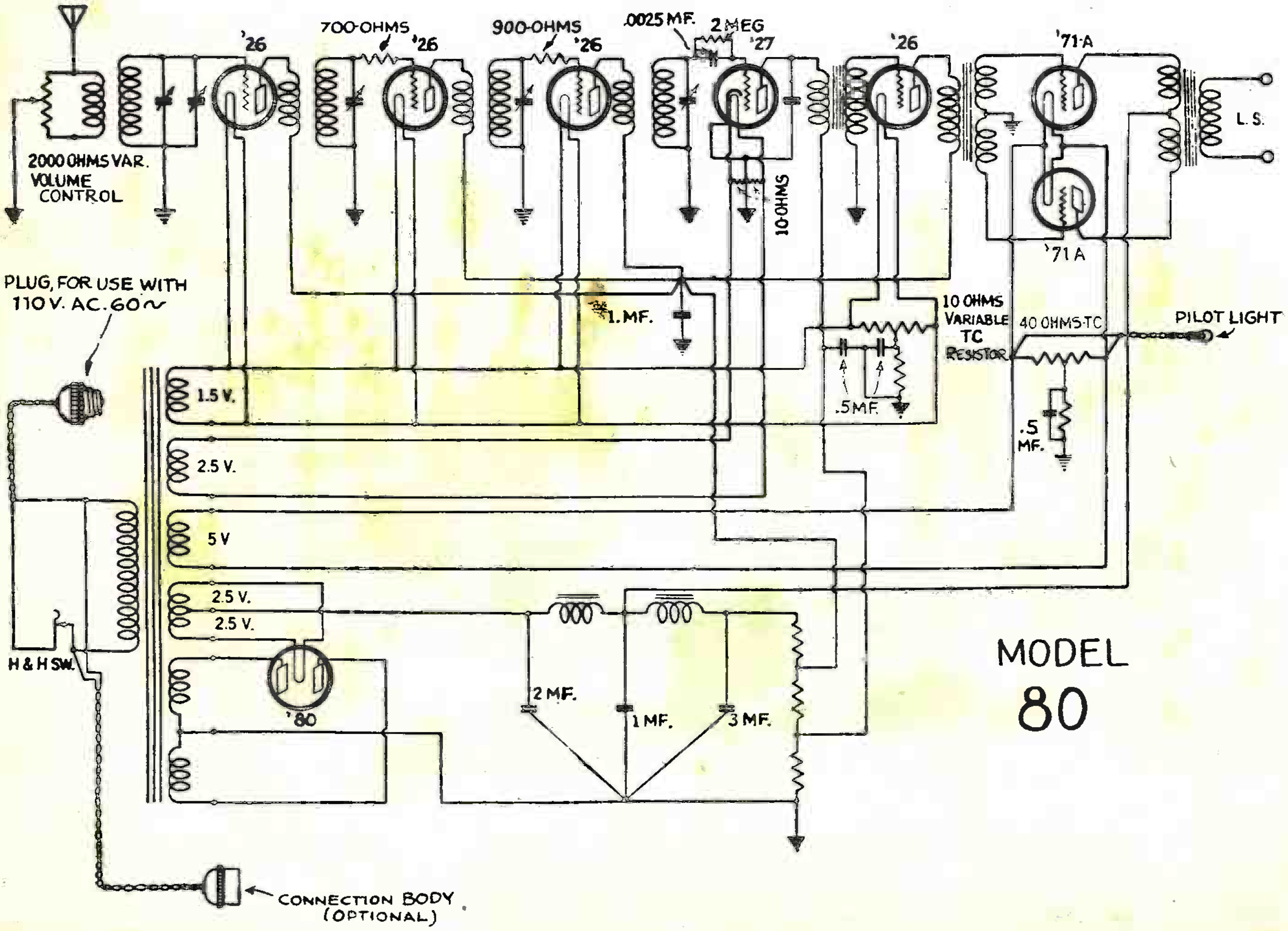

MODEL
80

ANY RADIO SERVICE MAN WILL MAKE MORE MONEY

FOR HIMSELF OR HIS EMPLOYEES

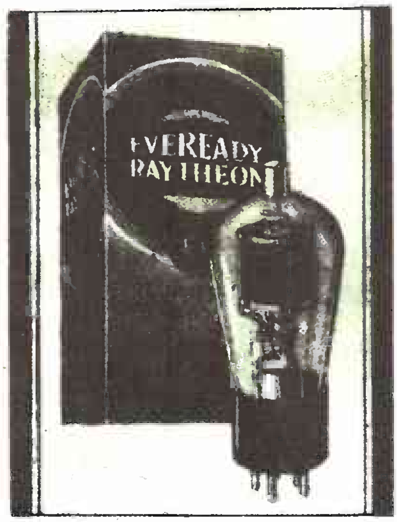

as soon as he realizes that a thoroughly satisfied radio set owner is his best advertisement and endorsement.

Successful service men are always carefully building up an ever-increasing patronage of thoroughly satisfied set owners, thereby securing a continually growing all-the-year-'round income.

Thousands of successful service men have already discovered that a home demonstration with a set of EVEREADY RAYTHEONS helps them make more money because these tubes completely satisfy the most critical set owner.

Everyready Raytheon 4-Pillar Tubes incorporate ALL of the latest developments in the tube art. In addition to their superior electrical design, they have a patented 4-Pillar type of mechanical construction and die spacing which insures that the uniformly excellent characteristics built into the tubes at the factory will be unimpaired by shipping or handling.

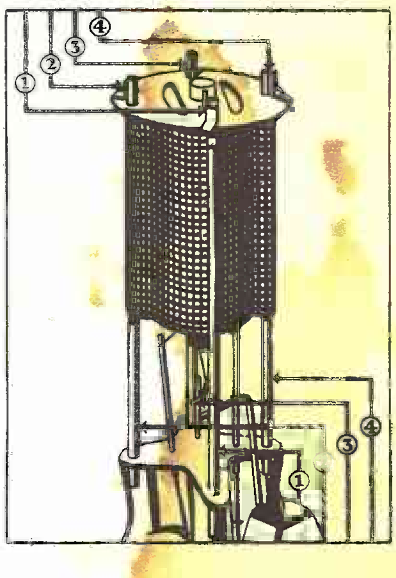

EVEREADY RAYTHEON 4-PILLAR TUBES

ARE

QUICK ACTING

The listener hears the program in a few seconds because of the perfected space insulated heater and high emission cathode.

HUMLESS

because of the patented non-inductive heater and electrostatic shielding system.

NOISELESS

because all metallic joints in the structure and shielding system are spot welded.

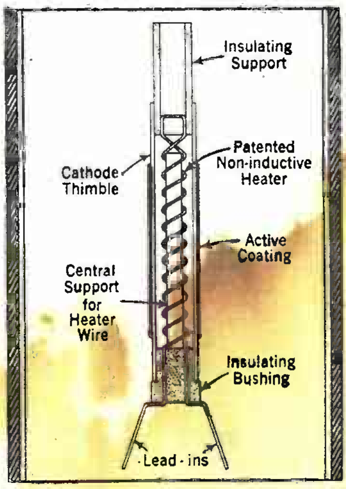

LONG LIVED

because of careful selection of materials, rigid inspection in manufacturing and the use of a patented continuously active "getter" for maintaining a high vacuum throughout the life of the tube.

VERY UNIFORM

because of the patented 4-pillar construction and die spacing of the heater, cathode, grid and plate elements.

GUARANTEED TO GIVE COMPLETE SATISFACTION

All Eveready dealers are authorized to replace defective tubes.
A very complete chart showing the electrical characteristics and required operating voltages of all receiving tubes will be sent free of charge to all service men upon request.

NATIONAL CARBON CO., INC.
General Offices: New York, N. Y.
Branches:
Chicago - Kansas City - New York - San Francisco
Unit of Union Carbide UCC *and Carbon Corporation*

BROWNING DRAKE CORP.

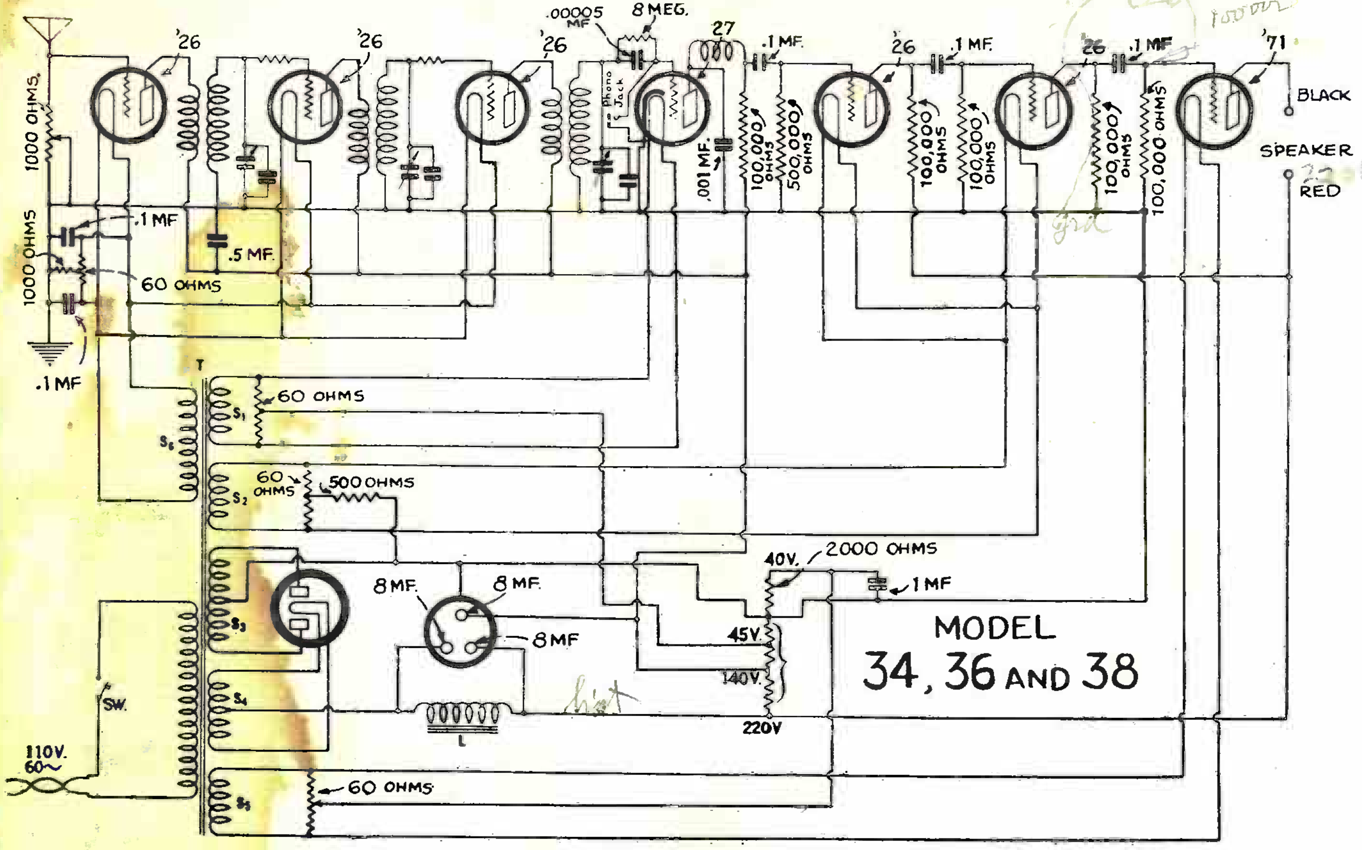

MODEL 34, 36 AND 38

WEBSTER ELECTRIC CO.

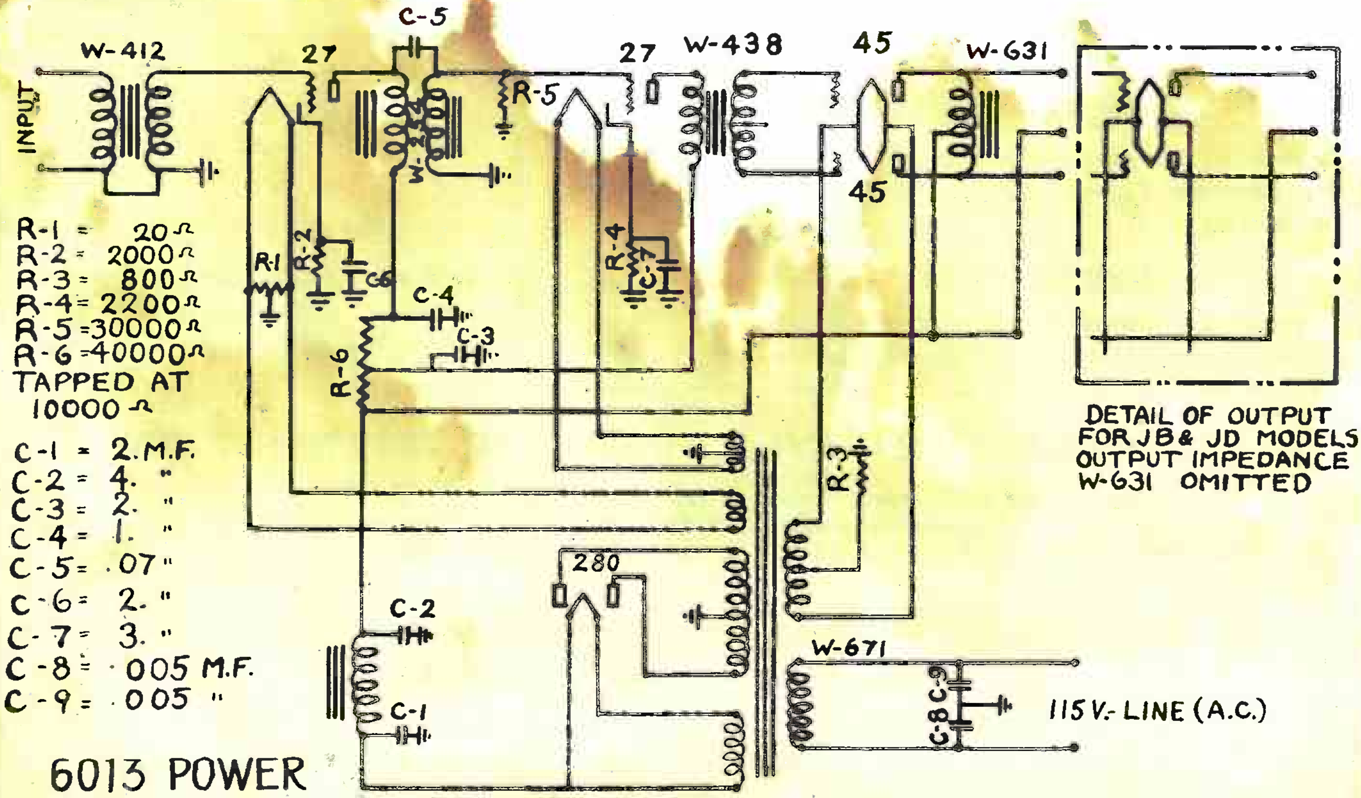

R-1 = 20Ω
R-2 = 2000Ω
R-3 = 800Ω
R-4 = 2200Ω
R-5 = 30000Ω
R-6 = 40000Ω
TAPPED AT 10000Ω

C-1 = 2. M.F.
C-2 = 4. "
C-3 = 2. "
C-4 = 1. "
C-5 = .07 "
C-6 = 2. "
C-7 = 3. "
C-8 = .005 M.F.
C-9 = .005 "

DETAIL OF OUTPUT FOR JB & JD MODELS OUTPUT IMPEDANCE W-631 OMITTED

6013 POWER AMPLIFIER USED IN CAPEHART ORCHESTROPE MODEL-28-GB.

Discriminating Service Men Follow the Choice of Well-known Engineers and Specify

Polymet Products

These finely built parts are used by practically all leading radio receiver manufacturers, following thorough and successful laboratory tests.

ENGINEERS DO NOT GUESS—THEY KNOW!

FILTER BLOCKS

The Standard
of the Industry
Built to specification

BY-PASS CONDENSERS

In stock in all usual capacities

UNCASED PAPER CONDENSER SECTIONS

For repair work

ELECTROLYTIC CONDENSERS

In single, double and triple units

MICA CONDENSERS

Postage Stamp Type
Large Molded
Small Molded

FIXED RESISTORS

Wire-wound Tubular
Flat Strip—Flexible
Grid Leaks

VARIABLE RESISTORS

Carbon Volume Controls
Wire-wound Volume Controls
Rheostats—Potentiometers

TRANSFORMERS

Audio Transformers
Power Transformers
Standard Choke Units

COIL WINDINGS

All types of coils,
except radio frequency,
built to specification

MAGNET WIRE

Enameled Wire
Sizes, 18 to 42—in case lots

A copy of Special Service Men's Catalog of
POLYMET RADIO ESSENTIALS
will be sent on request.

POLYMET MANUFACTURING CORP.

World's Largest Manufacturers of Radio Essentials

833-S East 134th Street :-: :-: :-: New York City

BALKITE PRODUCTS CO.

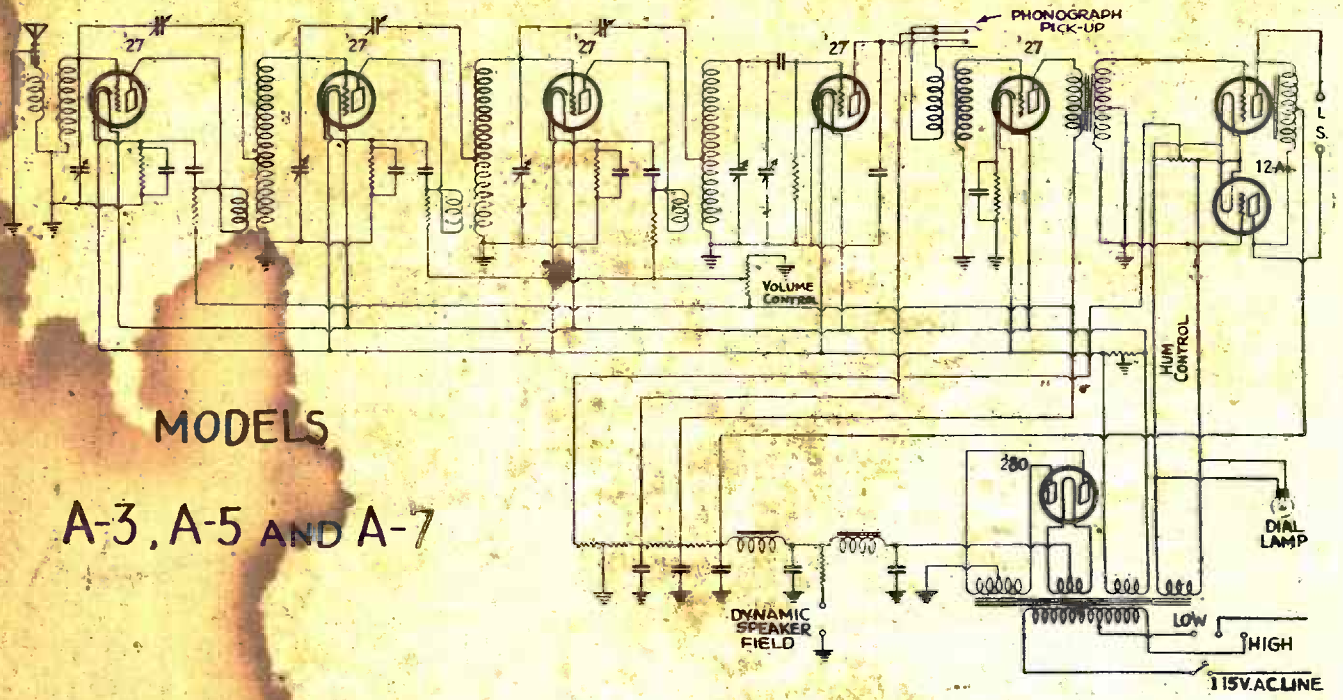

MODELS A-3, A-5 AND A-7

PIERCE AIRO INC.

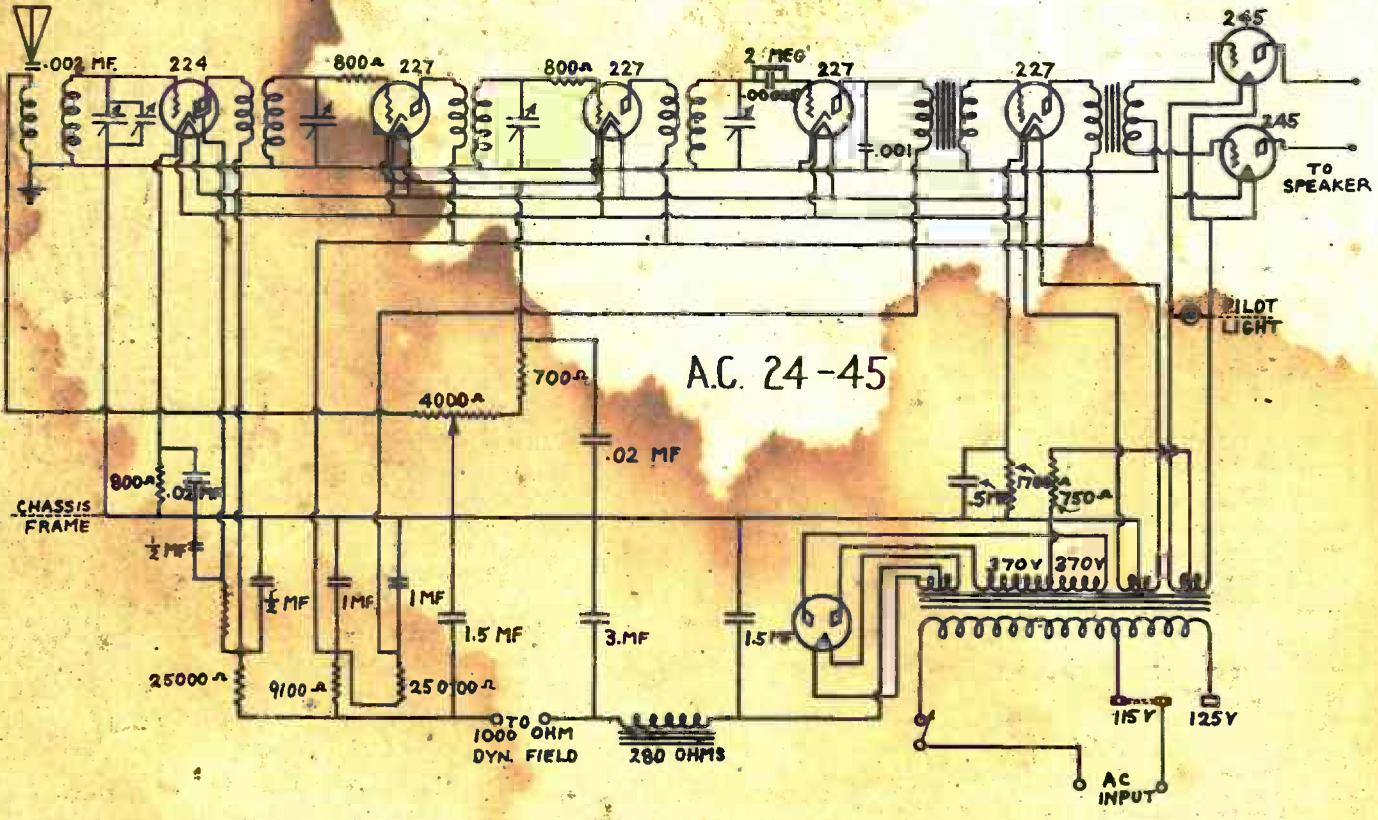

A.C. 24-45

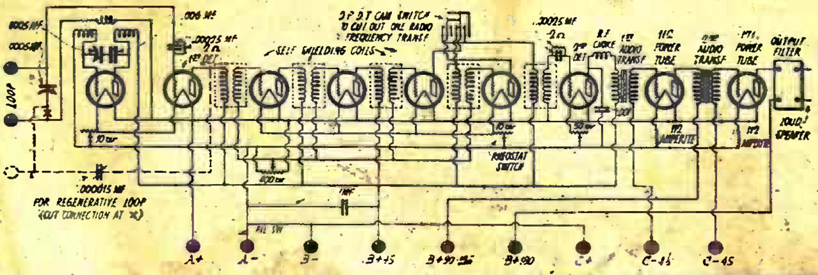

MAGNAFORMER

9-8 SUPER-HETERODYNE