ELECTRONIC TECHNOLOGY SERIES

# VACUUM TUBE CHARACTERISTICS

a RIDER publication

$1.80

# VACUUM TUBE CHARACTERISTICS

Edited by
Alexander Schure, Ph.D., Ed.D.

JOHN F. RIDER PUBLISHER, INC.
116 West 14th Street • New York 11, N. Y.

JOHN F. RIDER PUBLISHER, INC.

*Library of Congress Catalog Card No. 58-14217*

**Printed in the United States of America**

# PREFACE

One of the great miracles of the Twentieth Century has been the invention and development of the electron tube. This device, which is able to control virtually instantaneously the movement of millions of electrons, has been adapted into numerous fields of design and application. In spite of the growing competition from the transistor, the electron tube will continue to play a major role in the electronic industry.

Technicians, engineers, experimenters, amateurs, and others interested in electronic technology require an understanding of vacuum tube characteristics in order to work effectively with electron tubes and circuits. The material presented here has been selected and prepared accordingly. Topics are put forth in terms of theory, then they are related to such practical situations as might be involved in typical fundamental design computations. Drills in specific problems offer both additional information and practice in applying the principles just learned.

A perusal of the Table of Contents will indicate the all-inclusive coverage in this volume. It affords the student or interested reader a comprehensive and thorough understanding of vacuum tube characteristics.

Grateful acknowledgement is made to the staff of the New York Institute of Technology for its assistance in the preparation of the manuscript of this book.

*December, 1958*
*New York, N. Y.*

A.S.

# CONTENTS

## *Chapter 1*

# ELECTRONS AND ELECTRON EMISSION

### 1. Introduction

The history of the vacuum tube is the history of much of the field of electronics. The importance that electronics has assumed in industry, communications, medicine, defense, and scientific research is at least partly due to improvements in the design and construction of vacuum tubes; the two have matured together. Despite the fact that transistors have begun to displace vacuum tubes in certain applications, a thorough understanding of the latter is indispensable to anyone who wishes to do serious work in electronics.

A *vacuum tube* contains two or more metallic elements enclosed in an evacuated envelope of glass, metal or ceramic material. (One of the metallic elements serves as a source of free electrons.) The more inclusive term, *electron tube,* describes any vacuum or gas-filled device in which electrons move through space between electrodes. Thus, thyratrons, glow-tubes, ignitrons, mercury-vapor rectifiers,* and other similar industrial types are electron tubes –

---

* See A. Schure (ed.), *Gas Tubes* (New York: John F. Rider Publisher, Inc., 1958).

but they are not included in the category of vacuum tubes, so will not be discussed here.

A theoretical analysis or discussion of principles is more profitable if basic terminology is clearly defined. We shall now review certain fundamental physical concepts and terms, thereby avoiding misunderstandings in later discussions.

## 2. Electrons and the Electric Field

An electron is the smallest of all known subatomic particles. It has a mass of $9.03 \times 10^{-28}$ grams (about 1/1840 of the mass of a proton) and a negative electric charge of $16 \times 10^{-20}$ coulombs. The motion of electrons is controlled by the same laws as is the motion of larger bodies for which precise observation is possible. Direct experimental evidence obtained from such masses shows that their dynamics may be analyzed in terms of Newton's second law of motion which may be stated:

$$F = ma \tag{1}$$

or

$$Ft = mv \tag{2}$$

in which F is the force in dynes acting on the body, m is its mass in grams, and a is the acceleration imparted to it by the force measured in cm/sec$^2$.* Equation 2 expresses the same law in terms of *impulse* and *momentum.* Impulse is the product of the force F and the time t (measured in seconds); momentum is the product of the mass m and the velocity it takes on, measured in cm/sec. Since we shall be concerned with electron motion, a clear understanding of the conditions imposed by Newton's second law will be helpful.

In any space where electric forces act to produce acceleration of charges, an *electric field* is said to exist. Such a field is visualized as consisting of *lines of force,* each line representing the path that a free positive charge would take if it were placed in the field. Hence, each line has a definite shape and direction, *i.e.* the direction in which the positive charge would move if it were free to move at all. The movement of electrons in vacuum tubes is primarily determined by the character of the electric field which permeats the

---

* cm/sec$^2$ is sometimes written cm/sec/sec and is read as "centimeters per second per second."

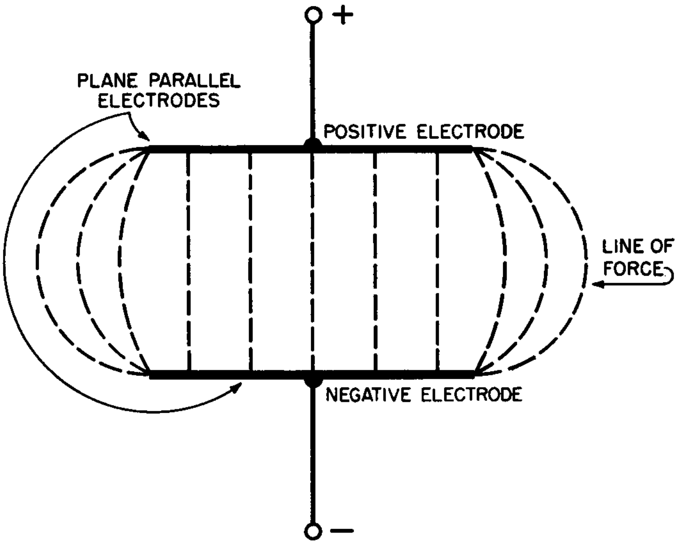

Fig. 1. The electric field created by the lines of force between two closely spaced plane-parallel electrodes.

space between electrodes at different potentials. In Fig. 1, which illustrates the electric field of which we speak, the lines of force are straight over most of the volume. Curvature occurs only near the edges of the electrodes.

## 3. Electron Affinity

An isolated electron in neutral free space will hang motionless until brought into the influence of an external electric field. If two plane-parallel electrodes like those of Fig. 1 are set up with one volt of potential between them, and if the isolated electron with no initial velocity is placed at the negative plate, then the electron will begin to move toward the positive electrode with uniform acceleration in accordance with Equation 1. The electron, having begun the trip with no kinetic energy whatsoever, will arrive at the positive electrode with a final velocity v as determined by the conditions set forth in Equation 2. The kinetic energy of the electron may be calculated from:

$$E = \frac{1}{2}mv^2 \qquad (3)$$

where E is the energy in ergs, m is the mass of the electron in grams, and v is the velocity mentioned above in cm/sec.

Due to the tiny mass of the electron, the energy E in ergs is extremely small, so in such cases it is customary to express E in *electron-volts.* Hence, an electron-volt is the energy acquired by an electron as a result of its being accelerated in free space by a difference in potential of 1 volt. One electron-volt is the equivalent of $1.6 \times 10^{-12}$ ergs.

The outer orbital electrons of the atoms of metals are not firmly bound to their nuclei and can pass from atom to atom like the bucket in a bucket brigade. It is this property which accounts for the conductivity of metals. The loosely bound electrons are sometimes likened to the molecules of a heated liquid since they are in constant, random motion and often leap from the surface in an attempt to escape from the metal. When they do so, however, electrostatic induction causes them to leave behind a small positively charged area on the surface; the attractive force between the negative electron and the induced positive spot generally returns the electron to the surface from which it came. To overcome this so-called *image force,* some energy must be added to the electron while it is still within the metal – energy that it will lose upon emerging from the surface. The kinetic energy an electron loses in this way – known as the *electron affinity* of the material – differs for different metals. Electron affinity, symbolized by w, is measured in electron volts.

### TABLE I

### ELECTRON AFFINITY OF TYPICAL METALS

| Material | Electron Affinity (ev) |
|---|---|
| Tungsten | 4.52 |
| Carbon | 4.5 |
| Copper | 4.0 |
| Thorium | 3.0 |
| Nickel | 4.0 |
| Thoriated tungsten | 2.63 |
| Oxides on nickel | 0.5 to 2.0 |

A vacuum tube requires electrons in the free space between its electrodes. Regardless of the method used to force these electrons out of their original abode, electron affinity must be overcome. Table I indicates that some materials serve as better sources of free electrons than others, as far as energy requirements are concerned.

## 4. Methods of Obtaining Free Electrons from Solid Conductors

There are five principal methods of giving an electron the energy it needs to break the affinity bond:

*1. Radioactive Disintegration* — Some metals, notably uranium, thorium, and radium, undergo atomic disintegration spontaneously with the emission of electrons, alpha particles (doubly ionized helium atoms), and gamma radiation (very high frequency waves).

*2. Field Emission* — By applying an intense electric field at the surface of a metal with a low electron affinity, it is possible to force electrons from the surface into free space. This method is often used in certain types of gas rectifiers, but virtually never used in standard vacuum tubes of the receiving or transmitting type.

*3. Photoelectric Emission** — Light quanta (photons) can add sufficient energy to the electrons in certain metals like selenium and silicon, and to certain compounds like cadmium sulfide, to overcome the electron affinity of these materials so that electron emission is obtained. Again, this process is never intentionally employed in conventional vacuum tubes.

*4. Secondary Emission* — The electrons in almost any metal may be liberated if the surface of the material is bombarded by high-energy electrons from some other source. Secondary emission is an important phenomenon in special tubes such as the image orthicon used in television cameras and the photomultiplier tube so essential to astronomy. This effect is also present in ordinary vacuum tubes, but has proved too much of a nuisance to be of merit in the design of high-gain amplifiers, oscillators, and converters.

*5. Thermionic Emission* — Escape energy may be added to metallic electrons by elevating the temperature of low-affinity materials. This is the method utilized in all common vacuum tubes to obtain a large supply of free electrons within the tube envelope. The choice of an emitting material is largely determined by the temperature

---

* The emission of electrons resulting from light falling on sensitive materials is, of course, utilized in many types of phototubes.

required to overcome its electron affinity. Other factors which influence the selection of thermionic material do, however, enter into consideration, particularly in vacuum tubes employing high field intensities. These will be discussed later.

## 5. Contact Potential

Because the electron affinities of various metals differ from each other, a small difference of potential appears between two different metals when they are placed in contact with each other. Even when the two materials are not in direct contact, but are connected by means of a third metal in the form of a wire, a similar difference of potential still exists, often in the order of 3 or 4 volts. Tube manufacturers make use of a variety of metallic components in the assembly of the finished product so that most vacuum tubes exhibit *contact potentials* which have to be reckoned with, particularly when the applied voltages are small (as in diode detectors) or when a precise analysis of behavior is to be made.

True contact potential is the voltage developed between dissimilar conductors as just described. In the industry, however, the term is used loosely to refer to the voltage which appears between tube elements when a relatively high resistance is connected between them. Actually this potential is the net voltage resulting from the various small currents that flow through this resistor, of which contact potential is only one component. Some others are due to initial electron velocity, gas current, grid emission and leakage. This voltage appears across the high impedance and thus retards the flow of current from increasing beyond a certain value. A better term than contact potential for this effect would be *retarding voltage.*

## 6. Thermionic Emitters

Of the element metals, tungsten has been used most successfully as an electron emitter. Although its high electron affinity constitutes a definite disadvantage – it requires higher temperatures than many other metals for electron emission – tungsten may still be found in high-voltage transmitting tubes because it does not vaporize easily and has a long life. Metallic tantalum has also had some application but is considered inferior to tungsten because of its lower vaporization temperature and because of its unfavorable reaction to the residual gases present in all vacuum tubes.

Table I shows thorium has a lower electron affinity than does tungsten – 3 ev as compared with 4.52 ev. On the other hand, if thorium is combined with tungsten as a filament material, the electron affinity turns out to be lower than that of either of the pure metals. In manufacture, small amounts of thorium oxide are added to the tungsten; when the mixture is heated some of the oxide is converted to the pure metal and appears on the surface as a monatomic layer. This layer of single thorium atoms reduces the electron affinity of the tungsten to a remarkable degree, as is evident from the figures in Table I – from 4.52 down to 2.63. Most transmitting tubes use thoriated tungsten filaments for operation at anode voltages under 3000 volts. In such applications, virtually all of the residual gas must be removed if long life is to be anticipated because such gas quickly renders the filament ineffective as an emitter either by oxidizing the thorium layer or by flaking it off the surface by ionic bombardment.

Modern low-voltage vacuum tubes have either an oxide-coated filament or cathodes as emitters. Usually, a pure nickel base containing a small quantity of silicon is coated with barium and strontium carbonates suspended in water, varnish, or collodion. After the filament or cathode is mounted in the tube, together with the remainder of the electrodes, the air is removed and the emitter is heated electrically to about 1500° Kelvin. At this temperature, the carbonates are reduced to oxides of barium and strontium and the waste product (carbon dioxide) is carried out by vacuum pumps.

After the tube has been evacuted, it is operated with a specific applied voltage between electrodes (the exact voltage depends upon the tube type) for a carefully controlled period of time. During this phase of the conditioning, the silicon in the cathode base metal combines with the barium and strontium oxides to produce a surface layer of pure metal. This surface layer supplies the free electrons required for emission.

The low electron affinity of the coating permits low temperature of the tube heater with a consequent increase in emission efficiency. Figure 2 compares the three common types of filaments with respect to emission current *vs* absolute temperature. Oxide-coated emitters, like thoriated tungsten, are subject to damage by positive ion bombardment due to the presence of residual gas. A second source of

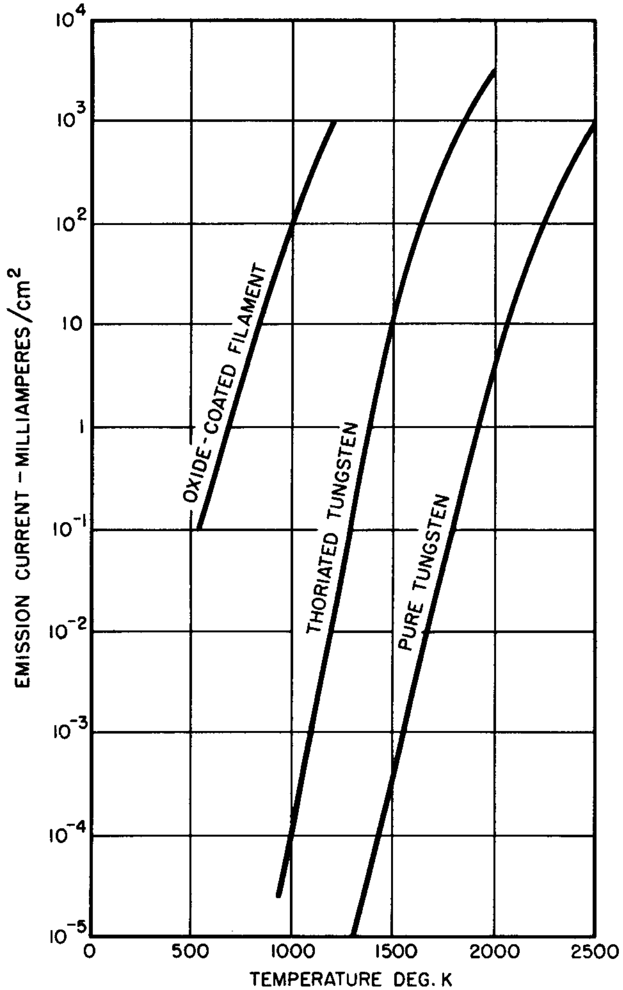

**Fig. 2.** Curves of emission current per $cm^2$ of emitting surface vs absolute temperature of emitter.

possible damage is the so-called *hot spot* which may form on the emitter due to nonuniformities in the surface. This trouble is usually avoided by employing oxide-coated emitters only in tubes in which low-anode voltages are applied.

Oxide-coat emission is common in both *directly heated* and *indirectly heated* vacuum tubes of the conventional variety (Fig. 3).

Early types used only directly heated filaments, but this system proved objectionable when alternating current became common as a source of filament power. Stray alternating electrostatic fields and the alternating voltage across the filament give rise to an a-c component in the plate current which is heard as line-frequency hum in the audio reproducer, particularly in amplifiers containing two or more stages. Indirectly heated emitting cathodes overcome this difficulty because they have unipotential surfaces from the source of a-c filament or heater power. In addition, sleeve-cathode tubes of various types may be heated from a single source such as the low-voltage secondary winding of a power transformer. Even in small tubes, the mass of the cathode is large enough so that appreciable thermal inertia is present; thus, the cathode temperature does not swing up and down with the phase of the heating cycle.

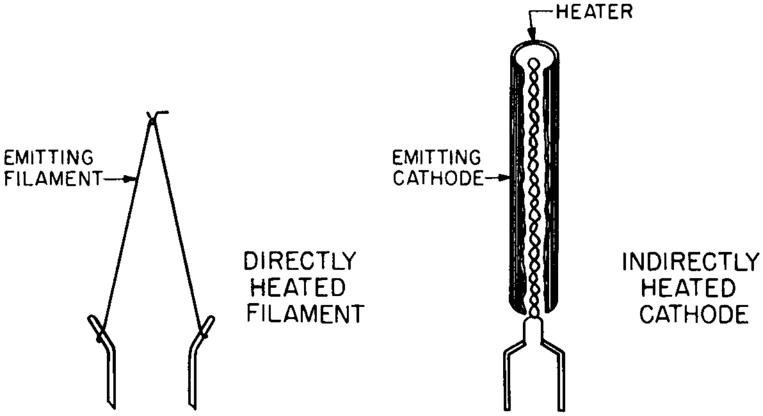

**Fig. 3. Constructional difference between a directly heated and a sleeve-cathode emitter.**

## 7. Space Charge

An electric field, as described briefly in Section 2, consists of lines of electric force between two electrodes at different potentials. Each line of force is said to "start" at a positive charge and end at a negative charge; this, of course, follows from the arbitrary choice of direction previously stated — *i.e.*, the path that a free positive charge would follow if it were free to move in the field. In a thermionic diode (a tube containing an emitting cathode and a second electrode whose potential is positive with respect to the cathode) electrons emitted from the cathode surface immediately begin to move toward the positive anode or plate. The moment they are in flight in the space between electrodes, however, they alter the character of the electric field. Before emission, each line of force terminates at a point on the surface of the cathode since this unipotential surface is uniformly negative with respect to the anode. After emission begins, however, the lines of force from the anode can terminate on free electrons in flight in the interelectrode space, since these negative bits are now closer to the anode. This makes the field strength at the cathode virtually zero because the lines can no longer reach it with the same abundance. The distortion of the field results in the formation of a *cloud* of electrons between the anode and cathode thus producing a region of high-density negative charge. The net effect of this *space charge* is to limit the flow of *anode current* for a given value of cathode-to-anode potential so that the influence of space charge on the operation of any vacuum tube is an important one. We shall make frequent reference to space charge in discussing tube constants and characteristics.

## Review Questions

1. Show that the two equations for Newton's second law of motion (Equations 1 and 2) are identical.
2. Describe the structure of an electrical field between two parallel, closely-spaced metal plates. How is the direction of such a field determined?
3. The Brookhaven Cosmotron is reputed to be capable of accelerating alpha particles and deuterons to energies upwards of one billion electron volts. How much energy in *ergs* does this represent?
4. Explain the relationship between electron affinity and the application of certain elements in preference to others as emitters in vacuum tubes.
5. Of the various methods of obtaining free electrons from solids, the one favored for receiving and transmitting vacuum tubes is thermionic emission. Explain why this method is favored over all the others.
6. Explain clearly why tubes in which thoriated tungsten filaments are used at high voltages must be thoroughly evacuated.
7. Why is the indirectly heated type of vacuum tube more suitable for use in amplifier circuits operated from a-c power lines.
8. Describe the formation and structure of indirectly heated, oxide-coated cathodes in modern receiving tubes.

9. Why does the existence of a space charge in a vacuum tube make the field strength around the cathode virtually zero?
10. Define thermal inertia. What part does thermal inertia play in tubes used in amplifier circuits?

## *Chapter 2*

# DIODE CHARACTERISTICS AND RATINGS

### 8. Temperature and Space-Charge Saturation

A heated emitter in a vacuum operating at a specific temperature supplies the surrounding space with a finite quantity of electrons per unit time. The actual number is a function of the electron affinity of the material and its temperature. Assuming that we confine the discussion to a single material, say oxide coating, then the number of free electrons available per unit time is determined solely by the temperature of the emitter.

When the emitter is the cathode of a diode, the space current or *anode current* is likewise dependent upon the emitter temperature to a predicatable degree. Since current is to be considered as the number of electrons moving through the ammeter per unit time, the maximum current in the plate circuit of the diode at any given cathode temperature, regardless of the difference of potential between the two electrodes (plate voltage), would seem to be the current that flows when *all the electrons being emitted are moving to the plate.* Theoretically, all electrons which manage to escape from the cathode will ultimately migrate to the anode and, once the first group has made the passage, the same number will continue to arrive at the anode per unit time regardless of the intensity of the electric field established by the difference in electrode potential.

This conclusion may be tested by setting up the diode in a circuit like that of Fig. 4. Starting with $E_p$ quite large – about 50 volts – and reducing it smoothly by potentiometer R, the current at first remains substantially constant as predicted. But when $E_p$ has diminished to a few volts, the plate current $I_p$ begins to drop sharply as the voltage is further reduced. If the experiment is repeated wth the cathode at a higher initial temperature, the current will start out at a larger figure but will follow essentially the same pattern as before. These results are illustrated in Fig. 4B. The considerations previously outlined seem to predict current-voltage curves like AA′ and BB′, whereas the results actually obtained give APO and BQO. With the plate voltage at some low value like S volts, the same current flows regardless of the cathode temperature; at high plate voltages only the temperature seems to exert control over the plate current.

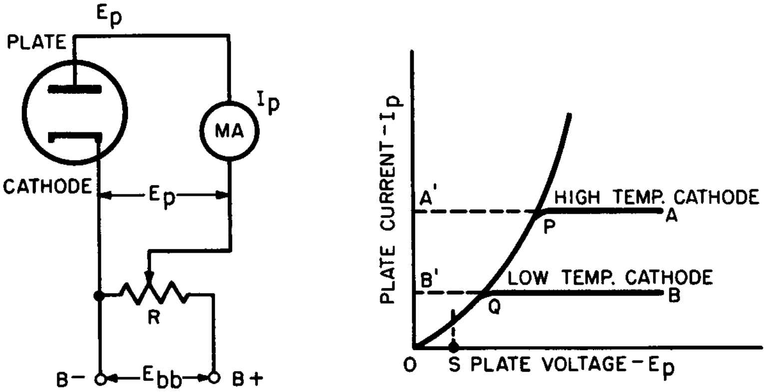

(A) (B)

Fig. 4. A diode circuit (A) whose use achieves current-voltage curves (B) for a pure tungsten-filament tube.

The answer to this unexpected result is the action called *space charge.* With plentiful cathode emission at high plate voltages, the anode field is capable of taking electrons from the space-charge cloud as fast as the cathode can supply them, hence the current remains constant over a comparatively wide voltage range (AP and BQ). As the plate voltage diminishes, the field becomes less intense and fewer electrons are drawn to the plate. This, in turn, means that fewer electrons reach the other side of the space-charge cloud from the cathode so that a condition of equilibrium exists at lower values of plate current (PO and QO).

A tube which operates so that all the electrons emitted by the cathode are drawn to the plate is said to be *temperature saturated.* This term indicates that the plate current can be increased only by raising the cathode temperature. In the other condition, the vacuum tube's cathode emits more electrons than can reach the plate (per unit time) as a result of the presence of the space-charge cloud. This state of affairs is known as *space-charge saturation.*

## 9. Diode Variations

The abrupt transition from the space-charge saturation condition to the temperature-saturation condition shown in Fig. 4B is somewhat idealized, even for a pure metal emitter. In the case of thoriated tungsten and oxide-coated cathodes, the transition from one state of operation to the other occurs much more gradually. The reasons for these differences lie in several contributing factors which complicate the simple picture we have drawn up so far.

For instance, the drop in potential along a directly heated filament causes different portions of the heated wire to be at different values of space-charge saturation, a factor which distorts the electric field severely. Again, hot spots sometimes develop on oxide-coated cathodes with a consequent increase in emission from that area, changing the behavior of the tube very markedly. The filament of a directly heated tube seldom is at the same temperature over its entire length, an effect which results in temperature-saturated currents of different values. When a filament is V-shaped (as in the 5U4 tube) there may even be space currents between two parts of the filament itself. Thus, the behavior of one diode type in a specific circuit is very different from another diode having dissimilar constructional features. As a matter of fact, diodes of the same type number often display wide variations in their characteristics. Especially in the case of oxide-coated cathodes, the behavior pattern of a given diode often depends to a great degree upon its previous application and treatment.

## 10. Child-Langmuir Law

We can concretely summarize much of the previous matter thusly: the plate current in a specific diode under constant cathode-temperature conditions depends only upon the plate voltage, provided that this current is less than the temperature-saturation value. This statement stems from a mathematical law first published by C. D. Child and later examined quantitatively by I. Langmuir. Their equation reads:

$$I_p = 2.34 \times 10^{-6} \times \frac{E_p^{3/2}}{d^2} \text{ amperes per cm}^2 \qquad (4)$$

in which $I_p$ is plate current less than temperature-saturation value, $E_p$ is plate potential, and d is the distance between the emitter and anode. The law is precise for two parallel plane electrodes and approximately correct for other configurations. Its importance lies in the fact that it relates the plate current of a diode only to the plate voltage and the geometry of the elements. Since virtually all practical anode circuits operate under space-charge saturation conditions, the Child-Langmuir law may be used to predict the tube's behavior in advance of its design.

## 11. Diode Characteristics and Ratings

Besides the voltage specified by the diode manufacturer for application to the filament or cathode heater to attain the design-operating temperature of the emitter, several other ratings are necessary. All of these relate to the maximum permissible plate current and the maximum potential that may be supplied across the cathode-plate circuit.

*Cathode efficiency* is defined as the ratio of the emission current in milliamperes to the power consumed in heating the cathode. From previous discussions it is clear that oxide-coated emitters have the highest efficiency, pure metal emitters have the lowest, while thoriated tungsten falls somewhere in between. Table II gives actual figures for the relative efficiencies, with the cathodes running at 40%

of their full rated filament power and with an anode voltage of 250 volts.

### TABLE II

### RELATIVE EFFICIENCY OF EMITTERS

| | |
|---|---|
| Pure Tungsten | 0.8 ma per watt |
| Thoriated Tungsten | 6.7 ma per watt |
| Oxide-coated | 16.0 ma per watt |

*Glass temperature* is defined as the maximum temperature to which the glass envelope may rise without releasing adsorbed gases. This temperature is about 400°C for soft glass and 600°C for pyrex.* To avoid the release of gases, glass is seldom used as the tube envelope when the continuous power dissipation is to be greater than 1 kilowatt.

*Maximum anode temperature* is one of the most important of the diode ratings. Although metallic anodes are not likely to fracture or melt even when overheated in a vacuum tube, they release adsorbed gases and soften the vacuum, thereby opening the way for ionic bombardment of the cathode. The rise of temperature of a diode plate is due directly to the kinetic energy of impact between the electrons and the metal surface. From Equation 3,

$$E = \tfrac{1}{2}mv^2$$

for a single electron. Since n electrons arrive per unit time, then

$$W = \tfrac{1}{2}nmv^2 \qquad (5)$$

If, in Equation 5, n is the number of electrons per second, m is electron mass in kilograms, and v is electron velocity in meters per second, then W is given in watts. Since electrical power in watts may also be computed from the product of potential difference and current, then:

$$\tfrac{1}{2}nmv^2 = i_p e_p \qquad (6)$$

The temperature of the anode tends to rise until the energy supplied to it from all sources is exactly counterbalanced by the energy it

---

* The terms "soft" and "hard," as applied to vacuums, define the degree of gas exhaustion. These are qualitative adjectives and are seldom rigorous descriptions. In general, a low-quality vacuum of about 1 mm or more of mercury would be called "soft;" when the pressure drops to 0.0001 mm or less, the vacuum would be called "hard."

can dissipate by radiation. Cooler operation is therefore realized by making the anode surface as large as possible commensurate with the electrical specifications, encouraging radiation by fin structures, blackening and roughening the anode surface and auxiliary fins, and by forced cooling of this plate by circulating air, water, or oil. In receiving tubes, anodes are generally made of nickel-iron alloys; tantalum, molybdenum, and graphite are best for transmitting types.

*Peak inverse voltage* rating applies to alternating voltages which appear at the terminals of a diode when it is used as a rectifier. During the half-cycle of ac when conduction through the rectifier does not occur, the tube behaves as an open circuit and the peak applied voltage is impressed across it. This is the instant when arc-over is most likely to take place. Large inverse peak voltage ratings are obtained by wide spacing of electrodes and leads as well as by thorough evacuating of the tube envelopes. For example, the peak inverse voltage rating of a common receiving-type rectifier (5Y3-GT) is 1400 volts; a large rectifier such as a GL-5625/KC-4 is rated at 150,000 volts.

*Other diode ratings* – The curves in Fig. 5 and Fig. 6 give important information concerning the operation of a diode as a rectifier

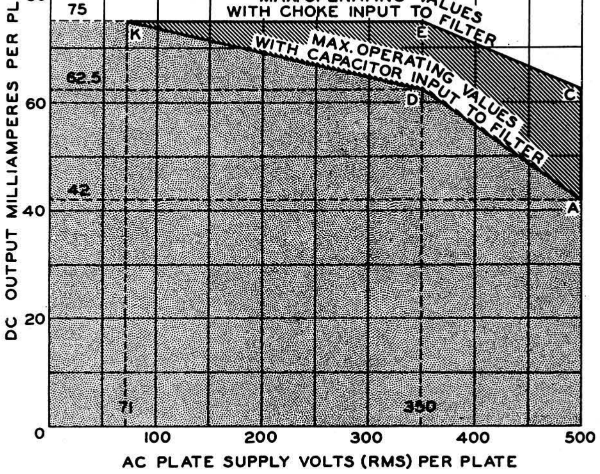

**Fig. 5. Operating ratings of the 5Y3. RCA**

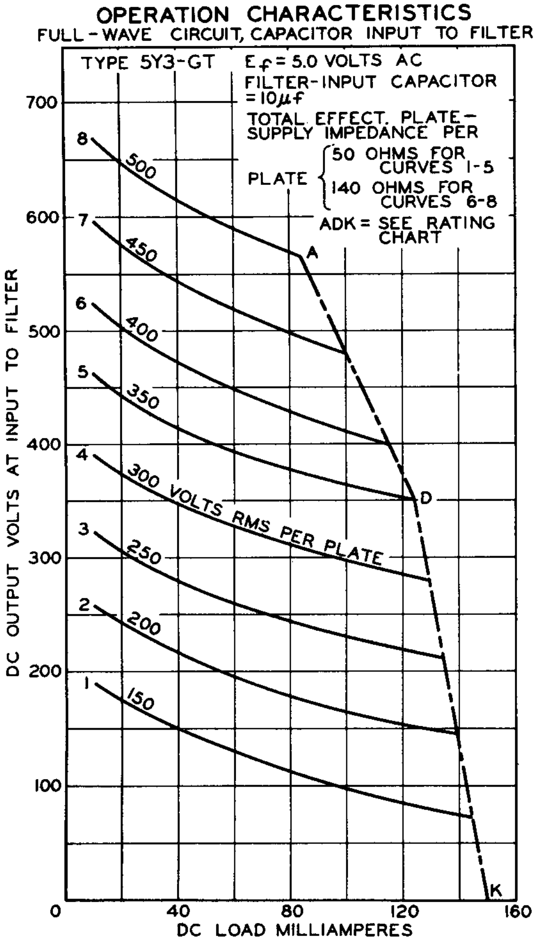

**Fig. 6A. Capacitor-input characteristics of the 5Y3. RCA.**

in a power supply. The *rating chart* (Fig. 5) is a graphical representation of maximum a-c voltage input *vs* maximum d-c current output for both capacitor-input and choke-input filter systems. By presenting the relationships in this graphical form, the user can become acquainted with the possible ranges of operating conditions for specific tubes. The rating chart shown in Fig. 5 applies to the 5Y3-GT double-diode rectifier. To understand its use, consider first the information it contains for a capacitor-input filter.

For all values of a-c plate-supply voltage (per plate) less than 71 volts, it is permissible to draw from the tube 75 ma of d-c output

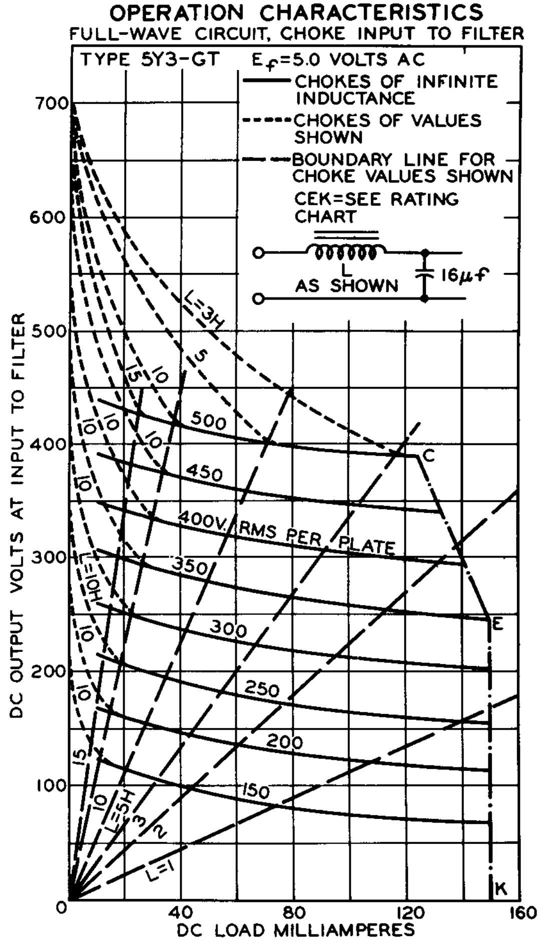

Fig. 6B. Choke-input characteristics of the 5Y3. RCA.

current (per plate). At 71 volts and above, starting at point K on the rating chart, the permissible output current drops in a linear fashion until it reaches point D, or 350 volts; at this supply voltage, the maximum drain allowed is only 62.5 ma per plate. Between points D and A, the slope of the curve sharpens abruptly until it reaches point A where the largest current permitted is 42 ma. For the choke-input connection, the maximum current remains at 75 ma for substantially larger values of plate-supply voltage, beginning to drop at point E (350 volts) and reaching a limit of 62.5 ma at 500 volts of anode supply.

The operation-characteristics chart for capacitor-input to filter (Fig. 6A) shows maximum current and voltage relationships given in the rating chart of Fig. 5. The boundary line A-D-K in Fig. 6A refers to the line of the same designation in Fig. 5.

The operation-characteristics chart for a choke-input to filter (Fig. 6B) shows two distinct things: (1) limiting current-voltage relationships as in the previous case and (2) the effect of various chokes on the regulation of the power-supply voltage. The solid lines indicate what the d-c output voltages would be if the chokes were "ideal" (*i.e.,* of infinite inductance). The long-dash lines are boundaries for the various values of inductance as indicated. The short-dash curves show the degree of departure from the solid-line curves for each choke inductance.

## Review Questions

1. Why does cathode temperature have the greatest control over tube plate current at high plate voltage? What tube effect governs plate current at low plate voltages?
2. Distinguish between space-charge saturation and temperature saturation.
3. Give a qualitative explanation of the significance of the Child-Langmuir Law and its equation (4).
4. Explain exactly what is meant by the statement, "the cathode efficiency of thoriated tungsten is 6.7 ma per watt."
5. Prove that Equation 5 will yield the result in watts if n is the number of electrons per second, m is the mass of an electron in kilograms, and v is the electron velocity in meters per second.
6. Why is internal tube arcing more likely to occur when the applied voltage is in the inverse direction (nonconducting) between cathode and plate?
7. Explain briefly why a "soft" vacuum in the envelope of a vacuum tube may shorten tube life.
8. The peak inverse plate-voltage rating of a 5U4 rectifier is 1550 volts; that of a 5Y3 is 1440 volts. What must be the difference in structure between these tubes to account for the difference in peak inverse rating?
9. State the uses of diodes in modern electronics.
10. Draw either a block diagram or a simple schematic diagram illustrating each of the applications mentioned in Question 9.

## *Chapter 3*

# TRIODE CHARACTERISTICS

### 12. Effect of the Grid on the Electric Field

The insertion of a third electrode between the cathode and anode alters the electric field in the tube substantially, even if the third electrode is at zero potential with respect to the cathode. As the potential on the grid is varied, the field distribution changes accordingly. Figure 7 shows a field distribution between a pair of plane-parallel electrodes, one emitting freely, the other serving as an anode. The anode potential is a positive fixed value with respect to the cathode, while the grid potential is varied. The arrows on the field lines show the direction in which an electron would move along the line.

The grid structure consists of a spirally wound wire between the cathode and plate, connection being made to it through a base prong or a connector at the top or side of the envelope. As Fig. 7 indicates, all electrode potentials are measured with reference to the cathode, the voltage of which is denoted as zero. Figure 7A shows conditions which prevail when the grid is very negative with respect to the cathode. (Arrow directions are those in which an electron would move if it were free to do so. In this respect the field direction is opposite to the conventional one which shows the force applied to a positive charge.) All lines of force terminate on the grid so that electrons near the cathode return to the cathode. Since there are no electrons in the grid-plate space and no force lines directly between the grid and the cathode, there would be zero plate current. This condition is known as *plate-current cutoff* or simply *cutoff*. The grid has been made somewhat less negative in Fig. 7B, although the cathode is still more positive than the grid. The grid field, however, has lost some of its intensity and some force lines now connect the cathode directly to the plate. Plate current now flows, but its magnitude is limited by the grid potential. In Fig. 7C, the grid and cathode potentials are the same, a condition which results in increased plate-current flow.

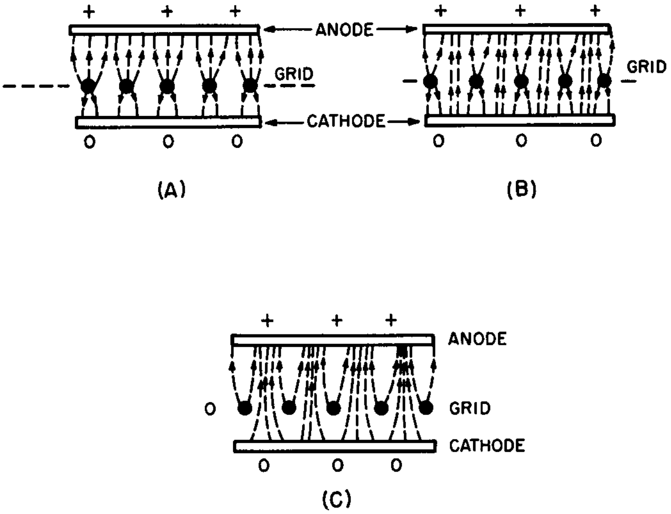

Fig. 7. Field distribution between plane-parallel electrodes.

These field drawings demonstrate that the field intensity at the cathode is a function of *both the grid and plate potentials.* Because of the screening action of the grid wires, it is reasonable to assume, as a first guess, that the grid voltage exercises more control over the plate current than does the plate voltage. With both these ideas in mind, we can first express the relationship between plate current ($i_p$), plate voltage ($e_p$) and grid voltage ($e_g$) in the form of a simple equation:

$$i_p = f(e_g \ e_p) \tag{7}$$

which says that plate current is a function of both grid and plate voltages. Since the grid voltage has a greater influence on the plate current than does the plate voltage, say $\mu$ times greater, we can go further and write:

$$i_p = F(e_p + \mu e_g) \tag{8}$$

Although we do not use Equation 8 in this form in calculations, it is useful in the sense that it shows that the plate current is a function of the plate voltage *plus $\mu$ times the grid voltage;* that is, $\mu e_g$ has the same effect on the plate current as a plate voltage equal in value to this product.

## 13. Characteristic Curves

Equation 7 contains three variables. A simple single-curve graph illustrates the relationship between two of these. There is one such curve for each value of the *third* variable, providing us with a group or *family of curves* which includes the relationship among all three of the variables. To illustrate: suppose that the plate voltage of a 6BN4 triode is held constant at 200 volts and the potential of the grid varied in unit steps from zero to −6 volts while plate-current readings are taken. This would provide a table of values as shown in Table III. If three values are now plotted with $e_g$ as the

### TABLE III

### TYPICAL $e_g$ - $i_p$ CHARACTERISTICS OF THE 6BN4

($e_p$ = 200 volts)

| $e_g$ (volts) | $i_p$ (ma) |
|---|---|
| 0 | 42 |
| −1 | 28 |
| −2 | 17 |
| −3 | 10 |
| −4 | 4.5 |
| −5 | 2.0 |

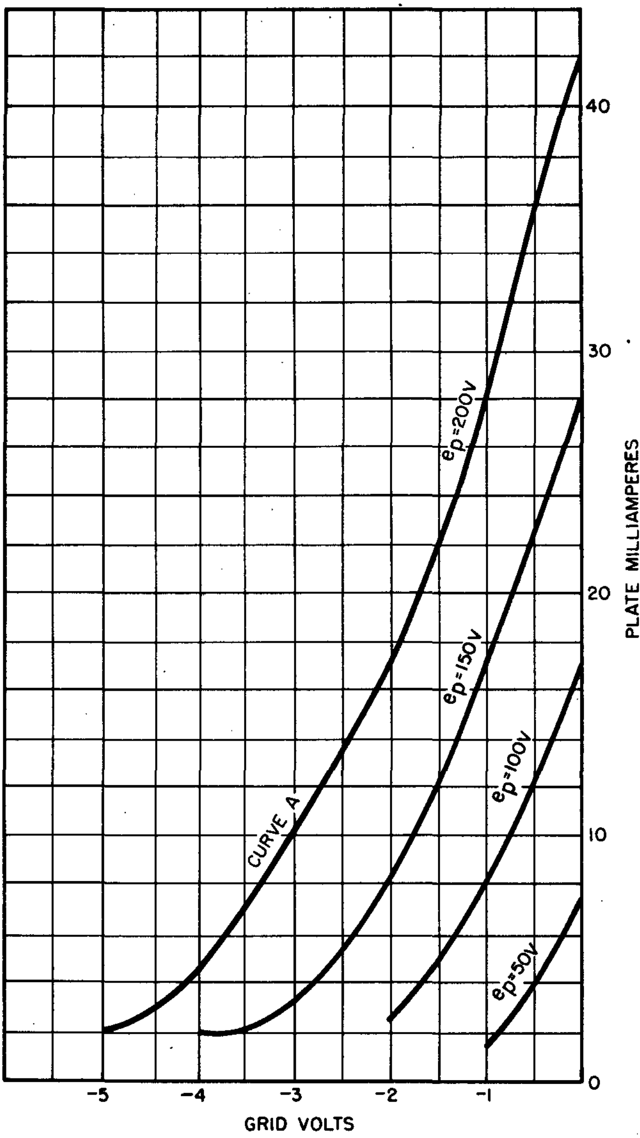

**Fig. 8.** 6BN4 triode grid — plate transfer characteristics. *CBS-Hytron*

independent variable (x axis) and $i_p$ as the dependent variable (y axis), a single curve is obtained (curve A in Fig. 8). When the process is repeated for plate voltages ranging from zero to 200 volts in 50-volt steps, the complete family of curves given in Fig. 8 is obtained. These curves are officially termed the *grid-plate transfer characteristic* curves since they represent the "transfer" control relationship from the grid potential to the plate current. The name is often shortened to either grid-plate curves or simply transfer curves.

The same information may be recorded in a somewhat different family of curves by making the plate voltage the independent variable and the plate current the dependent variable. In this case, the grid voltage is the "third dimension" of the graph, providing a series of separate curves for each new value of grid potential. Figure 9 illustrates a family of such curves for the same tube (6BN4), which is titled the *average plate characteristics.*

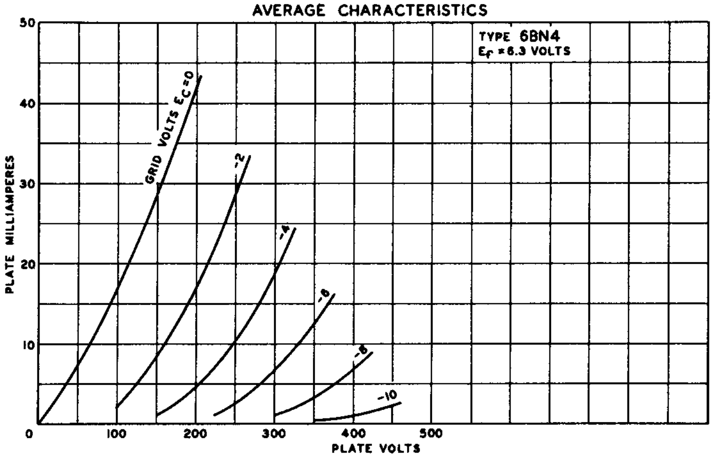

Fig. 9. Average plate-characteristic curves for a 6BN4 triode. RCA

Identical information is obtainable from either set of curves as the following example illustrates: Find the plate current that flows in a 6BN4 triode when the plate voltage is 150 volts and the grid voltage is $-1$ volt. Starting with the transfer family, first locate the curve labeled 150 volts and follow it down until it intersects the $-1$volt grid ordinate. We see that the plate current under these conditions is 17 ma. Using the plate characteristics, the $-1$-volt curve is traced until it intersects the 150-plate-volts ordinate; again, the plate current for these values is 17 ma.

The plate characteristic curves are used much more frequently than the transfer curves as will be shown later. The latter, however, are extremely useful for certain kinds of amplifier-design procedures. Both approaches will be applied in forthcoming discussions.

## 14. Amplification Factor

In Equation 8, Section 12, the factor $\mu$ was introduced as a quantity which expresses the relative *influence* of grid and plate potentials upon the magnitude of the plate current. Relative effects are generally set up as ratios in which the comparison of the two quantities is given as a simple number. From the 6BN4 plate characteristics, for example, it may be seen that the plate current drops from 17 ma to 4.5 ma when the grid voltage is changed from —2 volts to —4 volts while the plate voltage is maintained at a constant 200 volts (line AB in Fig. 10). The grid-voltage change of 2 volts, therefore, has produced a plate-current change of 12.5 ma. If the grid voltage is now held at —4 volts, the current may be brought right back to 17 ma merely by increasing the plate voltage to 286 volts (point C in Fig. 10). Hence, a plate-voltage change of 86 volts has counterbalanced a grid-voltage change of 2 volts by restoring the current to its initial value. If the ratio of these two voltage changes is made:

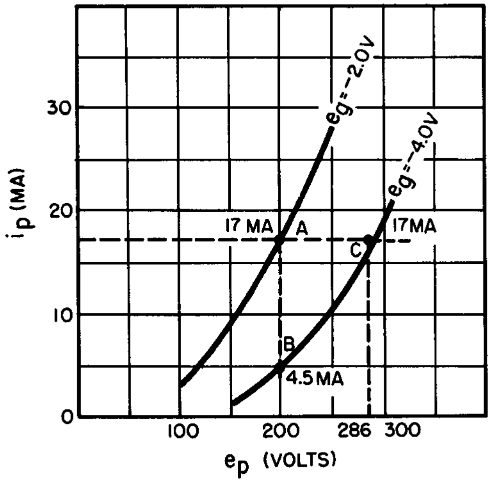

Fig. 10. Amplification factor obtained from plate characteristics.

$$\frac{\text{change in } e_p}{\text{change in } e_g} = \frac{86}{2} = 43$$

it is clear that *43* represents the number of times more effective the *grid* voltage is as compared with the *plate* voltage when one is altered to exactly neutralize a change in plate current caused by a change in the other. The ratio above is called the tube's *amplification factor;* it is symbolized by $\mu$ and is generally defined in this manner:

$$\mu = \frac{-de_p}{-de_g} \quad (i_p \text{ constant}) \qquad (9)$$

Here, $de_p$ represents the change in plate voltage, $de_g$ the *change* in grid voltage, and $i_p$ the plate current. (Some authors use the Greek delta, $\Delta$, rather than the English "d" to symbolize a change in a quantity. The meaning is the same. The symbol, $\delta$, the lower-case Greek delta, is also quite common in the literature. It is the standard expression used to show the relationship between two variables when a third variable is held constant.)

Several important considerations should be noted at this time: (1) Amplification factor, $\mu$, does not carry units since it is a ratio of two voltages. (2) $\mu$ is not absolutely constant throughout the range of operation of the tube; it changes slightly when the grid voltage span is altered. The variation is so small, however, that most engineers take $\mu$ as constant over the range of voltages normally used on common triodes. (3) In order for $\mu$ to be a positive number such as 43 (rather than −43 as in the case of the 6BN4) a negative sign must be inserted before the ratio, because a positive-going plate voltage will require a negative-going grid voltage to maintain $i_p$ constant.*

Amplification factors for conventional receiving triodes range from a $\mu$ of 20 for a tube like the 6J5 up to approximately 100 for the 6SF5. Certain triodes, expressly designed for special applications have amplification factors substantially lower than 20. For example, the 6AS7G has a $\mu$ of only 1.7. This tube is intended for use as a regulator in d-c power suppliers, as a booster tube in the scanning circuit of television receivers, and as a push-pull class-A output tube in high-fidelity audio amplifiers. In these applications, a high am-

---

* The minus sign is useful in the definition but may be omitted in calculations where it loses its significance. This condition arises in Section 16.

plification factor is not only unnecessary but often undesirable. As in the use of the plate-characteristic curves for determining amplification factors, the reader is strongly urged to verify the values of $\mu$ given for representative triodes whose curves are presented in easily available receiving-tube manuals.

There is a strong tendency even among technicians to view amplification factor and voltage amplification available from a triode circuit as similar, if not identical, quantities. Although the voltage gain (voltage amplification) of such a circuit is directly proportional to the $\mu$ of the tube, its actual value also depends on other tube constants to be discussed in the following pages.

## 15. Plate Resistance

The resistance of a linear circuit element is defined simply by Ohm's law as the ratio of the potential across the element to the current which flows in it. If a triode is assumed to be linear for the moment, its resistance might be obtained by choosing any one of the $e_g$ lines in Fig. 9 and determining from it the voltage and current. For instance, suppose the −4-volt $e_g$ line is selected. For this condition the current in the tube is approximately 10 ma when the plate voltage is 250 volts. This gives a resistance of 25,000 ohms. There is nothing magical about the −4-volt $e_g$, however, and there is no reason why this one should be selected in preference to any other. Thus, if the same operation is performed on the −2-volt $e_g$ line, a current of 10 ma flows when the plate voltage is only 165 volts, yielding a plate resistance of 16,500 ohms. So it is evident that plate resistance thus obtained is quite meaningless.

On the other hand, the *slopes* of the $e_p$–$i_p$ curves in Fig. 9 are quite similar from $e_g = 0$ to $e_g = -4$ volts, and since this is the normal operating range of this tube, the plate resistance may be taken as a *dynamic quantity* (in contrast to the *static* measurements in the previous paragraph) by determining the extent of plate current variation *over a very tiny increment or decrement of plate voltage,* while the grid voltage is held constant. Dynamic plate resistance is thus defined as:

$$r_p = \frac{de_p}{di_p} \qquad (e_g \text{ constant}) \qquad (10)$$

The meaning of $r_p$ may be stated in this manner: if a *large* change in plate voltage gives rise to a *small* change in plate current, then the plate resistance is high; similarly, a tube's dynamic resistance must be relatively low if the plate current varies considerably with normal plate-voltage changes.

Although the various curves of the 6BN4 family (Fig. 9) do not have excessive curvature, they are definitely not linear. If they were, the dynamic plate resistance of the tube could be obtained merely by determining $di_p$ for any $de_p$ on a given $e_g$ line. As an example, consider the result when this is done for the −2-volt $e_g$ line:

$$\text{when } e_p = 100 \text{ volts, } i_p = 2.5 \text{ ma}$$

$$= .0025 \text{ ampere}$$

$$\text{when } e_p = 250 \text{ volts, } i_p = 28.75 \text{ ma}$$

$$= .0288 \text{ ampere}$$

$$\text{when } e_p = 150 \text{ volts, } di_p = .0263 \text{ ampere}$$

$$\frac{de_p}{di_p} = \frac{150}{.0263} = 5700 \text{ ohms approx}$$

However, when the 6BN4 is operated at 150 volts for $e_p$, 10 ma for $i_p$, and a grid voltage ($e_g$) of −2 volts, the manufacturer's rating for its $r_p$ is 6300 ohms. The error obtained above is unquestionably due to the curvature of the characteristic

The most precise method for obtaining the value of $r_p$ is illustrated in Fig. 11. The operating point of the tube has been chosen to conform with that selected by the tube manufacturer; *i.e.*, $i_p = 10$ ma, $e_p = 150$ volts, and $e_g = -2$ volts. A tangent giving the *true slope of the curve at that point* is drawn in to intersect the x-axis, forming the right triangle ABC in which AC is the x-intercept, and CB the y-intercept. Hence, in this arrangement, $de_p$ = the x-intercept, $di_p$ = the y-intercept, and $r_p$ = x-intercept/y-intercept.

From the figure, we obtained:

$$r_p = \frac{300-100}{31.8}$$

$$= \frac{200}{.0318} = 6300 \text{ ohms approx}$$

which is in accordance with the receiving-tube manual value for $r_p$.

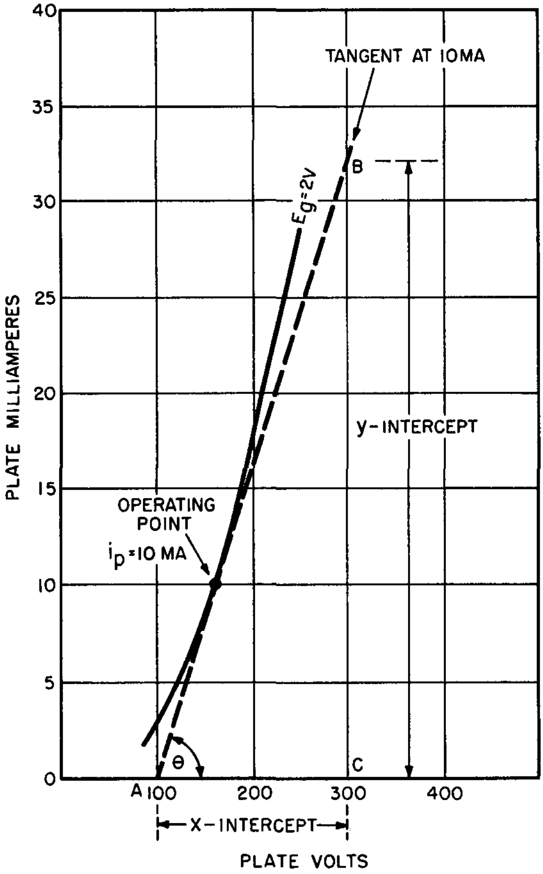

**Fig. 11.** The correct graphical method for computing $r_p$.

The slope of a line is analytically defined as the tangent of the angle made by the line to the x-axis. That is,

$$\text{slope AB} = \tan \Theta \tag{11}$$

Note, however, that tan Θ = y-intercept/x-intercept and that this is the *reciprocal* of the definition of $r_p$. This may be summarized in the following equation:

$$r_p = \frac{1}{\text{slope AB}} \tag{12}$$

We call your attention to the fact that equations involving pure trigonometric functions cannot be used for finding $r_p$ unless the same scales are used for both the X and Y axis. This is not true in Fig. 11; hence $r_p$ does *not* equal cot $\Theta$.

**Problem 1.** Verify the value for $r_p$ for the 6J5 triode given by the manufacturer as 7700 ohms, when $e_g = -8$ volts, and $e_p = 250$ volts.

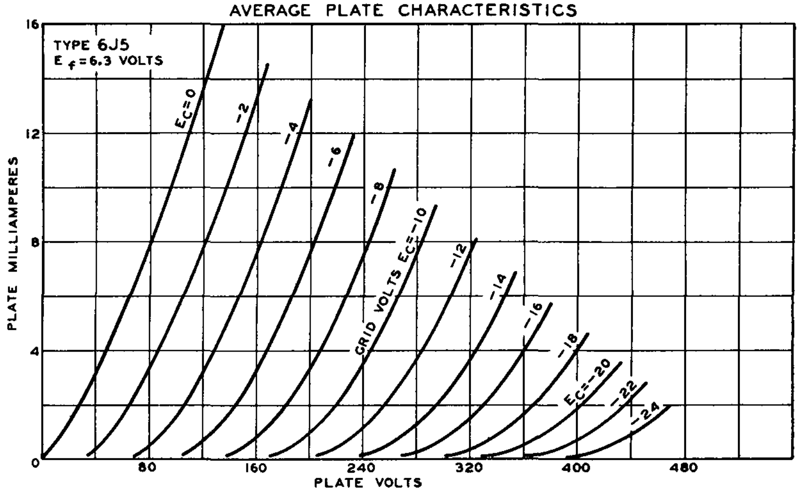

Fig. 12. Manufacturer's $e_p$ — $i_p$ curves for the 6J5. RCA

**Solution.** Draw in the tangent to the *$e_g = -8$-volt* characteristic at $e_p = 250$ volts. Note that the x-intercept extends from 180 volts and is equal to 100 volts; that the y-intercept is 13 ma. Substituting in Equation 12, we obtain

$$r_p = \frac{100}{.013} = 7700 \text{ ohms approx}$$

One more conclusive fact should be emphasized: $r_p$ is not a true constant even for a specific triode; it is always computed for one representative operating point and must not be assumed to be the same for others.

## 16. Transconductance

The definitions of the two tube factors derived in the preceding sections are repeated here for review:

$$\mu = \frac{de_p}{de_g} \qquad (e_g \text{ is constant})$$

$$r_p = \frac{de_p}{di_p} \qquad (i_p \text{ is constant})$$

Now the question is: what would be the effect if $e_p$ were held constant while the plate-current variations ($di_p$) were observed as the grid voltage was changed ($de_g$)? Referring to the curves of Fig. 8, we see that this is the condition depicted if one curve of the family is considered at a time. For curve A, $e_p$ is constant at 200 volts while rising (positive-going) grid voltages cause the plate current to increase. This can define a third tube factor which has great importance in tube calculations. If the ratio of $di_p$ to $de_g$ (with $e_p$ constant) is used as the definition, then the factor is called *transconductance* – conventionally symbolized $g_m$. That is:

$$\text{transconductance} = g_m = \frac{di_p}{de_g} \qquad (e_p \text{ constant}) \qquad (13)$$

The reason for the choice of this term is evident: the ratio of current to voltage is *conductance*, the reciprocal of resistance; the prefix *trans* relates to the transfer of effect that takes place when voltage variations in the grid circuit of a triode produces corresponding changes in the plate current of the same tube while the plate voltage is held constant.

Using the 6BN4 as our example once again, we should arrive at a reasonable approximation of the transconductance by observing the extent of the plate-current variation with a small increment of grid voltage, using the curves of Fig. 9. The question is: which pair of curves and what value of constant plate voltage ought to be selected for this measurement? A cursory glance at the family of curves at once indicates that widely differing values for $g_m$ could be obtained by moving straight up along the 150-volt $e_p$ coordinates from $e_g = -4$ to $e_g = -2$ to $e_g = 0$ volts. Note that with these two *equal* jumps or increments of grid voltage, the plate-current variation ranges from about 2 ma to 8 ma (change of 6 ma ) on the first increment and from about 8 ma to 28 ma (a change of 20 ma) on the second! Which of these changes – 6 ma or 20 ma – should be used as $di_p$ for a $de_g$ of 2 volts? One of these gives a $g_m$ of .003 (units to be discussed next) and the other a $g_m$ of .010.

The answer to this dilemma lies in the proper interpretation of the basic definitions of all the tube factors. *Changes in electrode potentials intentionally introduced to measure tube factors must be very, very small ones.* This concept was introduced when it was shown that the tube characteristics are curved lines, and measurement along any of them must be taken over *virtually infinitesimal distances.* Since this is extremely difficult to do except when one possesses very large graphs on finely divided coordinate paper, it should be attempted only as a last resort. Another method of determining $g_m$ is available and will be described in the next section.

The units chosen for $g_m$ are *micromhos* (μmho). Since transconductance is the reciprocal of resistance, the unit of resistance — the ohm — is spelled backwards to obtain a unit for conductance. The *mho* is thus defined as *the conductance which permits 1 ampere to flow when the potential is 1 volt* or:

$$\text{mhos} = \frac{\text{amperes}}{\text{volts}} \tag{14}$$

The transconductance of most vacuum tubes is of the order of .002 mhos to .009 mhos. To avoid the use of decimal quantities, transconductances are generally given in micromhos (1 μmho = $10^{-6}$ mho) so that the range given above may be expressed as 2000 to 9000 μmhos.

## 17. Relationship of Tube Factors

The equations for μ and $r_p$ reviewed at the start of Section 16 contain a common factor: $de_p$ in one and $-de_p$ in the other. This suggests an interrelationship that should be investigated. As a reasonable start, we might solve each of these for the common factor as follows:

$$-de_p = \mu \; de_g \tag{16}$$

and

$$de_p = r_p \; di_p \tag{15}$$

A negative-going change in $de_p$ followed by an equal positive-going change in the same quantity has the physical significance of plate-voltage constancy. By stating:

$$-de_p = de_p \tag{17}$$

we are symbolically saying that we assume the plate voltage to remain unchanged. Hence we may equate:

$$\mu \, de_g = r_p di_p \tag{18}$$

and converting:

$$\frac{di_p}{de_g} = \frac{\mu}{r_p} \tag{19}$$

since $di_p/de_g$ = transconductance, $g_m$, then:

$$g_m = \frac{\mu}{r_p} \tag{20}$$

or:

$$\mu = g_m r_p \tag{21}$$

Equations 20 and 21 clearly indicate the relationship between the three tube factors and provide a method for finding $g_m$ when the other two are known.

**Problem 2.** According to the tube manufacturer, a 6BN4 triode has an amplification factor of 43 and a plate resistance of 6300 ohms. Find the transconductance of the tube.

**Solution.** Use Equation 20; thus

$$g_m = \frac{\mu}{r_p} = \frac{43}{6300}$$

$$= .006825 \text{ mhos} = 6825 \text{ micromhos}$$

As stated in the manufacturer's literature, the transconductance of a 6BN4 is approximately 6800 micromhos.

In summary, the most accurate method for determining the three tube factors from the plate family of characteristics is to obtain $r_p$ from the reciprocal of the slope of the tangent to the $i_p$–$e_p$ at a point corresponding to the given electrode voltages, $\mu$ from the ratio of $de_p/de_g$, and $g_m$ from Equation 20.

## Review Questions*

1. Show, by analyzing the drawings in Fig. 7, why plate current increases as the potential of the control grid becomes less negative.
2. Define plate-current cutoff. What is the explanation for cutoff based upon the lines-of-force concept used in Fig. 7?

---

* Questions referring to specific tubes require the use of a good receiving-tube manual for operations involving characteristic curves.

3. Explain carefully what is meant by the equation:

$$i_p = F(e_p + \mu e_g)$$

4. Find the plate current in one triode section of a 6J6 when the control grid is at –4 volts and the plate voltage is 250 volts.
5. Approximately what control-grid voltage is required to cut off a 6J5 operating at 240 volts of plate voltage?
6. If the control grid of a 6J5 is held constant at –4 volts, find the plate-current increment when the plate voltage is raised from 80 volts to 160 volts.
7. The plate voltage of a 6CG7 is maintained at exactly 200 volts. What grid voltage change is required to produce a plate-current increment of approximately 5 ma?
8. Referring to Question 7, is the plate-current increment (plate voltage = 200 volts) constant for each equal change of grid voltage? Explain.
9. Using the methods outlined in Section 14, find the amplification factor of one section of a 6CG7 from the plate curves and compare this value with the one given by the manufacturer.
10. Repeat Question 9 for the 2A3.
11. Repeat Question 9 for the 6BF6 triode unit.
12. Verify the value of $r_p$ given by the manufacturer for the 6BF6 triode (8500 ohms) using the –9-volt bias curve and a plate voltage of 250 volts.
13. Explain why $r_p$ cannot be considered a true constant even for a specific tube type.
14. Verify the manufacturer's value for the $g_m$ of the triode portion of the 6BF6 using the relationships of Equations 20 and 21. Explain why small differences are obtained between your value and that given.

## Chapter 4

# LOAD LINES IN THE ANALYSIS OF TRIODE CIRCUITS

### 18. Circuit Symbols

The fundamental triode circuit (Fig. 13) bears various symbols for voltages, currents, and resistances which are based upon those proposed by the Standard Committee of the *Institute of Radio En-*

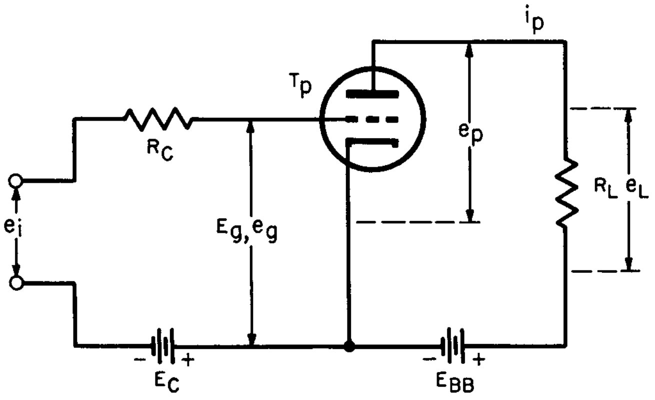

Fig. 13. Fundamental triode circuit.

*gineers.* Although some modifications have been made in the interests of simplicity and clarity, the choice of symbols conforms closely with those found in leading engineering texts.

In general, the subscripts "c" and "g" are associated with the grid circuit while "p" and "bb" apply to the plate circuit of the tube. *Upper-case* letters are used for *fixed* values of voltage, current and resistance; quantities that normally *vary* while the triode is in operation, as an amplifier or oscillator, are symbolized by *lower-case* letters. Thus, the fixed grid and plate voltages are shown by $E_c$ and $E_{bb}$ respectively; circuit components such as resistors, capacitors, coils, etc, also fall into this classification. Variable plate voltage, grid voltage, and plate current are indicated by lower-case letters as shown.

Advanced electrical and electronic engineering textbooks disclose that the symbols given in Fig. 13 are further subdivided to indicate other qualities which we shall discuss, when necessary, by qualifying or annotating those symbols which are already familiar.

## 19. Current and Voltage Relationships

Certain fundamental simplifications in nomenclature are possible in many practical circuits. Some examples follow:

(A) The bias battery $E_c$ is seldom found in modern circuitry since control-grid bias is usually obtained by means of a calculated voltage drop across a cathode resistor (not shown in Fig. 13). However, the use of this battery in circuit diagrams is often an aid in functional analysis of amplifier circuits.

(B) Most vacuum-tube circuits are arranged so that the grid bias is sufficiently negative to prevent the flow of grid current. Under these conditions, there is no voltage drop in $R_c$ and

$$E_g = E_c \tag{22}$$

Also, since the input voltage $e_i$ is assumed to swing over a range in which the positive peak voltage does not exceed the grid bias, there is no a-c grid current flowing. Hence

$$e_g = e_i \tag{23}$$

With zero signal input to the grid, the plate current is a steady value and the current-voltage relationship in the plate circuit is:

$$E_p = E_{bb} - i_pR_L \tag{24}$$

With a sinusoidal voltage applied to the grid from an external signal source, the instantaneous value of the plate voltage $e_p$ is related to the instantaneous plate current $i_p$ at any instant by the equation:

$$e_p = E_{bb} - i_pR_L \tag{25}$$

This equation is not sufficient to determine the current corresponding to any value of $E_{bb}$ because there are two unknowns, $e_p$ and $i_p$. By using the graphical method to be described in the paragraphs that follow, however, it is possible to determine the operating point of any triode having a specific load ($R_L$) and plate-supply voltage $E_{bb}$.

## 20. The Meaning of the Load Line

Equation 25 is *linear* in nature, *i.e.,* it contains no terms above the first order, and therefore must yield a straight line when graphed. To do this, we first agree that $E_{bb}$ and $R_L$ are both constant and that $i_p$ is, therefore, a function of $e_p$. Using the familiar methods of graphical analysis, the graph of a straight line on a set of Cartesian coordinate axes may be found by determining its extremities on the x- and y-axes. Its intersection with the x-axis is found first by assuming the extreme condition of zero plate current. Thus, the $i_pR_L$ term in Equation 25 drops out and we have:

$$e_p = E_{bb} \tag{26}$$

We might have arrived at this conclusion easily by another line of reasoning: if a vacuum tube is in the cutoff condition (zero plate current, or $i_p = 0$) there is no voltage drop in the plate load resistor $R_L$ so that the plate voltage $e_p$ must be equal to the supply potential $E_{bb}$. One coordinate of the straight line representing Equation 25 must therefore lie on the $e_p$ axis and must be located to the right of the origin of the axes by an amount equal to the supply voltage $E_{bb}$ (Point A, Fig. 14).

The second extremity of the graph of Equation 25 is obtained by assuming the condition in which all of the supply potential $E_{bb}$ appears as a voltage drop across $R_L$, leaving nothing for the plate of the tube thereby making $e_p$ equal to zero. Assuming $e_p = 0$ and solving Equation 25 we obtain

$$i_p = \frac{E_{bb}}{R_L} \tag{27}$$

This coordinate is the y-intercept of the graph of Equation 25 and is shown as point B in Fig. 14. The two points may now be joined by a straight line, the graph of Equation 25. From the derivation, it is apparent that the slope of the line depends upon both constants — $E_{bb}$ and $R_L$ and since, in average equipment design, the value of $E_{bb}$ is approximately established while $R_L$ is varied to obtain the desired amplifier characteristics, this graph is called the *load line.**

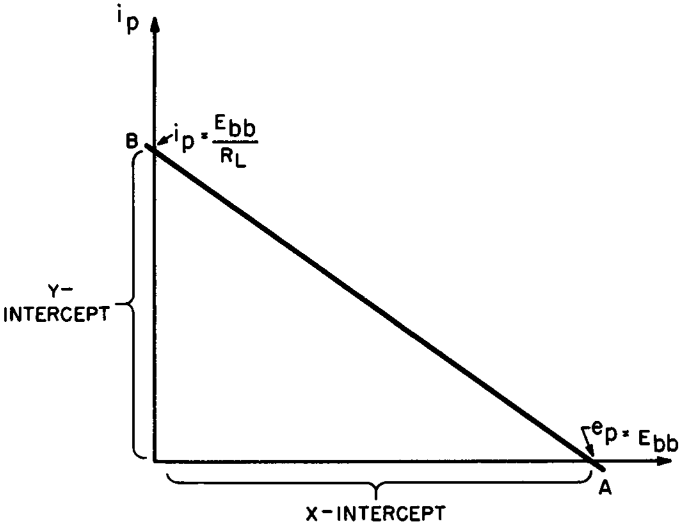

**Fig. 14. The load-line construction graph of a linear equation (Equation 25).**

The fundamental usefulness of the load line is best when it is

---

* Note that Equation 25 is the equation of a straight line. Thus the load line could be obtained from any two points that lie along it. It is conventional to use the points established by $I_b = 0$ and $E_b = 0$ because these are so easily obtained.

drawn into a family of plate-characteristic curves. Although the curves drawn in the next few figures are based upon the performance of a specific triode (the 6BF6 medium-mu type), they will be used to represent triodes in general in the following explanatory illustrations and practice problems.

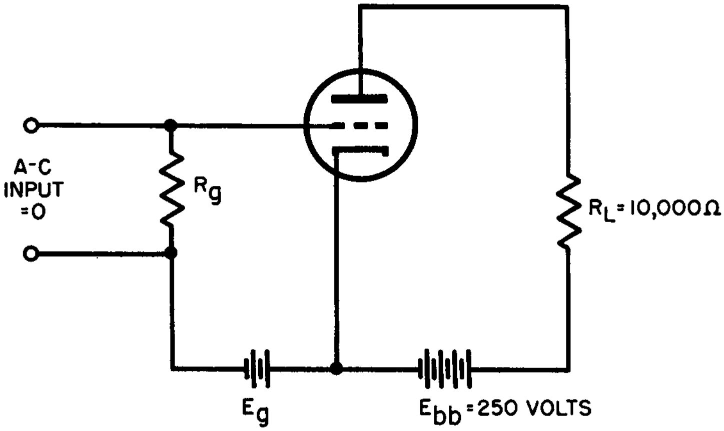

**Fig. 15.** Schematic diagram showing a static triode circuit.

The intercepts of the load line are easily obtained from Equations 26 and 27 when the load resistance $R_L$ and the supply voltage $E_{bb}$ are known. Consider the static circuit of Fig. 15. Substituting 10,000 ohms for $R_L$ and 250 volts for $E_{bb}$ in these equations yields these results:

x-intercept $e_b = E_{bb}$

$$= 250 \text{ volts}$$

y-intercept $i_p = \frac{E_{bb}}{R_L}$

$$= \frac{250}{10{,}000}$$

$$= .025 \text{ ampere}$$

$$= 25 \text{ ma}$$

The load line connecting these two extremes is shown in Fig. 16.

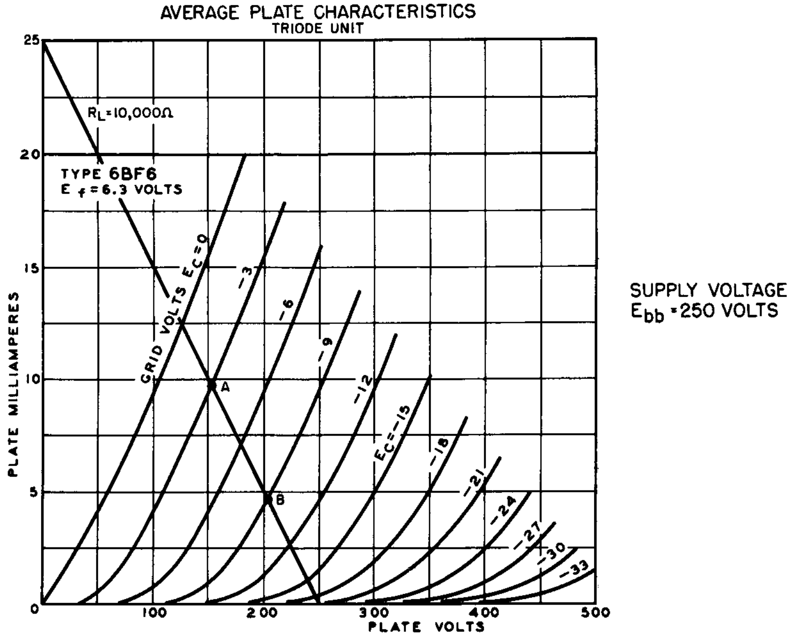

Fig. 16. Load-line conditions outlined in text. RCA

## 21. Applications of the Load Line in Static Circuits

A number of important facts about the behavior of the tube may now be extracted from plate-characteristic family and its load line for the chosen values of $R_L$ and $E_{bb}$.

(1) *The static plate current for any value of grid bias* — The intersection of the load line and each of the curves gives this information at a glance. At a grid bias of −3 volts, the plate current is about 9.5 ma; when the bias is raised to −9 volts, the plate current drops to about 4.8 ma (A and B in Fig. 16). There are many practical problems, particularly in industrial circuits, where this sort of information is invaluable in speeding the solution, as exemplified by the following illustrative problem.

**Problem 3.** An 8000-ohm relay is to serve as the plate load of the triode. The supply is to be 100 volts and the relay is specified at 3 ma pull-in current. What value of grid voltage is required to just prevent pull-in current from flowing through the relay coil? (This is the idling condition preparatory to energization of the relay with an incoming positive triggering pulse.)

**Solution.** Determine the x- and y-intercepts of the load line for a load resistance $R_L = 8000$ ohms and a supply voltage $E_{bb} = 100$ volts.

x-intercept
$$e_p = E_{bb}$$
$$= 100 \text{ volts}$$

y-intercept
$$i_p = \frac{E_{bb}}{R_L}$$
$$= \frac{100}{8000}$$
$$= .0125 \text{ ampere} = 12.5 \text{ ma}$$

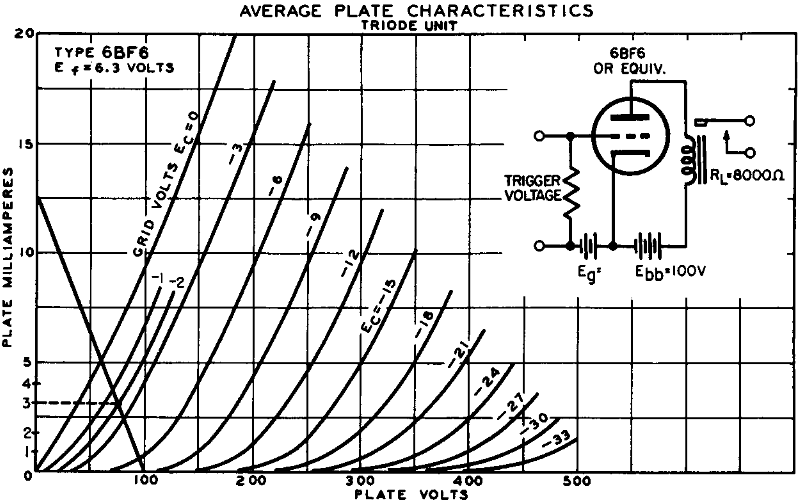

Fig. 17. Load line for $R_L$ = 8000 ohms. RCA

Draw in the load line as in Fig. 17. Find 3 ma on the y-axis and draw a horizontal line to the right from this point until it intersects the load line. Note that this intersection falls about midway between the −3-volt and −2-volt bias lines. Thus, if the grid bias is made slightly greater than 2.5 volts, the relay will remain de-energized.

(2) *The division of the supply voltage between the tube and the load* – Referring again to point B, Fig. 16, note that the intersection of the load line and the −9-volt bias curve occurs at approximately 200 plate volts. Thus, for this bias voltage, the supply potential of 250 volts divides in such a manner that 50 volts appears across the load and 200 volts across the tube between plate and cathode. Since the tube and load are in series, the power dissipated

in each, due to a given plate current, varies in the same proportion as the respective voltage drops. It is often important to determine the distribution of power in such a circuit, so that this an important detail. A sample calculation of power dissipation in the load is given in Problem 5. Similarly at point A, we see that the actual plate voltage is slightly over 150 volts when the grid bias is reduced to −3 volts.

**Problem 4.** A 6BF6 triode is arranged in the amplifier circuit shown in Fig. 18. The fixed grid bias is −9 volts, the plate-supply voltage $E_{bb}$ is 450 volts, and the load resistance $R_L$ is 25,000 ohms. What is the highest instantaneous plate voltage that will appear between the plate and cathode of the tube ($e_p$) if the a-c signal input is 6 volts peak-to-peak.

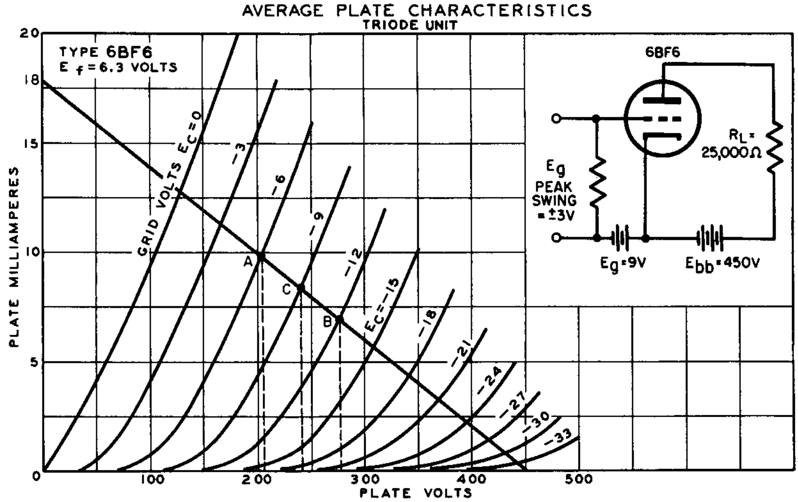

Fig. 18. Load line for 6BF6 with $R_L$ = 25,000 ohms. RCA

**Solution.** Find the intercepts of the load line for $R_L = 25{,}000$ ohms and $E_{bb} = 450$ volts. Draw the load line into the plate characteristics as in Fig. 18.

x-intercept $e_p = E_{bb} = 450$ volts

y-intercept $i_p = \dfrac{E_{bb}}{R_L} = \dfrac{450}{25{,}000} = 18$ ma

Since the fixed bias is −9 volts and the peak-to-peak signal swing is 6 volts (3 volts above and 3 volts below the operating potential of −9 volts), the total swing ocurs from A to B in Fig. 18. Point C is the static operating point. Dropping perpendiculars from each of these points to the *plate volts* axis, we see that the highest voltage that appears across the tube is approximately 277 volts. This is sufficiently below the manufacturers maximum rating of 300 volts $e_p$ for this type so that the tube is being operated well within its rating.

**Problem 5.** In the circuit of Fig. 18, what is the minimum power-dissipation rating the load resistance may have under static conditions of operation?

**Solution.** This problem may be handled in two ways:

(A) Since the voltage drop across the tube under static conditions is approximately 240 volts, then the voltage across the load resistor is 450 − 240 = 210 volts. Applying the power equation:

$$P = \frac{E^2}{R} = \frac{210^2}{25{,}000} = 1.7 \text{ watts}$$

(B) The plate current under static conditions is 8.3 ma. Substituting this in the alternative form of the power equation:

$$P = I^2R = .0083^2 \times 25{,}000 = 1.7 \text{ watts}$$

Thus, 1.7 watts is the minimum power-dissipation rating of the load resistor in this example.

## 22. Load Lines Applied to Amplifier-Voltage Gain

A discussion of the applications of load lines cannot be divorced from the general subject of amplifiers. Since amplifiers of all types are studied elsewhere in this series, no attempt will be made to derive the equations used illustratively in this section. Certain definitions and concepts will be presented briefly, however, in the interests of clarity.

The voltage gain of an amplifier tube is defined as the ratio of the peak-to-peak voltage swing that appears across the load resistor to the peak-to-peak voltage swing applied by the input signal to the grid of the tube. That is:

$$\text{voltage gain} = \frac{e_{b\ \text{max}} - e_{b\ \text{min}}}{e_{g\ \text{max}} - e_{g\ \text{min}}} \tag{28}$$

Once the load-line diagram has been drawn for a particular tube with specific values of supply voltage and load resistance, the voltage gain is obtainable almost at a glance. Let us use Fig. 16 as an illustration.

With an input signal of 6 volts peak to peak, the input swing

$e_{g\,max} - e_{g\,min}$ is also 6 volts. Referring to Fig. 16, a swing of this magnitude around the operating point reflects itself in a varying plate voltage which ranges from 209 volts (point A) to 277 volts (point B). In each of these extremes, the output voltage across the load resistor is the difference between the tube drop and the supply voltage $E_{bb}$; hence the output voltage must vary from 241 volts (450 − 209) to 173 volts (450 − 277).* Substituting in Equation 28:

$$\text{voltage gain} = \frac{241 - 173}{6} = \frac{68}{6} = 11.3$$

Note that the voltage gain or *actual voltage amplification* of the circuit is not the same as the amplification factor ($\mu$) of the tube. The 6BF6 triode, around which the illustration is woven, has a $\mu = 16$, whereas the voltage gain in this circuit is only 11.3. Evidently, from the implications of the load-line diagram, voltage gain depends not only upon the tube used but also upon the plate-load resistance, both of which are accounted for in the method just employed.

This relationship is evident in the algebraic equation for voltage gain or amplification:

$$\text{voltage gain} = \frac{\mu R_L}{R_L + r_p} \tag{29}$$

in which $\mu$ is amplification factor, $R_L$ is load resistance, and $r_p$ is dynamic plate resistance. This equation may be used to verify the load-line method of determining voltage gain by referring to a tube manual for the required parameters. The figures for the 6BF6 are: $\mu = 16$ and $r_p = 8500$ ohms. The load resistance in our example is still 25,000 ohms. Substituting these values in Equation 29:

$$\text{voltage gain} = \frac{16 \times 25{,}000}{25{,}000 + 8500}$$
$$= 11.9$$

The reason for the difference between this value and the one obtained from the load line is clearly one of approximation in reading the figures from the rough coordinate divisions used in the example.

---

* Since the output voltage swing is merely the difference between the actual plate voltages (or tube drop) at the two extremes of voltage swing, the output swing may be obtained by subtracting plate voltages at B and A in Fig. 16. Thus 277 − 209 = 68 volts.

**Problem 6.** Using the load-line method, find the voltage gain of a 6BF6 when the supply voltage $E_{bb}$ = 250 volts and the load resistance $R_L$ = 10,000 ohms. (Figure 16 will help you solve this problem.)

**Solution.** A convenient grid-voltage swing within the tube's ratings should be selected. In Fig. 16, the variation from A to B is a good choice. Approximating closely, the grid-potential variation may be taken from –3 volts to –9 volts, a swing of 6 volts. For the peak grid voltages, the respective plate voltages are 150 volts and 200 volts; thus, the output voltage of each of these limits is respectively 100 volts and 50 volts. Hence:

$$\text{voltage gain} = \frac{50}{6} = 8.3$$

Again, this result is a close approximation of that obtained from Equation 29. When the appropriate substitutions are made in this equation the voltage gain obtained is 8.6.

One of the implications of Equation 29 is that the voltage gain of a triode amplifier circuit becomes equal to the amplification factor of the tube *only when the load resistance $R_L$ becomes infinite in size.* That is, as $R_L$ approaches infinity $R_L/R_L + r_p$ approaches unity and voltage gain becomes identical with $\mu$. It is interesting to investigate briefly the effect of assuming $R_L$ = infinity on the position of the load line.

This assumption does not affect the x-intercept in any way; regardless of the magnitude of the load resistance, the supply voltage appears across the tube when the plate current is taken as zero, *i.e.,* there can be no voltage drop in $R_L$ when there is no current flowing in it. The y-intercept, on the other hand, is seriously affected since there can be no plate current in a tube whose load resistance is infinite. Thus, no matter what is done to the tube, $i_0$ remains zero and so does the y-intercept. The load line for this theoretical condition therefore is coincident with the x-axis and simply does not exist as a meaningful entity.

## 23. Amplifier-Power Output by Load-Line Method

The precise performance of an amplifier tube of the power variety may be predicted by equations of the power-series type. When the load is a pure resistance, however, the behavior of a power triode may be computed from the load line with a high degree of accuracy and with substantially less work. Even when the load is partly reactive, data sufficiently precise for most practical purposes may be obtained from the resistive load-line diagram.

The useful tube output in a standard amplifier circuit is given by the equation:

$$P = \frac{(e_{p\ max} - e_{p\ min}) \times (i_{p\ max} - i_{p\ min})}{8} \tag{30}$$

The derivation of Equation 30 is as follows:
Peak-to-peak voltage swing $= e_{p\ max} - e_{p\ min}$
Peak-to-peak current swing $= i_{p\ max} - i_{p\ min}$
Peak-to-peak values are converted to rms values by dividing by $2\sqrt{2}$.
Hence, since $P_{rms} = e_{rms} \times i_{rms}$

Then $$P = \frac{(e_{p\ max} - e_{p\ min}) \times (i_{p\ max} - i_{p\ min})}{2\sqrt{2} \times 2\sqrt{2}}$$

or $$P = \frac{(e_{p\ max} - e_{p\ min}) \times (i_{p\ max} - i_{p\ min})}{8}$$

To investigate the load-line method of determining power output, consider a typical popular triode (such as the 2A3 or 6B4) with these significant characteristics and circuit parameters:

$E_{bb} = 400$ volts
$R_L = 2500$ ohms
$E_g = -40$ volts
$e_i = 40$ volts peak-to-peak

Figure 19 presents these factors in load-line form. The quantities needed for the solution of Equation 30 are obtained as follows:

$e_{p\ max} = 300$ volts
$e_{p\ min} = 170$ volts
$i_{p\ max} = 90$ ma $= .090$ ampere
$i_{p\ min} = 40$ ma $= 0.40$ ampere

When these figures are substituted in Equation 30, we obtain:

$$P = \frac{(300 - 170) \times (.090 - .04)}{8}$$

$$= \frac{6.5}{8} = 81 \text{ watts}$$

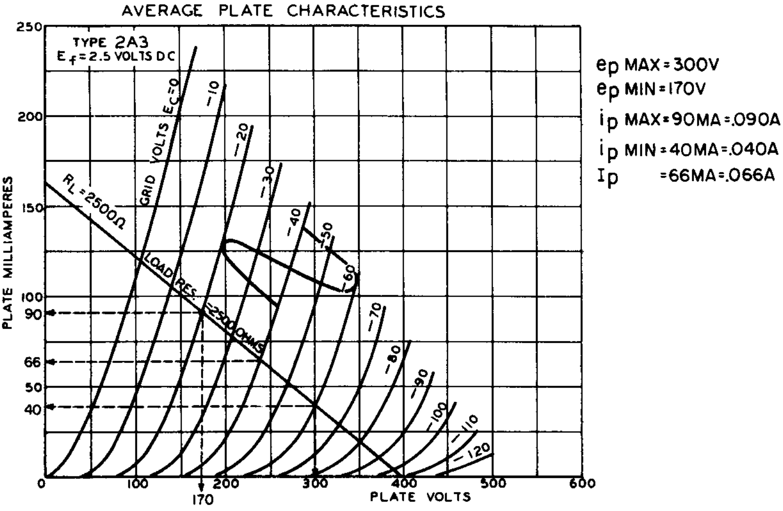

Fig. 19. Load line of 2A3 with $R_L$ = 2500 ohms. RCA

This answer represents the power transferred into the load by the tube as a result of an a-c signal input having a peak-to-peak voltage of 40 volts.

**Problem 7.** Find the power transferred into a 4000-ohm load by the tube just described operating under identical supply-voltage and signal-input conditions as above.

**Solution.** Figure 20 shows the load line when the circumstances are altered as given in the problem. The plate voltage $e_p$ swings between 285 and 155 volts or over 130 volts as in the previous illustration; the plate current swings between 65 ma and 30 ma, a range of only 25 ma. Substituting in Equation 30 and solving for power output, we obtain approximately *0.57 watt.* Note that the severe reduction in power output has occurred as a result of the plate-current swing between relatively close values.

If we were inclined to jump to hasty conclusions, we might feel that the foregoing problem implies that greater and greater power output is obtainable as the plate-load resistor is diminished in value. As a matter of fact, the greatest power output is obtained when $R_L$ is matched to the plate resistance of the tube — in this case 800 ohms. If we draw the load line for this condition, however, it is immediately clear that the peak plate current is excessive when the grid is positive-going; this would therefore require an increase in negative bias;

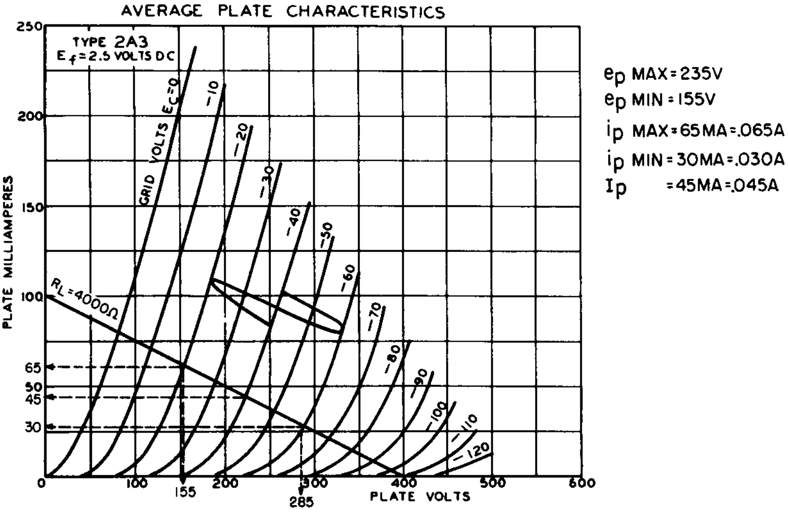

Fig. 20. Load line when $R_L = 4000$ ohms. RCA

but the moment this is done, the tube begins to operate on the highly curved bias lines from −70 to −110 volts. This results in severe distortion. The plate-load resistance of 2500 ohms recommended by the manufacturer has been selected on an all-around-compromise basis: good power output with medium signal input and low distortion.

## 24. Calculation of Harmonic Distortion by the Load-Line Method

The load-line diagram lends itself well to rapid and fairly precise evaluation of harmonic distortion. This type of distortion is generally the result of operating a vacuum-tube amplifier on the curved portions of its plate characteristics and is usually the result of incorrect bias, improperly selected load resistance, or excessive signal voltage applied to the grid.

The percent harmonic distortion is given by the equation:

$$\%\ \text{harmonic distortion} = \frac{\frac{1}{2}\,(i_{p\,\max} + i_{p\,\min}) - I_p}{i_{p\,\max} - i_{p\,\min}} \times 100 \qquad (31)$$

in which $I_p$ is the quiescent d-c plate current.

Since the conditions in Fig. 19 are those recommended by the manufacturer for this particular tube, let us calculate the percent distortion for this case first:

$$e_{p\ max} = 300 \text{ volts} \qquad e_{p\ min} = 170 \text{ volts}$$

$$i_{p\ max} = .090 \text{ ampere} \qquad i_{p\ min} = .040 \text{ ampere}$$

$$I_p = .066 \text{ ampere}$$

When these figures are substituted in Equation 31, we obtain:

$$\% \text{ harmonic distortion} = \frac{\frac{1}{2}\ (.090 + .040) - .066}{.090 - .040} \times 100$$

$$= \frac{\frac{1}{2}\ (130) - .066}{.050} \times 100$$

$$= \frac{.001}{.050} \times 100 = 2\%$$

It is generally recognized that harmonic distortion of this low order is seldom discerned by any but the most discriminating ear trained in audio work; along the same lines, distortion above 5% is detectable by most listeners.

Similar computations are carried out below for the conditions

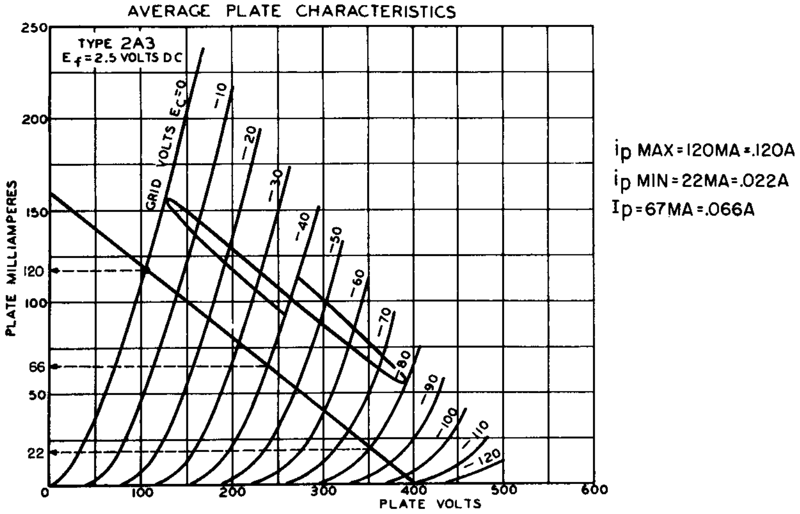

Fig. 21. Load line for distortion calculations when signal input is large. RCA

illustrated in Fig. 20. In this case, the bias is correct and the signal input reasonably low, but the load resistance is considerably larger than recommended ($R_L = 4000$ ohms).

$$\% \text{ harmonic distortion} = \frac{\frac{1}{2}\ (.065 + .030)\ -\ .045}{.065 - .040} \times 100$$

$$= \frac{.0025}{.035} \times 100 = 8.6\%$$

Excessive distortion of this order is readily apparent and quite objectionable. The situation can be remedied by reducing the load resistance to the value recommended for the tube by the manufacturer.

The effect of increased grid-signal input is shown in Fig. 21 for which the percent harmonic distortion calculations are shown in the following substitutions in Equation 31:

$$\% \text{ harmonic distortion} = \frac{\frac{1}{2}\ (.142)\ -\ .066}{.098} \times 100$$

$$= \frac{.005}{.098} \times 100$$

$$= 5.6\%$$

Although just beyond the recognized threshold of audibility, this percentage of harmonic distortion is significant. The obvious cure is to reduce the signal input enough to keep the tube working over more nearly linear characteristics.

## Review Questions

1. Using Equation 25, show that the plate current of a vacuum tube is a function of the plate voltage in a normal circuit in which both $E_{bb}$ and $R_L$ do not change.
2. In obtaining the coordinate Equation 27, $e_p$ was assumed equal to zero. What condition within the vacuum tube is being tacitly assumed in order to permit $e_p$ to drop to zero?
3. Using the average plate characteristic of the tubes given below, draw in the load line for each of the values of $R_L$. (Any good tube manual will provide the average plate characteristics.)

| Tube | $E_{bb}$ | $R_L$ |
|---|---|---|
| 6J6 (one section) | 200 volts | 5000 ohms |
| 6CG7 (one section) | 300 volts | 15,000 ohms |
| 6BC8 (one section) | 150 volts | 5000 ohms |
| 6AV6 (triode) | 400 volts | 200,000 ohms |
| 6AT6 (triode) | 400 volts | 80,000 ohms |
| 6AQ6 (triode) | 400 volts | 10,000 ohms |

4. Find that static plate current in each of the following cases: (Use the load lines drawn in Question 3.)

| Tube | Grid Bias | $E_{bb}$ | $R_L$ |
|---|---|---|---|
| 6J6 | 0 volts | 200 volts | 5000 ohms |
| 6J6 | +4 volts | 200 volts | 5000 ohms |
| 6CG7 | –4 volts | 300 volts | 15,000 ohms |
| 6AT7 | –2 volts | 400 volts | 80,000 ohms |

5. A 6AT6 triode is arranged in an amplifier circuit in which the peak-to-peak signal input is expected to be 2 volts. If the fixed grid bias is –3 volts, the plate-supply voltage 400 volts, and the load resistance 80,000 ohms, what is the highest value of instantaneous plate voltage that will appear across the tube?
6. In the amplifier circuit described in Question 5, what power-dissipation rating should be chosen for the load resistor to provide a safety factor of about 50%?
7. Find the voltage gain for each of the examples used in Question 4. Assume that the input-grid swing is 2 volts peak to peak in each case (*i.e.*, 1 volt each side of fixed bias). Compare the amplification factor for the tube and explain why there is an appreciable difference between voltage gain and $\mu$.
8. Explain why the voltage gain of a vacuum tube approaches the amplification factor only as $R_L$ approaches infinity. Use Equation 29 in this explanation.
9. A 6B4 power triode is to be worked into a 1500-ohm plate load. The plate supply voltage is 300 volts and the grid bias is –30 volts. Find the power output into the load when the driving voltage is 40 volts peak to peak. (Use the load-line method.)
10. Calculate the harmonic distortion percentage in the amplifier of Question 9.
11. Explain why distortion is increased when the signal-input voltage to an amplifier is raised beyond its critical level.

## *Chapter 5*

# CHARACTERISTICS OF MULTIGRID TUBES

### 25. Review of the Tetrode

The grid and plate of a triode are adjacent metallic elements in space. The proximity of these electrodes determines the capacitance between, usually several micromicrofarads. The grid-plate capacitance of a 6J5, for example, is about 3.5 μμf, that of a 6SQ7 a little less than 2 μf, and that of a 2A3 as high as 16.5 μμf.

In a high-gain triode, a capacitance of 1 or 2 μμf is likely to produce uncontrolled sustained oscillation by permitting in-phase feedback from the plate to the grid circuit of the tube. Such instability, particularly at the higher frequencies, has made it impracticable to construct triodes having amplification factors greater than 100.

The original tetrode or four-element tube was primarily designed to reduce grid-plate capacitance and so enable manufacturers to offer tubes having substantially higher voltage-amplifications than this. By placing a second grid between the control grid and the plate

(Fig. 22) and by maintaining the a-c potential of this *screen grid* at a value equal to that of the cathode, it proved possible to reduce the grid-plate capacitance manyfold.

To serve as an effective electrostatic shield, the screen grid is usually tied dynamically to the cathode so that no difference of potential can ever exist between these electrodes. If this connection were a direct one in which the static or d-c voltage of the screen grid were the same as that of the cathode, the field inside the tube would be distorted severely enough to impede the normal flow of electrons from cathode to plate. For this reason, the screen grid is held at a *d-c potential* that is positive with respect to the cathode and control grid. This difference in the static and dynamic potential states is accomplished by using a relatively low impedance capacitor (for the frequency being employed) between the screen and cathode, as illustrated in Fig. 23. Screen current, as well as plate current, is supplied by the cathode in the plate shown in the diagram; thus, the d-c voltage on each electrode is a function of both the supply voltage $E_{bb}$ and the values of the respective series resistors.

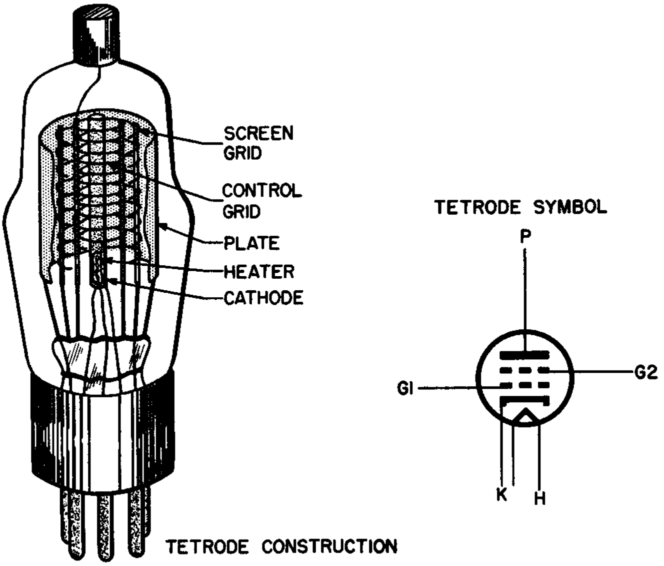

Fig. 22. The position of the screen grid in the tetrode vacuum tube.

Aside from the problem of interelectrode capacitance in high-frequency service, a second difficulty exists in all tubes, whether triode, tetrode, or pentode: the matter of *lead inductance.* Any conductor, regardless of shape or length, possesses a certain amount of inductance. A wire lead, used to connect the element of a tube with the corresponding socket lug, has a very tiny inductance which is effectively negligible at normal and reasonably high frequencies. As the operating frequency is raised, however, the inductive reactance of even a small inductance like this may become appreciable, giving rise to choking effects in some cases, or resonance in others. In most instances, either one of these phenomena may be detrimental to the performance of the tube. Modern uhf tubes are designed with leads as short as possible, minimizing the effect of lead inductance.

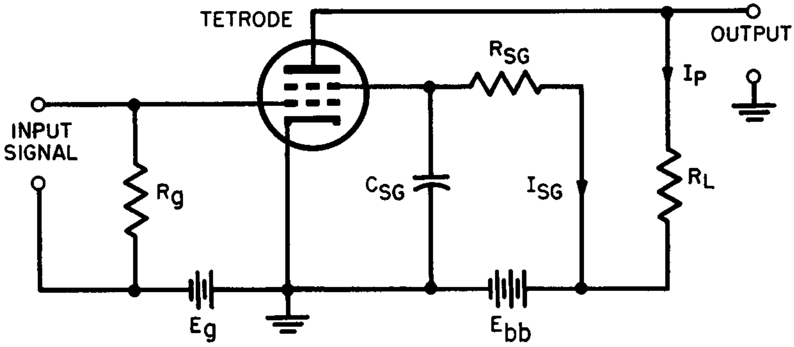

Fig. 23. Schematic diagram showing the screen connections in a tetrode.

## 26. Tetrode Characteristics

The presence of a shielding electrode — the screen grid — between the plate and the grid leads to other important changes in the behavior of tetrodes as compared with triodes. With a dynamically grounded screen grid between the plate and all the other tube elements, the plate is also shielded to a large degree from the cathode. The electrostatic field produced by the difference of potential between the plate and filament exercises significant control over the plate current in the triode. The action of the screen grid, however, is to reduce the effectiveness of the plate's field to the point where *the plate current is relatively independent of the plate voltage.*

A second way to view the situation is to consider the screen grid as an accelerating anode which draws electrons from the space-charge region in the tube and passes them on to the plate. This means that the number of electrons taken from the space charge depends to a much greater degree upon the screen voltage than upon the plate voltage.

On the other hand, the effectiveness of the control grid over the plate-current stream is not seriously affected since its relative position between positive and zero-potential elements has not been changed. Since amplification factor ($\mu$) is *the ratio of a change in plate voltage to that change in grid voltage which holds the plate current constant,* the amplification factor of a tetrode must be very high compared to an equivalent triode. This follows from the fact that a much greater alteration of plate voltage is required in the tetrode to offset or balance a given change of grid voltage. That is, plate voltage must be varied over a wide range to produce an appreciable modification of plate current.

### TABLE IV

### COMPARISON OF A TRIODE AND A TETRODE

| Characteristic | Triode (6J5) | Tetrode (24A) |
|---|---|---|
| Grid – plate capacitance | 3.5 $\mu\mu$f | .01 $\mu\mu$f (approx) |
| Amplification factor ($\mu$) | 20 | 630* |
| Plate resistance ($r_p$) | 7000 ohms | 600,000 ohms |

Similarly, the plate resistance of a tetrode is much higher than that of an equivalent triode. Plate resistance ($r_p$) is the ratio of a change in plate voltage to the corresponding change in plate current. As previously explained, large changes in plate voltages cause comparatively small changes in plate current making the ratio $de_p/di_p$ quite large.

Thus, a tetrode is characterized by a low grid-plate capacitance, large amplification factor, and high plate resistance. Although tet-

---

* The amplification factor of a tetrode is never given by tube engineers because it is not as meaningful as in the case of a triode. If the plate current were entirely independent of plate voltage, then $\mu$ would be infinitely large — an obvious impossibility. The figure for $\mu$ given above is an approximate one obtained by using Equation 21 and is listed here only for comparison purposes.

rodes have been superceded by pentodes (to be discussed in the next section), it is useful to compare a typical tetrode with an equivalent triode with respect to these characteristics.

## 27. Tetrode Plate Characteristics

The obsolescence of the tetrode is due largely to the nonlinearity of its plate characteristic (Fig. 24). A single member of the family is sufficient to illustrate the most serious defect of this tube type.

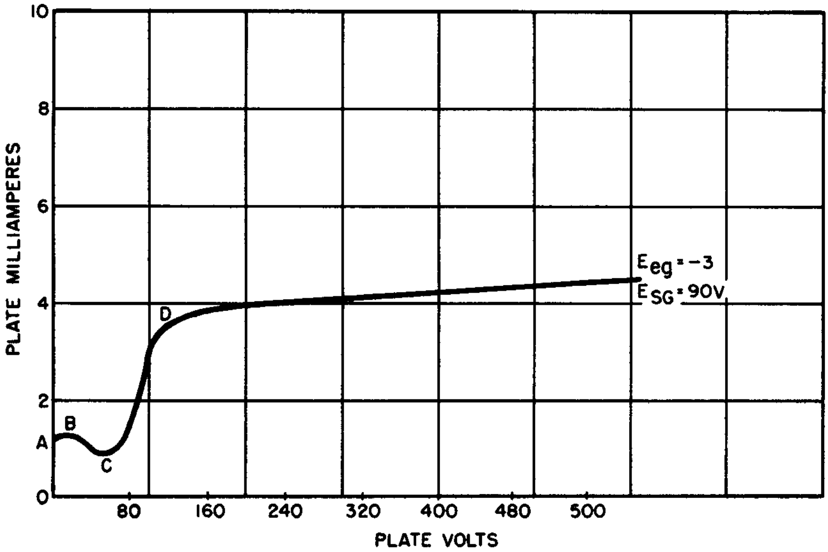

Fig. 24. Plate characteristics of a tetrode, type 24A.

At a given control-grid bias (in this case —3 volts) the characteristic starts out normally enough between A and B as the plate potential is raised from 0 to about 15 volts. At this point, however, the plate current takes a severe dip, going steadily downward until the plate potential approaches 60 volts (C). From here, it rises sharply to D at about 120 volts, then straightens out and becomes quite linear beyond this point.

The pronounced dip is caused by secondary emission from the plate. When a conducting surface such as the anode of the tube intercepts an electron moving at high speed, one or more secondary electrons may be dislodged from the surface. If the screen grid is at a higher positive potential than the plate, the secondary electrons are impelled toward the screen thereby reducing the plate current by an amount determined by the number of secondary electrons emitted. The direction of the secondary flow is opposite to that of the cathode-to-grid stream, a fact which explains the reduction of plate current by secondary emission.

The general shape of the curve may be traced step-by-step on the basis of increasing plate voltage as follows (Fig. 24):

*A to B* – Plate voltage is extremely low in this region. Primary electrons that manage to arrive at the plate do not possess enough kinetic energy to dislodge secondary electrons, hence the curve begins to move in the expected direction.

*B to C* – The screen voltage (90 volts) is higher than the plate voltage throughout this region; secondary electrons flow backward from plate to screen grid, reducing the cathode-to-plate current.

*C to D* – In this portion of the curve, the plate and screen potentials are very nearly equal. As the plate voltage rises above 90 volts, nearly all of the secondary electrons are drawn back to the plate producing a sharp rise of plate current.

*D to E* – The plate potential is now considerably higher than the screen potential; all secondary electrons return to the plate. The screen has now taken over its shielding action as shown by the very gentle rising slope of the plate-characteristic curve. Note that very large increases in plate voltage cause very small increases in plate current, illustrating the relative independence of plate current relative to plate voltage.

To use a tetrode as an amplifier in which a high percentage of distortion is intolerable, proper operating conditions must be carefully arranged and maintained. As long as the tube works in the D to E region, no trouble is experienced. This is often a difficult requisite, and in many cases it introduces serious design problems.

## 28. Pentode Characteristics

The tetrode dip may be completely eliminated by inserting a third grid between the screen grid and the plate (Fig. 25). This grid, called the suppressor, may either be connected to the cathode directly inside the tube or may be connected to a common ground point via one of its socket lugs. Power pentodes usually contain the internal suppressor-to-cathode jumper while high-gain voltage-amplifier pentodes are most often equipped with a connection that permits external suppressor-to-cathode wiring or grounding to a common zero-potential point.

Contrary to statements often found in the literature, a suppressor grid does *not* suppress or otherwise limit secondary emission. The dislodging process goes on all the same through the entire operating range of the tube as it did in the tetrode. The difference is this: secondary electrons which normally would tend to move in the reverse direction from the plate to the screen now encounter a zero-potential barrier in the form of the suppressor grid and are caused to turn around and return to the plate. The net effect of this action on the tube is to make it perform as though secondary emission had

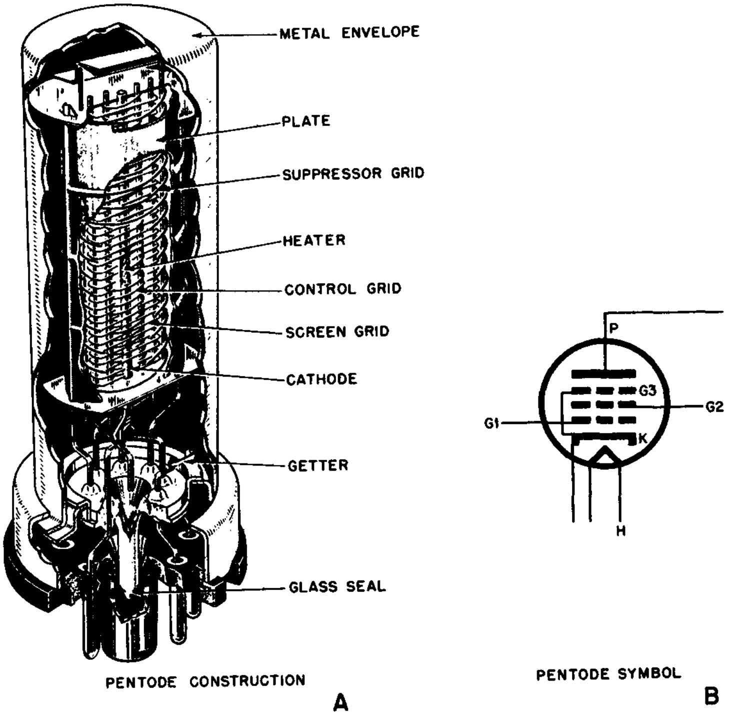

PENTODE CONSTRUCTION

PENTODE SYMBOL

Fig. 25. Structure of the pentode.

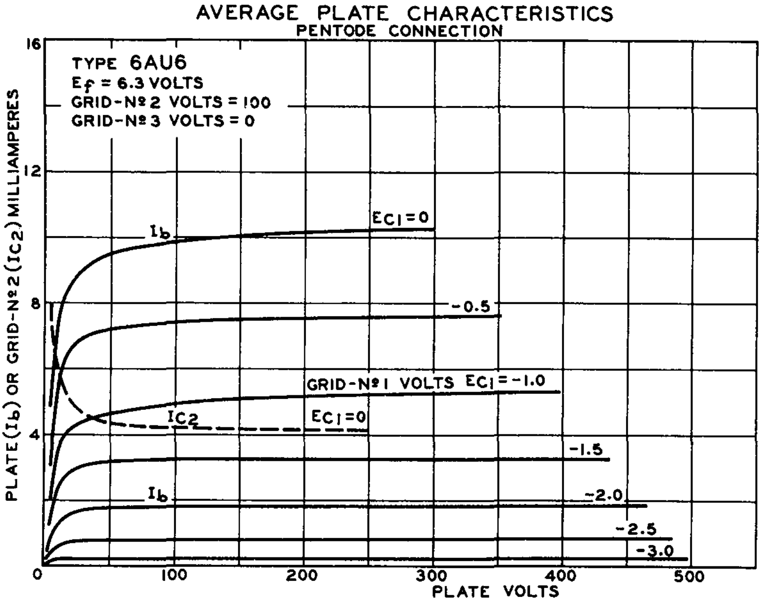

Fig. 26. Average plate characteristics of a modern voltage amplifier pentode. *RCA*

not occurred at all. Figure 26, which illustrates the average plate characteristic of a typical modern voltage-amplifier pentode (6AU6), substantiates this point.

A study of these curves readily leads to certain important conclusions with respect to voltage-amplifier pentodes.

(A) Examine the −2-volt curve. Note how it parallels the 2-ma plate-current coordinate over virtually all of its length showing how little effect plate-voltage variation has upon plate current. As a further illustration of this point, note that the plate resistance of this tube is as high as 1,500,000 ohms under certain normal conditions of operation!

(B) Over the linear operating portion of the plate characteristic, the screen current is also independent of the plate voltage. For a specific screen-grid voltage, the screen current remains substantially constant when the plate voltage is approximately 100 volts or more.

(C) The transconductance of this tube is of the order of 5000 µmhos while its plate resistance for this $g_m$ is 1 megohm. In accordance with Equation 21 which indicates that the amplification possibilities of a tube may be roughly predicted by the product of $g_m$ and $r_p$, this tube has the ability to yield voltage gains very much in excess of the best triode. For example, the highest stable voltage gain of the 6SF5 is about 70 times, while that of the 6AU6 is somewhat better than 370 times.

## 29. Variable-mu Pentodes

A representative grid–plate transfer curve ($e_g - i_p$) of a standard pentode is shown in Fig. 27. This curve is a plot of plate current (in ma) *vs* grid potential (in volts) with plate voltage maintained constant. This curve is useful because, with its aid, the manner in which the plate current of a tube swings in response to variations in applied grid potential can be easily pictorialized. Note that, as long as the grid variations are confined to a linear portion of the curve

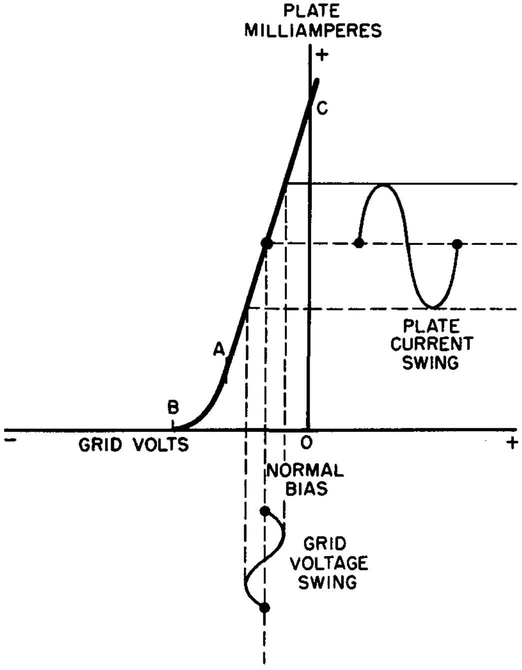

**Fig. 27.** Typical grid-plate transfer curve ($e_g - e_p$) of a standard pentode.

as illustrated in Fig. 27, the plate-current variations are exactly the same in waveform. Over most of the characteristic (C to A), the curve is reasonably linear. As cutoff (B) is approached, however, the curvature becomes quite severe. Normally, a pentode voltage amplifier is biased at some point midway between C and A so that even relatively large signal swings do not drive the tube beyond the linear portion of the characteristic.

When such a pentode is used as an r-f amplifier in a receiver, it is often imperative to increase the bias beyond this normal point to reduce tube gain and prevent overloading. As the operating point of the system approaches and passes point A due to increased bias, two undesirable effects may occur either singly or simultaneously: *cross-modulation* and *modulation distortion.*

*Cross-modulation* is defined in the Standards Report of the IRE as "a type of intermodulation due to modulation of the r-f carrier of the desired signal by an undesired signal." In a radio-frequency amplifier, cross-modulation results in interference between two adjacent carriers, an effect in which the undesired signal "rides through" on the carrier of the station to which the receiver is tuned. We can show that this type of interference is due to operating the amplifier tube on the curved portion of the $e_g - i_p$ curve.

*Modulation distortion* is a phenomenon in which the received modulated carrier is distorted by nonlinear operation resulting in distortion of the demodulated audio signal. Both modulation-distortion and cross-modulation represent serious limitations on the scope of pentode operation, particularly in radio and intermediate-frequency applications. These defects are minimized by changing the design of the control-grid structure of the tube as shown in Fig. 28.

The grid turns are widely spaced near the center of the axis and much more closely spaced near the ends. When the incoming signal is weak and the control grid is biased very slightly for maximum gain, the nonuniform grid spacing has no appreciable effect and the tube behaves like any other pentode. As the signal intensity increases, the bias is usually made more negative to prevent overloading. Under these conditions, the closely wound end sections of the control grid approach cutoff rapidly while the widely spaced center portion of the winding assumes full control over the electron stream. The electric field around the grid is thus modified substantially and the characteristics of the tube, as well as its gain, change completely.

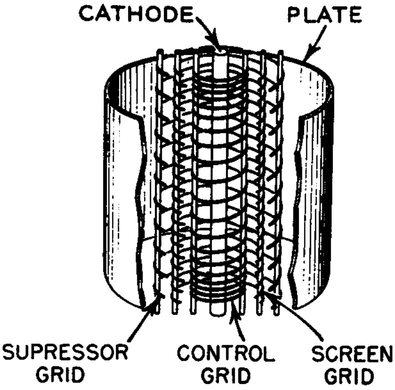

**Fig. 28.** Grid structure of a variable-mu pentode.

Of greatest significance is the change in its transfer curve as shown in Fig. 29. When the negative grid bias is small — the condition that prevails when the incoming signal is weak and the gain of the tube made high — the curves of both the variable-mu tube and its predecessor (the sharp-cutoff pentode) are quite similar, indicating equivalent performance. As the negative bias is raised, the plate current of the variable-mu tube drops much more slowly, following a very gradual curve. This slow change then provides a transfer character-

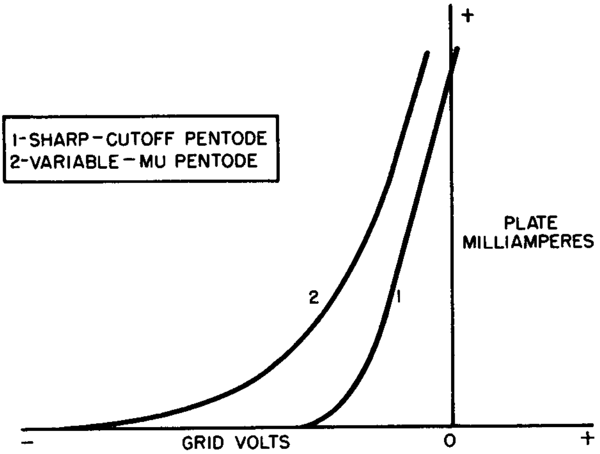

**Fig. 29.** Comparison of grid-transfer characteristic of variable-mu and sharp-cutoff pentodes.

istic in which the slope remains essentially constant for small sections of the curve. This accounts for the ability of such tubes to handle large signals without cross-modulation and modulation distortion.

Note that, while the $g_m$ of a sharp cutoff tube such as the 6SJ7 (curve 1, Fig. 29) remains constant over a wide range of plate current, that of the variable-mu type changes radically as the grid bias is varied. With recommended plate and screen voltages, the transconductance of a variable-mu tube (6SK7) for a bias of $-3$ volts is approximately 2000 μmhos. When the grid voltage is changed to about $-35$ volts, the transconductance drops to 10 μmhos. As $g_m$ is an important factor in determining tube gain, it is evident that the voltage amplification of variable-mu pentodes may be smoothly controlled simply by changing the control-grid bias. This explains why tubes in this category find so much application in automatic volume control (avc) circuits in radio receivers and automatic gain control (agc) circuits in television receivers. In these schemes, a d-c voltage whose amplitude is a function of the signal strength is fed back to a variable-mu grid to control its gain. As the signal strength rises, the feedback voltage becomes more negative and the tube gain drops; the reverse process occurs as the signal weakens. Thus, the output level of the receiver is kept approximately constant for widely different signal strengths.

In contrast with sharp-cutoff pentodes, variable-mu tubes are often called *remote-cutoff pentodes*. The name *super-control amplifier* is sometimes encountered in the literature; but in general usage, the term is rare.

## 30. Power-Amplifier Characteristics

Modern electronic equipment requiring power amplification (*e.g.* the output stages of radio and television receivers) generally uses pentodes or *beam power tubes*. For many years, however, power triodes capably handled the task of providing sufficient current and voltage to operate loudspeakers and similar reproducers.

The operating characteristics of a given power amplifier are usually categorized as class A, class $AB_1$, class $AB_2$, class B, or class C. In comparing the performance of triodes, pentodes, and beam power amplifiers (to be discussed shortly), investigating the factors given below for the various classes of operation will yield a sound evaluation of each type. We shall consider these only as applied to class-A conditions.

*Power sensitivity:* This characteristic is defined as the ratio of a-c output power in the plate circuit of the tube to the square of the peak input grid voltage. That is:

$$\text{power sensitivity} = \frac{P_o}{e_i^2} \qquad (32)$$

where $P_o$ is the power output and $e_i$ is the signal-voltage input.

In low-power equipment such as radio receivers and television sound systems, it is very advantageous to have a tube with high-power sensitivity in the output stage. Such tubes do not require large driving voltages from the preceding stage to attain full power output and so lend themselves to economical design. Triode amplifiers have low intrinsic power sensitivity while pentodes are characterized by much higher-power sensitivity. This is one of the chief advantages of the pentode over the triode in power-amplifier applications.

To illustrate the difference between a triode and pentode under typical conditions (class $A_1$), consider the data below:

Triode (2A3): $P_o = 3.5$ watts

$e_i = 30$ volts

$$\text{power sensitivity} = \frac{3.5}{900} = .0038 \text{ watt /volt}^2$$

Pentode (6K6): $P_o = 3.4$ watts

$e_i = 18$ volts

$$\text{power sensitivity} = \frac{3.4}{324} = .015 \text{ watt /volt}^2$$

*Plate power efficiency:* A measure of the ability of a tube to convert the d-c power supplied to it by the power source to a-c signal power. This factor is defined thus:

$$\text{plate power efficiency} = \frac{P_o}{E_p\ I_p} \qquad (33)$$

in which $P_o$ is a-c power output, $E_p$ is static plate voltage, and $I_p$ is static plate current under typical operating conditions. Comparing the same two tubes, we have:

Triode (2A3): $P_o = 3.5$ watts

$E_p = 250$ volts

$I_p = .060$ ampere

$$\text{plate power efficiency} = \frac{3.5}{250 \times .06} = 23\%$$

Pentode (6K6): $P_o = 3.4$ watts

$E_p = 250$ volts

$I_p = .032$ ampere

$$\text{plate power efficiency} = \frac{3.4}{250 \times .032} = 43\%$$

*Distortion*: This factor has already been discussed in detail. Distortion is generally expressed in percent; percentages of distortion above approximately 5% are considered intolerable, and every effort is made to reduce the figure to one substantially lower than this. Triodes are noted for their low inherent distortion when operated within recommended ratings while pentodes operate with somewhat higher distortion, all other things being equal. For example:

Triode (2A3):
total harmonic distortion for an output of 3.5 watts = 5.5%

Pentode (6K6):
total harmonic distortion for an output of 3.4 watts = 11.0%

*Plate resistance:* The plate resistance of triodes as a class is substantially lower than that of equivalent pentodes. For typical operating conditions, these values are given for the tubes we have been comparing:

Triode (2A3): plate resistance = 800 ohms

Pentode (6K6): plate resistance = 110,000 ohms

All other things being equal, a tube having a smaller plate resistance might be expected to have lower harmonic output content purely as a matter of the size and type of load impedance generally employed. Since audio power-output tubes work into the primary of a transformer, the impedance presented by this winding serves as the load on the tube. The triode, with its low plate resistance, is designed to work into a load of about 2500 ohms while the pentode, under the typical conditions selected, is rated for a load of 9000 ohms. Thus, the primary winding of the output transformer for the triode has far fewer turns than the pentode winding. This, in turn, means that the distributed capacitance of the load is much less in the triode case so that there is a smaller shunting effect on the high frequencies; in addition to this, the frequency response of a low impedance transformer is more easily controlled to provide a flatter curve. All of these factors contribute to the reduced harmonic distortion of triodes. We must not assume, however, that this automatically means that triodes are more widely applied as power amplifiers than pentodes. In fact, the reverse is true. The greater power sensitivity of pentodes makes large percentages of inverse feedback possible. This is a sensible advantage and often reduces the over-all distortion of a pentode amplifier *system* to something lower than that of an equivalent triode system.

## 31. Beam Power Tubes

In many ways, the beam power tube is a cross between a tetrode and a pentode amplifier. It is capable of handling high power levels in receivers, amplifiers, and transmitters. Its power-handling ability is an outcome of that part of its design which concentrates the plate-current electrons into sheets or beams of moving charges. The mechanism of beam formation is illustrated in Fig. 30.

An important feature of the construction of the beam power tube is the alignment of the windings of the control grid and the screen grid. These windings have the same pitch so that each turn of the control grid shades the corresponding turn of the screen grid. Figure 31 shows the difference in electron behavior in the pentode and beam power tube.

In the pentode, the sets of grid wires are not in alignment so that some of the electrons that pass through the control grid strike the screen-grid wires giving rise to screen current which limits the plate current of the tube. Due to the shading effect in the beam power tube, fewer electrons strike the screen grid; therefore, the relative screen current is appreciably lower and the tube is capable of handling considerably more power than the equivalent pentode without

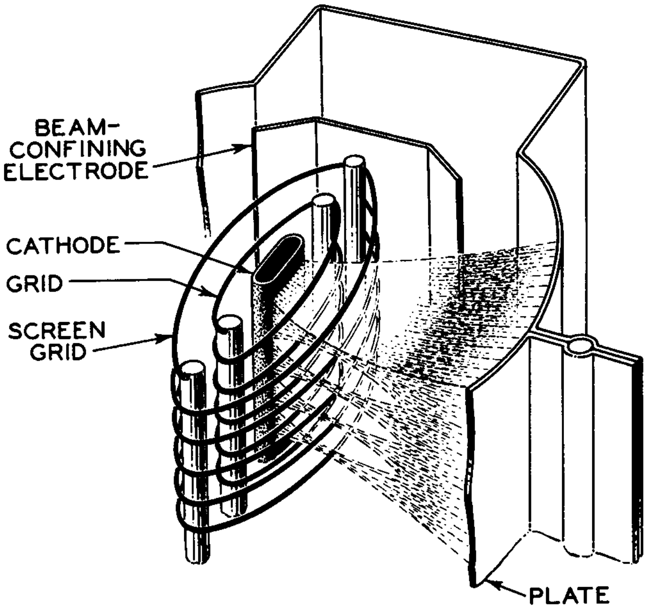

Fig. 30. Structure of a beam power tube.

overheating and with reduced distortion.

The action in the beam power tube is further assisted by the effect of the beam-forming plates. These electrodes are internally connected to the cathode and, as a rule, are at a low positive potential. As the electrons pass the highly positive screen on their way

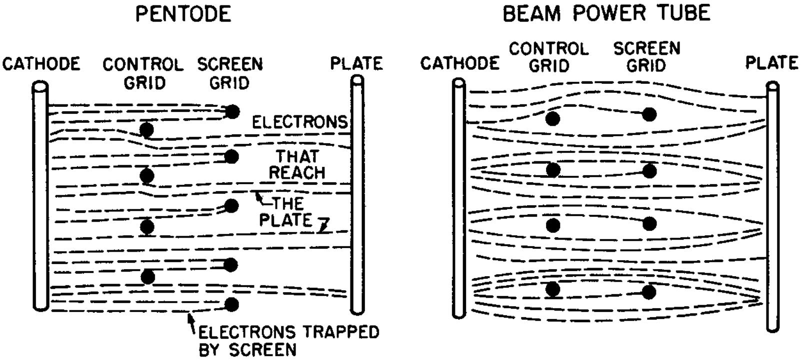

Fig. 31. Comparison of electron stream paths in pentode and beam power tube.

to an equally (or almost equally) positive plate, they are acted upon by the *relatively* negative potential of the beam-forming plates which causes them to bunch up into a high-density region between the screen grid and the plate (Fig. 30). This is an area of high negative space charge and, because of its position with relation to the other elements, serves as a virtual suppressor grid. This is the structure of a tube as the 6L6, one of the most popular audio and radio tubes of all time.

In some beam tubes, the action of the *virtual* suppressor is augmented by an *actual* suppressor (6V6, 50L6). Even though the suppressor is present in this type of tube, the shading action previously described is just as effective and the tube is still capable of handling large amounts of power.

Figure 32 indicates several important differences in the electrical behavior of beam tubes as compared with ordinary pentode power tubes. The plate current of the beam tube rises much more sharply than that of the pentode. This shows that the region in which the plate current is primarily a function of the plate voltage is much smaller in the beam tube; that is, the plate current becomes independent of the plate voltage at much lower values of plate potential. This characteristic enables the beam tube to handle much more power at lower values of plate voltage than an ordinary pentode.

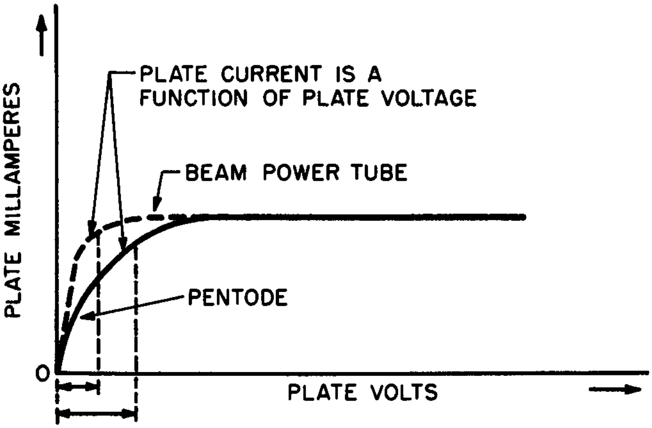

Fig. 32. Characteristic curves of pentode and beam power tube of same axes.

## Review Questions

1. What factors cause triodes to be undesirable for amplification at high frequencies?
2. What major differences exist between the circuits of a triode and a tetrode?
3. Explain what is meant by secondary emission.
4. Explain the appearance of dips in the $e_p - i_p$ characteristic curve of tetrodes.
5. Delineate the pertinent characteristics of the tetrode tube. Outline the general characteristics of the tube as well as the tetrode's plate characteristics.
6. How do the $e_p - i_p$ characteristic curves of a pentode compare with those of a triode? A tetrode?
7. Outline the pertinent characteristics of the pentode tube.
8. Explain the action of a variable-mu pentode.
9. Define "power sensitivity" as it relates to a pentode operating under class-A conditions; plate power efficiency.
10. All other things being equal, what general relationship exists in a vacuum tube between the value of tube plate resistance and harmonic output content?
11. Explain the action of a beam power tube.

## *Chapter 6*

# SPECIAL-PURPOSE TUBES

### 32. Multigrid Tubes — General Classifications

An electron tube that contains more than three grids is referred to as a multigrid tube. Additional grids are incorporated into electron tubes to alter their behavior so that they may perform some special function; such tubes are never used as simple amplifiers since three grids (control, screen, and suppressor) are all that are necessary for this purpose.

The addition of a fourth grid to a pentode converts it to a hexode or six-element type (Fig. 33). Hexodes are not catalog items since they have never been marketed in that form, having served only experimental purposes. (Special-purpose tubes, such as the 6K8, contain hexode sections.) Note that naming grids "control," "screen," etc., becomes a cumbersome process at this point. Rather than retain the functional names, it has become common to refer to the grid structures by number, starting from the cathode. For example, in

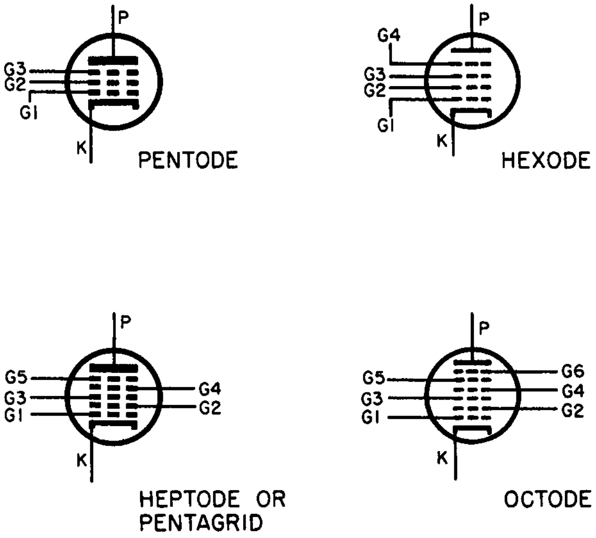

Fig. 33. Element location in multigrid tubes.

a tube having five grids, the grid closest to the cathode would be called grid 1 (G1) and the grid closest to the plate would be called grid 5 (G5).

A seven-element tube containing five grids is generally classified as a *heptode,* but is often referred to as a *pentagrid* tube. (The prefix "hept" refers to a total of seven elements; the prefix "penta" refers only to the number of grids.) Some tube types contain six grids in addition to the heater, cathode, and plate. Such units are designated *octodes.*

## 33. Pentagrid Mixer

One of the earliest pentagrid tubes to be sold commercially was the 6L7 designed as a *mixer* in superheterodyne receivers. In this tube G1 and G3 are both control grids shielded from each other and from the other elements of the tube by G2 and G4 which are internally joined (Fig. 34). The process of frequency conversion as applied in superheterodyne receivers requires that two signals of different frequencies be combined or mixed in such a way that sum and difference frequencies appear in the output circuit of the stage.

The first-order difference frequency is then amplified by one or more intermediate amplifier stages and is later demodulated to recover the audio-frequency modulation.

The pentagrid mixer performs the combining function. The incoming signal is applied to G1 which has a remote-cutoff characteristic (variable mu) that makes it suitable for automatic volume control; the output of a separate local oscillator tube is fed to G3.

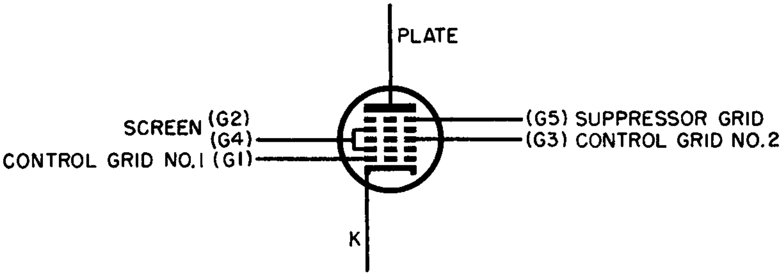

Fig. 34. The grid functions and connections in a pentagrid mixer.

This grid has a sharp-cutoff characteristic and produces a relatively large effect on the plate current for small grid-voltage variations. G2 and G4 serve the usual screen-grid function in accelerating the electron but, in addition, form an effective electrostatic shield between the two control grids, thoroughly isolating them from each other capacitively so that they function with virtually complete independence. Since the electron stream must pass through both grid structures, however, the variations in plate current are governed by the combination of the local oscillator and received signal frequencies. Mixing and the production of the intermediate frequency thus take place within the tube and the output signal in the plate load (usually the primary winding of an i-f transformer) is rich in the desired difference frequency. G5 effectively prevents the detrimental effects of secondary emission just as it does in the pentode.

## 34. Conversion Transconductance and Conversion Gain

The *conversion transconductance* ($g_c$) of a mixer tube is defined as the ratio of the plate current of *intermediate frequency* resulting from the heterodyning process to the *radio frequency* signal voltage applied to G1. Or:

$$G_c = \frac{i_p \ (\text{i-f})}{e_g \ (\text{r-f})} \qquad (34)$$

As an illustration of the use of this tube characteristic, consider the following problem:

**Problem 8.** The conversion transconductance rating of a 6L7 under typical operating conditions is 350 µmhos. What r-f signal voltage must be applied to its grid so that .035 ma of i-f signal current appears in its plate loads ?

**Solution.** Since $G_c$ is 350 µmhos and $i_p$ (i-f) is .035 ma, $e_g$ (r-f) is derived thus:

$$e_g\,(\text{r-f}) = \frac{i_p\,(\text{i-f})}{350 \times 10^{-6}}$$

$$= \frac{35 \times 10^{-6}}{350 \times 10^{-6}}$$

$$= 0.1 \text{ volt}$$

Conversion gain is the ratio of the voltage developed in the i-f circuit — generally measured at the grid of the succeeding amplifier tube — to the r-f signal voltage applied to the grid of the mixer. That is:

$$A_c = \frac{e\,(\text{i-f})}{e\,(\text{r-f})} \qquad (35)$$

Conversion gain is not strictly a tube factor. Its magnitude, like that of the gain of an ordinary amplifier, depends not only upon the tube parameters but also upon those of the accompanying circuit components. Hence, conversion gain is a characteristic of the whole circuit rather than the tube alone and so it is never specified in the tube description found in the usual handbook. In commercial receiver circuitry, conversion gains around 50 or 60 are common.

## 35. Pentagrid Converter

In contrast to the pentagrid mixer discussed in the preceding paragraph, the *pentagrid converter* contains both the mixer-amplifier and the local oscillator in the same envelope. Receivers that operate at relatively low frequencies, such as in the broadcast band, make extensive use of pentagrid converters like the 6SA7 and 6BE6 because such tubes provide an economical and efficient system for frequency conversion.

Referring to Fig. 35, the first grid after the cathode (G1) and the second grid (G2) form the grid and plate, respectively, of the oscillator portion of the assembly. These two grids together with the cathode form what is often called a *composite cathode* for the rest of the tube. That is, the composite cathode provides the remainder of the tube with an electron stream whose magnitude varies in accordance with the waveform applied to the first grid (G1) by the oscillator action.

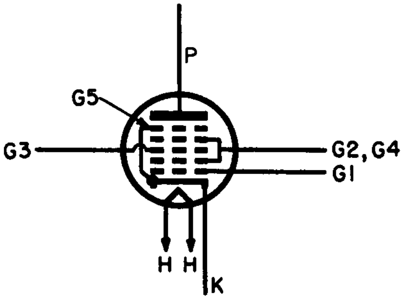

**Fig. 35. Relative element positions in a typical pentagrid converter.**

The varying electron stream from the composite cathode is also controlled by the r-f voltage applied to grid three (G3) by the incoming radio signal. (See Fig. 36.) The output voltage that appears across the plate load is, therefore, a mixture of the local oscillator frequency and the incoming r-f and contains the sum and difference frequencies as well as the original ones. The plate load – usually a resonant circuit – provides a high-impedance path for the desired difference or i-f, hence this frequency develops a large voltage across the load; it is then amplified in the succeeding stage by the usual methods. Note that G2 is internally connected to G4 and that both grids are at a-c ground potential due to the presence of capacitor C in the circuit. This suggests that the G2 – G4 combination behaves as a screen grid, serving to isolate the signal grid (G3) capacitively from the rest of the elements; thus the combination limits the action of the grid to one of electron-stream modulation. The suppressor grid (G5) functions in the usual manner.

Converter tubes of the 6SA7 and 6BE6 variety are designed with a view to minimizing the effect that the signal grid (G3) exercises on the space charge around the cathode. This isolation applies equally to a-c or d-c potentials applied to the signal grid. The net effect of this virtually total shielding is to reduce the undesirable coupling

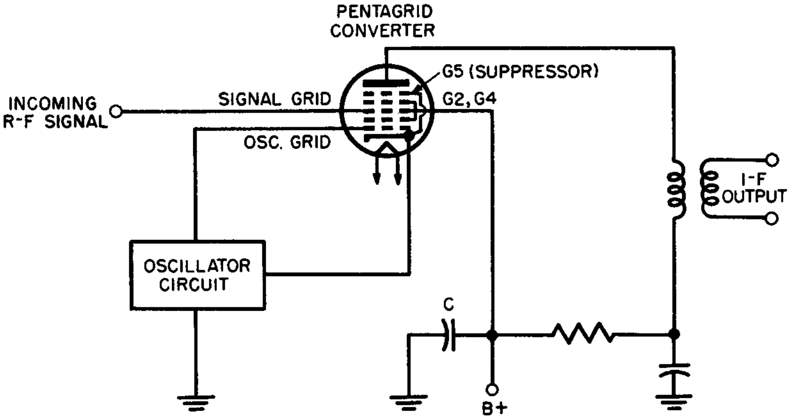

**Fig. 36. Block circuit of pentagrid converter stage.**

that sometimes exists between the oscillator grid and signal grid, particularly at the higher radio frequencies, and to make the tuning of the oscillator section independent of the avc bias voltage that appears on G3. It follows that normal changes of voltage on G3 have little effect upon the transconductance of the oscillator section or the input capacitance of G1 since both of these factors must remain constant for frequency-stable oscillator action.

Figure 37 shows the operation-characteristics for a pentagrid converter (6SA7). It illustrates the relationship between various values of G1 current (oscillator grid) and the conversion transconductance. In the equation:

$$P\ (\%) = \frac{E_k}{E_k + E_g} \times 100 \qquad (36)$$

$E_k$ is the voltage between the cathode and ground across the oscillator coil and $E_g$ is the oscillator voltage between the cathode and G1. P refers to the oscillator grid drive as compared to the oscillator output. As the oscillator grid voltage (r-f) rises, P decreases as the equation shows; at the same time conversion transconductance rises. Thus, the condition required for high-conversion transconductance must be met not only by tube design, but also by the design of the oscillator coil and its accompanying circuit. The typical conversion transconductance for this tube is about 450 μmhos.

In designing an oscillator coil for a pentagrid converter, the basic objective is the attainment of maximum conversion gain from

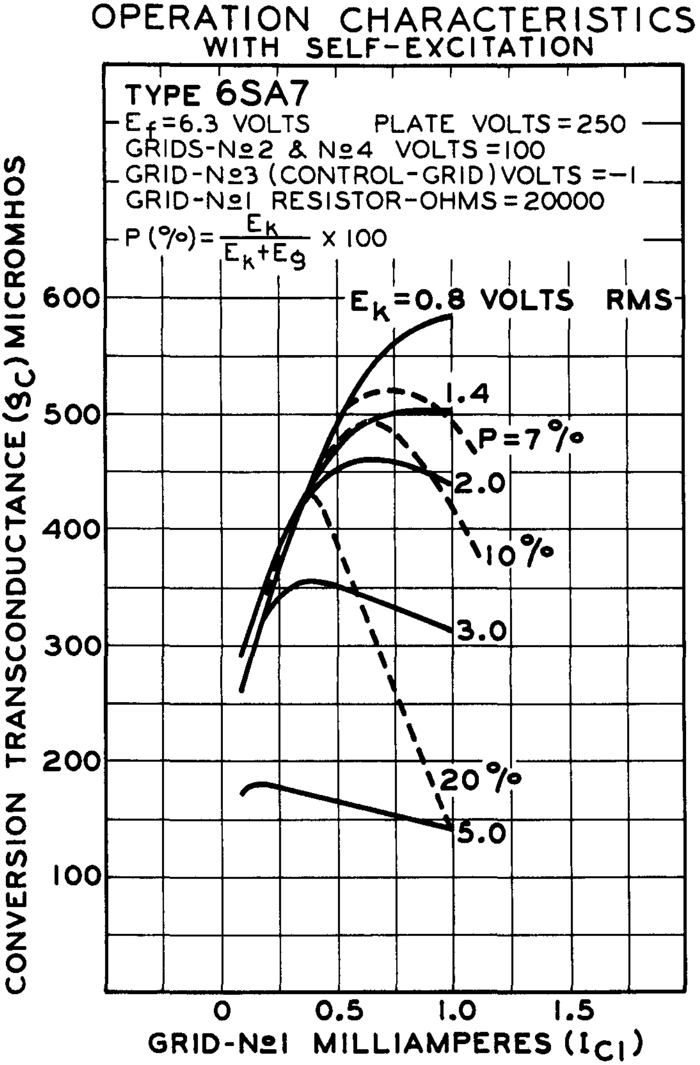

Fig. 37. Graphical analysis of the operation characteristics of the 6SA7 with self-excitation.

the tube. The 6SA7 self-excited operation characteristics curves shows that conversion transconductance is a function of oscillator grid current, converter cathode voltage, *and* the position of the tap on the oscillator coil (or if a two-winding coil is used, the turns ratio and coupling coefficient of the respective winding). A further necessary condition is that maximum conversion gain should *not* be obtained at the expense of oscillator reliability over the entire band for which the receiver is designed.

For the 6SA7, the manufacturer tells us that the conversion transconductance for reliable operation is about 450 micromhos. He states further that this condition can be achieved (and this is more or less empirical) by adjusting the cathode voltage ($E_k$) to about 2 volts peak and the oscillator grid current to about 0.5 ma for the low- and medium-frequency bands. He thus fixes the transconductance, the grid resistor (20,000 ohms), the grid current, and the cathode voltage.

However, cathode voltage and grid current are both dependent upon *oscillator drive,* and in order to obtain the drive required to bring about the stipulated conditions, the coil tap or turns ratio of the coil must be correct.

This is where the P (%) equation enters. The tap must be selected at such a point as to make the drive fit the rest of the requirements. An example will make the meaning of P clear and also show the value of the equation to the designer: Suppose we decide that our converter is to run at 0.5 ma grid current and is to have a transconductance of 475 micromhos. Using the curve, we find that the 0.5 ma ordinate intersects the 475 micromho abscissa right on the P = 10% curve. This tells us that P, which is nothing more than the ratio of cathode voltage to total coil voltage, must be 10%, so that we have:

$$0.10 = \frac{2}{2 + E_g}$$

Solving for $E_g$

$$E_g = 18 \text{ volts}$$

Thus, to obtain the conditions required for this specific operation characteristic, the coil tap (or turns ratio) must be so adjusted that $E_g$ is 18 volts when the cathode voltage is 2 volts.

From this point of view, the equation is nothing more than a definition of conditions to be fulfilled in order to meet the requirements set up by the other circuit requirements. It (P) may be called, as above, the ratio of cathode voltage to total coil voltage developed in the self-excited oscillation circuit of the converter.

## 36. Triode-Hexode Converter

This converter, as typified by the 6K8, differs in construction from the pentagrid converter in that two tubes are contained in one envelope: a triode oscillator section and a tetrode mixer stage. The triode control grid is connected internally to the first grid, G1, of the hexode section (Fig. 38). The tube contains internal shields that are connected directly to the shell so that the field which surrounds them serves as a secondary emission suppressor.

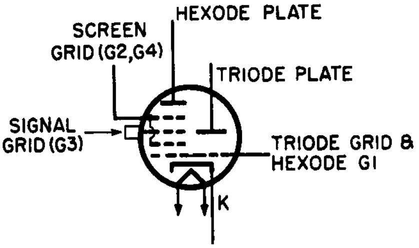

Fig. 38. Element location and interconnection in the triode-hexode converter.

The action of the triode-hexode in converting an r-f input signal to an i-f signal is based upon effects similar to those encountered in the pentagrid converter using a separate external oscillator. The triode section of the triode-hexode generates the local frequency which is automatically impressed upon the mixer grid (G1) through the internal connection. The incoming r-f signal is applied to G3 of the hexode unit where it is mixed with the electron stream that has already been modulated by the local oscillator voltage on G1. Because this tube is not critically affected by changes in plate voltage or signal grid bias, it has seen much use in all-wave broadcast receivers.

## 37. Multipurpose Tubes

A discussion of special-purpose tubes would be incomplete without some mention of multiunit or multipurpose tubes. A multipurpose tube contains two or more distinct tube structures in the same envelope thereby improving economy, compactness, and often operative effectiveness. The rate at which new tube-types appear each year defeats any attempt to describe all the current ones; however, a number of particularly popular multiunit tubes have survived encroaching obsolescence. These are listed below:

*Duo-diode-triode*: Contains two diodes and one triode in a common envelope; used as a diode detector, avc diode, and audio amplifier; typical numbers are 6AV6, 6SQ7, 6AT6.

*Diode-beam power*: Used as a power rectifier and audio output tube; typical numbers 50L6, 117L7.

*Duo-triode*: Used as push-pull amplifiers, two amplifiers in cascade, multivibrators. Typical numbers are 6SN7, 6J6, 12AU7.

*Duo-diode*: Large sizes are very common as full-wave rectfiers; small sizes are used as f-m detectors, phase comparators in television, and combination detector-avc tubes. Typical large duo-diodes are the 5Y3 and 5V4; small duo-diodes are 6AL5 and 6H6.

## 38. Tuning-Indicator Tubes

Tuning-indicator tubes are enjoying increasing use in f-m tuners and high-fidelity combination equipment. First produced many years ago, these tubes are being applied with renewed enthusiasm in many devices which are improved by their performance.

Essentially, an *electron-ray tube* (tuning indicator, tuning eye, etc.) consists of a triode voltage amplifier directly coupled to a fluorescent-type visual voltage indicator (Fig. 39).

The physical construction is illustrated in Fig. 39A and the standard schematic symbol for the tube in Fig. 39B. The operation of the tube may be described as follows:

With the heater energized (6.3 volts for types 6U5 and 6E5) the cathode emits electrons in all directions. A portion of the cathode projects above the cup-shaped target electrode and when the latter ($T_A$ in the schematic) is positively charged, the emitted electrons strike all portions of the inside of the cup with approximately equal energy. The fluorescent coating then glows evenly presenting a uniformly glowing green disc to the viewer looking down at the top. When a d-c voltage (positive) is applied to the grid of the triode ($G_t$), the plate current of the triode increases, causing P to become more negative than before. Since P is directly coupled to the control electrode, the latter also becomes more negative than previously.

The control electrode is a rod-shaped structure that projects into the cup-like target alongside the cathode. As the control electrode becomes more negative, electrons emitted from the cathode are repelled from the general area so that they cannot reach the fluorescent coating on the target. Thus, the control electrode casts a shadow whose area is dependent upon the value of the negative voltage applied to it by triode action. When the potential of the triode grid changes in a negative direction, the target voltage changes in a positive direction and the shadow angle narrows.

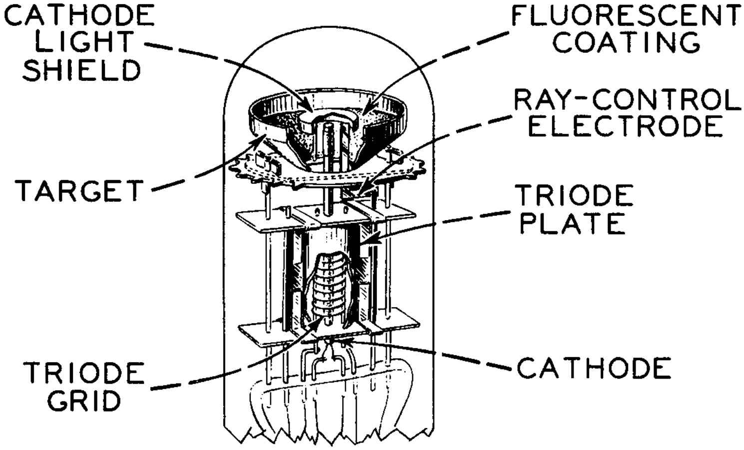

Fig. 39. Electron-ray tube (tuning indicator).

In f-m receivers, avc voltage is used as the controlling potential. When the receiver is set for optimum tuning on a given signal, the signal strength is greatest, hence the avc voltage is maximum in a negative direction. When this voltage is applied to the triode grid, the shadow angle narrows; thus, best tuning is indicated by the narrowest shadow angle in this application.

The two common types of electron-ray tubes are the 6E5 and the 6U5. Both require six-contact sockets and offer identical performance in all details except one: the voltage applied to the triode grid in the 6E5 must be −6.5 volts (anode supply = 200 volts) to cause the shadow to narrow to 0°, whereas in the instance of the 6U5 a triode grid voltage of −18.5 volts is required for the same effect. Thus, the type selected for a specific use would depend upon the magnitude of the avc voltage normally obtained in reception.

## 39. Transmitting-Tube Considerations

Transmitting tubes differ from receiving tubes in design rather than principle. The most important single consideration in the construction of transmitting tubes is that of heat dissipation, since these tubes are called upon to handle large amounts of power. Conversion of energy from one form to another is never 100% efficient and the losses undergone in the process almost always appear in the form of heat in the tube elements. Unlike receiving tubes, transmitting types are almost always operated with substantial grid currents as well as plate currents making it necessary to arrange for heat removal from all the elements.

The elaborateness of the method used for heat removal in a given case depends upon the amount of power being dissipated. Table V provides an approximate classification of some currently popular methods of heat dissipation.

### TABLE V

### METHODS OF HEAT DISSIPATION

| Maximum Plate Dissipation | Method |
|---|---|
| 200 watts | Natural air circulating around the tube envelope. |
| 200 watts to 4000 watts | Forced-air cooling on fin radiators attached to the tube envelope. Blowers and fans are used to provide the necessary fast circulation. |
| 4000 watts and above | Water cooling. In some tubes, natural convection currents are used. As the power increases, water circulators are used to increase the rate of flow. In the very high powered series, the grids are constructed with internal tubing in which water is circulated by pump action. |

## 40. Transmitting-Tube Cathodes

High-power output can be obtained only by utilizing high-voltage- and high-current circuits in the transmitting system. The vacuum-tube amplifier that feeds the transmitter antenna must be able to survive continuous punishment in the form of high-speed electron impact and, often, bombardment by massive ions.

For a long time tungsten* in its pure form was used as the cathode material in transmitter tubes because it is not seriously affected by ionic bombardment due to the presence of residual gas. This material does not have a high emissivity, however, and has been supplanted almost universally by *thoriated-tungsten* emitters.

At one time, oxide-coated cathodes found application only in low-voltage receiving tubes, but recently improved fabrication techniques have made its use possible in tubes rated up to several hundred watts dissipation. Even in the modern tubes where evacuation is very nearly perfect, any attempt to force it beyond this point results in the rapid disintegration of the coating due to ionic bombardment.

The thoriated-tungsten cathodes in very large transmitter tubes are toughened by a process known as *carburization.* Thorium oxide is added to the tungsten in the usual manner, but while the cathode is being heated it is exposed to the action of carbon in the form of a vapor. The carbon penetrates the surface of the tungsten, forming a very tough layer of tungsten carbide while the metallic thorium slowly diffuses to the surface of the layer. Carburized filaments may then be woven into filament "ropes" to form multistrand thoriated-carburized-tungsten cathodes which are used in the highest-power transmitter tubes.

Satisfactory performance can be obtained from thoriated-tungsten cathodes only when they are operated within 5% of their rated temperature. The thorium quickly boils off at higher temperatures. Athough a cathode like this can be reactivated,† it is an annoying

---

* Tungsten is now officially recognized by a new name: *wolfram.*

† In reactivating a thoriated-tungsten filament, normal filament voltage is applied for several hours. Then for 10 minutes the filament voltage is run at 30% above the normal filament voltage and subsequently reduced to normal for approximately 20 minutes.

and time-consuming process. Inadequate emission is obtained at temperatures below the tolerance rating of 5%.

### 41. Transmitting-Tube Anodes

Most of the heat losses in a transmitting tube take place at the plate. The temperature developed is a function of the physical properties of the metal used in forming the plate. Some metals are able to radiate heat better than others and are given a higher *thermal emissivity rating.* Of all the common anode materials, pure graphite has the highest thermal emissivity, followed in order by roughened molybdenum, tungsten, and tantalum. Graphite has one disadvantage, however: it collects adsorbed gas which may later be released into the tube should its temperature rise above the safety point even for a short time.

Other factors to be considered in selecting anode materials for high-power transmitting tubes are mechanical strength at high temperatures, ease of shaping and fabrication, resistance to vibration, and cost. Most of these militate against the use of graphite: it is fragile, cannot withstand vibration, and is very difficult to fabricate. The currently emerging pattern in modern transmitter tube anode selection is given in Table VI:

### 42. Other Special Features of Transmitting Tubes

As mentioned in a previous section, the heat developed at the grid of a high-power transmitting tube may be very substantial because these tubes are normally operated with the grid positive during some portion of the input cycle. A positive grid attracts electrons which, after impact on the grid material, pass into ground through the grid-load impedance. The resulting increase of temperature of the grid structure sometimes necessitates special dissipative measures such as the use of a coolant circulating through the grid tubing.

In addition, the material used for the grid coils must have a high melting point; hence the popularity of molybdenum, tantalum, and tungsten for this application.

When the grid voltage is highly positive, the kinetic energy of the electrons collected by it may be great enough to cause secondary emission. The flow of secondary emission current through the grid circuit impedance may then produce a greater voltage drop causing

## TABLE VI

## SELECTION OF ANODE MATERIALS

| Power | Anode Material | Reasons |
|---|---|---|
| Low Power | Nickel | Cheap, easy to work, stable and mechanically strong at low temperatures. Its loss of strength at high temperatures and its high vapor pressure (tendency to vaporize) make it unsuited for use in high power tubes. |
| Medium power, radiation cooled | Graphite | Cheap, good thermal emissivity, but is difficult to fabricate. Tends to exude gas when at red heat. |
| Medium power, forced-air cooling | Molybdenum | When roughened, has very high emissivity but is much better mechanically than graphite, is easier to shape. Has a lower melting point than graphite and cannot be used at higher power. |
| High power (several thousand watts) | Tantalum | Easy to shape, good thermal emissivity, mechanically strong at high temperature, and absorbs rather than releases gases when red hot. This makes a sustained high vacuum possible so that tantalum is being more widely used than ever. |
| High power (up to 5000 watts) | Tungsten (Wolfram) | Limited application in tubes where anode-material high-temperature stability is important. |
| Very high power (water-cooling) | Copper | Best heat conductor among common metals. Very workable and lends itself well to large anode structures. Since it is used below the boiling point of water, its high vapor pressure does not cause serious complications. |

the grid potential to become even more positive so that increasing numbers of electrons are trapped by it. This produces greater secondary emission, a still larger voltage drop in the grid impedance, and an intensification of the grid heating. Unless corrected, this runaway condition may quickly destroy the tube.

Secondary emission from the grid is often encouraged in tubes having oxide-coated or thoriated-tungsten cathodes because the surface material of these cathodes tends to vaporize and sublime on the grid wires, making them better emitters. This is generally avoided by plating the grid with an inactive metal like gold. Materials of this type do not readily combine chemically with oxides or thorium, hence they are quite effective in reducing this type of secondary emission.

The high temperatures and high voltages encountered in transmitter-tube applications give rise to other problems that do not appear in low-voltage low-power systems. The envelopes used in medium- and high-power tubes are usually of glass having a higher melting point, better mechanical properties, and better electrical insulating properties than that found in receiving tubes. The transmitting-tube base also requires special attention since ordinary phenolics like *bakelite* cannot withstand these voltages and temperatures. The basing problem is handled in three ways:

(1) Medium-power transmitting tubes utilize ceramic materials such as *steatite* and *isolantite* and are sometimes metal-clad.
(2) Higher-power tubes do not use bases at all, having their element connections come through a metal-to-glass seal directly.
(3) Very high-power tubes are generally fabricated of a complex structure involving both metal and glass with connections made to heavy rods that form a part of each of the electrodes.

## Review Questions

1. What is the difference between a multigrid and a multiunit tube?
2. What general designation is utilized for a seven-element tube containing five grids?
3. Show by a diagram the grid functions and connections in a pentagrid mixer.
4. Define the conversion transconductance of a mixer tube; the conversion gain.
5. Diagram the relative element positions in a typical pentagrid converter. Enumerate the function of each of the elements you have drawn.
6. How do the element locations and interconnections of the triode-hexode converter differ from those of the pentagrid converter?

7. Prepare a table classifying the heat dissipation methods in current use for transmitting tubes.
8. Repeat the procedure of Question 7 for modern transmitter-tube anode selections.
9. Explain the need for special attention to tube-basing requirements in transmitting tubes.
10. What is a thoriated-tungsten cathode? List its advantages and disadvantages.

# INDEX