Handbook of
INDUSTRIAL ELECTRONIC CIRCUITS

By JOHN MARKUS and VIN ZELUFF

ASSOCIATE EDITORS OF "ELECTRONICS"

FIRST EDITION

NEW YORK TORONTO LONDON 1948
McGRAW-HILL BOOK COMPANY, INC.

HANDBOOK OF INDUSTRIAL ELECTRONIC CIRCUITS

PREFACE

THE purpose of this handbook is to provide a busy engineer with a ready source of information about the circuits he needs for a particular industrial electronic application. The significant work of other engineers here has been collected in one handy reference volume to save hours and even days of searching through technical literature. By starting a problem where others left off rather than from scratch, the need for laboratory research and experimentation can be reduced to a minimum.

Though primarily intended for reference, the book can be used for study at home. It can also serve as a new tool for instructors in vocational schools and colleges who want to emphasize practical electronic circuits in preference to abstract theory, or as a supplement for basic theory.

Since most of the circuits discussed were developed during the war years, when research and practical development in the electronic field were at an all-time high, engineers in other countries should find this handbook a valuable replacement for publications having limited distribution during those years and no longer available.

The circuits are logically grouped in chapters according to function. Within each chapter circuits usually progress from the simplest to the more complicated arrangements.

Any desired type of circuit can usually be found merely by glancing at the chapter headings in the table of contents. Supplementing this is a detailed back-of-the-book index, in which each circuit is cross-indexed many times to permit the location of specific circuits quickly when they are known by a variety of names.

To compile this material, all pertinent magazines were searched page by page, right through the back-of-the-book departments, where some of the choicest gems of circuitry are to be found. As a result, some four hundred and forty circuits were assembled for processing. Each circuit was carefully checked, simplified where desirable, and redrawn where necessary to incorporate approved electronic symbols established by the American Standards Association.

Values of all important components are given since these values aid an engineer in reading a circuit and redesigning it for his own uses. With values for one set of operating conditions as a starting point, it becomes much easier to convert the theoretical circuit to practice.

Included with each circuit is a concise description, giving the general nature of the circuit, its performance characteristics, a detailed explanation of how it works, practical data on critical components, and suggested applications.

Following each circuit description is a reference to the original source, where the engineer may obtain more details on related mechanical problems or graphs of performance characteristics.

Over four hundred of these references are from *Electronics;* to this publication, then, and particularly to its authors and editors should go full credit for rendering such a practical contribution to the advancement of the industrial electronic field. Specific mention should be made of Keith Henney, former editor; Don Fink, his successor; and Bill MacDonald, who, as managing editor, contributed in no small measure to the quality and number of industrial electronic articles in the magazine.

Equally valuable articles were found in other publications, for which appreciation is also expressed here. It is hoped that much more space will be given to the circuitry of industrial electronics in the future in view of its increasing importance and the tremendous role it played in production during the war years. The subject deserves greater attention in the future because electronic mechanization is one promising way of making more goods better and cheaper while continuing to increase the rewards for labor and enterprise in industry.

JOHN MARKUS
VIN ZELUFF

NEW YORK, N. Y.
June, 1948

CONTENTS

AUDIO-FREQUENCY CIRCUITS

High-fidelity Amplifier with No Phase Distortion up to 30,000 Cycles

ELIMINATION of cathode and screen bypass capacitors, decoupling capacitors, and the filter output capacitor result here in an amplifier that can cover all frequencies between 10 and 30,000 cycles with no phase distortion that is perceptible on a cathode-ray oscilloscope.

Use of a filter output capacitor is avoided by means of a type 6A6 connected as a filter. A positive pulse of ripple voltage coming in through the 10-henry choke is applied to the grid of the 6A6 through the 1-μf capacitor. As a result, plate current through the 6A6 increases and the IR drops across the 200-ohm plate resistor and the 60-ohm cathode resistor increase. The increase in these IR drops is just equal to the pulse of ripple voltage; hence the ripple voltage is canceled at the output terminals of the power supply. In this way, the 6A6 smooths out ripple or voltage surges from the line but does not introduce phase distortion as a filter capacitor would.

The use of screen bypass and decoupling capacitors is avoided by the use of neon tubes and an 874 tube. These tubes act as voltage regulators and therefore perform, with negligible phase distortion, the same function as bypass capacitors.

The use of cathode bypass capacitors is avoided by designing the amplifier stages so these can be omitted without much loss of gain. In the first and third stages, the cathode bias resistors are small resistances, and there is not much degeneration. The second stage, a phase inverter, is operated at unity gain; degenerative loss of gain in this stage is therefore not a disadvantage.

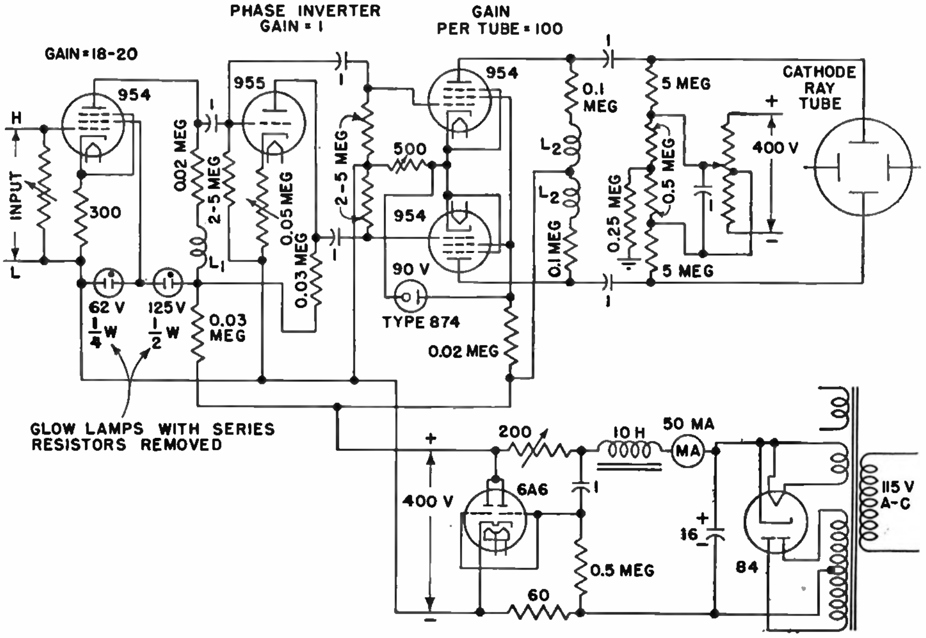

The acorn tubes used combine large mutual conductance with small interelectrode capacitances. They therefore can provide high gain with little phase distortion. The little phase distortion that is produced by the output capacitance of these tubes is made still smaller by using chokes in series with the plate resistors to cause a phase shift in the opposite direction to the shift caused by the output capacitance of the tubes. Large capacitance values, 1 μf, for the coupling capacitors, also contribute to the low phase distortion.

O. H. Schade, An Amplifier without Phase Distortion, *Electronics*, June, 1937, p. 26.

Preamplifier-filter Circuit for Crystal Pickup of Phono Amplifier

THE preamplifier-filter circuit illustrated permits the playing of orthoacoustic transcriptions, constant-velocity transcriptions, and ordinary phonograph records by means of a relatively inexpensive and readily available crystal pickup. Circuit constants shown are for use between an Astatic HP36 pickup (LP23 head) and a 500-ohm load. The three switches are ganged. T is a Western Electric 127C output transformer.

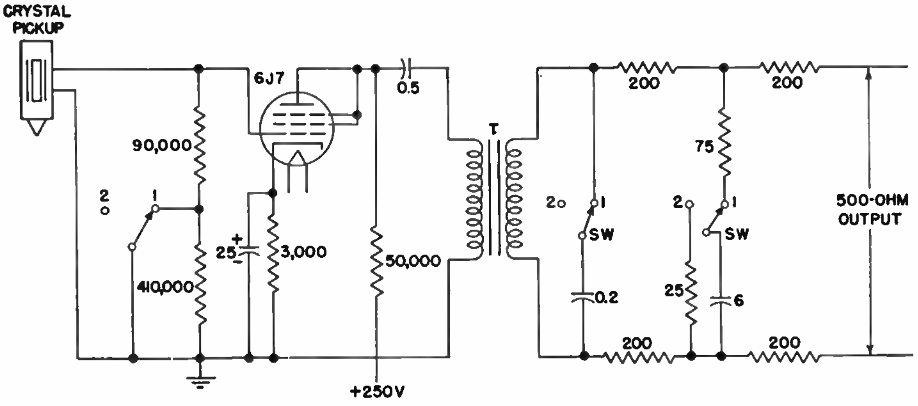

Switch position 1 is used when playing orthoacoustic transcriptions that require bass preemphasis and treble deemphasis, in accordance with a standard curve furnished by the manufacturer. It was found impossible to equalize in the amplifier grid circuit; therefore only partial compensation is made there by means of the 90,000-ohm resistor.

Additional equalization is provided by the 0.2-μf capacitor, which gives high-frequency compensation, and the 6-μf capacitor, which governs the low-frequency boost.

To play ordinary phonograph records or constant-velocity transcriptions, the switch is placed in position 2. This places 500,000 ohms in the preamplifier grid circuit and converts the network on the 500-ohm side of the transformer into a regular 20-db H pad.

Output volume level is approximately -30 db for switch position 1 and -25 db for position 2.

Charles Affelder, Preamplifier-filter for Crystal Pick-up, *Electronics*, April, 1942, p. 78.

Hearing-aid Amplifier with Self-compensating Circuits

THE vacuum-tube hearing-aid amplifier described here is a three-tube high-gain amplifier to allow for inverse feedback and losser methods of time correction. Self-bias is achieved without use of a coupling capacitor across R_1.

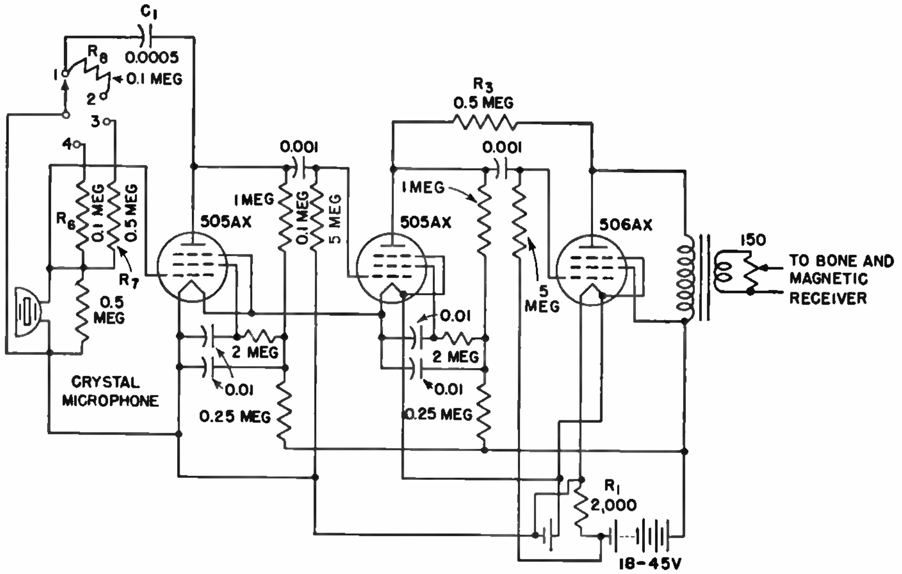

As the battery voltage drops from 45 volts, the voltage drop across R_1 decreases, decreasing the bias on the grid of the output tube and regulating the total current flow. As a consequence, longer battery life is possible. Constant-current inverse feedback is a by-product of this type of self-bias. It reduces harmonic distortion but makes necessary a higher gain circuit. This type of inverse feedback also causes the plate impedance to rise, producing frequency distortion because the secondary load also varies in its impedance.

Compensation for the disadvantages of constant-current inverse feedback is obtained with constant-voltage inverse feedback (R_3), which permits use of a volume control to vary the secondary load of the output transformer.

Filter networks prevent circuit oscillation due to dropping battery voltage and the resultant development of internal resistance in the battery. They accomplish this by preventing the internal resistance from acting as a coupling medium between stages.

Position 1 of the tone corrector connects a capacitor across the first stage, attenuating the high frequencies. This makes the magnetic receiver low in pitch and the bone conductor extremely low-pitched.

Position 2 flattens the peaks in the magnetic receiver and raises the low pitch of the bone conductor slightly by adding R_8 in series with C_1.

Position 3 connects R_7 in parallel with the resistor loading the crystal microphone, in order to decrease the load and to attenuate the low frequencies. This flattens the response of the bone conductor and causes the magnetic receiver to be high-pitched.

Position 4 introduces R_6 into the circuit. This resistor is of lower value than R_7 and accentuates the results achieved in position 3. Therefore, it results in a high-pitched bone conductor and an even more highly pitched magnetic receiver.

Ira Kamen, Hearing Aid Design, *Electronics*, July, 1942, p. 32.

Simple Two-tube Intercommunicator for Master and Two Remote Stations

THE amplifier circuit shown was developed to provide two-way communication between a diver's tender station on the surface of the water and either one or two divers underwater. Only voice coil circuits go to the divers by means of waterproof cables. Plate-supply power can be obtained from a vibrator power supply, batteries, or a conventional a-c power pack.

Loudspeakers serve both in their normal capacity and as microphones. The system is normally set up for transmission of speech from all connected divers to the tender. Switching facilities are provided on the control panel so it is possible to select and talk to any one diver from the surface station. Volume control is also provided to make more intelligible the speech as picked up under varying pressure conditions.

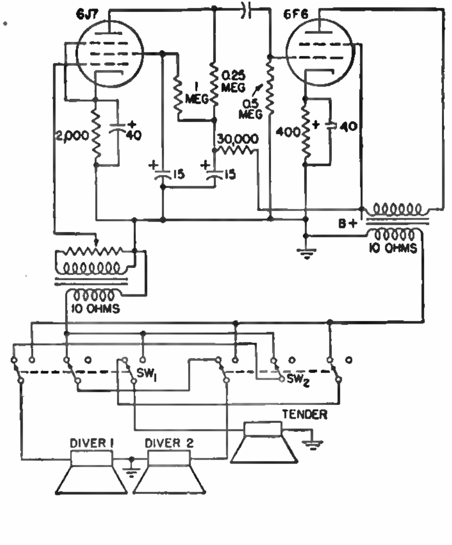

The divers' reproducers, which are mounted in the diving helmets, consist of small permanent-magnet driver units with a suitable mounting bracket and protective grille. These speakers have an impregnated fiber cone.

The amplifier is a resistance-capacitance coupled circuit using a 6J7 as a voltage amplifier coupled to a 6F6 in the output stage.

D. W. Gellerup, Diving Amplifier, *Electronics*, September, 1943, p. 170.

Automatic A-F Amplifier for Telephone Lines or Power Poles

WHERE noise is very high on long-distance interoffice telephone lines carried on high-voltage power-line structures, this amplifier circuit serves admirably for raising transmitted signal level above the noise.

When the handset is removed from the hook, the battery circuit is completed through induction coil T_6, transformer T_1, relay SW_1, and the transmitter. This relay operates on the transmitter button current, and its contacts complete a 110-volt a-c circuit through the coil of relay SW_2, which has a five-pole double-throw contact arrangement. When SW_2 operates, it puts the transmitter-amplifier output on the line, short-circuits the primary of the induction coil, removes a short circuit from the primary of T_1, connects the telephone receiver to the receiver-amplifier output, and grounds the center tap of the power-transformer high-voltage winding. The amplifier is now in operation. If there had been a failure of the 110-volt supply, SW_2 would have left the telephone handset connected into a conventional local battery side-tone circuit. In this way communication would be maintained, even if at reduced efficiency.

With the amplifier in operation, the signal coming from the transmitter is applied to the primary of T_1. This has a 50-ohm primary and a high-impedance secondary. R_1 is a dual gain control ahead of all the tube grids. Each section of R_1 feeds straight into the first push-pull stage, but the grids of the other stage are electrically crossed to get a 180-degree phase shift. The plates of both stages are connected through the 50,000-ohm resistors and 20,000-ohm potentiometers. The combined plate circuits represent a bridge circuit that can be balanced with the potentiometers. The arms of the potentiometers feed through coupling capacitors C_3 and the dual gain control to the 6N7G grids. The output of the 6N7G goes to the telephone receiver.

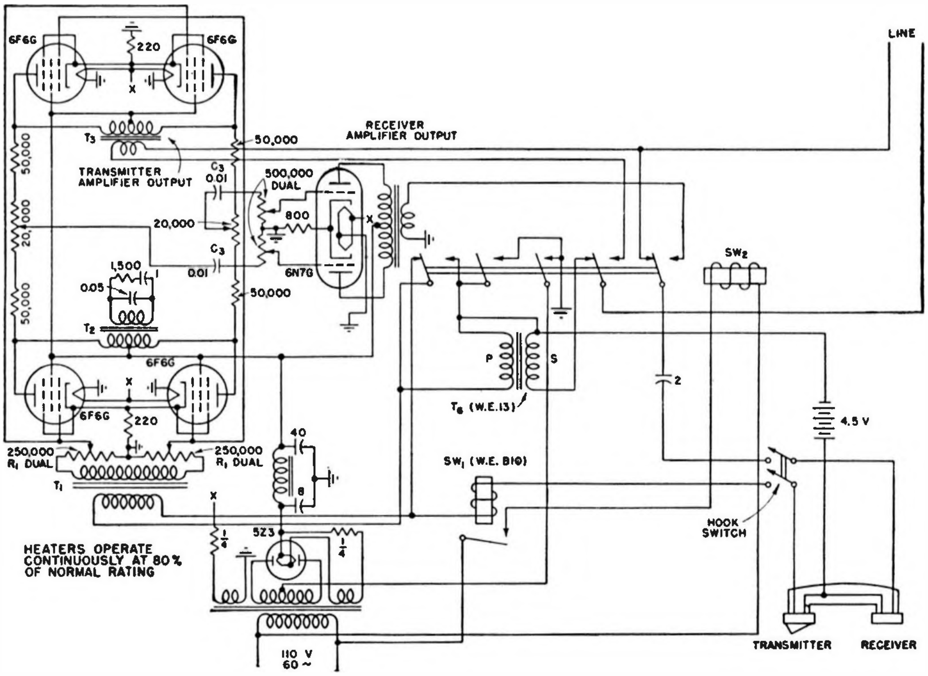

The output of one of the 6F6G push-pull stages goes into the line through T_3, and the other feeds into a network which has characteristics which are approximately the same as those of the line through T_2. The network is used to load the two stages alike as nearly as possible at all frequencies. The network, to be most effective, should also duplicate any prominent line irregularities as closely as possible. When the bridge is balanced, a voltage appearing on the 6F6G grids does not appear across the 6N7G grids, but it does appear on the line. In other words, there is no side tone in the receiver. However, when a signal voltage from a distant telephone comes into the amplifier, it appears across one end of the bridge only, so that it is unbalanced. Such a signal is amplified through the 6N7G and fed to the receiver.

W. H. Blankmeyer, Telephone Amplifier for Power Company Circuits, *Electronics*, April, 1942, p. 78.

Constant-gain Audio Amplifier for Obtaining Knock Pickup Patterns

CATHODE-FOLLOWER input, a special feedback circuit, and a simplified phase-inverter stage provide flat frequency response from 8 to 20,000 cycles with a gain of 160,000 for portrayal of knock patterns of internal-combustion engines on a cathode-ray oscilloscope, using a piezoelectric pickup. The gain is constant over a wide range of frequencies, independent of line voltage, and there is sufficient voltage output to drive a 5-inch cathode-ray tube.

The input section of the amplifier is a cathode-follower tube, which is an impedance transformer. In reproducing cylinder pressures, good fidelity demands a long time constant for the input circuit. Under operation at reduced plate and filament voltages, the cathode follower has an input resistance of at least 50 megohms; moreover, it has reasonably constant gain under line-voltage variation.

The wide range of frequencies covered by the combined knock and pressure waves makes it necessary to have an over-all frequency response of from 8 to 20,000 cycles per second, flat to within 10 per cent. Resistance-capacitance coupled amplifiers are used for the two amplifying sections. To obtain constant gain and to aid the frequency response, plate-to-cathode negative feedback is employed in the first amplifying section (two 6SJ7 tubes) and in the second amplifying section (a 6SJ7 tube and a 6V6 tube). The amplifier gain is controlled by changing the amount of feedback in these sections by means of five-position switches to give the following 10 different gains:

Switch position	*Gain*	
	Section 1	*Section 2*
1	10	200
2	25	240
3	60	300
4	150	350
5	400	400

In the above table, the gain of the cathode-follower tube is included in Sec. 1, and the gain of the inverter tube is included in Sec. 2. The values of the five resistors connected to each step switch are chosen to give the specified section gains.

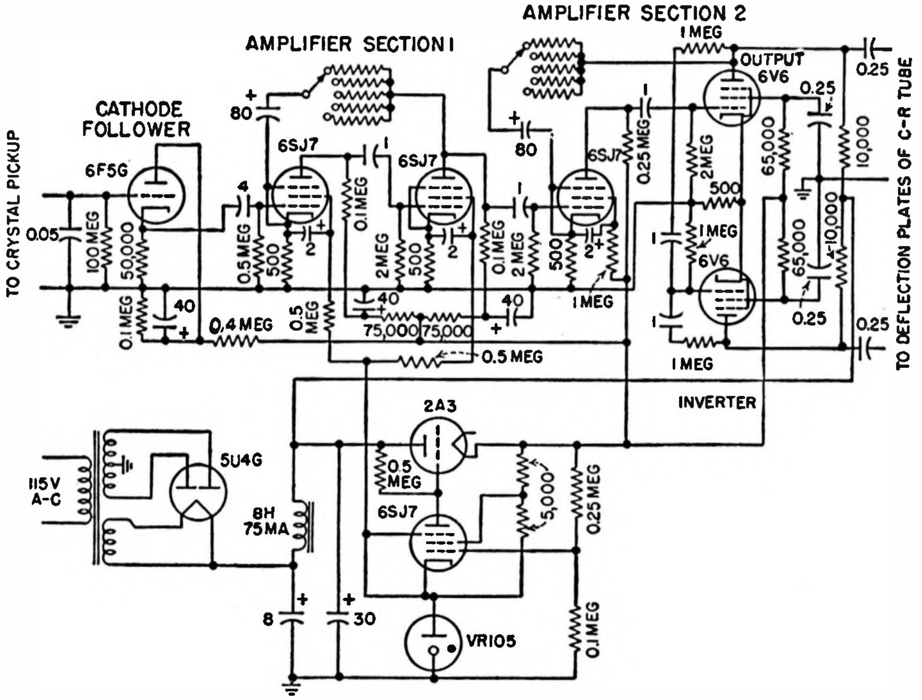

The over-all gain, which is the product of that for the two sections, therefore ranges from 2,000 to 160,000 in 25 steps.

The usual method of obtaining phase inversion in a resistance-coupled amplifier having a driver and an output tube is to use an additional driver tube and output tube for the inverter circuit and to supply part of the voltage from the grid of the first output tube to this driver grid. Because of the feedback, the hum-to-signal ratio is lower at the plate of the first output tube than at the grid, and as a result the inverter phase will have a higher hum-to-signal ratio than the original output tube. Since the increased hum was objectionable for the inverter section, a new circuit was developed for this application. Although it has only one tube, the very necessary constant-gain feature derived from negative feedback is still obtained.

The minimum input signal of 1 millivolt made imperative an equivalent input background noise of less than 100 microvolts. Hum in the amplifier was greatly reduced by insulating the transformer shell from the chassis with Bakelite strips, by using a filament potentiometer, by shielding the input stage, and by using negative feedback.

The amplifier frequency-response characteristics are flat within ±1 per cent from 8 to 20,000 cycles per second. The amplifier operates satisfactorily down to 2 cycles per second and up to 70,000 cycles per second.

Except for the highest gain of 160,000, overloading of the amplifier is not evidenced at output voltages up to 200 volts rms or 560 volts peak to peak.

For all settings of the feedback controls, the gain increases about ⅓ per cent for every 1 per cent increase in line voltage. It is assumed that the increase in gain with increase in line voltage is a result of the change in characteristics of the first cathode-follower tube. This tube operates at a low filament voltage in a region where small changes in filament heating power will greatly affect the mutual conductance of the tube.

The hum and background noise in the amplifier is very low, varying from an equivalent input signal of 24 microvolts at the minimum gain of 2,500 to 17 microvolts when the gain is 160,000.

Richard P. Krebs and Thomas Dallas, Constant-gain Knock Pickup Amplifier, *Electronics*, January, 1947, p. 87.

Tuned Audio Amplifier with 1,500-turn Pickup Coil for Locating Power-line Faults

THIS portable low-frequency amplifier circuit is intended for use in locating accidental grounds on overhead electric-power distribution lines.

Before using the instrument, the fault circuit is energized from the normal power source through a capacitor. The resulting current flow can then be followed with the fault locator directly to the fault location. The sensitivity of the electronic fault locator permits following rural primary lines by car at a distance of 100 yards or more.

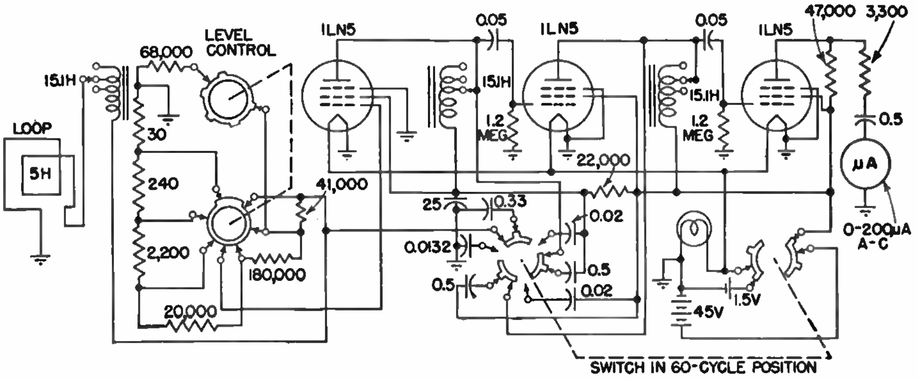

An electrostatically shielded loop antenna consisting of 1,500 turns of enameled wire wound in a steel housing is used to pick up the fault current. A shielded cable conducts the signal from the loop to the input of the amplifier. The loop coil is connected in series with an iron-cored reactor, and a capacitor tunes this combination to resonance. Two additional tuned circuits are contained in two following stages of the amplifier.

A step attenuator which changes the gain approximately 3 to 1 between adjacent taps is connected between the first tuned circuit and the grid of the first amplifier tube so that amplifier overload does not take place, provided that the meter pointer is kept on scale.

The iron-cored inductances are designed

to eliminate changes in inductance as the signal input level varies. This ensures that the circuits will remain tuned to the desired frequency regardless of input signal levels. The three tuned circuits provide selection to either of two desired tracing frequencies, 60 or 300 cycles. The sensitivity of the over-all instrument is such that good readings are obtained at 10 feet from unshielded 300-cycle currents of 0.0002 ampere or less. When the frequency-selector switch is placed in the 300-cycle position, the response to 60-cycle pickup is down approximately 1,000 to 1.

One effect of feeding the faulted circuit through a capacitor is to produce a high percentage of harmonic currents. The equipment is sharply tuned to one of the harmonics for discriminating against signals resulting from near-by circuits carrying normal currents. A second effect of the capacitor feed is to limit the flow of current in the faulted circuit to a safe value. A protective fuse is used with the capacitor, which may be a 15-kva phase-correcting type.

The detector may also be tuned to any frequency not harmonically related to 60 cycles for use with a special tracing signal generator, such as a buzzer or tone generator. Underground cables can also be checked for faults provided that the fault is broken down to a low resistance by the capacitor-feed method and that the tracing current does not flow along the sheath to low-resistance grounds past the fault. In such cases, the signal is followed above ground with the loop and locator.

Fault Locator for Power lines, *Electronics*, December, 1946, p. 198.

Inverse Volume-expansion Circuit for Automatic Tone Control

AUTOMATIC frequency compensation at varying audio output levels in an a-f amplifier is obtained in this three-channel circuit by using inverse volume expansion in the high and low channels. Representative values of components are indicated, but final choice of such sections as the filters will depend upon associated circuit components and on the requirements of a specific application.

The straight-through channel is entirely conventional for flat over-all frequency response. Principles of operation for the high and low channels are identical; therefore only the action of the low channel will be described.

All but the low-frequency components of the signal are filtered out, and the remaining voltage is developed across potentiometers R_1 and R_2 in the control-grid circuits of V_7 and V_{11}. The signal is shifted 180 degrees in phase by V_{11}, and this output is applied across R_3 in the grid circuit of V_8. The signals on the grids of V_7 and V_8 are now identical in frequency content but are 180 degrees out of phase. The outputs of these tubes are mixed in the plate circuits and cancellation takes place. Controls R_1, R_2, and R_3 may be set so that the output of the low-frequency channel is zero.

A portion of the unfiltered input signal is developed across R_4, amplified by V_9, and rectified by V_{10} to supply the screen voltage for V_{11}. Thus the gain of V_{11} depends on the magnitude of the input signal to the system. This means that when the input to the system diminishes, the signal on the control grid of V_{11} will decrease and the screen voltage also will go down. Thus the output of V_{11} to V_8 will go down more proportionally with decreased drive to the system than will the input to V_7.

If the various controls are adjusted for zero output from the low-frequency channel when the input is at a very high level, then any decreased drive will result in lowering the output of V_8 more than that of V_7. Only partial cancellation will take place, and some output will appear from the low-frequency channel. The output of this channel will, in fact, vary inversely with the input to the over-all system. The rapidity with which the bass channel will follow changes in over-all level depends on the time constant of the screen supply circuit for V_{11}. The rate at which bass boost will take place is varied by the setting of R_4.

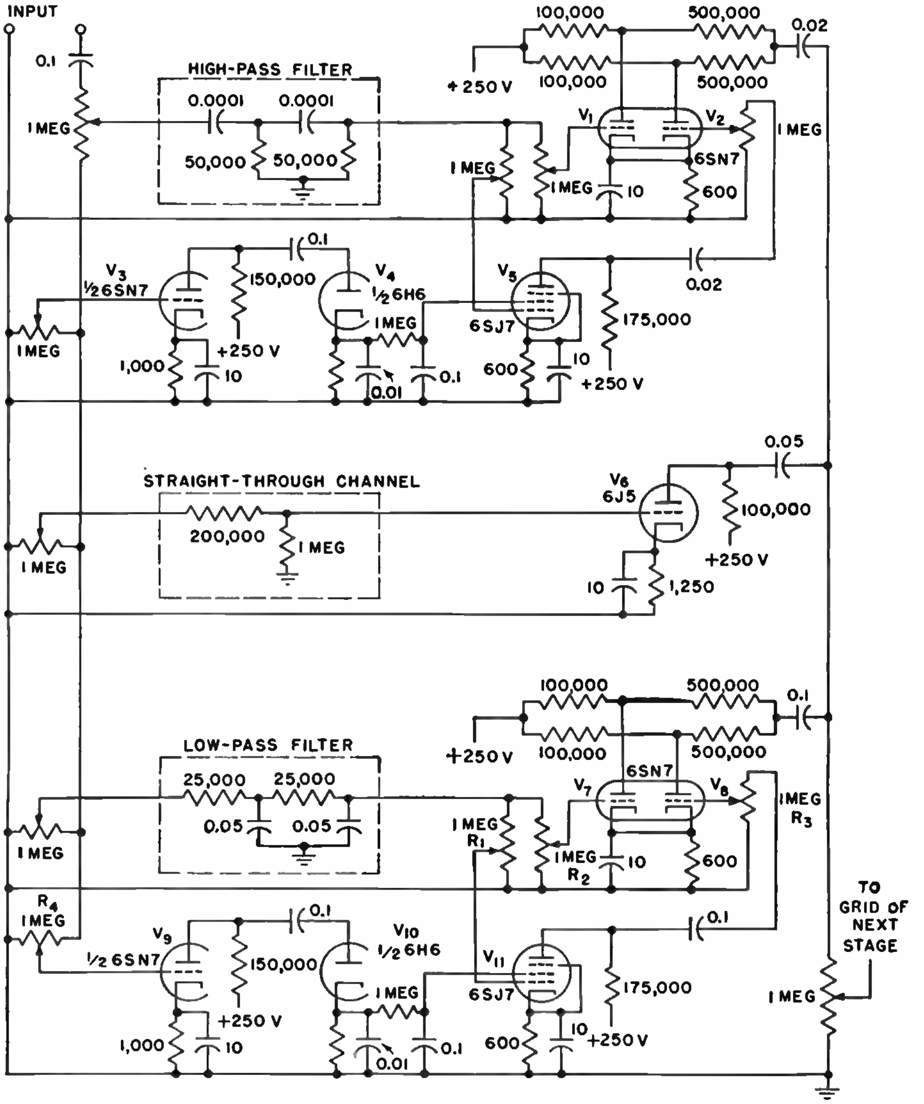

John D. Goodell and B. M. H. Michel, Auditory Perception, *Electronics*, July, 1946, p. 142.

Volume-expander Circuit for Audio Reproducing Systems

THIS electronic volume-expanding circuit amplifies and rectifies a portion of the audio signal and applies the resulting d-c voltage to the control grids of a push-pull controlled stage as a variable bias, without introducing objectionable time-delay and harmonic-distortion characteristics. Expansion does not start until the volume level reaches a certain minimum value; it is fairly linear with input level, once it does take effect, and is limited to a specified maximum. The rate of rise is 10 db in 0.001 second, and the rate of fall is 10 db in 1 second, corresponding to what would be heard in a room with average reverberation.

The expander circuit shown is designed for insertion between a single-ended stage and a push-pull stage in an a-f amplifier, but it can be inserted in a single-ended amplifier by adding to the output a good single-plate-to-push-pull-grid transformer and connecting the ends of the grid winding to the output terminals of the expander; the primary winding, suitably terminated with a load resistor, then gives single-ended output.

The control signal for the expander is taken from the point of insertion and is applied to a two-stage expander amplifier through a 1-megohm expansion-control potentiometer. The frequency response of this expander amplifier can well be limited to the range from 200 to 3,000 cycles, since most of the energy that determines the loudness of sound is in this range. This prevents activation of the expander by excessive record surface noise or low-frequency thumps. The expander output undergoes full-wave rectification and is then applied to the grids of the 6K7 tubes in the controlled push-pull stage. Push-pull is desirable for the controlled stage in order to minimize harmonic distortion and to obviate filtering of the grid-control signal.

The meter in the plate-supply lead of the controlled stage indicates the expansion at any instant. It is optional; but if used, a volume-indicator type of movement is essential, because an ordinary milliammeter would overshoot sudden changes in gain. The absolute level at which expansion begins depends on the gain of the control amplifier channel. The 2-megohm resistor and 0.25-μf capacitor in the rectifier output determine the release, or fall time, of the expander. A 10-megohm rheostat may be used in place of the resistor if it is desired to vary the time-delay action. This expander should not be used with vocal music, string quartets, or any other music where the volume range would be less than 20 db in the actual performance.

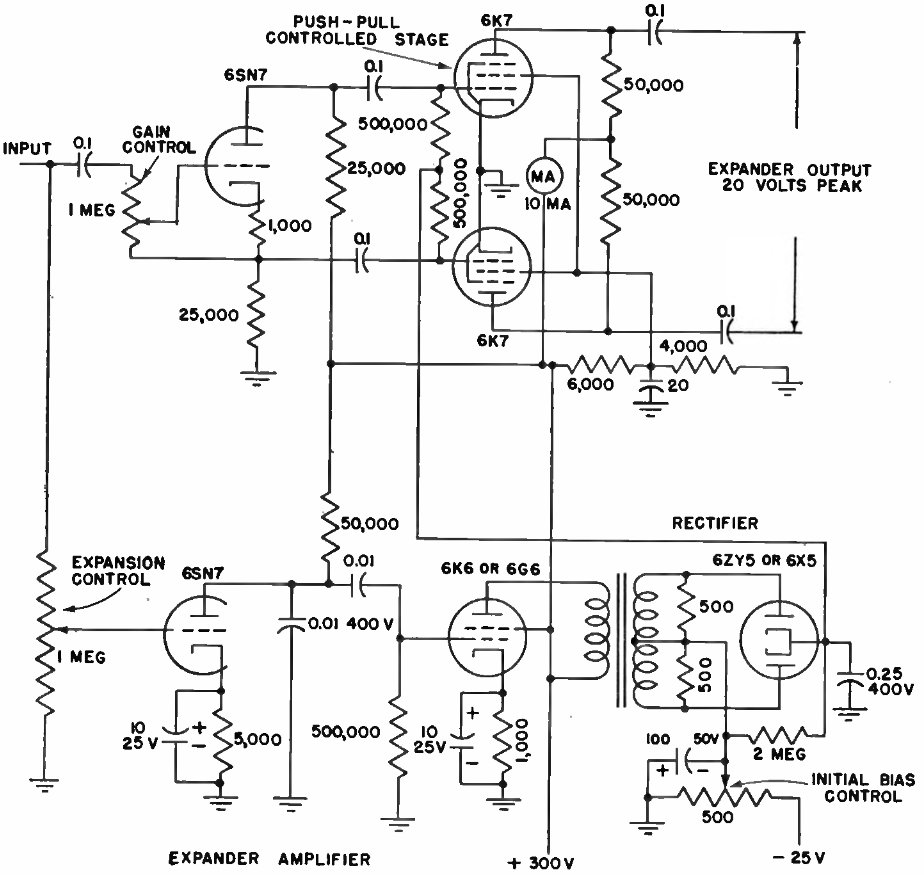

Norman C. Pickering, Improving Recordings, *Electronic Industries*, October, 1945, p. 82.

Surgeless Single-ended Volume-expander Circuit Using Dummy Tube

THE expander circuit shown represents a method of balancing out changes in plate current while maintaining the entire system single-ended with respect to ground and eliminating the necessity of using expensive transformers. In addition, the inherent system distortion is extremely low over a controlled range of approximately 15 db. The attack time may be made extremely short without causing undesirable surges, while the release time may be made as long as desired.

The audio signal is applied to grid 1 of the input 6SJ7, while the variable expander bias is applied to the suppressor. As the suppressor is made more positive, from a given negative value, the screen current decreases while the plate current increases. In the 6SJ7, the negative transconductance to the screen and the positive transconductance to the plate match closely when the plate transconductance is changed over a wide range without altering the total cathode current. Unfortunately, as the suppressor bias is varied, the sum of control grid to screen and control grid to plate transconductances remains constant. If screen and plate of a single tube were tied together, no appreciable variation of over-all gain would occur.

The plate of the signal amplifier is connected to the screen of a dummy 6SJ7, and since expansion voltage is applied to the suppressor of both tubes, the dynamic change in plate current in the signal amplifier is balanced by the opposite change of screen current in the dummy. In a similar fashion, screen-current change in the signal amplifier is canceled by plate-current change in the dummy. Consequently, variation of the effective transconductance of the signal amplifier is secured without introducing current surges in the signal circuit.

The maximum signal input to the expander stage is approximately 0.25 volt, and the maximum signal output of the system is of the order of several volts. The diode rectifier incorporated in the suppressor circuit prevents the expander rectifier from driving the suppressor positive, which would produce blocking and loss of expansion control. The time constants of the expansion rectifier systems are such that 75 per cent of final gain is achieved in the *Fast* position in approximately 0.02 second. This time constant is tripled in *Slow* position. The two decay times are about 0.5 and 1.2 second, respectively.

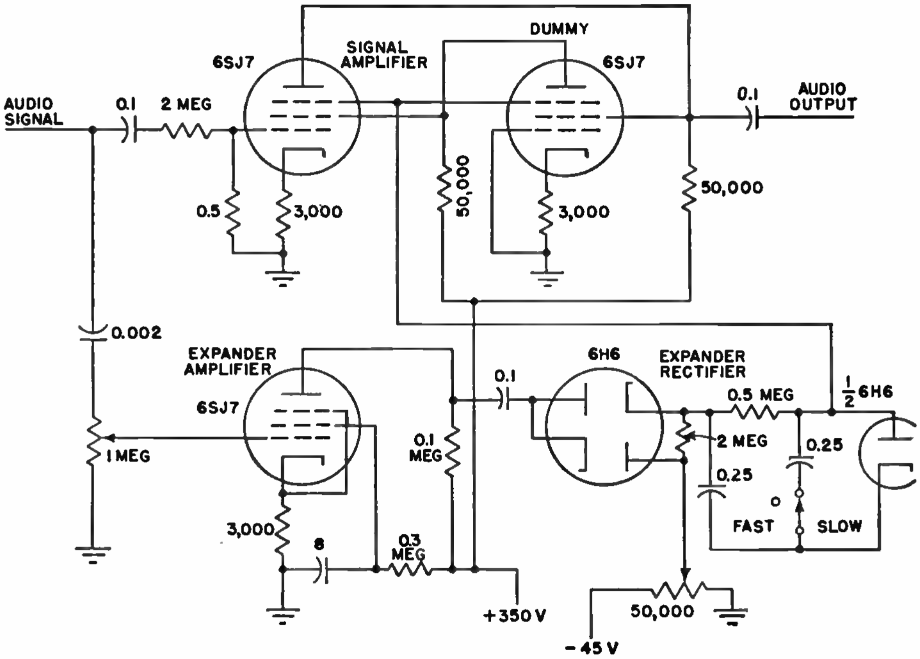

A. Nelson Butz, Jr., Surgeless Volume Expander, *Electronics*, September, 1946, p. 140.

Push-pull Electronic Volume Expander for Audio Amplifiers

THE circuit shown provides full expansion of a wide range of program material in about 10 milliseconds and return to normal gain in 1 second. Even when improperly adjusted, it does not have many of the undesirable characteristics of other such circuits.

The incoming audio signal is amplified by two triode control amplifier stages, rectified, and the resulting d-c voltage used to vary the bias of 6SK7 variable-mu pentodes used in push-pull as the variable-gain stage. Variations in audio level thus produce variations in the gain of the stage. Use of push-pull for the expander make it immune to residual ripple that may come through from the rectifier. Another advantage of push-pull is the possibility of avoiding the use of bypass capacitors, as changes of screen and cathode voltages in an expanding stage are in such a direction as to oppose the change in gain caused by a change in grid bias. Low-frequency transients, or thumps, in

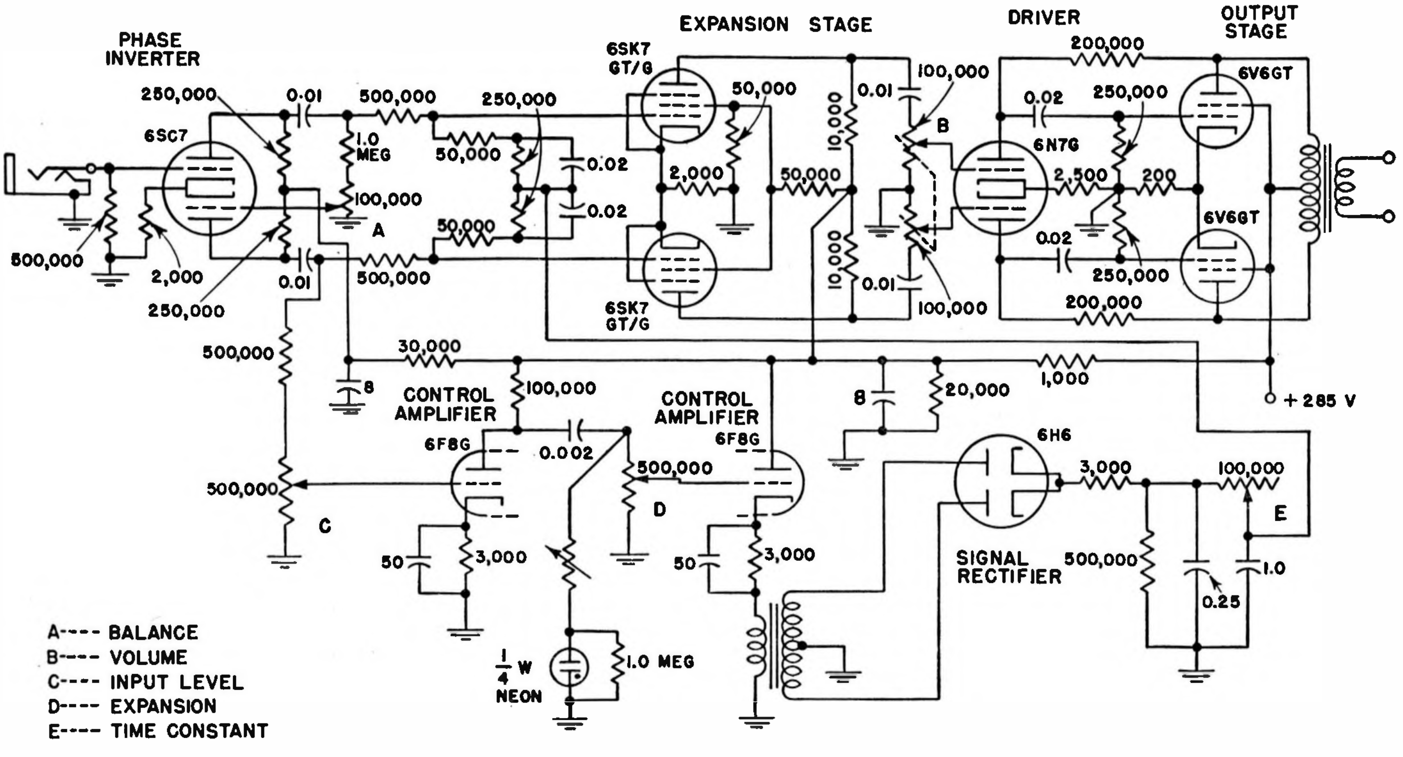

the output, due to rapid expander action, are canceled out also in a push-pull stage, since the control bias is applied to both grids simultaneously.

Even with push-pull operation, however, it is still necessary to keep the transients in the output of the individual expander tubes from becoming so large as to cut off the following stage. This is accomplished through use of low values of plate load resistance and coupling capacitance. The loss in low-frequency response is compensated for by the *RC* networks in the grid circuits.

In the control amplifier stages preceding the rectifier are two gain controls, one to vary the amount of expansion and the other to compensate for major differences in input signal level. The *RC* filter of the rectifier responds rapidly to impulses of signal and yet still eliminates all traces of rectifier ripple from the signal circuit, because all resistors through which the capacitors charge are very small and those through which the capacitors discharge are very large.

The only way to tell accurately how well an expander is operating is to play the same passage twice on a phonograph record, once with expansion off and once with it on. The resistors associated with the neon lamp are so adjusted that the lamp begins to glow when the signal voltage is large enough to drive the expander to full expansion. The level at this point is adjusted by control *C* in such a way that the lamp will blink at peaks of modulation. With the signal level in the expansion control circuit so adjusted, it is possible to set gain control *D* in terms of its own panel calibrations to give the number of decibels expansion desired for the particular program material at hand.

Robert W. Ehrlich, Volume Expander Design, *Electronics*, December, 1945, p. 124.

Audio-frequency Volume Expander Employing Type 6L7 Hexode

For high-fidelity broadcast reception and phonograph-record reproduction, this audio volume-expander circuit permits a closer approach to the original in volume, even though reproduction is at a much lower level and compression is introduced in the studio or the recording amplifier. Operation is entirely automatic, and the degree of expansion is readily controlled.

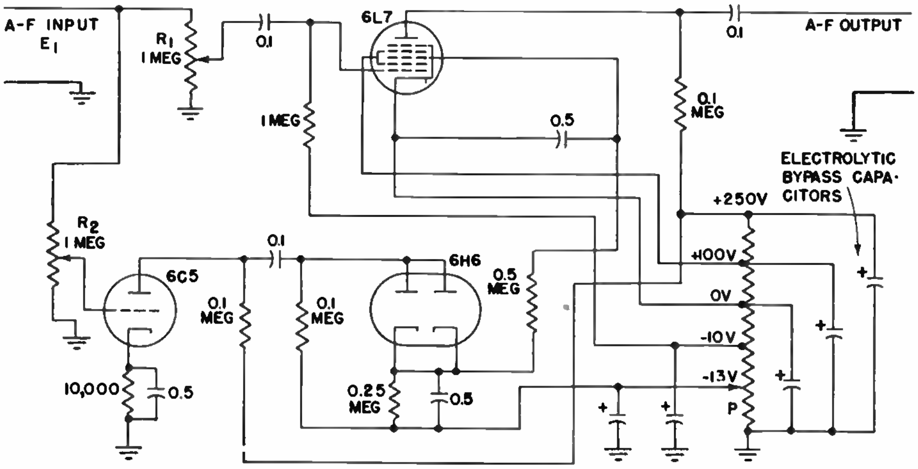

The audio signal in the audio amplifier of the receiver or phonograph is applied to the 6L7 and the 6C5 tubes at the same time, both channels being supplied by a volume control. The output of the 6C5 is applied to the rectifier tube, a 6H6, which is so connected that the rectified voltage being applied to grid No. 3 is positive. The initial bias on the inner grid is 10 volts while the initial bias on the third grid is even more. Under these conditions the tube is working at very low gain. When a strong signal comes in, the voltage on the third grid becomes less negative, increasing the gain of the tube.

In order to prevent coupling between the 6C5 and 6L7 amplifiers, the rectifier output is filtered. The best compromise in time-constant values has been found to be ¼ second. A shorter time constant results in annoying up-and-down variation for every note played.

The degree of expansion is controlled by volume control R_2. The expansion depends on the voltage applied to the grid of the 6C5, and this is dependent on the volume-control setting as well as on the voltage E_1.

In order to minimize harmonic distortion, the peak signal applied to the first grid of the 6L7 should not exceed 1 volt. This means that there must be at least another stage between the 6L7 and the output tube. Since individual tubes differ, it has been found necessary to provide the adjustment of the initial bias on grid 3 by means of potentiometer *P*. The plate current should be 0.15 ma with no signal input.

Volume Expansion, *The Aerovox Research Worker*, December, 1936, p. 1.

Audio Volume-compressor Circuit with Flat Response to 14,000 Cycles

This unique audio compressor circuit permits boosting the average percentage of modulation of a short-wave transmitter up to 90 per cent. The response is flat to 14,000 cycles. The input and output transformers are standard models, connected with polarity as indicated in the equivalent circuits. Between the cross wires at *P* are resistors R_1 and R_2, each shunted by one section of the 6N7 double-triode control tube.

Under normal conditions, when there are no peaks, the combined resistance of R_1 and R_2 and the tube is low because the triode sections have a small negative bias (developed across the 2,000-ohm cathode resistor) and hence have fairly low plate-resistance values. The two crossed wires can then be considered as connected together at *P*, placing the windings in series aiding and giving signal transfer from input to output as required. The insertion loss under this normal condition is only 7 vu, which is easily made up in other amplifiers.

The input signal is also applied through the 25,000-ohm potentiometer to the 6F8 push-pull voltage-amplifier stage, providing input voltage for the 6H6 signal-rectifier tube. Diode plate current develops across the time-constant circuit a voltage drop that acts in series with the automatic *C* bias voltage across R_3 and aids that voltage, thereby driving the control-tube grids more negative. Under normal-signal conditions, this merely drives the operating point slightly farther down on the characteristic curve without bringing it to cutoff.

Signal peaks increase the plate current through the time-constant circuit of the signal rectifier in proportion to signal-peak intensity, thereby increasing the negative bias on the control tube. As this bias approaches the cutoff value, the plate resistances increase rapidly and the feed-

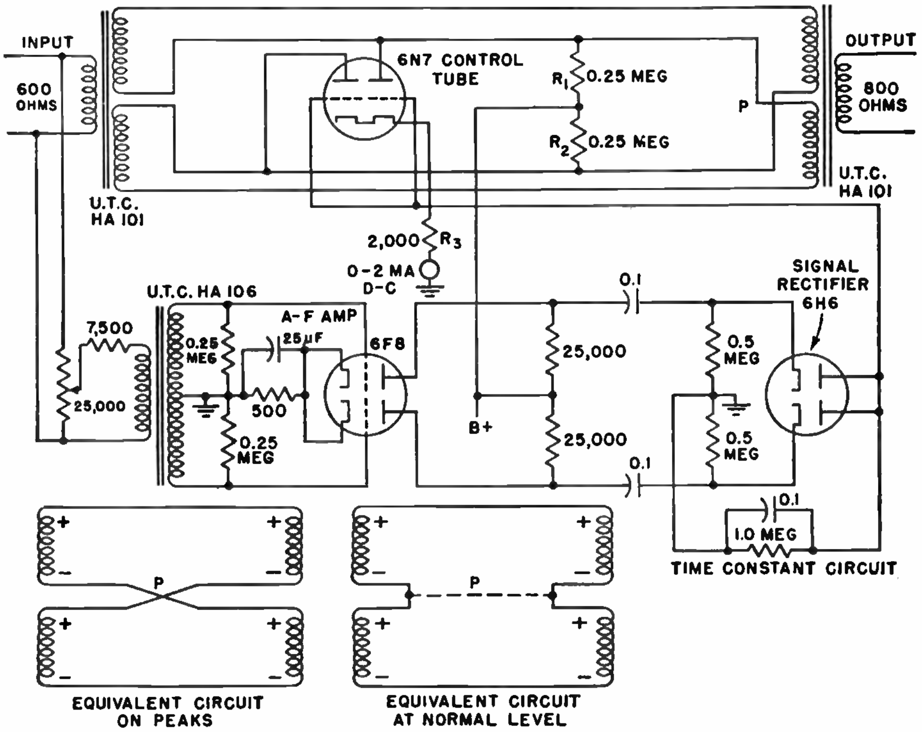

through circuit approaches that shown for peaks, where there is no connection between the crossed wires at *P*. (Actually there is still 0.5 megohm between the wires due to R_1 and R_2, but this can be considered infinitely high for purposes of explanation.) Now the polarity of the two secondaries of the transformer is such that they oppose each other and provide the desired suppression on signal peaks.

Initial adjustment involves setting the input potentiometer to zero, feeding in an audio signal tone of a strength such as to give a compressor output of 9½ vu, and then advancing the potentiometer until the output drops to 8 vu. This sets the threshold at which effective compression begins. A compression ratio of 10 to 1 will then be provided on strong peaks, which means that a 10-db increase in input level will be limited to a 1-db increase in output level.

The circuit has extremely low inherent distortion, with phase-shift distortions not even noticeable on an oscilloscope and with a frequency response that is flat within 1.5 db over the entire range from 40 to 14,000 cycles. Tube failures or other defects in the compressor cannot interrupt the program; in fact, when a compressor tube is pulled out, the level automatically drops about 5 db to protect the transmitter against peaks.

George Q. Herrick, Volume Compressor for Radio Stations, *Electronics*, December, 1943, p. 135

Automatic Volume Expander with Combined Bias and Expansion Control

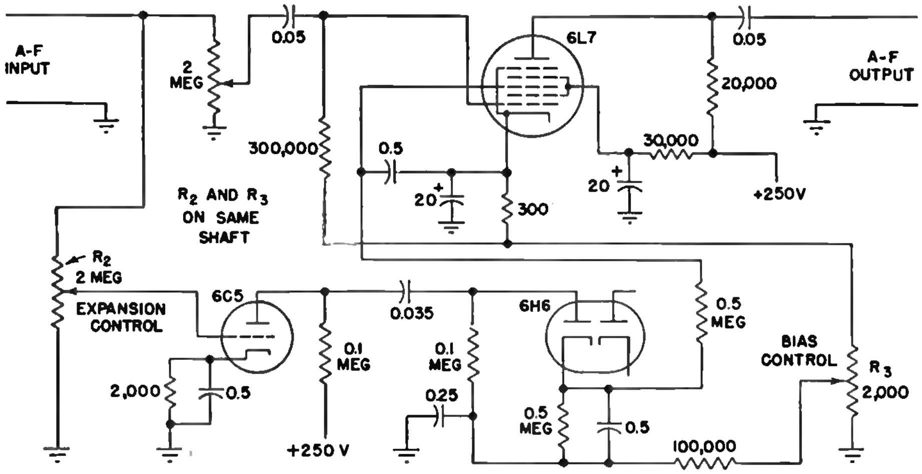

This modification of the a-f volume expander employing a type 6L7 hexode adds less distortion and is easier to operate, besides being less influenced by tube variations. The bias of grid 3 of the 6L7 tube is adjusted simultaneously with the expansion control, keeping the average level approximately constant.

In order to add 30 db to the volume range, it is necessary to vary the gain of the 6L7 tube in a ratio of 32 to 1. The signal voltage applied to the first grid should be kept small. Capacitors should have high leakage resistance, as even slight leakage may make the circuit inoperative. Insertion of the expander in existing equipment may cause complications, as its required location at a point where signal level is low causes any pickup of hum to be greatly amplified, and stability may also be introduced. It is preferable to build the expander as an integral part of an amplifier or receiver.

Volume Expansion, *The Aerovox Research Worker*, December, 1936, p. 1.

Paraphase Circuit for Independent Bass-treble Tone Control

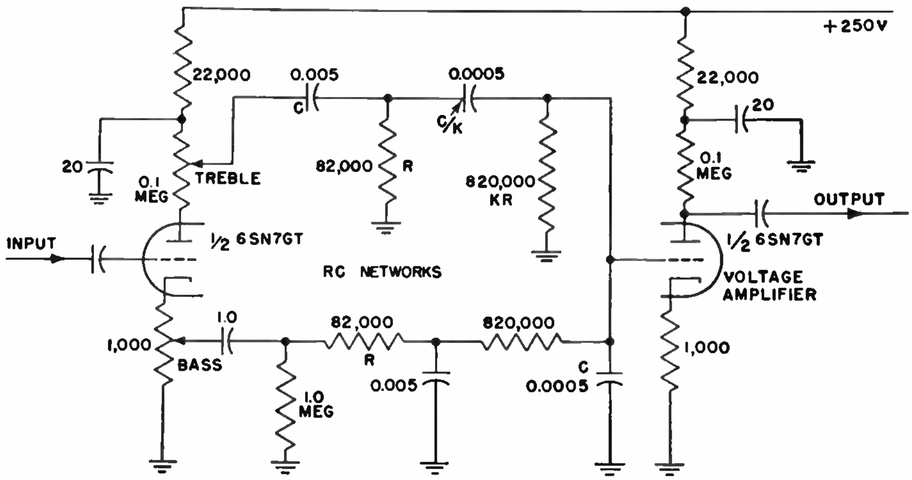

THIS one-tube tone-control arrangement using half of a 6SN7GT can be inserted in an audio amplifier to vary the bass and treble frequency response independently about some crossover frequency. Dual *RC* filter networks following the triode determine the crossover frequency. Values given in the circuit are for a crossover of 400 cycles. For another crossover frequency *f*, choose a value of *R* greater than 10 times the generator impedance (generator impedance may be taken as 1,000 ohms, and thus anything above 10,000 ohms will do; 82,000 was used in the circuit shown). Make *C* equal to $1/(2\pi fR)$ and make *K* equal to 10. All critical network values can now be determined.

D. L. Jaffe, Paraphase Bass-treble Tone Control, *Radio*, March, 1946, p. 17.

Woofer-tweeter Crossover Network Using Inexpensive Components

THIS crossover network for feeding a low-frequency horn and a high-frequency horn from a single amplifier gives performance that is flat within 2 db from 30 to 10,000 cycles and yet uses only low-cost components. Each output transformer is required to work over only a narrow frequency range so that inexpensive units rather than high-fidelity units can be used. Also, placing the network reactances in the high-impedance part of the circuit results in small capacitor values.

As the equivalent circuit shows, a ½-section low-pass portion allocates the low-frequency output to the appropriate load, and a 1½-section high-pass portion feeds the high-frequency load. Numerical design follows conventional practice. The impedance level was chosen as 5,000 ohms, which is the nominal load for a pair of 2A3 tubes operated self-bias. Inductance L_1 should have its windings closely coupled to enforce balance; one can be placed on top of the other. Both L_1 and L_2 should have adequate iron and copper to permit opening up a large air gap to hold the inductances reasonably constant at all levels of a-c voltage under which they will be required to operate. Matching transformer T_2 can be any readily available transformer of proper ratio that will give the required 2 henrys inductance when the air gap is opened up sufficiently to hold the inductance nearly constant over all levels of excitation.

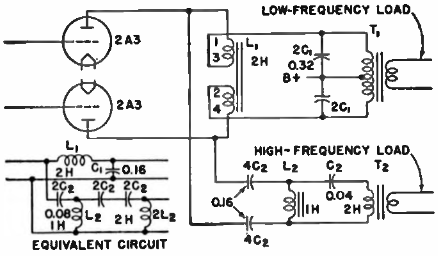

Transformer T_1 should have a high primary inductance, of the order of 50 to 100 henrys, but the leakage inductance as measured at the primary can be as high as 1 henry. Transformer T_2 must have a low leakage, preferably less than 0.05 henry to hold the loss at 10 kc to less than 3 db. It may be a low-cost unit, however, since its primary inductance need be only 2 henrys after opening the air gap—say 10 henrys before adding the air gap. Transformers T_1 and T_2 should have the proper turns ratios to match the 5,000-ohm filters to the respective loads.

The fact that a pair of 2A3 or 6A5G tubes exhibits a plate impedance of only 2,000 ohms when the load impedance and the surge impedance of the filters are 5,000 ohms is unimportant. A measured performance curve shows each output to be flat in its transmission range and to fall off smoothly in its attenuation range. The mismatch is necessary for proper loading of the output tubes.

Paul W. Klipsch, Woofer-Tweeter Crossover Network, *Electronics*, November, 1945, p. 144.

Equalizing Amplifier Having Adjustable Networks in Feedback Loop

THE push-pull high-level amplifier described here performs outstandingly as a sound-effects equalizer, recorder cutting-head driver, playback equalizer, or loudspeaker-equalizer driver. It may be used to lift or lower the high end of the frequency spectrum in calibrated steps at a known frequency. Any specified low frequency may be lifted in the same manner. The input impedance is constant in both magnitude and phase angle, and its output impedance is very nearly so. It has a gain of 65 vu, a maximum output level of 12 watts, and its input may be operated at a level of −40 vu while still maintaining a noise level 65 vu below the output.

One of the most interesting applications is equalization, or preequalization, of telephone-cable circuits. In broadcast work it is often possible to purchase a lower grade service than the regular broadcast-quality line, and equalize this service to the equivalent of a quality line. To do this requires a rather sharp peak in the frequency characteristic of the equalizing equipment.

The first stage is only for the purpose of providing an extra 30 vu or so of gain. The last two stages in the normal flat, or no-equalization, position comprise a simple and rather conventional feedback amplifier whose over-all gain is varied with respect to frequency in a predetermined manner by inserting in the feedback loop frequency-discriminating networks that have the effect of changing both the magnitude and the phase of the feedback.

Resonant equalizer circuit *A* includes only one reactive element—capacitance. Thus no resonances may occur involving a rapid phase shift. At the same time, the frequency response is purposely wrecked at the high end by inserting an *RC* network in the 6L6 grid circuit. This network has the additional function of stabilizing the tube, which, with its very high transconductance, will often oscillate parasitically.

The feedback circuit *PMX* and *QNY* is designed in such a way that a number of different types of frequency-discriminating networks may be simultaneously applied. These are shown individually below. They are to be connected as indicated by the lettered terminals and may be used separately or simultaneously to produce composite curves.

Network *B* consists of a series of capacitors that may be connected across the 7F7 cathodes to shunt the high frequencies. This changes the magnitude and phase of the feedback at high frequencies, thus increasing the over-all amplification. By the same token, network *C* is a series of capacitors that can be connected between the points *P-M* and *Q-N*, changing the magnitude and phase of feedback at low frequencies, thus increasing the over-all amplification. Network *D* is of the same general character as network *B*. It forms a pair of capacitors bridged from *M* to *X* and *N* to *Y*, which reduces the high-frequency response in the same manner as that in which the section *B* increases it. Networks *B* and *C* are calibrated in volume units at their respective frequencies of 5,000 cycles and 50 cycles. The first position, labeled *O*, is the flat or unequalized position. In network *B*, C_2 is inserted in this position and has a value necessary to give flat high-frequency response. If none is necessary, the position may be left open. In network *C* the first position should be filled with whatever capacitor is required to produce a flat low-frequency response. Usually this position may be shorted (infinite capacitance). No great amount of ingenuity is required to combine networks *C* and *D* into a single switch with a center zero position if a coarse adjustment of this type of equalization is permissible.

With a simultaneous application of networks *B* and *C*, the low-frequency equalization may be adjusted without materially affecting the high-frequency response, and vice versa. Since the midfrequency gain remains essentially constant as the equalizer switches are rotated, adjustments may be made while the amplifier is in use. One important detail in connection with section *C* is the use of the shorting type of selector switch. Were a nonshorting type of switch used, the feedback would be removed between steps as the switch was

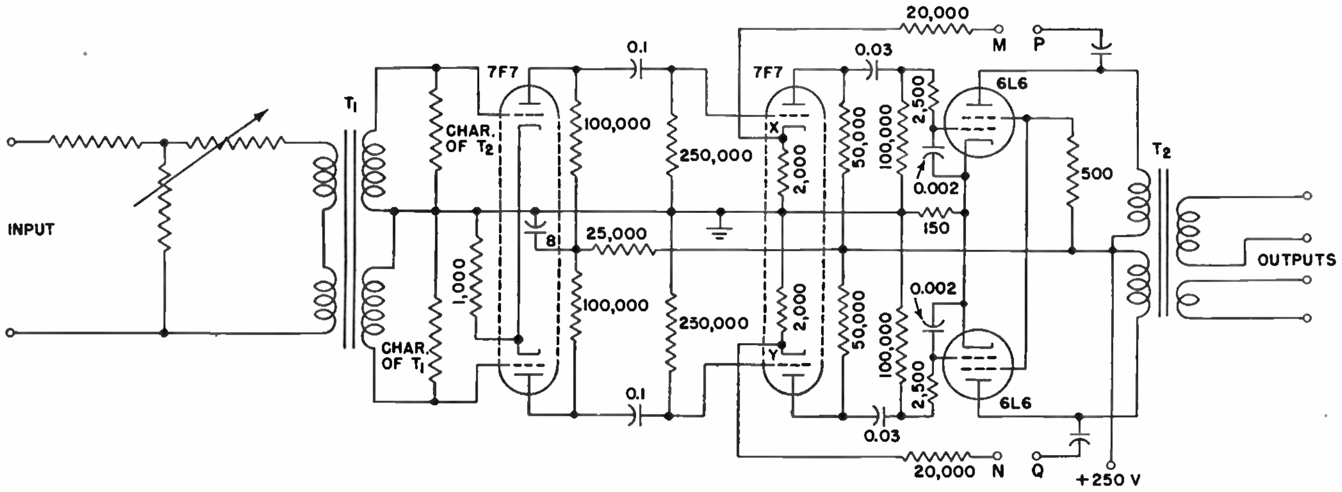

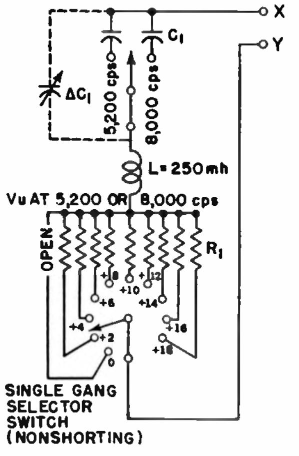

RESONANT EQUALIZER (A)

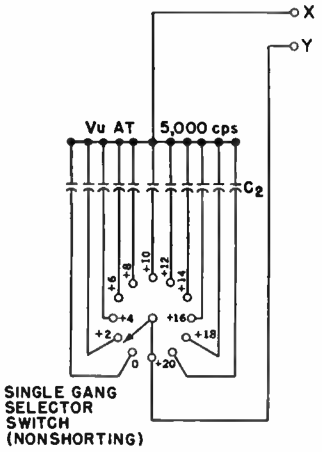

NONRESONANT EQUALIZER (B)

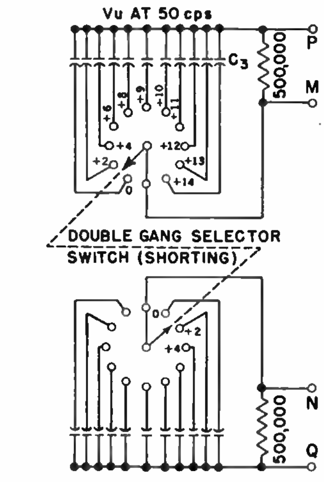

NONRESONANT EQUALIZER (C)

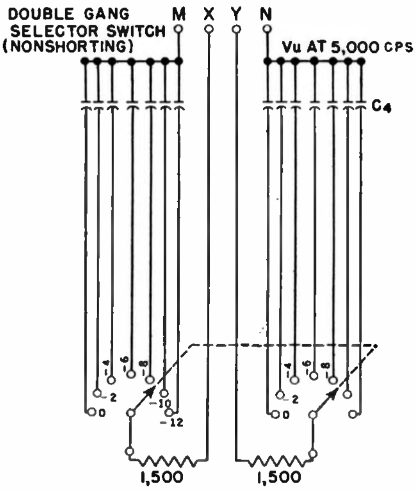

NONRESONANT EQUALIZER (D)

rotated, causing abrupt fluctuation of gain.

To provide constant and resistive input and output impedances for the ideal equalizer, isolation pads must be inserted at both input and output terminals. The T-pad volume control shown at the input should serve this purpose. If constant output impedance is required, as in the case of line driving, the secondary winding of T_2 should be followed by a 6- to 10-db pad.

The first 7F7 cathodes are tied together into a common unbypassed resistor, as are the two 6L6 cathodes, for the purpose of helping to force a balance between the two sections. Any tendency on the part of one side of the push-pull section to have more gain than the other will produce a resultant voltage across these cathode resistors. This voltage will in turn act to produce degeneration within the stage itself, tending to reduce the initial unbalance. If there is no initial unbalance, there will be no net voltage across these cathode resistors, and thus it will be useless to bypass them.

The 0.03-μf coupling capacitor between the last two stages of this amplifier is too small to give a good low-frequency response in a normal amplifier. However, if a large capacitor is used, trouble may be experienced with self-oscillation at a very low frequency. To force a balance between the two sides of the push-pull amplifier, the two 6L6 screens are tied together and receive and supply voltage through a common resistor. Any tendency toward a push-pull self-oscillation, or unbalance, in the output stage immediately appears as a resultant voltage across this resistor and tends to cancel.

The d-c blocking capacitors leading from the output plates to points *P* and *Q* should be low-leakage high-quality components. If there is appreciable leakage, objectionable pops will be heard when rotating the *C* switch; indeed the whole amplifier may become unstable.

If it is desired to produce a peak in the high-frequency response, such as might be required for the equalization of loaded cable circuits, the 7F7 cathodes may be shunted by one or more resonant circuits of adjustable *Q*. An example of this sort of equalizer will be found in section *A*. It consists of *L*, *C*, and *R* in series between the two cathodes. The resistance may be varied by means of a tap switch arrangement, producing the effect of varying the *Q*. Other switches and trimmers may be used to adjust the frequency of resonance.

E. G. Cook, A Flexible Equalizing Amplifier, *Electronics*, July, 1942, p. 36.

Three-band Variable Equalizer with Zero Insertion Loss

This versatile preequalizer provides gain or attenuation adjustment independently in 1-db steps in the low-, high-, or midfrequency bands of the audio spectrum. Applications include recording, rerecording, sound-system compensation, and broadcast-station equipment.

The unit was designed so that low- and high-end emphasis, or suppression, is in discrete steps, achieved by a shelf effect arranged to shift the frequency of one-half loss or gain further toward the extremes of the signal band or nearer the midfrequencies, thereby affecting the normal circuit characteristics only to the extent required by the necessary correction. Maximum suppression is 4 to 6 db, maximum emphasis is 8 to 10 db, and the change between steps is approximately 1 db, measured at 100 cycles and 7,000 cycles.

Midfrequency correction is a maximum at 2,750 cycles and is variable in steps of ½ db up to a total of 5-db suppression or emphasis. Any combination of low-, high-, and midfrequency responses can be obtained. Insertion loss of the system of networks can be made zero by a suitable choice of fixed attenuators.

The system may be inserted into a circuit without affecting normal transmission, manipulations, or usage and, as previously specified, volume corrections need not be made simultaneously with equalization, although under some circumstances, particularly when low-end corrections are applied, there will be an apparent level change.

Two constant-impedance networks are used for midfrequency control. One is a suppression network of the required shape and fixed in amount at the desired maximum; the second is an emphasis network connected in series and variable in equalization by an amount equal to the sum of the maximum amounts of desired suppression and emphasis. At an intermediate point in the setting of the variable attenuator the frequency characteristics of the two networks are inverse and the net applied frequency correction is zero.

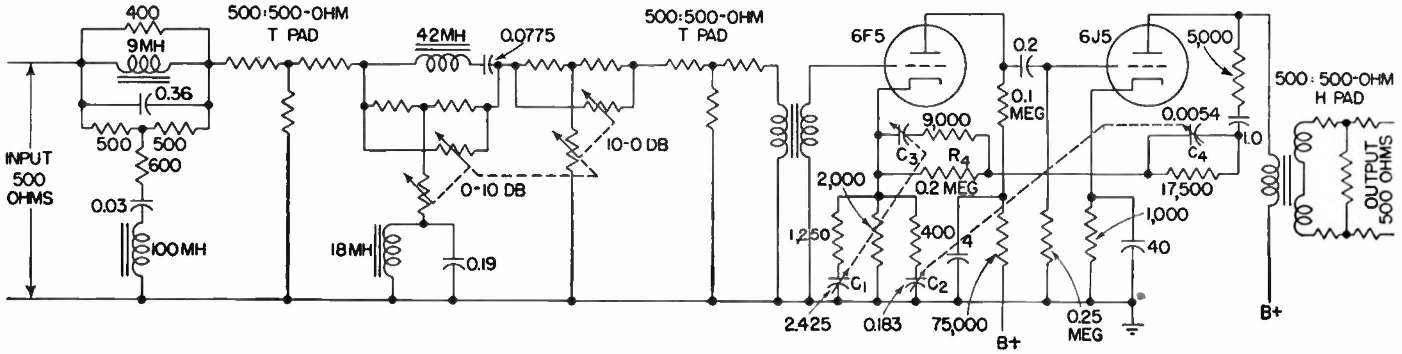

To maintain constant insertion loss at all correction settings, a second variable attenuator having a 10-db maximum is mounted on the same shaft with the correction network attenuator, connected in series with the other two networks, and mechanically arranged to maintain the total attenuator loss at 10 db. By providing amplification of greater than 10 db, low- and high-frequency correction can be realized by negative feedback. The two-stage amplifier uses parallel feedback from the second plate circuit to the input cathode resistor.

Low- and high-end suppression, or emphasis, can be controlled by capacitor-resistor combinations. With a suitable choice of resistors, capacitors, over-all gain without feedback, and feedback factor, the specified frequency characteristics can be obtained by increasing or decreasing C_1, C_2, C_3, or C_4 in discrete steps, as follows:

Low-end suppression:	Decrease C_1
Low-end emphasis:	Decrease C_3
High-end suppression:	Increase C_4
High-end emphasis:	Increase C_2

Capacitors C_1 and C_3 are connected into the circuit with a single switch that is arranged to maintain C_1 constant while C_3 is being decreased to produce low-end emphasis. Conversely, C_3 is held constant as C_1 is decreased to give low-end suppression. Capacitors C_2 and C_4 are switched in the same manner except that one of them is held at the minimum value while the other is increased, in steps, to obtain high-end emphasis or suppression.

The amplifier at zero equalization gives a gain of 30 db, which must be reduced to zero by attenuators. The system of networks is assembled with these attenuators, three fixed and one variable (in the midfrequency section), located so as to make the input and output essentially resistive.

Because the feedback network is not of abnormally high impedance, the network controls can be placed in a separate unit that contains the two capacitor accumulator switches, the midfrequency network attenuator with the compensating ganged attenuator, and the feedback network capacitors.

Due to the potential differences that gather on the switch contacts, there will be some noise unless these potentials are reduced by connecting resistors between adjacent switch contacts. These bleeder resistors can be made sufficiently low to reduce noise without seriously affecting the frequency characteristic. A further aid in maintaining low noise from the switches is the small difference in attenuation between steps.

Frequency characteristics do not change with tube replacement or with a 10 per cent change in plate-supply voltage. Total noise, measured at the output of the system, is 87 db below 0.001 watt, which is sufficiently low to work into high-gain circuits for recording or rerecording.

L. D. Grignon, Three-band Variable Equalizer, *Electronics*, January, 1947, p. 112.

Universal Fifteen-channel Equalizer Circuit for Audio Equipment

WITH the circuit shown here, it is possible to change the response curve of an audio amplifier at will to suit acoustic conditions of public-address-system locations or theaters or to obtain the most pleasing reproduction from a phonograph record. Fifteen separate calibrated tone-control levers forming the visual curve are calibrated directly in decibels.

Response characteristics of microphones, loudspeakers, and phonograph pickups can be determined by using signal sources and amplifiers having reasonably flat response characteristics.

RC circuit is broadly peaked at a particular frequency and has its own individual gain control. The gain-control levers for the 15 channels can be so arranged on the control panel that their ends trace the over-all response curve to which the instrument is set.

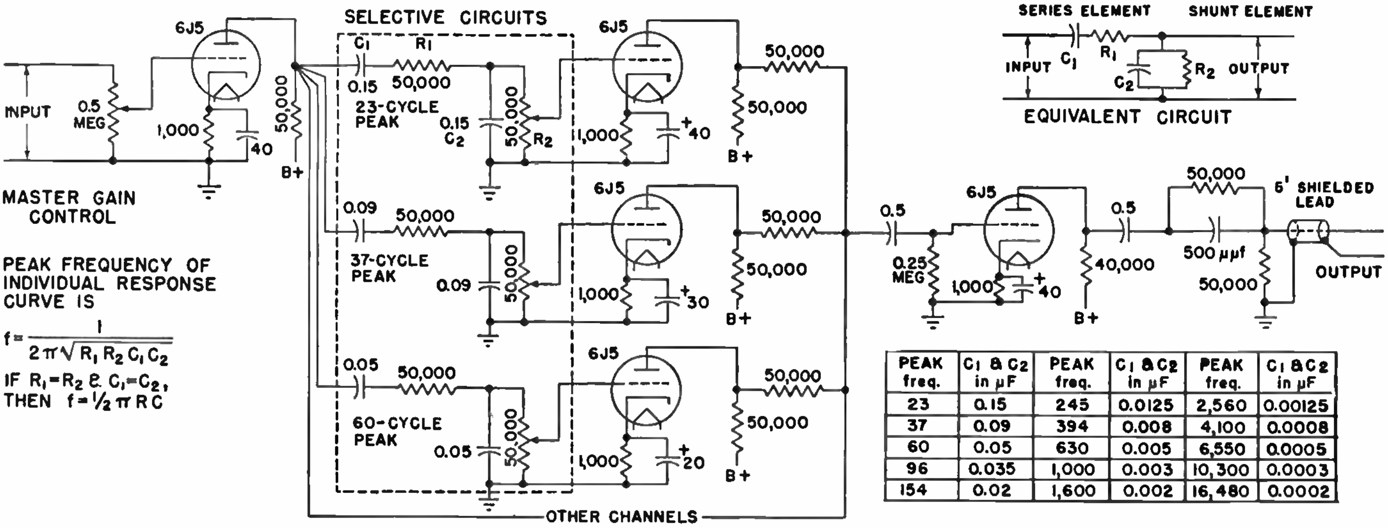

PEAK freq.	C_1 & C_2 in μF	PEAK freq.	C_1 & C_2 in μF	PEAK freq.	C_1 & C_2 in μF
23	0.15	245	0.0125	2,560	0.00125
37	0.09	394	0.008	4,100	0.0008
60	0.05	630	0.005	6,550	0.0005
96	0.035	1,000	0.003	10,300	0.0003
154	0.02	1,600	0.002	16,480	0.0002

channels are connected in parallel but act independently, each controlling a different portion of the audio spectrum.

To determine the over-all response requirements of an audio amplifier intended for high-fidelity sound reproduction, the tonalizer unit is inserted in the circuit of the amplifier to be tested, at some point where the signal voltage is about 2 volts, and the 15 channel controls are adjusted until the output of the amplifier is the same at all audio frequencies. The response curve then shows on the front panel, since the positions of control levers

The input voltage-amplifier stage with its master gain control permits adjusting the over-all gain of the system and has a sufficiently high input impedance for a plate-circuit connection to any stage when the signal level is about 2 volts in the amplifier to be tested. The plate circuit of the 6J5 input stage feeds each of the 15 selective channels in parallel (for simplicity, only three channels are shown in the diagram).

RC circuits are used as a-f filters to eliminate phase distortion and other drawbacks of tuned *LC* circuits. Each

The output matching circuit and shielded cable are optional, and are used only when it is inadvisable for some reason to connect the 0.5-μf output capacitor directly to the grid of a tube in the amplifier being tested.

A conventional well-filtered full-wave power pack makes the unit operable directly from an a-c line. A 5Y3G tube is used with a transformer providing 375 volts on each side of the center tap. Each selective circuit consists of a series element C_1R_1 and a parallel element C_2R_2, forming a voltage divider as shown in the equivalent circuit. R_1 and R_2 are 50,000 ohms for all channels, but C_1 and C_2 are equal in individual channels only.

At low audio frequencies, most of the signal voltage is dropped across the series element, and only a relatively small voltage is available across R_2 for transfer to the amplifying portion of the channel.

At high audio frequencies, the impedance of the shunt element is much lower than that of the series element, and again the voltage across R_2 for transfer to the amplifier tube is relatively small.

As the frequency is decreased from a high value, the impedances of both the series and shunt elements increase but at different rates. The peak response occurs at the point where the two impedances increase at the same rate, for the two impedances are then increasing at the same proportional rate and are giving a high constant-output voltage across R_2, corresponding to the peak of the response curve.

The lowest peak frequency employed in a 15-channel tonalizer is 23 cycles. Successive peaks are each approximately 1.6 times the preceding value. This gives considerable overlap of response curves, with smooth changes in response and with a maximum possible variation of about 5 db between adjacent peaks.

When all 15 channel controls are set for equal or maximum gain, the response curves combine to give essentially flat over-all response.

If the channel controls are not calibrated in decibels, the response curve can be obtained with one additional run after the controls are set. A decibel meter is connected to the output of the amplifier under test, with the tonalizer in the system. The a-f input from the a-f signal generator is then varied over the frequency range. The actual decibel variations are then read on the meter and plotted to secure the response curve. Due allowance must, of course, be made if the amplifier itself is not flat, but most amplifiers are designed to have reasonably flat response.

The tonalizer input- and output-impedance values can be considered as over 50,000 ohms for all practical purposes. Input voltages in the range of 0.25 to 5 volts will give the maximum output voltage of 10 volts at all frequencies. The input level can be adjusted with the input volume control to prevent overloading of the amplifier stages in the tonalizer. Shielded input and output leads, each 5 feet long, are used.

Paul H. Thomsen, Universal Equalizer Provides A-F Amplifier Design Data, *Electronics*, August, 1943, p. 120.

Direct-coupled Input Stage for Phase Inversion in Audio Amplifier

A SIMPLE and economical circuit for obtaining phase inversion and consequent elimination of the push-pull input transformer for a push-pull output stage is presented here. Voltage divider R_1R_2 makes 50 volts available at the grid of the inverter tube, and this voltage serves also as the plate supply for the input amplifier stage. This eliminates the customary separate load resistor with attendant decoupling filter resistor and capacitor, and gives considerable improvement in over-all operation.

The 5,000-ohm cathode bias resistor of the input stage, not bypassed, is a logical point for introduction of the feedback voltage. Without feedback, an input signal of 0.44 volt rms is all that is required to drive the 6L6 tubes to overload. With 17 db of feedback, the input requirements increase to 3.1 volts rms for maximum output. In the circuit shown, using two 500-ohm output transformer secondaries in shunt, the feedback resistor R_F will give 10 db of feedback when its value is 240,000 ohms; 100,000 ohms will give 17 db of feedback; 68,000 ohms will give 20 db; 52,000 ohms will give 22 db; 36,000 ohms will give 24 db. The amplifier is perfectly stable with 22 db of feedback.

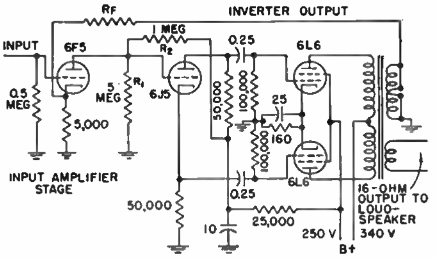

The output transformer has its two 125-ohm secondaries strapped in parallel to increase the available feedback due to the reduction in leakage reactance in the transformer and the consequent decrease in phase turnover.

C. G. McProud and R. T. Wildermuth, Phase Inverter Circuits, *Electronics*, October, 1940, p. 50.

Automatic Phase-reversal Circuit for Audio Amplifier

WITH the unsymmetrical wave forms that are characteristic of much speech and music, it is desirable in broadcast stations to have the peaks that have the greater magnitude modulate the carrier of the transmitter in the upward direction in order to permit the greatest possible coverage by the station without introducing distortion by overmodulation. The switching required for this can be achieved automatically with the circuit shown, which consists essentially of a normal line amplifier, a switching tube, and a push-pull amplifier whose function is to operate the switching tube in accordance with the polarity of the voltage at its output terminal. First consider the operation of the line amplifier with the 2A3 switching tube and push-pull amplifier disconnected. The signal voltage across the input of the line amplifier is e_g, and for the instantaneous voltages, as marked, the signal voltage at the grid will be negative with respect to that of the cathode. Now assume that the 2A3 switching tube is connected. For the moment we shall disregard the grid, or input, circuit and shall merely assume that plate current flows through this tube. The flow of plate current will set up a steady voltage across R_1, which will give a somewhat more positive bias to the line amplifier, but the signal voltage will remain unchanged. Thus the effect is the same as if the bias control were at the top instead of at N, so far as the instantaneous voltage on the input of the line amplifier is concerned. The function

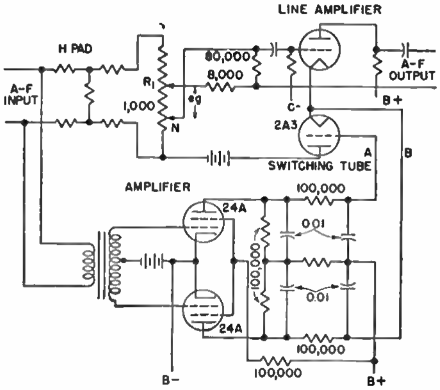

of the push-pull amplifier is merely to provide a convenient and automatic switching arrangement for the 2A3 switching tube.

For zero signal on the input of the push-pull tubes, terminals *A* and *B* are at the same potential, and consequently the 2A3 tube has zero bias. When a signal voltage is applied, one of the terminals becomes negative with respect to the other. If terminal *A* is relatively negative, the 2A3 tube is biased to cutoff, since only a low voltage is used on the plate of the 2A3. This mechanism automatically reverses the circuit so that the higher peaks will always modulate the transmitter upward, although for proper operation the position of the terminals *A* and *B* may have to be reversed.

The input circuit of the two 24A tubes must be a transformer to obtain proper operation of the push-pull amplifier. It should be noted that the screen grid of these tubes is not at ground potential and that no bypass capacitor from screen to ground should be provided. The plate battery of the 2A3 tube should be as low a voltage as possible so that a small grid voltage will cause the tube to conduct current or to produce cutoff. The 24A tubes are biased approximately to cutoff. The H pad reduces the voltage to the tube and voltage-divider network so that switching is done at a low audio level.

R. P. Crosby, Automatic Phase Reversal Amplifier, *Electronics*, October, 1941, p. 64.

Electronic Interlocking Circuit for Intercommunication without Switching

To make normal two-way conversation possible in an intercommunicating system without use of a talk-listen switch, the circuit shown employs two channels, with part of the signal from the active channel serving to reduce the screen-grid voltage of the amplifier tube in the other channel and thus lower its gain below the howling point. The entire changeover action takes place within the first few vibrations of the loudspeaker in the channel being used; therefore there is no objectionable clipping of syllables of the kind that occurs with magnetic voice-operated relays. A signal in one channel acts through a system of diode rectifiers to lower the gain of the other channel, and vice versa.

A 6J7 tube is resistance-coupled to a 25L6 tube in each of two amplifier circuits working in opposite directions. Each amplifier is standard with the exception that some energy from each of the outputs is fed to the control system and also that the second grid of each of the 6J7 tubes is used for control purposes. The driving grids of the 6J7 tubes have two sources of biasing potentials, a cathode resistor to ground (R_4 or R_{24}) and a constant grid voltage to ground supplied by potential divider R_{11}.

The second grid of either one of the 6J7 tubes is connected to a network and to the elements of a 6H6 tube in such manner that a positive potential is supplied to this grid when no sounds are being transmitted. This grid may be thrown more or less positive when sounds are transmitted, depending on which channel is active. The potential of the second grid of the 6J7 tube is raised to a certain fixed positive value very quickly when sound is being transmitted principally by that channel. The fixed positive value to which it is raised is determined and limited by another 6H6 tube whose plate is connected to the 6J7 second grid and whose cathode is connected to the desired fixed positive limiting potential. The potential of the second grid of the 6J7 tube is lowered to a certain fixed positive, or negative, potential instantly, when sound is being transmitted principally by the other channel. The fixed positive, or negative, value to which this 6J7 second grid is lowered is determined and limited by another 6H6 tube, the plate of which is connected to the desired fixed limiting potential.

The circuit for controlling the potential of the second grid of the 6J7 consists of three branch circuits, as shown in simplified form on the diagram. In the center branch, which is of high impedance and filtered, there is a fixed positive potential of, say, 1.5 volts represented by battery 1. In series with this is element 2, which normally is neutral but which may produce or tend to produce 150 volts of negative potential when the other channel is active. Also in series is element 3, which may produce or tend to produce 150 volts of positive potential when the channel of the 6J7 shown is the principal carrier. This 150 volts is considerably more than is required either positive or negative, but the voltage that actually tends to result on the grid is the algebraic sum of voltages 1, 2, and 3.

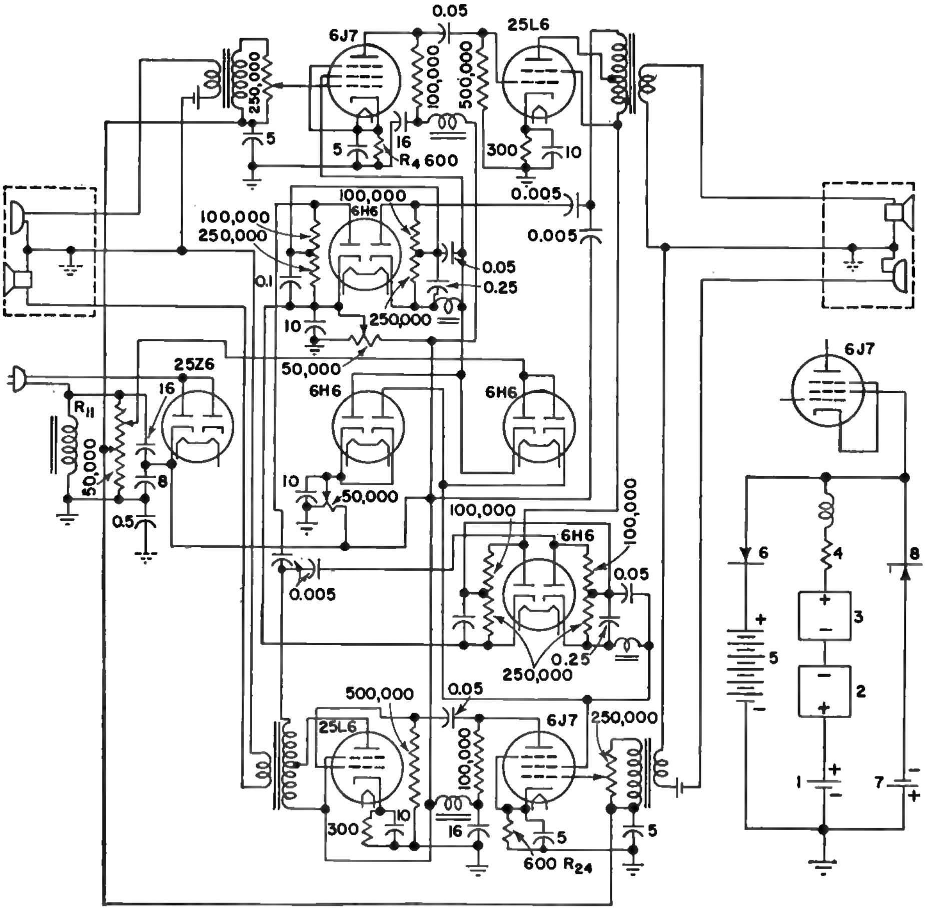

In the other branches, 5 is a battery, which would place a positive potential of 15 volts on the grid, but because of rectifier tube 6 no current would normally flow. Likewise, 7 is a battery that would place a negative potential of 1 volt on the grid, but because of rectifier 8 no current would flow.

Now assume that the channel containing this 6J7 tube is very active and that unit 3 tends to generate 150 volts positive. The grid cannot go more positive than battery 5, or current will flow through rectifier 6 in its normal direction, so that there is a tendency to charge battery 5. Similarly, when battery 2 generates 150 volts negative, the grid cannot go more negative than battery 7, or current will then flow through rectifier 8 in its normal direction, so that there is a tendency to charge battery 7. Since elements 5 and 6 of one circuit and 7 and 8 of the other are of low impedance, they definitely place limits to grid voltage of +15 volts and −1 volt or whatever other limits are desired.

When neither channel is active, the voltages of 2 and 3 soon become zero, and the grid then floats at the intermediate voltage of battery 1. The impedance of the rectifiers in the reverse directions are practically infinite, so that the voltage of the grid between the limits of +15 and −1 is unaffected by the limiting tubes.

Harold J. McCreary, Electronic Interlocking for Intercommunicators, *Electronics*, September, 1941, p. 30.

Automatic Fader Circuit for Sound Systems and Broadcast Studios

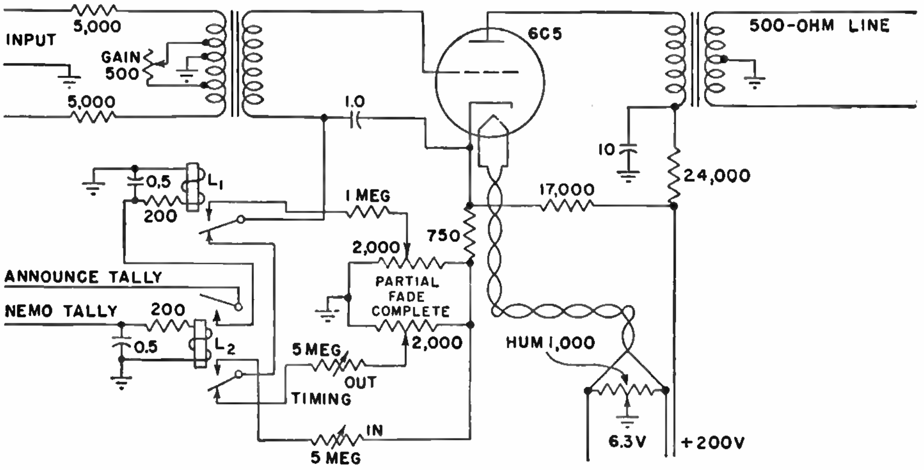

This circuit operates from the nemo and announce tally lights in a broadcast studio, plus an installed fade key and tally. It will automatically fade a program either completely or partly in or out at a predetermined rate without the use of motors. The only moving parts are three relays, and the timing for individual fade-in and fade-out rates is easily adjusted.

The fader is essentially an amplifier adjusted for zero gain, with time-delayed bias for control. The amplifier tube is biased to cutoff for complete fade-out, at an intermediate point for partial fade-out or fade-in, and normal for complete fade-in. The bias is obtained from the two potentiometers in the bleeder circuit.

Two variable timing controls are included (slotted shaft for screw-driver adjustment), one for complete fade-out and one for complete fade-in. Timing of a complete fade is adjustable from 1 to 15 seconds. The timing for the background level, or partial fade, is fixed at approximately 2 seconds.

The 6C5 is operated at a plate current of 0.5 to 0.6 ma to obtain a smooth fade. This quiescent point places the operation of the tube slightly above the point where the amplification begins to vary. This imposes a definite limitation on the maximum permissible input level at which the fader may be operated without distortion. The input is 10,000 ohms bridging, while the output is 500 ohms.

Relay L_2, which gives complete fades, obtains its battery from the nemo tally light. The partial fade, or background-level, relay L_1 connects to the battery supplying the announce tally through a contact on relay L_2. This allows a background level only when both announce and nemo are set up. It was found that a partial fade of 10 db of tone (500 cycles) gave a good background level. The level is adjustable to −58 db.

Dan Hunter, Automatic Fader, *Electronics*, October, 1945, p. 119.

Speech Scrambling and Unscrambling Circuit Using Balanced Modulator

For scientifically scrambling the human voice to secure secrecy during transmission by radio or over wires, this frequency-inverter circuit employs what is essentially a Hartley balanced modulator, or demodulator, in which a pair of triodes is connected to produce certain frequencies and to suppress other frequencies.

Since the inverted speech will occupy the same frequency range as the original speech, but in reverse order, it is essential for complete privacy that the original voice currents do not appear in the output. This is achieved to a high degree in the balanced-modulator stage, provided that the two tubes are identical and that the circuit is properly balanced.

In creating inverted speech, normal voice frequencies are caused to modulate a constant audio frequency (inverting frequency) to produce frequencies that are combinations of the speech frequencies and the inverting frequency. These frequencies will include an upper and lower side band which are, respectively, the inverting frequency plus the voice frequencies and the inverting frequency minus the voice frequencies. If the inverting frequency is just above the highest essential voice frequency, the lower side band will be an inverted picture of the original input voice frequencies, so that the low frequencies become highs, and the high frequencies become lows.

By using an inverting frequency of 3,000 cycles, an input frequency of 200 cycles will become 3,000 minus 200, or 2,800 cycles in the difference-frequency band. A 2,500-cycle input will become 500 cycles, and all other input frequencies will be inverted correspondingly. The upper side band is representative of the original input frequencies raised up in the spectrum by the value of the inverting frequency. In actual practice of secret telephony, this upper side band is attenuated by filters, and only the inverse-frequency band is used for transmission.

Two high-impedance input circuits are provided so that the unit can be used in conjunction with two short-wave receivers for unscrambling transoceanic telephone conversations. Two receivers are necessary if one wishes to hear both sides of a conversation.

The output impedance is 500 ohms looking directly out of the low-pass filter. The two output jacks permit the use of two pairs of 250-ohm impedance headphones connected in series.

The 6C5 input amplifier is really a mixer stage to couple the outputs of two radio receivers to the modulator input transformer T_1. The transformer must have low distributed capacitance and low capacitance between windings, and the center tap on the secondary cannot be taken from within a winding. Two leads must be brought out from separate sections of coils to provide magnetic and inductive balance. Controls R_7 and C_5 are provided to compensate for any inequalities present. The function of R_8 is to provide for balancing the plate currents of the two 6C5 modulators. All these controls are used to balance out of the output circuit the incoming speech waves and the inverting frequency from the 6C5 oscillator. Preliminary balancing can be aided by careful selection of the two 6C5 modulators and by interchanging them during the process of balancing. The half of the secondary across which capacitor C_5 must be shunted can be determined only by experiment.

Transformer T_2 is a standard plate-to-line transformer, and any good make will serve the purpose.

The low-pass filter is of the *m*-derived type to provide for suppression of the upper side band produced by modulation. The a-c resistances of the various coils should be as low as possible if sharp discrimination between the unwanted frequencies and the pass frequencies is to be obtained.

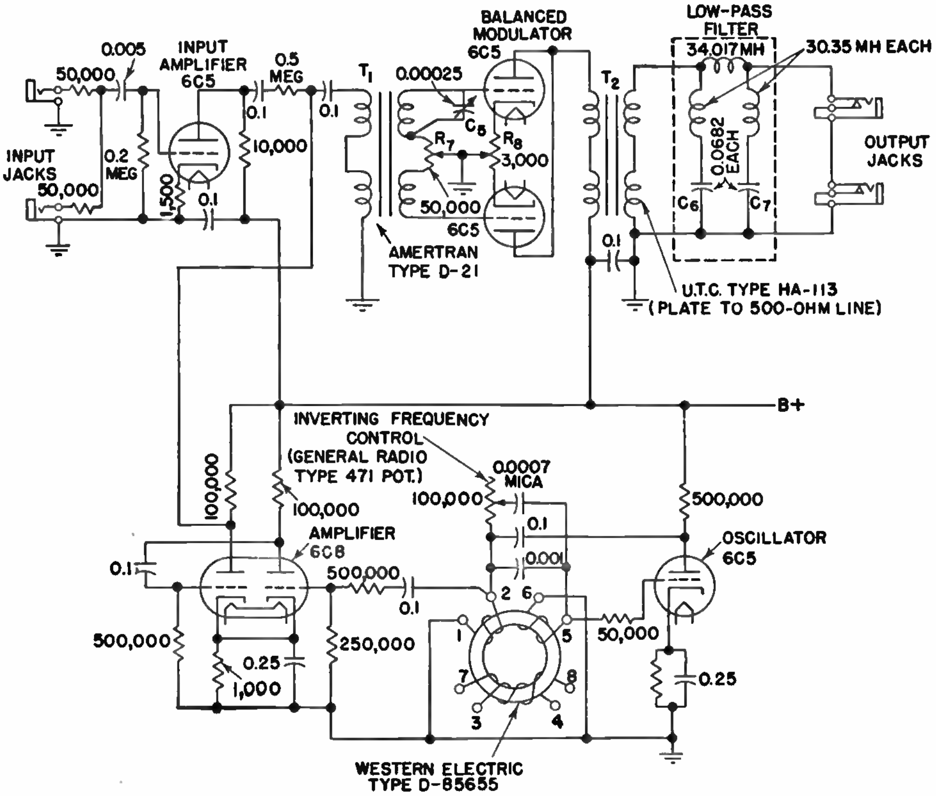

The capacitors can be a paper dielectric type because of the relatively low frequencies involved. The odd values for C_6 and C_7 can be stacked up from standard capacitors in parallel. The inductances should be treated with wax or other moisture-resisting material and should be shielded from each other or spaced by their own diameter and placed alternately at right angles.

The 6C8 amplifier is perfectly straightforward and is for amplification of the inverting frequency from the 6C5 oscillator. The frequency is controlled by a variable resistance and capacitor in series. A frequency of 3,000 cycles is provided with the control near the center position. A Wien-bridge or any other well-known type of oscillator may be used to supply the inverting frequency.

In operation, the inverter may be used both for scrambling and unscrambling. If desired, two units may be placed at either end of a two-way circuit with the usual balanced hybrid coils, to provide a complete privacy system for two-way telephone communication.

William W. Roberts, Speech Scrambling Methods, *Electronics*, October, 1943, p. 108.

Circuit for Indicating Vibration Visibly and Audibly

THE circuit shown is essentially a two-channel audio amplifier for indicating the presence of excessive vibration, both audibly with a loudspeaker and visually with a neon lamp. Though designed primarily to assist in adjusting and testing gyroscope-rotor assemblies, it has many other industrial uses. As one example, it is valuable in eliminating dynamic unbalance in gyro rotors. When used in connection with an electronic tachometer and accelerometer, rotors can readily be adjusted and balanced so precisely that it is virtually impossible to ascertain by touching or listening to the rotor whether it is stationary or revolving.

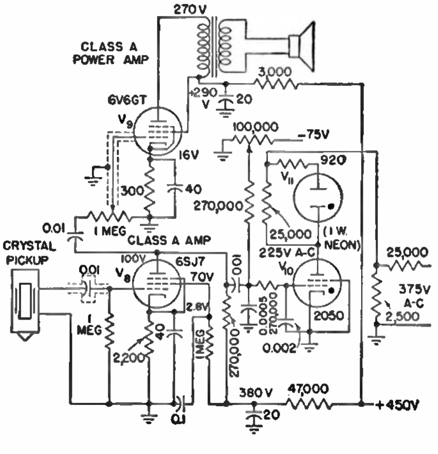

The rotor under test is mounted in a fixture and is rotated at a fairly high speed by means of an air jet impinging on its vanes. A phonograph type of crystal pickup placed on the gyro frame converts vibrations into a signal that is fed to the grid of V_8, operating as a conventional class A voltage amplifier. The output of this amplifier divides into two branches. One branch drives a conventional power amplifier V_9, which operates a loudspeaker to give audible indications of vibration present in the gyro rotor.

The second branch is used to provide visual indication when vibration of the gyro rotor exceeds a specified amount.

Output from voltage amplifier V_8 is fed into the input stage of the peak-discharge circuit employing a gas tetrode V_{10}. When the grid of the gas discharge tube exceeds a stipulated value, the tube breaks down and illuminates the neon peak-vibration indicator lamp V_{11}. In this way, excess vibration of the gyro rotor is converted into a visual warning.

An Electronic Tachometer, Accelerometer and Vibrometer, *Electronics*, June, 1944, p. 100.

Wien-bridge Audio Oscillator Providing Ten Spot Frequencies

A SELECTOR switch provides instantaneous choice of 10 frequencies in the audio range from 20 to 20,000 cycles in this simple switch-tuned *RC* oscillator, popularly known as a Wien-bridge oscillator. By careful matching of pairs of resistors, good wave form and uniform output amplitude are achieved. The arrangement is useful for measuring a-f-amplifier frequency response and for wave-form and distortion measurements. Frequency of oscillation is determined by the values of *R* and *C* ($f = 1/2\pi RC$), and the accuracy of frequency will be as good as the accuracy of the *R* and *C* values. The members of each pair of resistors should be equal as checked with a bridge or ohmmeter.

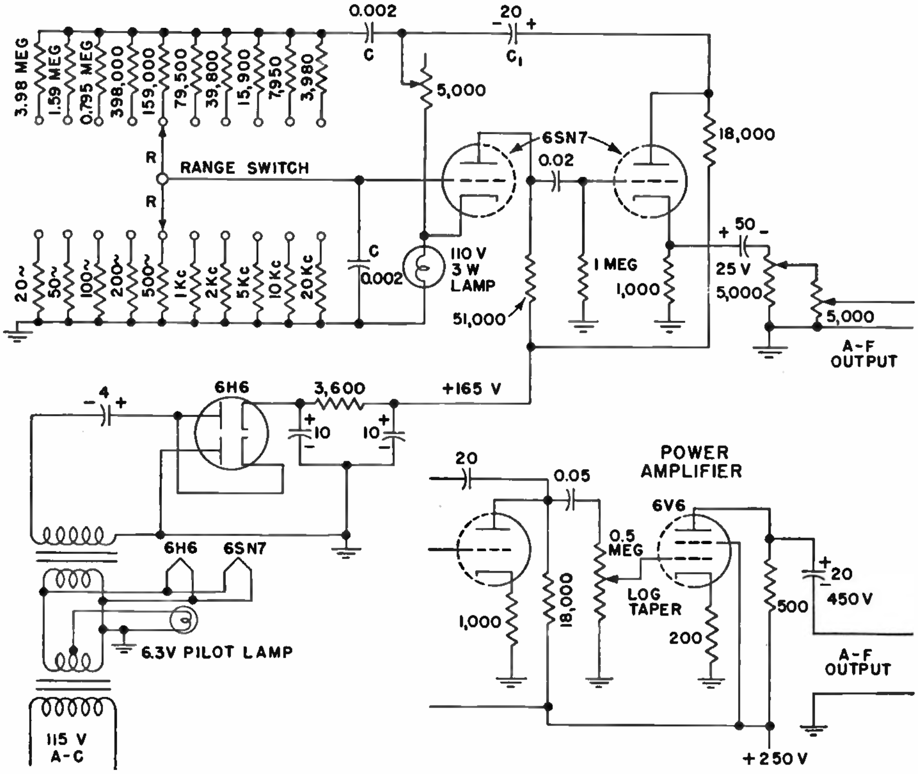

A 6SN7 provides the two triodes that are necessary for the oscillator, and a 6H6 is used as a half-wave voltage doubler to provide the 165-volt B supply needed by the oscillator. Two filament transformers are used back to back to provide filament voltage and line isolation for the B supply. The first transformer has a 2-ampere winding to supply filaments as well as to drive the second (1-ampere) plate transformer. Connecting the pilot light across only half of the 6.3-volt winding eliminates annoying glare but still provides ample visibility.

Output is taken from the amplifier cathode so that loading will not affect oscillation. The amplitude will be about 2 volts peak. A double attenuator is used to make possible vernier adjustment of low levels for such applications as speech amplifiers. Oscillation amplitude is determined by the proportion of output voltage fed back through C_1. If more output is desired, the alternative power-amplifier arrangement shown may be used. This calls for boosting the plate-supply voltage on all tubes to 250 volts.

Howard T. Sterling, A Simple Wien Bridge Audio Oscillator, *QST*, October, 1946, p. 29.

Circuit for Producing A-F Response Curves on Cathode-ray Screen

THE circuit described here gives a continuous curve of the response characteristic of an audio amplifier or of any acoustic device on a standard cathode-ray oscilloscope screen.

The main parts of this device are a saw-tooth oscillator and a beat-frequency oscillator. The saw-tooth oscillator, used at a frequency of approximately 30 cycles, supplies a linear sweep voltage to a frequency-control tube and simultaneously moves the cathode-ray beam across the horizontal axis. The beat-frequency oscillator is arranged so as to have its variable oscillator (which is normally varied at the control of the operator) left unchanged and adaptable to its usual purpose. The fixed oscillator is frequency-modulated at the frequency of the saw-tooth oscillator by the action of the control tubes. Thus a variable a-f wave is generated.

The setting of the variable oscillator establishes the lowest frequency from which the audio output can sweep, and the sweep range is determined by the setting of the control tube and the auxiliary circuits. Thus the oscilloscope screen is not limited to a picture starting at zero frequency, for any portion of the audio range can be instantly segregated for examination.

This change of frequency of the fixed oscillator is accomplished in a manner analogous to that used in automatic-frequency-controlled superheterodyne receivers. The value of the received signal alters the grid potential of a control tube, which in turn is coupled to the oscillating circuit in such a manner as to change its frequency slightly and thereby tune the set more accurately to the signal being received. In both systems the control-tube plate circuit is connected in parallel with the oscillator coil. The effective inductance of this coil is changed by altering the dynamic tube characteristic through the action of the control grid. The amount of control is established by the value of the bias potential applied to this grid.

The control tube in this system generates out-of-phase currents in its plate circuit by the action of a phase-changing network connected between the plate and a grid. The amount of inductive control is varied by applying the discharges of the saw-tooth oscillator through suitable range-control circuits. If these functions are all arranged for control by one grid, undesirable interaction occurs between the circuits having the different functions. A pentagrid tube (6L7) is therefore used. In this tube a screen separates the two control grids and thus eliminates interaction between them.

The range of frequency change is controlled by varying the mutual conductance of the control tube. This is accomplished by varying the bias of the first grid, which has a remote cutoff characteristic. The instantaneous frequency is determined by the out-of-phase signal fed back from the oscillator tank circuit through the phase-shift network to the third grid. If the tube is biased to cutoff, it causes no change in the tank-circuit inductance. Reducing the bias of the control tube's first grid increases its mutual conductance, thereby shunting the inductance of the coil with an apparent inductance and raising the frequency of the fixed oscillator.

It is usually desirable to have a logarithmic spread of the frequency spectrum on the cathode-ray screen. This can be obtained by varying the bias of the control tube in linear saw-tooth fashion and using a tube whose mutual conductance changes substantially logarithmically with grid bias. The output frequency of the audio oscillator approximates a straight-line function of the mutual conductance. The frequency will then vary logarithmically with time. By using the same saw-tooth wave as the oscilloscope sweep, we obtain logarithmic spread of frequency on the oscilloscope screen.

The output of the signal generator will rise from a low frequency to a higher frequency if the first grid is biased to cutoff and if the phase of the sweep voltage applied to the first grid of the control tube is so chosen that it rises from a negative to a positive value. By changing the tube parameters and circuit constants, the system can be varied from a logarithmic to a nearly linear frequency spread on the oscilloscope.

In order to secure a good frequency range, a beat oscillator was chosen whose tank-circuit frequency could be widely varied with only a small change in inductance. Uniform a-f response characteristics are also desirable.

The range of a-f sweep is controlled by varying the alternating voltage on the first grid. This voltage has a saw-tooth wave form going positive and negative about a biasing value equal to half of the peak value subtracted from the cutoff voltage. This biasing potential must be varied in order to keep the minimum frequency of the fixed oscillator constant and to have it occur simultaneously with the peak of the saw-tooth wave. A multiple potentiometer system was developed, by which the bias of the first grid is varied in suitable proportion to the magnitude of saw-tooth potential applied. The range of sweep may be varied from very low values to 15,000 cycles.

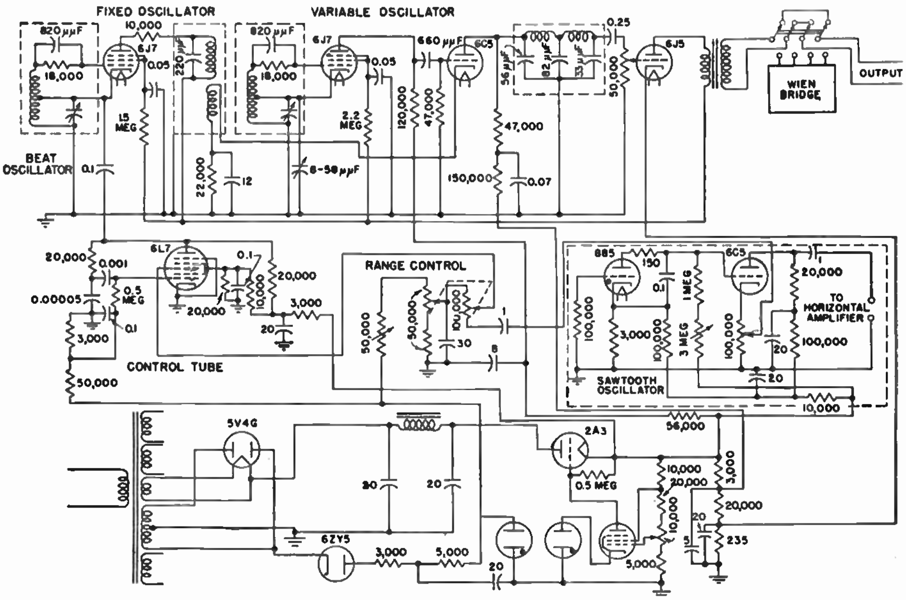

The frequency of the saw-tooth oscillator in the instrument described is approximately 30 cycles. This frequency gives a good clean picture on the standard medium-persistence-screen cathode-ray tube. With the 30-cycle saw-tooth oscillator frequency, the low usable limit of the instrument is approximately 100 cycles. In order to examine frequencies of lower value, a slower sweep frequency can be provided for use with a long-persistence cathode-ray screen.

The calibration of the instrument, dynamically, can be accomplished easily by the use of a Wien bridge connected between the output of the signal generator and the vertical plates of the cathode-ray tube. The bridge can be calibrated at fixed frequencies, and when it is placed in the output circuit, it will show a sharp narrow V notch at the frequency points to be determined. With the range control set to sweep from zero to 10,000 cycles, the midpoint of the cathode-ray screen was found to be 1,000 cycles, indicating a very close approximation to a logarithmic frequency scale.

The modulator is provided with two output connections. One set of connections is made directly to the horizontal amplifier terminals of the oscilloscope. The other set of connections, provided with taps at various impedances, supplies the varying audio signal. This is connected to the amplifier under test, the output of which is connected to the vertical amplifier of the cathode-ray oscilloscope.

This instrument has been found useful for testing all types of electrical and acoustical instruments, both in the laboratory and on the production test floor. The testing of microphones, receivers, filters, and amplifiers is rapid and accurate. The instrument can be used for comparison of the product with a standard by a single switching system. One instrument has sufficient power to operate several test positions, each using a separate oscilloscope.

S. F. Carlisle, Jr., and A. B. Mundel, Frequency Response Curve Tracer, *Electronics*, August, 1941, p. 22.

Portable Reverberation Meter Measures Acoustic Value of Room

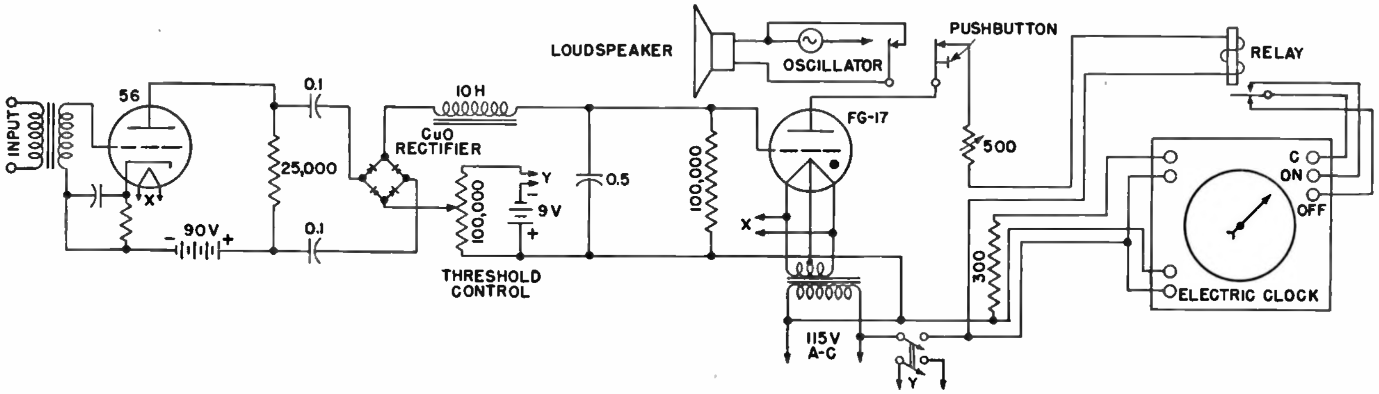

The circuit shown is a portable electrically operated reverberation meter designed to measure directly the rate of decay of reverberant sound in decibels per second. The complete apparatus includes the reverberation meter proper and a General Radio noise meter (which together constitute the actual measuring equipment) and a sound source.

The reverberation meter and noise meter together constitute in effect an electric ear having a threshold which can be varied by 10-db steps and a timing device which measures the time required for reverberant sound to die out from its initial value at the instant of cutoff to the particular threshold chosen. By plotting the time intervals as abscissas against the corresponding values of threshold settings in decibels as ordinates, a series of points is located which, when joined by a straight line of best fit, gives directly the slope of the decay curve. The reverberation time as defined is therefore the time interval along the horizontal axis corresponding to a range of 60 db along the vertical axis.

The reverberation meter consists of a stage of amplification of conventional type followed by a small copper-oxide rectifier and a low-pass filter section. These two elements convert the a-c output of the amplifier tube to a steady positive d-c voltage on the grid of the thyratron. A variable negative bias furnished by the C battery and potentiometer is superimposed on the positive voltage so that their resultant algebraic sum is the effective voltage controlling the plate current of the thyratron. This plate current will flow only when the positive voltage due to the sound input is high enough to make the total grid voltage more positive than the discharge potential of the tube, in this case approximately −2 volts. The variable negative bias serves as a threshold control supplementary to the 10-db step attenuator, since the more negative this bias, the more positive must be the sound input voltage to cause the tube to discharge. By this means it is possible to set the threshold of the entire system just above the noise level existing in the room under test.

The plate current of the thyratron operates a relay that in turn controls the starting and stopping mechanism of the clock. This is a Leeds & Northrup synchronous timer having a very rapid and positive clutch mechanism operated by a pair of opposing magnets. The clock movement is operated by a standard synchronous clock motor and is geared to complete one revolution in 10 seconds. The dial is graduated in tenths of a second and may be easily estimated to hundredths. The pushbutton in the plate circuit of the thyratron is arranged to turn on the sound source and to break the plate circuit simultaneously when pressed, and when released to cut off the source and close the plate circuit, thus allowing the clock to start the instant the source is stopped.

The plate of the thyratron will automatically be turned on and off as the grid voltage is varied back and forth through the critical value. Under field conditions the decay of sound energy actually takes place with rather wide fluctuations about an average straight line, owing to the interference pattern in the room, so that the sound intensity may pass through a given value several times before finally decreasing below that value. Owing to the automatic on-and-off action of the thyratron, the clock integrates the total time during which the sound intensity has a value above the threshold, thus tending to average out the fluctuations in the decay curve.

The loudspeaker is first set up at a position corresponding to that of the sound source in the normal use of the room. The 10-db step attenuator of the noise meter is set to its lowest value of attenuation, *i.e.*, the lowest threshold obtainable, and the potentiometer (marked threshold control) which varies the fixed bias on the thyratron is adjusted so that the voltage on the grid produced by the small amount of noise in the room is barely insufficient to cause the thyratron to discharge. This setting must be left unchanged during any one series of 10-db steps along the decay curve. The sound source is turned on for a few seconds by pressing the pushbutton, and on releasing it, the clock registers the time of sound decay to the threshold. The attenuator is then set 10 db higher, and a shorter time is obtained to this higher threshold.

By setting the attenuator to successive steps until the threshold is brought higher than the initial sound level itself, in which case the clock does not operate at all, a series of points along the decay curve is obtained. A single series of points will normally deviate widely from a straight line because of the fluctuations of the sound decay mentioned above. By taking a number of readings and changing the position of the microphone between each series, these deviations will be largely eliminated, and the average values obtained will fall approximately along a straight line. Closer approximation may be obtained by increasing the number of microphone positions or by using a warbled instead of a steady frequency.

Hale J. Sabine, Portable Reverberation Meter, *Electronics*, March, 1937, p. 30.

Audio Noise Meter, Using Vacuum-tube Voltmeter Circuit, Attaches to Any Receiver

This circuit has been used for quantitative tests of noise components in aircraft radio equipment. The instrument consists of a vacuum-tube voltmeter that is connected to the regular receiver in the plane. This eliminates switching problems and permits the measurements to be made from points where interference is being generated, remote from the receiver.

The instrument indicates the quasi-peak value of the noise signal rather than the rms value, since only the nuisance value of the noise signal present in the audio output of the receiver is of interest. The proper response is accomplished by the use of a resistance-capacitance network that requires a 10-millisecond charge time and a 600-millisecond discharge time in accordance with the standard time constant for noise-measuring instruments.

To prevent a false reading by a signal from a radio station that may be inadvertently tuned in, the audio signal is monitored at the input of the noise meter by headphones inserted in the jack provided. This is also of value in identifying the source of radio noise, since certain units of noise-producing equipment in aircraft cause a characteristic audio signal in the receiver.

A starting point in the measurement of radio noise is the evaluation of the background level of the receiver with all noise sources inoperative, the receiver antenna lead disconnected, and the antenna terminal grounded to the receiver chassis through a capacitor whose value equals that of the antenna. The background level is then determined throughout the frequency range of the receiver. The relative noise outputs of the various electric devices in the plane may be measured and steps taken to reduce the coupling paths to the receiver.

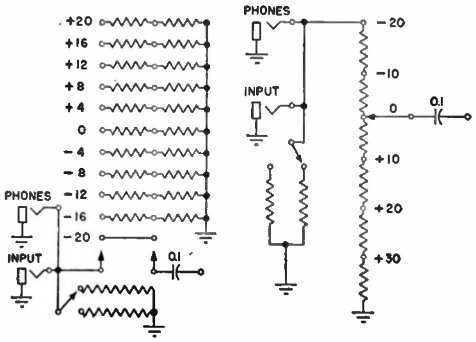

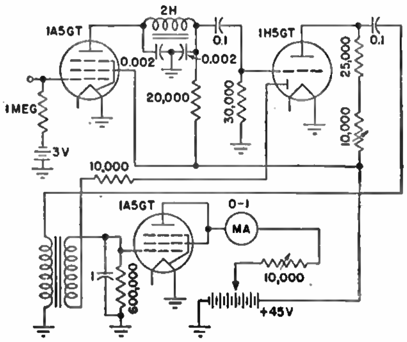

For measurement of ignition noise reaching the receiver via the antenna, the background level is measured with the antenna and lead-in connected normally. In this case it must be remembered that the atmospheric noise level is the limiting background level. If noise from equipment inside the plane is reduced to the atmospheric noise level in one location, it may be above the atmospheric noise level in another location.

The circuit includes a filter to limit the frequency response of the instrument to the audio range necessary for intelligible transmission of speech. The meter is calibrated in decibels using a 0-db reference level of 1 milliwatt in 600 ohms. An input attenuator circuit is shown that extends the full-scale range of the meter in steps of 4 db.

An alternative attenuator circuit that provides steps of 10 db is also given. High sensitivity is used to indicate the background level of the receiver used in conjunction with the meter, since this is one factor of the basis on which quantitative audio noise measurements are made.

Noise Meter for Planes, *Electronics*, February, 1944, p. 161.

CAPACITANCE CONTROL CIRCUITS

Capacitance-responsive Circuit for Detecting Small Mechanical Movements

MECHANICAL movements as small as a millionth of an inch can be detected with this circuit by converting them into capacitance changes of the order of 0.01 μμf. The movement is utilized to change the capacitance between a fixed and moving plate. This varying capacitance is connected between an r-f oscillator and an r-f amplifier, producing a corresponding change in output that can be measured, recorded, or made to actuate a relay. Accuracy is high because variations in oscillator and cable characteristics are nullified.

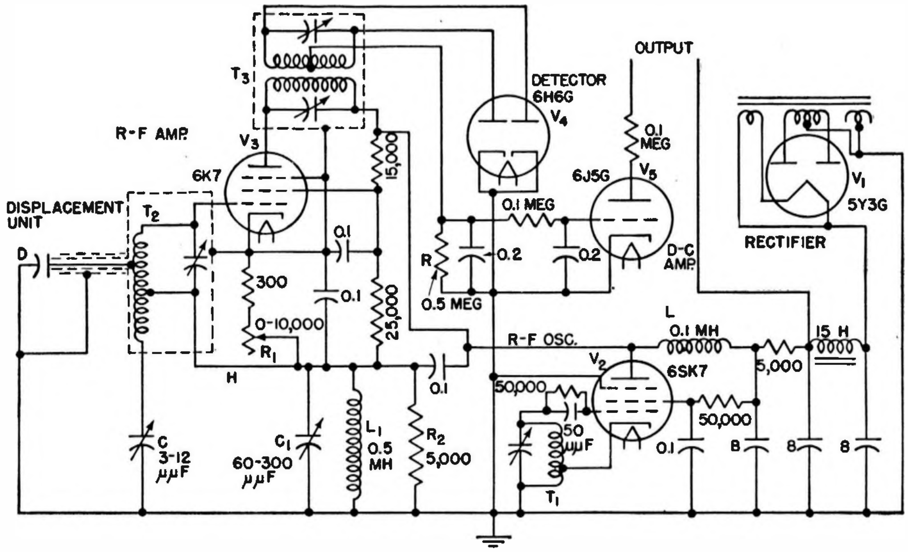

Oscillator tube V_2 holds its plate and line H at an r-f potential with respect to ground. The first tube of the amplifier V_3 derives its plate supply from these lines. Displacement unit D is connected between ground and a tap on the coil of tuned input circuit T_2.

The impedance of D is high compared with the impedance of the tapped center section of tuned circuit T_2, and therefore the r-f current flowing through these impedances is essentially proportional to the capacitance of D. This current causes an r-f voltage difference between the grid and cathode of V_3, and a corresponding r-f plate current flows through T_3. The resulting induced r-f voltage in the secondary of T_3 is rectified in full-wave detector V_4. The d-c potential thus obtained across 0.5-megohm resistor R is filtered and applied to the grid of V_5. The plate current of V_5 can be fed to a meter, recording galvanometer, oscilloscope, or relay.

The lead between displacement unit D and tuned circuit T_2 is surrounded by two shields. The inner shield is connected to the cathode of V_3 because a grounded shield around that lead would form an undesirable capacitance in parallel with the displacement unit. The inner shielding is surrounded by an outer grounded shield to eliminate radiation and to diminish changes in capacitance between inner shielding and ground when the flexible cable is moved.

The at-rest capacitance of the displacement unit can be compensated by variable capacitor C, which is connected between H and ground through a coil coupled to T_2 in the proper direction. The gain of the amplifier can be controlled by R_1.

The circuit was designed to be insensitive to changes in capacitance between lead and inside shielding (of the order of 1 μμf for an unusually severe punishment) and to changes between inside shield and outside shield (of the order of 10 μμf for an unusually severe punishment).

The oscillator is of the electron-coupled type, so that detuning of the plate circuit does not affect the frequency of oscillation. The r-f voltage obtained at the plate is proportional to the plate load impedance, however. To make this voltage independent of the capacitance between inner and outer shielding (which forms part of the plate-to-ground capacitance), r-f chokes L and L_1 and adjustable capacitor C_1 are tuned to the frequency of oscillation, and the resonant impedance of this tuned circuit is artificially decreased by resistor R_2.

The oscillator signal is fed to a tap rather than to the top of tuned circuit T_2 because any changes in capacitance between lead and inner shielding are reflected to the top of the tuned circuit in proportion to the square of the ratio of turns. In addition, if a tuned circuit is detuned slightly, its impedance varies in proportion to the square of the detuning capacitance. Accordingly, the effect of changes in the capacitance between lead and inner shield will decrease with the fourth power of the ratio of turns. At the same time the input sensitivity will decrease in proportion to the ratio of turns (the impedance of D being higher than the resonant resistance of T_2).

If a substantial power output is necessary, the output tube can be fed from a separate power pack, or a class A push-pull arrangement can be used in which the plate current of one tube increases by the same amount as the plate current of the other tube decreases.

Applications include recording of blood-pressure curves, checking eccentricity of rotating shafts, detecting small pressure variations in internal-combustion engines, and detecting deformation due to stresses in machine or structural parts.

Joseph C. Frommer, Detecting Small Mechanical Movements, *Electronics*, July, 1943, p. 104.

Simple A-C Powered Capacitance-operated Relay

IN this a-c circuit, the sensitive element is a pentode oscillator, the feedback of which is determined by the difference in the ratio between the inductances of the two parts of the oscillator and the ratio between C_1 and the antenna-to-ground capacitance C_2. The intensity of oscillation varies with a change of C_1 or C_2. As the cathode of the oscillator is at an r-f potential, and as the control grid of the output tube is bypassed for high frequencies to the cathode, a negative d-c voltage equal to the peak r-f voltage on the cathode of the 6J7 will be across the grid leak and capacitor owing to the rectifying action of the grid of the 25A6, and it will thus appear on the grid of the 25A6. The 6J7 oscillates at high frequency on one half of the a-c cycle and builds up this negative charge on the grid of the output tube. During this time the output tube has negative plate voltage and is nonconducting. On the other half of the a-c cycle the 6J7 oscillator has negative plate voltage and therefore ceases oscillating. The negative charge on the grid of the output tube does not have time to leak off during this interval, and hence it is effective in controlling the plate current of the output tube, the plate voltage of which is positive during this interval.

This type of circuit finds its application in connection with such devices as door openers and counters and has even been used as a foul-line indicator for bowling alleys.

F. H. Shepard, Jr., Capacity Operated A-C Relay, *Electronics*, June, 1936, p. 34.

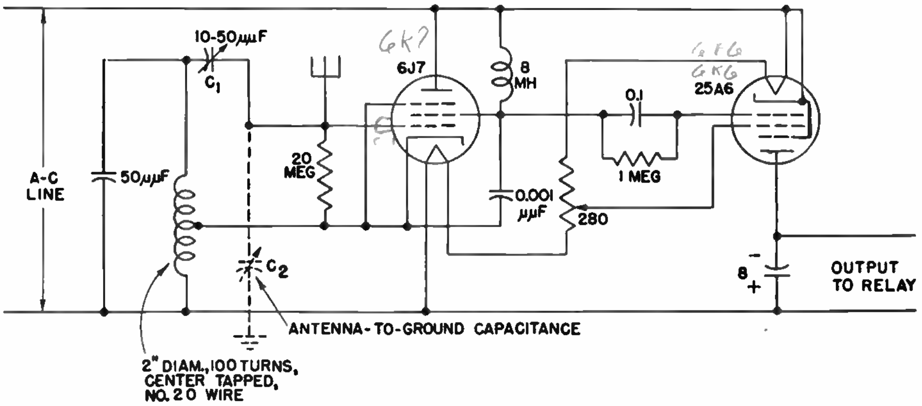

Universal A-C/D-C Capacitance-operated Relay for Alarm and Control

The type 85 tube in this circuit is connected as a Hartley oscillator whose feedback—and hence intensity of oscillation—is controlled by the amount of capacitance between the feeler antenna and ground. The feedback is a function of the difference in the ratio between the two parts of the oscillator and the ratio between capacitances C_1 and C_3. As either of these capacitances is varied, the feedback is varied smoothly from a negative value through zero to some maximum positive value, and the intensity of oscillation is varied from zero to a maximum.

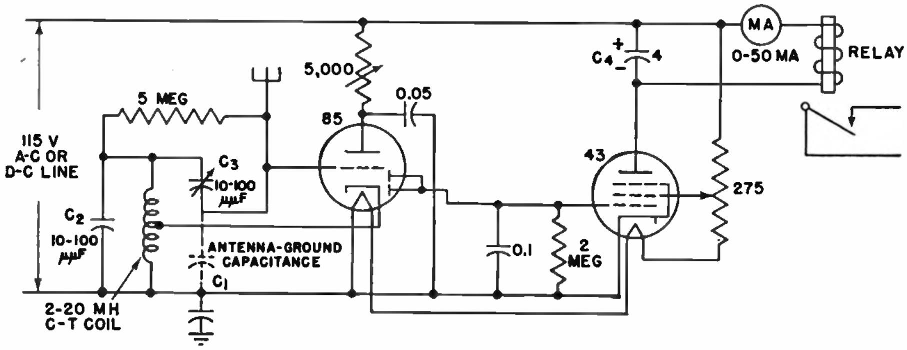

The diode section of the tube develops a voltage equal to the peak oscillator voltage present between the cathode of the oscillator and ground. This negative d-c voltage is fed to the grid of a power output tube that can be used to actuate a milliammeter and/or operate a relay. The diode is grounded for the oscillator frequency through a 0.1-μf capacitor. The relay may have up to 5,000 ohms resistance and requires a shunt capacitor only for a-c operation of the circuit; the value of C_4 may be from 0.5 to 8 μf depending on what is required to stop chatter with the relay used.

This circuit is sufficiently sensitive so that wiggling a finger about 5 feet from the antenna wire will cause as much as a 3-ma variation in output current. Uses for the circuit include operating an advertising display upon approach of a prospective customer, operating a door opener or burglar alarm, or safeguarding a danger area of a machine.

F. H. Shepard, Jr., Miscellaneous Applications of Vacuum Tubes, *Proc. Radio Club of America*, June, 1935, p. 3.

Self-balancing Capacitance-operated Relay Circuit

Where it is desired to operate a relay only on a change of capacitance occurring within a period of several seconds, duration, the accompanying circuit is advantageous. Though the actual antenna-to-ground capacitance may drift considerably over long periods of time due to temperature and humidity changes, the circuit will automatically rebalance itself after a short period of time.

The sensitive element consists of a pentode oscillator, the feedback of which is determined by the difference in the ratio between the inductance of the two parts of the oscillator coil L_1 and L_2 and the ratio between C_1 and the antenna-to-ground capacitance. Because the cathode of the oscillator is at an r-f potential, and because the control grid of the output tube is bypassed for high frequencies through suitable bypass capacitors to the cathode of the oscillator, a negative d-c voltage equal to the peak r-f voltage on the cathode of the 6J7 is built up across the grid leak and capacitor of the 25L6 due to the rectifying action of the grid.

The 6J7 oscillates at high frequency on half of the a-c cycle and builds up the negative charge on the grid of the output tube. During this time, the output tube has negative plate and screen voltages and thus is nonconducting. On the other half of the a-c cycle, the 6J7 oscillator has negative plate and screen voltages and thus ceases oscillating. The negative charge on the grid of the output tube does not leak off during this interval, and hence it is effective in controlling the plate current of the output tube during its positive plate-voltage interval.

The lower the losses in the oscillating circuit, the greater will be the sensitivity. Theoretically, as the oscillator plate impedance approaches infinity and the losses in the antenna and the tuned circuit approach zero, the sensitivity approaches infinity. Sensitivity gained in this manner is much more stable than that gained by regeneration.

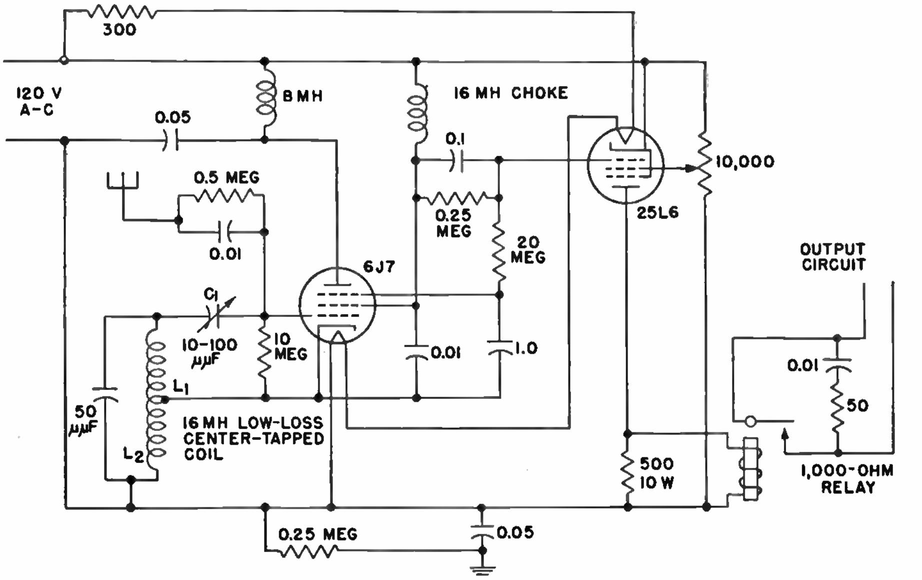

The sensitivity to small changes in capacitance can be increased by increasing the resistance of the choke coil feeding the screen of the 6J7. When this resistance is more than about 15,000 ohms, however, the circuit will become unstable. The increase in sensitivity is caused by the fact that as the intensity of oscillation of the 6J7 increases, its plate and screen currents decrease. This causes the screen voltage and hence the mutual conductance of the 6J7 to increase; the increase in turn helps to increase the intensity of oscillation.

Chattering of the relay can be effectively eliminated by the damping resistor placed across the relay coil. If desired, the resistor can be replaced by an electrolytic capacitor large enough to keep the relay from chattering (8 μf for most relays).

The intensity of oscillation is automatically controlled by feeding a negative potential to the No. 3 grid of the 6J7. This potential makes the grid negative with respect to the cathode, reduces the mutual conductance of the tube, and reduces the plate impedance of the tube that is effectively shunted across the lower part of the tuned circuit. Both of these actions tend to reduce the amplitude of oscillation for a given feedback, or make the oscillator require a greater feedback for a given intensity of oscillation.

As the negative potential applied to the No. 3 grid of the 6J7 is derived through a time-delay circuit from the grid of the output tube, this grid assumes a direct potential equal to the peak high-frequency voltage appearing across the lower half of oscillator coil L_2. Thus the intensity of oscillation is maintained substantially constant for wide variations in antenna-to-ground capacitance (feedback). The above is true for slow capacitance variations; sudden variations cause the intensity of oscillation to vary rapidly before the corrective voltage can be applied through the capacitor-resistor time-delay circuit to the No. 3 grid of the 6J7. Short-time capacitance variations are therefore effective in operating the relay, while long-time variations within limits are automatically compensated for.

This circuit finds application in connection with such devices as door openers, counters, burglar alarms, and advertising displays.

F. H. Shepard, Jr., Some Unconventional Vacuum Tube Applications, *RCA Rev.*, October, 1937, p. 149.

Stabilized A-C Capacitance-operated Relay for Control Purposes

HERE is a stabilized capacitance control circuit that operates directly from an a-c line for burglar protection, counting and sorting of metallic objects, and general space-control applications. A type 874 voltage-regulator tube supplies constant voltage to the oscillator, which uses the pentode section of the 6B7 tube. The amplitude of oscillation depends on the ratio of antenna-to-ground capacitance C_2 to C_1.

As the antenna-to-ground capacitance is increased, the amplitude of oscillation can be made to increase. The oscillating voltage is rectified in the double-diode section of the 6B7 tube, and is applied to the grid circuit of the type 43 relay tube. The screen grid of the type 43 is given an adjustable bias by means of which the maximum relay current can be controlled.

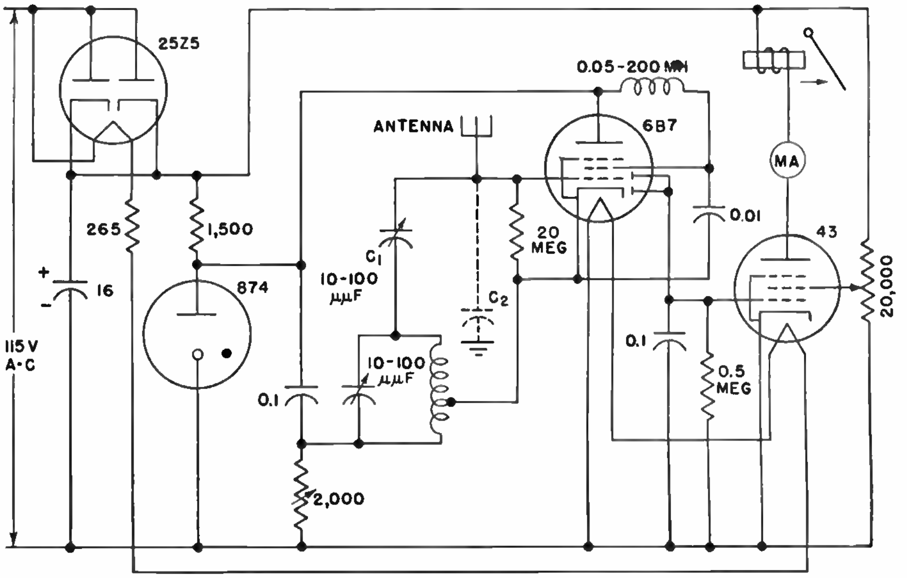

As the antenna-to-ground capacitance increases, the amplitude of the rectified voltage increases, and the plate current in the 43 tube changes accordingly.

When a long antenna is used, the tuned circuit of the oscillator should be designed for a low frequency, in order to reduce radiation losses from the antenna. For high sensitivity, all losses in the oscillating circuit should be kept as low as possible, for example, by the use of good insulation and high Q values for the coils. By increasing the resistance of the choke coil feeding the screen of the 6B7, the sensitivity of the circuit may be increased until it becomes unstable and the relay no longer opens at a given value of capacitance.

F. H. Shepard, Jr., Two Practical Capacity-operated Relays, *Electronics*, April, 1937, p. 35.

Capacitive Micrometer Using Frequency Converter and Saturated Limiter

THIS sensitive electronic micrometer circuit operates by measuring the variation in capacitance between a fixed and a movable part to change the resonant frequency of a 3,200-kc push-pull Hartley oscillator. The oscillator is directly coupled to a buffer stage that feeds through a coaxial line into the amplifier. Here the voltage variations are applied to a frequency-converter stage, along with voltage from a local oscillator. The converter output beat frequency is thus within the pass-band of the 465-kc i-f amplifier and limiter. The limiter frees the instrument from errors that might otherwise be caused by amplitude variations in the input to the discriminator. The d-c output of the discriminator is ample to give full deflection of the beam on a 5-inch cathode-ray tube screen of an oscilloscope directly, and additional amplifier stages can be added as required for control purposes. The basic circuit has been successfully used for dilatometer, manometer, roughness gage, and hardness-testing apparatus.

To obtain highest sensitivity, a parallel-plate capacitor should be used, one of the plates being connected to or made part of the object being measured, and the other fastened rigidly to the fixed reference point. In the capacitor arrangement shown at C_1, used for testing lathe spindles, a carefully lapped steel cylinder is fastened to the end of the lathe spindle to serve as the rotor of a split-stator capacitor. The stator plates are 0.75 square inch in area each, and are lapped to the same radius as the spindle extension. Spacing is about 0.03 inch, and the two capacitor sections in series give an input capacitance of about 3 $\mu\mu$f that varies with spindle eccentricity.

Motions at rates about 10,000 cycles per second or 600,000 cycles per minute may be amplified with this circuit, this performance being far more than ample for mechanical devices. The band width is from 15 to 20 kc for an i-f value of 465 kc. With proper design of the sensitive capacitor, distance changes as small as 1 angstrom unit can be detected.

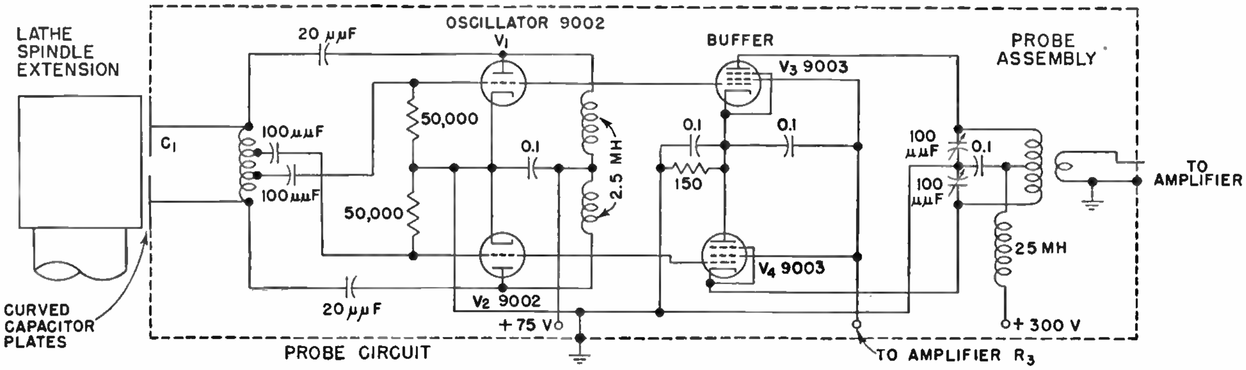

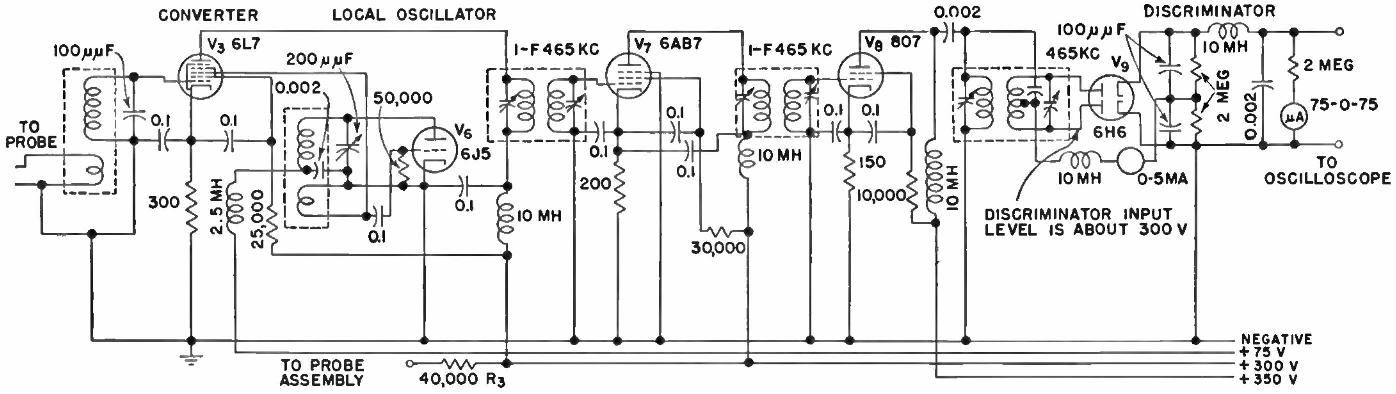

AMPLIFIER CIRCUIT

R. W. Dayton and G. M. Foley, Capacitive Micrometer, *Electronics*, September, 1946, p. 106.

Capacitive Micrometer Using Cascade Limiter and Discriminator

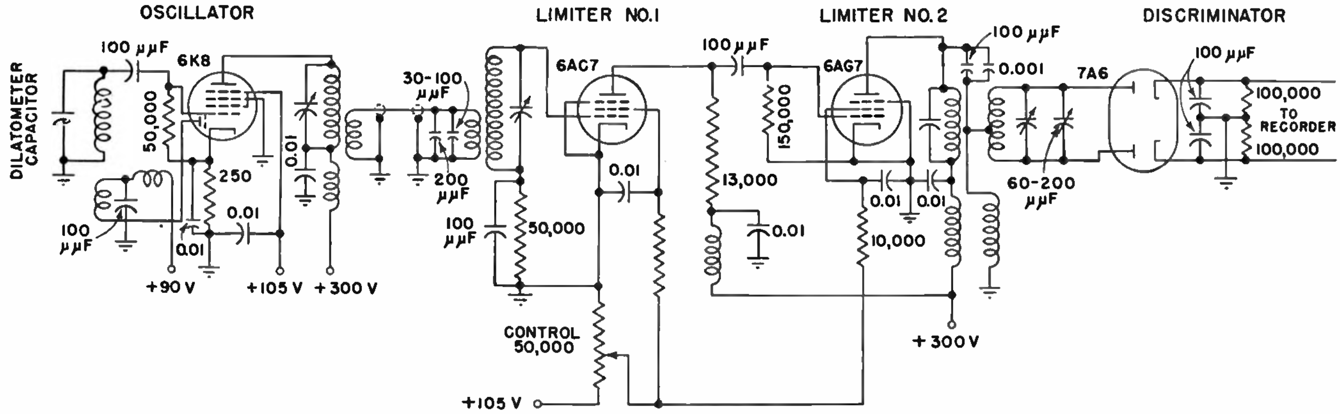

The electronic micrometer circuit shown here was used as a dilatometer to measure the thermal expansion of metal-tube specimens during rapid heating and cooling.

The specimen is 2 inches long by about ½ inch in diameter. A quartz rod resting on top of the specimen supports a grounded metal cylinder of 1-inch outside diameter that is coaxial with and inside an insulated cylinder of 1.004-inch inside diameter. Expansion of the specimen causes the inner cylinder to move into the outer one and increase its capacitance to ground.

The device described is the main tuning capacitor of a circuit resonating near 4.3 mc, which is made the grid circuit of the triode oscillator section of a 6K8 triode-hexode tube. Oscillation is maintained by a tickler in the triode plate circuit, which is coupled to the grid circuit. The hexode section of the 6K8 provides a buffer amplifier to isolate the oscillator.

The oscillator buffer 6K8 is connected by a coaxial-cable link to two limiter amplifiers, a 6AC7 and 6AG7 in cascade, the output voltage of which is controlled by changing the screen voltage. The second limiter feeds the 7A6 discriminator, the output circuit of which is arranged to operate into the load provided by a high-speed recorder that prints one point per second. One set of alternately occurring points represents the length of the sample, and intervening points record its temperature.

A nearly identical circuit has been used in order to make a recording manometer in an apparatus for the continuous extraction and measurement of gases from steel. A 1-inch brass tube placed coaxially around the mercury column of the manometer was found to make a satisfactory tuning capacitor.

Outstanding properties of this circuit are high sensitivity, good electrical stability, and the ability to respond to rapid movements. High sensitivity is another way of saying that it is capable of extremely high magnification of motion, or very high amplification. The f-m arrangement described is unusual among electronic amplifiers in that it maintains the static or d-c component through a stable amplifier. The output voltage may be made high to operate a cathode-ray oscilloscope, or the output impedance may be made low, by the incorporation of a simple cathode-follower stage, to operate low-impedance devices, such as self-balancing recording potentiometers.

R. W. Dayton and G. M. Foley, Capacitive Micrometer, *Electronics*, September, 1946, p. 106.

Circuit for Converting Capacitance Changes into Current or Voltage Changes

This dual-oscillator circuit for converting small changes of capacitance into corresponding changes in a rectified electrical current has low background noise, high sensitivity, and is relatively free from interference by local electrostatic and magnetic fields. The circuit can be used to study vibrations or capacitance changes having frequencies ranging from 0 to over 200 kc. It is particularly useful in connection with seismometers for recording earth vibrations, in studies of the motion of large vibrating surfaces, in measurement and recording of the elongation of test specimens being stretched, and in a host of other machines used in metallurgical research.

The two r-f oscillator circuits are isolated from each other as much as possible, so that the only path for interchange of signals is through the coupling circuit, which consists of rectifier V_1, d-c milliammeter M_1, and coils L_1 which are closely coupled to the tuning circuits of the r-f oscillators. These oscillators are as nearly alike as possible, and are normally operated so that they would oscillate at virtually the same frequency if the coupling circuit were removed.

The coupling provided through the coupling circuit is adequate to make the oscillators synchronize, even when the frequency of one oscillator is changed within certain limits. Radio-frequency current in the coupling circuit is at a minimum when both oscillators are tuned to the same frequency, and it increases with detuning of either oscillator as power is transferred between oscillators to keep them in synchronism. The coupling current is a maximum near the point where further detuning will cause the oscillators to drop out of synchronism.

The input terminals are arranged so that the capacitance pickup device can be connected in parallel with the tuning capacitor of either oscillator or, when the pickup provides two capacitances, one of which decreases as the other increases, one can be connected to each oscillator for doubled sensitivity.

The circuit fundamentally provides a low-impedance output, making it adaptable for use with a low-impedance current-operated measuring, or recording, instrument. This is connected between the *LOW* and *GR* output terminals, with switch SW_1 in the upper position.

The minimum current value (or the normal value if the operating point is chosen somewhere near the middle of the linear region of the curve) may not be desirable in some applications because of its effect on sensitivity and range. For this reason, a battery and rheostat R_2 are provided in a bucking circuit to permit reducing to zero the initial current in the external circuit. Meter M_1 (0 to 50 ma) then reads the total d-c synchronizing current, and meter M_2 (3-0-3 and 30-0-30 ma) reads the actual current in the external circuit.

It is sometimes desirable to use a high-impedance voltage-operated device, such as a cathode-ray oscilloscope, or to amplify the output signal before it is measured or recorded. To obtain the required voltage output for this purpose, switch SW_1 is thrown to its lower position, which inserts 1,000-ohm resistor R_3 in the coupling circuit. The *HIGH* and *GR* output terminals are used.

A well-regulated power supply is required to eliminate effects of line-voltage variations. Satisfactory results were obtained with the universal half-wave rectifier shown, using a voltage-regulator tube across the output.

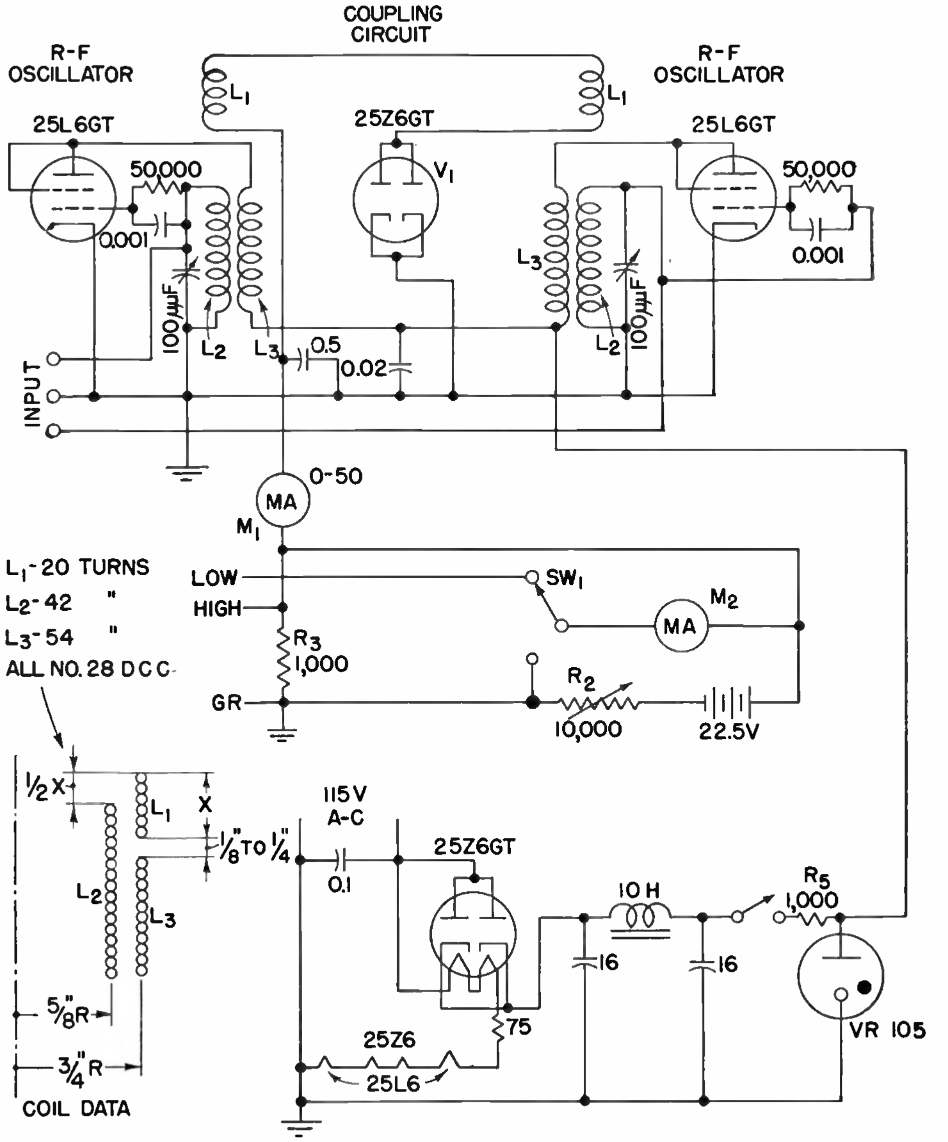

E. V. Potter, An Electrical Transducer Circuit for Use with Capacity Pick-up Devices, *Rev. Sci. Instruments*, May, 1943, p. 130.

Circuit for Obtaining Negative Capacitance That Varies Linearly with Resistance

By coupling the output of an ordinary two-stage amplifier back to the input through a capacitor in the manner shown, and adjusting the amplification properly, an input impedance is obtained that behaves as a reactive circuit element whose reactance varies inversely with frequency but is positive in sign—a negative capacitance. At any given frequency this negative capacitance will present the same type of reactance as an inductance; if the frequency is increased, however, the reactance of the inductance will increase, while that of the negative capacitance will decrease.

The negative capacitance obtained with this circuit can be made substantially independent of amplifier-tube and supply-voltage variations and of frequency by employing inverse feedback in the amplifier. Varying the amount of inverse feedback by means of rheostat R_{nf} provides a convenient means of varying the negative capacitance over a wide range. With 0.01 μf for C_{pf}, varying R_{nf} from 1,000 to 10,000 ohms increases the negative capacitance linearly from 0.01 to 0.2 μf; with 1.03 μf for C_{pf}, increasing R_{nf} from 500 to 10,000 ohms increases the negative capacitance from 0.45 to 10 μf linearly. These values were obtained at a frequency of 1,000 cycles.

In general, the impedance is not a pure negative capacitance but may contain a small negative resistance component. The power factor is therefore negative. If C_{pf} is 0.01 μf or less, the absolute magnitude of the power factor is less than 0.5; if C_{pf} is in the range 0.01 to 0.10 μf, the negative power factor increases to approximately 1. For larger values of C_{pf} the absolute magnitude of the power factor increases somewhat proportionally; also, the losses in C_{pf} contribute materially to the power factor. If paper capacitors are used, care should be exercised to select those with low losses. The use of mica capacitors is recommended.

The negative capacitance described herein has proved useful in extending the frequency-response range of amplifiers by a factor of as much as 5 to 10 times. This performance is obtained simply by shunting the input, interstage, or output capacitance of the amplifier with a negative capacitance.

Another useful application is in reducing the input capacitance of vacuum-tube voltmeters or of other instruments fed by long cables with high capacitance to ground. Insertion of the negative capacitance at the input or output terminals of the cable makes it possible to neutralize the shunting effect of the cable and to raise its input impedance at high frequencies appreciably.

The high-frequency response of a-f transformers is limited by the distributed capacitance of the windings. This response may be improved materially by means of negative capacitance. For example, a negative capacitance connected across the secondary of a transformer whose normal output voltage with constant input was down to 85 per cent of maximum at 2,000 cycles increased the range of operation for the same output voltage performance to 12,000 cycles.

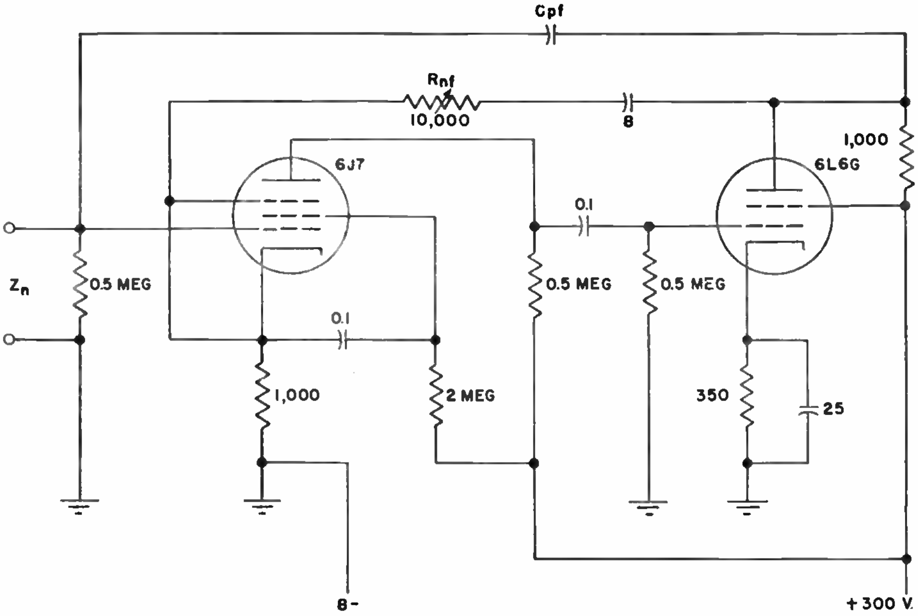

In using negative capacitance to cancel or neutralize the positive capacitance of a circuit, care should be exercised to see that too much cancellation is not attempted. As mentioned above, the source of negative capacitance may contain a negative resistance component and complete cancellation of the capacitance across the output terminals will present a circuit in which oscillations may be sustained. These unwanted oscillations may make the use of the negative capacitance impractical unless they occur at frequencies well beyond the working range for which the device is intended and provided that they do not produce undesirable secondary effects.

Cledo Brunetti and Leighton Greenough, Negative Capacitance, *Communications*, March, 1944, p. 28.

CATHODE-RAY CIRCUITS

Linear Sweep Circuit Employing Blocking Oscillator and Discharge Tube

An improved version of the self-quenching oscillator, shown here, requires two triodes but they may be in a single envelope as in the 6N7 or 6C8G. The first section is a simple blocking oscillator, with the time constant of the grid-leak-capacitor combination so large that the tube blocks periodically. When the tube blocks, the capacitor charge drives the grid beyond cutoff. The charge leaks off through the resistor according to a logarithmic law until the capacitor voltage is low enough to permit oscillation to start again.

The wave form produced across the grid leak is not used. The grid of the tube is negative and beyond plate-current cutoff for nearly the whole blocking cycle and becomes positive for only a short pulse. Since the grid of the second section is connected to the grid of the first section, this second section is also beyond plate-current cutoff except for one pulse at every blocking cycle. During this time, when the tube is nonconducting, C charges through R again but the values of R and C are such that it can only charge to a fraction of the B voltage before the tube becomes conducting for a short time and discharges the capacitor. The cycle then repeats. The frequency of the saw-tooth wave is dependent on the grid leak and capacitor constants of the blocking oscillator, while R and C determine the amplitude and the wave form. The higher the ratio $RC/(R_1 + R_2)C_1$, the higher the amplitude and the less the linearity.

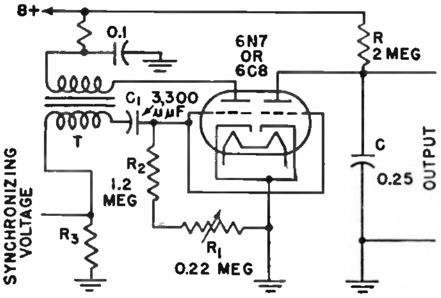

Synchronization is easily obtained by supplying a small synchronizing voltage across R_3. Values given are for a sweep frequency of 60 cycles. For a 13,230-cycle sweep, the values would be as follows; R—0.6 meg; C—0.001 μf; R_1—30,000 ohms; R_2—27,000 ohms; C_1—820 $\mu\mu$f.

Sweep Circuits, *The Aerovox Research Worker*, April, 1939.

Bootstrap Circuit for Correcting Nonlinearity in Saw-tooth Sweep Generators

In this circuit, sometimes known as a bootstrap circuit, the saw-tooth sweep voltage is fed back through a cathode follower, which has a gain of approximately one and does not reverse the phase, to the top of charging resistor R_1. In this way a constant voltage is maintained across R_1 and a constant current into C_1. The isolating resistor R_2 may be replaced by a diode, but this is usually of little advantage. As a cathode-follower output is often required after a sweep generator, use of this circuit does not necessarily mean the inclusion of an extra tube. The circuit is especially suitable for use with high-speed sweeps. R_1 and C_1 may be varied without affecting linearity. Almost perfect linearity may often be obtained.

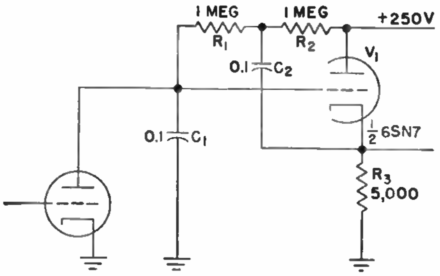

VALUES ARE FOR 60-CYCLE SWEEP

Robert P. Owen, Linear Sweep Circuits, *Electronics*, December, 1946, p. 136.

Sweep Linearity Correcting Circuit Using Feedback without Phase Reversal

Linearity correction for the more or less exponential output of the conventional sweep circuits employed in television and cathode-ray oscilloscope equipment is achieved here by feeding back without phase reversal to the top of the charging resistor. Output is linear when the gain around the feedback loop (from lower end to upper end of R_1) is one, and overcompensation will result as the arm of the linearity adjustment potentiometer is advanced toward the plate of V_2. If a load resistor equal to R_3 is added in the plate circuit of V_1, these two tubes can function as a balanced output amplifier. This method is one of the best available for compensating low- and medium-frequency sweeps, either fixed or variable. Circuit values are for 60-cycle sweeps.

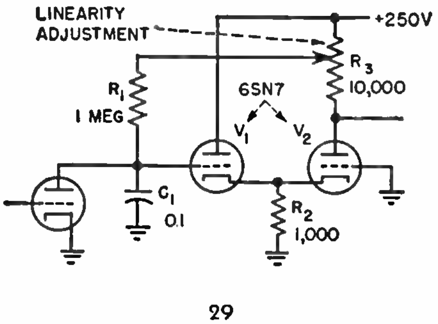

Robert P. Owen, Linear Sweep Circuits, *Electronics*, December, 1946, p. 136.

Modified Feedback Circuit for Linearity Correction of Cathode-ray Sweeps

In this modified circuit for achieving correction of nonlinearity in saw-tooth sweep generators, the linearity-adjusting potentiometer is not the load resistor of one of the tubes. This gives more satisfactory performance in some cases, though of necessity the circuit is more complicated. Perfect linearity will result when the ratio of R_2 to R_1 is equal to A minus 1, where A is the gain around the feedback loop. The component values shown are approximately those required for a 60-cycle sweep.

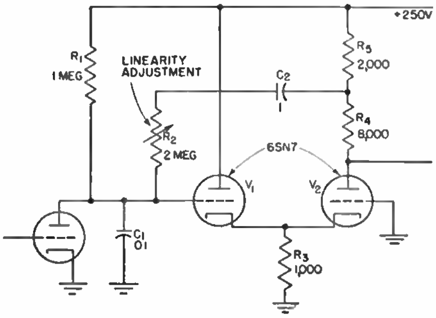

Robert P. Owen, Linear Sweep Circuits, *Electronics*, December, 1946, p. 136.

Constant-current Pentode Circuit for Sweep Linearity Correction

The output of almost any type of sweep generator can be improved by replacing the charging resistor with a constant-current pentode, but this is done easily only when the capacitor discharges, rather than charges, through the resistor. A pentode having a high plate resistance should be used, and the tube should be operated well out on the flat portion of the characteristic. The screen potential must of course be held constant, as by a fairly heavy bleeder between the positive supply and ground. Constancy of plate current will be much improved by a large cathode resistor, the effective plate resistance being increased by a factor of $1 - G_mR_2$. Values given are for a 60-cycle sweep.

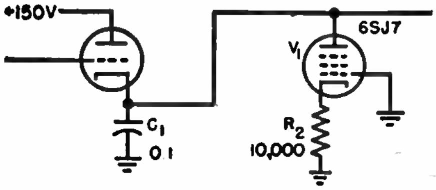

Robert P. Owen, Linear Sweep Circuits, *Electronics*, December, 1946, p. 136.

Use of Constant-current Tube with Feedback for Sweep Linearity Correction

The use of a constant-current tube may improve linearity though it will never make possible a perfect saw tooth, but by the additional application of feedback as shown here even strong overcorrection can be attained. This method utilizes the cathode follower, which often follows such circuits, to feed a small part of the output voltage back to the cathode of the constant-current pentode. The circuit is useful both for high-speed sweeps and, because it is direct-coupled, for those of extremely low frequency. Circuit values are for a 60-cycle sweep.

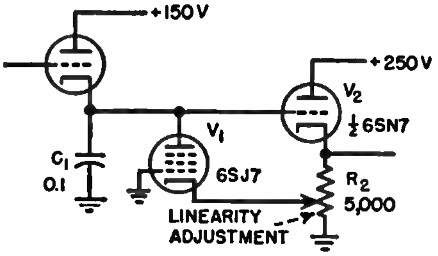

Robert P. Owen, Linear Sweep Circuits, *Electronics*, December, 1946, p. 136.

Constant-current Pentode for Linearity Correction in Cathode-follower Circuits

The constant-current pentode cannot easily be used directly for correction of linearity in some sweep circuits because of their use of cathode degeneration for frequency control. In this case feedback can be applied to the pentode screen as shown here, with equally good results.

A variable resistor R_6 can be inserted in the plate circuit of the cathode follower with little effect on the output, if it is small compared with the plate resistance of the tube. The screen supply bleeders R_4 and R_3 may be omitted and the screen connected directly to the plate of the cathode follower instead of through C_2 if operating voltages permit. Circuit values given are for a 60-cycle sweep.

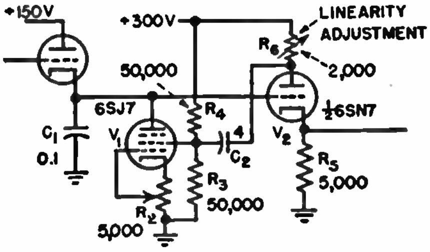

Robert P. Owen, Linear Sweep Circuits, *Electronics*, December, 1946, p. 136.

Flexible Single-sweep Circuit and Push-pull Deflection Amplifier

This sweep circuit provides flexible single-sweep operation of a cathode-ray oscilloscope for frequencies up to 20 kc. A simplified one-tube deflection amplifier is also included. The 7F7 amplifier provides push-pull output with uniform response from direct current to beyond 20,000 cycles per second with a gain of more than 50. The outputs of the two triode sections are opposite in phase, and differ by less than 5 per cent in amplitude.

The sweep circuit is direct-coupled throughout to provide flexible single-sweep operation. Other desirable features are independence of position and gain controls and symmetrical expansion of the time-base line, with respect to its center, as the gain control is turned up.

To achieve these features, it is necessary that the saw-tooth voltage appearing at the top of the gain control (point *A*) be symmetrical with respect to ground. For recurrent sweep operation, this is easily accomplished by capacitor coupling, but with such coupling, time must be allowed for the coupling capacitor charge to reach its new level, and the spot must be repositioned to compensate for the change when the saw-tooth oscillator is stopped preparatory to single-sweep operation. This can be particularly annoying where the circuit is designed for slow sweeps, and hence has a long time constant in the coupling circuit. Furthermore, if several sweeps are tripped off within a short time, their positions will not coincide because of the charge built up on the coupling capacitor.

The d-c component at *A* (referred to ground) will change much more rapidly than the saw-tooth component as R_1 is adjusted. It is therefore possible to find a point on R_1 at which the saw-tooth wave is symmetrical about ground and is only slightly attenuated. With R_1 adjusted to this point the sweep, running recurrently, will behave as if capacitor-coupled; but when the single-sweep feature is placed in operation it will assume its new conditions instantaneously with no adjustment of the positioning control and no annoying delay while the capacitors build up to their new charge. Also, successive sweeps will coincide in position. Once adjusted, R_1 need not be adjusted further. It need not be a front-panel control.

Throwing the lower switch of the synchronizing and tripping circuit to *Single* puts the single-sweep feature into operation. When this is done, the spot continues the cycle in progress, but does not fly back because the ionization potential of the 884 tube has been raised by the change in grid bias. The spot continues off the screen until the left triode section of the 7F7 begins to draw current, when its plate becomes positive with respect to its cathode. The screen remains dark until a tripping pulse is applied, manually or through the synchronizing circuit, at which time the spot flies back, completes one excursion at the same transit speed, and then continues off the screen again to await another tripping pulse.

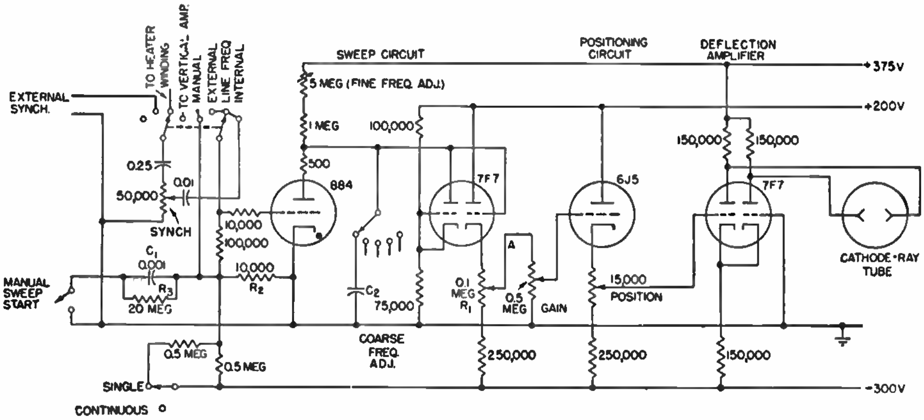

Tripping pulses may be selected from any of the sources usually used for synchronization or, with the synchronization-selector switch in the *Manual* position, the sweep may be tripped manually by means of a pushbutton. When the button is pressed, the bias on the 884 is momentarily reduced while C_1 charges. The values of C_1 and R_3 are chosen so that the tripping pulse is of shorter duration than the shortest transit time for which the circuit is designed, and only one sweep will be tripped regardless of how long the button is held down. When the button is released, C_1 discharges through R_3 and the circuit is restored to normal. If C_1 discharges too rapidly, an unwanted tripping pulse may be generated due to contact bounce when the button is released. This is prevented by making R_3 very high.

Since the input resistance of the 7F7 is practically infinite and d-c coupling is used throughout, the linearity of the time-base line at low frequencies depends entirely upon the saw-tooth oscillator. The linearity is good at 0.2 cycle per second, using inexpensive capacitors at C_2, and reasonably good linearity at even lower frequencies is undoubtedly possible with better capacitors and other precautions against leakage. With the values shown, performance is satisfactory up to 10,000 sweeps per second. Performance at much higher frequencies, without impairment of low-frequency operation, is perfectly feasible with tubes of higher mutual conductance and with lowered impedances throughout.

William A. Geohegan, Flexible Sweep Circuit and Deflection Amplifier for C-R Oscillographs, *Electronics*, December, 1941, p. 38.

Controllable Delay Circuit for Use with Single-sweep Cathode-ray Oscilloscopes

This circuit was designed to be used in conjunction with any cathode-ray oscilloscope incorporating a single sweep that may be initiated by a positive impulse. Its purpose is to delay the sweep any desired time after the peak of a repeating transient so that the sweep may be adjusted to cover any time interval desired with respect to the peak.

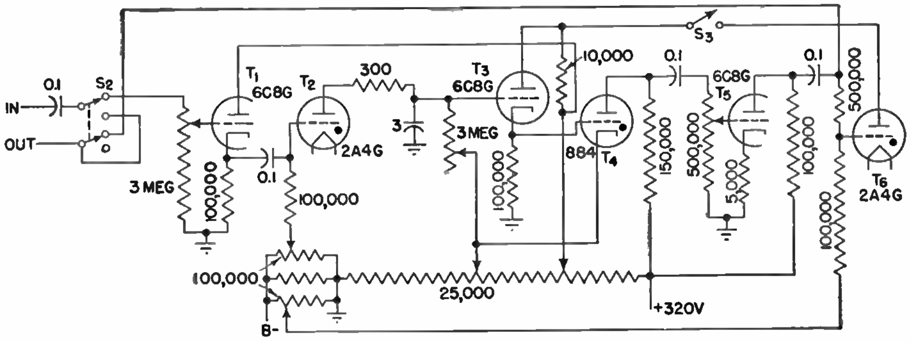

Switch S_2 permits putting the signal directly into the single-sweep circuit (lower position) or into the delay circuit. In the latter case the impulse passes through the unity amplifier T_1, which isolates the signal source (the last stage of a push-pull direct-coupled amplifier) from the thyratron circuit.

Tube T_2, a 2A4G, is a relaxation oscillator so biased that it will break down only when a positive impulse is applied to its grid. Tube T_3 is another isolating amplifier. Tube T_4, the 884, is ordinarily broken down, but because of the high resistance in its plate circuit conduction may be stopped by throwing the grid sharply negative. This occurs when the transient peak causes T_2 to break down. When T_4 opens up, its plate becomes suddenly more positive. This is changed to a negative pulse by passing through T_5. The negative pulse is passed on to the single-sweep circuit but produces no effect.

The grid of the 884 becomes less negative as the 3-μf capacitor in the T_2 relaxation-oscillator circuit charges through the 3-megohm variable resistor. When the breakdown voltage is reached, the 884 fires, its plate becomes suddenly less positive, and this negative pulse is changed to a positive pulse by T_5. The positive pulse is applied to the single-sweep circuit and initiates the sweep. The length of the delay is controlled by varying the 3-megohm resistor.

In many cases it is desirable for the circuit to throw itself out of action after one sweep. This is accomplished by closing switch S_3 in the plate circuit of T_6, a 2A4G which is caused to conduct by the same positive impulse which initiated the single sweep. This reduces the plate voltage on T_3 so that any further synchronizing impulses do not affect T_4. The circuit is made ready for another operation by opening S_3.

W. E. Gilson, CRO Delayed Single Sweep Circuit, *Electronics*, March, 1942, p. 65.

Current Feedback Circuit for Linear Sweep Generator

THIS circuit takes advantage of current feedback to cause a capacitor to charge very linearly through a vacuum tube. Capacitor C is charged by current flowing through V_1 and R from the B supply.

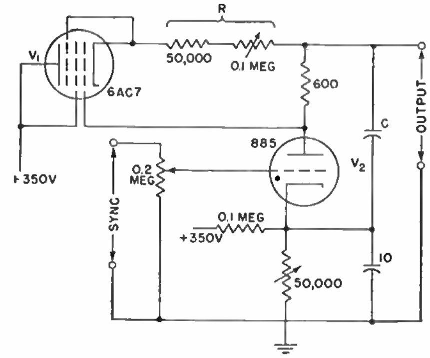

Tube V_2 is a switch used to discharge C; in this case it is a gas tube as in the usual relaxation oscillator. Current feedback upon which circuit linearity depends occurs in resistor R. Synchronization can be accomplished in the normal fashion by applying synchronizing voltage to the grid of gas tube V_2.

The 50,000-ohm resistor in series with the cathode of the 6AC7 gives a minimum value of R. The 0.1-megohm rheostat is the fine-frequency control. The value of C is changed in five steps from 0.1 μf to 0.0001 μf, giving a wide frequency range as shown in the table.

Capacitance, μf	*Frequency Range, Cycles*
0.5	40– 165
0.1	70– 450
0.02	300– 1,900
0.005	1,200– 7,500
0.001	4,000–25,000
0.0001	22,000–50,000

The 600-ohm resistor protects the 885 from excessive currents and improves the charging-to-discharging time ratio. It does so by developing a large negative bias on the 6AC7 during the discharge of C through the 885. This bias permits the voltage across C to drop more rapidly than it would if current were allowed to flow from the B supply during discharge.

The fixed bias was so adjusted that the output voltage was about 10 volts. The generator was found to make possible very high sweep frequencies with good front-to-back trace ratio and little change in amplitude with frequency.

The circuit as described is a relaxation oscillator that generates a very linear sweep. However, the principle developed can be used to produce high-speed linear sweeps of low repetition rates or even sweeps for transient observation. If the gas triode V_2 is replaced by a vacuum tube at zero bias, the vacuum tube will short C. The sweep is then generated only when a negative pulse is applied to the grid of this vacuum tube, thus cutting it off. The length of the sweep will be determined by the length of the pulse.

Eugene L. Langbergh, Analysis of Linear Sweep Generator, *Electronics*, November, 1946, p. 194.

High-power Sweep Generator Circuit for Cathode-ray Oscilloscopes

CHARGING an RC circuit from a gradually increasing voltage source is the secret of this circuit for generating a linear sweep voltage at high output for a 3-inch cathode-ray tube. Capacitor C is charged through R_3 by the voltage drop across cathode resistors R_1 and R_2 of the 6P5 low-mu triode. With the grid of the triode tied to the junction of R_3 and C, the grid bias varies as C charges, changing the plate current of the triode and thereby changing the charging voltage across R_1 and R_2. With C shorted, the plate current would be approximately 1 ma and the grid bias minus 25 volts (equal to the cathode resistor drop).

When C is allowed to charge through R_3, starting at a 25-volt rate, the grid of the 6P5 rises with it in a positive direction until finally the tube will reach a condition of zero bias, with maximum current of about 11 ma determined by the values of R_1 and R_2. A range of about 250 volts in charging voltage is thus obtained. The bias of the type 884 gas triode in the circuit is adjusted to fire on a plate voltage somewhat less than 275 volts. Assuming the extinction voltage of the 884 to be 15 volts, C will charge up during the cycle from a minimum value of 15 volts to a maximum of somewhat less than 275 volts.

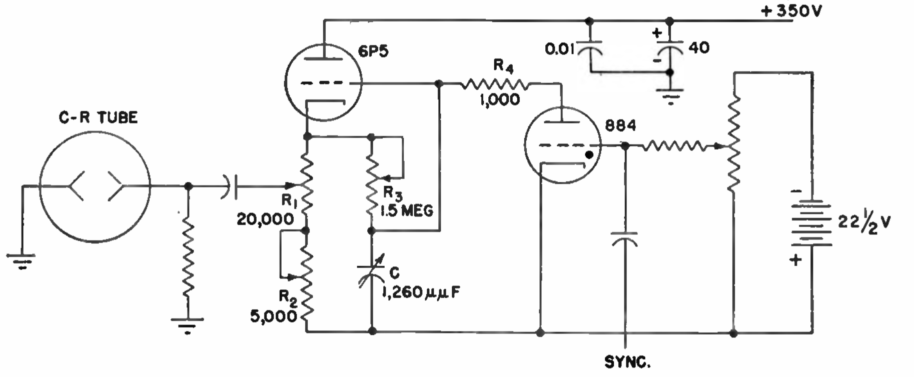

Even better success might be achieved

by using a lower mu triode, possibly a 6AE5. R_1, R_2, and R_3 should be noninductive, and the first two should have high power ratings as considerable power is present in the cathode circuit. The value of R_4 is determined by the safe maximum and average current limitations of the 884. Increasing its value will result in a longer back-sweep time. C is an ordinary three-gang broadcast-receiver tuning capacitor with sections paralleled, and it may be ganged with R_3. With the values shown for R_3 and C, a frequency range of from 60 cycles to 100 kc is obtained. Adjusting R_2 or the 884 bias voltage affects both frequency and amplitude. These may be screw-driver controls. Sweep amplitude is adjusted by the slider of R_1, which has no other effect on the circuit. No change in amplitude is noticeable throughout the frequency range, and the sweep will lock in at any frequency with no other adjustments than R_3 and C. An unregulated power supply is used for plate-supply voltage, and no trouble has been encountered in locking in ratios as high as 100 to 1. Synchronizing voltage is not critical. There will be a departure from linearity at both ends of the sweep, which can be shaped by adjusting R_2 and changing the bias of the 884 (about 18 volts normally).

Ed Rigby, A High Power Sweep Generator, *Broadcast Engineers' J.*, October, 1946, p. 10.

Linear Deflection Circuit Providing Sweeps up to Ten Seconds

THIS direct-coupled transitron sawtooth oscillator circuit provides a linear time as required for a type A cathode-ray indicator presentation. Sweep duration can be made up to 10 seconds long, as required for such astronomical applications of radar as moon-earth distance measurements. A pulse equivalent in time to the keying pulse is also generated by this circuit and is applied to the cathode of a low-level multiplier stage of the transmitter, causing it to conduct for the pulse duration and to drive the subsequent multipliers.

The time-base generator consists essentially of a high-gain pentode amplifier with capacitance coupling between plate and grid through cathode-follower stage V_2. For the duration of the conduction cycle, the anode voltage of the pentode V_1 drops, and capacitor C_1 begins to discharge through the tube. As the voltage on the plate drops, the current flow in C_1 drives the grid negative, tending to cut off the plate current. A condition of dynamic equilibrium then exists, with the plate voltage dropping at a linear rate determined by R_1 and C_1 and the grid being maintained at a constant voltage, since each decrement in plate voltage causes a corresponding drop on the grid, which keeps the grid signal and hence the output of the tube substantially constant. The time constant of R_1C_1 is chosen to cause C_1 to become fully discharged during the cycle.

When the plate voltage drops to the point where electrons from the cathode can no longer flow to it, an increase in screen current occurs, which rapidly decreases the screen voltage and correspondingly decreases the suppressor voltage. This action, which is cumulative, has the effect of suddenly cutting off the anode current. This causes the cathode current to be retarded by the suppressor grid and made to flow to the screen. A negative pulse appears at the screen, and C_1 begins to charge through the cathode follower until a point is reached where the plate begins to draw current and the oscillator is recycled. The screen returns to its original voltage, and the plate voltage begins to fall. By suitable choice of R_1 and C_1 a range of from about 0.1 to 3 cycles is obtained.

Keying-voltage signals are derived from the differentiated output of the negative pulse appearing on the screen of the oscillator. This is used to trigger a multivibrator whose time constant is controllable by a variable 5-megohm resistor, varying the output pulse width from 0.02 to 0.25 second.

The addition of the cathode-follower stage V_2 was made to shorten the charge time of C_1 by causing it to charge through the grid-cathode space of the cathode follower. This reduces the return trace time. Tube V_3 serves as a degenerative phase-inverting amplifier to secure push-pull sweep voltage.

The keyer multivibrator is a conventional cathode-coupled flip-flop circuit with the initiating trigger applied as a positive pulse on the grid of the normally nonconducting section. A positive pulse varying in width from 0.02 to 0.25 second is obtained at the plate of the other section. This signal is applied to a normally cutoff pentode whose load impedance is the cathode of the 12.388-mc amplifier stage in the transmitter. For the duration of this applied signal, the plate of the amplifier is driven negative, taking the cathode of the keying tube down with it and thus causing it to conduct.

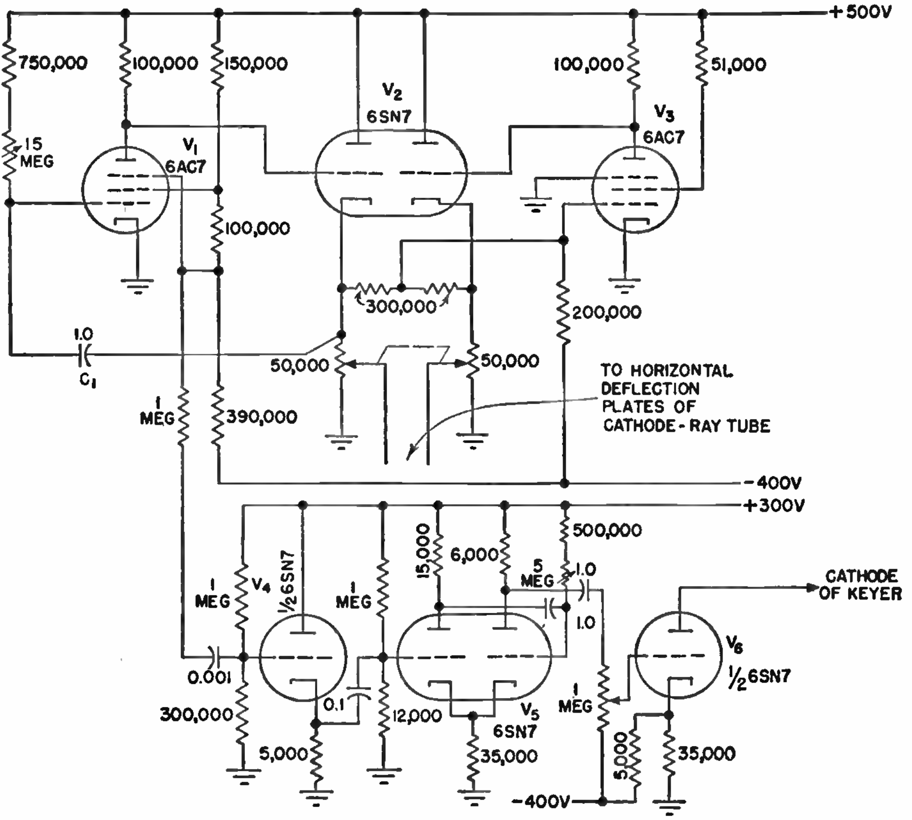

Jack Mofenson, Radar Echoes from the Moon, *Electronics*, April, 1946, p. 92.

Linear Sweep and Beam-brightening Circuit for Cathode-ray Photography

For keeping the electron beam of a cathode-ray tube at a low intensity or entirely off except during photographic recording of the wave form of a desired transient phenomena, the accompanying circuit offers a desirable combination of simplicity, reliability, flexibility, and usefulness.

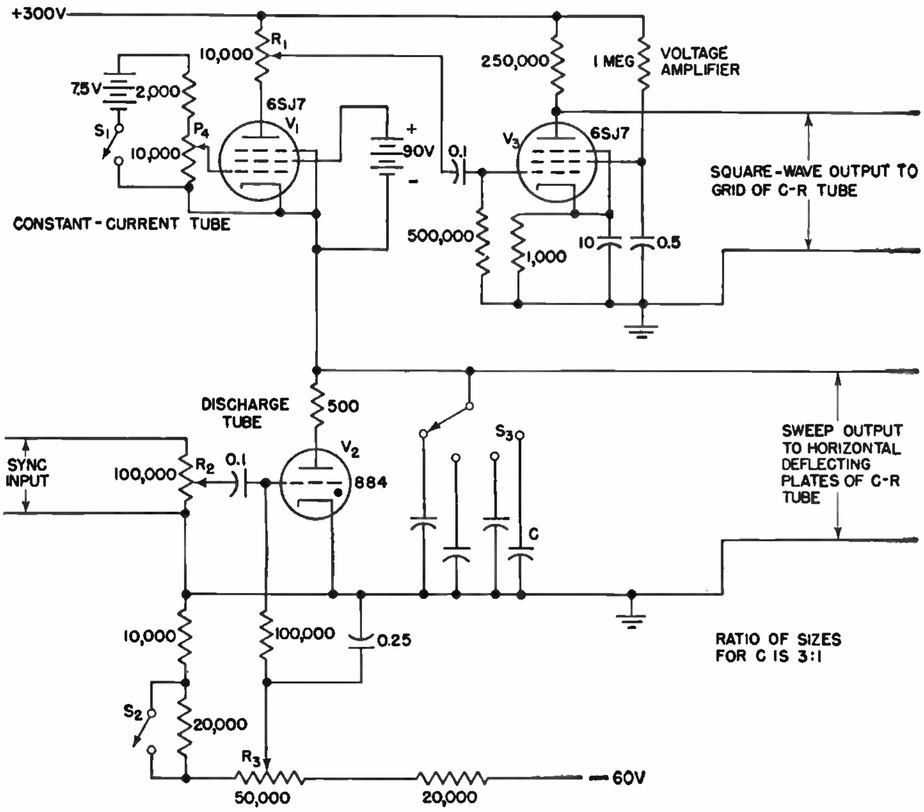

A negative bias is applied to the control grid of the cathode-ray tube to keep the screen intensity down to the desired low value. Now when a positive pulse of approximately square shape is applied to the cathode-ray-tube grid by the circuit, the beam is suddenly intensified, is kept so for the duration of the pulse, and then is as suddenly turned off again. A linear timing pulse is simultaneously applied to the horizontal deflecting plates and the unknown wave form is applied to the vertical deflecting plates, so that the record is made by a single excursion of the luminous spot across the screen.

The square pulse for brightening is produced by the potential drop across R_1, which is in series with the charging circuit of sweep capacitor C. Current flows through R_1 only while C is being charged, and the current at those times is held to a constant value somewhere between 0.3 and 1 ma by V_1. The resulting square pulse is amplified and made positive in polarity by voltage amplifier V_3. The magnitude of the brightening pulse is controlled by R_1.

Initiation of action is afforded by the bias arrangement for the control grid of the gas triode tube V_2. In the waiting condition C is charged. When a signal of positive polarity is received at the grid of V_2, C is discharged suddenly through that tube, and then recharged at a constant rate through the constant-current tube V_1, producing both the linear sweep pulse and the brightening pulse; the circuit is then back to the waiting position.

A fixed bias is applied to the grid of the discharge tube by means of R_3. This bias is so adjusted that the tube will fire when, and only when, a small positive pulse is applied to the tube's control grid. An isolating circuit is introduced, so that the initiating or synchronizing pulse is applied directly to the grid. Positive synchronizing pulses of at least 1 volt magnitude are required for reliable synchronization.

A continuously recurrent sweep may be obtained when switch S_2 is closed, shorting out a portion of the negative voltage divider and raising the bias applied to the control grid of V_2 to the point where it will fire each time the voltage across C reaches a suitable magnitude.

Howard C. Roberts, An Auxiliary Circuit for C-R Photography, *Electronics*, September, 1942, p. 59.

Phase-splitting Circuit for Elliptical Sweep of Cathode-ray Tube

By phase shifting the horizontal deflecting potential of a cathode-ray tube 90 degrees with respect to the vertical deflecting potential, this circuit arrangement provides an elliptical sweep for rapid, accurate determination of pulse characteristics in such applications as metering velocity of light, delays at discontinuities in filters and transmission lines, television, radar ranging, and calibrating linear sweeps. The horizontal deflecting potential is fed push-pull, while the vertical phase is connected single-ended to one vertical deflecting plate. The value of C_4 depends on the sweep-frequency range. Values of C_5 and C_6 are chosen to resonate the transformer at the frequency of the sinusoidal input. Critical coupling or less is used at M. Typical values are indicated for other components.

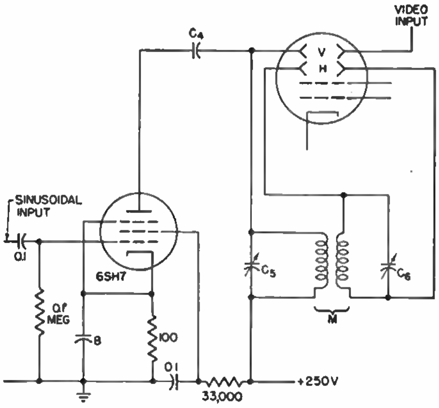

Allan Easton, Measuring Pulse Characteristics, *Electronics*, February, 1946, p. 150.

Universal Oscilloscope Circuit Having Single Sweep, Spiral Sweep, and Z Amplifier

ORIGINAL features of this versatile amplifier and sweep circuit arrangement for cathode-ray tubes include a method of eliminating the influence of the amplitude control on the position of the spot in the direct-coupled sweep circuit, inclusion of a unity-gain amplifier for use in observing potential changes in circuits from which no current can be drawn without disturbing their operation, and provisions for single sweep, spiral sweep, and a *z*-axis amplifier to modulate the intensity of the beam.

A direct-coupled push-pull amplifier using two 6N7G tubes is used for vertical deflection. It has an amplification of 600 with flat response up to 30 kc, and is absolutely stable at full gain. The in-phase gain (the same signal applied to both grids) is extremely small, making it unusually free from 60-cycle pickup. Because of the inherent phase-inverting characteristics of the circuit, the output is the same whether the signal is applied from grid to grid or from one grid to ground.

As the circuit is push-pull, there is no loss of amplification produced by the large cathode resistors, since there is no signal voltage across them. Another important advantage of the push-pull amplifier, besides its great stability in regard to changes in plate and heater voltages, is its relative indifference to a moderate amount of ripple in the plate-supply voltage. This is applied to both plates equally, producing no deflection. Switch S_2 provides capacitive coupling if desired.

To adjust the amplifier, variable 100,000-ohm resistors are placed in the cathode circuits of the tubes. The second 6N7G is removed. The centering control is adjusted to its mid-point by equalizing the plate voltages on the first 6N7G. The bias is adjusted by means of the 100,000-ohm variable cathode resistor until the voltage from cathode to plate is slightly more than half that from the cathode to the plate supply. The second 6N7G tube is now inserted and the same means used to adjust its bias. The variable cathode resistors are then replaced by equivalent fixed resistors.

The unity amplifier has its load resistor in the cathode circuit. It has extremely high inverse feedback, and the output at the cathode is in phase with the input and theoretically equal to it, but actually somewhat smaller. The cathode binding post is connected to one of the input binding posts, and the grid is connected to the point whose potential changes are to be observed.

The sweep circuit is direct-coupled, making possible the use of sweep frequencies as low as desired. The longest travel time obtainable with the values shown is 9 seconds.

Assuming that the standard sweep generator, consisting of the 884 and 6J7G, is operating satisfactorily, the 6N7G feeding the horizontal deflecting plates is removed, the 100,000-ohm bias control is turned to its most negative point, and the sweep selector switch S_8 is turned to internal sweep. The voltage at the plate of the 6F8G is measured at the end of the return trace, using the slowest sweep. The 100,000-ohm balance potentiometer,

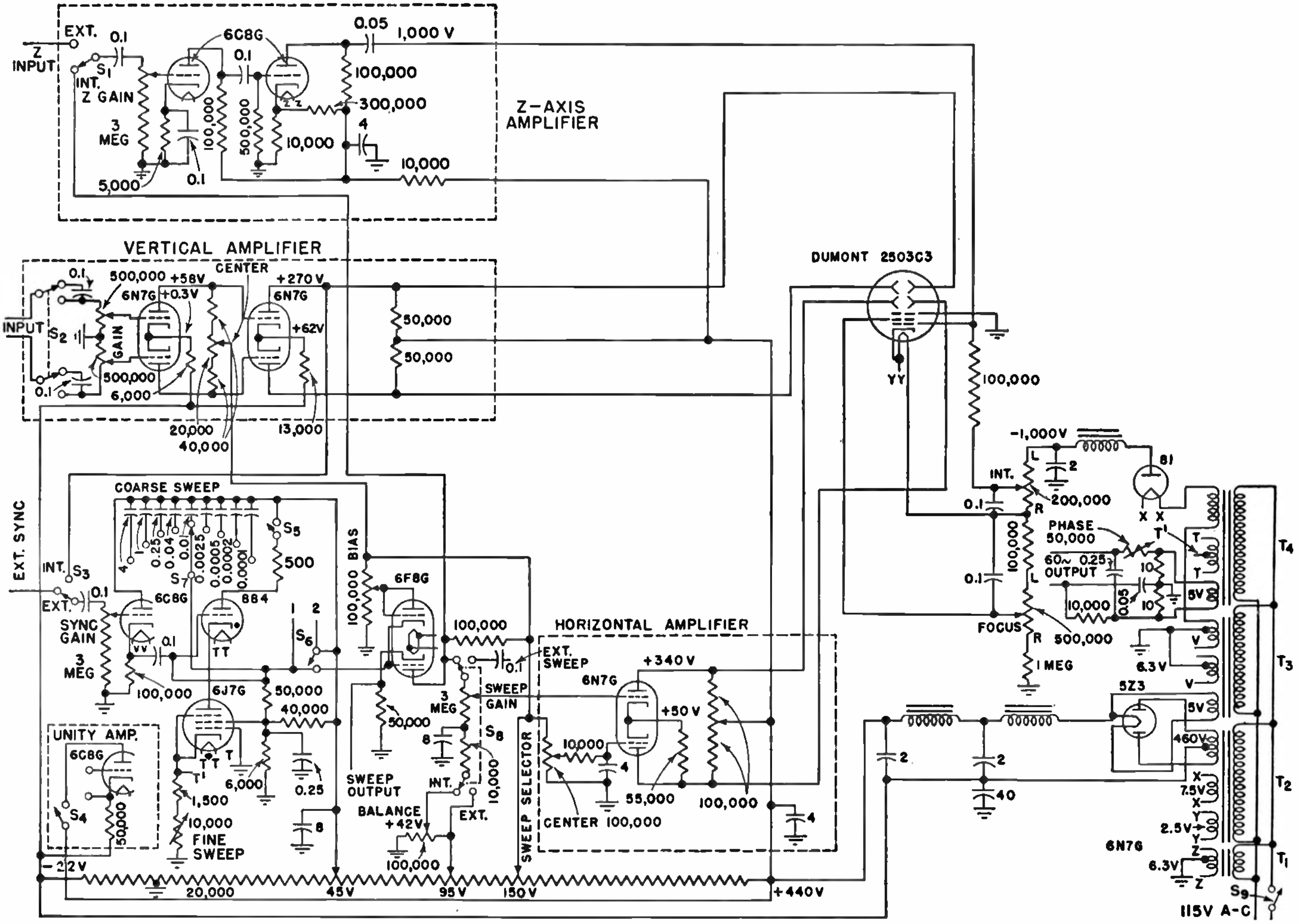

located under the chassis, is set to the same voltage. At this point there is no voltage across the sweep gain control, and changing the amplitude has no effect on the starting point of the sweep.

A 100,000-ohm variable resistor is placed in the cathode circuit of the 6N7G, the tube is inserted, and the bias is adjusted so that the largest possible linear sweep is produced. The linearity is best judged by observing the shape of the sweep with another oscilloscope. The variable resistor is then replaced with a fixed unit.

The sweep may be synchronized with a regularly recurrent signal by means of the synchronizing input. This is coupled through a unity amplifier, using a 6C8G, to the grid of the 884 gas tube, causing the latter to fire at a somewhat lower plate voltage than it does ordinarily and tending to synchronize the breakdown with the positive peaks of the signal. The synchronizing voltage may be obtained from a plate of the vertical deflection amplifier or from an external source by turning S_3.

The bias control of the 6F8G is used to produce a single sweep. The cathode of the diode to which the bias control is connected goes negative as the sweep capacitor charges. If the bias control is set to a point more negative than the peak of the sweep, the diode has no effect. When the bias control is set to a point slightly more positive than the peak of the sweep, the cathode of the diode becomes slightly negative with respect to the plate, and the diode draws current, preventing further charging of the capacitor. The 884 gas tube will not break down unless its grid bias is reduced by a positive pulse applied through the synchronizing amplifier, which produces a single sweep. This pulse may be initiated by a signal peak, or by applying an impulse from a transient-producing device a few milliseconds before the transient is produced.

A single sweep may be produced manually by opening S_5 and then closing and opening S_6. This sweep occurs without time delay, as the capacitor starts charging immediately. Points 1 and 2 are connections on the rear terminal strip, and may be connected to points on the transient-producing device that are in contact until the transient is generated.

The external side of sweep selector switch S_8 is connected to such a point on the bleeder that the spot is near the center of the screen when the sweep selector switch is turned to external sweep.

A 60-cycle output is provided from transformer T_4, two voltages to ground being available. The phase of one of them is variable. By connecting one of the outputs to the external sweep input, a 60-cycle sweep is produced. This is useful for producing the familiar Lissajous figures. A somewhat less familiar figure, as useful as the cogwheel pattern obtained by modulation of the second anode voltage but more easily obtained, is the circular sweep. This is produced by connecting the other output post to one of the d-c amplifier grids and adjusting the relative amplitudes and phase until a circular sweep is produced.

A spiral sweep is produced by superimposing a linear motion on the circular sweep. This is done by connecting the sweep output to one of the inputs of the d-c amplifier with the signal source, and leaving the connections otherwise as for a circular sweep.

The *z*-axis amplifier is used to modulate the intensity of the beam by varying the grid voltage, thus producing dark areas in the trace on the negative peaks. This may be used to eliminate the return trace on the linear sweep, to mark the circular sweep, or to produce timing marks on a signal with a linear sweep. Accurate timing is thus possible on a photograph of a single sweep.

Placement of parts is not critical, except that it is advisable to keep the transformers as far from the cathode-ray tube as possible. It was found necessary to encase the tube in a 9-inch nipple of 3-inch iron pipe, as sufficient spacing was not possible on the chassis used. A 550-volt power supply, if available, will make adjustment of the various supply voltages simpler.

W. E. Gilson, A Versatile Oscilloscope, *Electronics*, December, 1941, p. 22.

Direct-coupled Feedback Amplifier for Linear Electrodynamic Deflection

This direct-coupled amplifier was designed for deflection of a type 5JP5 cathode-ray tube operating at a second-anode potential of 2,000 volts and a third-anode potential of 3,000 volts. The amplifier has deflection-voltage capacity considerably greater than that required for deflection of this tube by normal standards in order to limit operation to only a small part of the essentially linear portion of the plate characteristic of the amplifier and thereby reduce amplitude distortion to a minimum.

Tubes V_1 and V_2 are cathode-follower stages, provided to increase the input impedance of the amplifier. Tubes V_3 and V_4 comprise the first amplifier stage of the assembly. Tubes V_5 and V_6 are the main elements of a constant-current direct-coupling network employed to reduce the average level of the signal potential appearing on the plates of V_3 and V_4 to a level suitable for the grids of V_7 and V_8, while maintaining uniform response to signals of zero frequency. Tubes V_7 and V_8 constitute the feedback-controlled output stage of the amplifier unit.

The differentially connected feedback circuit between the screens of V_3 and V_4 and the plate circuits of V_1 and V_2 is provided to stabilize the amplifier against long-time drifts and differences that occur in the input tubes. The resistance of the plate loads in these two tubes is too small to affect seriously their operation as cathode followers. The feedback circuit, which is effective in reducing the imped-

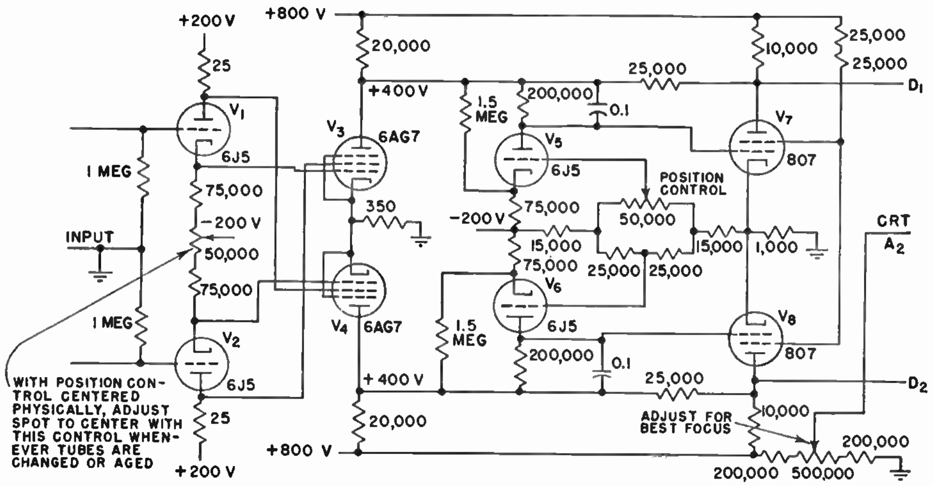

ance level of the output circuit, is provided by the connection between the plates of V_3 and V_7 and between V_4 and V_8.

The design was approached as an attempt to render the stray capacitance as ineffective as possible, and the impedance level of the output circuit has been reduced by approximately 90 per cent.

Although a considerable sacrifice of voltage gain has been made in the second stage, this is justified by a reduction in output impedance from approximately 4,500 to 500 ohms. Used with a type 5JP5 cathode-ray tube, this circuit has produced uniform spot deflection, as a function of frequency, from zero to 1.5 mc. It is believed that the mechanical arrangement of the amplifier used for the tests of the circuit could be redesigned considerably to achieve improved high-frequency response with no change in electrical characteristics.

G. Robert Mezger, Feedback Amplifier for C-R Oscilloscopes, *Electronics*, April, 1944, p. 126.

Capacitance-coupled Feedback Amplifier for Electrodynamic Deflection

Application of feedback for impedance compensation in this capacitance-coupled deflection amplifier for a cathode-ray oscilloscope gives wide-band performance with small sacrifice of other characteristics. A constant output potential is maintained, with a constant input over a desired frequency range, in the presence of any stray capacitive loading that may be present in the output circuit.

To control undesirable effects of load circuit capacitance, the impedance level of the output circuit is decreased by reducing the internal plate resistance of the output tube through the use of negative voltage feedback. Because the internal plate resistance of a vacuum-tube amplifier is connected in shunt with the external load, reduction of this resistance will effect a reduction of the over-all impedance level of the output circuit.

The reduction of impedance level of the output circuit of a vacuum-tube amplifier by the use of negative voltage feedback can be greater than 90 per cent of the value without feedback. Such a method, therefore, is of particular interest in the case of cathode-ray-tube deflection amplifiers, where the high deflection potentials required often demand the use of expensive transmitting tubes and large power dissipations to obtain full-scale deflection.

This capacitance-coupled amplifier is designed to deflect a type 5LP5 cathode-ray tube operated at a second-anode potential of 1,100 volts and a third-anode potential of 2,000 volts. The amplifier will produce symmetrical deflection of the cathode-ray tube with either balanced or unbalanced input signals.

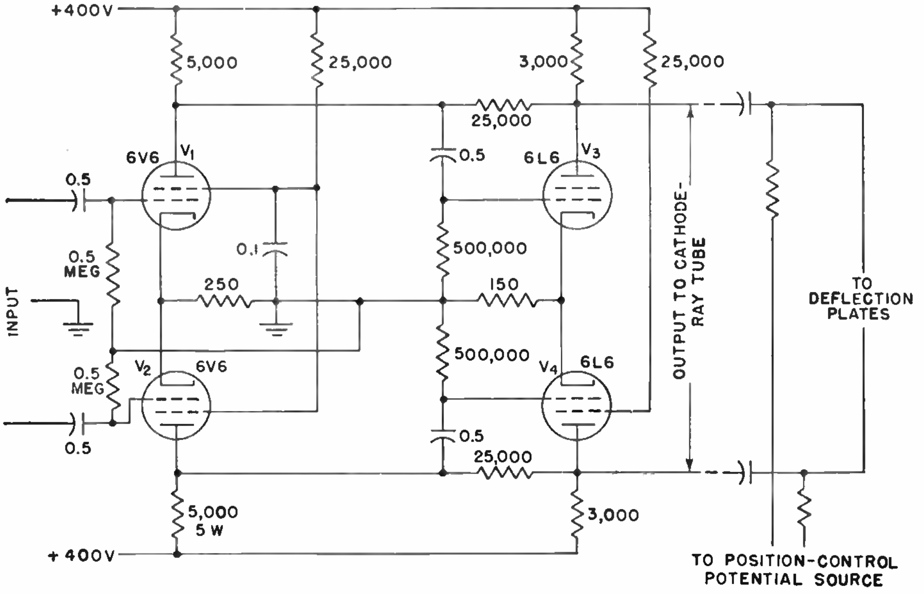

Interconnection of the plates provides a simple feedback network which is reliable over the widest possible range of frequencies that the amplifier may be required to pass. Inasmuch as the design was approached as an attempt to render the stray capacitance as ineffective as possible, the impedance level of the output circuit has been reduced by approximately 80 per cent.

G. Robert Mezger, Feedback Amplifier for C-R Oscilloscopes, *Electronics*, April, 1944, p. 126.

Direct-coupled Amplifier Circuit for Feeding Deflection Plates of C-R Tube

By using a cathode follower with gas-tube coupling, this circuit gives a voltage gain of 400 with a frequency response flat to within 1 db from below 20 cycles to 10 kilocycles. Use of this arrangement eliminates some of the difficulties normally encountered in the use of direct-coupled amplifiers for feeding deflection plates in an oscilloscope. Extremely high voltage supplies are not required, and voltage drift due to leakage and warm-up is reduced.

The first stage is connected as a normal voltage amplifier. The grid of the second stage, a cathode follower, is connected directly to the plate of the first. In the output circuit of the cathode follower are two VR150 tubes and a resistor. Most of the d-c voltage drop occurs across the gas tubes, while the signal voltage appears across the 12,000-ohm resistor. The impedance of the VR tubes tends to rise at the higher frequencies, and a bypass capacitor is therefore connected across the tubes to raise the high-frequency response. The last stage in the circuit consists of a 6SN7 dual triode used as a cathode-coupled phase inverter, outputs of opposite polarity being obtained from the plates.

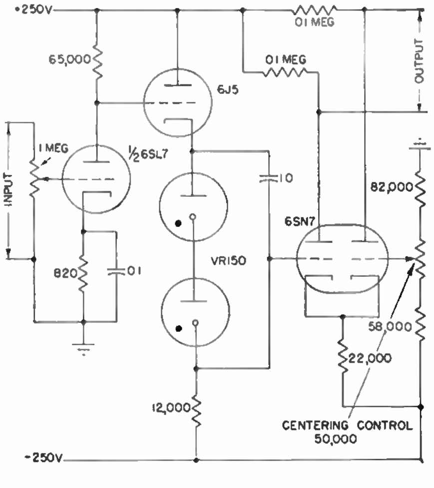

This gas-tube coupling should be used only where the signal level is sufficiently high so that the gas discharge noise in the VR tubes is negligible. The signal voltage drop across the VR tubes should be kept to less than 0.5 volt (and to less than 1 or 2 volts if neon tubes are used, depending upon the type of tube and the d-c flow), or distortion will result.

F. Iannone and H. Baller, Gas-tube Coupling for D-C Amplifiers, *Electronics*, October, 1946, p. 106.

Four-circuit Electronic Switch for Cathode-ray Oscilloscope

In this system for observing four independent electrical phenomena on a cathode-ray-tube screen, a simple linear scan is divided into four components, each following in succession. A pure sine-voltage wave is impressed on the grid of triode T_5, and the grid bias is held at a sufficiently high negative potential so that the tube will pass current for only one-fourth cycle, corresponding to the positive peak of the wave. The negative grid-bias voltage necessary to accomplish this is 0.707 of the peak impressed voltage. A second tube T_4 passes the negative peak. The remaining two quarters of the cycle are selected by displacing the wave 90 degrees in phase and repeating the process, using triodes T_2 and T_1. As a final result, the trace on the screen of the oscilloscope will consist of four scallops.

Tube T_1 is simply a controller of amplitude. It receives the input wave from a sine-wave generator whose frequency is identical with that of the horizontal sweep of the oscilloscope. The frequency for which the circuit values apply is 2,000 cycles, but the scan can vary from 1,000 to 3,000 cycles.

The phase-shift circuit is connected between transformer secondaries L_1 and L_2, which are matched audio input units whose center taps connect to C_4 and C_5.

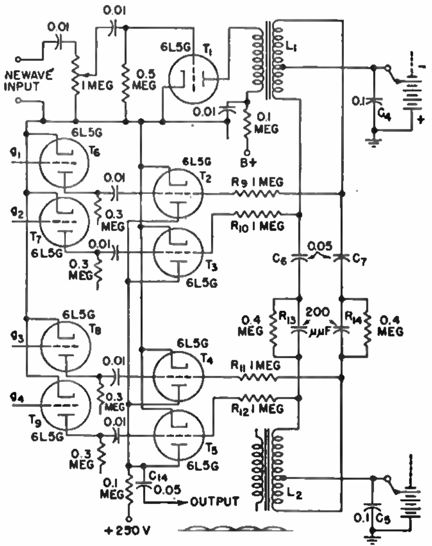

The primary winding of L_2 is not used. C_6 and C_7 act to block the grid-bias voltages. C_8 and C_9 together with resistors R_{13} and R_{14} shift the phase of the wave in L_2 90 degrees from the wave in L_1. The extremities of L_1 and L_2 are accordingly points of 180-degree phase difference. They are connected through individual resistors R_9, R_{10}, R_{11}, and R_{12} to the grids of tubes T_2, T_3, T_4, and T_5. The output signals are passed through C_{14} to the oscilloscope vertical input.

The wave crests act as switches for admitting four independent sources of signal. Tubes T_2, T_3, T_4, and T_5 operate in succession each for one-fourth of the cycle. Four additional tubes T_6, T_7, T_8, and T_9 act as buffer amplifiers. The pickup points are the grids g_1, g_2, g_3, and g_4. Means for either amplifying or attenuating the input at each of these points should be provided so that the area projected on the screen of the oscilloscope can be regulated.

It is important that the common plate circuit of tubes T_2, T_3, T_4, and T_5 be adequately shielded against any stray potentials. The success of this circuit depends on the care with which stray coupling capacitances are kept at a minimum.

Esten Moen, A Four Circuit Electronic Switch, *Electronics*, May, 1941, p. 50.

Circuit for Obtaining Mutual-conductance Characteristic Curves of Tubes

The mutual-conductance grid-voltage characteristic curve of an amplifier tube can be traced with this circuit by using the tube as a high-frequency amplifier with a low-impedance load in the plate circuit and a small grid signal and by plotting the rectified output against the variable grid voltage. The signal is supplied by a 175-kc oscillator to the grid whose mutual conductance is under consideration.

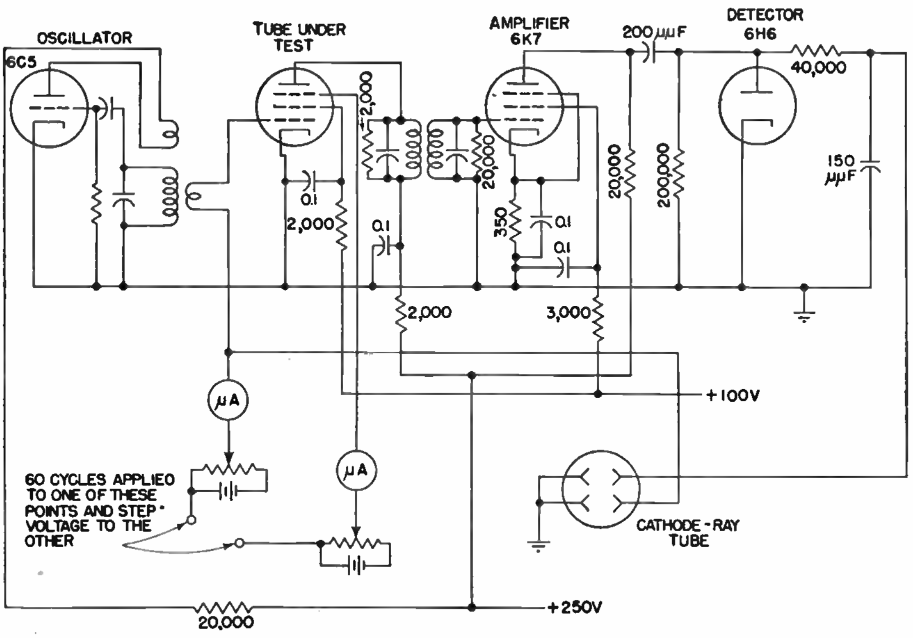

To plot No. 1 grid mutual conductance against No. 1 grid voltage for various No. 3 grid voltages, the signal and a 60-cycle voltage are applied in series to grid No. 1, and the step voltage, generated as in a circuit for obtaining amplifier-tube characteristic curves, is applied to the No. 3 grid. The output of the detector feeds the vertical deflection plates of the oscilloscope, and the horizontal deflection plates are supplied by the same 60-cycle voltage as the grid of the tube under test. It is desirable to include a microammeter in the lead of each grid having one of the variable potentials, in order to adjust the minimum bias to zero. The order of magnitude of the deflecting voltages obtained from this circuit is such as to require an oscilloscope having an amplifier in each of the deflecting plate circuits.

H. F. Mayer, Cathode Ray Oscillograph Applications, *Electronics*, April, 1938, p. 14.

Cathode-ray Oscilloscope Circuit for Obtaining Amplifier-tube Characteristic Curves

This circuit provides a family of curves of plate current versus plate voltage for various equally spaced grid voltages in multielement amplifier tubes. As the desired curve has plate voltage for its abscissa and plate current for its ordinate, one of the horizontal deflection plates of the cathode-ray tube is connected to the cathode of the tube under test (T_1) and the other to the anode. The vertical deflection plates are connected across a resistor R_1 to receive a voltage proportional to the plate current. Then an alternating voltage of any wave form and frequency may be applied to T_1 and R_1 in series and the spot will move always along the curve of plate current versus plate voltage. During each negative half cycle the spot remains stationary at the origin.

To trace a complete family of curves for various grid voltages, the grid voltage must be held constant during positive half cycles while the spot is moving and changed by a fixed increment during negative half cycles. This is accomplished by charging the capacitor chain $C_1C_2C_3$ through the pentode T_4 in steps and by finally discharging it through the thyratron T_3. $C_1C_2C_3$ is charged in steps due to the fact that the pentode T_4 has an alternating voltage on its screen and control grids, and hence conducts only during alternate half cycles.

The voltage E_5 is phased with respect to E_1 so as to make T_4 conduct during negative half cycles of E_1. Since the current passed by T_4 is substantially independent of its plate voltage, so long as it exceeds the screen voltage, the increments of charge applied to $C_1C_2C_3$ are equal. The amount of the increment depends upon the setting of the screen potentiometer P_3. When the voltage on $C_1C_2C_3$ reaches a value determined by the setting of P_1, the thyratron fires and discharges $C_1C_2C_3$.

Three capacitors ($C_1C_2C_3$) instead of one provide three ranges of maximum bias voltage. Resistors R_1, R_2, and R_3 permit a reasonable grid-leakage current to flow in the tube under test. Potentiometer P_2 across battery E_2 permits adjustment of the minimum bias to zero, which it would otherwise not be, since the thyratron may discharge the capacitors to almost any voltage, depending upon the circuit constants. The microammeter in the grid circuit of the tube under test facilitates the adjustment of P_2.

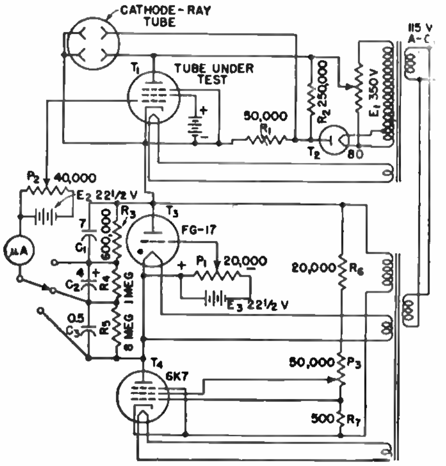

H. F. Mayer, Cathode Ray Oscillograph Applications, *Electronics*, April, 1938, p. 14.

Ignitron and Cathode-ray Circuit for Testing Pulse-type Power Tubes

This pulse-type high-power tube tester obtains simultaneous measurements of plate voltage, plate current, grid voltage, and grid current at the crest of the grid-current curve of a triode when the grid current is made to vary as a pulse of very short duration.

An electrically operated commutator alternately applies to a cathode-ray oscilloscope a signal from the tube tester or a signal from a calibrating circuit. When the tube tester is connected to the oscilloscope, a voltage proportional to the grid current is applied to the horizontal plates, while the vertical deflection is produced by either the plate voltage, plate current, or grid voltage as desired. The operator obtains readings of the peak values by matching a calibrating spot with the end of the characteristic curve as seen on the long-persistence screen of the oscilloscope.

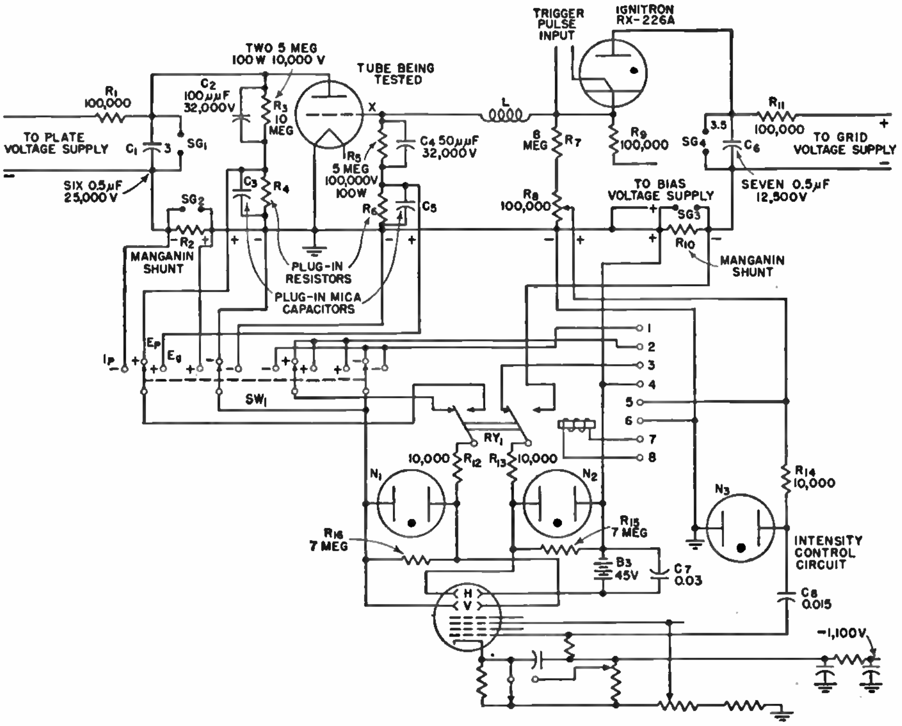

The apparatus was designed to test tubes of the types used for loran. The tube can be supplied with plate-current pulses of 200 amperes at plate voltages up to 20,000 volts. The grid voltage may be varied from −5,000 to +10,000 volts.

The measuring circuit is shown. The grid current is measured in terms of the voltage across a noninductive shunt R_{10}. This voltage is applied directly to the horizontal plates of a cathode-ray oscilloscope. The plate current is measured in similar fashion by applying directly to the vertical plates of the oscilloscope the voltage across the noninductive shunt R_2. By means of switch SW_1, the vertical plates may be connected across R_2 for plate-current measurement, across R_4 for plate-voltage indications, or across R_6 for determining the grid voltage. Complete shielding of all portions of the measuring circuits is most essential in this method because of the use of pulses having high rates of change of current.

The combination $C_2C_3R_3R_4$ forms a compensated voltage divider to supply a known fraction of the plate voltage to the oscilloscope. Similarly, $C_4C_5R_5R_6$ form another compensated voltage divider for the measurement of grid voltage. Each voltage divider is carefully adjusted with the aid of a square-wave generator, so that when a square wave of voltage is applied across the divider a good reproduction of the square wave appears across the low-voltage section.

The high-voltage section of each divider is enclosed in an aluminum shield. The low-voltage section plugs into sockets mounted on the shield. The shield and the bottom of the low-voltage section are grounded to a common point which serves also as the ground connection for the tube to be tested, for the cage which holds the apparatus, and for shunts R_2 and R_{10}. By the use of a common ground point, ground currents are kept out of the cage and shields, and thus magnetic disturbances from ground currents are minimized.

Connections from the voltage dividers and shunts to the oscilloscope are made through coaxial cable. The grounded side of each shunt and voltage divider is connected to the outer conductor of the corresponding cable. All these cables run to a junction box that contains switch SW_1 and relay RY_1. The junction box is grounded to the common ground point, but all cable connections are insulated from the box. Thus, if, because of very heavy tube currents, the grounded side of a cable should be at a different potential from ground, one part of the tube current would flow through the outer conductor of the cable. With these precautions in grounding and shielding, no magnetic pickup or interaction between circuits is observed.

The impulse of grid current is controlled by the ignitron RX226A. When the trigger circuit causes the ignitron to fire, the voltage on capacitor C_6 is applied between grid and cathode of tube X. The inductance L retards the rise and fall of grid current sufficiently to provide a grid-current pulse that rises rapidly and then holds a rounded peak for several microseconds before dropping.

Before the ignitron is fired, the grid of tube X is kept at a negative potential by a bias power supply acting through R_9. This negative bias is adjustable to a maximum of 5,000 volts and is set at a value that is sufficient to hold the plate current to a negligible value over the normal range of plate voltage. By means of voltage divider R_7R_8 a portion of the grid voltage is fed to the intensity control of the oscilloscope. When the ignitron fires, the intensity of the electron beam is greatly increased, and the rapidly formed trace is made visible on the long-persistence screen. (Battery B_8 serves to position the electron beam to the left of the center of the screen.)

The oscilloscope beam is deflected horizontally by the grid current and vertically by the plate voltage, plate current, or grid voltage, depending on the setting of SW_1. When the grid current is at its peak, the beam is deflected to a maximum horizontally. Hence, if observations are made on each vertical signal at the extreme of the horizontal deflection, all readings are obtained at the peak of the grid current.

An auxiliary circuit, not shown, is used for calibration and triggering of relay RY_1. This circuit includes a motor-driven 5-rpm commutator that fires the ignitron. To ensure the safety of both operator and equipment, various protective devices are provided. Bulbs N_1, N_2, and N_3 are ¼-watt neon bulbs. Should a flashover occur in any of the high-voltage circuits, these neon bulbs together with resistors R_{12}, R_{13}, and R_{14} would prevent the voltages applied to the oscilloscope from exceeding a value of approximately 70 volts.

Spark gap SG_1 is set to break down at 20,000 volts in order to protect C_1, which is rated at 25,000 volts. Gap SG_4 breaks down at 10,000 volts in order to protect the 12,500-volt capacitors at C_6.

Paper gaps SG_2 and SG_3 are designed to break down and form a mechanical short circuit if excessive voltage should appear across either shunt R_2 or R_{10}. These gaps each consist of a spring whose pointed end presses against a brass plate. A piece of thin paper is placed between the point and the plate. If excessive current should be passed through the shunt, the paper is punctured, the spring makes contact with the plate, and the shunt is short-circuited.

It is advisable to keep the oscilloscope signal voltages between 25 and 50 volts. Voltages below 25 give deflections whose short length increases errors in measurement. Voltages much in excess of 50 volts may cause the neon protective bulbs to ignite and give a false indication.

To keep the oscilloscope voltage within the required range when measuring grid or plate voltages, each voltage divider is provided with several different low-voltage sections. Thus the plate-circuit voltage divider has four low-voltage sections providing voltage ratios of approximately 50, 100, 200, and 400. These ratios cover the voltage ranges 0 to 2,500, 2,500 to 5,000, 5,000 to 10,000, and 10,000 to 20,000, respectively.

Similarly, shunts of different value are provided for R_2 and R_{10}. For R_2 the available resistances are approximately 2, 1, 0.5, and 0.25 ohms, covering the current ranges 0 to 25, 25 to 50, 50 to 100, and 100 to 200 amperes, respectively.

E. C. Easton and E. L. Chaffee, Pulse-type Tester for High Power Tubes, *Electronics*, February, 1947, p. 97.

Circuit for Injection of Identifying Marks on Cathode-ray Traces

The viewing of a curve on the screen of an oscilloscope is often more effective if means are provided to inject identification marks at known points on the curve. The generator here described can inject sharp breaks in any sinusoidal wave of frequency from 60 to slightly under 1,000 cycles per second.

The circuit utilizes coupling between the plates of two amplifiers to generate the marking pulses. When the first plate tends to draw current, the current in the second plate (which is in opposite phase) is suddenly reduced by the reduction in plate voltage. The result is a sharp differential pulse at each change in input voltage.

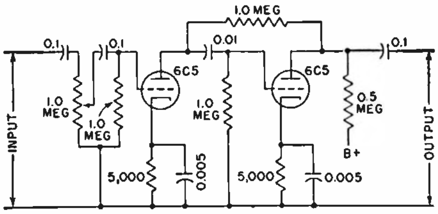

Esten Moen, An Electronic Oscilloscope Marker, *Electronics*, September, 1941, p. 68.

Oscilloscope Beam Blanking and Dotting Circuit

This three-tube electronic circuit permits photographing a complete transient trace on a cathode-ray oscilloscope screen with high detail and no fogging, using from one to five sweeps per transient depending on the degree of horizontal detail desired. Arrival of a transient trips a trigger circuit, releasing the blanked beam, and can also provide a dotted Z timing wave.

The double-triode trigger circuit and its power supply must be insulated from ground for a voltage equal to the operating voltage of the cathode-ray tube, which means using a power transformer with an adequately insulated primary winding or using a 1:1 insulating transformer.

When one section of VT_1 is conducting, the other section is automatically biased to cutoff. Consequently, either one or the other section is conducting, but never both at the same time. An impulse transmitted to the grid of one section, in such a direction as to change the state in which it is at that instant, will therefore cause the circuit to go from one condition to the other.

One of the sections of VT_1, designated as a, performs the desired control action on the grid of the cathode-ray tube. When section a is nonconducting, the drop across plate resistor R_1 is small, since the only current flow through it is due to the current flowing through the high resistances R_2 and R_3. Point A will therefore be only a few volts negative with respect to the positive end of the power supply.

The cathode of one section of double diode VT_2 is connected to point A. The anode of this section is connected through resistor R_4 to point D on potential divider R_5, which is adjusted so that D is negative with respect to point A as long as tube section a is nonconducting. Consequently, no current flows through R_4, and the potential of the grid of the cathode-ray tube with respect to the cathode is simply determined by the position of the arm on R_5. This permits manual adjustment of the grid voltage of the cathode-ray tube to give any desired brilliancy, or to blank the beam if so desired.

If section a of VT_1 is made conducting, however, the plate current will cause a large voltage drop across R_1. This makes A negative with respect to D, and current will flow through the right-hand section of double diode VT_2 to increase the grid bias of the cathode-ray tube over and above any value to which it may have been adjusted by the slider of R_5. Consequently, by triggering the double triode from one condition to the other, a release or blanking of the beam may be obtained. A negative impulse administered to the grid of section a, or a positive impulse administered to the grid of section b, will make section a nonconducting and thus release the beam. Impulses of the opposite polarity will correspondingly blank the beam again.

The left-hand section of the double diode is used to provide the dotting signal. Application of the proper type of signal (preferably of a square-wave shape in order to avoid defocusing during the duration of the dot) through blocking capacitor C_1 causes an alternating current to flow through resistor R_6, which (during its negative half wave) will cause a current flow through the left-hand section of the double diode, thus periodically biasing the grid of the cathode-ray tube.

It should be noted that blanking and releasing require only an impulse and not the maintaining of a certain voltage during the time that the beam is to be released.

The complete equipment can be made as a separate device which can be used with any oscilloscope on which the cathode and grid terminals have been brought out, or it can be permanently incorporated in one of the oscilloscopes available on the market.

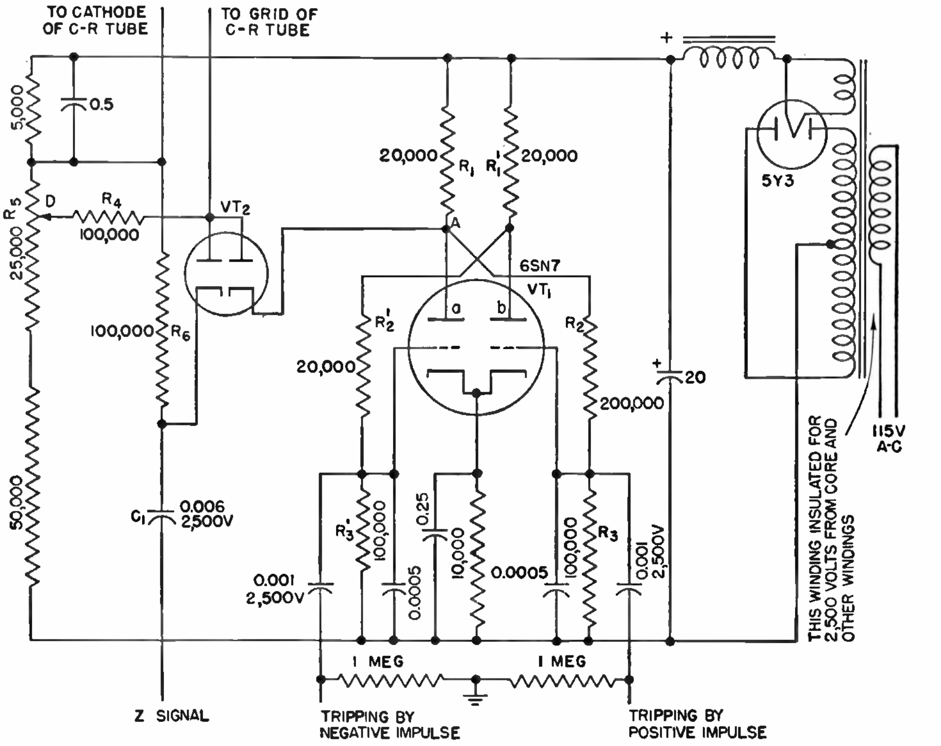

Walther Richter, Beam Blanking Circuit for Oscilloscopes, *Electronics*, September, 1944, p. 128.

Oscilloscope Circuit Modification for Television Modulation Pattern

If a commercial oscilloscope is modified as shown, the technique of employing a trapezoidal pattern to measure modulation may be adapted to television, such as for determining the percentage of carrier amplitude devoted to synchronizing pulses and hence compliance with the standard.

The modification necessary consists of providing a linear horizontal sweep at half the line or frame scanning frequency and adapting the input circuits to the television carrier frequencies.

Use of the type 5JP1 cathode-ray tube is advantageous, since the deflection-plate leads terminate on the bulb. This feature minimizes capacitance coupling between horizontal and vertical plates, and it simplifies the r-f circuit. It is desirable to shield the tube electrostatically by wrapping it in a sheet of copper foil and to provide an aluminum, or brass, case for the whole instrument. In addition to shielding it is wise to isolate the leads from the horizontal sweep amplifier by some resistance to prevent any possibility of resonance in these lines. For this purpose 1,000 ohms was found satisfactory.

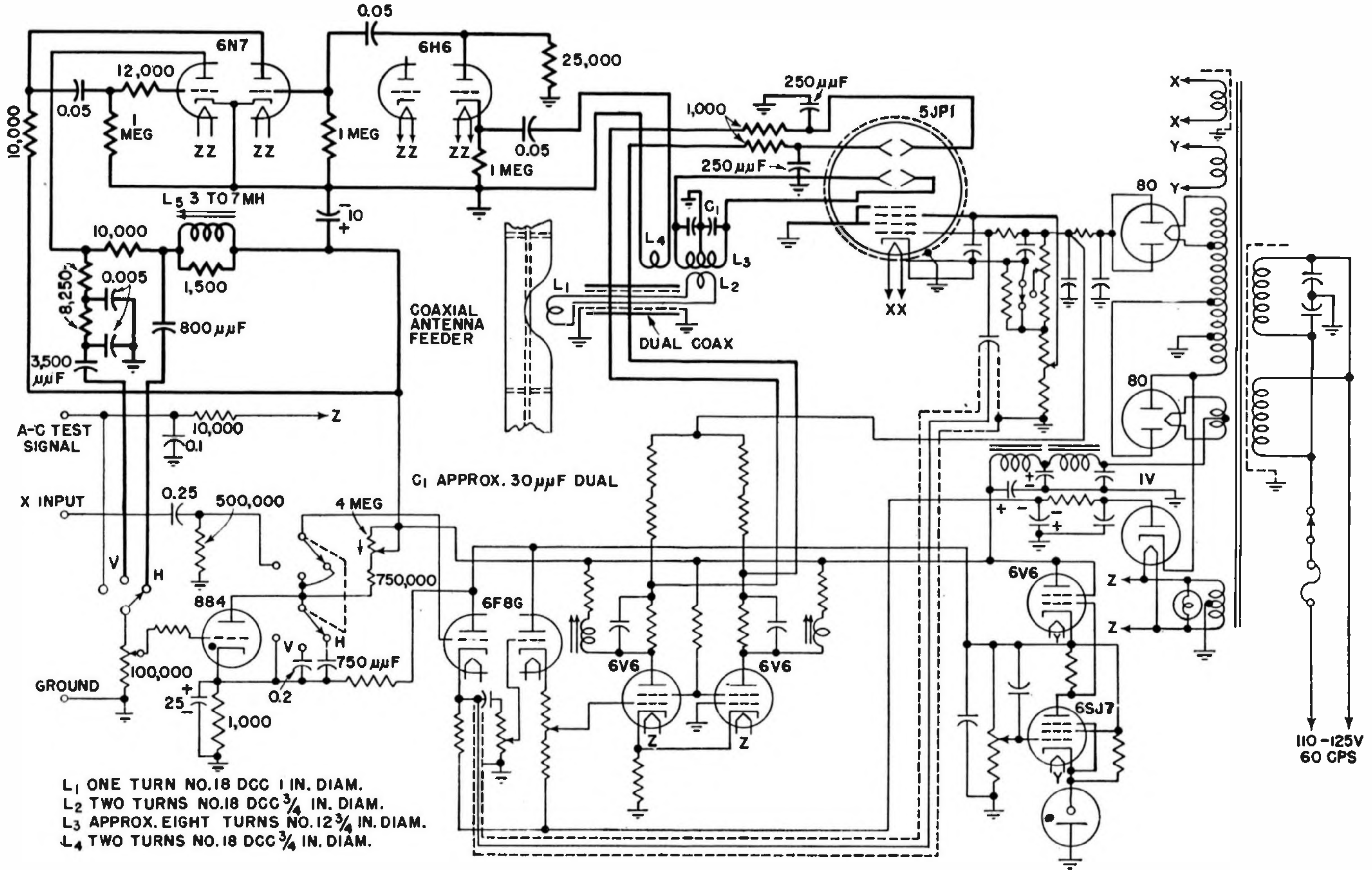

Filament, anode, and bias supply circuits are those commonly employed in most oscilloscopes, with the exception that the high-voltage supply should have a positive ground. This feature is important since it permits the grounding of the center tap of the tuned circuit and the use of low-voltage r-f bypass capacitors on the horizontal deflection plates. The plate supply of the critical stages of the the sweep amplifier is regulated, and the horizontal sweep oscillator and amplifier are similar to those of conventional oscilloscopes with the exception of the synchronizing circuit and sweep-speed control.

The most critical consideration when using very high frequencies for vertical deflection is the tendency of these voltages to stray over to the horizontal deflection plates, causing a curvature of the parts of the pattern that should be vertical. The resulting image distortion can be prevented by symmetrical voltage distribution in the r-f circuit and effective r-f bypassing of the horizontal deflection-plate leads.

Capacitors must be selected that will have a low reactance at carrier frequency but a high reactance through the tenth harmonic of the horizontal sweep frequency. A 250-$\mu\mu f$ capacitor has a reactance of 10.7 ohms at 60 megacycles and 8,100 ohms at 7,875 × 10 cycles, and it gives good results. The frequency 7,875 is half the 15,750 cycles required for horizontal scan in 525-line television. This sweep frequency permits patterns of two scan lines to be shown on the screen.

The vertical deflection plates are driven by a tuned circuit that provides enough voltage at resonance to produce adequate deflection with small power input. In the lower group of television channels, 44 to 88 megacycles, a split-stator capacitor of 20 to 30 $\mu\mu f$ per section is used for tuning. It is not necessary to load the circuits to pass the wide side band, since the highest frequency components in the extremes of the side band are not necessary for ordinary measurements.

The center of the coil feeding the vertical deflection plates must be grounded to provide the required d-c potential on these plates. The rotor of the tuning capacitor may also be grounded. This common ground must be connected to the shield on the cathode-ray tube by a strap, ribbon, or wire of large area and as short length as is feasible. Such an arrangement ensures symmetry of voltage on the vertical deflection plates and reduces coupling to the horizontal plates.

A coil suitable for the lower group of television frequencies can be wound with No. 12 wire on a ¾-inch form. An 8-turn coil of this diameter has been found suitable for the 60- to 66-megacycle channel. One or two turns more or less will be required for other channels of the group. To secure a balanced feed, a dual coaxial line is desirable.

Coupling coils at the input and output of the feed line are connected to the inner conductors and not to the outer sheath. The feed-line input coil is a ¾-inch 1-turn loop inserted part way into an opening in the outer conductor of the transmitting antenna coaxial line just outside the transmitter cabinet. Where the coaxial line enters the oscilloscope cabinet, the outer sheath must be grounded to the metal cabinet. The cable terminates in a 2-turn coil of ¾-inch diameter and is loosely coupled to the tuned circuit of the oscilloscope.

Since such a loop cannot be expected to provide an entirely nonreflecting termination, there will be some standing waves in the line, and some degree of unbalance in spite of precautions. Coupling between loop and tuning coil is adjusted by trial, inserting the loop a small distance between the turns of the coil; the most effective point may be found one or two turns above or below center. Because of standing waves in the line the loop can be initially at a low-current point in the standing-wave pattern, in which case the line can be shortened somewhat.

Synchronizing voltage for the horizontal sweep may be taken from a video line if available, or, if more convenient, it may be taken from the r-f signal. The detector circuit shown is suitable for either method.

A small pickup coil of 2 turns is loosely coupled to the lower end of the tuned circuit and applies about a volt to the cathode of the 6H6 tube. This tube is located directly below the pickup coil so that the leads are kept short. Peaks of the r-f signal corresponding to the synchronizing pulses are rectified, biasing the cathode of the diode positively so that only synchronizing pulses appear in the plate circuit.

The diode performs the two functions of rectifying radio frequency and clipping off picture components. Negative impulses appear across the plate load resistor. If video signals are used for synchronizing, they may be applied to the diode that will serve in the same way to separate synchronizing pulses from the picture. If the pulses are negative with respect to ground, the signal is applied to the cathode of the 6H6 tube in the same manner as the r-f signal. If the pulses are positive, they are applied to the plate of the diode through a network consisting of a 0.05-μμf capacitor and a 1-megohm resistor. The output is then taken from the cathode across a 25,000-ohm load resistor. In this case the output pulse is positive.

The output pulses from the detector are amplified by the two-stage amplifier utilizing a type 6N7 tube that operates without external bias, since the plate current is sufficiently limited by the 10,000-ohm plate resistors. As long as there is a substantial signal applied to this amplifier, grid rectification provides bias for the tube. The time constants of the grid resistor and coupling-capacitor networks are large enough to permit amplification of the 60-cycle field scanning impulses.

Impulses passing through the amplifier will usually be of both line and field frequencies. It is the function of the two networks in the plate circuit of the left section of the 6N7 tube to separate the two frequencies so that either can be applied to the horizontal sweep oscillator of the scope.

The network consisting of two 8,250-ohm resistors and 0.005-μf capacitors separates by integration the vertical pulse from the composite of both pulses. After separation the pulse is partly differentiated by the 3,500-μμf coupling capacitor and the 884 tube grid resistor, producing both a positive and negative pip. Therefore the polarity of the pulse from the 6N7 amplifier is unimportant, since the 884 tube will always receive a positive impulse on which it synchronizes best.

The horizontal pulses are separated from the vertical by differentiation in L_5. Again a positive and negative swing is produced, in order to synchronize the 884 tube.

Switching circuits are provided to select synchronizing voltage from either the vertical or horizontal separator output or from the 60-cycle line.

Appropriate *RC* networks can be switched into the plate circuit of the 884 tube to generate suitable saw-tooth waves at 30 and 7,875 cycles for sweep speeds to show either frame or line patterns. Provision is made for external deflection for special cases. A potentiometer in the plate circuit of the 884 tube permits continuous adjustment of sweep frequency over a range from three or four lines or frames to one line or frame.

The saw-tooth output of the sweep oscillator is amplified by a 6F8G and two 6V6 tubes in a conventional circuit before being applied to the horizontal deflecting plates. A back-trace blanking impulse is fed to the cathode-ray tube from the cathode circuit of the 6F8 tube.

A. H. Brolly and W. R. Brock, Test Oscilloscope for Television Stations, *Electronics*, November, 1946, p. 120.

Dual-multivibrator Raster-generating Circuit for Cathode-ray Tubes

Two multivibrators, one controlled by 60-cycle line voltage and the other running free at about 2,500 cycles, are employed in this arrangement to generate deflecting voltages for production of a raster, or test, pattern covering the entire face of the cathode-ray tube during life tests. Up to three cathode-ray tubes may be paralleled for simultaneous testing merely by adding a pair of focus and brilliance potentiometers for each in parallel with the controls shown.

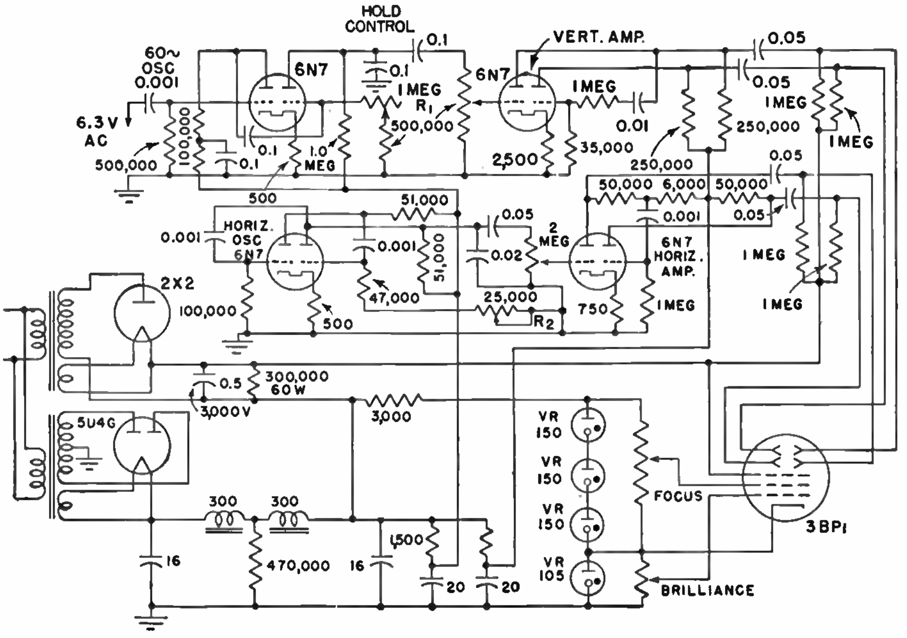

The 60-cycle sweep is synchronized with the line voltage by adjusting hold control R_1, and the horizontal sweep frequency is controlled by R_2. For life tests it is not necessary to lock the pattern stationary. Output voltages of both multivibrators are fed to individual amplifiers connected as phase inverters to provide balanced-deflection outputs for coupling to the deflection plates through suitable high-voltage capacitors. An *RC* network is used to separate the two oscillators and amplifiers, so as to prevent one pattern from modulating the other. The circuit can readily be adapted for other cathode-ray tubes by changing power-pack output voltages as required.

Leonard Chioma, CR Tube Life Tests, *Electronic Industries*, January, 1945, p. 107.

CONTROL CIRCUITS

A Shorted-turn Indicator for Small Coils

Coils wound on integral spools and loudspeaker voice coils with centering spiders cannot be tested on an iron-core coupling device. For such coils, the shorted-turn finder shown in the diagram can be used.

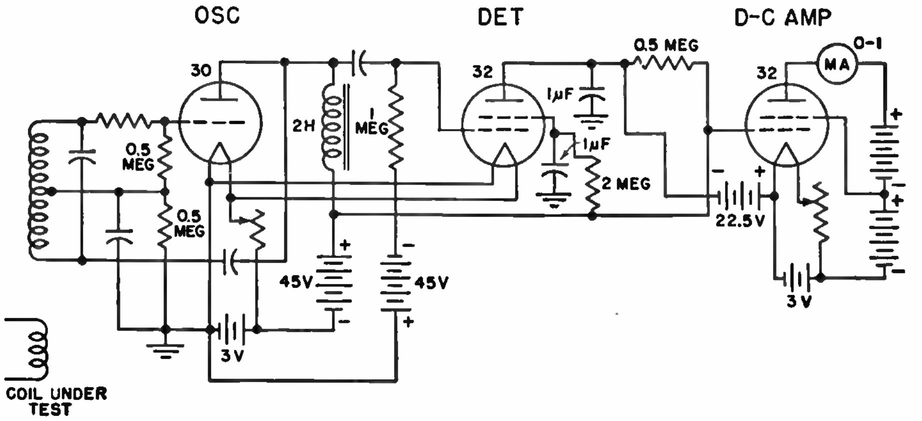

Since a test frequency many times higher than 60 cycles is permissible for these small coils, a vacuum-tube oscillator is used as the a-c source. The operating principle is that an oscillator's tank-circuit voltage will vary in accordance with the rate of absorption of energy from the tank circuit. The tested coil is coupled to the tank inductance, which is coupled to a detector, the detector in turn actuating a d-c amplifier having the indicating milliammeter in its plate circuit. Any absorption by the tested coil results in reduced detector input, and a consequent reduced reading of the indicating meter.

A resistance network in the oscillator grid circuit prevents high damping of the tank-circuit oscillations during positive grid-voltage excursions and reduces the input voltages to the tube, thereby curtailing harmonics. Large harmonics are avoided because of their greater tendency to set up spurious absorption currents in a tested coil. The oscillator is tuned to approximately 8,000 cycles.

The tank inductance consists of 950 turns of No. 20 enameled wire, compactly wound in solid layers, with thin paper between layers. The winding cross section is approximately 1⅛ inch square. The window of the winding is just slightly larger than the largest diameter coil to be tested. The tank coil is housed in a protective Bakelite shell, and is mounted on a tilt of 45 degrees near the bottom of the test panel.

Half the tank-circuit a-c voltage is impressed upon the detector, which is supplied a compensating negative bias of 45 volts through 1 megohm.

The d-c amplifier is operated by separate batteries, the only connection to the remainder of the circuit being the 0.5-megohm resistor common to the detector plate and the amplifier grid circuits. Since this resistor places a positive bias on the amplifier grid, a counteracting bias battery of 22½ volts is included in the grid circuit to keep the amplifier plate current below 1 ma. The normal plate current is thus set at approximately 0.8 ma, a downward swing indicating shorted turns.

To test a coil, it is inserted into the window of the tank coil. A large reduction in the reading of the milliammeter indicates shorted turns, good coils giving practically unchanged deflection. One closed turn ½ inch in diameter of No. 35 wire reduces the indicating meter deflection 0.6 ma.

C. G. Seright, A Shorted-turn Indicator, *Electronics*, May, 1933, p. 136.

Shorted Turns Tested on Simple Instrument

A useful instrument for the rapid testing of coils is shown in the accompanying circuit. Reactance of search coil *L* is balanced by capacitance *C*. Exact balance of the bridge is obtained with resistor R_2, resistor R_1 being in the mid-position.

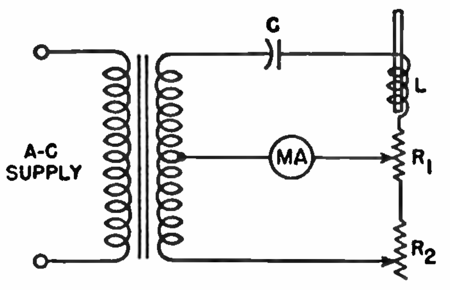

The instrument is then adjusted for a-c supply by varying R_1 until a standard reading is obtained on the rectifier-type milliammeter *MA*. The coil to be tested is placed over the projecting iron core of the search coil; if short-circuited turns are present, the normal deflection of the meter will change.

A single short-circuited turn of 40-gage copper wire can be detected.

Testing Coils for Shorted Turns, *Electronics*, November, 1945, p. 394.

Audio-frequency Oscillator Finds Breaks in Cords and Cables

This electronic cable tester takes the guesswork out of checking the breaks in electric extension cords and those used on small power-driven tools.

The circuit of the unit uses one electronic tube connected as a self-excited oscillator operating on a frequency of about 400 cycles. The output of the oscillator is applied to the cord.

A small amount of the signal energy is picked off the cord by a metal ring through which the cord is passed. Fed to a high-gain amplifier, the signal amplitude is increased sufficiently to operate the output meter shown. When a break in the conductor passes through the ring, a sudden change in the meter deflection occurs, and the broken spot can be quickly and accurately ascertained. Thus the necessity of cutting the cord in more than one place to locate the break is eliminated.

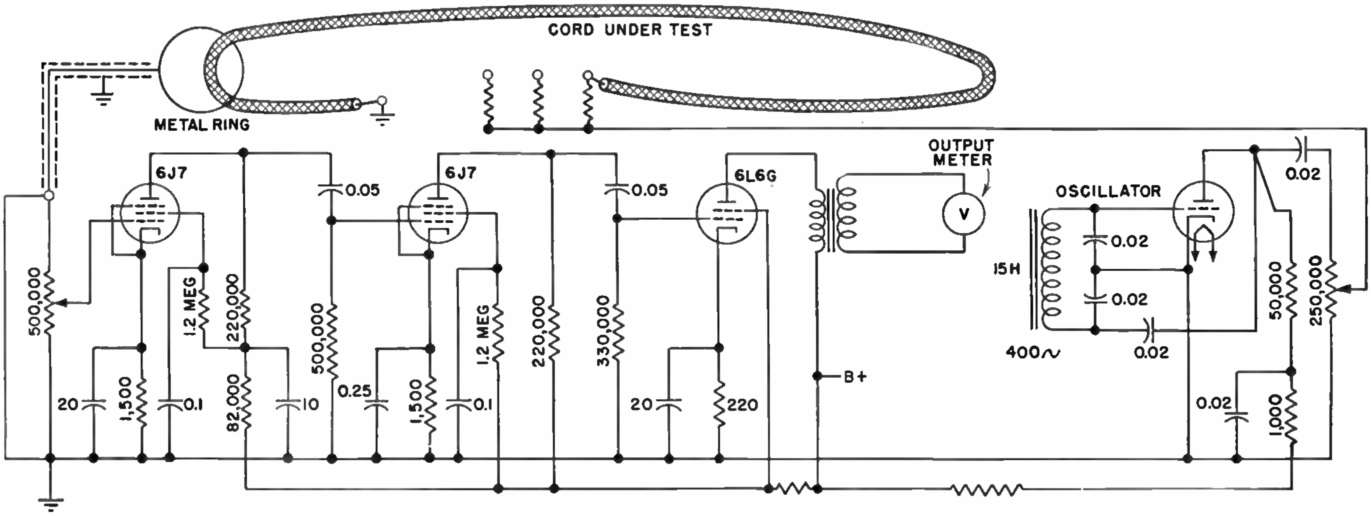

The metal pickup ring is mounted inside an assembly of fiber insulation material that surrounds the cable during use of the instrument. A short shielded lead is provided for connecting the ring to the amplifier. The ring is mounted on top of the test unit.

Input and output potentiometers are provided to permit adjustment of the circuit, so that the meter reading occurs at a convenient portion of the scale when a good cable of the type to be tested is inserted in the ring. Additional provision for this purpose is the use of different values of resistance in the output circuit. Besides the output terminals shown, male and female receptacles for the cable plugs are contained in the tester.

Electronic Tester for Electric Cords and Cables, *Electronics*, September, 1944, p. 186.

Sensitive Splice-detector Circuit for Steel Wire

This splice detector utilizes magnetic poles created at splices in steel wire to operate an audible and visual alarm.

The wire under test is magnetized longitudinally by passing it through a strong magnetic field. It is then passed through a detector coil in which voltages are generated by the motion of the magnetic poles produced at the discontinuities. The voltage thus generated is amplified and impressed upon a thyratron trigger tube that operates a buzzer, giving an audible signal. The buzzer is also connected to a telephone receiver, which allows the signal to be heard in noisy locations. A visual signal is provided by a cathode-ray tube.

The sensitivity of the apparatus is such that it is possible to detect a single-strand splice in paired wire containing a total of 14 steel strands.

The magnet assembly consists of two horseshoe magnets having very high field strength. They are held against a square brass bar, with the two north poles facing each other. The wire passes through a ⅜-inch longitudinal hole in the bar. The small size of the hole ensures uniform magnetization of the wire. Its length prevents sidewise motion near the magnetic poles.

The detector coil consists of 2,500 turns of wire wound on a wooden spool, which has a ⅜-inch hole in the core for passage of the wire. The minimum dimension of the coil is such that the turns can be placed in close proximity to the wire which passes through. The coil is made sufficiently long to prevent voltages being generated due to whipping of the wire. The coil mounting is made of wood.

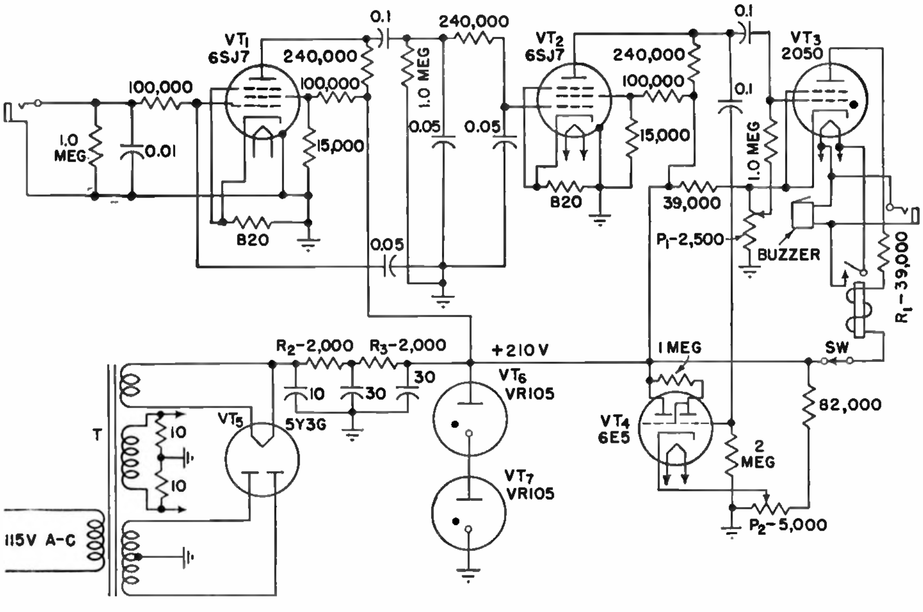

Voltages due to irregularities in the wire, generated in the detector coil, are fed into a two-stage voltage amplifier utilizing tubes VT_1 and VT_2. The amplifier output operates a thyratron trigger tube VT_3, which operates a buzzer through a relay.

Filtering is employed in the input circuits of each stage to attenuate high-frequency voltages picked up in the coil.

It has been found that minute magnetic irregularities in the wire cause such high-frequency voltages to be generated, and these voltages might trigger the thyratron were it not for the input filters.

The normal frequency of an impulse generated at wire splices is 10 to 30 cycles, depending upon the speed of the wire as it travels through the coil.

The thyratron detector is a gas tube. The plate-circuit d-c relay operates on 10 milliamperes. Resistor R_1 is placed in series with the relay winding to restrict the plate current of the thyratron to the limits of the relay winding, the tube, and the power supply. There is also a normally closed switch *SW* in the plate circuit, the operation of which will restore the trigger circuit after the tube has operated. The sensitivity control P_1, in the trigger-tube input circuit, permits the bias on the grid to be varied through a range of 0 to 12 volts negative for close adjustment of trigger action.

A visual signal is obtained through the use of the indicator tube VT_4, which is connected to the output of the amplifier in parallel with the trigger tube. The shadow angle, which varies to indicate voltage changes, has a sensitivity adjustment from 0 to 20 volts negative through P_2.

The magnets and the coil should be so related that the initial voltage generated in the coil will impress a positive voltage on the grid of the trigger tube, thereby reducing the negative bias on the grid and causing it to fire. The time constants of the circuit are such that if the negative half cycle of the voltage is impressed first the full effect of the succeeding positive half cycle is not realized and the circuit is less sensitive and unreliable in operation.

F. S. Hird, Wire Splice Detector, *Electronics*, September, 1945, p. 98.

Voice-operated Electronic Control Relay Using Thyratron Output Stage

This circuit was designed for turning on or off any 115-volt a-c-operated device whose requirements are within the current-carrying capacity of the relay contacts and connecting wires. By using different contacts, any d-c-operated device may be controlled in the same manner.

An ordinary magnetic type of earphone was used for the microphone. This necessitated a high-gain amplifier to provide positive control of the relay. A type 6SL7 tube, with both triodes in cascade, provides the necessary gain.

The purpose of the 884 thyratron is to energize, or deenergize as desired, main relay *A*. Once relay *A* is energized, the 884 becomes deionized and a pair of holding contacts connects one side of the relay coil to the a-c line; since the other side of the coil is tied directly to the other side of the a-c line, relay *A* will remain energized.

The current that energizes relay *A* flows through the normally closed contacts of relay *B*. Thus, if these contacts become open, relay *A* will be deenergized and likewise the controlled equipment will be turned off. To turn off the controlled device, it is necessary to energize relay *B*, thus opening its contacts. For this reason, when relay *A* becomes energized, the plate of the 884 is disconnected from the coil of relay *A* and is connected to the coil of relay *B*, so that when the 884 is fired again it energizes relay *B* instantaneously, opening its contacts and deenergizing relay *A*.

To turn on the controlled equipment, the following sequence takes place: A single word is spoken into the microphone and the resultant voltage is amplified by the 6SL7 and applied to the grid curcuit of the normally cutoff 884, overcoming the bias and causing it to fire. Since the plate-cathode circuit of the 884 is in series with the coil of relay *A* through contacts 1 and 2 of relay *A*, it completes the a-c circuit, thus energizing the relay. When this happens, the holding contacts 4 and 5 replace the circuit of the 884 and thus keep relay *A* energized. At the same instant, the plate of the 884 is connected to the coil of relay *B* through contacts 2 and 3 of relay *A*, but now the tube is no longer ionized, since its plate circuit was opened by means of relay contacts 1 and 2. This sequence turns on the controlled device, and it remains on until another sound is made.

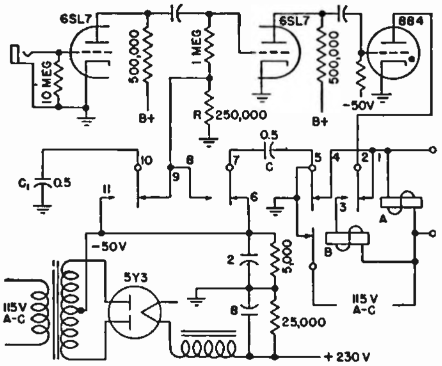

To turn off the controlled equipment, the sequence is repeated, except that this time the 884 plate-cathode circuit is in series with the coil of relay *B*, so that when the 884 is fired it energizes relay *B* and opens its normally closed contacts, thus deenergizing the main relay and returning the controlled device to the Off position. During the period when relay *A* is deenergized, capacitor *C* is connected to the minus 50-volt bias supply through relay contacts 6 and 7 on relay *A*. When relay *A* is energized, the movable contact 7 disconnects *C* from the bias supply and connects it through contact 8 to the grid circuit of the second half of the 6SL7 across resistor *R*.

Since the capacitor was charged up to bias voltage, it will cause the second half of the 6SL7 to be cut off, preventing any signal from getting through and also preventing the possibility of the 884 becoming ionized and thus deenergizing the main relay. However, since this bias is due solely to the charge on the capacitor, it decays exponentially due to the discharge of the capacitor through *R*, the time constant of which will be determined by the size of *C* and *R*. This time constant may be varied to suit any type of operation.

Capacitor C_1 is charged in the same manner by the bias voltage through the relay contacts of relay *A* and applied to *R* when relay *A* is deenergized; so it will not be turned on again by the same sound impulse. Although a negative 25 volts is sufficient to cut off the 884 when using 115 volts alternating current on the plate, approximately minus 50 volts was used in this circuit to prevent the possibility of any oscillation that may occur in the 6SL7 from firing the 884.

Carl J. Quirk, Voice-operated Electronic Relay, *Electronics*, June, 1945, p. 236.

Electronic Attenuator for Radio-receiver Alignment

During alignment of radio receivers, it is necessary to use a strong input signal initially to obtain any indication on the output meter. As the circuits are brought into resonance, the input signal voltage must be diminished to prevent overload or off-scale readings on the output meter. With the circuit shown, this is accomplished automatically by making three connections, one to the signal source, one to the antenna terminal of the receiver, and one to the voice coil or other output terminal of the receiver.

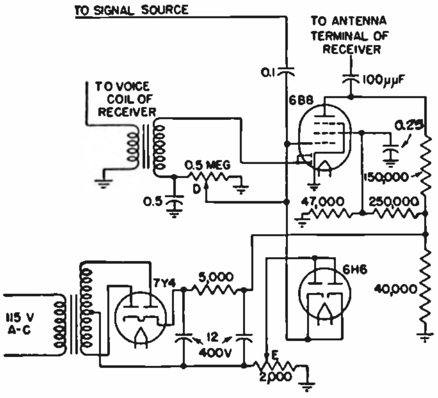

As the circuits are brought into resonance by adjustment of the trimmers in the receiver, the signal is rectified by the diode section of the 6B8 tube, and this rectified voltage is applied to the same tube as its bias. This controls the amplification of the tube and limits the amount of signal reaching the antenna of the receiver. The amount of bias may be controlled by an initial adjustment of voltage divider *D*.

In order not to have too much compression of signal in the r-f section of the 6B8, which would result in sluggish action of the output meter, a 6H6 tube is shunted across the grid of the 6B8. The response of this tube is controlled by voltage divider *E*. When the bias reaches a value predetermined by the setting of *D*, any further increase is shunted through the 6H6 tube. By setting up the two voltage dividers on an average set, an automatic attenuation of 10,000 to 1 is possible without any danger of overload or off-scale readings of the output meter.

Fred A. Schaner, Electronic Attenuator, *Electronics*, April, 1941, p. 68.

One-tube Overvoltage and Undervoltage Relay

A useful and simple relay for the protection of a-c equipment from dangerously high voltage may be assembled by making use of the type 885 grid-controlled rectifier with some accessory equipment. A small G-M type D relay with a 110-volt coil is used. The coil is energized by the output of the 885 tube as shown. A large capacitance across the relay coil is necessary because of operation with pulsating direct current from the tube. When the switch is closed, the output of the tube passes through the relay coil, thus holding the armature in contact and making the connection in the circuit that is being controlled.

To operate the device as an overvoltage relay, the a-c line is connected across a small 400-ohm rheostat in series with a 40-watt Mazda lamp. The secondary terminals of the grid transformer are connected across the terminals of the lamp. In using the tungsten-filament lamp in this way, use is made of the rising temperature-resistance characteristic of the lamp. The operating point is set by means of the rheostat to a predetermined tripping point somewhat higher than the normal line voltage. If the voltage of the line rises to this point, the grid voltage will rise to the cutoff point of the tube and plate current will stop, releasing the relay.

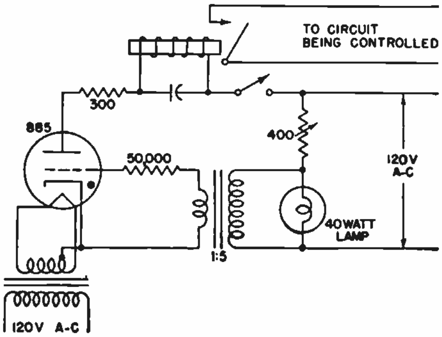

It is also possible to protect against low voltage. To do this, the switch should be replaced with a relay adjusted to open when the voltage falls to some predetermined value lower than the normal line voltage.

G. G. Kretschmar, An Electronic Overvoltage Relay, *Electronics*, February, 1941, p. 48.

Carrier-actuated Protective Circuit for Arc Suppression at Broadcast Transmitter

This carrier-protective circuit for low-level broadcast transmitter systems is controlled by carrier energy picked up by a short antenna and fed to the diode section of the 117L7. The diode develops positive bias for the tetrode section of the tube, which is also cathode-biased.

When normal energy is radiated, two relays RY_1 and RY_2 are energized by the tetrode plate current by virtue of positive grid bias from the diode, and RY_3 is also energized. Under this condition, the coil of RY_1 is paralleled by R_3, and only a slight drop in plate current will cause RY_1 to open. An abnormal condition anywhere in the transmitter resulting in a moderate drop in radiated energy will cause such a drop in plate current, and RY_1 will release RY_3, applying high negative bias to the buffer and modulated amplifier stages.

RY_3 may have any contact arrangement desired for the application of this bias, which must be determined to suit the individual transmitter. This bias should be sufficient to reduce the carrier power to about 15 per cent of normal, which will not sustain arcs unless there has been some damage to equipment. When the power drops to this low value, RY_2 will not have sufficient current to hold, and it will drop out, picking up RY_3 through a set of deenergized contacts, removing the high bias, and returning the carrier to normal. These deenergized contacts on RY_2 also perform the useful function of protecting the device against tube failure, since the relay cannot pick up without plate current, and these contacts hold in RY_3.

When RY_2 opens, two other functions occur: R_3 is removed from its position in parallel with the coil of RY_1, and RY_2 is locked out through its remaining deenergized contact and a similar one on RY_1. Thus RY_1 is subjected to the full plate current and will now pick up on a smaller current than is present when it opens, and

RY_2 is prevented from picking up until after RY_1 has closed. RY_1 closes at about 25 per cent of normal power, and RY_2 at about 80 per cent when the tube plate current is large enough to keep RY_1 energized as the paralleling resistor R_3 is reconnected. The instrument is now recycled. If damage has occurred to the transmitter or other trouble is present to prevent the carrier from returning to full power, the device will remain static, with RY_2 open, RY_1 open or closed, and transmitter bias normal (RY_3 closed).

The contacts of RY_1 should make before break, and the springs should have about half the tension of those on RY_2. C_4 is provided to avoid relay chatter on the rectified alternating current in the plate circuit of the 117L7. A switch *SW* is provided in parallel with the energized contacts of RY_1 in order to hold in RY_3 when adjusting the device or taking it out of service for some other reason. C_1 must be used to isolate the antenna from the power system, so that in the event the power source becomes reversed, the antenna will not be at line potential. C_1 also provides a convenient means of limiting the r-f input to the instrument. Enough r-f energy, however, should be fed to L_1C_2 so that this tank may be operated somewhat detuned from the station frequency and C_2 used as a control of the tetrode bias and the drop-out point of RY_1. When properly adjusted for drop out at 75 per cent of full carrier, the plate current should be about 22 ma, and it should be about 7 ma when the high bias is applied to the transmitter during an overload.

For use with high-level systems, where power reduction by means of high bias is more difficult to achieve, the contacts of RY_3 would be placed in series with the plate Off button or in series with the series-overload circuit of the transmitter, both generally arranged as normally closed circuits. Operation of the device would then result in an interruption of the plate-contactor holding circuit, shutting off the high voltage. A carrier-restoring device will be necessary for this method of operation, unless manual restoring of the carrier is to be depended upon.

The operation indicator at the right is a desirable accessory to the carrier protective device. Under normal conditions (RY_1, RY_2, and RY_3 closed), RY_4 is energized by the pushbutton, seals itself in through RY_1, and lights the pilot lamp. When RY_1 is opened, RY_4 will drop out and put out the pilot light, which will remain out until the operator resets it with the pushbutton. The protective device will continue to operate when called upon to do so, regardless of conditions in the indicator.

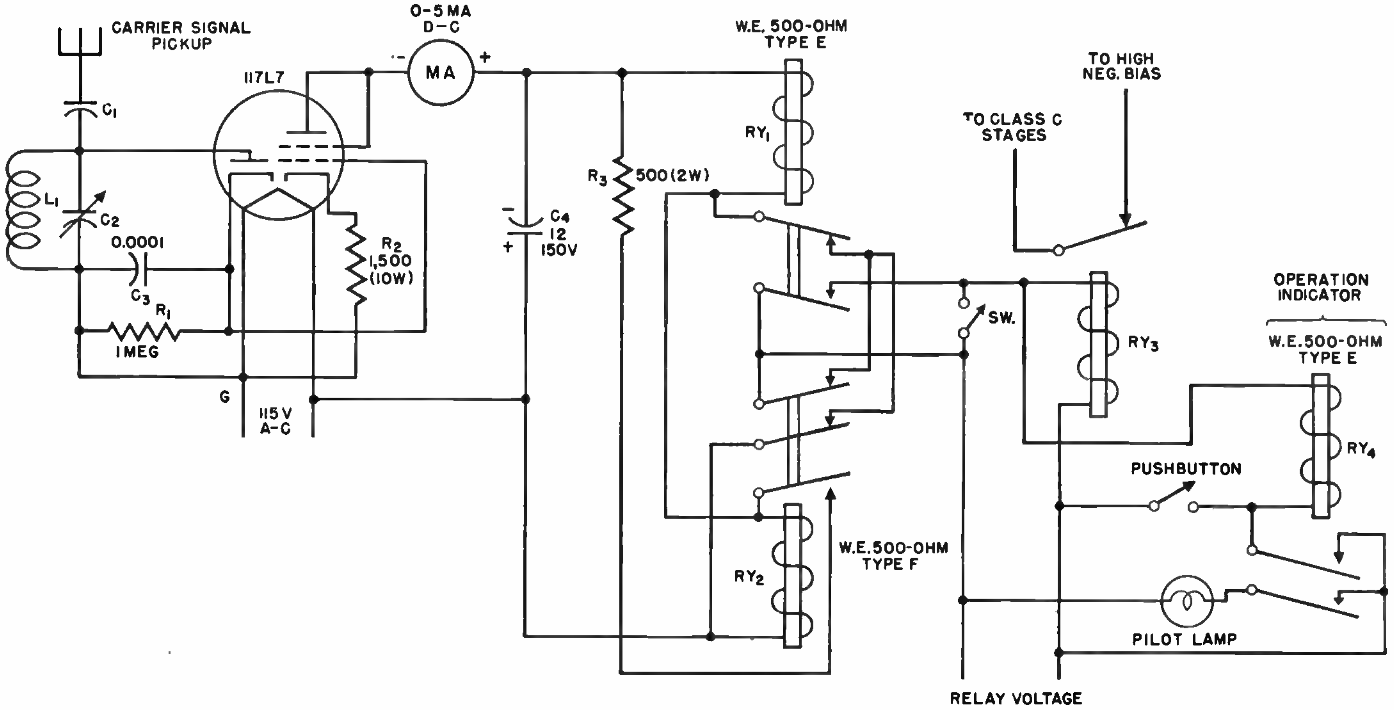

W. R. Sloat, Automatic Control Circuits for Broadcast Transmitters, *Electronics*, November, 1943, p. 102.

Automatic Time-delay Starting Circuit for Getting Transmitter Back on Air

An automatic time-delay starting circuit is particularly useful for getting a transmitter back on the air after a breakdown with a minimum of lost time and for locating trouble when the fault cannot be expeditiously located without the power on and when it is impossible to keep it on without damaging equipment. The circuit shown will give a start in 10 seconds, provided that the interlocking grid and filament relays are all clear; otherwise the start will wait until they do clear. This 10 seconds can be utilized by the operator in getting the studio on the order wire, or in proceeding to the point where trouble is suspected, so that he may observe the equipment at the moment the plate voltage is applied. For example, the operator is enabled to locate readily a bad tube in a parallel installation when the only indication of trouble is a flash inside the tube.

If either plate voltage is off, RY_1 will be deenergized and its contact closed. The relay is energized by current flowing through auxiliary contacts on the plate-voltage primary contactors. RY_2 may now be picked up by means of the pushbutton, and it will seal itself in through its lower contacts. The pilot lamp will go on and remain on until the starting action is completed. The upper contacts of RY_2 then excite the filament transformer of the rectifier tube and apply alternating voltage to the plates of the tubes. When the cathode has reached conduction temperature, RY_3 will be energized, closing its contacts across the plate On buttons. As soon as the plate contactors close, RY_1 will operate, opening its contacts and releasing RY_2. Thus the transmitter has been given one starting impulse. Subsequent starts will not require a full 10 seconds if the tube has not fully cooled. Obviously, RY_2 cannot be picked up when the plates are on or the master control is off, eliminating the possibility of accident through a stored-up start.

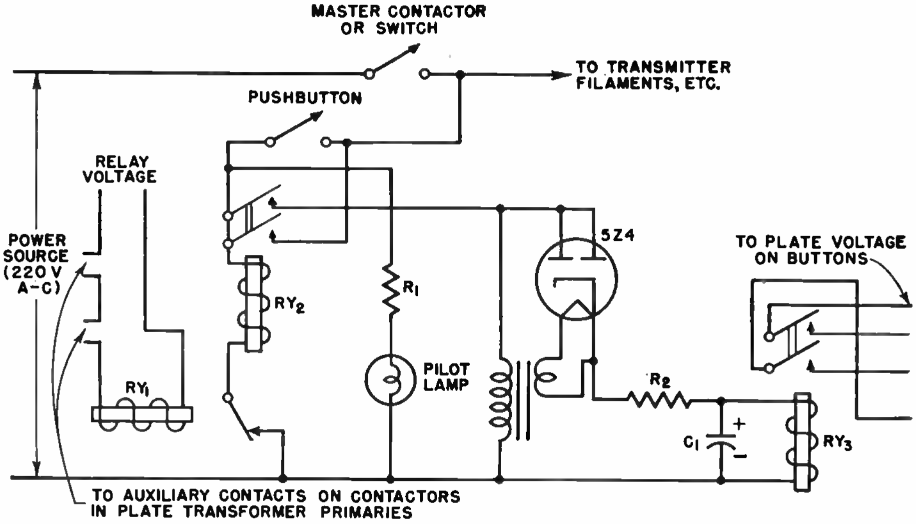

Resistors R_1 and R_2 are for dropping the pilot lamp and RY_3 voltages to the proper values from a 220-volt relay circuit. C_1 is shown across the RY_3 coil for removing the chatter if RY_3 is a d-c relay. It will not be necessary if an a-c relay is used.

W. R. Sloat, Automatic Control Circuits for Broadcast Transmitters, *Electronics*, November, 1943, p. 102.

Conductivity Control Circuit for Maintaining Water Level in Still

CURRENT flowing through distilled water between two electrodes is sufficient here to operate the electronic relay circuit even though the resistance between the electrodes may be as high as 60 megohms. The circuit controls an electromagnetic valve in the feed line of one of the glass boiling flasks, and also controls a switch through which power is applied to the boiling-flask heaters.

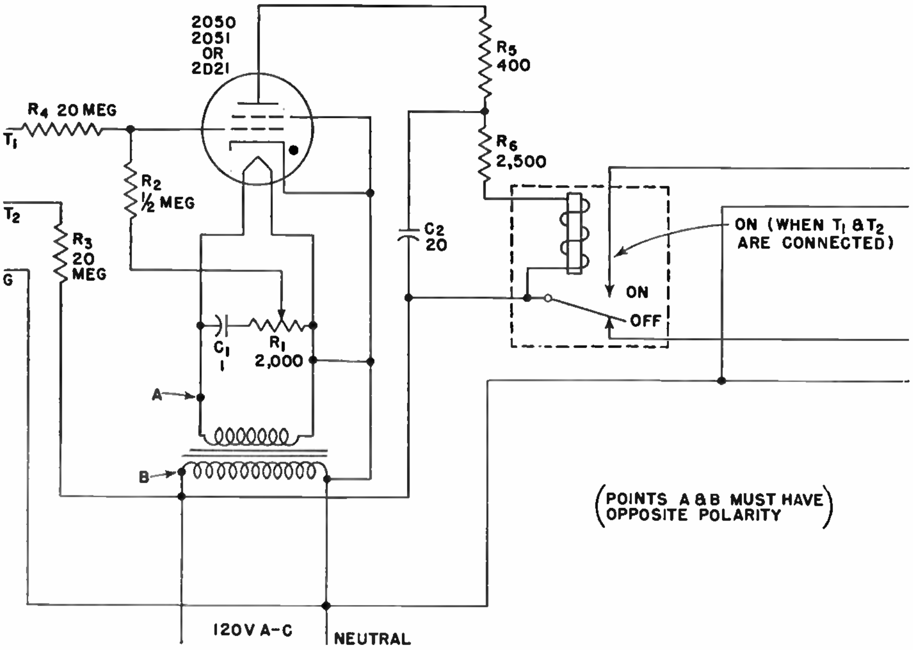

When the circuit between T_1 and T_2 is open, the gas tetrode is maintained nonconducting during the positive swing of the plate by applying to the grid through R_2 the negative swing from the filament-supply winding of the transformer. The phase is advanced slightly by the capacitance coupling to potentiometer R_1 in order to compensate for the lag introduced by the transformer.

Tripping of the unit is accomplished by imposing on the grid a sufficiently large voltage in phase with the a-c line (or plate) voltage. This occurs when T_1 and T_2 are connected together. The resistance of this connection (single-distilled water conductivity) may be as high as 60 megohms. Protective resistors R_3 and R_4 may be increased up to twice the values indicated. The optimum value is determined by the current requirements of the control cell connected between T_1 and T_2 and by its maximum resistance. In any event, the sensitivity is influenced by the potentiometer setting.

When adjusting the unit, if the gas tetrode fails to conduct with the potentiometer set for maximum bias and T_1 and T_2 connected together through the control cell having its electrodes immersed in single-distilled water, the bias is reduced until conduction does take place. In the event that the tetrode conducts with the control circuit open and with the potentiometer set for maximum bias, the value of C_1 is increased. A shield for the lead connecting the grid and the control cell has been found necessary in applications where considerable sensitivity is required.

Limiting resistor R_5 is selected to limit the surge current to the rated value. The two resistors R_5 and R_6 limit the average current to that required for reliable operation of the plate-circuit relay. Capacitor C_2 must be of sufficient capacitance to smooth the relay current for noiseless operation.

In addition to its use in the still system, the electronic relay described has been found ideal for use with sensitive thermoregulators whose precision depends upon the maintenance of clean contactors. The exceedingly small currents drawn by the unit permit operation for long periods of time with mercury thermoregulators.

R. E. Shrader and E. J. Wood, Automatic Control of Stills, *Electronics*, September, 1944, p. 98.

Photoelectric Control of Mercury-vapor Lamp for Constant Illumination

THIS control circuit for photographic printing uses a photoelectrically controlled mercury-vapor printing lamp in series with a resistance that is adjusted to absorb the difference between the line voltage and the voltage needed by the lamp. Two 6L6 tubes are connected across the lamp so that the plate-to-cathode current of these tubes is in parallel with the lamp. Plate current is adjusted to approximately 75 ma, halfway between zero and the maximum allowable current. The grid voltages are then varied so as to render the tubes capable of changing the current through the lamp over the range of 0 to 150 ma. The control grids are operated by the amplified voltages from a phototube that derives its light from the optical path between the lamp and the film.

The voltage generated by the phototube across a resistor R_1 controls the bias on the control grid of amplifier V_1. If no current flows in the phototube, the bias of V_1 becomes zero. This allows the tube to draw current through its plate resistor, and the plate assumes a low potential with respect to its cathode. The plate of this tube is connected through a battery to the control grids of V_2 and V_3 in such a way that the grids of these tubes are always this amount negative with respect to the plate of V_1. Therefore, whenever the plate of V_1 assumes a potential less than 22½ volts above its cathode, the grids of V_2 and V_3 become negative with respect to their cathodes and the plate current is varied.

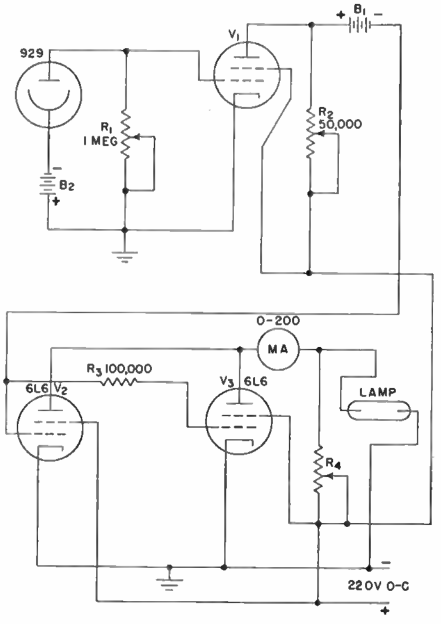

A very small change of phototube current is capable of completely controlling the plate currents of the last two tubes, which in turn control within very close limits the exposure provided by the mercury-arc lamp. The circuit is arranged so that an increase of light on the phototube will reduce the current through the lamp and correspondingly reduce the exposure of the film. Inasmuch as the operation of the control circuit is practically instantaneous, any fluctuations in the arc lamp or changes in supply voltage that might vary the exposure are suppressed. This type of control circuit operates very satisfactorily with low-voltage mercury-arc lamps of 100- and 250-watt size and permits the use of mercury lights from a 220-volt d-c supply.

John K. Hilliard, Electronic Control for Constant Illumination, *Electronics*, May, 1944, p. 180.

Dual-function Breakdown Alarm Circuit for Broadcast Transmitters

THIS alarm circuit gives warning of interruption of program service. A bell rings instantly on failure of the carrier, and the same bell also rings, after an appropriate delay of 15 or 20 seconds, if there is any interruption in the audio level from the studio.

The grid of the input stage is fed with a small amount of radio frequency from some convenient place, or a short antenna can be used. The output circuit is tuned to the operating frequency and coupled to the first half of the 6H6 rectifier. The voltage so developed across the diode load resistor is applied, with minimum time delay, to the grid of the 6J7 control tube. The relay closes instantly when this tube loses its bias.

The audio component from the same source is amplified by the 6C5 and rectified by the second half of the 6H6, thus providing the cutoff bias for the 6K7 tubes. The two tubes in parallel give more reliable operation than one tube used alone.

A good tubular paper capacitor should be chosen for the delay network. Larger paper capacitors of the block type give erratic operation due to leakage. The network arrangement results in high bias voltage from the 6H6. The capacitor charges in a second or two, which is desirable from the standpoint of uniformity of time constant with varying program conditions.

On failure of modulation, the time that elapses before the bell rings is determined

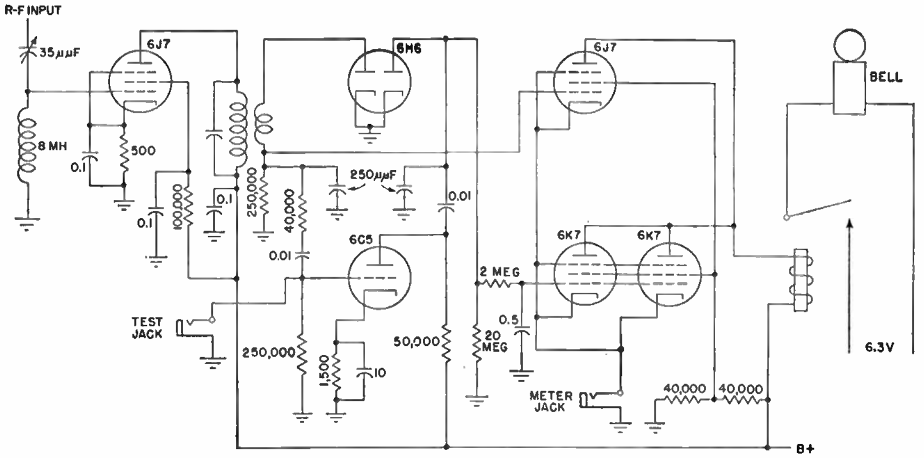

by the r-f input, the voltages on the control tubes, and the setting of the relay, as well as by the constants of the resistance-capacitance network on the grids of the 6K7 tubes. The metering jack for watching the performance of the control tubes when adjusting the unit is almost indispensable.

The d-c relay should be adjusted to close at 4 or 5 ma and to release at 1.5 ma or better. (A less sensitive relay can sometimes be used by bleeding some additional current through it with a resistor.) This relay is in the plate circuits of the 6J7 and the two 6K7 control tubes, which are normally biased to cutoff.

W. K. Angus, Transmitter Breakdown Alarm, *Electronics*, February, 1944, p. 158.

Carrier-tone Alarm Circuit for Response to Weak 1,000-cycle Modulation of Transmitter

This circuit, developed during the war for reception of the 1,000-cycle tone-modulated carrier of a key broadcast station, responds to less than 1 per cent modulation by a 1,000-cycle tone held for a period of 15 seconds; yet it is relatively insensitive to music.

The circuit contains a 6J5, with zero bias, that holds a relay down. The grid of this tube is connected to a 7½-volt negative bias that is balanced out by an opposing voltage developed across the cathode resistor of a 6Q7. This latter tube also has zero bias and passes plate current to develop the above bucking voltage. There are 3 volts of negative bias in its grid circuit, which is balanced out by the rectified carrier from a 6H6 tube.

When a 1,000-cycle tone comes down from the receiver audio output, it is rectified by a 6Q7 diode plate to provide voltage to make the 6Q7 grid negative. The 1-megohm resistor and 8-μf paper capacitor provide time delay. If the 6Q7 grid goes negative, the bucking voltage across its cathode resistor is removed, the 6J5 grid goes negative, and the relay opens, closing the bell circuit. The bell rings until the toggle switch is thrown, killing the bell and connecting the loudspeaker.

The limiter compresses the incoming program about 25 to 30 db. It allows a 2½-db rise in output above compression starting point. The limiter rectifier uses a 6R7 with automatic bias control on its diode plates. The diodes are biased by a 45-volt battery plus about 18 volts drop across the 100,000-ohm cathode resistor.

In the usual rectifier, the rectified voltage acts as a negative bias on the rectifier plate, increasing as the signal increases. In this rectifier, for all practical purposes the rectifier bias does not increase with increasing signal.

With no rectification, the 6R7 grid is biased very near cutoff (18 volts), and only about 0.18 ma plate current is flowing. With rectification, the rectified voltage is added to the grid bias, and the small plate current is reduced enough to hold the total bias near 18 volts so that it will not be cut off. The added 45-volt battery bias places the controlled receiver output at the proper level and improves the compression ratio.

A W-E relay was adjusted to close on 12 ma and to open on 10 ma. Its current normally is about 13 ma when set for operation. About 5 ma of this is a steady bleeder current going to ground through a resistor. The 6J5 supplies the remainder.

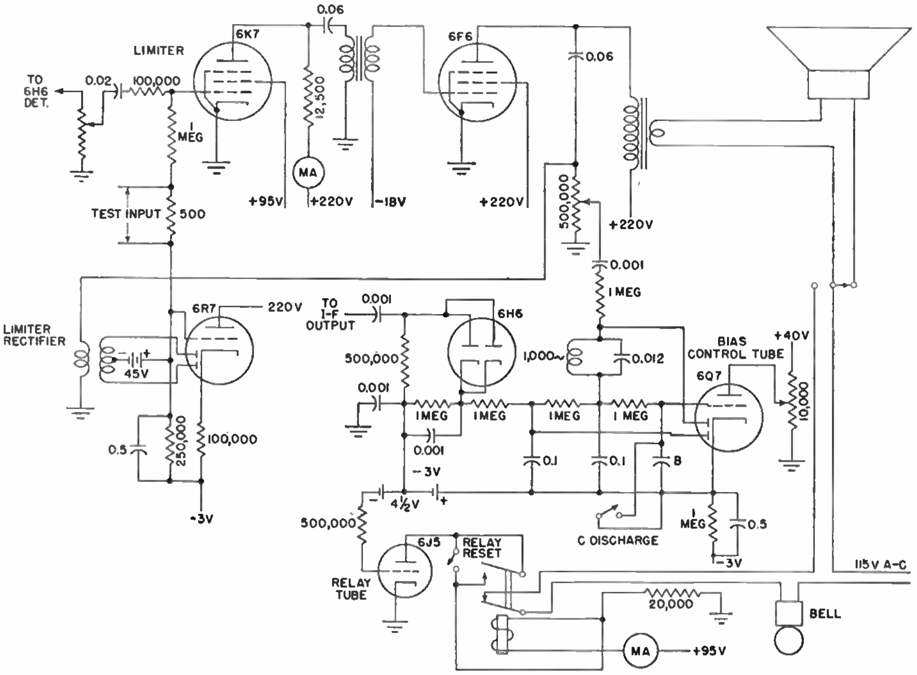

To adjust the receiver, tune in the key station, and turn the volume off. Press *C* discharge button, and relay reset button. Feed a low-level 1,000-cycle signal into test input, increasing until input is 1 db above start of compression, which is indicated by a drop in 6K7 plate current. Hold this level, and adjust the potentiometer across the receiver output until the relay trips in 15 seconds. Discharge the 8-μf capacitor with its shorting push-button each time before adjusting for 15 seconds. After adjustment, the volume can be turned about full on.

After the 15-second adjustment is made, increasing the 1,000-cycle level 20 db trips the relay in about 12 seconds. If the key station program is allowed to come through for a few minutes before the 12-second test, and the capacitor is not discharged before testing, the time is about 10 seconds.

The program level can rise 35 to 45 db above the 1,000-cycle tone level used for the 15-second adjustment before the relay trips. If 42 db is taken as 100 per cent modulation, then the 1,000-cycle tone level corresponds to only ¾ per cent modulation.

In daily operation, programs trip the relay an average of once every 2 days. The 1,000-cycle tuned circuit is 4 db down from 1,000 at 800 and 1,200 cycles.

L. H. Appleman, Sensitive Carrier-tone Alarm, *Electronics*, February, 1944, p. 154.

Thyratron Relay Circuit for Preventing Electrolytic Action on Underground Pipes

By connecting this electronic thyratron tube relay in series with a tie wire joining the rails of an electric railway with the pipes of a gas or water main, it is possible to prevent damage to the pipes by stray currents from the near-by electrified railway line.

Grid bias is adjusted by setting the arm of the 5,000-ohm potentiometer and the tie-wire tap so that when the rails are positive with respect to the main this external voltage bucks d-c bias supplied by the Rectox unit, making the grid of the FG-17 more positive with respect to its cathode and causing the tube to fire. Anode circuit relay *R* closes, simultaneously closing contactor *C* and permitting current to flow through the contacts of *C* from main to rails. Reversal of external voltage polarity produces an increase in negative grid bias, causes the tube to cease conducting, and opens relay *R*, contactor *C*, and the tie-wire circuit.

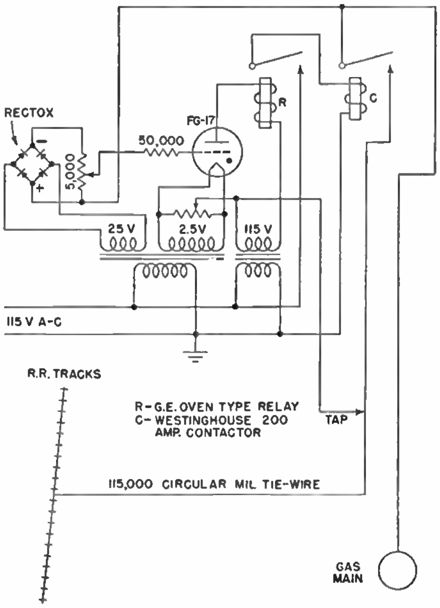

Up to 200 amperes may flow from main to rails through the contactors of *C*, but the contacts need not break currents of this order. Proper adjustment of the relay's trigger point causes it to function when the voltage differential between rails and main is nearing zero.

C. R. Davis and R. M. Wainwright, An Anti-electrolysis Relay, *Electronics*, March, 1942, p. 72.

Varistor-compensated Double-triode Stage for Measuring Vertical Velocity of Aircraft

A VARISTOR-COMPENSATED circuit here converts nonlinear voltage variables into linear voltage variables, for use in such applications as showing rate of climb directly in radio altimeters. The circuit, a novel combination of a varistor-compensating network and a balanced double-triode stage, was developed for use with a radio altimeter to give true vertical-velocity indications by first straightening the nonlinear altimeter output characteristic and then differentiating with respect to time in an orthodox manner. The basic circuit principles, however, have application wherever it is necessary to measure the rate of change of a function represented by a nonlinear voltage. A similar circuit, for example, could be used to measure the angular velocity of the brush of a nonlinear potentiometer.

The nonlinear altimeter output voltage across R_1 is impressed across a network consisting of varistor X_1, a parallel resistor R_9, and a series resistor R_2. The most essential component of this network is varistor X_1. By virtue of its variable resistance characteristics, this component controls the current flow in the network so that the resulting voltage across R_2 is essentially proportional to altitude.

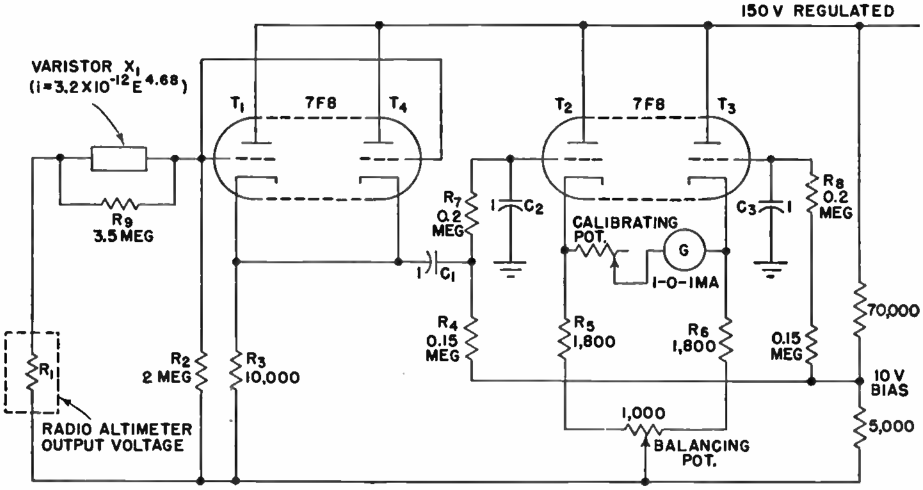

To minimize loading effects upon the altimeter voltage source, the voltage proportional to altitude is first reproduced across cathode resistor R_3 of cathode follower T_1T_4. The actual differentiation process is then performed by the resistor-capacitor network C_1R_4.

The usable voltage after differentiation appears across grid resistor R_4. The polarity of this voltage depends upon the direction of the rate of change of altitude (climb or dive) and the magnitude is a measure of the vertical velocity of the aircraft.

The grid of T_3 of the balanced double-triode T_2T_3 is maintained at a constant potential. Thus the voltage across cathode resistor R_6 is simply a zero reference voltage. A balancing potentiometer is included. When the aircraft rate of change of altitude is zero, the voltage across R_5 of T_2 is equal to the voltage across R_6 of T_3 and there is no deflection of the meter needle. However, when the aircraft changes altitude, a change of voltage across R_5 of T_2 causes the meter needle to deflect its zero center position. In this particular application the meter was calibrated to read directly in feet per minute.

The main advantage of this type of vertical-velocity indicating device over conventional barometric rate-of-climb meters is that there are no large time lags present. In fact, in test flights it was found desirable to introduce a small time lag into the circuit to dampen the meter needle. The capacitor-resistor networks C_2R_7 and C_3R_8, each with a time constant of 0.2 second, were added for this purpose.

The basic problem in the design of such a circuit is to select a varistor-resistor network that most nearly compensates for the nonlinear voltage curve to be straightened. In the vertical-velocity meter, a compensating circuit for a nonlinear voltage curve of decreasing voltage gradient was required. However, by interchanging components X_1 and R_2 and by making use of the voltage across X_1, the basic circuit for the compensation of a nonlinear voltage curve of increasing voltage gradient can be obtained. Since the effective characteristic of any given varistor can be changed by shunting the varistor with a parallel resistance R_9, it is conceivable that some combination of varistors and resistors can be devised to straighten almost any type of nonlinear voltage gradient, provided that the curvature does not change too rapidly.

R. W. Treharne, J. A. Kammerer and R. Hofstadter, Rate-of-change Meter, *Electronics*, May, 1947, p. 106.

Industrial Control Circuit Using Vane-responsive R-F Oscillator

This vane-operated control unit can serve as an on-off, two-position, or three-position controller. One section of the double-triode tube works as a constant-grid-potential oscillator that changes its plate current suddenly as a vane moves between the coils, giving snap action of the output relay for industrial control applications involving float, feeler gage, or other sensing elements moving as little as 0.002 inch.

The oscillator, which operates at 30 mc, is composed of a fixed tuned-plate circuit with a tickler coil in the first tube section cathode circuit which provides not only voltage feedback but also degeneration due to the impedance drop occurring for current flow.

The second parallel tube section has its grid connected to the oscillator grid so that the average current thereof is also controlled in accordance with the vane position, although this section does not oscillate. The use of this second parallel triode results in about 60 per cent more current being available for relay operation, thereby providing greater power output and permitting use of a lower resistance relay coil with consequently larger wire size.

Capacitor C_3 is an r-f bypass shunting the d-c load and plate-supply source. C_4, acting in parallel with the plate-to-grid and plate-to-ground stray capacitances, forms the capacitance of the oscillator-plate tank circuit, the effective value of which is of the order of 10 μμf for 30 mc.

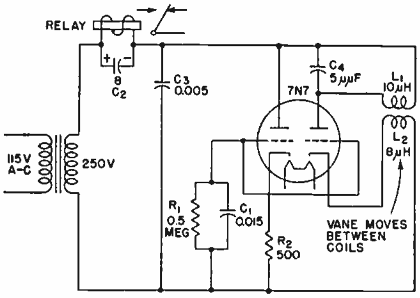

Capacitor C_1 affords an r-f grounding means for the grid. It also permits the average grid potential to become highly negative during the oscillation mode when the cathode fluctuates in its potential, causing the grid circuit to draw current. The combination of C_1 and R_1 introduces some time delay for relay closure to occur, and is selected as required to prevent relay chatter under cases of vibration often encountered in industrial applications. This portion of the circuit may be easily altered to produce other values of time delay. For reasons of safety the cathode-bias resistor R_2 is chosen to limit permissible current of the nonoscillating triode section and is held to somewhat closer tolerances (5 per cent) than is the grid resistor or other components (20 per cent). If the emission of the oscillator section falls below a fixed minimum, or its continuity is broken, sufficient current cannot flow to hold the relay closed. Moreover, the use of safety bias resistor R_2 and the operation of the oscillator as a series-fed type ensure that the relay cannot be energized should any coil, transformer winding, or coil lead become open-circuited.

Inductance coils L_1 and L_2 are conventional pancake coils, with the number of turns chosen to provide satisfactory oscillator characteristics and to allow the relatively large dimensional spacing of 0.150 inch between coils. Such a space factor permits the coils to be impregnated directly within a form of plastic material having low water-absorption properties. Ample space through which the control vane can move is provided without close dimensional tolerances being imposed on the associated mechanical components.

W. H. Wannamaker, Jr., Vane-actuated Controller, *Electronics*, June, 1947, p. 117.

Pulsed Carrier-current System for Remote Selection of Phonograph Records

Rapid remote selection of records in a coin-operated phonograph system is provided by employing a carrier-current circuit in which a wall-box oscillator transmits r-f pulses over its supply line to discriminator circuits in the phonograph cabinet. Twelve carrier frequencies and the use of both alternations of the power line permit selection of 24 records.

The circuit requires considerably less than 1 volt of radio-frequency signal over its lines and solves the problem of inter-wall-box interference in the event selections are made simultaneously from two different points. By using only 24 volts to power each wall box, it also removes the necessity of enclosing the cable system in conduits. Each remote selector (wall-box unit) is built around a single 6SN7 tube. One triode of this tube is used in a Colpitts oscillator circuit to generate pulses, and the other triode is used as a loosely coupled isolation amplifier. This amplifier is coupled to the coaxial line by a small capacitance.

Twelve frequencies in the range from 149 to 289 kc are generated in 12 separate slug-tuned oscillator coils, making possible the selection of 24 records by using envelope phase selection in which only one phase of the 60-cycle plate voltage is applied to the oscillator amplifier. The proper phase is determined by the button pressed.

Each oscillator coil in the box is connected to a pair of pushbuttons. Since the receiver discriminator tubes at the phonograph are powered in the same manner and from the same a-c line, envelope phase selection in the transmitter allows the number of possible record selections to be twice the number of separate frequencies used. The frequency separation of adjacent frequencies is determined on a percentage basis, a factor of approximately 1.07 being used to determine each successively higher frequency.

Pushing button 1 will select oscillator

coil *L* and winding *B* of the high-voltage secondary of the wall-box step-up transformer. Pushing button 2 will select the same oscillator coil, but will select winding *A* of the power transformer.

When a pushbutton is pressed, a series of *A* and *B* phase pulses lasting from 0.1 to 0.25 second, depending on the time constant of the pushbutton and coin-operated relay, is transmitted over the cable. Pushbuttons are also so interlocked that if more than one is pushed simultaneously at the same wall box, only the numerically lowest button will select a record.

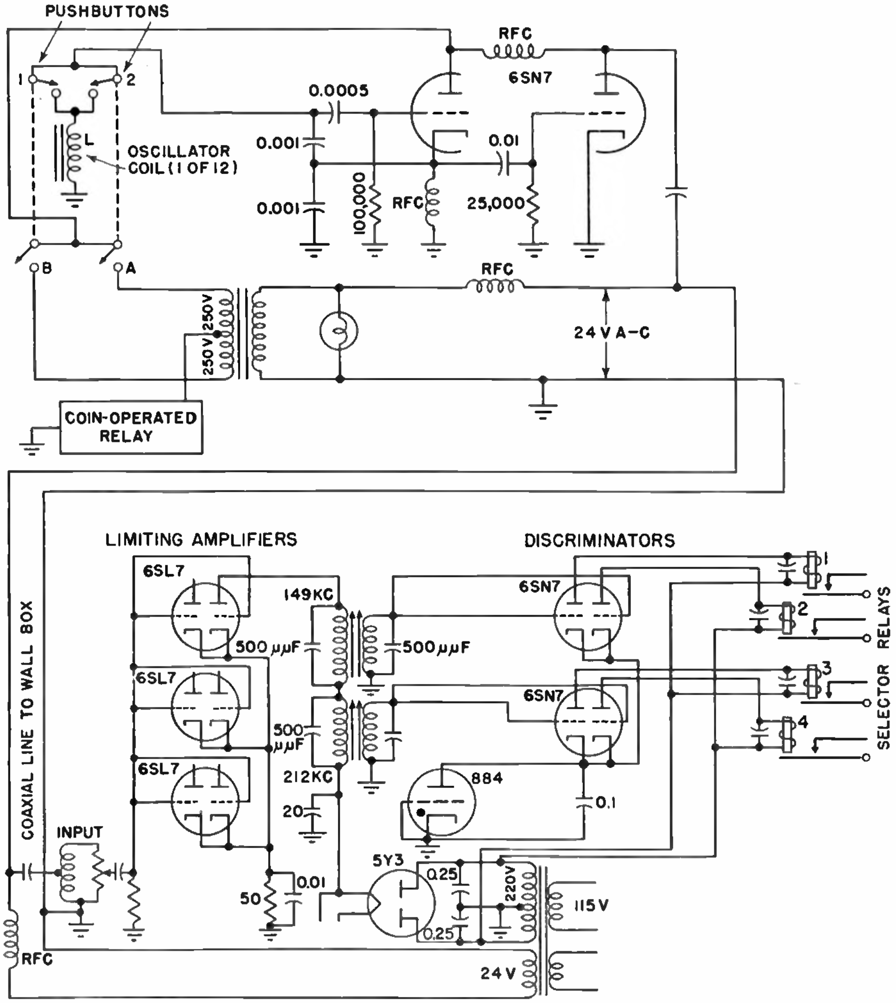

The receiver uses three 6SL7 tubes as amplifiers, twelve 6SN7 tubes as discriminators, a 5Y3 to supply 250 volts of direct current to the plates of the amplifiers, and an 884 that acts as a bias resistor for the discriminator tubes.

The r-f signals from the wall box pass through the input autotransformer to the grids of the 6SL7 dual-triode amplifier tubes. The 6SL7 tubes function as limiters because an r-f voltage to the grids in excess of the bias voltage permits the girds to draw current and allows charging of a grid capacitor. This swings the bias of the tubes toward cutoff and limits the amplification of the tube. Output voltage of the amplifier tubes is therefore held at a fairly constant level regardless of signal input level.

The six plates of the amplifier tube section are connected individually to the 12 r-f transformer primaries, two primaries being connected in series in each plate circuit. Plate supply to all amplifier tubes is furnished by the 5Y3 rectifier tube, direct current being applied to these tubes so that they will not discriminate against *A* and *B* phased pulses.

Each r-f transformer consists of two iron-core coils. The frequencies of the two transformers connected in series are purposely staggered so that no interference is experienced in the tuning of each. The output of each transformer feeds the two paralleled grids of a 6SN7 discriminator tube.

Each discriminator tube functions as a plate rectifier. An r-f voltage appearing on the grids of the tube causes plate current to increase, provided that the alternating plate voltage is positive at that time. The plate circuits of the 6SN7 tubes are connected through individual relays to the opposite ends of the 500-volt winding on the power transformer, the center tap being at ground potential. Each end of this winding is bypassed to ground for radio frequency.

An r-f signal from the wall box is admitted by all amplifier tubes but is eventually coupled into the grids of only one of the 6SN7 tubes. This action is obtained by the frequency discrimination of the filters, the 6SN7 tube being energized according to the frequency selected at the wall box. If r-f energy is supplied to the two grids of the discriminator tube and d-c potential is applied to the plates of this tube, the relays in both plate circuits would be energized. However, because the two plates of the discriminator tube are supplied from opposite sides of the power-transformer winding, at the instant that one plate is positive the other plate will be negative. If an r-f signal arrives at the time when the plate is negative, no current will be drawn by its corresponding relay.

Because the signal from the wall box is generated by an r-f oscillator with alternating plate voltage, the r-f energy consists of a series of pulses lasting for $1/120$ second each and spaced from each other by the same period. These pulses will be in time phase with the plate voltage supplied to one discriminator plate and will be out of phase with the voltage at the opposite plate. The polarity, or phase, of the alternating current is chosen in the wall box by the pushbutton switches, the odd-numbered buttons being of one phase and the even-numbered buttons being of the opposite phase. Thus the selection of the discriminator plate that draws current depends on the phase of the voltage at the wall box.

All discriminator-tube cathodes are connected to the plate of an 884 gas tube that acts as a cathode-bias resistor. The voltage drop across the 884 tube remains constant regardless of the amount of current flowing, and thus remains independent of the number of discriminator tubes drawing current at one time. The action of the 884 tube used in this manner is similar to the more commonly used voltage-regulator tubes. However, the 884 tube has a constant voltage drop of 14 volts, which is the correct bias for the discriminator tubes.

Fred M. Berry, Remote Record-selection System, *Electronics*, June, 1946, p. 104.

COUNTING CIRCUITS

Circuit for Counting Arc-overs in Metallized Capacitors

To test the self-healing property of metallized dielectrics and to determine the factors that enter into this phenomenon, this counting circuit was used. Through a relay it will operate a magnetic counter.

By means of this setup, the number of discharges through the metallized capacitor paper was recorded up to a maximum of 10 per second, which was the limit of the counter used.

A voltage was established across the metallized paper by means of the clamp. This was increased in 10- to 25-volt steps at 1-minute intervals, and the number of discharges during each interval was noted until a maximum of 350 to 400 volts was achieved. The voltage was then dropped to zero, and the foregoing procedure was repeated two or more times.

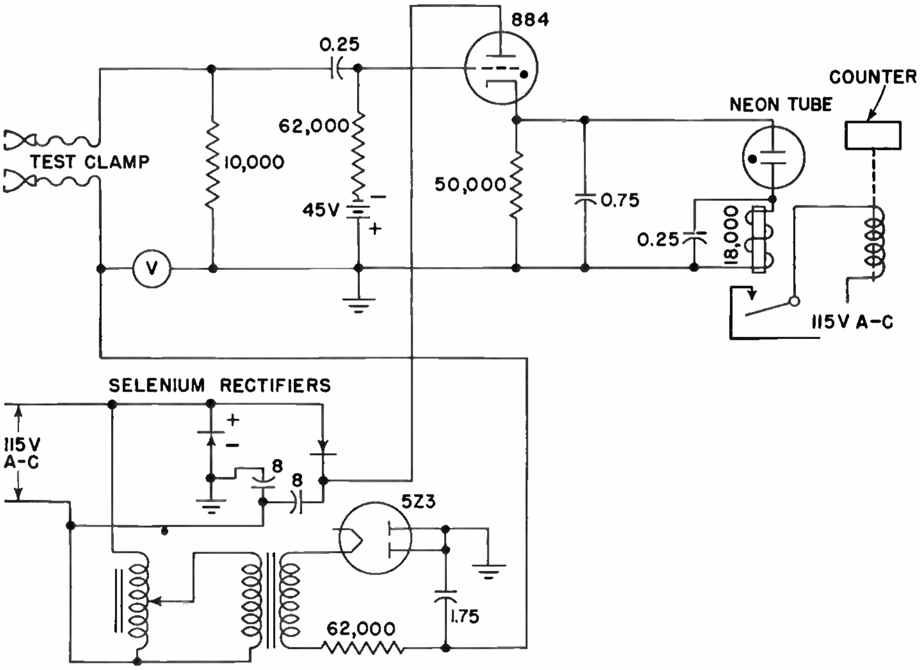

Philip Godley and Jayson C. Balsbaugh, Metallized Capacitor Tests, *Electronics*, April, 1947, p. 112.

Basic Eccles-Jordan Trigger Circuit for Use as Two-to-one Frequency Divider

In the basic Eccles-Jordan trigger circuit shown here, the two triodes T_1 and T_2 are so connected that the plate of each controls the grid of the other and only one tube can conduct (be on) at a time. The component values shown are merely illustrative, but will make a satisfactory trigger for relatively slow-speed operation.

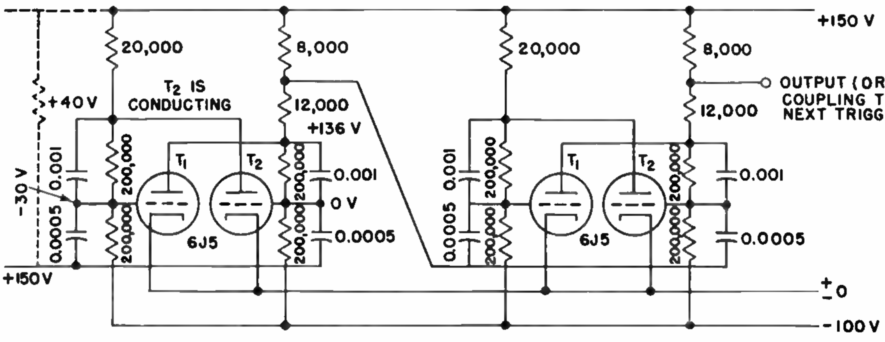

The tubes used are 6J5, or equivalent, and may be considered essentially as switches. When the tube is conducting, it is just like a closed switch except that there is a 40-volt drop between plate and cathode. When the grid is made negative with respect to its cathode by 8 volts or more, the tube is nonconducting and resembles an open switch in that no current can flow between plate and cathode.

With both tubes arbitrarily rendered nonconducting, the voltage at the grid of T_1 is determined by the resistor network shown between the +150-volt line and the −100-volt line. By Kirchhoff's law, the grid of T_1 may be calculated to be 19 volts positive with respect to its cathode, thus turning T_1 on. (Actually, sufficient grid current will normally flow in T_1 to hold its grid down to approximately cathode potential.)

When tube T_2 is made conducting, its plate will drop to +40 volts and point *A* will be held at that potential. Again applying Kirchhoff's law, we find that the grid of T_1 is now 30 volts negative with respect to its cathode, and T_1 is thus held nonconducting by T_2. Connecting the grid of T_2 to the plate of T_1 with a similar network will enable T_1 to control T_2 in the same manner, and we have the desired condition in which only one tube can be on at a time.

All that is required to use a trigger circuit of the type described as a frequency divider is to hold the input signal to reasonable limits (25 volts ±15 volts for a low-impedance source). No extra tubes or pulse selectors are required.

If a square-wave input is of a low enough frequency, the positive rise of the square wave will appear to the trigger grids as a positive impulse of a magnitude equal to the negative impulse produced by the negative shift of the square-wave signal. To act as a frequency divider, the trigger must respond only to the negative shift. This it will do if the impulse is kept within reasonable limits. For example, a 20-volt negative impulse will cut off the conducting tube, enabling the trigger to transfer; a 20-volt positive impulse will not bring the grid of the nonconducting tube up to the conducting point, and thus cannot make the tube start to conduct. Its only action on the conducting tube is to drive the grid slightly positive. Therefore the trigger will transfer only on a negative impulse or voltage shift, and the trigger will act as a frequency divider on a 20-volt square-wave input.

The trigger circuit as shown will respond to negative pulses only, so long as they remain between the limits of 10 to 40 volts.

To couple two triggers together, it is only necessary to tap one plate resistor of the first trigger at one-quarter to one-half its value, coupling to the input capacitors of the second trigger. Thus there is a simple straightforward trigger circuit that is capable of distinguishing between positive and negative pulses without additional tubes. Such triggers when properly designed are stable, dependable, and independent of any reasonable voltage-supply variation (±20 per cent variation in either bias or plate supply, more if both vary together).

As many triggers as desired may be coupled together by the methods outlined above to obtain any desired frequency reduction, the frequency being reduced by a factor of 2 for each trigger used. Such a frequency divider may be used in many ways, such as in combination with a mechanical counter for counting high-speed pulses far above the speed of the mechanical counter alone, or in high-speed calculating. A combination of a trigger and a power tube, where the trigger controls the power tube, may be used in place of a thyratron with the advantage that it may be turned off as easily as it is turned on. The triggers alone or in combination may also be used as electronic storage devices, since they are perfectly stable in either position.

Byron E. Phelps, Dual-triode Trigger Circuits, *Electronics*, July, 1945, p. 110.

Blocking Oscillator and Double Diode for Frequency Division

In the circuit arrangement shown, a 100-kc pulse input is divided by 5 and 2, respectively, as required for measuring pulse-time differences in loran receiver indicators. The 100-kc output from the crystal, having passed through a limiter amplifier, is fed to a 6H6 double diode so connected that it passes negative pulses to ground while passing positive pulse to a capacitor, and the voltage across it thereby increases in steps. When five such steps have been accumulated, the voltage across the capacitor has reached a sufficient level to trigger the following circuit, a 6SN7 blocking oscillator.

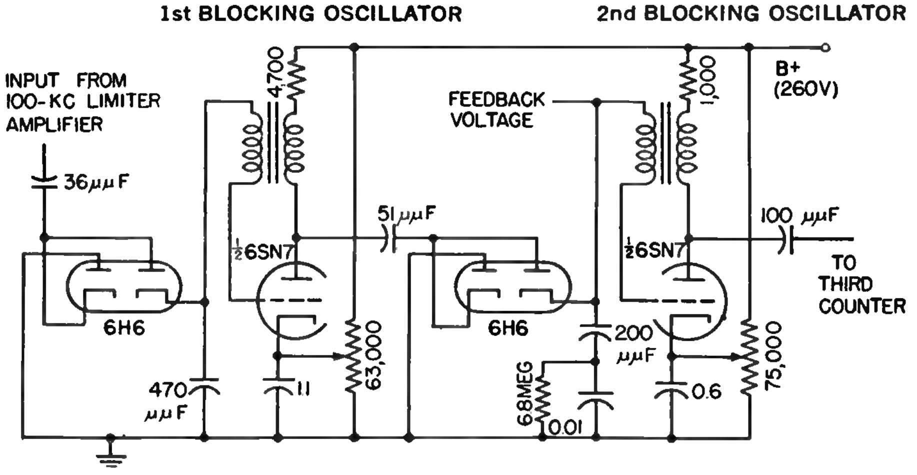

The blocking oscillator generates one pulse and discharges the capacitor in the process, which thereupon accumulates five more pulses from the 100-kc source and triggers off the blocking oscillator once more. Thus the blocking oscillator reacts once for each five input pulses and the frequency is divided by five.

The output of the blocking oscillator is applied to another double diode which, like the first, passes the positive pulses to a capacitor which charges to the level of two steps and thereupon triggers off a succeeding blocking oscillator (biased to respond to two steps).

Loran Receiver-indicator, *Electronics*, December, 1945, p. 110.

Energy-time Integration with Bridge-fed Eccles-Jordan Trigger Circuit

This counting circuit converts an amplitude-variable signal into a frequency-variable one. The circuit generates short pulses at a rate directly proportional to the amplitude of the input signal. There is a bridge circuit that has pentode tubes 12SJ7(1) and 12SJ7(2) as two of the arms.

Assume that with zero input voltage to tube 12SJ7(1) the bias voltages of these tubes are so adjusted that the potential of point *A* is equal to the potential of point *B*. An input voltage will upset the balance of the bridge by changing the plate-circuit resistance of 12SJ7(1), causing a change in the potential at point *A* and establishing a difference of potential across C_1. If the input voltage increases negatively, a positive potential will appear from *A* to *B*, charging capacitor C_1 through the plate circuit of 12SJ7(2). Since 12SJ7(2) is operated as a constant-current tube, the charging current will also be constant. The voltage across the capacitor increases linearly with time, and the rate at which it increases is proportional to the signal voltage at the input of 12SJ7(1), provided that it is not too large.

If a means is provided of suddenly discharging the capacitor when the voltage across it has reached a predetermined critical value, then the rate at which it is so discharged is directly proportional to the amplitude of the input signal over its range of operation. An Eccles-Jordan trigger circuit is connected across the capacitor and is so adjusted as to trip when the positive voltage between *A* and *B* has reached a value determined by the setting of the bias potentiometer. This value may be about 1 or 2 volts.

A fast-acting micro-relay in the plate circuit of the first section of the 12SC7 trigger tube short-circuits the capacitor, discharging it almost instantaneously. The discharging pulse causes the trigger circuit to reverse itself into its original position, and the capacitor begins to charge over again. At the break of the upper contact of the relay a 35L6G tube is momentarily brought into operation, causing an intensive short pulse of current to flow in its plate circuit. The current flows only during the action time of the relay, since it is biased to cutoff at all other times. These pulses are fed into the field coils of an electromagnetic lever that causes an ink-writing pen to make a lateral mark on a strip of moving paper. The integral of the energy-time function over any interval is obtained by merely counting the number of pulses marked on the paper during the interval.

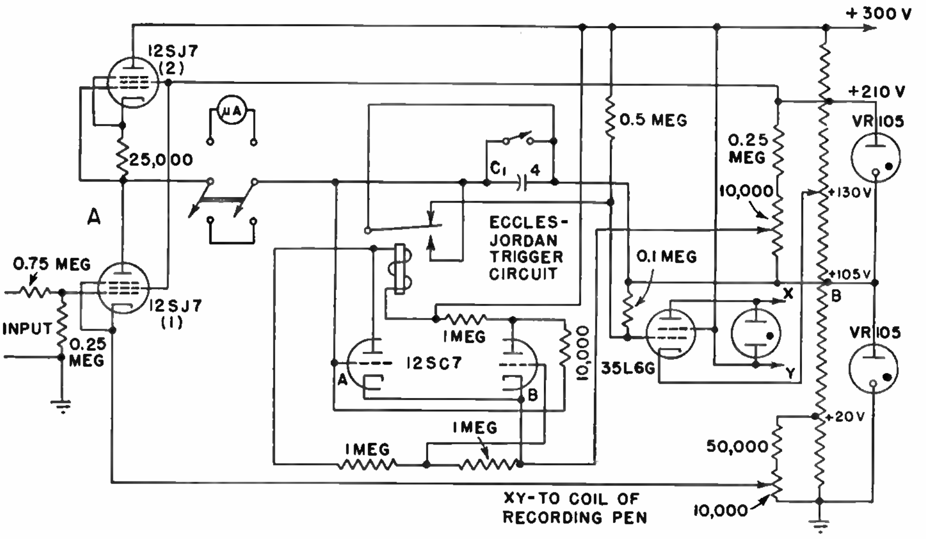

Charles Sheer and John G. Lynn, Electronics in the Study of Head Injuries, *Electronics*, January, 1944, p. 112.

Thyratron Frequency-dividing Circuit for Electromagnetic Counters

This circuit permits recording or counting the passage of 1,250 objects per second (over 4 million per hour). Units of two thyratrons in cascade reduce the rate of counting by a factor of 2 per unit, until the final counting rate is sufficiently slow for a mechanical meter. In each unit the steady bias potential applied to both grids by the grid-bias battery through the grid resistances is slightly more negative than the critical negative potential required to prevent arcs from striking.

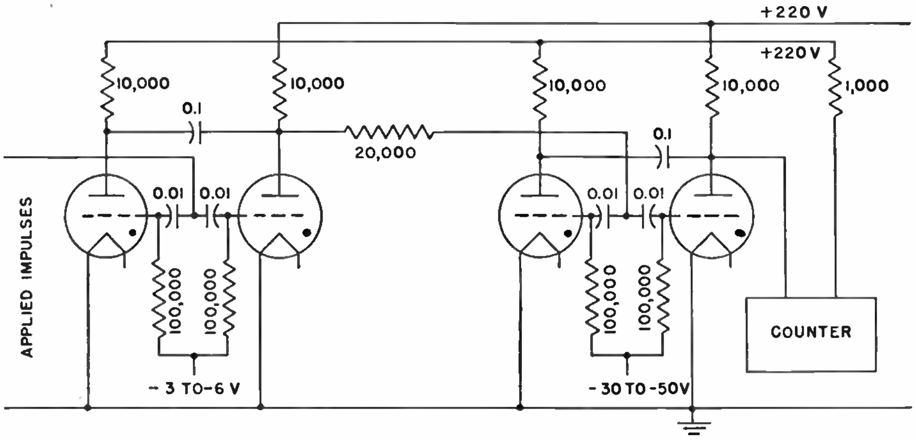

Suppose that by some means an arc has been started in one thyratron; the striking of the arc in the other thyratron consequent upon the arrival of an impulse at the grids results in a sudden drop of its anode potential. The resulting negative potential surge, transmitted through a capacitor to the anode of the other thyratron, causes that thyratron to be extinguished. Each thyratron responds to half the total number of applied impulses. Only one of the thyratrons in each stage is coupled to the preceding unit of two by connecting the input side of the grid capacitors to the anodes of one of the thyratrons through high resistances.

C. E. Wynn Williams, High Speed Thyratron Automatic Counting, *Proc. Roy. Soc.*, May, 1932, abstracted in *Electronics*, July, 1932, p. 232.

Four-tube Binary Counter Decade Giving Forced Resetting at Count of Ten

The counter decade shown can form the basic unit for every electronic counting application. With appropriate input circuit accessories and a suitable number of these decades (one for each digit in the maximum quantity to be counted), the special requirements of particular applications are readily met.

A minimum number of parts and tubes represent the numbers from 0 to 9. The binary progression 1-2-4-8 is used, being connected in such a manner that two pulses from one circuit cause one operation of the succeeding circuit. Interpretation is simplified by stopping the progression at the count of ten and resetting to zero. The counter decade comprises four stages, each employing an ordinary dual-triode vacuum tube (such as a 6SN7, 6N7, or 6J6) arranged in an Eccles-Jordan trigger circuit in conjunction with an indicating neon lamp. The basic functioning of all stages is alike, and is dependent upon shifting of operating potentials of each stage back and forth between the two sets of values, indicated on stages 1 and 2, respectively.

Considering stage 1, note first that a fixed potential of $+150$ volts (with respect to $B-$ and ground) is applied to the cathode of the tube at all times by the power pack. Grid and plate potentials are obtained from the resistance network included in the basic circuit, however, and depend upon relative currents through the two branches of the network $R_1R_3R_5$ and $R_2R_4R_6$.

Assume that the grid of the right-hand triode is essentially at cathode potential (zero bias), and assume that no signal pulses have arrived. At zero bias, the right-hand triode will conduct saturation plate current, and its plate-cathode voltage drop will be low (actually it is 20 volts, lower than the extinction voltage of the neon lamp connected across this section). For this assumed initial condition, then, the neon lamp in the stage is extinguished.

With the right-hand triode section conducting, it draws current through R_6 and greatly increases the voltage drop across R_6. This leaves less voltage for R_4 and R_2, and hence drives point *b* in a negative direction with respect to the cathode. A shift of 25 volts was found sufficient to drive a triode section to cutoff, and resistor values were accordingly chosen to give this distribution of voltages.

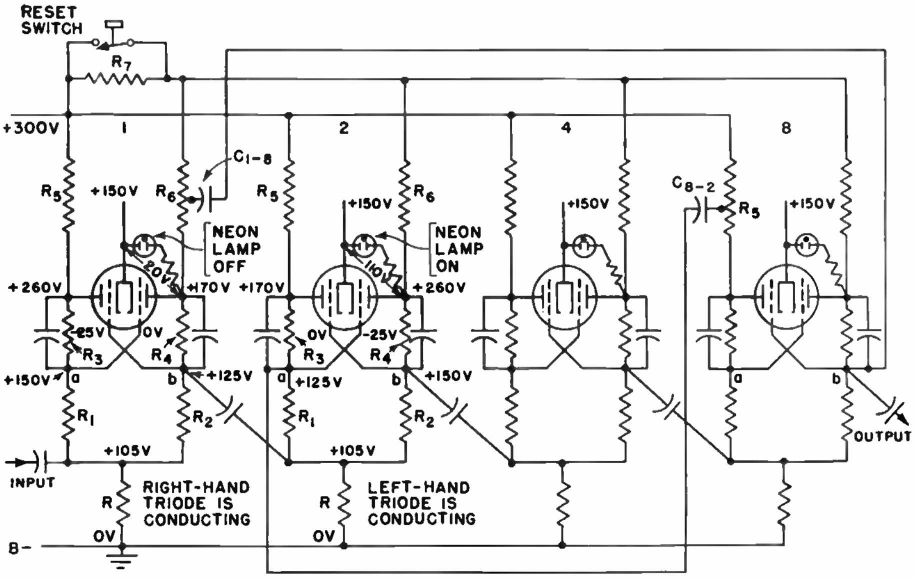

The grid of the right-hand triode is connected to point *a* (which is a cathode potential, as assumed for this explanation and as required for saturation plate current in this section). The grid of the left-hand triode goes to point *b*, which is at +125 volts with respect to ground and hence 25 volts negative with respect to the cathode. This being essentially the cutoff bias, the left-hand triode is nonconducting under the initial assumed conditions.

The stage is stable in this condition until a negative pulse (with respect to ground) is applied to its input circuit. Any positive pulse fed into the stage has no effect, because it is dissipated in the low impedance of the conducting triode section.

Upon arrival of a negative pulse at the input, both grids swing in a negative direction. There is no direct effect in the nonconducting left-hand triode since its grid is already at negative cutoff, but the negative grid swing of the right-hand triode stops its plate current. The resulting redistribution of voltage drops across R_6, R_4, and R_2 places point *b* at cathode potential, as indicated in stage 2. The grid of the left-hand triode swings positive to zero bias, and the left-hand triode conducts. Point *a* goes 25 volts negative with respect to the cathode, keeping the grid of the right-hand triode negative once it is driven negative by a negative input pulse. Thus circuit conditions in stage 2 with respect to right- and left-hand triodes are reversed.

With the right-hand triode nonconducting, its plate-cathode voltage goes up to about 110 volts, above the striking value of the neon lamp, and the lamp glows.

Arrival of a second negative pulse again triggers a stage, returns it to the original conditions, and extinguishes the neon lamp. Also, the swing in the potential of point *b* from +150 volts to +125 volts produces a negative pulse that is transmitted through the output capacitor of the stage to the input of the next stage.

A complete counter decade employs four identical stages, numbered 1, 2, 4, and 8 according to the binary system; the number assigned to each stage is equal to the number of negative pulses required at the input of the decade to make the neon lamp in the stage come on the first time.

In preparation for a count a momentary displacement of the reset switch inserts a common dropping resistor R_7 in the voltage supply line to all right-hand triodes. This drives the grids of all left-hand sections negative, so that the decade is preset with all right-hand triodes conducting and all neon lamps extinguished.

For its tenth operation, the decade must transmit a negative pulse to the succeeding decade and must reset to its original zero condition as required by the decimal system. This means that the tenth pulse must put out all lamps. The count of 10 in the binary system calls for lamps 8 and 2 being on; hence lamp 1 (on for the 9 count) will go out automatically. Forced resetting therefore means putting out lamp 8 and preventing lamp 2 from coming on.

After the ninth pulse, the left-hand sections are conducting in both stage 1 and stage 8. When stage 1 is reversed by the tenth pulse, a negative pulse obtained from a tap on R_6 in this stage is fed through capacitor C_{1-8} to stage 8, causing point *b* of this stage to swing negative. This drives the grid of the conducting left-hand section of stage 8 negative, causing a switchover and putting out neon lamp 8. (All points on R_6 of stage 1 are driven negative by arrival of the tenth pulse; the magnitude of the swing depends on the position of the tap, and can be as high as 90 volts at the plate end of R_6; thus the magnitude of the pulse is readily adjusted. It must be large enough to cause switchover by itself, but not too large, because at the eighth count it must be overpowered by the negative pulse that comes from stage 4 and correctly triggers stage 8 to turn on its lamp.)

In an essentially similar manner, a positive pulse obtained from a tap on resistor R_5 of stage 8 during the forced switchover of this stage is fed through capacitor C_{8-2} to point *a* of stage 2, where it completely overwhelms the negative pulse fed into this stage from stage 1. Since the lamp for stage 2 was out after the ninth impulse, it therefore stays out. (All points on R_5 of stage 8 are driven positive by the forced switchover of the stage; the magnitude of the swing depends on the position of the tap, and can be as high as 90 volts at the plate end of R_5, and thus the required pulse amplitude is easily obtained.)

Switchover thus provides the correct potential shift for forced resetting of the decade, and the correct direction of shift is obtained by making the capacitor connection. Positive pulses getting into stage 8 through C_{1-8} during previous counts have no effect because they are dissipated in the low-impedance path provided by the conductive section of stage 8.

A negative pulse from stage 8 through C_{8-2} to stage 2 at the arrival of the eighth pulse is not contrary to the normal input signal at that time. For all lower counts than 8 there is no switchover in stage 8, and hence no pulses are sent through C_{8-2} to cause trouble.

The capacitors across resistors R_3 and R_4 in each stage serve to short out these resistors momentarily during each impulse, thereby increasing the magnitude of the impulse available for triggering action.

This counter decade operates at pulse rates ranging all the way from above 100 kc down to as low a rate as desired, with no substantial changes in circuit constants. It is only necessary to provide a negative pulse at the input that is approximately the correct amplitude and shape. When sine-wave input exists, as from an oscillator that is started and stopped at the beginning and end, respectively, of the interval to be measured, a single multivibrator stage is generally inserted between the oscillator and the decade input for pulse-shaping purposes.

John T. Potter, A Four-tube Counter Decade, *Electronics*, June, 1944, p. 110.

Neon-tube-coupled Amplifier Circuit for Impulse Counting

Although originally designed for use in cosmic-ray detecting devices, the multistage amplifier arrangement shown here lends itself to a variety of industrial control problems where it may be desired to provide a definite and relatively large change in the output circuit of a control device with a relatively small variation in voltage of an input device.

The 6C6, biased to cutoff, serves as a detector. When a positive impulse is received by the grid of this tube, the 6C6 becomes conducting. For the condition of cutoff, the 6C6 is nonconducting, and the neon tube connected to its plate circuit glows because current flows from the 250-volt plate supply through the plate load resistor to the neon tube and returns through the grid resistor of the first type 76 amplifier.

When the 6C6 becomes conducting, the voltage drop through it is small compared with that across the neon tube, so that the latter is effectively short-circuited and ceases to glow. When the positive pulse is removed from the grid of the detector tube, the 6C6 stops conducting and the voltage in its plate circuit builds up to that required to initiate again discharge of the neon lamp. Consequently, the neon tube normally glows for grid voltages which are less positive than the cutoff bias but is extinguished for grid voltages on the detector which are more positive than the cutoff bias voltage.

The sudden starting and stopping of the discharge of the neon tube transmits a large voltage change to the grid of the first type 76 amplifier. A recording relay in the plate circuit of this amplifier might serve as a recording, or counting, device. Such a relay would normally be closed and would snap open when the signal is received.

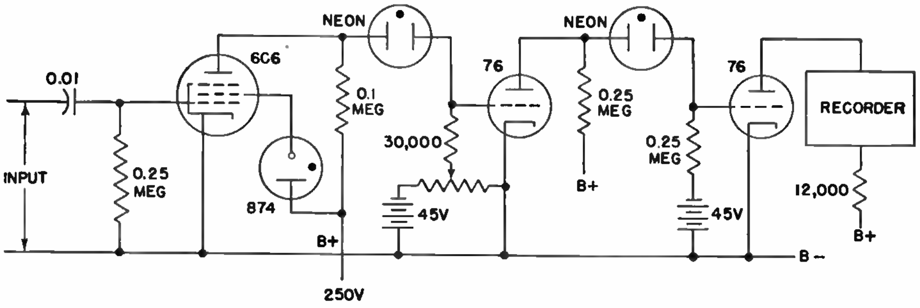

Since it is usually more desirable to produce a record with positive rather than negative pulses, another and similar stage of amplification with neon-tube coupling is provided.

The neon-tube coupling device may be replaced by any other gas discharge tube. Additional control of the operating characteristics may be obtained through the use of resistances in series with the neon tube.

F. A. Korff, A Neon Tube Coupled Amplifier Circuit for Radio Cosmic Ray Receivers, *Rev. Sci. Instruments*, August, 1938, abstracted as Amplifier for Impulse Counting, *Electronics*, November, 1938, p. 69.

Double-diode Counter Circuit for Measuring Beat Frequency

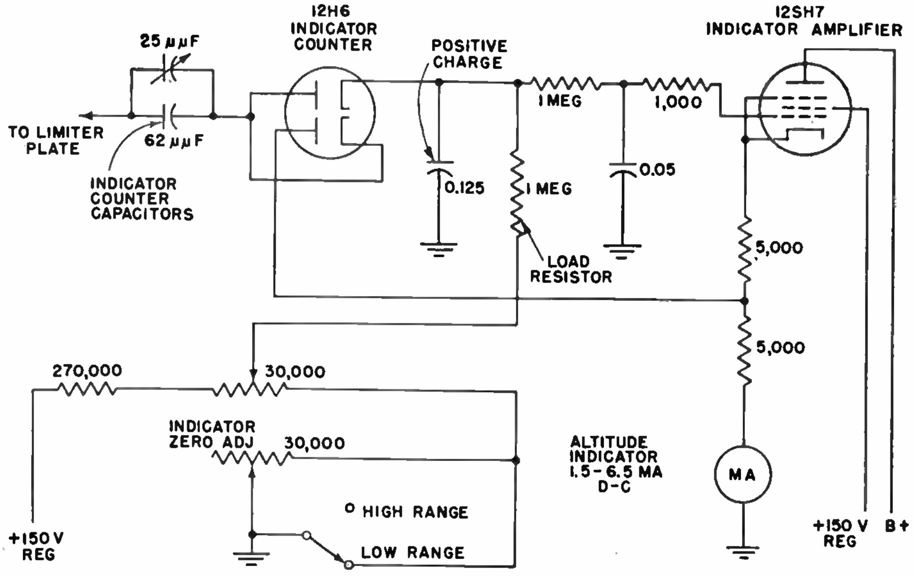

This circuit develops a positive d-c voltage that is proportional to the beat-note frequency present at the output of a preceding limiter stage. The arrangement was used in the APN1 frequency-modulated radar altimeter to measure the beat note between transmitted and received signals and to convert the resulting count of rectangular waves into an accurate indication of altitude on a direct-reading meter.

One section of the double diode passes the positive half cycles of the limiter output, charging a capacitor and load resistor in shunt. The resistance and capacitance values are so chosen that the charge on the capacitor leaks off through the resistor at a rate approximating the conduction of charge through the diode. Hence, when the positive rectangular waves arrive at a more rapid rate (higher beat note), the direct voltage across the capacitor tends to increase, and vice versa. This voltage is passed through a low-pass *RC* filter that averages the direct voltage and applies it to the grid of the indicator amplifier tube. A milliammeter in the cathode of the latter tube registers, over a range of 5 milliamperes, the average value of the direct voltage on the grid. This meter is calibrated directly in feet.

F-M Radar Altimeter, *Electronics*, April, 1946, p. 130.

Rate-of-occurrence Indicator Using Electronic Timer and 17-count Trigger Circuit

THIS circuit, developed initially as a machine-gun rate-of-fire indicator, can be used without change for industrial applications where a range of 600 to 900 movements of a punch press, printing press, or other machine is to be indicated directly and accurately by a meter. Other industrial applications include monitoring of life tests and acceptance tests of electromagnetic devices such as relays. For higher or lower rates, the circuit can readily be modified and a new meter scale calibration obtained.

Circuit action is initiated by a mechanical switch, such as a snap-action switch, connected to the input of an amplifying and pulse-shaping stage that feeds a series of five Eccles-Jordan trigger circuits to give a counting ratio of 16 to 1. The trigger output feeds through a gate tube and *RC* timing circuit to a delayed vacuum-tube voltmeter circuit.

The saw-tooth voltage pulse generated by momentary closing of the switch is differentiated into a negative pulse of short duration and is impressed on the grid of the input amplifier to be limited to the proper amplitude for the triggering of the counter circuit.

The timing circuit is controlled by the counter and its associated gate circuit in such a manner as to start and stop the timing action of the timer according to the time required to fire 17 rounds. This time interval is thus a direct measure of the rate of fire. A timing capacitor is charged for the exact duration of the counting period, and the resulting potential of the capacitor is a function of the charging time. This potential is measured by the delayed vacuum-tube voltmeter, which is calibrated to read in rounds per minute.

The counting operation depends upon each trigger stage having two conditions of stable equilibrium. Every impulse impressed on the input circuit causes a transition from one state of equilibrium to the other, two impulses being required to complete one cycle. Each stage following the first receives a negative triggering impulse upon every alternate operation of the preceding stage. Hence, the fifth trigger stage, which functions to control the gate circuit, remains in one state of equilibrium for the exact duration between the first and seventeenth rounds, or 16 intervals.

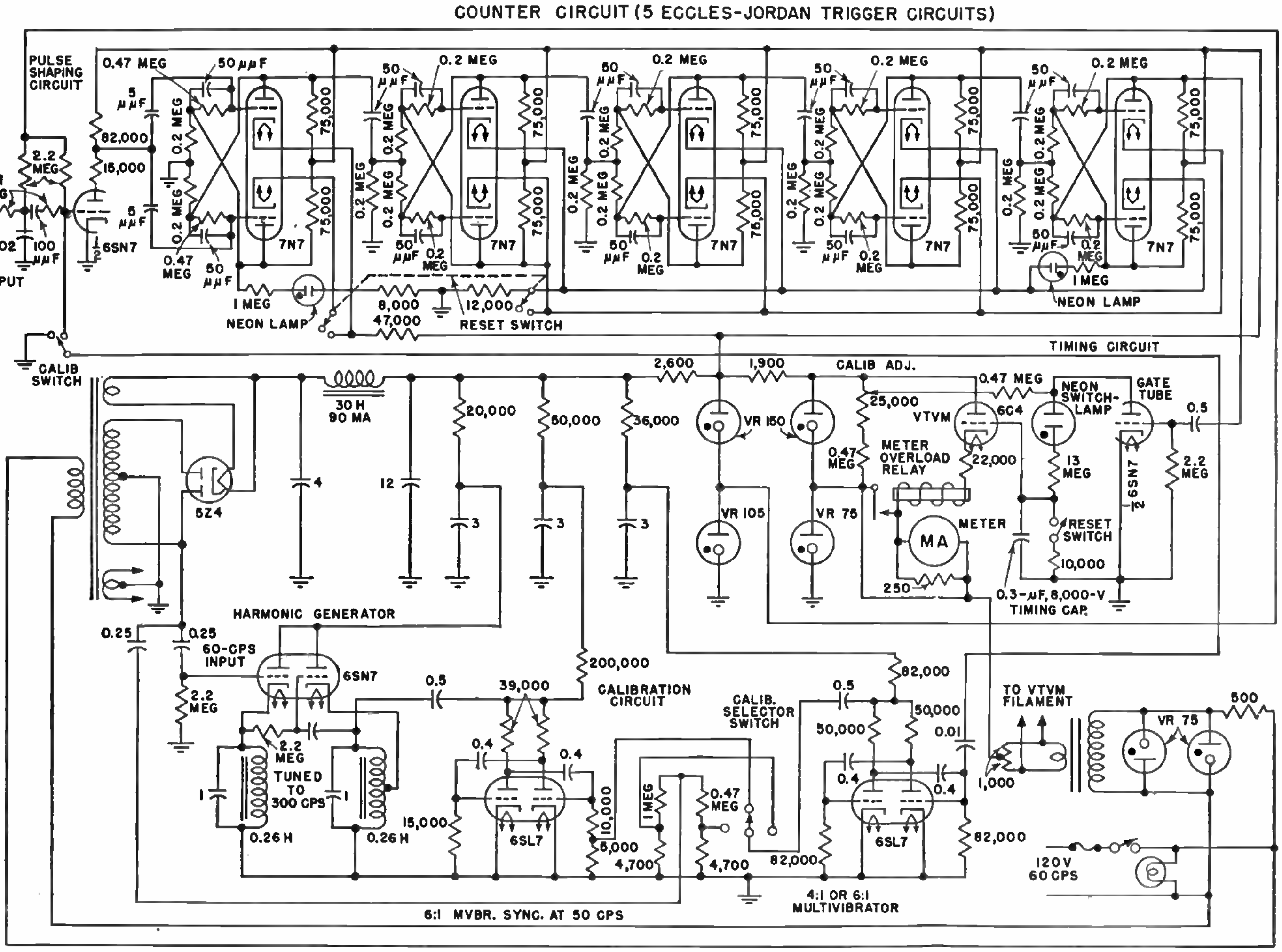

Any number of rounds between 17 and 32 can be fired but only the first 17 are counted and timed. A reset switch is provided for the purpose of restoring each trigger circuit to its initial state of equilibrium and also of discharging the timing capacitor in preparation for a firing test.

The neon lamps connected to the first and last counter stages serve as an added check on the operation of the instrument. One should ignite on the first impulse and not extinguish until the seventeenth impulse, while the other should glow on every other impulse from the mechanical switch.

Loctal type 7N7 tubes were used in the trigger circuits since the two triode sections of this tube have more identical characteristics than those of the equivalent type 6SN7 tubes. The mutual conductance of one section of a 6SN7 tube is greater than that of the other section.

The zero bias voltage on the grid of the gate tube causes the tube normally to conduct, and the current flowing through the plate load resistor results in a plate voltage of less than the igniting potential of the neon switch lamp. The potential of the timing capacitor is zero, it having been fully discharged during the operation of the reset switch.

Upon firing the first round, the final trigger circuit shifts its state of equilibrium, initiating a negative gate pulse that drives the gate tube far beyond cutoff. Since the *RC* time constant of the input circuit is longer than any interval to be measured, the grid remains cut off until the end of the gate pulse.

Thus the gate tube has an output pulse with an amplitude exactly that of the regulated power supply. This voltage is applied to the neon switch lamp, causing it to ignite and to start the charging of the timing capacitor. The voltage of the capacitor increases exponentially at a rate determined by the *RC* time constant.

After the seventeenth round has been fired, the final trigger stage reinverts to its initial state of equilibrium and a positive pulse is suddenly applied to the grid of the gate tube. This reduces the plate voltage to a value below that of the extinguishing potential of the neon switch lamp and cuts off the *RC* timing circuit, leaving the capacitor with a definite charge.

By this time, the timing capacitor has charged to a potential more positive than the plate voltage of the conducting gate tube, resulting in a sudden reversal of voltage across the neon switch lamp as it extinguishes. This reduces the deionization time and the error which would result from an inconsistent deionization time.

After the circuit through the neon switch lamp has been cut off, the timing capacitor should retain its charge over a reasonable period of time, to prevent the meter reading from drifting. The extent to which this can be accomplished depends upon the leakage of the capacitor itself and its associated circuit elements.

Leakage currents were minimized by removing the base from the neon switch lamp, replacing insulation of the reset switch with polystyrene, designing the vtvm to have high input resistance, and using a special oil-impregnated timing capacitor having a very high leakage resistance. Such a long *RC* time constant makes possible the holding of the charge on the capacitor without loss of more than 1 per cent in over 3 minutes.

The main consideration in the vtvm design was to obtain a high input resistance and high degree of accuracy.

A type 6C4 miniature tube was used because its electrodes pass directly through the glass, greatly increasing the insulation resistance as compared with ordinary tubes. Some input conductance also results from initial electron velocities emitted by the cathode. This was reduced by operating the heater of the vtvm at reduced voltage.

Filament-voltage regulation of the vtvm was found to be advantageous in maintaining meter calibration independent of line-voltage fluctuations, especially when operating the heater at reduced temperature.

The voltage applied to the timing circuit, the plate voltage of the vtvm, and the delay bias voltage must be well regulated. A two-stage cascade voltage regulator is used for this purpose. The regulated output voltage that is applied to the timing circuit is adjustable plus or minus 2.5 per cent from the front panel. This control is provided for making calibration adjustments to compensate for the effect of temperature variations on the timing circuit.

The range of the vtvm is determined by the value of the degenerative feedback resistance in the cathode circuit and the meter-damping resistance.

If for any reason the gun should not fire the full number of rounds necessary to stop the timing action, the timing capacitor would continue to charge until the grid potential of the vtvm approached zero. The plate current would then overload the meter. To remedy this condition, an overload relay is used in the meter circuit and operates when the current exceeds full-scale readings.

The meter scale is nonlinear because rate is an inverse function of time. This was also a reason for using delayed bias, since the meter would have otherwise read from infinity to 600 rounds per minute.

The divisions of the meter scale are individually calibrated. Calibration points were established by means of a variable low-frequency generator of known accuracy. The output of this generator was used to operate a polarized relay, the contacts of which were connected to the input of the indicator in the same manner as the mechanical switch unit.

The accuracy of the indicator is greatly increased by means of a multivibrator calibration circuit that generates pulse-repetition frequencies of 600, 750, and 900 per minute for checking and adjusting the meter indication.

When generating 10 or 15 cycles per second, the multivibrator is directly controlled by the 60-cycle line frequency, functioning as a 6 to 1 or 4 to 1 frequency-dividing circuit. When generating 12.5 cycles per second, the multivibrator operates at a 4 to 1 ratio, and is synchronized by a 50-cycle source that in turn is controlled by the 60-cycle line frequency. This is accomplished by means of a harmonic generator which multiplies the line frequency by five and a multivibrator which divides the result by six.

The harmonic generator is excited from the high-voltage winding of the power transformer, resulting in an unusually high negative bias and a plate-current pulse of short duration. The angle of plate-current flow was reduced to less than 36 degrees at the fundamental frequency so as to cut off the plate current during the first half cycle of the harmonic output frequency. This prevents the conducting tube from distorting the output wave form, and it increases the tank-circuit efficiency since part of its energy is not being dissipated through the tube.

The output tank circuit is tuned to 300 cycles per second. Since it is shock-excited by the plate-current pulse every fifth cycle, a periodically damped output wave form results. This voltage is impressed on the grid circuit of a self-excited oscillator through a peak-limiting resistor that also serves as a grid-leak resistor. The oscillator is tuned to the same frequency as the harmonic generator, and thus a synchronized output voltage of uniform amplitude and wave form is obtained.

This 300-cycle control voltage is applied to both plate circuits of the 6 to 1 ratio multivibrator in phase so as to favor even frequency ratios, thereby maintaining the required frequency division over wider limits of voltage variation.

The output of this 50-cycle multivibrator is directly injected into a 4 to 1 ratio multivibrator, via a selector switch, and 12.5 cycles per second, or 750 cycles per minute, are obtained.

The harmonic generator and multivibrators were found to stay in synchronization over extremely wide limits of line-voltage variation; therefore no voltage regulation was necessary.

A conventional rectifier-filter type of voltage supply is provided for operating the unit. The first regulated output supplies 255 volts to the counter circuits and the input stage. A second regulated supply follows the first and has a d-c output of 210 volts that supplies the timing stage and the vtvm stage. To prevent the initial current surge through the voltage-regulator tubes when the instrument is first turned on, a 5Z4 heater-type rectifier tube was selected.

Although the total current drain on the high-voltage supply is only 65 ma, a fairly large power transformer was used in order to supply the filament drain of 4.8 amperes.

The voltage-regulated supply for filaments has an a-c output of approximately 5 volts, which is applied to the vtvm heater. Two type VR75 tubes are connected back to back across the primary of the filament transformer, and a resistor is connected in series with the line to limit the peak voltage applied to the transformer. The potential of the secondary winding is 75 volts above ground, the same as the cathode bias of the vtvm.

Arvid D. Peterson, Machine Gun Rate-of-fire Indicator, *Electronics*, December, 1945, p. 134.

Simplified Scale-of-sixteen Circuit for Counting Impulses

In this vacuum-tube scaling circuit the necessity for using coupling tubes is eliminated by applying pulses directly to the cathodes. The numbers in the circles on the diagram indicate the output taps for different scale ratios, with the final stage delivering one output pulse for every 16 input pulses.

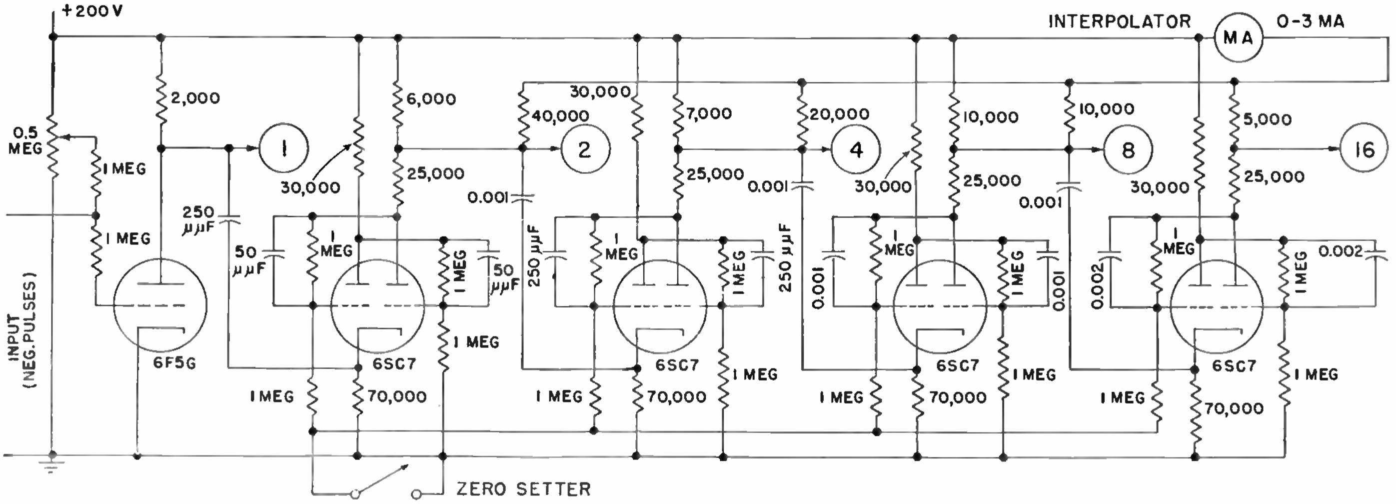

The height of the impulses fed to the cathode of the first scaling stage is limited to 6 or 8 volts by making the plate resistor of the 6F5G only 2,000 ohms, so that the total voltage drop across it is a maximum of about 6 volts. The grid-bias arrangement for the input circuit provides means for selecting only pulses that are larger than a given size.

The difference between the cathode potential and the grid potential of the nonconducting half of the scaling tube is an important factor in determining the stability and sensitivity of the circuit. If the difference is too small, the circuit may switch back to a preferred state of equilibrium or even oscillate, while if too large, the sensitivity to incoming pulses decreases. This difference can be adjusted by making the cathode resistors variable, with a range from 50,000 to 100,000 ohms.

When the right-hand side of a tube becomes conducting, its grid is at first driven positive so that the output voltage dips below its final at-rest value. The return to the at-rest value can constitute a positive pulse that, if circuit constants differ from those specified here, may trip the next stage.

Don DeVault, Simplified Scaling Circuit, *Rev. Sci. Instruments*, January, 1943, p. 23.

Portable Geiger-Müller Counter for Locating Lost Radium

This battery-operated Geiger-Müller counter, suitable for detection of lost radium, uses an automobile ignition coil to obtain the required high voltage for the counter tube. A voltmeter is included to indicate the high voltage.

Essentially the radium detector consists of a Geiger-Müller counter tube, a three-stage resistance-coupled amplifier feeding a loudspeaker, and the necessary power-supply unit. The high-voltage supply necessary for the counter tube is provided by means of a Ford spark coil, a capacitor, and cold-cathode tubes, the combination giving a source of reasonably smooth direct current of practically any desired voltage. The voltage of the high-voltage supply depends upon the adjustment of the vibrator. Objectionable hum in the loudspeaker is eliminated by properly shielding and bond-

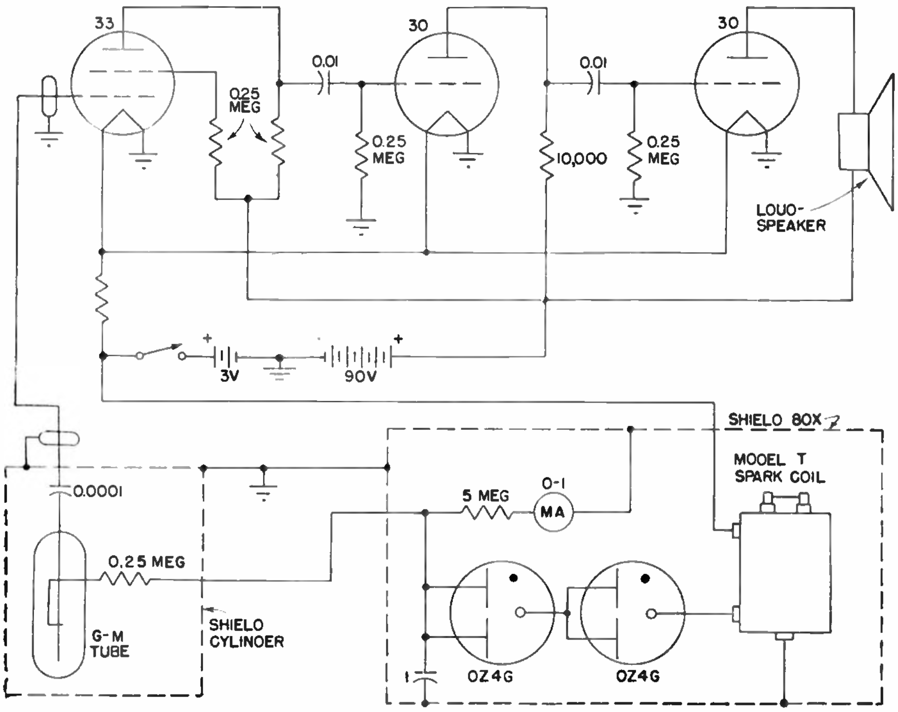

ing the circuit. Cold-cathode 0Z4G tubes connected in series are used as the rectifier.

In use the instrument may be carried about until a greater number of pulses than normally due to cosmic radiation is heard from the loudspeaker. Doubling of the count normally obtained from cosmic radiation is regarded as the criterion of detection of radium. Twenty milligrams is detectable at about 135 feet with no obstruction intervening.

Robert B. Camp, *Rev. Sci. Instruments*, December, 1937, abstracted as Battery-operated Device for the Recovery of Lost Radium, *Electronics*, March, 1938, p. 64.

Geiger-Müller Counter as Supersensitive Fire Detector

Far ultraviolet radiation from open fires, flames, sparks, and electric arcs is utilized in this electronic fire-detector circuit that gives practically instantaneous response to minute sources of fire or sparking. A special Geiger-Müller counter tube is employed, having a copper-screen cylinder sealed in an envelope of Corning 9741 quartz glass that allows over 80 per cent of the radiation at 2,600 angstrom units to pass. In the spectrum portion used for fire detection, below 3,000 angstroms, daylight has no effect because the earth's atmosphere absorbs these wavelengths, and artificial light has no effect because glass envelopes of lamps absorb far ultraviolet.

The circuit operates a relay as soon as the average input pulse rate from the Geiger-Müller tube increases above a certain predetermined value. This is accomplished by a circuit that injects a charge on a capacitor-resistor combination for every pulse received, thus essentially integrating or averaging the pulse rate over a time interval of the order of the time constant of the combination.

The negative pulses received from the sensitive tube are inverted in one triode unit and fed into a cathode-follower type of *RC* tank, the potential across the latter controlling a thyratron relay circuit that in turn controls whatever alarm device is to be activated.

The averaging time constant is given by the product *RC*. The sensitivity is determined mainly by the duration of the positive control pulses reaching the cathode follower, which are determined by the product *RC* and by the absolute magnitude of the charging tank capacitor *C*. Also, the negative grid-bias control of

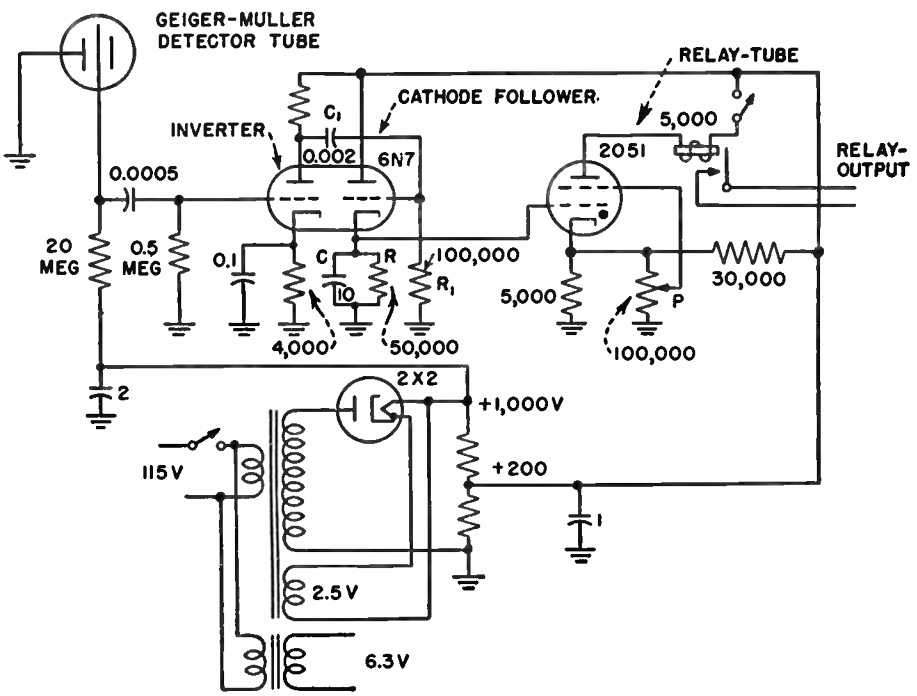

the thyratrons, accomplished by potentiometer P, provides a simple adjustment over a limited range of sensitivity.

A projected cylinder area of about 30 sq cm for the detector tube gives a natural average background rate of less than two pulses per second due to cosmic rays and natural radioactivity, as contrasted with about 100 per second for a lighted match 30 feet away. The device will respond practically instantaneously to the striking of a match at a distance up to 60 feet in any direction from the detector tube. This extreme sensitivity may in many practical applications be undesirable. It is possible to reduce this sensitivity by any number of means, the most natural one being the choice of the proper dimensions of R, R_1, C, and C_1 so that the charge transmitted to C per pulse received is small enough to require an appropriately large number of pulses to trigger the thyratron.

Paul B. Weisz, Electronic Fire and Flame Detector, *Electronics*, July, 1946, p. 106.

Quenching Circuit for Geiger-Müller Counter

AN easily adjusted regulated voltage supply and an electronic quenching circuit are provided here by only five tubes.

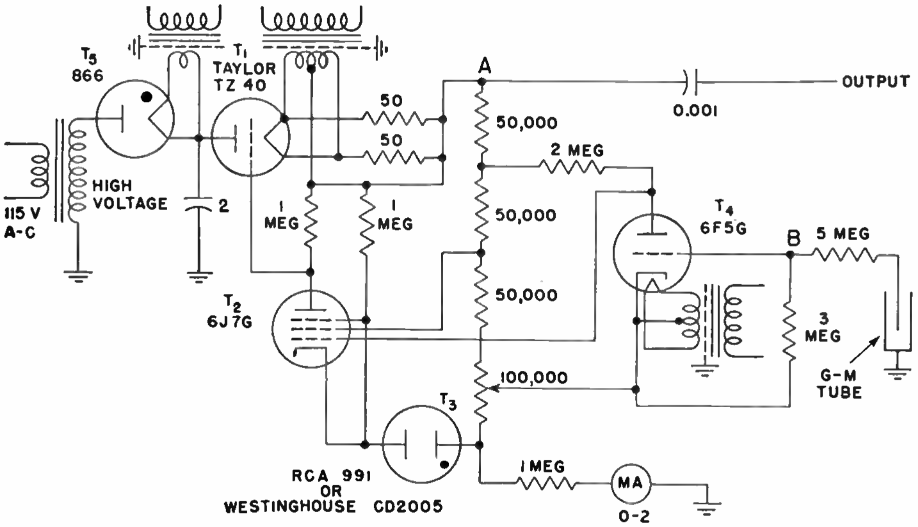

The output pulse is large enough to actuate headphones directly or to feed a recording or scaling circuit with little or no amplification.

When no current is flowing in the G-M counting tube, triode T_4 acts as a resistance only, and the circuit gives a stabilized output voltage between point A and ground and hence between point B (the G-M tube central wire) and ground. When a discharge occurs in the counting tube, a negative bias is produced at T_4, increasing its effective resistance. The current through pentode T_2 accordingly goes up because its grid is tied to the plate of T_4, and the grid of T_1 is therefore driven negative so that the potentials of points A and B drop until the counter discharge is extinguished. As soon as the grid of T_4 regains its normal potential with respect to the cathode, the circuit resumes its at-rest position in readiness for the next count. A 100,000-ohm potentiometer in the voltage-divider network permits adjusting the voltage on the counting tube over a wide range, from 800 to 1,800 volts.

Good insulation is required throughout, with Lucite or steatite standoffs for the connection from the counting tube to the grid of T_4. Tube T_1 can be some other type of triode provided that it has a rather high amplification constant. Filament transformers should have grounded shields between primary and secondary to prevent a-c hum pickup.

William F. Bale and John F. Bonner, Jr., A Combined Voltage Regulating and Quenching Circuit for the Geiger-Müller Counter, *Rev. Sci. Instruments*, July, 1943, p. 222.

Combination Mechanical Counter and Electronic Integrator for G-M Tubes

IN this typical modern Geiger-Müller counting circuit, the high-voltage supply (not shown) for the G-M tube is obtained by a voltage-doubling arrangement using two dry-disk rectifiers and a smoothing circuit, with a rheostat in series with the primary winding of the power transformer for voltage control. The bleeder consists of a suitable meter in series with a 6-megohm resistor. Since operating conditions vary from tube to tube, this voltmeter is a precaution against damaging the tube by application of too much voltage.

Extinction tube V_1 is in a normal Neher-Harper circuit. For optimum operation, the bias of V_1 is adjusted by means of P_1, so that the tube is just cut off. In this condition a slight increase of voltage of the cathode of the G-M tube owing to an ionizing particle entering the tube causes current to flow in V_1, thus causing the voltage across the tube to fall considerably (due to the large anode load R_3). The effect is cumulative, and the extinction of the G-M tube is hastened. While many tubes are of the self-extinction type, some are designed for use with extinction circuits. Even with self-extinction tubes, an extinction circuit is often advantageous.

The negative pulses from the G-M tube are taken from the anode of V_1 and are sent through C_2 and a grid resistor R_7 to the grid of V_2. Thus, in the absence of a pulse, the grid of V_2 is held at cathode potential by R_1 and R_8. The arrival of a pulse at the grid cuts off the current in V_2, resulting in a positive pulse at the anode of V_2.

Cutoff bias for V_2 is only about minus 2 volts, and consequently all negative pulses of amplitude greater than 2 volts give the same output from the anode. Since the pulse amplitude from a G-M tube (especially when used with an extinction circuit) is almost invariably considerably greater than 2 volts, this arrangement results in a satisfactory amplifier limiter.

Tube V_3 serves different purposes, depending on the position of switch S_1. The central position of S_1 disconnects this tube entirely, blocking the circuit. In both of the other positions of S_1, transformer T_1 is in the circuit. This transformer feeds a phone jack to provide an audible indication of counting, useful in determining threshold voltages and in ensuring that no considerable number of counts are missed by the multivibrator circuit due to too high a rate of count.

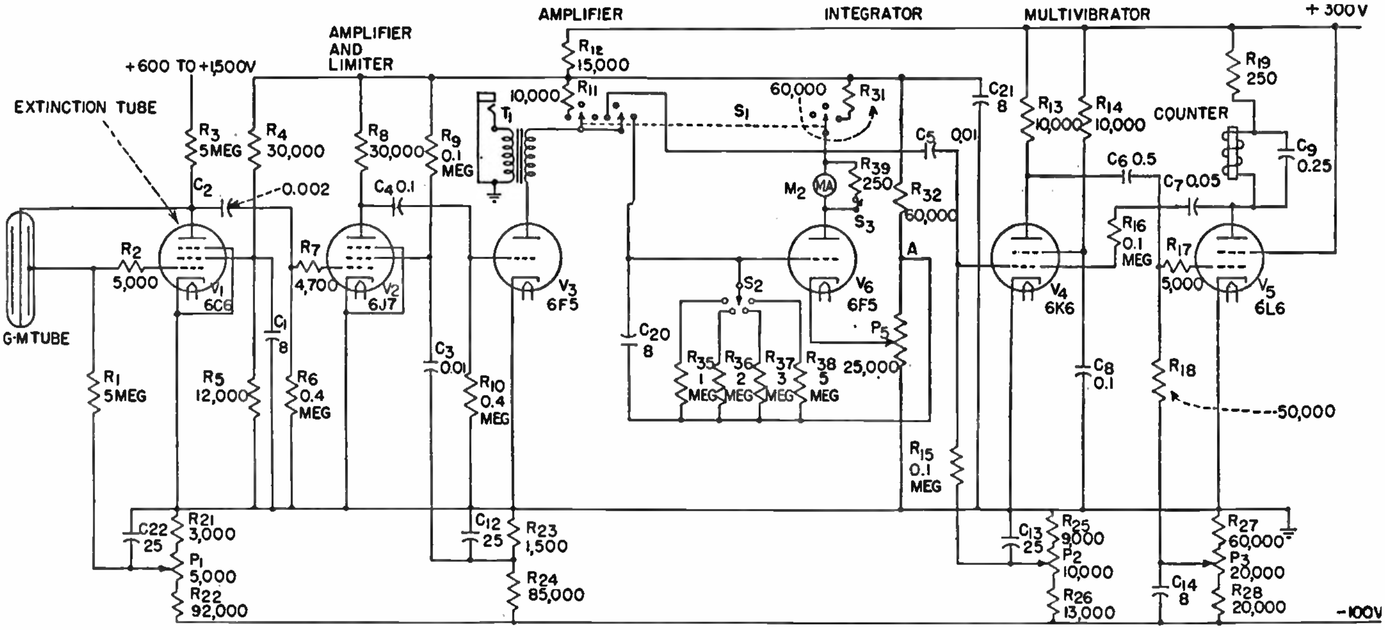

When S_1 is over to the left, V_3 acts as a straightforward amplifier with the grid biased by means of R_{23} and R_{24} and with an anode load R_{11}. Negative pulses are then fed through C_5 to the grid of V_4 to trigger off the multivibrator circuit formed by V_4 and V_5.

In the absence of pulses, V_4 passes a predetermined current. Power tube V_5 is biased beyond cutoff by the resistance chain R_{27}, R_{28}, and P_3, and thus no current flows through this tube.

When a negative pulse arrives at the grid of V_4, this causes less current to flow in V_4, and hence the anode voltage rises. This rise of voltage is fed through C_6 and R_{17} to the grid of V_5. Thus current commences to flow in V_5, and the drop of voltage at the anode is fed back through C_7 and R_{16} to the grid of V_4, causing still less current to flow in this tube and increasing the voltage charge on the anode of V_4 and the grid of V_5. The whole process is cumulative and ceases when V_4 is cut off. The current through V_5 must be sufficient in amplitude and duration to operate the electromagnetic counter used.

The duration of the current in V_5 is largely determined by the time constant of C_7, R_{16}, and R_{15}, which is made much shorter than that of C_6R_{18}. After a count, C_7 discharges through R_{15} and R_{16} and the grid potential of V_4 climbs toward its original voltage. This initiates cumulative action again, and the circuit quickly returns to its original stable state with V_4 on and V_5 cut off.

With this circuit, the limit to the speed of counting is definitely fixed by the counter itself, since the times required to build up the various voltage charges around the circuit are negligible.

When switch S_1 is over to the right, the integrator is in the circuit. The high-voltage supply for V_3 is then obtained from point A on the resistance chain formed by R_{32} and P_5. The anode load of V_3 (neglecting R_{32}) is then C_{20} in parallel with one of the resistors R_{35}, R_{36}, R_{37}, and R_{38}.

When S_1 is over to the right, it also applies high voltage to V_6 through R_{31} and meter M_2. The grid of V_6 is fed directly from the anode of V_3 (neglecting T_1). When no pulses are being fed to the grid of V_3, the current in V_6 is determined by the setting of P_5 and the potential of the grid (tied to the anode of V_3).

When positive pulses arrive at the grid of V_3, each one causes a pulse of current through V_3. This current is pumped out of C_{20} during the on period of the pulse and the charge builds up again during the off period. The rate of build-up is determined by the value of C_{20} and by the resistance in parallel with it. If the pulses are sufficiently frequent, the grid of V_6 adjusts itself to a new steady voltage, the current pulses being smoothed out by C_{20} and R_{35}. The voltage at the grid is such that the current leaking through R_{35} (or R_{36}, R_{37}, or R_{38}) to restore the charge on C_{20} equals the average current being pumped out of C_{20}.

This reduction of potential of the grid causes less current to flow through V_6 and hence through the meter. The greater the rate of arrival of pulses at the grid of V_3, the greater is the mean current flowing out of C_{20} and the greater will be the voltage drop across R_{35} to allow this to flow. The current through V_6, which is dependent upon the grid-to-cathode voltage, will thus be a measure of the rate of arrival of pulses at the grid of V_3. The meter in the anode circuit of V_6 therefore indicates the counting rate.

Since increase in the counting rate results in a decrease of current, the meter reads backwards. The meter is calibrated from 100 to 0 from left to right, and must be set to zero (extreme right of scale) before a count is taken.

With only the background count present, P_5 is adjusted until the meter reads zero. When a count is taken, the deflection decreases and, by comparison with a standard source, a quick measure of the count is obtained. It is advisable to obtain the same deflection on the meter in both measurements and to compare the strengths of the two sources by means of their distances from the counter. The inverse square law relates counts to distance.

Switches S_2 and S_3 give a choice of eight different sensitivities for use with different power sources.

The integrator is most useful for fast rates of counting, for under this condition the efficiency of the smoothing circuit is greater and the current pumped out of C_{21} is nearer to a continuous flow. For low counting rates, the needle becomes unsteady and consequently accuracy is lost. The time taken to operate the mechanical counter sets an upper limit to the counting rates for which this method can be used. The highest speed counter readily available will count at a rate of 16 per second (960 per minute). Since a G-M count is a count of random events, for absolute accuracy none of these must occur within 1/16 second of each other. The randomness of the events reduces the actual rate of counting that can be measured with accuracy. With one of the counters mentioned above, the upper limit for accurate counting is about 600 per minute.

With the integrator, the slowest rate of counting is dependent upon the duration of the pulses, the time constants of the circuits, and the meter itself. This last factor makes calculation of the slowest rate rather complicated, but is of the order of 100 per minute. There is thus a good overlap between the two methods.

The integrator method is, of course, less accurate than the mechanical counting method. If accurate high-speed counting is required, scaling circuits must be introduced.

A. Graves, Modern Geiger-Muller Counters, *Electronics*, January, 1947, p. 80.

Counting-rate Meter Circuit for Use with Geiger Counters

Counting rates up to the order of 5,000 per second are indicated directly by the meter in this counting-rate meter circuit, originally developed for rapid scanning in a Geiger-counter focusing spectrometer used in measuring X-ray intensities and diffraction angles of powdered chemical and metallurgical samples directly and speedily in routine industrial processes as well as in laboratory research.

The circuit comprises a uniform pulse producer actuated by the Geiger-counter tube and a pulse-averaging circuit. The averaging is accomplished in a resistance-capacitance tank provided with a selection to make up time constants of 5, 10, and 20 seconds. Uniform pulses are derived from a succession of pulse-shaping, amplifying, and limiting stages.

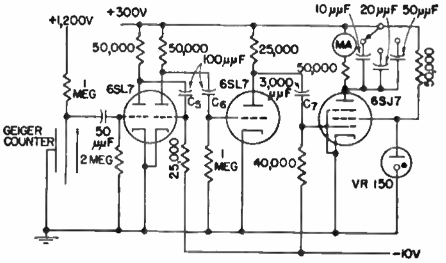

The Geiger-counter anode is coupled through a small capacitor to a two-stage preamplifier mounted in the same housing as the counter tube. The pulses developed on the counter wire appear as negative pulses, sharpened and amplified, in the output of the preamplifier. A third stage of amplification and differentiation suffices to equalize all pulses at counting rates up to 3,000 per second. These uniform pulses are applied to the grid of the averaging stage.

The resistance-capacitance averaging tank is placed in the anode circuit of a pentode. In this arrangement, the amplitude of each pulse delivered to the capacitor is independent of the voltage across it. The parallel resistor draws leakage current in proportion to the capacitor voltage; microammeter *MA* in series with the resistor serves to measure the current. A choice of capacitors permits adjusting the charging time or speed of response of the indicator. Circuit constants and supply voltages are selected to yield approximately 1 microampere per pulse per second.

H. Friedman, Geiger Counter Spectrometer for Industrial Research, *Electronics*, April, 1945, p. 132.

Neon-tube Relaxation Oscillator for Measuring Weak Radiant Energy

Under certain conditions the frequency of oscillation of a neon-tube relaxation oscillator depends upon the character and amount of radiation striking the neon tube. This phenomenon is utilized in the accompanying circuit to provide a sensitive radiation-measuring circuit. The electrodes of the neon tube are photoelectrically active, and the extra electrons liberated in the presence of light or other radiation reduce the voltage at which flashes occur, thereby increasing the frequency of flashing.

Successful operation depends on a sufficient difference between the flashing potential and the extinguishing potential. The output of the relaxation oscillator feeds a two-stage amplifier that drives an electromagnetic counter for indicating the total number of flashes. An integrating type of counting circuit can of course be used in place of the electromagnetic counter if direct indication is desired and the flashing rate is sufficiently high.

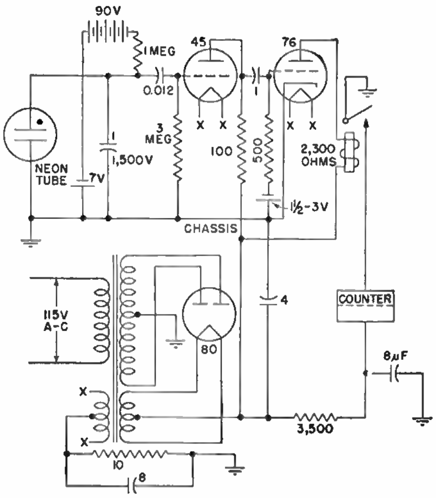

O. Cameron Gruner, A Neon-counter for Medical Research, *Electronics*, December, 1944, p. 284; A. Stager, Relaxation Circuit Measures Radiant Energy, *Electronics*, July, 1937, p. 29.

Alternating-current-operated Electronic Cardiotachometer for Indicating Heart Rate

This circuit indicates directly the heart rate of a patient, on a meter calibrated in beats per minute. The electrical impulses that accompany the muscular action of the heart are picked up by flexible electrodes that may be attached to almost any conveniently accessible part, such as arms or legs.

The first three vacuum tubes are conventional triodes used as amplifiers. The electrodes are connected to the first triode through a shielded cable, the shield being used for one lead. When in use, there is no impedance between the grid of the first triode and ground other than the impedance of the subject between the electrodes. When not in use, or when the electrodes are being adjusted, the grid is shorted to ground by the switch.

The next two tubes are both driven by a common connection to the adjustable gain control in the output of the third triode. The control is located at this point because the amplification is so great that were it located earlier there would be violent disturbances following any adjustment. These result largely from thermal potentials between resistor and sliding contact.

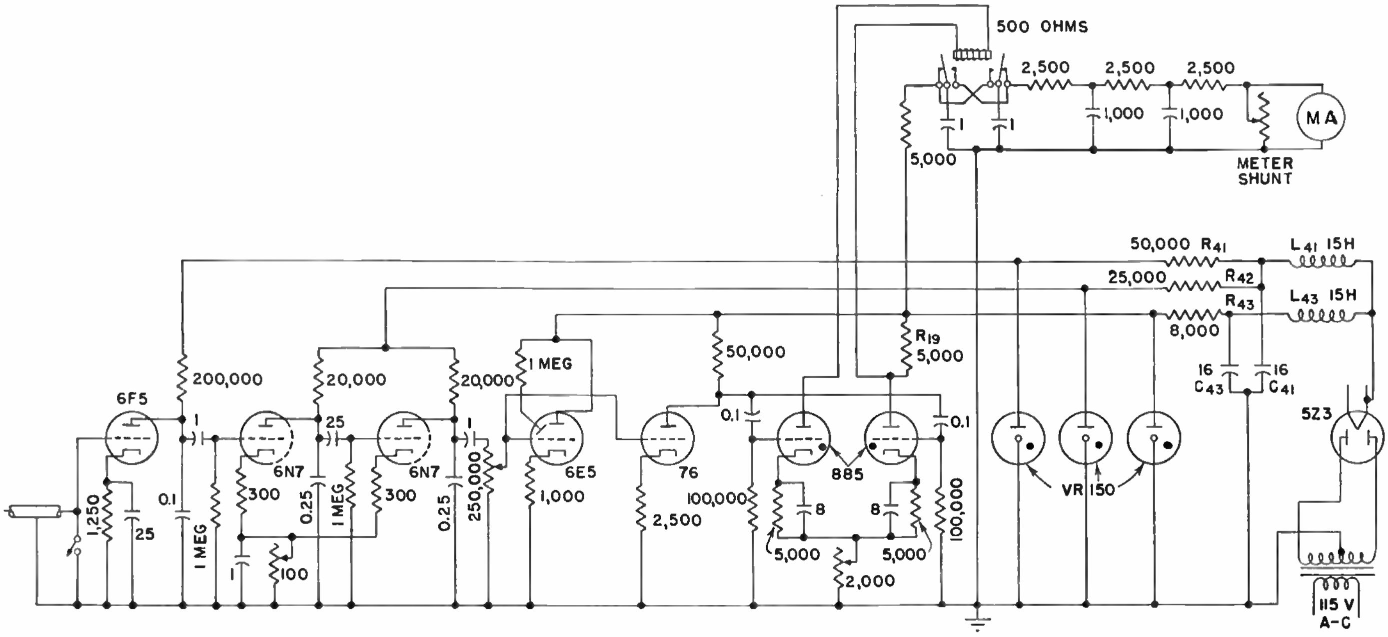

The function of the 6E5 cathode-ray indicator tube is essentially that of a peak voltmeter, showing the magnitude of any signal impressed upon the grid of the final amplifier tube.

The type 885 gas triodes cause current to pass through the windings of a relay during alternate intervals between pulses. At any instant one tube is conducting and the other is nonconducting. With the circuit in this condition, the voltage relations are such that an impulse impressed on the grid circuits will cause the breakdown of the nonconducting tube. This in turn causes the extinction of the conducting tube and the reestablishment of a stable condition in which the relations between the two tubes are interchanged. The relay, being connected in series with one of these tubes, thus carries current when that tube is operated, or during every other pulse interval.

The circuit associated directly with the relay develops a direct current proportional to the rate of relay operation. The relay performs a double transfer, a pair of capacitors being connected alternately and in turn to a source of fixed potential and to a discharge circuit. The current in the discharge circuit is thus proportional to the quantity of electricity constituting the charge on one capacitor and to the rate at which this quantity is delivered to the discharge circuit by the relay. The resistance-capacitance network is used to prevent varying components of the discharge current from appearing in the meter. The deflection is therefore virtually steady and proportional to the original pulse rate. The discrimination of the amplifier against frequencies of 60 cycles a second and higher is an important factor in the design of the power-supply system. The low frequencies of the signal components bring in an added difficulty, inasmuch as they make the usual type of decoupling filter quite ineffective.

Current for the high-level portion of the circuit, which includes both the final amplifier stage, the gas triodes, and the capacitor-charging circuit, is delivered through a network having as series elements L_{43} and R_{43} and as shunt elements C_{43} and the third voltage-regulator tube. This network constitutes a simple form of hum-elimination filter. Current for the first, or low-level, stage is taken from the common rectifier through a similar network.

In any multistage amplifier it is necessary to prevent current changes in the high-level stages from affecting the voltage of the power supply to the low-level stages.

With the arrangement shown, any current surges in the gas triodes or charging circuit produce a small potential change across the third regulator. The regulator tube is more effective in reducing this change than the usual filter capacitor would be as it is virtually independent of the rate at which the change takes place. From this point in the circuit the disturbance has to pass through both of the power-supply networks in tandem in order to reach the first stage. The final element in this combined network, the first voltage regulator, is again a very effective means of reducing the magnitude of such voltage change as remains.

The network supplying plate power to the intermediate stages has L_{41} and C_{41} in common with the network for the first stage. It has the separate resistance R_{42} and the separate voltage-regulator tube. Those portions of the two networks which are not common, together with the common capacitance C_{41}, form a single network for suppressing the interchange of voltage variations between stages.

Because of the low frequency of the signal it is possible to utilize a form of regeneration that is effective for the signal but not for power-supply interference.

The cathodes of the two similar 6N7 triode stages are connected together, and the combined plate currents flow to ground through a common resistance. A voltage introduced into the grid circuit of the first triode will cause changes in the plate currents of both tubes. The change in the plate current of the second tube will be greater than in that of the first and will be of opposite sign. The net change will be of opposite sign to that which would take place in the cathode resistor of a single tube.

The voltage across the cathode resistor will appear in the grid circuit of the first tube, therefore, with the same sign as the impressed voltage that originally produced the change. It will appear in the grid circuit of the second tube as of opposite sign from the amplified voltage impressed by the first tube. The effect of this voltage will be greater in the first tube than in the second because of the amplification. The net result, therefore, is that the common cathode resistance produces a regenerative effect.

This regeneration through cathode coupling is of distinct advantage in the cardiotachometer, not only because of the increased gain that it provides, but because it may be made selective for the signal components. The frequencies of desired signal components are below those of interference; hence a capacitor may be chosen that offers a path of low impedance to the interference but not to the signal. It consequently prevents regeneration of the interference without impairing that effective for the signal.

The low-frequency end of the transmission characteristic of the cardiotachometer is controlled by the values of the interstage blocking capacitors and grid-leak resistors. The high-frequency end is controlled by shunting a capacitor of the proper value between the plate of each tube and ground.

The circuit by which a current proportional to the pulse rate is developed is similar in principle to the familiar capacitor charge-and-discharge circuit, but one capacitor remains on charge and a second capacitor on discharge for one entire interval. During the succeeding interval the capacitors are interchanged, the fully charged unit being connected to the discharge circuit and the fully discharged unit to the source of charging potential. To ensure that each capacitor delivers a full charge every time it is transferred, a relay making positive contact must be used.

J. Warren Horton, An Electronic Cardiotachometer, *Electronics*, August, 1938, p. 14.

Twin-thyratron Counting Circuit for Rapid Neurological Impulses

Though originally developed to obtain a continuous count of action potential spikes of nerves, involving rates of several hundred per second, this particular circuit is sufficiently flexible in its range of count to justify its being considered for many other applications where a relatively inexpensive means of obtaining a continuous count over long periods is desired. A counting rate of 300 to 1 is obtained with the circuit constants shown, so that for a count of 600 per second the relay, or electromagnetic counter, would operate twice a second.

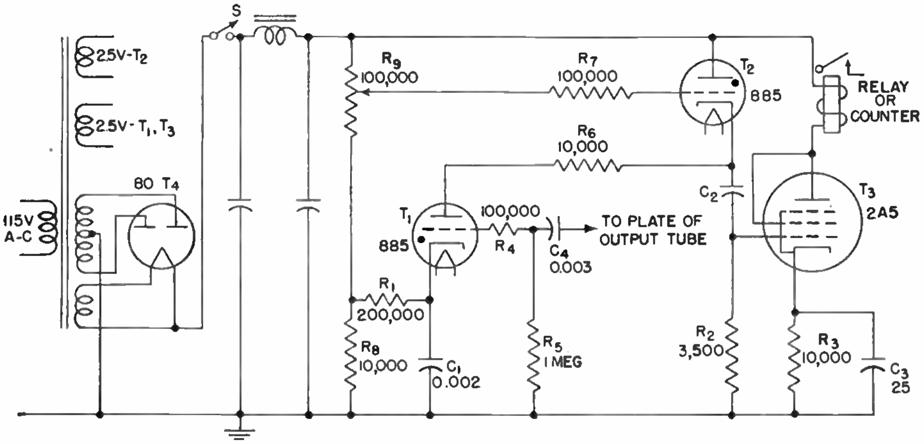

The impulses to be counted are amplified and impressed on the grid of thyratron T_1 with positive polarity. Thus C_1 partly discharges through T_1 at each impulse. C_2 is charged from the power supply through T_2 and loses a small part of its charge to C_1 each time an impulse reaches the grid of T_1.

A value of 200,000 ohms for R_1 is high enough to ensure that discharge current will become small enough to be stopped by the negative grid. R_2 is inserted to limit the discharge current to the safe rating of T_1. As successive charges accumulate on C_2, its potential increases until the breakdown voltage of the second thyratron T_2 is reached. The breakdown voltage of T_2 is determined by its grid bias, which may be varied to determine the counting ratio, or number of input impulses for each output impulse. The cathode voltage of T_2 may be applied to the grid of a vacuum triode that will operate a relay, mechanical counter, or other recording device.

Potentiometer R_9 is used to set the counting ratio at a desired value. Switch S in the plate supply is turned on only when the cathodes have reached their operating temperature. Closure of this switch is followed by a single output impulse as C_2 is initially charged through T_2.

When the heaters of T_1 and T_2 were operated from the same filament winding on the power transformer, it was found that there was a current flow from cathode to heater which resulted in a continuous loss of charge from C_2, so that T_2 behaved as a relaxation oscillator, thus giving spurious output pulses when no input pulses were present. This current, which is only a small fraction of a milliampere, may be attributed to electron emission from the heater. It is therefore necessary to supply the heater current for T_2 from a separate winding on the power transformer.

Calibration was accomplished by utilizing the sweep pulse of a cathode-ray oscilloscope as a signal. The sweep was locked at 300 cycles and connected to the input transformer, or grid, of T_1, and R_9 was adjusted until exactly one output pulse per second was obtained.

The counting ratio can be varied over a considerable range by varying the setting of R_9, but if ratios far different from 300 to 1 are required, C_1 and C_2 may be changed. The counting ratio may be increased by increasing the value of C_2, but the time constant of the discharge circuit of C_1 must be small compared with the interval between the incoming pulses. This time constant in seconds is equal to C_1R_1 where C_1 is expressed in microfarads and R_1 in megohms.

Bertram Wellman and Kenneth Roeder, Electronic Counter for Rapid Impulses, *Electronics*, October, 1942, p. 74.

DIRECT-CURRENT AMPLIFIER CIRCUITS

Screen-coupled D-C Amplifier with Cathode Follower

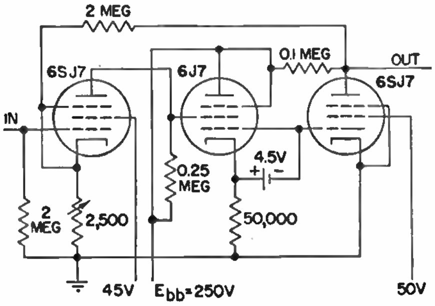

A SCREEN-COUPLED cathode follower provides flat response up to 20 kc and a total voltage gain of 60 db in this circuit. The total distortion is less than 1 per cent at 15 volts output. The 6J7 is used as the screen-coupled cathode-follower stage. The circuit is highly degenerative, and there is no appreciable change in output for a 6-hour run after the initial warm-up period.

Higher gain with less wide response can be obtained by removal of the 2-megohm feedback resistor connected from the plate of the output 6SJ7 to the cathode of the input 6SJ7. The cathode resistance of the input stage is then fixed at 150 ohms. Frequency response of the modified circuit is flat up to 12 kc, and the total voltage gain is 76 db. At 15 volts peak output, the total distortion is 2.5 per cent.

Y. P. Yu, Cathode Follower Coupling in D-C Amplifiers, *Electronics*, August, 1946, p. 99.

High-current D-C Amplifier with Low-impedance Output

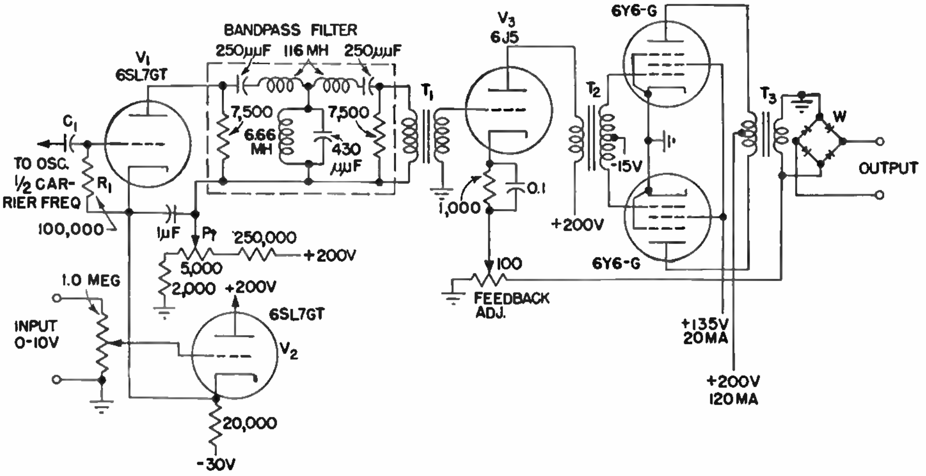

DELIVERING current of 1 ampere to an oscillograph element of 3 ohms impedance, the d-c amplifier shown employs a carrier-current system terminating in an output transformer and a dry-disk rectifier. Stability is high and operation for several months is possible without adjustment.

An external oscillator supplies carrier excitation to the grid of modulator tube V_1. This tube is operated as a class *C* amplifier, so that its carrier-frequency output is proportional to its plate voltage. The plate voltage of tube V_1 is supplied by the d-c input signal through a cathode follower V_2. The carrier output of modulator tube V_1 passes through a band-pass filter that passes the carrier frequency and the side bands, and thence it passes through a power amplifier, an output transformer, and a dry-disk rectifier. The d-c output of the system is taken from the rectifier.

The no-signal plate voltage of V_1 is adjusted by potentiometer P_1, which permits utilizing input signals of either polarity. The cathode follower V_2 is arranged to drive the cathode of V_1 instead of the plate. A negative signal at the grid of V_2 thus increases the voltage between the plate and cathode of V_1.

The band-pass filter should pass the carrier frequency and the upper and lower side bands. If the percentage of bandwidth is small, a tuned circuit can be substituted for the filter.

For an over-all response of 0 to 4,000 cycles, the carrier frequency chosen was 30 kc. The filter was designed for a nominal bandwidth of 25 to 35 kc.

Because of the high carrier frequency, special transformers had to be built for use at T_1, T_2, and T_3. At 10 kc and below, ordinary audio transformers should be satisfactory.

The rectifier *W* at the output of the system is a Federal selenium unit, type 5B1AV1. At 30 kc, the efficiency of dry-disk rectifiers is about half that obtained at lower frequencies. If a lower maximum frequency of over-all response is usable, a lower carrier frequency can be employed with a consequent reduction in the size of the power amplifier.

The maximum output is 1.2 ampere into 3 ohms. Input signal for maximum output is 10 volts direct current. Input impedance is 10 megohms. Frequency range is 0 to 4,000 cycles.

Lawrence Fleming, A D-C Amplifier of High-current, Low-impedance Output, *Electronics*, August, 1945, p. 212.

High-gain Wide-band Direct-coupled Amplifier

HIGH stability and a voltage gain of 5,000 from 0 to 100,000 cycles are features of this direct-coupled amplifier. Its input impedance is 100,000 ohms and a balanced input attenuator (not shown) reduces the input signal to an amplitude that is proper for the grid of the first stage and for control of output potential.

Immediately following the input attenuator is a three-position switch which grounds either side of the amplifier input for use with signals which are unbalanced with respect to ground. An ungrounded position is provided for use of the amplifier in the conventional balanced manner.

To compensate variations, such as drift, change in gain, change in output level, and other factors, the balance of the amplifier is controlled by adjustment of potentiometers R_{17} and R_{20}. The balance control for this amplifier is merely an adjustment for the potential of the grid of T_3, which adjustment is obtained by varying its position along the cathode resistor of T_2. Potentiometer R_{20} has a wide range of control, and it is mounted on the chassis of the instrument for adjustment only during service and maintenance. Potentiometer R_{17} functions as a vernier on R_{20}, and is mounted on the front panel for use as a spot-position or pattern-centering control.

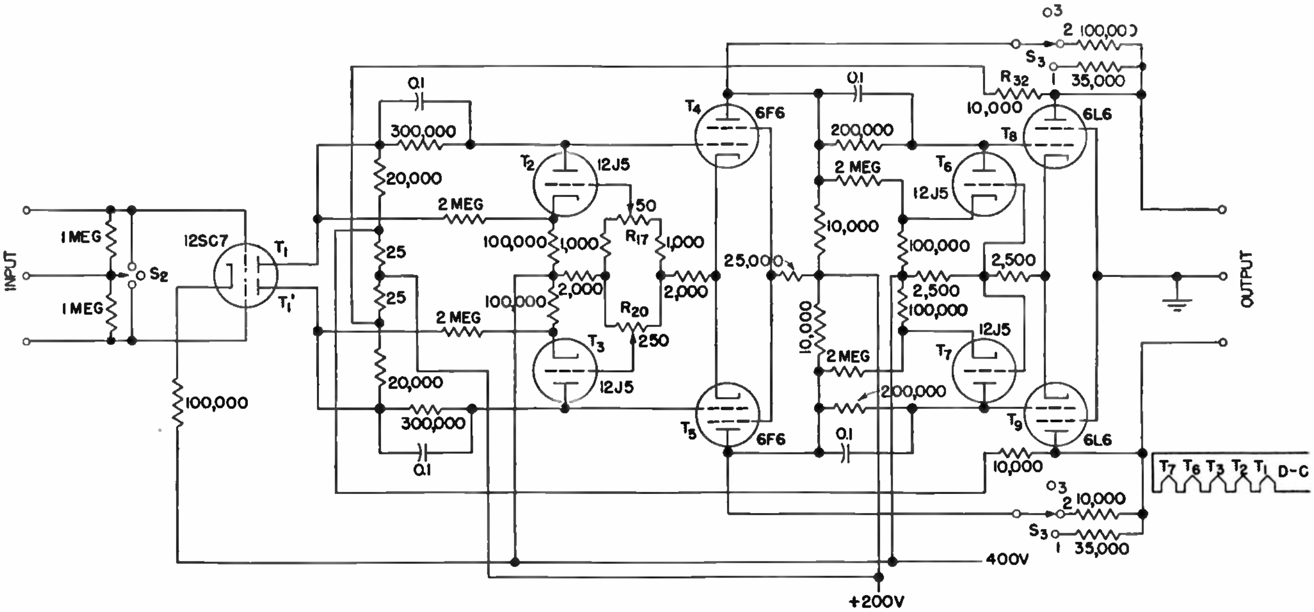

Negative voltage feedback is employed to vary the voltage gain, to stabilize the voltage gain, to reduce drift, to broaden the frequency response, and to reduce the effective output impedance of the unit.

One feedback circuit extends from the plates of the output tubes to the plates of the input tubes. To obtain the proper polarity for negative feedback, the two balanced sides of the amplifier must be cross-connected. This type of feedback minimizes differential variations between the two sides of the push-pull amplifier. The feedback elements between T_8 and T_1' are 10,000 and 20,000 ohms.

Negative voltage feedback also is employed to control voltage gain. This is accomplished through feedback used independently on each phase of the balanced unit. T_8 feeds signal voltage back to T_4, and T_9 feeds back signal to T_5. S_2 is a two-section gang switch that controls the feedback simultaneously on each channel. Positions are provided for voltage gains of 1,000, 2,000, and 5,000 times.

Since the interstage coupling elements T_2, T_3, T_6, and T_7 are the most likely single sources of instability in the amplifier, their internal characteristics are kept as nearly constant as possible by operation of their heaters from a regulated d-c source. This precaution has been found to contribute greatly to the freedom from drift. In this connection, also, it was found highly desirable to employ commercial precision resistors for the plate load resistors of the coupling tubes because of their low temperature coefficient of resistance.

Inasmuch as the input stage receives no compensation of any type, and to reduce a-c ripple in the amplifier output, the heater of this tube also is operated from a d-c source.

Power for the complete amplifier is supplied by three separate rectifier-filter systems. The output of each system is controlled by an electronic regulator. The first system has an output of +200 volts. The second system furnishes regulated power for operation of all heater circuits that require d-c operation. The third system has an output potential of −400 volts for operation of the amplifier.

The amplifier was designed for direct deflection of a type 5LP5 cathode-ray tube that is operated with a second-anode potential of 1,000 volts and an intensifier-electrode potential of 2,000 volts. Instability and drift cannot be observed on the screen of the tube.

G. Robert Mezger, A Stable Direct-coupled Amplifier, *Electronics*, July, 1944, p. 106.

Grounded Input and Output for D-C Amplifier

CERTAIN industrial control applications of d-c amplifiers require that the controlled unit, a motor, solenoid, or heater, be operated at ground potential. A method of obtaining such operation with a two-stage d-c amplifier is shown. It uses a cathode-coupled output circuit with a series voltage-regulator tube to reduce degeneration. High amplification of alternating, steady, or slowly changing voltages is provided.

Using one VR150, a load current of 30 milliamperes can be handled. Two or more tubes can be paralleled for higher current or, if division of the load between the VR tubes cannot be made equal, a thyratron can be used. Capacitor C_x may be required to improve operation at audio frequencies. Parasitic oscillation is prevented by resistor R_2 and capacitor C_2. Tubes having higher anode current capabilities can be used in place of the 6A3 in the output stage for devices requiring large currents.

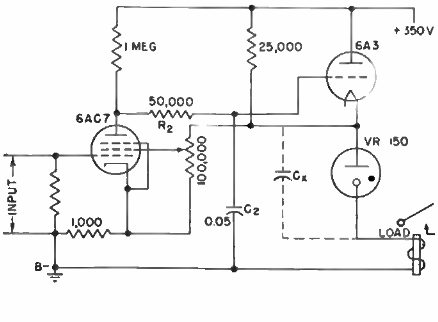

Operating Circuits with Grounded Loads, *Electronic Industries and Electronic Instrumentation*, February, 1947, p. 7.

High-sensitivity D-C Amplifier with Stabilized A-C Power Supply

THIS amplifier is designed to measure very small currents or voltages from a high-impedance source. Special features incorporated are increased linearity, good stability, and a regulated power source.

The input tube of the amplifier was carefully selected, as low grid current is necessary and high amplification is desirable. Of many tube types tested, the miniature tube 12BE6 was found to be the most suitable. It has a grid current only slightly higher than that of special electrometer tubes and at the same time it has the advantage of a high amplification factor in addition to being generally available and much less expensive.

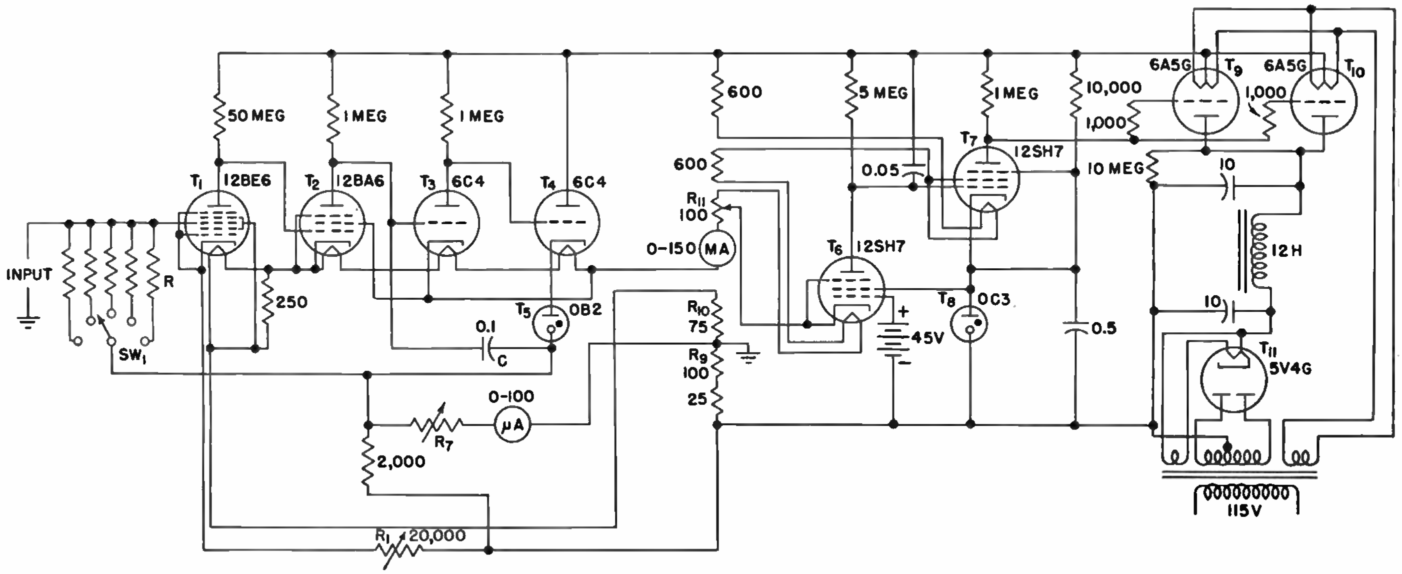

At the most satisfactory operating point, the plate voltage is 12 volts, the screen voltage (grids 2 and 4) is approximately 7.5 volts, and the control grid (grid 3) is negatively biased to 2.5 volts. Grids 1 and 5 are connected to the cathode. The heater current is reduced to 105 ma. Under these conditions, the grid current is about 10^{-13} to 10^{-14} ampere and the amplification factor is between 200 and 300. The tube must be well shielded from light and coated to prevent surface leakage.

The amplifier circuit is based on an amplifier described by Roberts. Three stages of voltage amplification are used, followed by a cathode follower as the last stage. For stability, the tubes are heated from the regulated power source.

The sensitivity is changed by a Shallcross No. 4765 switch in which the Bakelite base plate has been replaced by one of polystyrene. Zero adjustment is made by means of R_1. The meter together with the series resistor R_7 forms a 1.0-volt meter.

The input tube is washed carefully with absolute alcohol and dipped into polystyrene lacquer. It must be well shielded against stray pickup and light and protected from sudden temperature changes. It is preferable to mount the input tube inside an evacuated vessel. A polystrene tube socket is used for it, and all input leads are insulated by means of polystyrene.

Capacitor *C* is used to quench oscillations. Depending on the layout, it may be necessary to change the connections and/or size of this capacitor to suppress oscillations.

All supply voltages are obtained from the regulated source, which is powered from the 115-volt a-c line. The filaments of the regulator tubes in the source as well as the filaments of the tubes in the amplifier form part of the bleeder.

The limiting factors of the stabilization obtainable are the temperature variations of the resistors and of the characteristics of T_6. To minimize these effects, the resistors, particularly those in the bleeder, were Advance-wire wound. If it should be desirable to increase the stabilization still further, the power supply and the amplifier would have to be placed in a constant-temperature chamber.

The stabilization ratio is greater than 25,000. If slightly reduced performance can be tolerated, the battery may be eliminated and the grid of T_6 returned to the mid-point of a 100,000-ohm resistor connected across T_8. The stabilizer current through the milliammeter is adjusted by varying R_{11}, and it should be set to operate at 135 ma.

After preliminary adjustment of the power source, it and the amplifier should be allowed to run for 24 hours. During this baking period the tube characteristics will largely stabilize. Final adjustment can then be made. If the instrument is to be used continually, it is best to operate it 24 hours a day as there tends to be a small drift during the first 2 hours of operation. Variation in line voltage of 10 per cent has a negligible effect.

H. S. Anker, Stabilized D-C Amplifier with High Sensitivity, *Electronics*, June, 1947, p. 138.

Sensitive Low-drift D-C Amplifier Using Cathode-control Circuits

HIGH sensitivity and stability, negligible zero drift, low noise level, and flat frequency response up to at least 12 kc are features of this a-c operated d-c amplifier circuit. A cathode-control amplifier eliminates slow drifting such as is caused by changes in ambient temperature, while gaseous discharge coupling tubes enable cascade stages having a gain of about one million to be operated from a single 250-volt regulated power supply.

Input resistance may be any value from zero to several megohms. Both input terminals are normally at low potential, with one grounded. Both voltage and current output terminals are available simultaneously. Current output is ±5 milliamperes, and voltage output is ±80 volts peak from a balanced output circuit. Thus an Esterline-Angus 5-milliampere recorder may be used, or a 4-inch pattern may be produced on a cathode-ray tube having a deflection sensitivity of 40 volts per inch. Full rated output is obtained for an input of 0.35 to 10 millivolts.

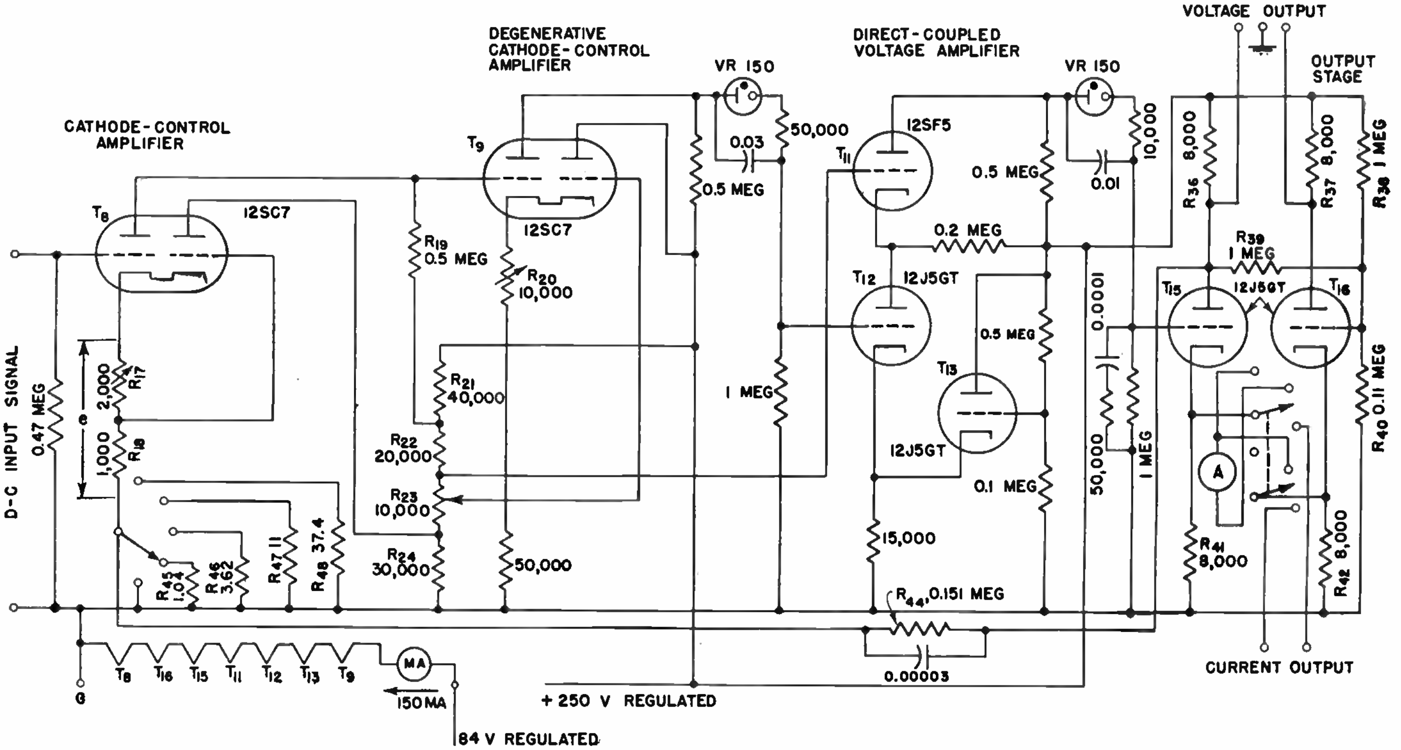

Transconductance is variable from 14 mhos to 0.50 mho. Voltage gain is variable from 72 db to 102 db. The overall voltage feedback is varied from 15 to 45 db. Uniform response is obtained from direct current to 12,000 cps or 20,000 cps (depending upon the sensitivity setting) from a low-impedance source. Noise level is 4 microvolts peak or roughly 1 microvolt rms with the input shorted, or 16 microvolts peak with input resistance equal to 0.5 megohm. The amplifier is independent of line voltages greater than 94 volts when used with a good regulated 250-volt power supply.

The cathode-control amplifier used to overcome drift uses a tube having two sections arranged around a common cathode. The first section functions as an amplifier, and the section serves as a control section. Plate-circuit resistor R_{19} is made large compared with the internal plate resistances, under which condition the voltage e across R_{17} and R_{18} will be zero for R_{18} equal to $1/g_2$, where g_2 is the transconductance of the second section. The result is that the amplifier employing the first section will be nearly independent of heater voltage fluctuations over a wide range. The cathode-control circuit is equally effective in overcoming the effects of ambient temperature variations and other changes common to both portions of the common cathode.

A degenerative type of cathode-control circuit is employed in the next amplifier stage. Here e is made very small but not quite zero. The plate resistor is omitted and the grid connection for the second section is moved to the plate-voltage-divider network, but the operation is otherwise the same as for the balanced cathode-control arrangement.

Interstage coupling is achieved with a cold-cathode glow tube, which functions as a constant-voltage device for currents as small as 10 microamperes. This permits use of a grid resistor as large as 2 megohms, with a grid bias of only about 40 volts. The bias is made up in the cathode circuit. It is possible to view the gas tube as a blocking capacitor that functions right down to direct current. The transmission index of this circuit is very nearly unity, and by a proper alteration it can be made to function over almost any desired frequency band.

The selector switch in the cathode of the first stage is the gain control. The third stage, which employs three tubes, is a form of direct-coupled voltage amplifier. Tube T_{13} is used to obtain a low-impedance 40-volt drop in the cathode of T_{12}.

The output stage is balanced in a forward-acting manner through R_{39} and R_{40} and errors in resistance values and differences in tube constants are reduced through the degeneration caused by R_{41} and R_{42}. Resistance R_{38} is used to obtain the proper d-c bias on T_{16}. Using resistances with ±10 per cent tolerance for R_{39}, R_{38}, and R_{40} and resistances with ±2 per cent tolerance for R_{36}, R_{37}, R_{41}, and R_{42}, the output stage is balanced within 2 per cent. The switch in the cathode circuit of T_{15} and T_{16} is used to connect an external current load in either of the two possible phases, or to connect an internal current meter into the circuit for the purpose of lining up the amplifier.

It is necessary to shield low-level leads adequately, to provide good ventilation, and to use low-temperature-coefficient resistors at points where small variations in resistance values will cause noticeable amplifier drift. There are few points in this circuit where the tolerance on resistance values need be less than ±10 per cent, but there are numerous points where small variations in resistance during operation of the instrument will cause noticeable zero drift. In particular, it was found necessary to use Advance-wire resistances for the following: R_{18}, R_{19}, R_{21}, R_{22}, R_{24}, R_{45}, R_{46}, R_{47}, and R_{48}. Tubes T_8 and T_9 were mounted on sponge-rubber cushions to eliminate microphonic effects.

Stewart E. Miller, Sensitive D-C Amplifier with A-C Operation, *Electronics*, November, 1941, p. 27.

High-gain Direct-coupled R-F Amplifier for Boosting Output of Signal Generator

THE output of the average r-f signal generator can be boosted tremendously with this high-gain direct-coupled amplifier, as required for such applications as measuring antenna resistance with a bridge.

An amplifier for this purpose should be completely shielded and nonoscillating. It is advantageous to have a low-impedance output to match the low-impedance cables furnished with the bridge. The circuit shown meets all these specifications. The reason for making it direct-coupled is that this does away with all untuned circuits between the 6K7 and the 2A3, allowing the 6K7 to produce a relatively high gain.

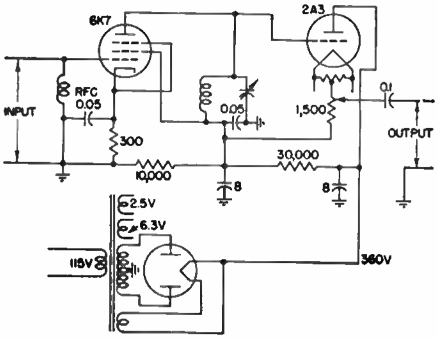

If it is desirable to have a constant output impedance, the output voltage of the amplifier may be varied by detuning the tuned circuit. No values are shown for the tuned circuit as its values depend on the frequencies over which the amplifier will be used.

Earle Travis, Direct-coupled R-F Amplifier, *Electronics*, December, 1946, p. 154.

Regenerative D-C Amplifier as Spike-pulse Generator

THIS circuit generates two sets of sharply peaked waves 180 degrees out of phase with each other, which have any desired phase relation with respect to the a-c line voltage, as required for current or timing control in welding circuits and other applications of gaseous tubes.

If in the circuit shown the grid bias V_g is sufficiently negative, T_6 will not conduct, and T_5 will pass a plate current determined principally by the plate-supply voltage and the sum of the resistances of R_1, R_2, and R_3, since the bias on this tube is now zero. If the grid of T_6 is driven in a positive direction now, T_6 begins conducting at about −20 volts on the grid, and the resulting plate-current flow through R_4 produces a voltage drop that drives the grid of T_5 negative with respect to its cathode. The resulting lower plate current of T_5 lowers the plate-current flow through R_1, since the contribution made by T_6 to this cathode-resistor current is negligibly small. Thus for each small change in the bias voltage V_g there is a larger change in the voltage drop across R_1 and therefore a still larger change in the grid-cathode potential of T_6, giving the desired regeneration. By proper choice of the coupling or feedback resistance R_1, the feedback can be made so great that current through T_5 falls suddenly and discontinuously when bias V_g is driven in a positive direction to a critical value, and the current does not return to its original value until this bias has been made definitely more negative.

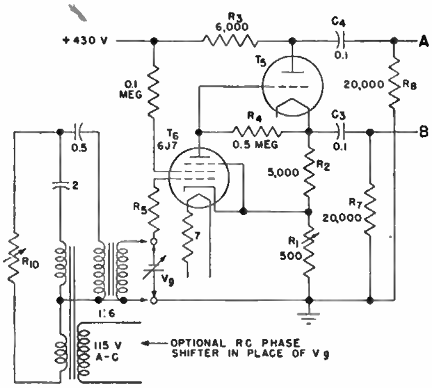

Resistance R_5 may be as large as 100 megohms, and hence may be a phototube used also to introduce the control signal V_g. Another possibility, suitable for a welding control circuit, involves making feedback resistance R_1 equal to 1,100 ohms, which makes the critical voltage V_{g_1} equal to −7 volts and makes V_{g_2} − 7 volts. Under these conditions the bias voltage may be replaced by a simple power transformer having a peak voltage in excess of 7 volts. This makes the plate current through T_5 a nearly perfect square-top wave that is in exact synchronism with the incoming a-c signal for any frequency over a wide range. Sharply peaked waves, 180 degrees out of phase with each other, can now be obtained from points A and B by virtue of resistor-capacitor coupling through C_3-R_7 and C_4-R_8, respectively.

Additional windings on the grid transformer can provide power for the optional resistance-capacitor phase shifter shown on the diagram, so that the grid-transformer primary voltage can be shifted over a range of 180 degrees with respect to the line voltage by varying the total value of R_{10} from zero to infinity. This resistance can be several different sizes of rheostats in series, to permit precision control of phase as required in many welder timing applications.

Wayne B. Nottingham, An Electronic Circuit to Control Intensity and Timing of Power for Spot Welding, *Rev. Sci. Instruments*, June, 1943, p. 161.

Direct-current Amplifier for Automatic Bias Control of A-F Output Stage

HERE is a method of obtaining automatic bias control for the grids of the output tubes of an audio amplifier, to combine the advantages of fixed bias with the reliability and ease of operation of self-bias. A pair of type 2A3 triodes will deliver 15 watts with extremely low distortion and 35 watts with distortion low enough to be unnoticed on short peaks if this automatic bias control is provided. It makes use of a novel form of d-c amplifier to set the grid-bias voltage to such a value that the plate current of the output tubes is held to the proper value.

An increase in plate current increases

the voltage drop across the 15-ohm resistor in the lead from the filament center tap to ground, driving the grid of the right-hand 6F8G more negative with respect to its cathode and reducing the plate current drawn through the upper 1-megohm resistor by this tube. As a result there is less voltage drop across the upper 1-megohm resistor, the grid of the left-hand 6F8G swings more positive, this tube draws more plate current through the 100,000-ohm resistor to increase the voltage drop across it, and the bias control line swings more negative from its minus 15-volt quiescent value. The increase in output stage plate current thus produces an increase in negative bias on the stage, as desired.

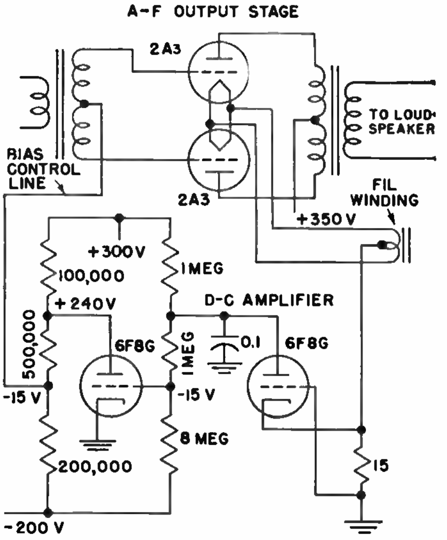

Lincoln Walsh, paper presented at Rochester Fall Meeting, 1940, and abstracted in *Electronics*, December, 1940, p. 24.

Radium-type Vacuum Gage Using Roberts D-C Amplifier Circuit

Gas molecules are ionized by alpha particles from a pellet of radium, in linear relation to gas pressure, and the resulting ion current is collected and measured with this special high-gain d-c amplifier circuit using an acorn tube and having up to 10^{12} ohms input resistance.

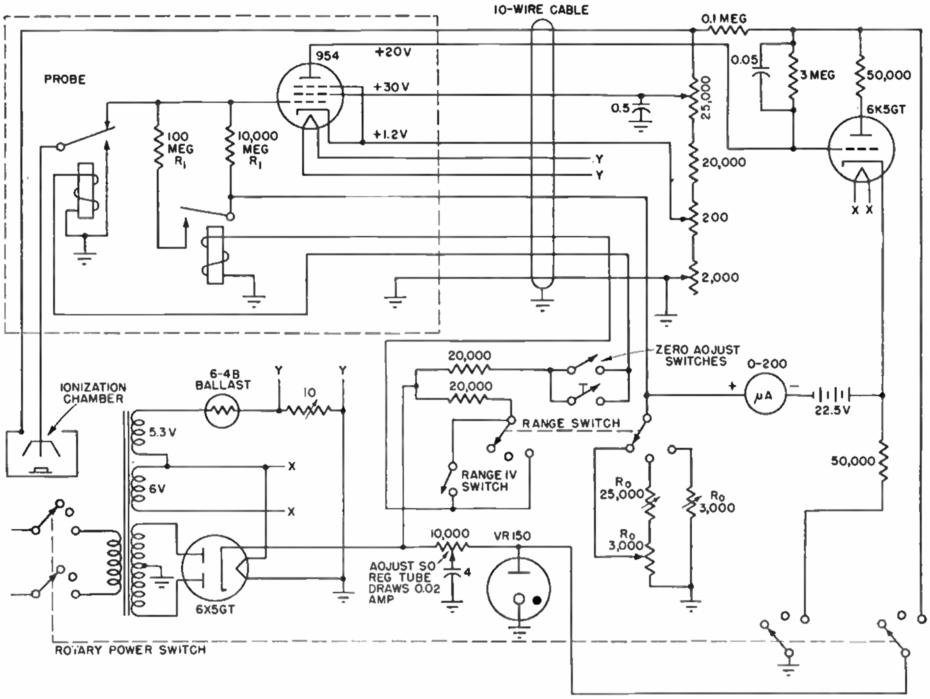

Use of the ionization effect in the high-pressure range avoids lag in readings. There is no filament to burn out and no filament current to set and maintain in the gage itself, no degassing to be done when the gage is turned on, and no fragile parts. The three ranges cover linearly the interval between 1 micron and 10 millimeters required in a number of industrial processes, with scales of 0 to 100 microns, 0 to 1 mm, and 0 to 10 mm.

At pressures above about 25 mm the recombination of ions produced in the chamber becomes appreciable and linearity is lost, although the gage may be calibrated for pressures up to and beyond atmospheric.

The essential features of the radium-type vacuum gage are (1) the vacuum chamber, a brass shell with suitable vacuum-tight insulators and provision for making connection to a vacuum system; (2) the radium source, containing approximately 200 micrograms of radium, sealed to prevent radon loss, and in equilibrium with its immediate decay products; (3) ion-collector electrodes, with a plate electrode being used to produce an electric field for ion collection, and a grid essentially at ground potential to minimize the effect of electrical leakage across the input insulator; (4) a suitable means of measuring the minute ion current produced.

The Roberts high-gain d-c amplifier circuit is used, with a type 954 acorn tube in the first stage. The simplicity of the amplifier depends upon realizing comparatively high voltage gain in the first stage. The second stage is degenerative about 3 to 1, and the over-all gain must be kept up.

It was discovered that the signal could be applied to the control grid on the type 954 and that a low inherent grid current could still be obtained with appreciable gain if a proper value of screen voltage were chosen.

Since the battery drain under the worst conditions can only be 400 microamperes, the life in this application is practically shelf life. Regulated d-c power is supplied to the amplifier.

Sufficient control of the partly limited emission in the first stage is obtained by an ordinary current-regulator tube. To accomplish this, two filament windings are connected to give 11.3 volts alternating current, and this is fed to the 6-4B regulator. The regulator is then loaded with a 10-ohm resistor to provide the operating value of heater supply to the 954. In use, a properly operating regulator overcompensates slightly for changes in line voltages so that the net zero shift is only 1 to 2 per cent on the highest sensitivity scale, in a direction opposite to that of a line-voltage change of 10 volts.

A rotary power switch permits warm-up before operation and ensures that the battery is disconnected in the Off position.

In the 6K5GT second stage, a 0.05-μf capacitor serves to remove the ghost flutter of the output meter needle on highest sensitivity.

A pushbutton operates the ion disconnect relay in the probe so that the amplifier may be zero adjusted by the control provided. Sensitivity ratios of 10 to 1 and 100 to 1 are obtainable with the final control on the front panel. When set to range I (10 mm full scale), this control operates the switching relay to connect a 10^8-ohm input resistor in the 954 grid and simultaneously selects a 3,000-ohm adjustable R_0. On ranges II and III (1.0 and 0.1 mm full scale) the value of R_1 is 10^{10} ohms, while 25,000-ohm and 3,000-ohm potentiometers, respectively, are used for R_0. These variables are necessary to allow for manufacturing tolerances in R_1 and in the radium sources. They are adjusted under operating conditions to read the gage in ion current as air pressure directly.

The fourth range is obtainable by using the R_0 value for range II with a value of 10^8 ohms for R_1. A switch on the rear of the chassis operates the switching relay for this function, and is also used while adjusting for the proper value of screen-grid voltage.

Another switch operates the disconnect relay, making it unnecessary to hold the zero-set pushbutton depressed during adjustment procedures. Finally, two more controls, a coarse zero adjustment and a screen-grid-voltage adjustment, complete this flexible amplifier.

Glenn L. Mellen, Radium-type Vacuum Gage, *Electronics*, April, 1946, p. 142.

Crystal-driven Signal Chopper for D-C Amplifiers

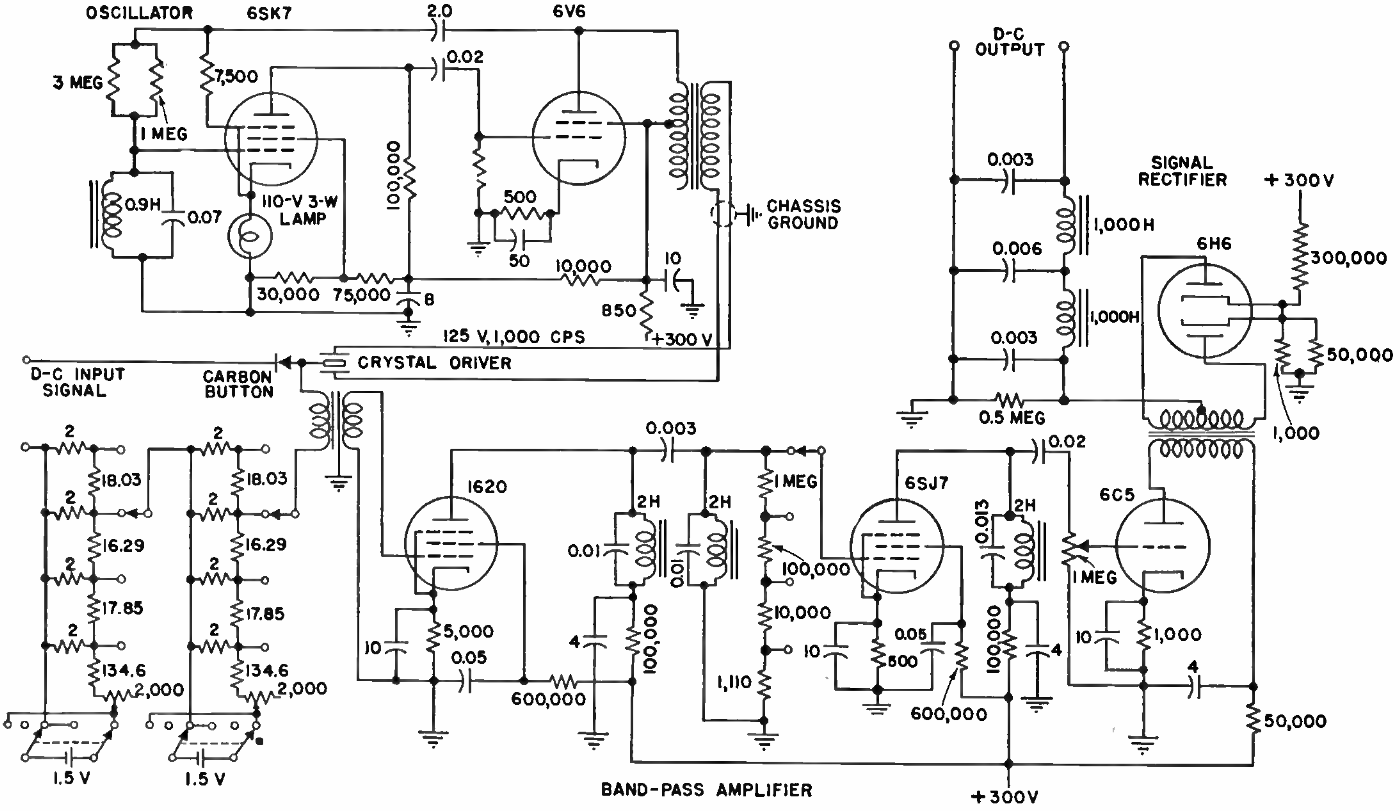

One solution to the problem of drift of the zero-signal point in a sensitive d-c amplifier due to unavoidable changes in supply voltages, circuit constants, and tube characteristics is to impress the d-c signal on a high-frequency a-c signal in such a manner that the resultant amplitude of the combination signal is proportional to the instantaneous value of the incoming d-c signal. The modulated signal is then amplified and rectified at high level to obtain a d-c voltage or current proportional to the original d-c signal.

The circuit for achieving this uses a carbon-microphone button mechanically coupled to a Rochelle salt crystal that receives excitation from a 1,000-cycle oscillator. Constant oscillator output is obtained by use of a 3-watt tungsten lamp in the cathode of the first stage. The d-c signal to be amplified is applied to the input transformer through the carbon button. Conversion of the d-c input to an a-c signal is accomplished by the carbon button due to the continuous vibration of the Rochelle salt crystal to which the button is mechanically coupled. This action results in a loss in signal of about 3 to 1 between the d-c input and the primary of the input transformer. A step-up ratio in the transformer of about 30 to 1 compensates for this loss and results in an over-all gain of approximately 10 to 1 between the d-c input terminals and the grid of the first tube.

The calibration system consists of a ladder network supplied by a 1.5-volt battery, with a switch for reversing the polarity. The calibrating voltage appears across a 2-ohm resistance in series with the input, and it is continuously adjustable over the entire range of the amplifier. A duplicate calibration system may be used as shown to balance out any steady d-c potential that may be present in the input.

The a-c signal resulting from the action of the converter is amplified by a three-stage band-pass amplifier. The response of the amplifier used is flat within ±0.5 db from 900 to 1,100 cycles, making possible observation or recording of signals from 0 to 100 cycles. This pass band might be extended if a higher frequency response were desired. The carrier signal is effectively eliminated by a low-pass filter having a cutoff frequency of 150 cycles and an attenuation of 70 db at 1,000 cycles. The output filter operates into a 500,000-ohm load. A gain control and step attenuator are included in the amplifier, to provide for a wide range of input levels.

The instrument was used satisfactorily in making field measurements of signals ranging in level from 2 microvolts to 30 millivolts and varying in frequency from 0 to 100 cycles. No zero shift was observed.

For use on the high-sensitivity range, it was found necessary that the input tube and the crystal driver be properly cushioned to prevent microphonics and that adequate shielding be employed.

James A. Williams, Crystal-driven Modulator for D-C Amplifiers, *Electronics*, December, 1945, p. 128.

Direct-current Amplifier for Lie-detection Applications

In the psychogalvanometric circuit illustrated, the resistance between two electrodes pressed against the skin of a person forms one arm of a low-voltage bridge circuit that is normally adjusted to balance, and the two-stage direct-coupled amplifier detects the amount of unbalance caused by changes in the resistance of the skin during questioning. Rheostat R_2 is used to adjust the voltage applied to the electrodes, while R_1 serves merely as a comparison resistor used to simulate an external electrode circuit during adjustments. The screen voltage of the first tube should be adjusted so that the milliammeter in the plate circuit of the output stage goes to zero when the input circuit is opened. A voltage stabilizer across a portion of the power-supply voltage divider reduces degeneration. Sensitivity is sufficient to produce 0.01-ampere changes in output current during the emotional change accompanying the telling of falsehood by an average person.

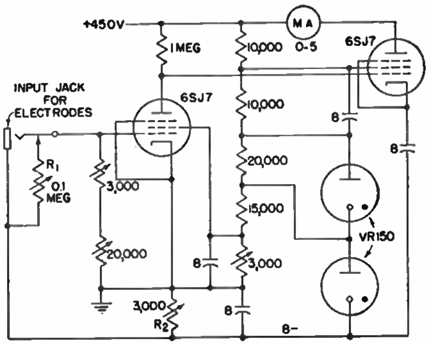

Electronic Aids in the Biological Sciences, *Electronic Industries*, August, 1943, p. 86.

ELECTRONIC SWITCHING CIRCUITS

Electronic Contactor Operating from Radio-frequency Carrier Signal on Power Line

A cold-cathode tube here responds to the presence of an r-f carrier signal on a power line to cause relay operation. Resistors R_1 and R_2 are proportioned so that the igniter electrode will normally be maintained below its firing potential. The control contacts S_1, when closed, raise the igniter potential by means of paralleling resistor R_3 and fire the tube. A relay current of 25 ma is usually maximum for this type of tube.

As soon as the control contacts are opened, the igniter is returned to its original potential, and the tube will cease firing on the first a-c supply cycle that makes the anode of the tube negative to the cathode. In all relay circuits where alternating current is used and the tube acts as a half-wave rectifier, the relay is subjected to half-wave pulses and must either be a fully shaded pole a-c type or must be paralleled with a suitable filter capacitor to smooth out the half-wave pulses and prevent chattering.

A 110-volt a-c supply being assumed, the peak anode-cathode voltage would be 154 peak volts and the igniter electrode should be maintained at approximately 60 peak volts to prevent firing. To ensure ignition for run-of-the-mill tubes, this potential should be raised to 90 peak volts when control contacts S_1 are closed. If R_1 is 150,000 ohms and R_2 is 100,000 ohms, the additional current required through R_2 to raise the igniter to the firing potential of 90 peak volts will be 0.0003 ampere. This additional current would be obtained through resistor R_3 and would have to pass through control contacts S_1.

Increasing the values of resistors R_1 and R_2 would reduce the control-current requirements proportionally, but their values cannot be made too large because the igniter current required to fire the tube is appreciable (approximately 100 microamperes), and an excessive voltage drop through R_1, when the tube fired, would cause unstable operation. To supply the 0.0003-ampere control current, R_3 would require a value of 413,333 ohms. Disadvantages are the necessity for handling rather high potentials in the control circuit and the limitation of the relay current to 25 milliamperes.

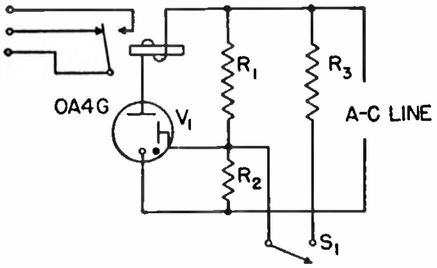

W. D. Macgeorge, Electronic Contactors for Control Applications, *Electronics*, April, 1946, p. 186.

Cold-cathode Circuit for Switching with R-F Carrier Current

Addition of a tuned circuit to a conventional cold-cathode gas-triode circuit provides a r-f-controlled relay having many practical uses. The high-Q tuned r-f circuit formed by L and C is designed to resonate at the carrier frequency employed, the carrier here being applied to the a-c power line so that this control unit can be plugged into a wall outlet anywhere in a building to pick up the control signal.

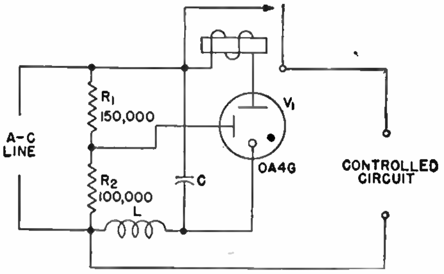

With no radio-frequency signal, the igniter is maintained below its firing potential by the voltage divider R_1-R_2; if an r-f carrier of the proper frequency appears across the line terminals, an r-f voltage will appear across L and supplement the existing igniter cathode potential sufficiently to fire the tube.

W. D. Macgeorge, Electronic Contactors for Control Applications, *Electronics*, April, 1946, p. 186.

Hot-cathode Thyratron Circuit for Use as Electronic Contactor

Microamperes applied to the input of this simple circuit can control amperes of current at the relay contacts, with ample current available for relay operation. The smaller thyratrons can easily supply 100 milliamperes, and more relay current can be had by using larger tubes, such as the RCA 3D22 rated at 0.75 ampere.

Bias is supplied to the grid by the 6.3-volt filament transformer T_1, and prevents the tube from firing. When control contacts S_1 are closed, the grid is returned to the cathode, the bias is removed, and the tube will fire.

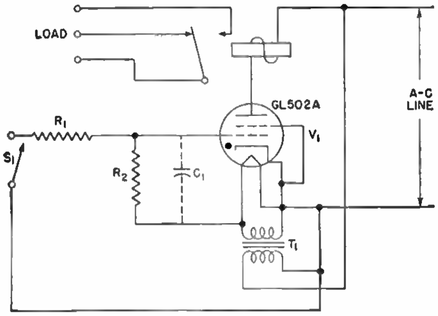

The rms current flowing through the control contacts is given by the expression 6.3 volts/$(R_1 + R_2)$. If we assign a value of 2 megohms to $R_1 + R_2$, the control current will be $6.3/2 \times 10^6$, or 3.15 microamperes. Even lower currents are possible under certain conditions.

Resistor R_1 is placed in series with the grid to prevent any possible damage to this element due to the accidental connecting of a large external voltage source to contacts S_1. A value of 50,000 ohms is usually adequate.

Capacitor C_1, shown in dotted lines, may be connected across R_2 to improve the phasing of the circuit and to enhance its snap-acting qualities. The addition of C_1, although its value is usually quite small, will increase the control-current requirements slightly. A capacitance value of 0.001 μf in parallel with a 2-megohm value of R_2 would permit a control current of 3.9 microamperes to flow if the bias supply has a potential of 6.3 volts.

The circuit has one disadvantage. If its installation is not properly supervised, a short circuit or high grid potential may result. This difficulty results from the fact that one of the control contacts is connected directly to the supply line, and if the other one becomes grounded trouble may result. To avoid this difficulty, a transformer may be used for isolation from the a-c line.

W. D. Macgeorge, Electronic Contactors for Control Applications, *Electronics*, April, 1946, p. 186.

Universal Electronic Relay for Control Applications

This triode amplifier circuit can be inserted between a sensitive contact-making device and a power relay handling up to 1,000-watt inductive loads or up to 1,800-watt noninductive loads. It will operate from either 115-volt a-c or d-c lines; it draws less than 30 watts of power and is designed for extreme flexibility and simplicity in industrial and other applications.

The control circuit functions at a maximum potential of 6.5 volts, minimizing erratic operation due to capacitance between leads or due to dampness of insulation on the input leads. One control terminal and one load terminal are at ground potential when the load relay is open, if the line-cord plug is inserted in the wall outlet in such a way that the pilot lamp does not light. Sensitivity may be adjusted over wide limits by substituting a rheostat for the 50,000-ohm resistor in the input circuit.

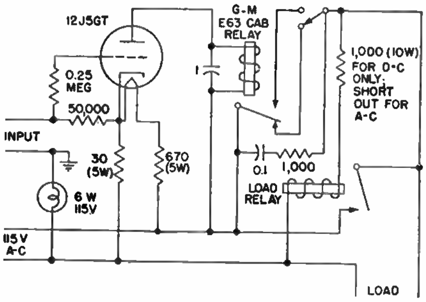

Lester F. Boss, Universal Electronic Relay, *Electronics*, May, 1942, p. 68.

Trigger Circuit and Two-path Amplifier for Electronic Switching

Electronic switching is provided here by a vacuum-tube trigger circuit connected to a two-path amplifier in such a manner that one or the other amplifier tube is rendered inoperative by the high biasing voltage obtained from the plate resistors of the trigger tubes and applied to one grid of the amplifier tube. If the triggering impulse is obtained from the sweep oscillator, the circuit is triggered during each return sweep of the fluorescent spot. The two amplifier tubes thus amplify during alternate sweeps, and the signal voltages are traced on the screen during alternate sweeps.

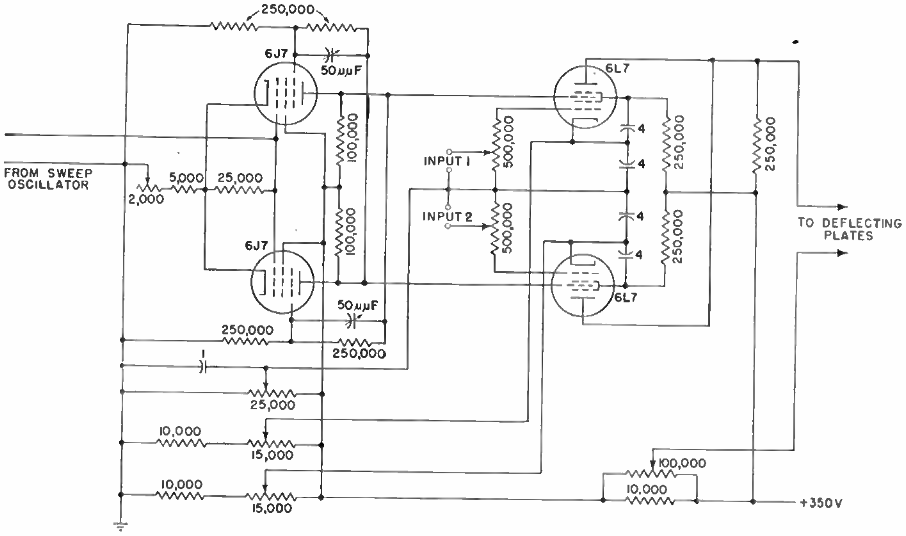

Herbert J. Reich, An Electronic Switch for the Simultaneous Observation of Two Waves with the Cathode-ray Oscillograph, *Rev. Sci. Instruments*, April, 1941, abstracted in *Electronics*, July, 1941, p. 75.

Two-thyratron Gate Circuit for Electronic Counters

Two thyratrons here provide a simple electronic switching circuit by means of which a succession of pulses derived from a given circuit may be used to turn an amplifier stage on and off in any application where pulses are to cause sequential operation of another circuit. In the particular application presented here, the amplifier, or gating circuit, is placed between an oscillator and an electronic counter of a chronograph used for measuring the time of flight of projectiles between two solenoids. Passage of the magnetized projectile through the first solenoid produces the initiating pulse that unblocks the amplifier, allowing a 100-kc crystal-controlled oscillator to feed the counter. Passage of the projectile through the second solenoid produces the terminating pulse that blocks the amplifier, stopping the counter at a number from which the velocity of the projectile can be determined.

The pulses employed for gating must be suitably altered in shape by a wave-shaping network that ordinarily includes a series of amplifier stages, a clipping circuit, and a differentiating circuit. The first pulse from the shaper with a +30-volt positive crest ignites thyratron T_1, the control grid of which is biased to -30 volts, but fails to ignite thyratron T_2, whose grid potential is -82 volts. When T_1 fires, its cathode potential jumps to $+73$ volts, which after a time delay through R_3 and C_3 biases the grid of T_2 to -32 volts so that the second pulse of $+30$ volts from the shaper can ignite the second tube. Voltages before T_1 fires are indicated in parentheses, voltages after T_1 fires are in boxes, and voltages after both T_1 and T_2 have fired are in brackets.

Tubes T_1 and T_2 are gas thyratrons, such as type 2050 or type 2051, that, once fired, continue to glow until plate voltage is removed by opening the reset switch. The neon lamp indicates the condition of the circuit by glowing when the circuit is reset and is ready to function.

The conditions at the grid of vacuum tube T_3 are such that, before T_1 has ignited and after T_2 is ignited, the voltage is sufficiently negative to prevent amplification in T_3. When T_1 has ignited but before T_2 has ignited, the grid voltage is sufficiently positive to permit amplification. R_3 and C_3 should be designed to give the desired delay so that the control grid of T_2 will become armed, or ready to be operated, after the proper time interval.

In the case of the chronographs used for measuring time of flight of projectiles, a preferred coil spacing is, say, 30 feet, so that a 3,000-foot per second velocity will exhibit a time of flight of 0.01 second, or 1,000 cycles of the 100-kc oscillator. The arming time under this condition should be about 0.001 second; therefore values of R_3 and C_3 should yield a time-constant product of $R_3C_3 = 1{,}000$ microseconds.

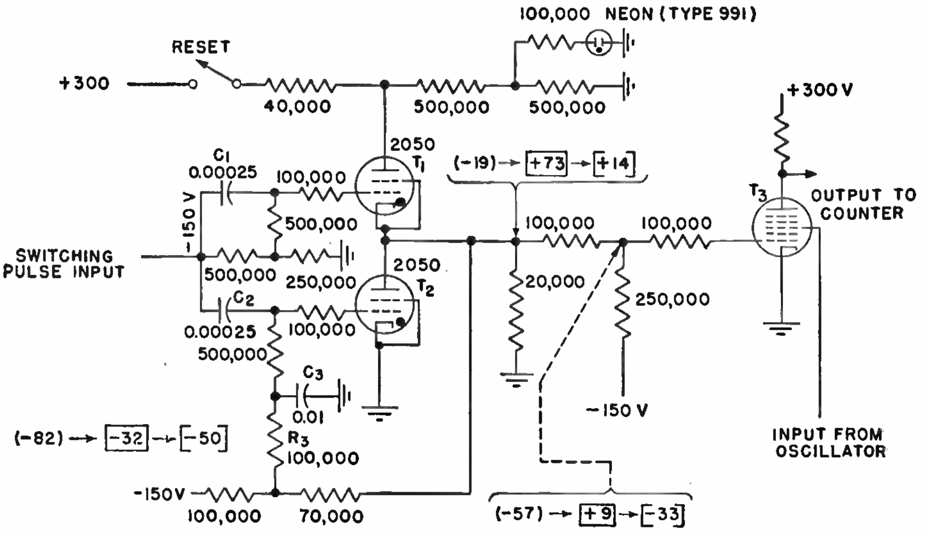

Capacitors C_1 and C_2 may be any suitable size, depending upon the shape of the pulse.

L. B. Tooley, Gate Circuit for Chronographs, *Electronics*, May, 1946, p. 144.

Thyratron Booster Circuit for Sensitive-contact Applications

WHERE irregularities in the operation of equipment are due to surface corrosion films on critical contacting surfaces, this booster-relay thyratron circuit can be used advantageously. The transformer, rectifier, and filter provide a steadier operating condition for the thyratrons than could be obtained with a straight a-c operation. Shorting of the three input terminals by an object moving under them, such as a metal float moving under wire-contact fingers on a waterway, grounds the grids of the thyratrons and thereby makes them conducting, operating the relays and causing corresponding positive connections between output leads.

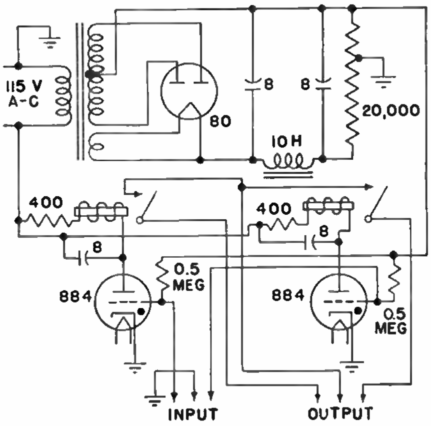

Eugene H. Woodman, Electronics Aids Waterway Development, *Electronics*, September, 1945, p. 120.

Carrier-actuated Relay for Automatic Relay Transmitters and Alarms

WHEN connected to the grid of the squelch tube in an f-m receiver or to an appropriate point in any other receiver, this simple double-triode electronic switch will pull in the relay when a signal is received. The relay contacts can be connected to control an alarm bell and indicator lights, to turn on an automatic relay transmitter, or to turn on any other circuit or device that is to be controlled as a function of a received signal. Basically the circuit is a two-stage d-c amplifier.

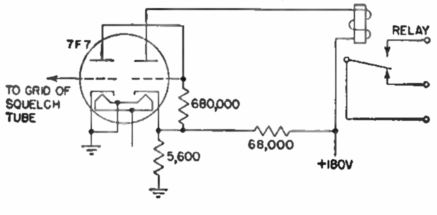

Motorola Installation Instructions for Relay Receiver Adapter Kit, Model K-8348.

Strobotron Circuit for Starting Mercury-arc Rectifiers and Ignitrons

A SATISFACTORY method for starting mercury-arc rectifier tubes in such applications as half-wave welding circuits, shown here, uses a strobotron cold-cathode gas-filled control tube in conjunction with a spark coil to start the main discharge by impressing a high potential momentarily on the external starter band of the rectifier tube.

A 3-μf capacitor is quickly discharged into the spark coil at the instant that the potential on the inner grid of the strobotron reaches its critical value. The high voltage from the spark coil starts a cathode spot at the junction of the mercury and the glass. At the end of the half cycle the tube goes completely out but is restarted at the desired portion of the next cycle by another surge of voltage from the strobotron circuit. The phase-shift method of controlling the output is effected by varying the phase of the tripping voltage with respect to the applied plate voltage on the mercury-arc tube. This same type of circuit has also been used for starting ignitrons.

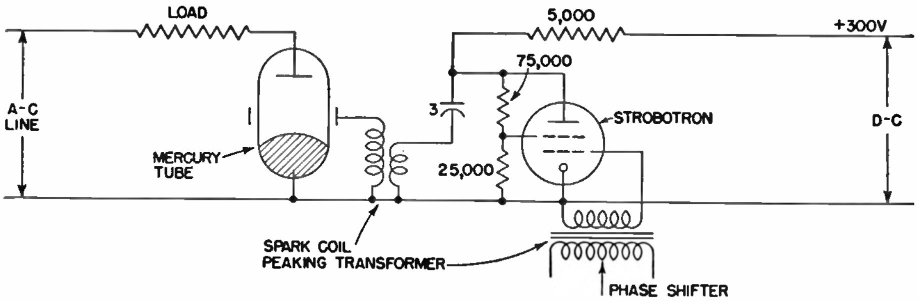

K. J. Germeshausen and H. E. Edgerton, The Strobotron, *Electronics*, February, 1937, p. 12.

Electronic Switch Using Voltage-saturated Diodes for Square-wave Generation

This circuit is in effect a medium-speed single-pole double-throw switch that alternately connects two independent voltages to the input of a single-beam cathode-ray oscilloscope. In each of these switches a square wave is applied to the cathodes of two high-mu pentodes, biasing them beyond cutoff on alternate half cycles.

The independent input voltages are applied to the control grids and the output is taken from the common plate connection. A high-voltage transformer connects to the plates of two diodes that are run at reduced heater current to secure voltage saturation.

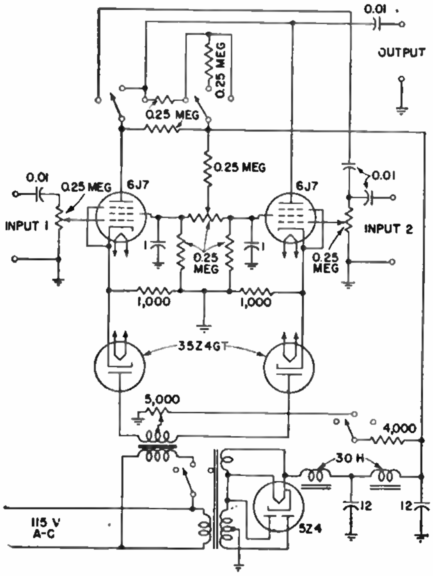

H. K. Hughes and R. F. Koch, Combination Vacuum Tube Switch for Double-trace Cathode-ray Oscillograph, Audio Amplifier and Mixer, *Rev. Sci. Instruments*, April, 1941, abstracted in *Electronics*, July, 1941, p. 75.

Strobotron Circuit for Registering Pulses from G-M Tube on Message Counter

In this counting circuit, the sudden-discharge characteristics of a strobotron cold-cathode gas-filled control tube are utilized to actuate a W-E type 5T message-register counter to provide positive recording of pulses from a Geiger-Müller tube. The counter is actuated when the 2-μf capacitor is charged from the transformer through the type-80 tube. Tests show that the capacitor is fully charged in 1½ or 2 cycles of the 60-cycle supply, and the ballistic effect of the force resulting from this charging-current surge in the recorder causes it to register. The steady current to the amplifier is not enough to hold the counter in a closed position.

A negative surge on the grid of the amplifier tube causes the plate voltage and thereby the outer grid voltage of the strobotron to increase to the critical value at which the strobotron starts. Once a glow is started, it immediately transfers into an arc and discharges the 2-μf capacitor to almost zero voltage. A count is recorded when the capacitor is again charged from the rectifier and transformer.

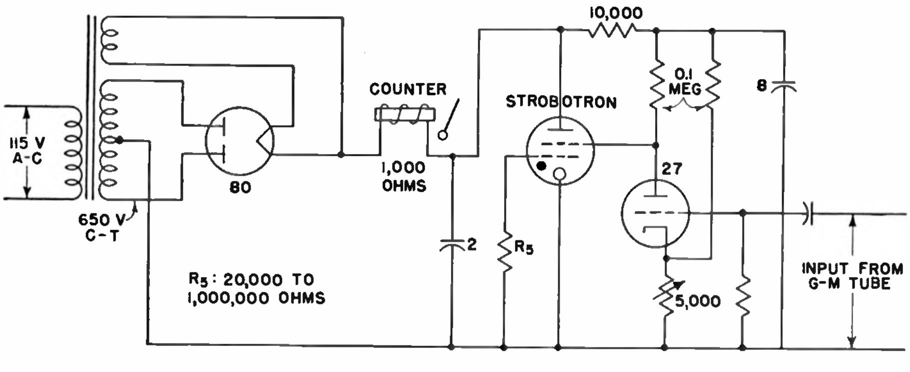

Sensitivity control is effected by the adjustable resistance. This resistor is increased to as large a value as can be used without the self-operation of the strobotron. The drop across the amplifier tube is used as a positive bias for the strobotron, and the larger it is, the smaller the surge will need to be to reach the critical potential at which the tube starts.

Counting speed is determined by the counter, being about ten a second with the W-E type 5T. With higher speed counters the same type of circuit can be used, utilizing if necessary a d-c source instead of the rectified a-c supply.

K. J. Germeshausen and H. E. Edgerton, The Strobotron, *Electronics*, February, 1937, p. 12.

Multivibrator and Shaper Circuits for Electronic Switching of Cathode-ray Tube

A 6N7 tube connected as a multivibrator here has its output applied to two 6F5 tubes that produce a more nearly perfect square wave with sufficiently high amplitude for electronic switching to permit simultaneous viewing of two different voltages on the screen of a single-beam cathode-ray tube. The square wave acts as the switching potential and is applied to the first grids of the two 6L7 tubes. The phenomena to be observed are applied to the third grids of the two 6L7 tubes, and the outputs of these tubes are applied to the vertical deflection terminals of the cathode-ray oscilloscope.

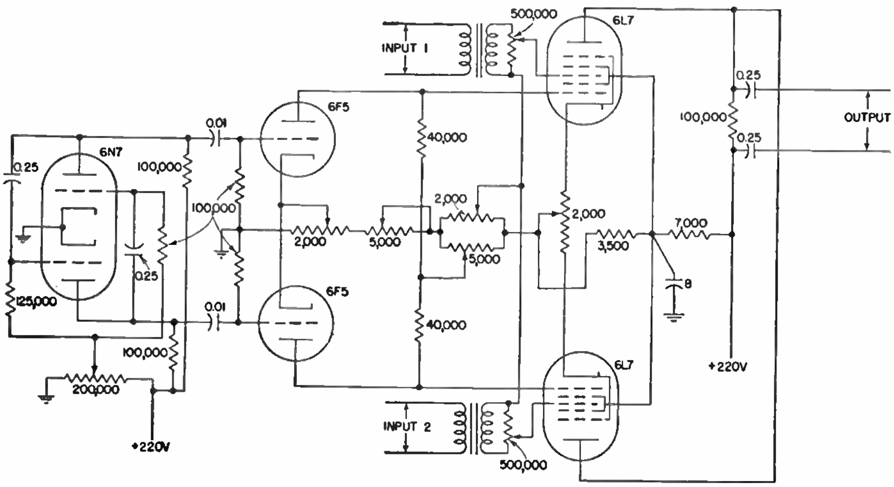

J. R. Cosby and C. W. Lampson, An Electronic Switch and Square Wave Oscillator, *Rev. Sci. Instruments*, April, 1941, abstracted in *Electronics*, July, 1941.

Multivibrator for Switching Two R-F Circuits Automatically between Two Indicators

A TWIN-PENTODE multivibrator here serves both as an r-f amplifier and an automatic electronic switch for feeding two r-f circuits alternately into a common indicator for direction finding and similar applications.

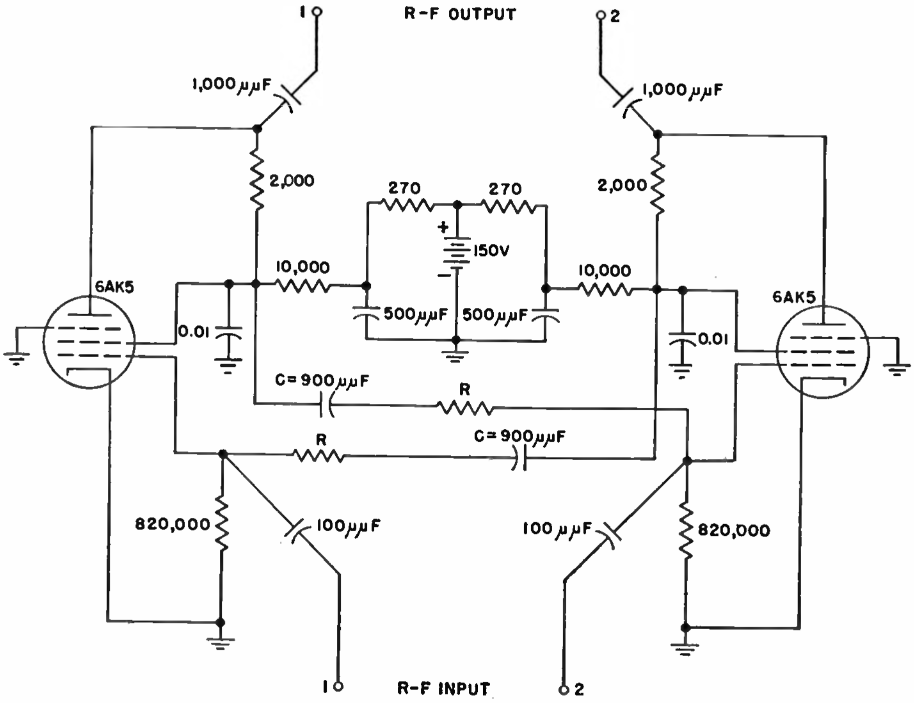

The tubes function both as an amplifier for radio frequencies in the range from 20 to 60 megacycles per second and as an a-f generator at approximately 200 cycles per second. The circuit appears similar to that of a conventional r-f amplifier. However, in contrast to regular r-f amplifiers having fixed operating potentials, the amplification here is accompanied by cyclical changes in bias and operating potentials imposed by the voltages of multivibration.

A resistor *R* in series with capacitor *C* forms the audio-feedback path between the plate screen of each tube and the grid of the other tube. This resistor serves the dual purpose of preventing r-f coupling between tubes and of limiting the d-c grid current. Its value has an important effect both on the multivibrator wave shape and on the input impedance of the switch. If r-f decoupling were the only consideration, a choke might be used in place of this resistor. A bypass capacitor from the screen grid to ground is needed for r-f amplification but tends to reduce the sharpness of the square-wave multivibrator voltages. The capacitor used should be large enough to provide r-f bypassing but small enough to maintain square-wave sharpness.

Grid-voltage limiting action tends to maintain nearly zero bias on the grid during the conducting period. During the conducting period the input resistance of the control grid is low in comparison with the current-limiting resistance *R*; the grid voltage goes positive only a very small fraction of the voltage applied at the other end of *R*. It is desirable to keep this positive swing as small as possible, both for the sake of the a-f wave form and to minimize r-f input circuit loading that increases with the grid current. The grid current may be determined from the oscillograms that give the voltages at either end of resistor *R*. The peak grid currents are 300 microamperes, 75 microamperes, and 33 microamperes when *R* is 100,000 ohms, 820,000 ohms, and 2 megohms, respectively.

H. M. Wagner and J. F. Herrick, Self-switching R-F Amplifier, *Electronics*, June, 1947, p. 128.

Push-pull Telegraph-repeater Circuit for Driving Polarized Relay

A PAIR of vacuum tubes arranged in push-pull to drive a receiving polarized relay has proved a satisfactory solution to the problem of designing an efficient metallic telegraph-repeater circuit. The duplex line is arranged in bridge fashion with 250-ohm ratio arms, and the driving circuit for the tubes is connected across the pair of ratio arms.

The characteristics of the tube circuit are such that the relay will be operated by a current of the proper value for efficient operation regardless of the value of the current in the loop circuit. A very small line-loop current will result in practically full value of current through the relay windings. A further increase in the line current will but slightly increase the relay current. The effect of this is that the electromechanical relay operates on a square sharply defined signal even though the shape of the signal through the line loop may be rounded and therefore not sharply defined.

The tube circuit for driving the relay is symmetrically arranged so that no bias can result from variations in the supply voltage. Plate voltages are obtained from two small selenium rectifier stacks, each provided with a simple filter.

Each tube has its cathode connected to an input terminal. When the voltage across the input terminals is zero, there will be a small plate current in each tube. The two currents of equal intensity flowing through the two windings of the differentially wound polarized relay will balance out and have no effect on the relay. A small voltage across the input terminals will result, however, in an increase in the plate current in one tube and reduction in the plate current in the other tube. The net effect on the relay will be to make it mark or space as the case may be.

The control grids of the two tubes are connected in the circuit in such a way that an increase in the plate current in one tube and reduction of plate current in the other tube will alter the *IR* drops in the two 500-ohm resistors. The change in the *IR* drops will result in an additional effect on the control grids, which augments or exaggerates the grid control resulting from the voltage applied across the input terminals. In this manner a very small value of input voltage will bring one plate circuit to practically full current value and the other plate circuit to practically zero current. Further increase in the voltage applied across the input terminals will have but little effect on the relay current.

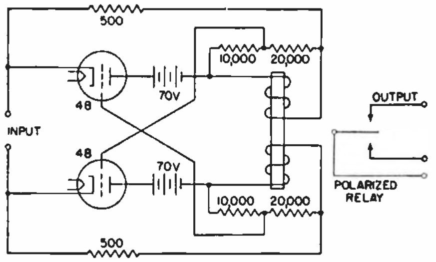

When the grid of one tube is sufficiently negative to bring the plate current to zero, an increase in the negative potential on the grid will still maintain the plate current at zero. The grid of the other tube can never be driven so that it is more than slightly positive with respect to the cathode because of the limiting effect of the resistors in the grid circuit.

The self-inductance of the windings of the polarized relay naturally tends to prevent a quick build-up of current through its windings, and thus will limit the maximum speed at which the metallic circuits may be operated. The self-induced voltage of the relay windings reacts on the tube grids and thus tends to neutralize the relay self-inductance. By means of voltage dividers, two-thirds of the self-induced voltage is applied to the grids. The full amount of the induced voltage is not used, because it would be excessive and the relay would oscillate when the input voltage was small.

Alder F. Connery, Tubes Drive Relay in Telegraph Repeater Circuit, *Electronics*, June, 1943, p. 226.

Variable Length and Rate Pulser for Testing

THIS circuit provides variable pulse length, variable pulse rate, variable delay of synchronizing pip, and a means for introducing a steady-state signal upon which pulses may be superimposed.

A gas-tube *RC* saw-tooth oscillator is used as the rate control. The oscillator output is differentiated and the resulting negative voltage pulses are used to trigger a delay multivibrator and to provide synchronizing pulses for oscilloscope sweep synchronization.

The signal input may be connected for steady, automatic, or hand-key operation by means of a selector switch. With this switch in position 1, the input signal is applied directly through the level potentiometer and the mixer amplifier to the grid of the output cathode follower. This position is incorporated for convenience in observing the nonswitched input signal and, in effect, shorts out the electronic switch.

With the selector switch in position 2, a nonswitched output of any level from zero to maximum may be obtained as in position 1. The output of the switch tubes is added to this in the mixer amplifier. An auxiliary control regulates the maximum amplitude of the switch-tube output. By means of the two controls, any desired relative level of pulsed and nonpulsed signals may be obtained.

In position 3, a hand key may be used to turn the output on and off. The gas-tube *RC* saw-tooth oscillator comprised of V_1, C_1, and R_1 plus the attenuator will be noted in the upper left. In operation, C_1 charges through R_1 and the attenuator until the drop across C_1 reaches the ignition voltage of V_1. Tube V_1 then fires and discharges C_1 through protective resistor R_2 until the extinction voltage of V_1 is attained, after which the above cycle is repeated. The repetition rate is determined by the calibrated attenuator and the intermediate control R_1.

The discharge time constant of R_2C_1 is very much smaller than the charge time constant, so that a saw-tooth oscillator output voltage is obtained. This is differentiated by C_2 and R_3 and the resulting negative voltage pip is used to trigger the delay multivibrator V_{2a} and V_{2b}. The length of the positive delay multivibrator output pulse appearing at the plate of V_{2a} is controlled by the associated capacitor switching system. The front edge of this pulse occurs at the instant V_1 fires and is used for synchronizing.

The delay multivibrator output is differentiated by C_3 and R_4 and the negative voltage pip resulting at the end of the pulse is used to trigger the length multivibrator V_{3a} and V_{3b}. The length of the positive multivibrator output pulse appearing at the plate of V_{3a} is controlled by the associated capacitor switching system. The repetition rate, delay, and length of pulse are all independently adjustable.

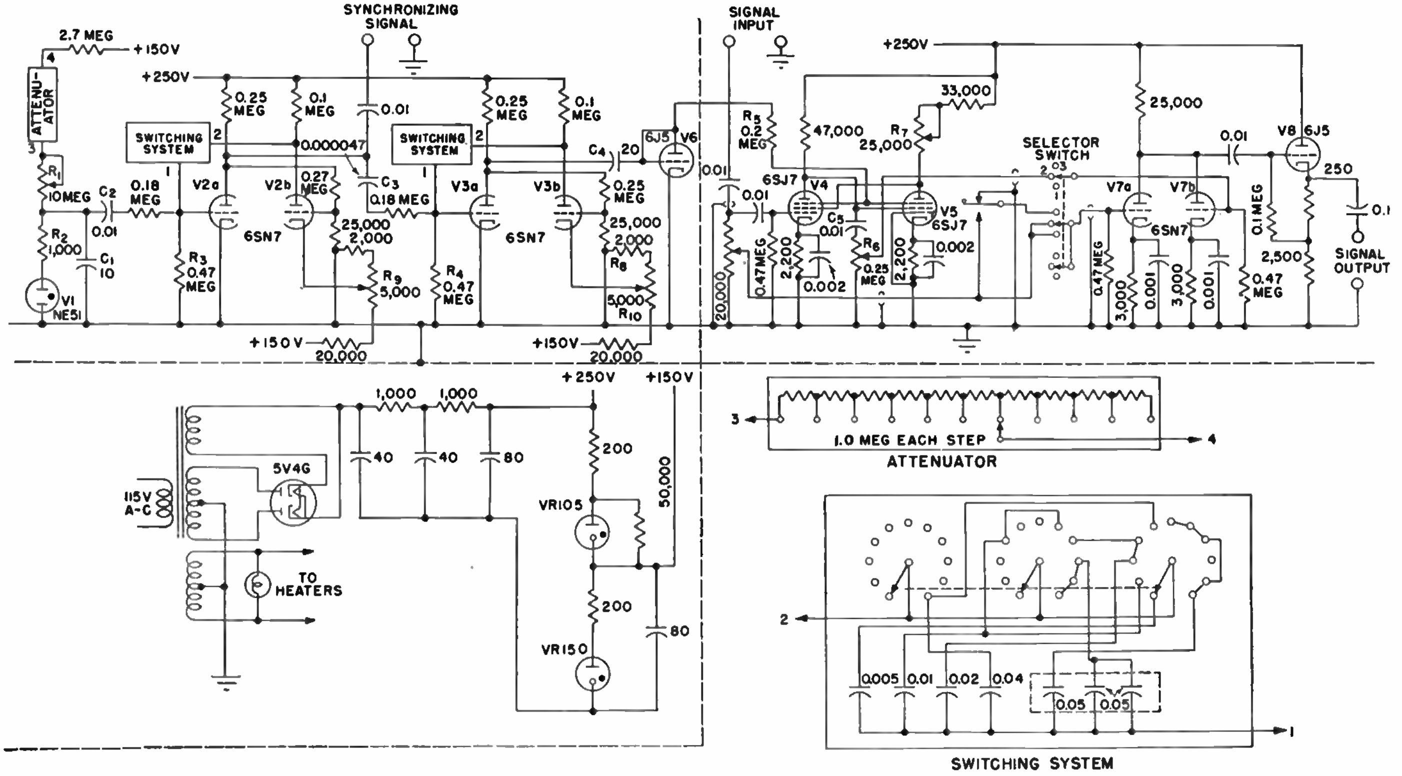

The switching pulses from the length multivibrator are impressed on the suppressor grids of the switch tubes V_5 and V_6 through C_4 and R_5. The output side of C_4 is connected to ground through V_6, which acts as a d-c restorer or charging rectifier. By this means, the suppressors are maintained at a sufficient average negative potential with respect to ground to cut off the switch tubes except during the pulse intervals.

The signal to be pulsed is impressed on the grid of V_4. The output pulses appear at the plate of this tube and are impressed across R_6 through C_5. Resistor R_7 is an adjustable type that is used in initially adjusting the switch for minimum, no-signal, switching transient output.

In the alignment process the device is first turned on and allowed to warm up. The vertical plates of an oscilloscope are connected to the sync-output terminals and the delay multivibrator control R_9 is adjusted until rectangular output pulses are observed on the oscilloscope for all positions of the rate and delay control settings. In addition, it should be noted that the flashing of V_1 occurs simultaneously with the synchronizing pulses. The oscilloscope is then connected to the output terminals and the length multivibrator control R_{10} is adjusted so that symmetrical output pips are obtained for all combinations of rate, delay, and length settings.

After the multivibrators have been adjusted, the switching transient control R_7 in the plate circuit of V_5 is adjusted for minimum no-signal output with an oscilloscope connected to the output terminals.

C. R. Smitley and R. E. Graber, Electronic Switch for the Production of Pulses, *Electronics*, April, 1947, p. 128.

Four-Channel Electronic Switch for Cathode-ray Oscilloscopes

The four-channel electronic switch circuit shown here contains four switching pulse generators arranged as an electronic ring counter for supplying switching pulses consecutively to gate amplifiers 1 to 4, this cycle of operation being continuously repeated at the rate of 25,000 cycles per second. This arrangement permits display of four different transients simultaneously on a conventional cathode-ray oscilloscope screen. The high switching rate minimizes loss of resolution in the wave forms reproduced.

The ring counter comprises a series of square-wave generating circuits of the Eccles-Jordan type so arranged that only one circuit of the series is in the On position at any instant. Trigger pulses applied simultaneously to all the circuits pass this condition consecutively to each square-wave generator, the cycle of operation continuing as long as the trigger pulses are applied.

The On position of a pulse-generating circuit is that state of the circuit from which a positive switching pulse is obtained. A succession of trigger pulses applied to the counter ring results in positive switching pulses being supplied consecutively by circuits 1 to n. This cycle of operation is continuously repeated. Since all gate amplifiers are normally biased beyond cutoff, the function of these positive switching pulses becomes that of turning on the respective gate amplifiers. Any one of the gate circuits is brought into the conducting state for a period of $1/n$ times the switching cycle ($n = 4$ here) and is off during the remaining part of the cycle.

A Pierce oscillator using half of tube V_2 and a 100-kc crystal yields a switching rate of 25,000 cycles. The other half of V_2 serves as a square-wave amplifier for the pulses. Differentiation of the 100-kc square waves is accomplished by the *RC* combination composed of R_4 and C_2. Of the positive and negative pulses resulting, only the positive pulses are amplified by tube V_1, which is biased to cutoff. Negative pulses appearing at the plate of V_1 are applied to a common bus for injection into the ring counter and gate amplifier.

The switching-pulse generator (ring

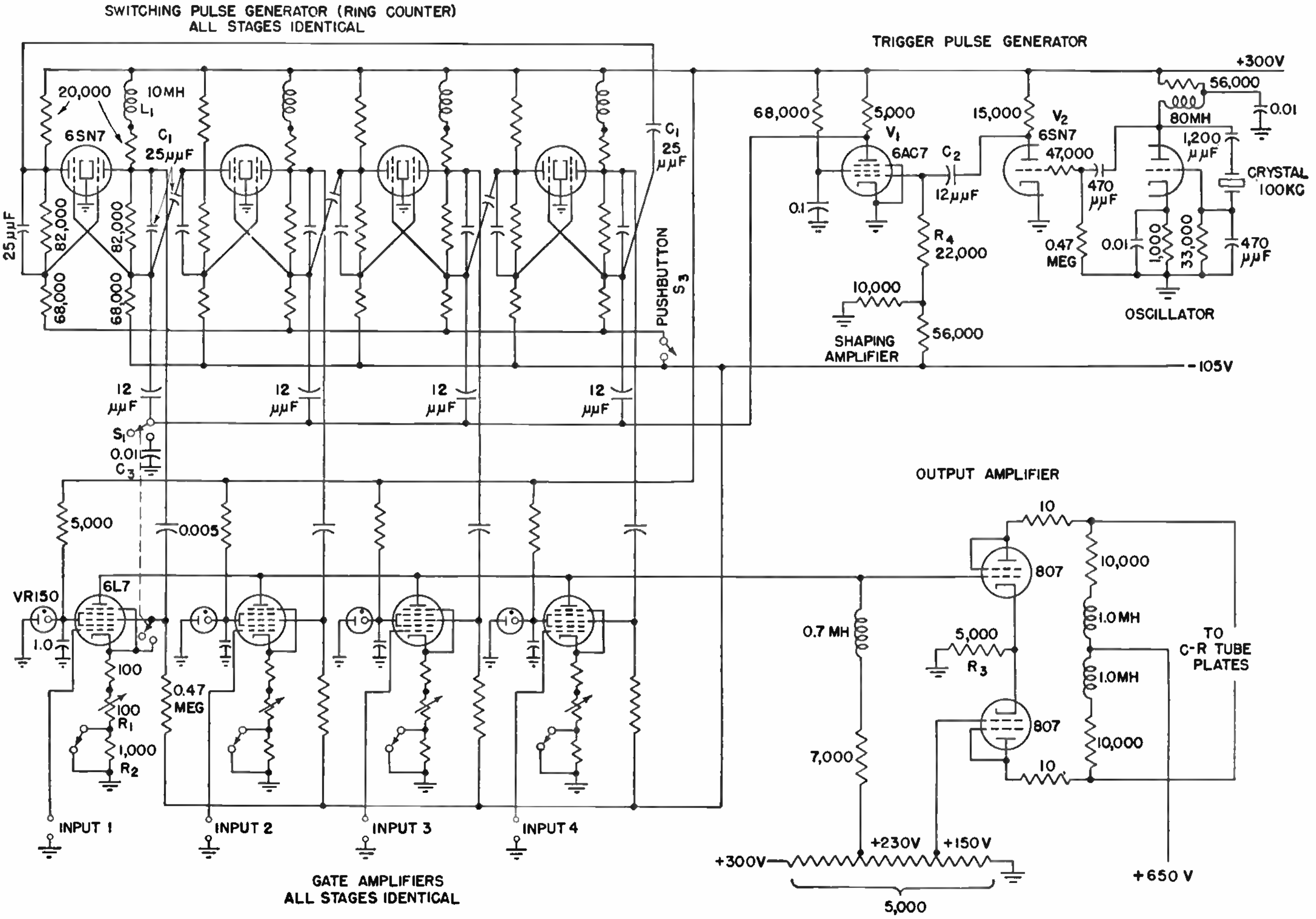

counter) is composed of four 6SN7 tubes connected in standard Eccles-Jordan square-wave circuits, with the addition of inductance L_1 in each plate circuit on that side from which the positive switching pulse is derived. Of those grids in the ring counter that are connected to the source of trigger pulses only one grid is zero at any instant. This grid is associated with the circuit that is on. The trigger pulse operates on this grid and flops the circuit to its other stable state (Off). During this transition the positive rise in voltage at the left-hand plate is applied through C_1 to the cutoff-biased grid of the succeeding circuit, which is then turned on. The next trigger pulse operates on this circuit, which is then flopped to the Off position as in the case of the preceding circuit. In this way, a positive switching pulse is generated at the right-hand plate of each circuit during the sequence off-on-off.

Pushbutton switch S_3, inserted between the two legs of the square-wave circuits, provides a front-panel control for initiating the proper sequence of operation for the counting ring after applying power.

The gate amplifiers serve the twofold purpose of switching and then mixing the signals applied to their respective inputs. The switching pulse is fed to the second grid of each gate amplifier, and the useful signal to the control grid. Incomplete cathode-current cutoff with this arrangement requires isolation of the screen voltage supplies to ensure minimum coupling.

Variable resistor R_1 in the cathode circuit provides a means for orienting the trace on the cathode-ray tube with respect to the other traces. When it is desired to observe less than the four available traces, switch S_2 is thrown. This introduces a large resistor (R_2) into the cathode circuit, which then deflects the respective trace off the screen.

For added flexibility, switch S_1 is provided to restore normal single-trace operation. This shunts the trigger pulses to ground through C_3 and removes the bias on the operating 6L7 tube by connecting its second control grid to cathode.

It was evident early in the development of the apparatus that amplification of the composite signal would present some difficulty. The problem involved is that of amplifying unidirectional square-wave pulses of approximately 75 volts amplitude. These pulses are modulated by as much as 25 per cent. Capacitance coupling could not be used because of the transient d-c amplification requirement. Furthermore, it was found that it introduced interchannel coupling.

The output-amplifier circuit uses triode-connected 807 tubes in push-pull because of their large signal-handling capabilities coupled with low distortion. An excessively large common cathode resistor (R_3) is employed to make the cathode substantially follow the grid, thereby absorbing the large d-c potential at the 6L7 plates and minimizing undesirable grid loading due to the direct connection. Phase inversion is also conveniently provided.

The grid voltage of the phase-inverter tube is established at a point on a voltage divider between $B+$ and ground, and permits orientation of the composite signal on the cathode-ray screen of the DuMont type 5LP5 cathode-ray tube (blue screen) used at the recording medium.

N. A. Moerman, Four-channel Electronic Switch, *Electronics*, April, 1946, p. 150.

LIMITER CIRCUITS

Series Type of Instantaneous Noise-limiter Circuit

For reducing the effects of undesired electrical noise disturbances in a radio receiver, this basic series limiter circuit is highly satisfactory on both c-w and mcw reception, and at the same time it is one of the simplest limiter arrangements in use. It requires only a fixed capacitor, two fixed resistors, and an independent diode in addition to the normal components of a diode second detector. No manual control of limiting action is necessary; it operates only on rapid changes above unmodulated carrier level, and is independent of the absolute value of the unmodulated carrier down to the operating threshold of the limiter diode. It can be operated with or without avc and with or without heterodyne oscillator excitation.

With the limiter switch in the *Off* position, output coupling capacitor C_3 connects conventionally to junction *B* of detector-diode load resistors R_1 and R_2, and the limiter diode has no effect on circuit performance. With the limiter switch *On*, C_3 connects to the cathode of the limiter diode.

Assume a rectified d-c potential of 10 volts developed across R_1 and R_2 by a constant carrier. The cathode of the limiter diode is then -10 volts with respect to ground because of its connection to point *A* through R_3 and R_4, while the limiter plate is about -5 volts to ground. The plate is thus momentarily 5 volts positive with respect to the cathode and the limiter diode becomes conductive, its resistance being fairly low compared with other resistance values in the circuit. Output capacitor C_3 is thereby connected through the conductive diode to its conventional location at junction *B*, so that a constant r-f carrier input provides a-f output. This output is about 45 per cent of what it could be without the limiter, but generally this reduction is of little significance.

Under the above conditions, capacitor C_2 is charged through 1-megohm resistor R_4 to a potential of about -7 volts. Any appreciable change in this potential would require about 0.01 second due to the time constant of R_4C_2. The time constant of $(R_1 + R_2)C_1$ is only about 50 microseconds, however, so that the potential of the plate of the limiter diode can change in about $\frac{1}{200}$ of the time required for its cathode to assume a new potential. Therefore, if a noise potential of say 100 volts suddenly appears across $R_1 + R_2$ and brings the plate of the limiter diode to -50 volts from ground, this makes the diode plate about 43 volts more negative than its cathode and the diode resistance becomes very high. This in effect disconnects output capacitor C_3 from point *B*, and the a-f amplifier has no appreciable input for the duration of the noise signal. By the time that the cathode of the limiter diode has assumed an appreciably more negative potential, the noise pulse will usually have decayed and the limiter diode will have become conductive again, restoring the a-f input to the audio amplifier.

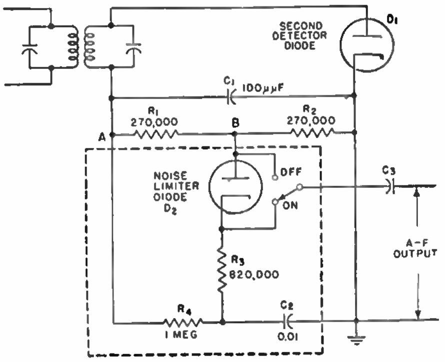

With this limiter, noticeable distortion can be seen on an oscilloscope only above 40 per cent modulation. In listening tests it is difficult to detect distortion by ear on speech and music transmissions maintaining an average modulation level between 30 and 40 per cent, a condition commonly encountered.

Emerick Toth, Noise and Output Limiters, Part I, *Electronics*, November, 1946, p. 114.

Modified Shunt Type of Noise-peak Limiter

This limiter circuit resembles the series-type limiter except that the plate of the limiter diode and the low end of its cathode resistor are interchanged. As a result, the limiter diode acts to reduce the a-f output voltage whenever a noise peak makes the diode conducting. This arrangement permits grounding the low end of the i-f transformer secondary for stability reasons.

Assume a constant carrier making point *E* on the detector diode load 10 volts negative with respect to *A* and ground. Points *B* and *C* are then both -5 volts to ground because the limiter diode is nonconducting, its plate being at the -10 volt potential of *E*. The plate-circuit time constant is much longer than that of the cathode circuit of the limiter, so that any noise surge in excess of 20 volts across the entire detector load drives the cathode of the limiter diode more than 10 volts negative to the ground and the diode conducts, shunting the input to the following a-f stage. The shunting action is made more effective by series cathode resistor R_4, which with the limiter diode closed acts as part of a voltage divider to attenuate detector-load voltage peaks.

Limiting action ceases when *C* becomes positive with respect to *E* due either to decay of the noise pulse or to charging up of C_2. This limiter will begin to cause audio distortion at about 100 per cent modulation for the values shown. If R_2 equals 0.4 R_1, distortion will begin at about 40 per cent modulation. This limiter is much more effective than the simple shunt limiter, but not as good as the simple series limiter at the lower carrier frequencies.

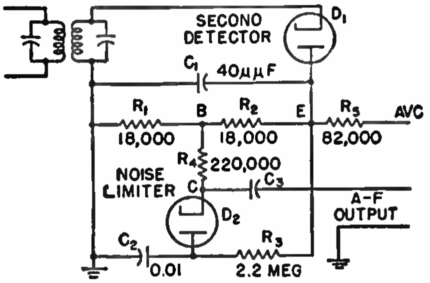

Emerick Toth, Noise and Output Limiters, Part I, *Electronics*, November, 1946, p. 114.

Series Type of Noise Limiter with Threshold Adjustment

By means of potentiometer R_1 in this circuit the limiter threshold can be varied from about 65 per cent modulation down to zero per cent. This control varies the d-c bias due to the rectified carrier at the cathode of the limiter diode, which bias determines the limiting threshold.

The circuit contains a diode shunted across resistor R_3 to buck the residual plate current of the limiter diode, as this current reduces the effectiveness of the limiter at low carrier levels. The d-c voltage built up across R_3 due to rectified direct current from the detector will, together with the time constant of C_3 and the grid resistor in the first a-f stage, tend to maintain this additional diode biased to cutoff except on weak signals. This improvement in weak-signal limiting is accompanied, however, by considerable increase in audio distortion at all useful levels.

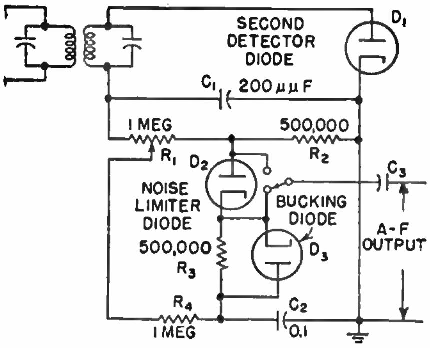

Emerick Toth, Noise and Output Limiters, Part I, *Electronics*, November, 1946, p. 114.

Low-loss Series-type Noise-limiter Circuit

The reversal of cathode and plate connections of the limiter diode in the variation of the series-type limiter shown here necessitates the use of two more resistors and a capacitor (over those required by the simplest form) to provide the required biasing and *RC* delay circuits for the diode elements. It has, however, the advantage of providing the a-f amplifier with a higher percentage of the a-f voltage appearing across the detector diode load. For a comparable degree of modulation distortion, this improved transfer of a-f voltage will amount to about 2 or 3 db, which is usually not of great importance unless the receiver is deficient in reserve gain.

The cathode of limiter diode D_2 is biased negative relative to its plate by connection to the junction of detector-load resistors R_2 and R_3 through resistors R_4 and R_5. R_4C_2 provides a long time-constant circuit, while R_5 serves as the cathode load resistor across which the limiter output voltage is developed. Capacitor C_3 provides a-f coupling to the plate of D_2 for the detector audio-output voltage appearing between the junction of R_1 and R_2 and ground. Resistor R_1 serves only as an r-f filter element.

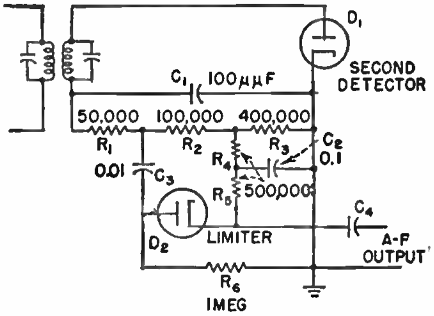

Emerick Toth, Noise and Ouput Limiters, Part I, *Electronics*, November, 1946, p. 114.

Hum-reducing Version of Simple Series Limiter Circuit

The series limiter circuit variation shown will give a reduction on the order of 20 db in hum originating in the limiter. This hum exists because audio signals are taken from a relatively high-value resistance load located in the cathode circuit of the a-c heated diode; with a heater-cathode capacitive reactance of about 500 megohms and a 0.5-megohm resistive load between cathode and ground, about 0.1 per cent of the heater-ground potential will appear across the cathode resistor as hum voltage. For a 6.3-volt heater this would be about 6 millivolts.

In the hum-reducing version the cathode resistor of the a-f amplifier following the limiter is not bypassed to ground. The over-all equivalent circuit is that of a bridge, with e_h as the limiter diode heater voltage and C_{hk} as the heater-cathode capacitance. Equivalent resistance R_e shunting one arm of the bridge is a composite of R_1, R_2, R_4, the effective resistance of D_1, etc. The bridge is completed and balanced by capacitor C_5 connected between the ungrounded side of the heater supply and the cathode of the first a-f stage; with usual limiter circuit components the value of this capacitor is quite low, being 150 $\mu\mu$f in the circuit shown. If a limiter on-off switch is used, two different values of C_5 will be required due to slight changes in bridge configuration when switching from the cathode to the plate of the limiter diode.

This hum-bridge scheme allows normal location and operation of the a-f gain control R_5, permitting reduction of a-f amplifier input substantially to zero despite unbypassed cathode resistor R_7.

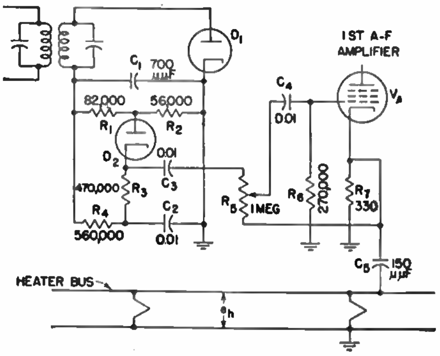

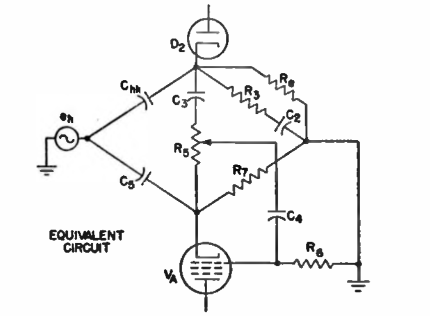

Emerick Toth, Noise and Output Limiters, Part I, *Electronics*, November, 1946, p. 114.

Manually Controlled Balanced-detector Type of Noise-limiter Circuit

This circuit functions as a balanced bridge arrangement for detector voltages above the limiting threshold, with unbalance being maintained at all other times. It must be adjusted manually for each carrier level, but automatic operation can be achieved by adding another diode as in the automatically operated balanced-detector type of noise limiter.

When the contact arm of R_6 is at the grounded end and R_4 is set equal to R_2 (at 47,000 ohms), then R_1, R_2, R_3, and R_4 form a balanced resistance-bridge circuit that is fed from the i-f output through the second detector and noise-limiter diodes. If both diodes rectify in phase and their loads are equal, the a-f output is zero. If the limiter diode is made inoperative by adjusting R_6 to bias its cathode with a positive d-c voltage, the bridge becomes unbalanced and a-f output is obtained when a constant modulated carrier input is present. If, now, a noise peak arrives that exceeds the diode bias, the bridge will be rebalanced and no a-f output will be obtained for the duration of that part of the noise peak which exceeds the diode bias voltage.

The limiter normally is balanced initially by adjusting R_4, and thereafter adjusted for each carrier level and desired modulation threshold by means of panel control R_6. Adjustment of R_6 disturbs the balance of the bridge by varying the resistance of one arm; hence it may be desirable to gang a rheostat with R_6 so as to hold its equivalent resistance constant. For most effective operation, the time constant of $(R_1 + R_2)C_1$ should equal that of $(R_3 + R_4)C_2$ for all settings of R_6, and the capacitances of the two diodes should be equal.

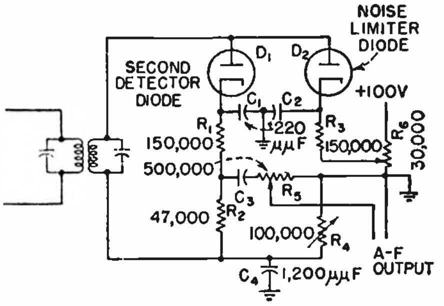

At broadcast frequencies no improvement in receiver performance should be expected with this limiter, as improvement begins to be noticeable above about 10 mc and only for ignition-type interference. The need for adjusting to changing carrier values makes this circuit practically useless on fading signals unless limiter control settings of the type that would cause considerable distortion are tolerable. No appreciable limiting is obtained with c-w reception employing a beat oscillator.

Emerick Toth, Noise and Output Limiters, Part I, *Electronics*, November, 1946, p. 114.

Combination R-F Output Limiter and Noise Limiter

Both r-f output limiting and r-f noise limiting are achieved with this simple circuit arrangment, which is dependent on vacuum-tube plate-current saturation and control-grid cutoff and on maintenance of a high input impedance in the control-grid circuits of the saturated tubes. The third and fourth r-f amplifier stages are used as saturation limiters by operating with 45 volts applied to both screen and plate circuits. The combined effect of the two stages provides the gain of one r-f amplifier stage at a much lower limiting level than is feasible with one stage alone. The single tuned circuit following the fourth stage filters out r-f distortion caused by the preceding limiter circuits and provides further selectivity while the low-pass filter following the detector further purifies the audio output and improves signal-to-noise ratio.

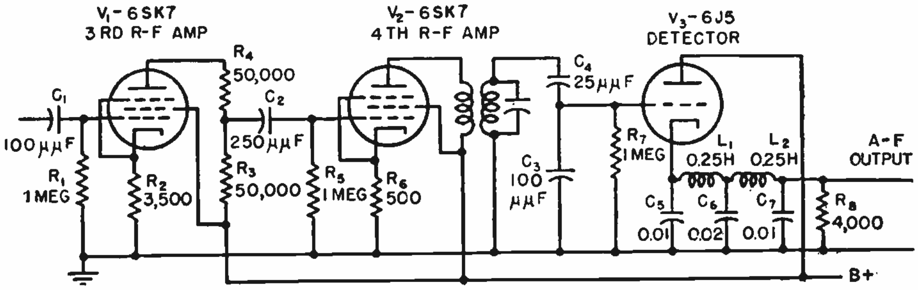

The a-c input resistance of the third r-f amplifier tube is 1 megohm until the applied signal voltage exceeds the negative bias on the control grid, when it drops to 0.5 megohm, because the grid becomes in effect a diode rectifier which is conductive for that portion of the positive half cycle during which the signal exceeds the grid bias. The negative bias thus developed across grid leak R_1 by grid rectification is applied to the control grid to limit the increase in space current. During a noise peak, then, the effective positive instantaneous voltage on the grid is the difference between the rectified voltage across R_1 (maintained by charging C_1) and the positive half-cycle voltage of the noise peak, giving the desired limiting action. On the negative half cycle of r-f input, grid cutoff limits the change in plate current of the tube.

The phase shift from grid to plate circuit results in the positive noise peaks applied to the grid of the third r-f amplifier tube appearing as modified negative peaks at the grid of the fourth r-f amplifier, where they are further limited by grid cutoff, the positive peaks at this point being also limited in the fourth amplifier plate circuit by saturation effects. The combined effect of the two limiter tubes thus is to limit both peaks of applied r-f voltage, whether due to signals or noise peaks.

Conventional bypass capacitors and screen filters are not shown in the circuit. The detector, an infinite-impedance or cathode-follower type, is used primarily for its low output impedance, and it does not provide any limiting action. This saturation-type limiter is useful chiefly for c-w reception at very low carrier frequencies, though with a suitable saturation limit and an exceptionally good avc system controlling preceding r-f gain to just below limiting level on the desired signal, distortion on mcw reception can be kept low over a considerable range of carrier input values.

Emerick Toth, Noise and Output Limiters, Part II, *Electronics*, December, 1946, p. 120.

Automatically Operated Balanced-detector Type of Noise Limiter

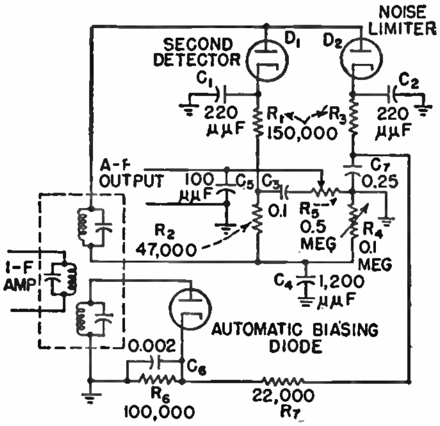

By adding another diode circuit to the manually operated balanced-detector noise limiter, automatic operation of the limiter can be secured, eliminating the need for adjusting a balancing potentiometer with each change in carrier level.

The additional diode is operated from a tertiary winding on the final i-f transformer, as shown here. This diode rectifies the i-f carrier to provide a d-c bias of about twice the mean rectified voltage furnished by the detector diodes, so that limiting does not take place on modulation depths below about 100 per cent. The bias voltage is applied to R_3 at the point where R_6 introduces the bias in the manually controlled circuit. The cathode delay bias on the noise-limiter diode is thus maintained automatically at a constant ratio with respect to the carrier input. The depth of modulation at which audio distortion begins is determined by the ratio of the rectified voltage supplied by the automatic biasing diode to that supplied by the noise-limiter diode.

Emerick Toth, Noise and Output Limiters, Part I, *Electronics*, November, 1946, p. 114.

A Balancing Type of Noise-peak Limiter

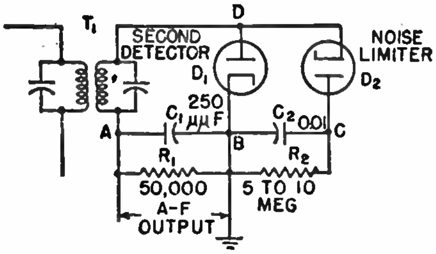

The balancing effect of a diode shunted across the second detector with reversed polarity is used here. When the limiting threshold is passed, as on noise peaks, the variations in the limiter-diode current oppose the normal demodulation current in the second detector.

Assume that an unmodulated carrier produces a rectified potential of 10 volts across second detector-diode load R_1, making point A 10 volts negative with respect to ground. On positive peaks of carrier input, point D will now be close to ground potential because point A remains relatively constant over an r-f cycle and the 10-volt positive r-f peak across the i-f transformer secondary acts to cancel the negative 10 volts at A. On negative peaks, point D will therefore be -20 volts with respect to ground.

The voltage impressed across the noise-limiter diode in series with R_2 will therefore vary between substantially zero and -20 volts at an r-f rate. This builds up a potential of about -20 volts across capacitor C_2, thereby biasing the limiter-diode plate 20 volts negative with respect to ground. The net effect is that the second detector diode is shunted by a high impedance, between about 2.5 to 5 megohms, until such a time as the i-f input voltage increases above the 10-volt value, as on a noise peak or with modulation of the carrier. When this occurs, the limiter diode becomes highly conductive for all portions of the modulated wave having an instantaneous value in excess of 10 volts negative. Since the time constant of R_2C_2 is relatively long, between 0.05 and 0.1 second, C_2 serves mainly as a coupling capacitance to R_1 as regards a-f variations. These variations, being of opposite polarity to those across R_1, will tend to cancel the latter on half the audio cycle. The magnitude of the cancellation effect will depend on the impedance of the limiter diode when conducting, which in turn will depend on the values of the impressed voltages and R_2, so that better cancellation will in general be obtained as R_2 approaches R_1 in value. This would mean increasing C_2, however, to maintain the time constant at the desired magnitude and would increase the a-c loading across R_1 and seriously affect modulation distortion.

The modulation distortion of this type of limiter is quite high, even on relatively low modulation depths, when it is effectively limiting noise peaks. On the other hand, the circuit provides about twice the normally obtainable avc voltage when the d-c potential across R_2 is utilized.

Emerick Toth, Noise and Output Limiters, Part I, *Electronics*, November, 1946, p. 114.

Diode Shunt Type of Noise-peak Limiter

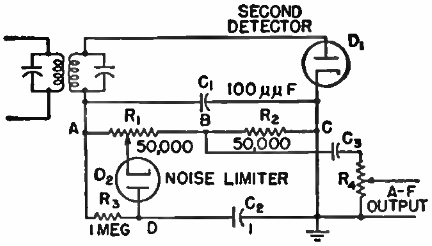

Here is the simplest limiter of them all, requiring only a resistor and a capacitor together with an independent diode.

R_1 and R_2 bypassed by C_1 give the detector-diode load a time constant of about 10 microseconds. The limiter plate-circuit time constant is 1 second, so that the limiter diode conducts and shunts the detector-diode load on noise (and modulation) peaks. During such peaks, the a-f output of the detector is reduced by an amount depending on the value of R_3, the setting of R_1, and the noise peak voltage. The depth of modulation above which distortion begins is determined by the relative values of R_1 and R_2 and by the setting of R_1. The performance is not very good, but some improvement is evident with pulse-type interference on signals above 10 mc.

Emerick Toth, Noise and Output Limiters, Part I, *Electronics*, November, 1946, p. 114.

Triode Shunt Type of Noise-peak Limiter

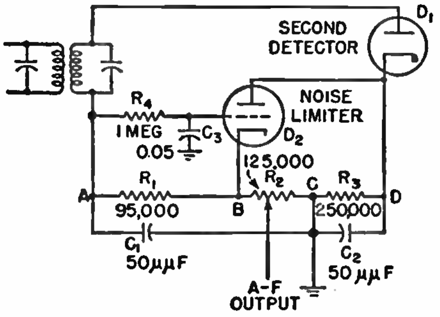

This circuit employs the plate resistance of a triode shunted across a portion of the second detector-diode load. The magnitude of the shunt resistance is controlled by the grid and plate voltages, which act in conjunction with differential time constants.

A carrier input that produces a total rectified voltage of 10 volts across the diode load (between *A* and *D*) being assumed, potentials with respect to the second detector cathode will be −10 volts for *A*, −8 volts for *B*, and −5.3 volts for *C*. The triode plate is thus 8 volts positive to its cathode, while its control grid (connected to *A* through R_4) is 2 volts negative with respect to its cathode. For a triode with a mu of 20 this gives plate-current cutoff, so that the triode impedance is high and it has little shunting effect on the second detector load resistors R_2 and R_3. Now if a 100-volt noise pulse suddenly appears between points *A* and *D*, the triode plate-cathode voltage rises to 80 volts long before the grid potential can change (the plate-circuit time constant is about 12 microseconds, while that of the grid circuit is about 50 milliseconds). The triode thus becomes conductive and shunts section *B-D* of the detector load for the duration of the noise pulse, reducing the audio output from the detector. The noise disturbance will usually subside before the control grid swings sufficiently negative to stop this limiting action.

The percentage of modulation at which audio distortion due to the limiter appears depends upon the type of triode used, the relative values of R_1, R_2 and R_3, the time constants involved, and the absolute carrier level. At low carrier levels distortion can occur for modulation depths as low as 10 per cent, while higher carrier levels give no distortion (and no limiting). Effective limiting action is restricted to a narrow range of carrier input levels, at carrier frequencies above about 10 megacycles.

Emerick Toth, Noise and Output Limiters, Part I, *Electronics*, November, 1946, p. 114.

Countermodulation Type of Noise-reduction Circuit

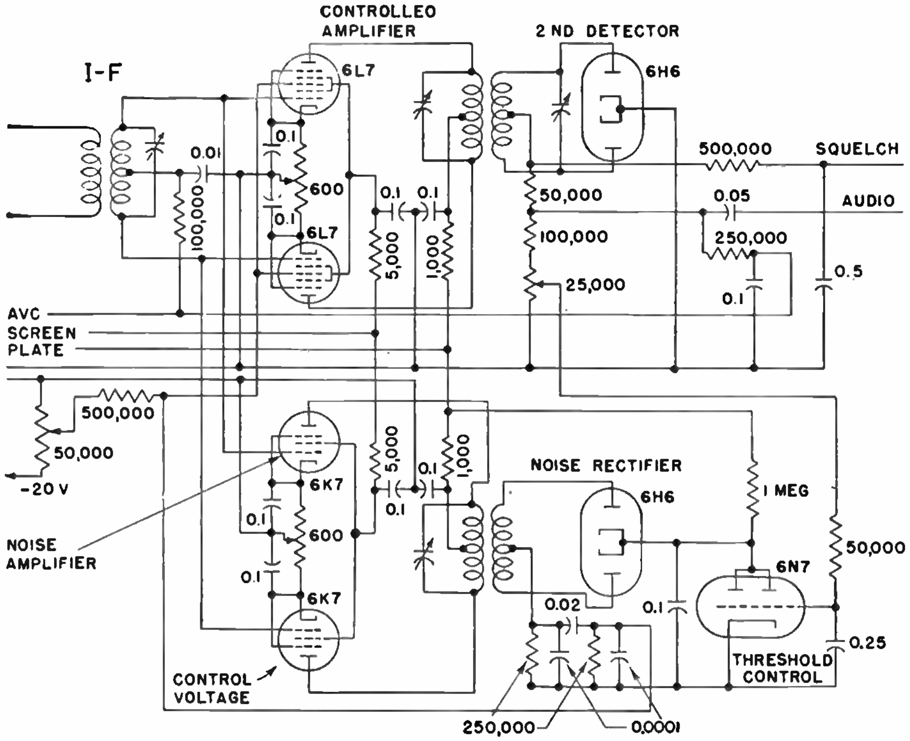

Noise-reducing circuits in general operate on one or more of the following principles: limitation, cancellation, countermodulation, blanking out, and variation of gain. A straightforward circuit using the countermodulation principle at the output of the i-f amplifier is shown here.

Signal and noise voltages at the i-f value of the receiver are fed into a push-pull controlled amplifier stage that is paralleled by a push-pull noise-amplifier stage whose plate circuit is tuned lower than the i-f value, so that there is more noise voltage and less signal voltage at the noise-rectifier input than at the second detector input. If the i-f stages of the receiver are quite broad, the noise amplifier may be detuned enough practically to eliminate signal voltage in this circuit. However, any signal voltage present is prevented from affecting circuit operation by the automatic threshold control tube.

The noise rectifier has a variable-delay bias that is regulated by the threshold control tube, the delay being adjusted so that rectification occurs only above the level of the signal component in the voltage being rectified. The avc voltage fed to the grids of the threshold control tube regulates the delay level with change of signal strength. The a-f voltage representing the noise component is taken from the noise-rectifier load resistor and is fed through a blocking capacitor to the gain-controlling grids of the 6L7 controlled amplifier tubes. A d-c bias voltage is applied to these grids to set the level of the zero axis for the countermodulating voltage. Once the delay and bias adjustments are made, they need not be changed.

Though not especially simple, this circuit is effective and fully automatic. Because it reduces noise voltages before rectification, noise cannot increase avc voltage, and hence receiver gain, noise-rectifier delay, and noise-amplifier gain are all controlled only by the strength of the desired signal. If a squelch circuit is used in the receiver, the squelch can be set much closer to the opening point without noise bursts opening the squelch.

Carlton Wasmansdorff, Reducing Radio Noise, *Electronic Industries*, July, 1944, p. 80.

Degenerative Feedback Type of Noise Limiter

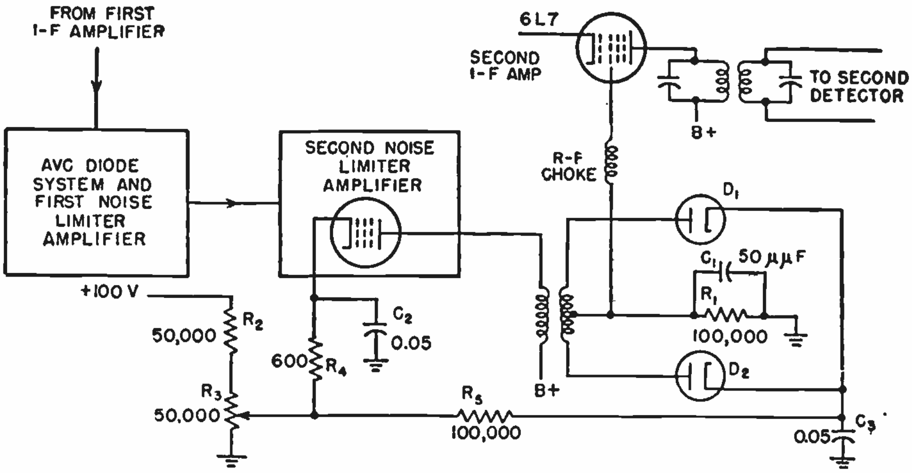

Degenerative feedback in the i-f amplifier prior to final detection is used in this circuit. A portion of the output from the first i-f amplifier is amplified in the first and second noise limiters, and the resulting i-f output is coupled into a full-wave rectifier having R_1 as a load. The d-c voltage developed across R_1 serves as bias for the injector grid of a 6L7 pentode serving as the final i-f stage. Front-panel control R_3 provides a positive delay voltage for the diode cathodes, to prevent rectification until signal or noise peaks exceed this bias. Since the time constant of the diode load is only 5 microseconds, the d-c potential across R_1 can fluctuate at a rate up to about 200 kc.

If the normal carrier peak impressed on the diodes is 10 volts and the delay bias is 5 volts, the diodes do not rectify (since each gets only half the applied voltage), and the 6L7 grid gets no bias. Now if a 100-volt noise peak appears across the secondary of the diode transformer, the delay bias on each diode is exceeded by 45 volts and a negative potential of 45 volts is therefore applied to the 6L7 grid. If this change in injector-grid potential occurs simultaneously with and in opposition to the change in the control-grid potential of the 6L7 due to this noise pulse, the effects of the noise pulse on the second detector can be reduced considerably by the resulting bucking action. Ideal synchronism and balance are usually difficult to achieve, however. This limiter requires manual adjustment of the threshold of operation and is useless on fading signals. Incorporation of automatic biasing from an additional avc system would make for almost prohibitive complexity.

Emerick Toth, Noise and Output Limiters, Part I, *Electronics*, November, 1946, p. 114.

Use of F-M Discriminator for Noise Limiting in A-M Receivers

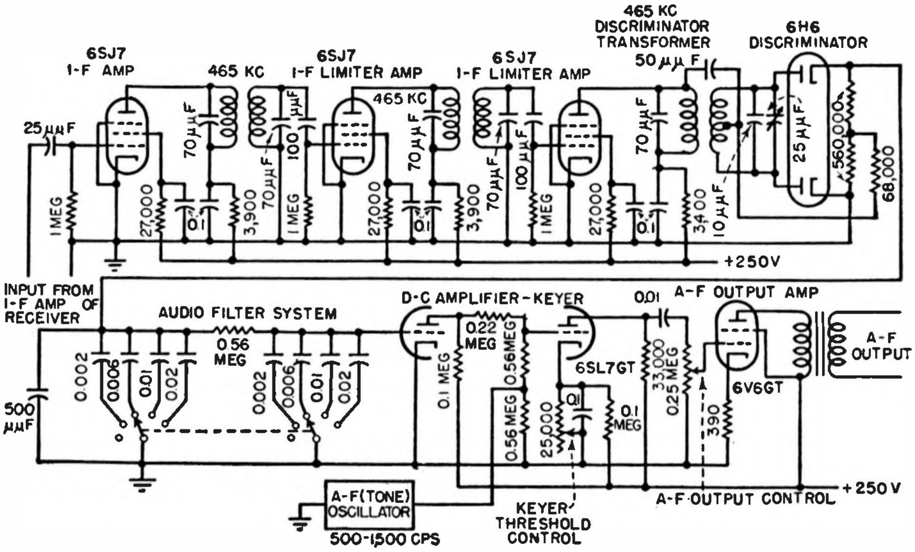

If the discriminator of an f-m receiver is used in place of the second detector in an a-m receiver, as shown here, there will be two peaks of maximum response corresponding to the two points of maximum discriminator current. If the a-m signal is tuned to one of the peaks, a better signal-to-noise ratio is obtained than for an amplitude detector. The noise output of the discriminator is low because the two halves of the discriminator characteristic are the result of the differential voltage derived from two opposing detectors. The reduction in noise is particularly apparent with relatively low modulation frequencies (narrow discriminator characteristic), and especially on keyed c-w signals. At the same time, the useful bandwidth of the over-all selectivity characteristic is reduced to about half of what it would be with the usual a-m detector.

The discriminator here is followed by a low-pass filter cutting off at about 200 or 300 cycles and a d-c amplifier (capable of passing up to these frequencies) which operates a keyer tube controlling a local tone oscillator. Such an arrangement is capable of providing startling performance on keyed c-w signals in the presence of noise interference that would make reception with the usual receiving system, even with noise-peak limiters, absolutely hopeless. The use of the local keyer circuit eliminates one of the two peaks of reception, since the discriminator output polarities are opposite for its two maximum response points and the usual keyer circuit is arranged to respond to one polarity only. This scheme is subject to various disadvantages when adapted to a conventional a-m receiver, such as complexity and rather critical operating adjustments, but within its limitations it has much merit. It bears considerable similarity to receiving systems for frequency-shift keyed signals.

Emerick Toth, Noise and Output Limiters, Part II, *Electronics*, December, 1946, p. 120.

Saturation Type of Audio Output Limiter Using No Extra Tubes

CONTROL of the saturation level of the a-f output pentode tube at various screen, plate, and control-grid voltages provides audio output limiting action here without use of additional tube circuits. A low-pass filter ($L_1C_4C_5$) filters out distortion produced in the output stage; its cutoff frequency is 1,200 cps, and hence for a 1,000-cps tone signal the harmonics will be filtered out to a considerable degree.

The control-grid, screen, and plate voltages in this limiter are varied by a double-pole switch that contacts taps on resistors R_3 and R_4. The voltages thus obtained maintain the gain below saturation fairly constant for all switch settings, while at the same time permitting control of the limiting level. This circuit is useful for c-w reception only. Below limiting threshold, there is a loss in gain of about 3 db over a 20-db range of limiting threshold.

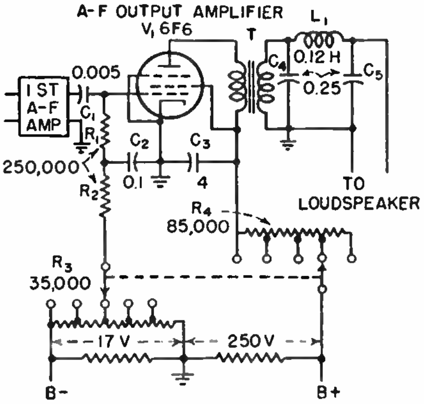

Emerick Toth, Noise and Output Limiters, Part II, *Electronics*, December, 1946, p. 120.

Volume-limiting Feedback Amplifier Using Control Tube in Feedback Path

UNLIKE other electronic limiters where the gain is controlled by a variable-μ tube or a variable attenuator network, the gain is here reduced, when compression begins, by employing a negative feedback circuit in which the percentage of output signal fed back to the input increases with increasing input. This is accomplished by developing a bias in the output circuit of an auxiliary amplifier fed from the input side of the compressor, which is used to control the plate resistance of a tube acting as one of the elements of the feedback circuit. Since the distortion in a negative feedback amplifier is reduced when feedback increases, it will be held down to a low value under compression.

The input stage of the main amplifier is a triode using one section of a 6F8G, the other section acting as the auxiliary amplifier for the 6H6 control rectifier. The input stage is transformer coupled to a push-pull output stage using another 6F8G. Negative feedback is used on this stage. The feedback factor is determined by R_1, R_2, and the plate resistance of a 6L7. When R_1 and R_2 are fixed at suitable values, this feedback factor can be controlled within limits by varying the plate resistance of the 6L7 tubes since they are effectively in parallel with resistors R_1. If the bias on the 6L7 tubes is increased negatively, plate resistances increase, and the feedback factor increases. Since gain decreases as the feedback factor increases, an increasing input signal increasing the bias on the 6L7 tubes will decrease the gain and thus produce compression.

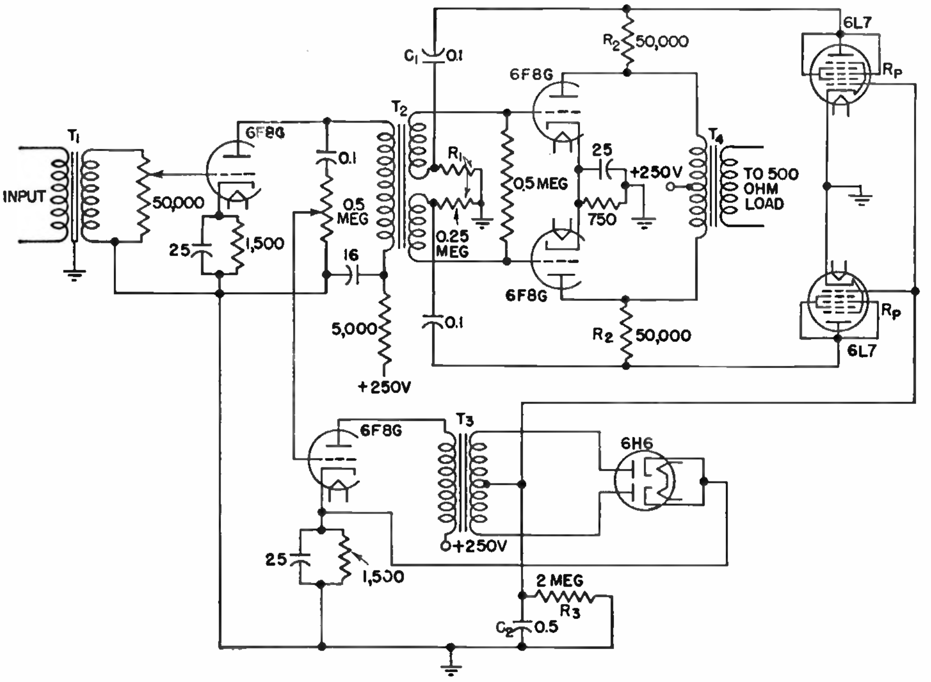

With an initial positive bias on the 6H6, the control of the auxiliary amplifier gain will delay compression till any desired output, within the limitations of the amplifier, is reached. In this particular case, since a separate power supply is used, the bias is conveniently obtained from the cathode of the auxiliary amplifier.

The rectifier circuit is of the usual type. Fast action is obtained through the use of a stepdown rectifier transformer with the moderate value of 0.5 μf for C_2. The releasing time may be controlled by R_3. With an amplifier plate resistance of 7,700 ohms, a transformer ratio from primary to half the secondary of 2:1, and a resistance of 1,000 ohms for 6H6, the acting time is 1.5 milliseconds. The releasing time, with R_3 as 2 megohms, is 1 second.

A push-pull compressor stage with a balanced feedback network is necessary to eliminate transient distortion due to compressor action, as well as being desirable from the standpoint of low inherent distortion. Noise and hum level is low, being 75 db below 6 milliwatts output. This is due in part to the use of a separate power supply of the regulated type.

In broadcast service, this amplifier is able to handle all ordinary peaks. There are no thumps when compression takes hold, and the general operation, as indicated by listening tests, is quite smooth.

H. H. Stewart and H. S. Pollock, Compression with Feedback, *Electronics*, February, 1940, p. 19.

Saturation Type of Limiter with Plate- and Screen-voltage Control Only

By using partly fixed-bias and partly self-bias arrangements in the cathode circuit of the output tube, output saturation threshold control is obtained by varying only the common d-c plate and screen-grid voltages on the output tube. This is done in steps that give changes of 5 db in output limiting level. Resistor R_7 in the control-grid circuit of the output tube reduces a-c loading, and it prevents excessively high direct current through the secondary winding of the interstage a-f transformer when rectification occurs in the grid circuit of the output tube. This limiter is useful for c-w reception only. There is some loss in gain below limiting threshold for the lower levels of limiting, amounting to about 5 db for about 21 db of threshold adjustment.

Emerick Toth, Noise and Output Limiters, Part II, *Electronics*, December, 1946, p. 120.

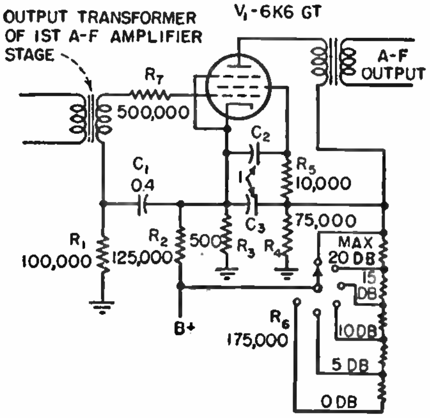

Saturation Type of Audio Limiter Preceding the Output Stage

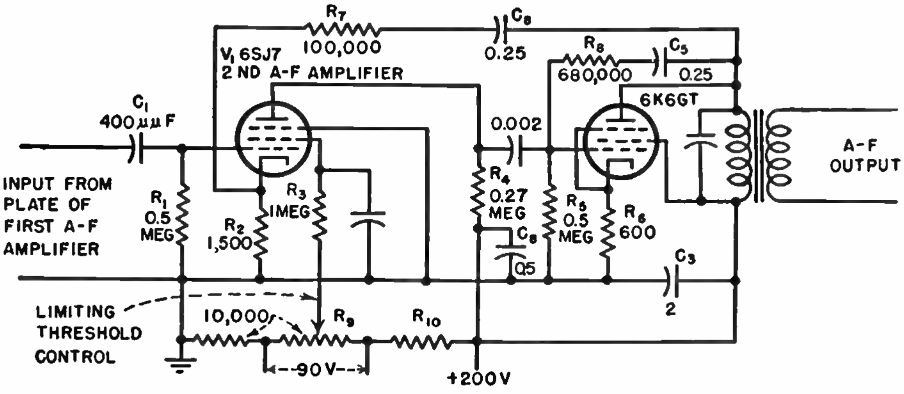

This circuit obtains its output limiting effect in the a-f stage preceding the output stage. It also employs some degenerative feedback to the limiting amplifier from the output as an aid in maintaining the gain below the limiting threshold as nearly constant as possible.

Limiting is done interstage primarily because of the low limiting level of 60 microwatts required for minimum threshold value. For a limiting level range of 20 db, this circuit gives a decrease in gain below threshold of about 10 db, and a decrease of 16 db for a limiting level range of 30 db. These comparatively large losses in gain for lower limiting levels are due to the low minimum limiting level required in navy receivers. Better transient characteristics are obtained when the a-f amplifier gain prior to the limiter stage is reduced to a point at which the grid circuit of the limiter stage is not overdriven by too great an input.

Emerick Toth, Noise and Output Limiters, Part II, *Electronics*, December, 1946, p. 120.

Peak-clipping and Audio-filtering Circuit for Preventing Overmodulation

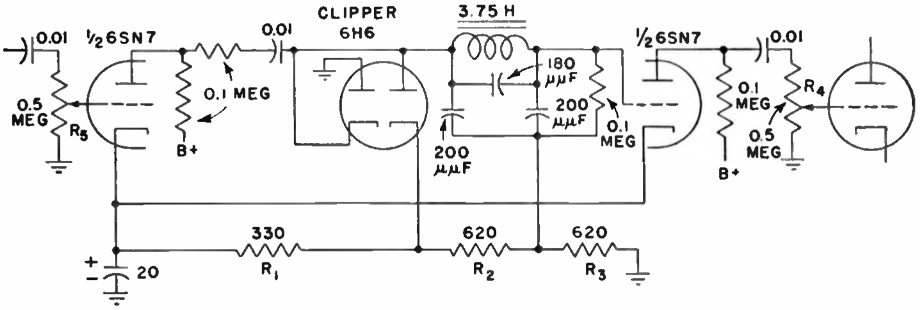

As a means of boosting the average percentage of modulation in a radiotelephone transmitter without causing overmodulation and resulting splatter on peaks, the accompanying circuit offers some advantages over volume compressors or low-pass or band-pass filters.

The clipper is an instantaneous device, inoperative until the audio voltage reaches a predetermined level and then chopping off everything above that level. Although this introduces considerable distortion, it occurs at a point where the objectionable high-frequency harmonics can be controlled and not allowed to appear in the side bands. Such distortion as is left does not appreciably affect intelligibility.

In the shunt type of clipper circuit shown, the bias for the clipper is obtained from the 6SN7 cathode resistors R_1, R_2, and R_3. Clipping begins at an audio level of about 3 volts. The amount of clipping is determined by the voltage at R_5. Potentiometer R_4, a screw-driver adjustment, is set for 100 per cent modulation with R_5 advanced about half way, and R_5 is then used to adjust the amount of clipping. The low-pass filter following the clipper prevents high audio harmonics from modulating the carrier and causing unnecessarily wide signals. The filter cutoff frequency is 4,000 cycles. The filter choke must maintain its inductance over the a-f range.

John W. Smith and N. H. Hale, Let's Not Overmodulate—It Isn't Necessary! *QST*, November, 1946, p. 22.

Full-wave Shunt Type of Output Limiter

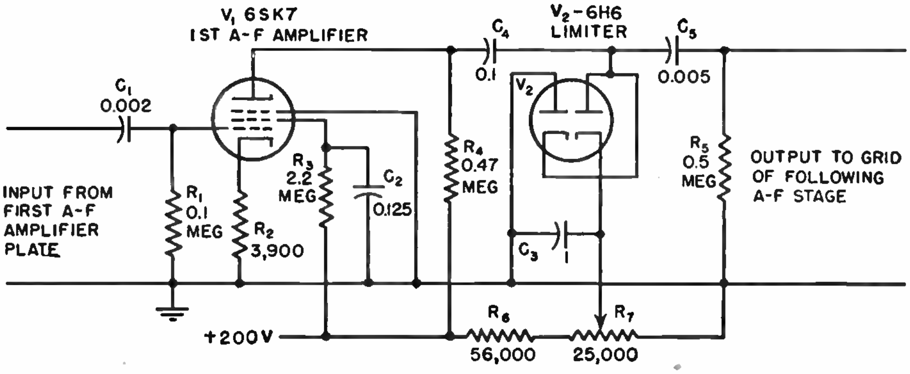

Two diodes in a single 6H6 tube connected interstage serve as a full-wave shunt type of audio output limiter. One diode shunts plate load R_4 of the interstage a-f amplifier tube for the positive and the other diode shunts for the negative half cycles of the audio signal. The diodes are biased in series with a d-c voltage obtained from R_7, which controls the threshold level above which the diodes become conducting on audio peaks. The diode impedance when conducting is only about a few thousand ohms, so that the plate load of the preceding amplifier tube drops from about 250,000 ohms below limiting threshold to perhaps 5,000 ohms during limiting action. With a high plate-impedance tube, this load change will produce about 30 db less amplification above the limiting level than below it. This loss of amplification, combined with normal saturation effects in the preceding amplifier tube, limits the output peak voltage to a value that cannot exceed the d-c limiting bias of R_7 by any considerable amount. This limiting system is considered to be among the best of the audio output limiters for c-w reception. A similar arrangement can be used following the audio output amplifier, using thermionic, gas, or crystal diodes.

Emerick Toth, Noise and Output Limiters, Part II, *Electronics*, December, 1946, p. 120.

Lamb Noise-silencing Circuit for Making Noise Pulses Block an I-F Stage

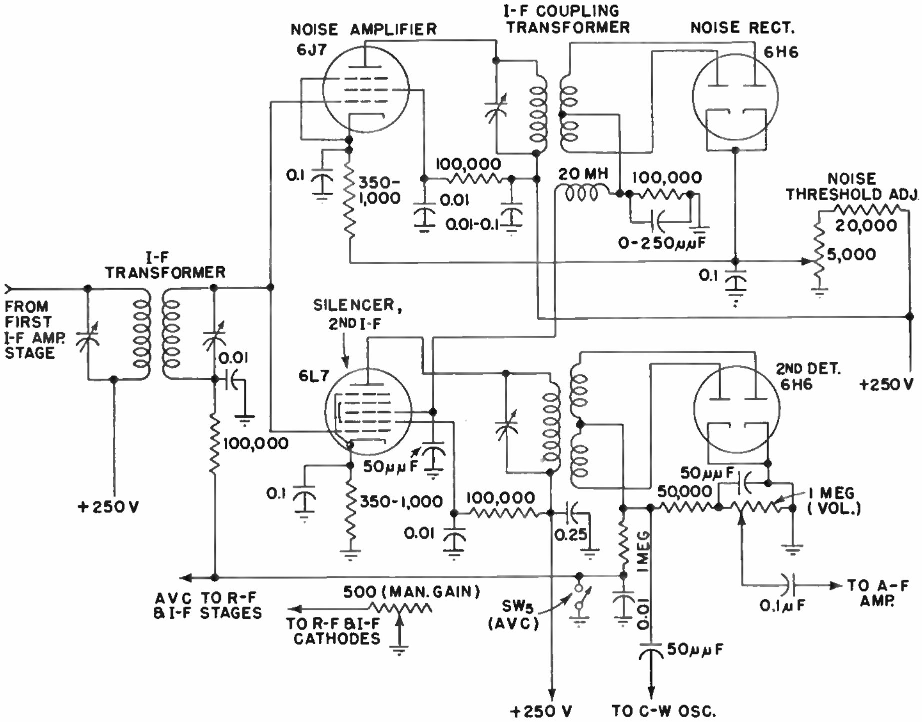

THE circuit originally developed by J. J. Lamb for use in the i-f circuit of a superheterodyne receiver to suppress explosive-type interference involves principles that may well have industrial applications also.

Briefly, the circuit is effective against noise peaks of higher amplitude than the signal envelope. The circuit operates by separating part of the noise energy from the signal energy in a biased diode circuit, and using this noise energy to block one of the i-f amplifiers. By this means, the receiver becomes inoperative for a short instant during the noise pulse, and holes of silence replace the bursts of noise.

The action is not perfect, since there remains considerable residual noise from low-amplitude components and from cross modulation within the i-f amplifier and the second detector. This residual noise manifests itself as a hiss that is not objectionable to the ear.

The noise-silencing action of the circuit takes place as follows: An i-f signal (supplied by a conventional first detector) consisting both of the desired signal and the noise is fed simultaneously to an i-f amplifier, which acts also as the silencer tube, and to a noise amplifier. The latter tube, a 6J7, amplifies the signal and noise and feeds them to a 6H6 full-wave diode. The biases applied to the 6J7 and the 6H6 are controlled by a manually operated volume-control type resistor. The bias on the diode is adjusted until its value is equal to or slightly greater than the maximum amplitude of the envelope of the desired signal. No rectifying action takes place therefore until a noise pulse of higher value than this bias appears.

The March of Electronics, *Electronics*, March, 1936, p. 7.

Logarithmic or Compressor Type of Audio Output Limiter

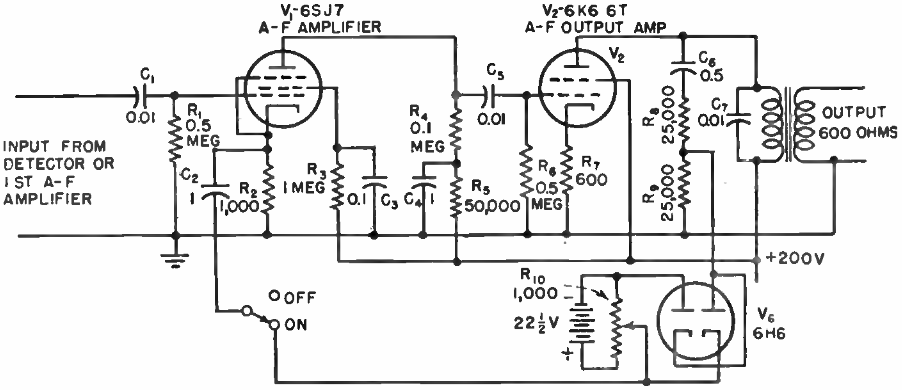

THE circuit shown was used to investigate the possibility of providing output limiting without serious audio distortion by virtue of exponential nonlinear response, the theory being that a logarithmic increment in output for a linear increment of input would not cause distortion sufficient to destroy intelligibility.

The arrangement consists of a two-stage a-f amplifier with degenerative feedback from the plate circuit of the output tube to the cathode of the preceding stage. Two diodes are connected in series with the feedback path, in such a way as to provide a path for both positive and negative half cycles of the feedback voltage. Potentiometer R_{10} across a battery provides d-c bias to the diodes for setting the limiting level. The diode d-c circuit resistance is kept low to take advantage of low diode internal impedance values varying at an exponential rate with applied voltage. Using the diodes in this manner as feedback impedances is equivalent to varying the feedback percentage from a low value to a maximum as the instantaneous feedback voltage rises, with the reverse effect as the instantaneous feedback voltage falls.

Within the nonlinear portions of the output characteristic, this circuit produces considerable distortion on speech or music, but does not destroy intelligibility. Noise interference is reduced substantially, and almost as effectively in some cases as with a series noise-peak limiter, if the desired signal is kept within the first linear portion of the output characteristic while noise peaks extend into the compressed region beyond.

Emerick Toth, Noise and Output Limiters, Part II, *Electronics*, December, 1946, p. 120.

MEASURING CIRCUITS

Direct-indicating Comparison Bridge for Production Testing of R, L, and C

Designed for rapid production testing where moderate accuracy is desired, the circuit shown provides comparison of resistors, capacitors, and inductors to a similar standard. It consists of an a-c slide-wire bridge and an electron-tube indicating circuit. The slide wire covers a range of approximately ±50 per cent of the value of the standard.

Three working standards are used in calibration of the gear: one of nominal value and one each of upper and lower desired limits. Low and high values can be different. After adjustment, the separate indicating meter provides a within-limits reading up to a marked point on the scale or an outside-limits reading beyond. Thus the testing operator is not required to rotate dials or press buttons.

Accuracy of the equipment is largely dependent on the care with which limits are set, as well as on variations in line voltage. However, sensitivity and stability are such as to permit successful operation with limits set as close as ±5 per cent or as wide as ±50 per cent of nominal. The range of measurement on capacitance is from 0.0001 to 1.0 μf; in resistance, from 2,000 ohms to 20 megohms; in inductance, from 5 to 50,000 henrys.

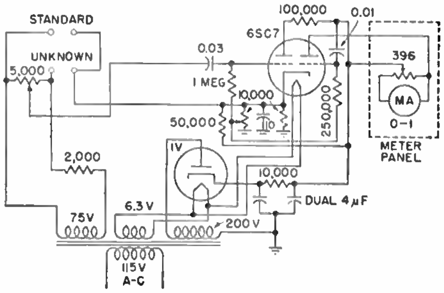

Direct-indicating Comparison Bridge for Production Testing, *Electronics*, December, 1945, p. 272.

A Wide-range Wheatstone Bridge for Resistance Measurements

This bridge circuit measures resistance over a range extending from less than 0.1 ohm to a million megohms—a range of 10^{13}. Relatively few standard resistors are required, and it is suitable for precision measurements as well as production checking to specified tolerance limits.

In the bridge circuit, the multiplier switch selects the proper values for the *B* and *C* arms in accordance with the table. The *A* arm consists of a standard decade resistance box permitting settings from 10 ohms to 111,100 ohms. While a 1-ohm decade may be substituted for the larger 10,000-ohm decade, the latter is to be preferred, since it permits the application of higher voltages when measuring high values of resistance. For convenience all the arms of the bridge are brought out to separate terminals when the multiplier switch is placed in the External position. This makes it possible to extend the range of the bridge or to substitute other standards. The guard terminal that is also made available can be used in the measurement of three-terminal resistances.

A balanced circuit is used in which the cathodes of the two 6K6G tubes are connected together and returned through a 50,000-ohm resistor to a negative point on the power supply. The power supply is conventional and provides the plate voltage of plus 20 volts, the cathode-return voltage of minus 40 volts, and the heater voltage of 5.0 volts.

Because of the high value of cathode resistance, an unusually high degree of self-regulation is secured. However, this is not accompanied by any appreciable loss in sensitivity since a push-pull action takes place that minimizes the degenerative effect normally obtained in a single-sided circuit. As a result of this self-regulating action, the indicator is highly stable and independent of line-voltage variations over a wide range.

Possible error that might arise as the result of grid current is eliminated by reducing the grid current to a very low value and by placing the balance switch in the bridge voltage-supply circuit rather than in the indicator circuit. The choice of tube type, operating conditions, and circuit design all combine to reduce the grid current to less than 0.0001 microampere.

The galvanometer is protected against injury by means of the 2-megohm resistor in the grid circuit and the 50,000-ohm cathode resistor. Both of these combine to prevent an excessive increase in cathode current and consequently in the current through the galvanometer. At the same time, the grid resistor and capacitor form a filter that prevents an indication as the result of stray alternating voltages.

Because of the extended high-resistance range of the bridge, care must be taken to prevent stray leakage paths from impairing the accuracy of measurement. Greatly improved performance can be obtained by using a conducting rather than an insulating panel. Where a metal panel is used, the leakage paths which exist are not between the several junctions of the bridge but are directly to the guard terminal which is connected to the panel. This is especially important because of the fact that the vacuum-tube indicator and its associated plate leads are in proximity to the panel, and any leaks between these leads and points in the bridge circuit would produce an error.

As far as the insulation of points 1 and 2 from the panel is concerned, the values of shunt-leakage resistance must be high in comparison with 100,000 ohms, the latter being the maximum value of resistance used in the *A* and *B* arms. This condition is easily satisfied. The voltage used to supply the bridge must also be carefully insulated from the panel, since any leakage to the panel will appear as a shunt resistance across the *A* and *B* arms. Again this leakage must be kept to a value high in comparison with 100,000 ohms.

The point at which the insulation must be of the highest quality is at the high terminal of the unknown resistance *R*. To satisfy this requirement a ceramic insulator that has low surface leakage is used. Separate insulators are used for the two terminals of *R* so that these two terminals in conjunction with the panel form a three-terminal network in which the leakage to the panel does not affect the accuracy; the only effect of leakage between the high terminal of *R* and the panel is to lower slightly the sensitivity of balance where high values of resistance are being measured. As long as the leakage resistance between the low terminal of *R* and the panel is high in comparison with 100,000 ohms, the accuracy is not impaired.

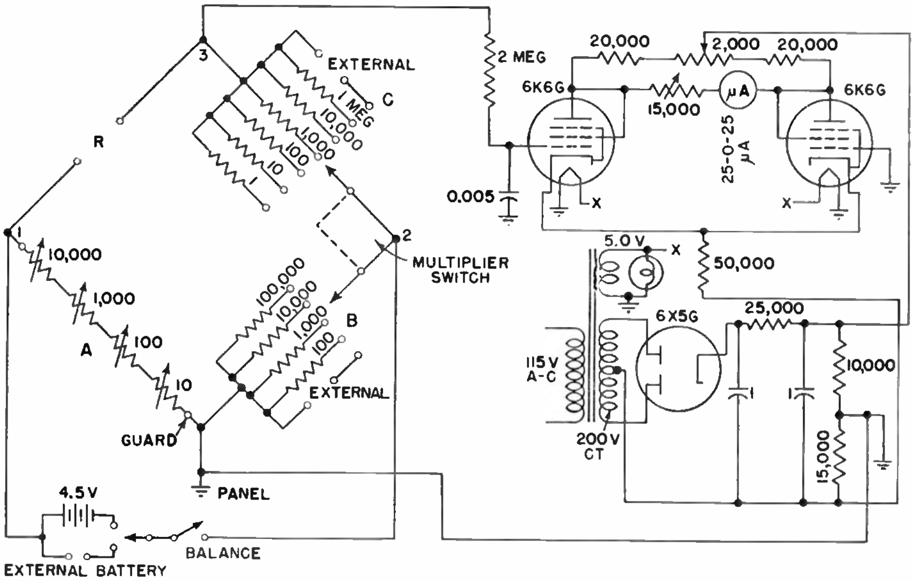

The measurement of resistances above 100 megohms is preferably made by using a 100-megohm standard in the *C* arm. An inexpensive and satisfactory standard can be made by placing ten 10-megohm resistors of the metallized type in series.

To reduce errors due to switch-contact resistance, the minimum value of resistance used in the *C* arm is kept to 1 ohm; this minimum value is used for the measurement of resistances below 1 ohm. Since the switch-contact resistance is less than a milliohm, the error from this source will not exceed 0.1 per cent.

Heavy bus bars should be used to connect the low side of *R* to the battery junction 1 and the high side of *R* to the indicator junction 3. Alternatively, the need for these heavy leads can be reduced by wiring the indicator to the high terminal post of *R*, and by wiring one side of the bridge supply voltage directly at the low terminal post of *R*. Where this arrangement is followed, the internal lead resistances connecting the *R* arm with the *A* and *C* arms appear as part of the *A* and *C* arms rather than as part of the resistance being measured. Since the minimum value of resistance ever used in the *A* and *C* arms is 10 ohms, these lead resistances do not cause any error provided that reasonably heavy wire is used.

For the production checking of resistors, the indicator is provided with a 15,000-ohm rheostat which can be preset so that the maximum allowable error will cause a deflection in either direction from the zero to two fixed indices on the meter scale.

The following values of *B* and *C* arms were used.

Switch position	*Range, ohms*	*B, ohms*	*C, ohms*
1	0.001–1	100,000	1
2	1–10	100,000	10
3	10–100	100,000	100
4	100–1,000	100,000	1,000
5	1,000–10,000	100,000	10,000
6	10,000–100,000	10,000	10,000
7	100,000–1,000,000	100,000	1 meg
8	1 meg–10 meg	10,000	1 meg
9	10 meg–100 meg	1,000	1 meg
10	100 meg–1,000 meg	100	1 meg
Ext.	100 meg–1,000 meg	10,000	100 meg
Ext.	1,000 meg–10,000 meg	1,000	100 meg
Ext.	10,000 meg–100,000 meg	100	100 meg
Ext.	100,000 meg–1,000,000 meg	10	100 meg

Jack Avins, A Wide Range Wheatstone Bridge, *Electronics*, July, 1939, p. 38.

Two-tube D-C Vacuum-tube Voltmeter with Cathode-follower Input

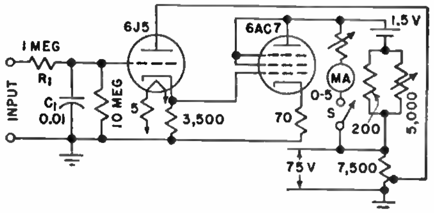

This circuit was designed to overcome, by sacrificing some simplicity, the shortcomings of the single-tube voltmeter. This d-c voltmeter is essentially a two-stage amplifier with the first stage serving only to couple the source to the second tube. The first stage is a cathode-follower arrangement and is highly stable because of the large degeneration. The 6J5 is operated with low voltages on the heater and plate in order to reduce the grid current in both tubes. The high side of the input is connected through a shielded lead with a 1-megohm isolating resistor, thus providing an input resistance of 11 megohms. This resistance could be made larger.

The bias for the 6AC7 is the algebraic sum of the voltage drops across the two cathode resistors. The initial plate current is balanced out by a No. 6 dry cell. Instead of this cell, a suitable voltage may be tapped from the bleeder resistance but this reduces the sensitivity somewhat. In order to protect the indicating instrument against excessive deflection, switch *S* is left open until the heater of the 6AC7 has warmed up. The sensitivity can be controlled by the rheostat in series with the milliammeter. The supply voltage is regulated by using a VR75 tube.

This voltmeter is strictly linear; the zero point is stable, and no appreciable grid current is observable in the 6J5. An input of 1.5 volts gives a full-scale deflection on a 5-ma instrument of 1 per cent accuracy. The circuit is sufficiently stable so that, by means of a more sensitive indicator, the range of the voltmeter may be extended upward by a conventional voltage divider across the input. Because of the filtering action of the input circuit, d-c voltages can be measured correctly even in the presence of superimposed a-c voltages.

J. T. McCarthy, Improved Vacuum-tube Voltmeters, *Electronics*, July, 1945, p. 137.

Two-tube Vacuum-tube Voltmeter Circuit with A-C Plate Supply

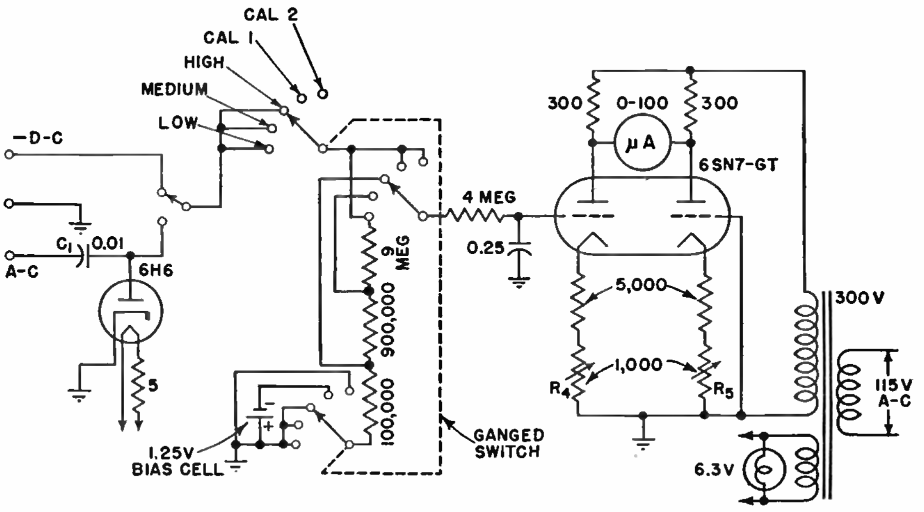

This voltmeter circuit is suitable for a wide range of voltage and frequency and uses an a-c operated triode amplifier fed by a diode that rectifies the incoming signal. The readings are relatively unaffected by line-voltage changes and no voltage regulator is required.

A 6H6 diode is used as the input tube when an alternating voltage is to be measured. One section of this tube serves as the rectifier of the a-c input, while the other section is unused. A small resistor is used in series with the heater of the 6H6 to lower its filament voltage.

A selector switch is provided so that either direct or alternating voltages may be measured. The d-c position of this switch removes the diode from the circuit and substitutes the direct voltage that is to be measured for the rectified output of the diode. Whichever of these voltages is to be used is impressed across the voltage divider to which the range switch is connected. For a given meter range, this simply selects a portion of the voltage available and applies it to a resistance-capacitance filter, after which it is impressed upon the grid of the a-c operated amplifier.

The diode circuit and the polarity marking of the d-c input terminals are arranged so that the signal grid of the 6SN7 is always at zero or at a negative potential. This eliminates practically all grid current of the double triode and makes it possible to limit the total current that can flow through the meter, even with a severe overload at the voltage input terminal.

To assure that the voltmeter produces an accurate indication at all times, a Mallory grid-bias cell is used as a standard with which the a-c operated circuit can be calibrated. If the cell has first been aged for about 1,000 hours, and if no direct currents larger than 10^{-7} ampere flow in the cell circuit, the output voltage of a 1¼-volt cell may be expected to be maintained under normal temperatures to within ±2 per cent of its original value for at least 2 years.

Two of the range switch positions, labeled Cal. 1 and Cal. 2, are used for checking the calibration of the meter by the method outlined above. When the switch is at Cal. 1, a known direct voltage from the bias cell is connected between ground and the bottom of the voltage-dividing resistor. The adjustable resistor R_4 is varied until the meter deflects to a calibration point on the scale of the moving pointer meter. The range switch is then set to Cal. 2, and the resistor R_5 is adjusted to give a meter indication of zero. These two adjustments are repeated in succession until the meter indicates zero at Cal. 2 and up to the marked point at Cal. 1, at which time the instrument is correctly calibrated.

Experimental checks show that changes of ±10 per cent in line voltage result in variations of less than ±2 per cent in the indication of the meter throughout all reading ranges both on the a-c and on the d-c settings.

The input impedance of the instrument with the switch on the d-c position is a resistance of 10 megohms shunted by a capacitance of 15 μμf. With the switch on the a-c position, the impedance is rather complicated because of the rectifier action of the diode, but the loading effect upon most circuits encountered in ordinary laboratory work has been found to be negligibly small.

The instrument is useful and reliable for frequencies between 50 and 20 × 10^6 cycles. Over this range, the a-c-operated voltmeter should be accurate to within 5 per cent of full scale deflection.

Any vacuum-tube voltmeter of this peak-reading type is subject to serious errors if a calibration based upon root-mean-square sinusoidal voltage is used to measure voltages of nonsinusoidal wave form. A percentage error, equal to the percentage of harmonic amplitude present in the voltage being measured, is possible.

James Norton Thurston, An A-C Operated Vacuum Tube Voltmeter, *Electronics*, October, 1943, p. 102.

Tube Tester for High-power Thyratrons, Phanotrons, and Other Tubes

The accompanying circuit has proved highly satisfactory for checking FG57 and FG95 thyratrons, FG32 phanotrons, and 872A rectifier tubes for shorts, low ionizing potential, erratic operation, and low emission. The tester operates from a 440-volt single-phase 60-cycle a-c line.

If it is assumed that switch S_2 is in the position which disconnects the anode, grid, and cathode from their respective circuits and that switch S_1 is closed, the filament of the tube under test is being heated by the secondary of transformer T_3, which in turn is supplied by the secondary of transformer T_1.

With S_1 and S_2 in the above positions, switch S_3 is rotated to apply 110 volts in series with the neon tube between grid and cathode, grid and plate, and cathode and plate in turn of the tube being tested, as a shorted-electrode test.

Throwing switch S_2 to its other position applies all voltages to the tube under test and permits regular tests on the tube. The grid potential at the instant that the tube becomes conductive is read on the voltmeter. The plate current is then read on the 10-ampere d-c ammeter in series with the load resistor, which is of such value as to allow the passage of rated load current for the tube. The tap and switch S_6 are provided because some of the tubes tested have a different plate-current rating.

Under the foregoing conditions transformer T_2 is also energized. It applies a rectified voltage between the grid and cathode of the tube under test, through the type 80 rectifier tube and the brute-force filter, which consists of C_1 and C_2 and choke L_1. The grid is negative with respect to the cathode here, and the value of the grid-cathode voltage is determined by the setting of the potentiometer in series with the 3,000-ohm resistor, which together serve as voltage divider and bleeder. The value of this voltage is indicated by a 25-volt d-c voltmeter. Capacitor C_4 maintains the grid at a constant potential, which is independent of ripple voltage or surges. S_4 is a normally open pushbutton switch, serving to bring the grid to zero potential as a check for intermittent operation of the tube.

To test an FG57 thyratron, all switches are in off positions, and the potentiometer is in its minimum-voltage (counterclockwise) position. Insert tube in socket, and connect grid lead to cap on top of tube. Close switch S_1, and wait until condensation has cleared from sides of tube.

Rotate switch S_3 through its three positions, and observe the neon tube. If both sides of tube light simultaneously, a short circuit is indicated, and the tube should be discarded without further test.

Close switch S_2, and rotate the potentiometer slowly in the clockwise direction while watching the grid-voltage meter. The tube should ionize when the grid meter reads 5 volts. If the reading is appreciably lower, a weak tube is indicated, and the tube should be discarded or marked Weak. After the tube has ionized, advance the potentiometer to its extreme clockwise position, and observe the reading of the plate-current meter. This reading should be 2.4 amperes. A lower reading indicates low emission, and consequently a weak tube.

Press pushbutton switch S_4 to short-circuit the grid to the cathode. The tube should ionize each time this switch is depressed, regardless of the setting on the potentiometer. This switch is incorporated to facilitate locating tubes that may be erratic in operation.

To test an FG95 thyratron, all switches are in off positions, and the potentiometer is in minimum-voltage position. Insert an FG95 tube in socket, connect to cap on top of tube, and connect to cap on side of tube. Remainder of procedure is identical with that given above.

For the FG32 phanotron, all switches are in Off positions, and S_6 is in open position. Insert an FG32 tube in socket, and connect to cap on top of tube. Close switch S_1, and wait until condensation has cleared from sides of tube. Make leakage test as outlined for FG57. Close switch S_2, and observe reading on plate-current ammeter, which should be 2.4 amperes.

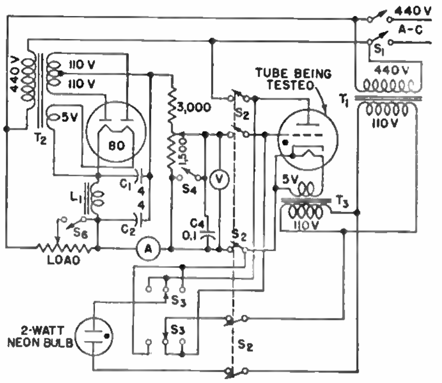

The procedure for testing the 872A rectifier tube is exactly the same as for the FG32 thyratron except that switch S_6 must be in its closed position and that the plate current should read 1.4 amperes.

V. P. McKinney, Thyratron Tube Tester, *Electronics*, July, 1943, p. 128.

Vacuum-tube Circuit for Use as Rheostat in Calibrating D-C Meters

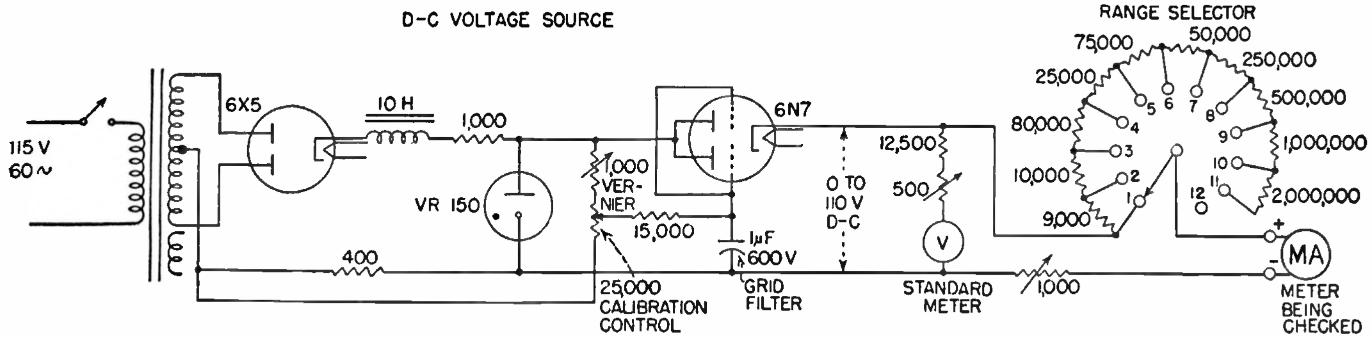

The calibrating of d-c measuring instruments during manufacture or the rechecking of accuracy during use requires a d-c source of power that provides an accurately known and smoothly variable voltage. The drawbacks of carbon-type potentiometers in conventional voltage-dropping circuits for both batteries and power packs led to investigation of vacuum tubes as rheostats.

A tube having a sharp cutoff, such as a 6N7 operated as a single triode, gives a plate-cathode resistance variation from about 3,000 ohms up to practically infinity when grid bias is varied over a range from a positive value of a few volts to just beyond cutoff bias. This permits use of the vacuum-tube rheostat in series with the source for voltage-dropping purposes rather than as a voltage-dividing potentiometer. The 25,000-ohm potentiometer for bias variation is a wire-wound unit having long life at the low grid-current values encountered.

The meter to be checked is converted to a 100-volt d-c voltmeter by appropriate multiplier resistors in series and is connected in parallel with the precision standard 100-volt meter in the instrument. Both meters are fed by a regulated full-wave power pack through the series vacuum-tube rheostat. The voltage is varied from 0 to 100 volts by adjusting the 25,000-ohm potentiometer in the grid circuit while the readings of the two meters are compared. Fine adjustments of voltage are obtained with a 1,000-ohm rheostat serving as vernier control in the grid circuit.

Roscoe Ammon, Production Testing of Panel Meters, *Electronics*, February, 1946, p. 170.

Transient Peak Voltmeter for Measuring Single Pulses

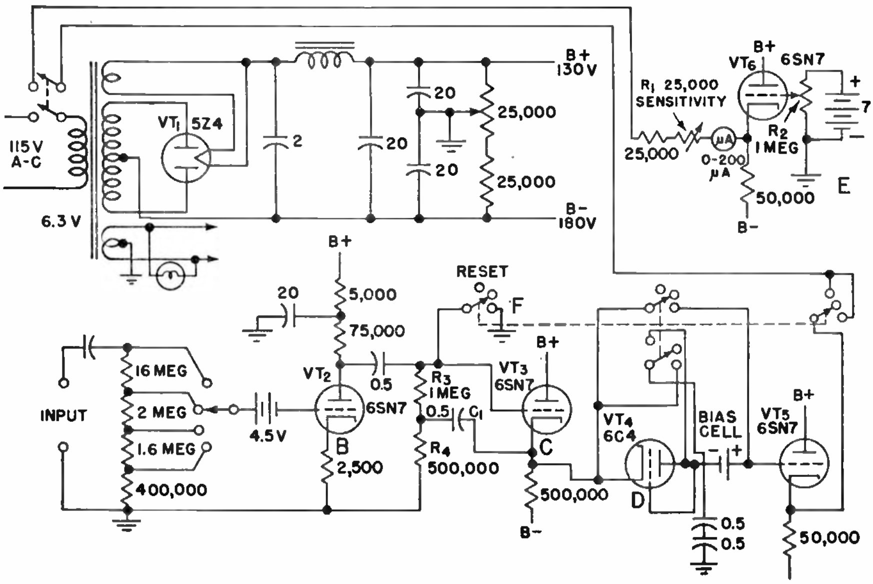

This transient peak voltmeter uses the fast transient signal of the circuit under test to charge a low-leakage capacitor through a diode in the voltmeter circuit. The high inverse impedance of this diode allows the capacitor to remain charged for a considerably longer period than that of the signal. By making the capacitor's discharge time sufficiently long, the initial charge can be measured by means of a high-input-impedance balanced bridge containing a d-c instrument between the arms.

The circuit will measure the peak value of the input signal and hold the reading for several seconds or until reset by the manipulation of the reset switch. There are four input voltage ranges, of 1, 5, 10, and 50 volts full scale, to cover the most generally used range of voltages. Higher or intermediate ranges can be added if desired. Lower ranges could be provided by the addition of suitable amplifiers. The input circuit has a constant input impedance of 20 megohms and contains a blocking capacitor that prevents direct current in the measured circuit from affecting a measurement.

The frequency-response characteristics of such a voltmeter can best be considered as the response to single transients with various times to the peak. Assuming the pulses to be the equivalent of one-half cycle of sine wave, the response is flat within 2 db from 5 milliseconds to ½ second and time to the peak.

The amplifier-inverter (*B*) provides a gain of 10 and inverts the signal-voltage polarity from positive to negative. The amplified and inverted signal then goes through the impedance transformer (*C*), which is no more than a cathode-follower circuit used to match the plate circuit of the amplifier to the low-impedance diode hold-on circuit (*D*) which charges a low-leakage capacitor to the peak value of the incoming signal. The charging impedance of this circuit is low but the discharge resistance is extremely high, in the order of several hundred megohms.

The value of the voltage that is fed into the hold-on circuit is measured by the balanced bridge (*E*). This voltmeter circuit is designed to have high input resistance, so that the signal will not be dissipated by the measuring device. At the conclusion of a measurement the hold-on circuit is reset and made ready for a new signal by the manipulation of the reset switch (*F*). This action discharges the hold-on capacitor.

The potentiometer control R_1 adjusts the sensitivity of the voltmeter and is used during calibration. The control R_2 is the zero-set adjustment that provides balance between the tubes of the voltmeter bridge.

The voltmeter bridge is a double cathode-follower arrangement, with the input signal applied to the grid of tube VT_5, the balance potential applied to the grid of VT_6, and the indicating instrument connected between the cathodes of these two tubes. The compensation network in the grid circuit of cathode-follower tube VT_3, consisting of resistances R_3, R_4, and C_1, improves the frequency response of the preceding amplifier tube VT_2 by increasing the input impedance of the cathode-follower circuit. The bias cell in the input to VT_5 is necessary in order to cancel the diode potential that otherwise would cause a spurious zero reading. The presence of this cell requires that the reset switch be connected to discharge the capacitor without shunting the bias cell.

The voltage that is applied across the balance or zero-set resistor R_2 is in practice obtained from a small C battery.

C. Ryerson and M. Aronson, Transient Peak Voltmeter, *Electronics*, September, 1945, p. 110.

Balanced Cathode-follower Input for Stabilized VTVM

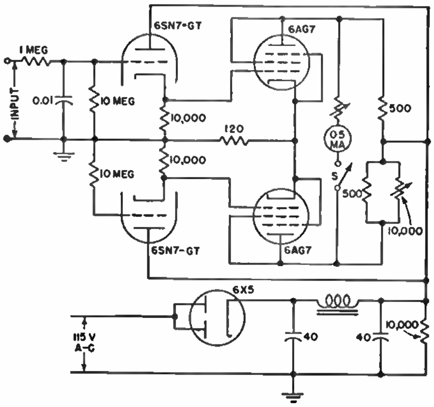

The circuit shown provides linear response and avoids the use of a battery to balance out the initial tube plate current. It stabilizes easily against line-voltage variation; hence a stabilized power supply is not usually required. The two 6AG7 tubes and the two sides of the 6SN7GT should be approximately matched for optimum stability.

A deflection of 10 ma can be obtained for an input of 2 volts, but the circuit is usually operated conservatively with the constants shown so that 1.5 volts produces a reading of 5 ma. When a 1-ma meter is used, satisfactory performance is obtained with a full-scale deflection corresponding to 0.3 volt. Slight effects of line-voltage fluctuations are observable at this sensitivity.

J. T. McCarthy, Improved Vacuum-tube Voltmeters, *Electronics*, July, 1945, p. 137.

Two-tube Precision Moisture-testing Circuit for Granular Material

This circuit measures the moisture content of such things as cattle foods, seeds, dehydrated foods, straw, tobacco, malt, clays, and plastic powders and is remarkable for its accuracy and simplicity. Most readings are correct to within about 0.5 per cent moisture, and different unskilled users can easily obtain results differing by less than 0.2 per cent.

The circuit is designed to respond to capacitance or a-c conductance changes or to any combination of the two, the latter condition being very suitable for producing a linear scale of moisture. Another advantage is that a rise in temperature produces a decrease in dielectric constant and an increase in conductivity so that a combined method of measurement enables over-all temperature variations to be minimized.

The material to be examined is placed in a test cell and a constant alternating voltage applied. The resultant current is the vector sum of the conduction current, which is in phase with the applied voltage, and the capacitance current, which is in quadrature with it. This resultant current is passed through a fixed resistor and the potential difference at its terminals contains two components in quadrature that are proportional to the capacitance and conductance of the material being tested.

A voltmeter is connected to the terminals of the resistor so that it measures the component of the total voltage which bears a definite phase relationship to the main supply or some auxiliary voltage.

If there is a suitable phase relationship between the cell voltage and the reference voltage, the voltmeter can be arranged to indicate only that component of the resistor potential difference which is proportional to the capacitance of the cell or the component which is proportional to the conductance, the change from one to the other being made by moving the cell voltage through 90 degrees. Should the phase be intermediate to these points, the voltmeter will indicate a proportion of the capacitance and conductance voltages.

The two tubes receive equal anode voltage from the center-tapped transformer but with opposing phases. In series with the cathodes are resistors R_1 and R_2, with a variable linking resistor. Both grids are joined, and the voltage to be measured is applied to them so that the resultant voltage operative in the anode circuit of one tube is $\mu V + V$ while the other is $\mu V - V$, V being the anode voltage.

The indicating instrument is a d-c microammeter connected across the two cathode resistors. A 50-henry choke is connected in series with the indicator to prevent alternating current from flowing through it, and the combination is bypassed by capacitor C_1.

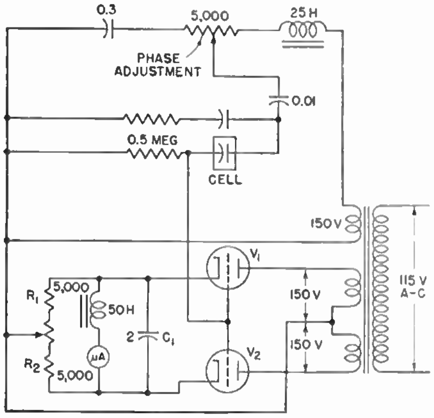

In operation, the tubes pass pulsating current, and the meter indicates the difference in the mean potential of the cathodes, which will be determined by the two anode voltages. To adjust the indicator to zero, the variable resistor joining the two cathode resistors is adjusted when the grid potential is zero, which takes place when the test cell is empty.

Automatic protection against overloads is obtained since resistors R_1 and R_2 determine the bias applied to the grids; if a large voltage is accidentally applied to the instrument, the grids automatically acquire a large bias.

John H. Jupe, Rapid Moisture Testing of Granular Material, *Electronics*, May, 1946, p. 180.

Vacuum-tube Voltmeter Circuit for Measuring Interelectrode Capacitances of Vacuum Tubes

Designed for production measurement of interelectrode capacitance of vacuum tubes, this instrument uses a single fixed standard, whose magnitude made an accuracy of one-half of 1 per cent readily obtainable, a range multiplier which could be voltage-calibrated, and a direct-reading capacitance indicator.

The equipment will readily measure other capacitances than those between vacuum-tube elements, and adequate measurements can be obtained without shielding of the test specimen when its geometry is determinate and the sample can be directly connected to the ends of the coaxial cables. Small fixed and variable capacitors may be measured, and characteristics which can be correlated with capacitance can be determined with the use of small samples.

The instrument consists of a power supply, oscillator, vacuum-tube voltmeter, and shielded junction block with associated tube adapters. The power-supply unit is fed by a voltage-regulating transformer and comprises separate supplies for the vtvm and oscillator.

The oscillator is a crystal-controlled Pierce type driving a 6L6 amplifier, part of whose output is fed back through a rectifier to provide automatic amplitude control. The voltage source is thus stabilized against line-voltage changes, frequency drift, and output-voltage amplitude variation arising from detuning and switching of load. The output of the oscillator is fed into a three-step decade attenuator which then feeds the voltage to the measuring network.

The vtvm is a high-gain three-stage band-pass amplifier, the input of which contains the dividing elements of the measuring network. This amplifier is followed by an impedance-changing tube that drives the 1-ma 6-inch indicating meter through a rectifier. Meter protection is provided by the circuit overload characteristic, which keeps the meter current from exceeding 2.3 ma for any value of input voltage. The range selector is a single control driving the attenuator and the divider switches that are linked by a gear and rack drive.

Calibration of attenuator steps is accomplished by supplying voltages from a calibrated source. This method has two primary advantages: (1) The calibration can be made against a single accurate standard of capacitance, and (2) the remaining ranges can be calibrated as voltage decades from the first range.

Variations of residual capacitance are eliminated by use of an adapter each of whose contacts is in a separate completely shielded compartment.

The adapters plug into a universal shielded socket, having all the pin contacts carried through shielded chambers to a series of receptacles mounted on an inclined periphery of the socket. This socket is in turn mounted upon and shielded from a casting whose periphery carries two banks of parallel-connected receptacles. Each bank is shielded; one bank connects to the oscillator and the other to the vtvm. Patch cords between the lower banks of receptacles and the receptacles in the socket serve to connect the tube elements into the measuring circuit in any arrangement required. The base casting also contains a 50-$\mu\mu f$ standard capacitor.

The instrument is readily operated, the controls being merely those for range and calibration. The gain of the vacuum-tube voltmeter is set, with the standard in place of the unknown, for a meter reading of 0.5. The tube elements are then connected so that the unknown capacitance is between the vtvm and oscillator circuits. The shield is grounded or connected to cathode, as required by the applicable test specification.

The capacitance between the tube elements being measured is the product of the meter reading and the multiplier dial setting. In the event that any of the readings fall upon the low end of the scale and greater accuracy is required, the range of the instrument can be varied by changing the calibration point, *i.e.*, calibrating at 1.0 instead of at 0.5 provides full-scale ranges of 50, 5, 0.5, 0.05, and 0.005 $\mu\mu f$. For production testing, other points of calibration may be selected so that the limits of measurement fall on a single scale for one range setting.

L. Y. Hanopol, Production Tester for Small Values of Capacitance, *Electronics*, September, 1945, p. 160.

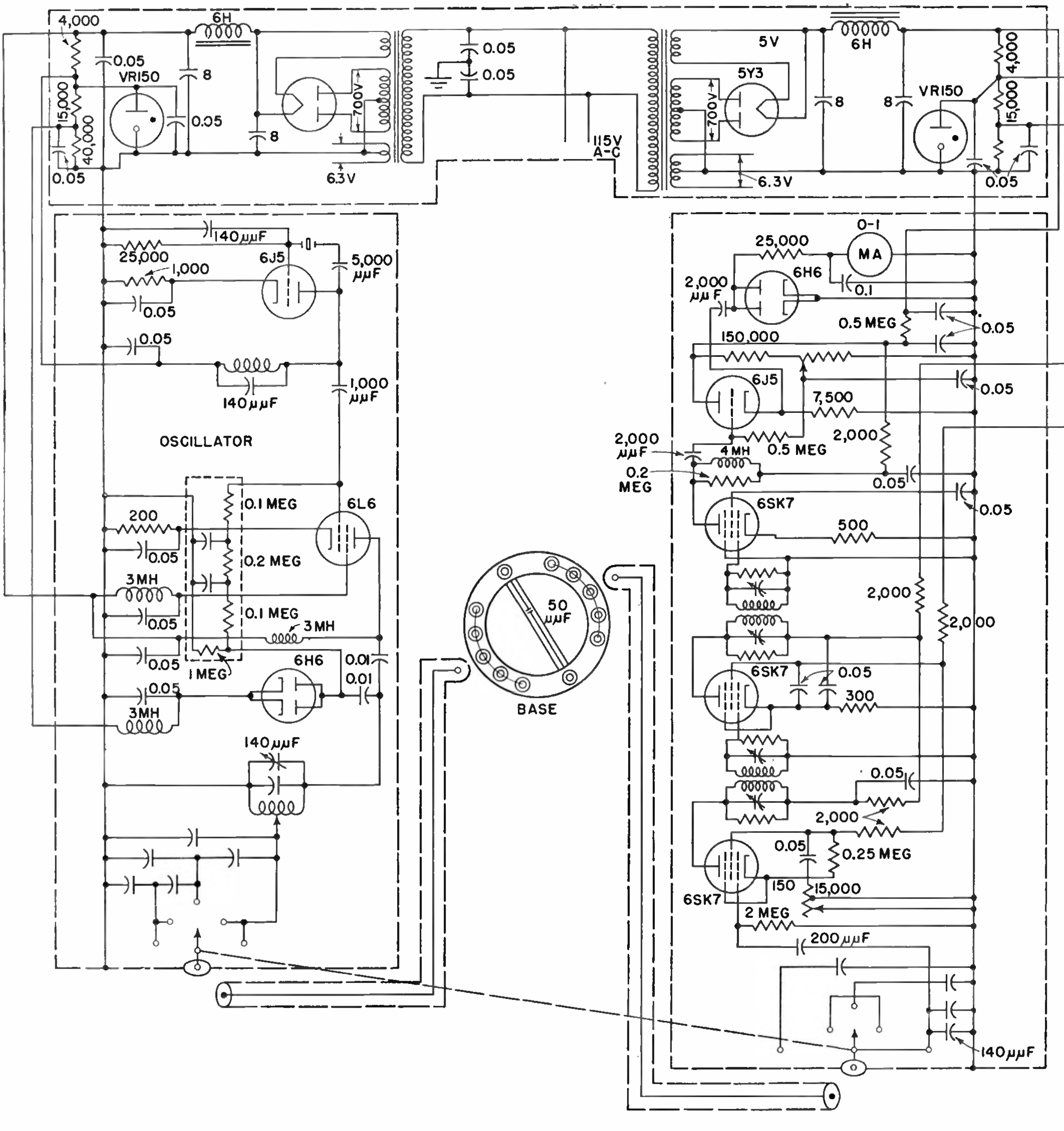

Inverted-triode Circuit for Measurement of Extremely Small Currents

A NEW electronic tube can measure hydrogen-ion contents of chemicals (pH), minute currents produced by phototubes, ion current in mass spectrometers, alloying constituents of steel, and minute quantities that previously required an electrometer or its equivalent.

In this tube the outer electrode, which is normally the plate in an ordinary vacuum tube, is used as the control grid. This inversion minimizes the space-charge effect, thereby making it possible to select a value of grid bias that will result in zero grid current.

Currents as low as 10^{-14} ampere can be measured and as low as 10^{-16} ampere can be indicated. Direct potentials can be measured to a sensitivity of 10^{-4} volt in circuits having up to 10^{12} ohms resistance.

The tube is termed an inverted triode because the outer electrode, which is normally the plate in an ordinary vacuum tube, is used as the control electrode or grid in this tube. This places the control electrode at a maximum distance from the space-charge region surrounding the filament, thus minimizing the amount of electrons collected by the control electrode. In this manner, the current to the control electrode is held at a minimum.

The mesh mounted between the filament and the control electrode is used as the anode. This construction provides more radiating surface to the grid, decreasing its temperature and possible thermionic emission. The control element, or grid, being farthest from the filament, receives less heat and light from the filament, thus decreasing emission from the grid.

The filament is operated at a low temperature to minimize the emission of photoelectrons and of primary electrons from the grid. All the electrodes are operated at rather low voltages to reduce the possibility of ionizing residual gas in the tube, which would cause positive ion current in the grid circuit.

In taking measurements of extremely minute currents, the electrostatic charges that build up on the inside surface of the glass bulb produce a sufficiently high electric field to affect the over-all sensitivity of the tube. This electric field also makes consistent results practically impossible. To eliminate this condition, a small piece of spring wire is mounted with a slight pressure against the inner wall of the glass bulb. The connection is then brought out to a base pin and connected to an electrical ground with respect to the other electrodes. If not thus neutralized, electric fields created by the charge on the glass bulb can easily be of sufficient magnitude to exert a greater control over the electron flow than is obtained from the control electrode.

A microammeter, or a galvanometer, must be used in the plate circuit to measure the small currents. The output may also be fed into a suitable voltage amplifier, in which case the RH507 tube will serve as a coupling device between the source under measurement and the amplifier proper. A typical electrometer circuit using a microammeter, or a galvanometer, is shown.

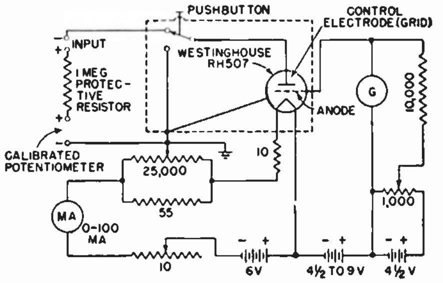

The tube and all leads from the voltage supply should be shielded carefully from stray magnetic or electrostatic fields. It is also necessary to shield the tube from light as there may be some photoelectric effects while sensitive readings are being taken. It is advisable to mount the tube in a reasonably tight shielded can containing a drying agent, such as calcium chloride or phosphorous pentoxide, to protect it from moisture condensing on the bulb surface.

The filament current is very critical and must be held constant. If there is any drift due to battery or other changes, the plate current will naturally shift, which will affect the constancy of the readings. It is therefore advisable to use only a battery which has been seasoned or has been stabilized so that its voltage has become practically constant.

Inverted Triode for Industrial Measurements, *Electronics*, December, 1944, p. 176.

Resistance Strain Gage Calibrator for Rapid Visual Tests

THIS circuit has proved extremely useful as a limit indicator for calibrating strain gages in the process of manufacture and the routine check of gage installations. Considerable saving of time is effected as compared with previous methods in which a galvanometer is used as the indicating device.

The instrument consists of a null-balance circuit using 6E5 tuning-eye tubes as null indicators.

The gage under test is connected to two terminals on the front panel. Evidence of faulty wire in the gage, open gages, corrosion of the wiring junctions, or poor insulation of the gage to ground is immediately apparent as either complete opening of the shadow angle or as an erratic flutter in this angle. Change of resistance in a gage due to aging or other factors may be determined in terms of the standard gage resistance by noting the point on the dial at which balance is obtained. The balance dial is graduated in percentage of tolerance.

The gage to be tested becomes an arm of the bridge circuit. Resistors have been provided in the bridge to accommodate 200-, 400-, and 800-ohm gages. Other sizes could be taken care of by additional resistors in the reference arm of the bridge.

With the balance potentiometer set to center position (zero on the dial), any unbalance of the bridge will be applied to the first tube of the voltage amplifier. The amplified output (60 cycle) of the amplifier is applied to the two grids of the tuning-eye tubes in parallel. Since these tubes have 60-cycle alternating current on their plates, the shadow angle of one or the other of the tubes will change, depending on the phase relation of the grid signals with respect to the plates.

The amount by which the balance potentiometer must be moved in order to return the bridge to balance is a measure of the gage resistance with respect to the standard resistors in the bridge circuit. Balance is indicated by the return of the shadow angles to their original setting. The shadow angles of the 6E5 tubes are usually adjusted as close to zero as possible by means of the 1,000-ohm potentiometers that vary the grid bias of the 6E5 tubes. The check-read switch is turned to the *Check* position for this adjustment to remove the voltage from the bridge.

Resistors R_1, R_2, R_3, R_4, and R_5 are all precision wire-wound resistors whose accuracy is better than 0.05 per cent. These are used as a standard reference. The dial is calibrated by using an additional set of precision resistors with the specified tolerance. The dial divisions represent percentage of deviation from the nominal values of 200, 400, and 800 ohms. This marking was used since the calibration will be same for all three ranges.

Spread of the dial may be varied by adjustment of padding resistors R_6 and R_7. To make this adjustment, the unit must be removed from the case and the dial recalibrated.

In using the test set to check a gage already installed, the gage in question is connected to the proper terminals on the front of the set. If the shadow angle has been properly adjusted beforehand and the dial is at zero, the change in angle, if any, will indicate deviation in resistance from that of the standard. Erratic fluttering of the shadow angles indicates faulty installation.

If the set is to be used for adjusting gages during manufacture, the procedure is the same as above except that the bridge is made to balance by adjusting the resistance of the gage itself. This may be done while the gage is connected in the circuit. The advantage of this method is that the operator may use both hands for soldering and adjusting, while at the same time observing the shadow angle.

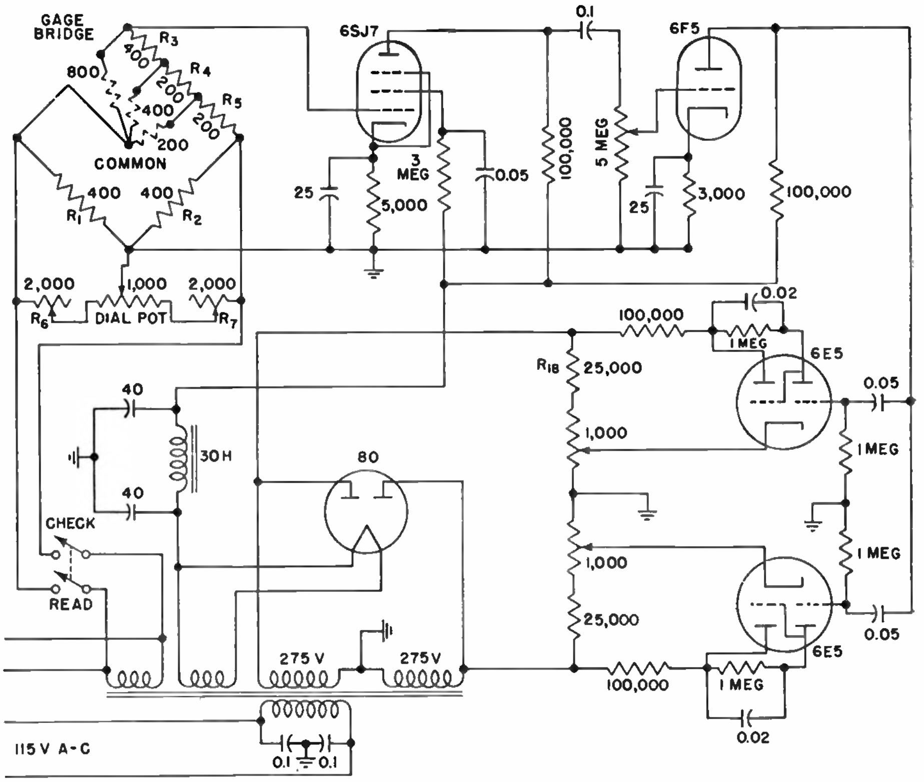

It is possible to hold gages to better than 0.02 per cent of the value of the standard resistors with this method, without sacrificing quantity of production.

E. H. Heinemann, Test Set for Strain Gages, *Electronics*, July, 1944, p. 146.

Wheatstone Bridge with Amplifier and Cathode-ray Indicator for Testing Water Purity

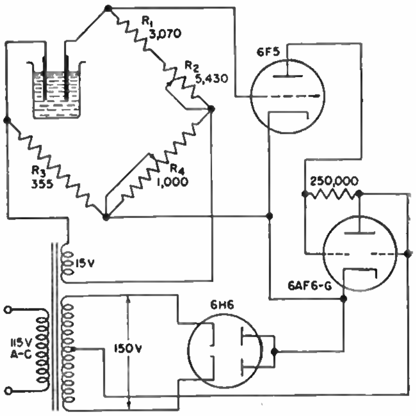

PURITY of distilled water can be read directly in terms of conductivity with this simple a-c Wheatstone bridge arrangement. For convenience the scale is calibrated 0 to 15 parts per million in terms of sodium chloride.

A conductivity cell and the liquid in which it is immersed constitute the unknown resistance. Resistors R_1 and R_2 are the standard resistors, and resistors R_3 and R_4 together with the slider on R_4 form the ratio arms of the bridge. Resistor R_2 is employed for temperature compensation and has a dial marked in degrees. A dial on resistor R_4 carries the concentration calibration.

Voltage for the bridge circuit is derived from a winding on the power transformer. Plate voltage for the operation of the 6F5 amplifier tube and the 6AF6G indicator tube is supplied by the center-tapped 150-volt winding of the power transformer through a 6H6 rectifier tube. The latter is arranged in a frequency-doubler circuit.

The detector junctions of the bridge are connected to the grid and cathode of the 6F5 amplifier tube. Unbalance voltage from the bridge circuit is applied to the grid and cathode of the 6F5 amplifier tube and tends to close the shadow angle of the indicator tube. When the voltage across the detector junctions is zero, the indicator tube is opened to its maximum shadow angle. Throwing the bridge off balance in either direction results in closing the eye.

If the amplifier and indicator tubes were operated at the line frequency instead of twice line frequency, the eye would open if the bridge were thrown off balance in one direction and would close if the bridge were thrown off balance in the other. The frequency-doubling arrangement eliminates this difficulty and at the same time retains the inherent simplicity of a completely a-c-operated instrument.

The conductivity scale of the meter is calibrated from 0 to 15 parts per million and can be read to 0.25 ppm in the range from 0 to 5. The temperature-correction scale has a range from 64 to 190°F.

Water Purity Tester, *Electronics*, December, 1943, p. 162.

Cathode-follower Circuit Permits Use of Tubeless Probe for VTVM

With this circuit, the r-f circuit loading due to the input admittance of the measuring instrument is reduced by employing a cathode follower in the input circuit of a vacuum-tube voltmeter.

The circuit is practically as effective as a vacuum-tube probe and has the advantage of permitting the tube to be located some distance away from the circuit under test.

The cathode follower is fed through a shielded conductor. The shield is not grounded but is connected directly to the cathode of the tube. The capacitance of the shielded conductor thus is added to the grid-cathode capacitance of the cathode follower, but because of the cathode-follower characteristics this total capacitance does not appear as such at the input terminals. The effective input capacitance at the probe terminals is the total capacitance between grid and cathode multiplied by a reduction factor that by proper design may be 0.01.

The circuit is useful at frequencies up to several hundred kilocycles. It employs a type 6SF5 high-mu triode operating with $E_p = 100$ volts, $I_p = 0.4$ ma, and $E_g = -1$ volt.

Circuit constants are $E_b = 200$ volts, $C_g = 1{,}000$ $\mu\mu$f, $R_g = 10$ megohms, $R_c = 2{,}500$ ohms, and $R_L = 250{,}000$ ohms.

The published values of μ and G_m for these conditions are 100 and 1,150 micromhos, respectively, giving a value of $\alpha = 0.013$. The 2-foot length of 60-$\mu\mu$f per foot shielded cable used as an input lead should appear as a shunt capacitance of only $2 \times 60 \times 0.013 = 1.6$ $\mu\mu$f. With total grid-cathode resistance of 5 megohms, the apparent shunt input resistance is $5/0.013 = 380$ megohms.

The measured input impedance of this circuit was found to be approximately 5 $\mu\mu$f in parallel with 300 megohms at frequencies from 1 to 500,000 cycles, the difference between 5 $\mu\mu$f and 1.6 $\mu\mu$f being accounted for as the grid-to-ground capacitance within the tube. The voltage gain is about 0.98.

The chief limitation of the high-frequency operation of this circuit is the cathode-ground capacitance, since this must be considered as shunting the cathode resistor for the purpose of evaluating Z_I. The high-frequency limit evidently may be extended by using a tube having a higher transconductance and requiring a lower value of cathode resistor. The low-frequency limit may be extended by increasing the value of C_g.

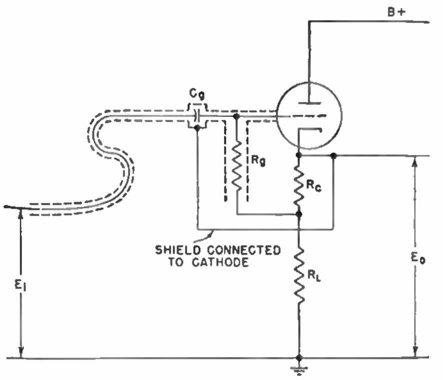

The cathode-to-ground impedance of the tube appears relatively low even for a source impedance as high as several megohms, and hum pickup is much reduced as compared with an unshielded lead. For low-level measurements, a double-shielded cable may be used, the inner shield being connected to the cathode and the outer one to ground. With the double shield, the cutoff value will be constant and independent of location but it will be lower because of the increased cathode-to-ground capacitance.

Howard L. Daniels, Tubeless Probe for VTVM, *Electronics*, February, 1945, p. 125.

Electrometer Circuit Using Type RH507 Inverted Triode

In this circuit, a type-RH507 inverted triode is operated with zero grid current as required for the measurement of currents as low as 10^{-15} ampere and will indicate the presence of 10^{-16} ampere, which represents a flow of about 625 electrons per second. Direct potentials of 0.0001 volt may be measured in circuits having up to 10^{12} ohms resistance.

Use of the outer electrode as the control grid minimizes the space-charge effect, making it possible to select a value of grid bias that will bring the grid current down to zero for any anode voltage employed in the range from 4.5 to 9 volts. Good C batteries may be used for both the grid and anode voltage supplies. An air cell battery or No. 6 dry cells may be used for the filament provided that they are seasoned, because the filament current is critical and must be held constant.

The tube should be mounted in a reasonably tight shielded can containing a drying agent to minimize surface leakage. All leads from the voltage supply should be shielded from stray magnetic or electrostatic fields, and the tubes should be shielded from light to prevent photoelectric effects while readings are being taken. Wherever possible, all leads from the electrodes should be air insulated. Any feed-through insulators used should be quartz glass or a similar material that offers extremely high resistance to surface leakage.

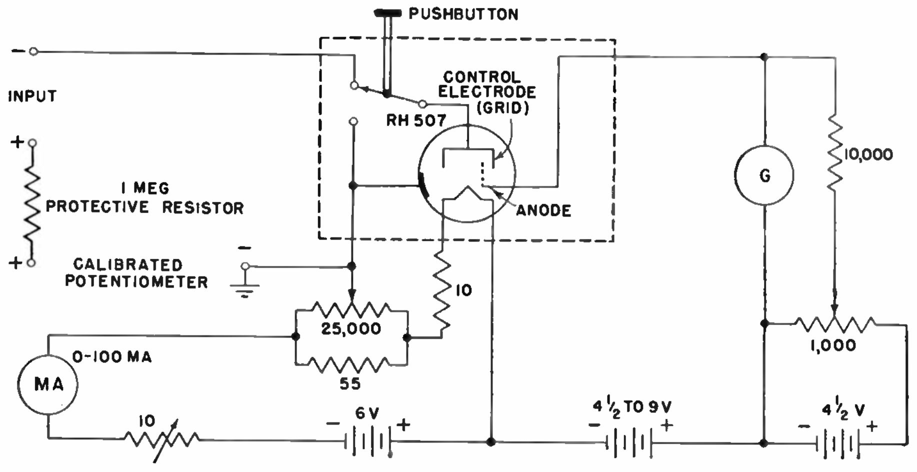

The high sensitivity of this circuit, when used alone or fed into a suitable amplifier, permits measurement of hydrogen-ion concentrations, currents produced by phototubes when subjected to starlight, ion current in mass spectrometers, and other minute quantities that previously required an electrometer or its equivalent.

W. A. Hayes, RH-507 Inverted Triode, *Radio News* (Radio-Electronic Engineering edition), January, 1945.

Sensitive Feedback Voltmeter with High-range Milliammeter

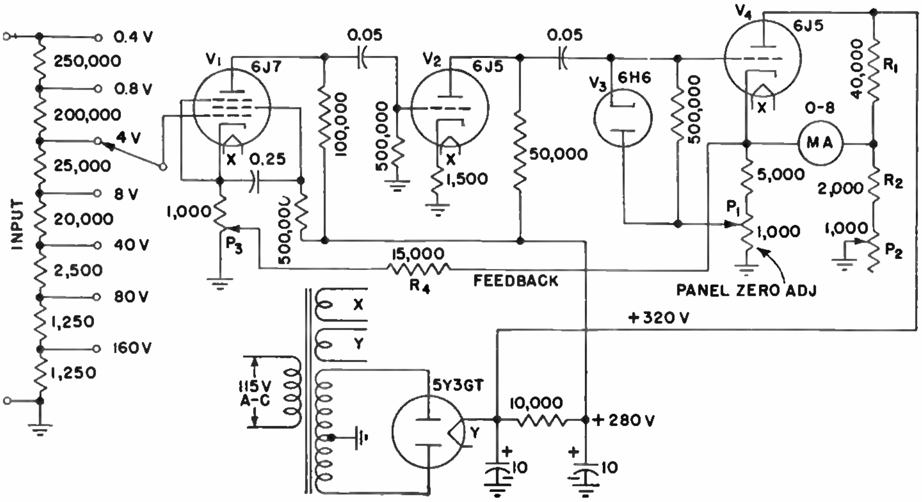

A USEFUL instrument for a-f measurements is the feedback voltmeter, consisting of a resistance-coupled amplifier feeding a diode rectifier and a d-c microammeter. Negative feedback is applied between the output rectifier and the amplifier input stage, to make the whole system stable and linear.

The circuit shown permits the use of an insensitive indicating instrument. The diode is operated into a high-resistance load and followed by a current-amplifier stage operating the indicating meter. Negative feedback is run from the output of the current amplifier back to the input of the first stage.

The voltmeter diagrammed uses a 125-ohm per volt d-c instrument reading 8 ma full scale as the indicating means. With about 22 db of feedback in use, full-scale deflection requires 0.4 volt rms of signal at the input. The relation of input voltage to meter deflection is linear over the whole scale.

Stability is satisfactory for most purposes. The apparent disadvantage of a zero adjustment (absent in the voltmeter's prototype) is not serious in practice. Decreasing the line voltage from 110 to 80 volts shifts the zero reading by one small division, only 2½ per cent of full scale. On the incremental calibration this line-voltage change has no discernible effect. Changing tubes in current-amplifier position V_4 may shift the zero setting by a small percentage of full scale, but readjusting control P_1 readily brings the calibration back to its original value. Changing of other tubes has no detectable effect on the calibration.

With respect to frequency, no variation in response can be read over the range of 40 to 20,000 cycles. (The upper figure was as high as the available test oscillator would go.) Below 40 cycles the meter pointer tends to oscillate with the signal. It will be noted that the signal component current cannot readily be filtered out of the current amplifier because that component is used to supply negative feedback.

Tubes V_1 and V_2 are used as a conventional two-stage amplifier, feeding into diode V_3. The rectified output is applied to the grid of a 6J5, V_4 arranged as a current amplifier. V_4 is operated on the linear part of its characteristic and the no-signal direct current is balanced out of the meter by conventional resistor network $R_1R_2P_2$. The diode is poled so that an increase in signal increases the plate current of V_4.

The feedback circuit extends from the cathode of V_4 through 15,000-ohm resistor R_4 to the arm of potentiometer P_3, which is in the cathode circuit of first stage V_1. The usual blocking capacitor in series with the feedback resistor was omitted to reduce phase shift. Since the output end of feedback resistor R_4 is at a fairly low positive potential, 15 to 30 volts, the bias on the 6J7 is not upset enough to affect its gain.

The zero-adjustment potentiometer P_1 gives a range of adjustment plus or minus 5 per cent of full scale. To locate this range properly, another potentiometer P_2 is adjusted with a screw driver. P_2, being part of a shunt around the meter, affects current sensitivity of the stage considerably more than P_1. The feedback control P_3 is another screw-driver adjustment, covering a range of 15 to 1 in the over-all gain of the system.

Lawrence Fleming, Sensitive Feedback Voltmeter with Rugged Milliammeter Indicator, *Electronics*, April, 1942, p. 88.

Visual Indicator and Automatic Gain Control for Bridge

THIS circuit shows a visual-indicating null detector for use with a General Radio type 650A impedance bridge. The accuracy is approximately the same as with magnetic headphones and no amplifier. The avc action of the single stage gives a logarithmic type of input-output level curve. An auxiliary copper-oxide rectifier W is used across the tap on the output choke T (a push-pull output transformer) to deliver greater current to the indicating instrument. Too much stepdown to rectifier W cannot be used because of the curvature of the rectifier characteristic at low voltages.

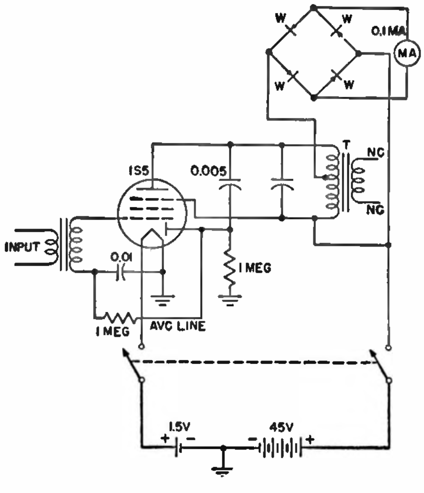

The speed and damping of a 1-ma instrument movement make it more satisfactory than a more sensitive instrument because it is far less fatiguing to the operator than the use of the ear, and is capable of great accuracy if the proper avc characteristics are obtained. A two-or even three-stage amplifier may be necessary. It also is essential to use an instrument with a fast, well-damped movement. The tube filaments can be operated from alternating current for this type of service.

Lawrence Fleming, AVC Amplifiers for Bridge Null Detectors, *Electronics*, January, 1945, p. 198.

Direct-reading Insulation Tester Using Double-triode Circuit

For measuring resistance up to 100 megohms, this circuit operates as a conventional ohmmeter. About 950 volts direct current is developed across four resistors constituting an internal load on the section of the 6F8G tube used as a half-wave rectifier. This voltage is impressed across the insulation under test in series with a current-limiting resistor and the 0 to 1 ma milliammeter. By choosing the series resistor properly, the meter can be calibrated to read directly in megohms.

When measuring resistance between 100 and 5,000 megohms, the triode section of the 6F8G (the section with its control grid connected to the top cap) comes into use. Potentials are applied to the electrodes of this triode section through the voltage divider in such a manner that the grid is biased just beyond cutoff. It will be noted that the high-range jack is connected to the grid through a 2-megohm resistor. Thus, when the high-range jack is connected to the insulation under test, any small amount of current flowing through the insulation and through the 2-megohm resistor makes the grid less negative, causing anode current to flow. Anode current flows through the milliameter, which may be calibrated to read directly in megohms.

The calibration of the instrument is somewhat affected by aging of the 6F8G, and replacement of the tube is usually the solution when the instrument fails to read full scale with the test prods shorted together. Calibration is affected to only a minor degree by differences in the characteristics of 6F8G tubes. Variation in calibration appears to be less than 5 per cent up to 1,000 megohms when tubes are changed.

The simplest manner of calibrating the instrument is to connect known resistances across its terminals and to draw a suitable scale from the resulting readings. Suitable resistors are available up to 20,000 megohms.

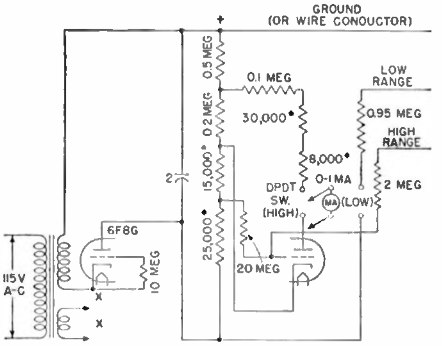

(* SUBJECT TO ADJUSTMENT DURING CALIBRATION)

W. N. Lambert, Direct-reading Aircraft Insulation Tester, *Electronics*, April, 1942, p. 84.

Limit Bridge with Cathode-ray Indicators for High-speed Testing of Components

Suitable for the high-speed testing of capacitors and inductors, the circuit of an electronic limit bridge shown below utilizes a pair of 6E5 cathode-ray indicator tubes for high and low indication. This saves the time that might be lost waiting for a meter needle to come to rest. This instrument, which involves the circuit of a modified Wheatstone bridge as shown, can be used to measure impedances at 60 cycles from 600 ohms to 2.6 megohms, which allows coverage of 0.001 to 4 μf in capacitors and 2 to 7,000 henrys in inductors. Limit dials are continuously variable from 0 to 30 per cent low and from 0 to 40 per cent high, and accuracy is within ±1 per cent of the standard.

Limit Bridge for High-speed Testing, *Electronics*, December, 1945, p. 244.

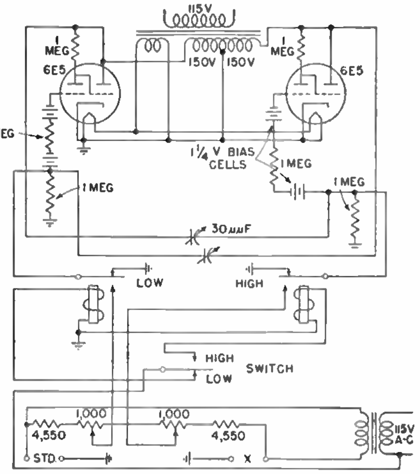

Null Indicator with Regeneration for High Sensitivity

This circuit is useful where a very sensitive null indicator is required, as in the case of a recording potentiometer or of lie-detector experiments in which skin voltage and resistance changes are observed. The circuit shown makes use of controlled regeneration.

The bias in the first tube is supplied by a voltage drop through a resistor in the plate circuit of the second tube. The second tube bias is determined by the plate current in the first tube. Therefore a reduction of negative voltage in the first tube grid will increase plate current and correspondingly increase the negative bias on the second tube grid. This reduces the plate current in the second tube, which produces a corresponding decrease in the negative bias of the first grid.

The additional drop added to the original signal originates a second cycle of bias changes, which further adds to the input voltage to produce the unbalance current indicated by the galvanometer. The sensitivity of the indicator may be increased to a point of instability by changing the adjustments on R_1.

Instability is a factor that is largely dependent on the input voltage. An extremely high degree of regeneration may be used for very small input voltages, but if the input voltage exceeds a critical value for a given adjustment, the plate current will surge out of control.

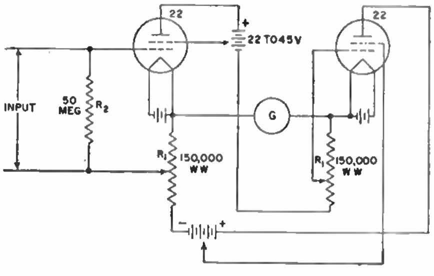

Daniel E. Noble, A Regenerative Null Detector, *Electronics*, June, 1934, p. 190.

Electronic Voltmeter and Ohmmeter with 5-ma Meter

A PRACTICAL electronic voltmeter having a d-c full-scale range in the neighborhood of 1 volt when using a 5-ma meter is shown in the diagram. Voltage ranges from 1.5 to 500 volts are covered with an input resistance of 1 megohm per volt.

The circuit contains a high-transconductance tube with much less degenerative feedback than is usually the case. The circuit is of the bridge type to balance out the initial plate current and to obtain an initial meter reading of zero. In operation, the tube serves as one arm of the bridge, the initial balance of which is upset by the change in the tube plate resistance caused by a change in grid bias as the result of applying a direct voltage to be measured to the grid circuit.

A resistor is used in series with the meter to bring its deflection for 1.5 volts input to the grid to exactly 5 ma. The sensitivity without this resistor is nearer 1 volt for full-scale deflection. A scale can be drawn calibrated directly in volts.

By making the primary range 1.5 volts, it became possible to include an ohmmeter in the instrument rather simply, using a single flashlight cell for voltage supply. This ohmmeter operates upon the principle of measuring the voltage drop across the unknown resistance in series with a known resistance across a known voltage. The scale is calibrated directly in ohms. This feature has proved very convenient for measuring resistance in the megohm range.

Because of the relatively heavy current drain on the power supply for such service (30 ma), it was decided to use somewhat more filtering than is usually the case in electronic voltmeters. This heavy current makes the instrument slow in heating. It takes from 10 to 20 minutes before the slow zero drift is overcome. This has not proved annoying in actual use, since after the first 5 minutes the drift is very slow.

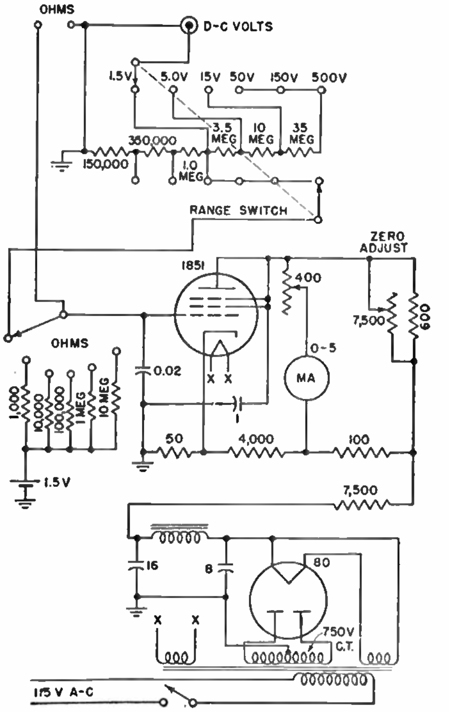

No voltage-regulating circuits have been found necessary. However, tests show that the zero setting shifts an appreciable extent with line-voltage changes. The effects on calibration are negligible (2 per cent or less for ±10 volts in the line) if the zero is corrected. In a locality that had rapid or large line-voltage fluctuations, some form of regulation of the power supply would be necessary to avoid the annoyance of zero shift.

Edward M. Yard, Electronic Voltmeter with 5-ma Meter, *Electronics*, July, 1944, p. 160.

Direct-reading Vacuum-tube Millivoltmeter Using Push-pull Circuit

THE diagram shows the circuit of a direct-reading vacuum-tube voltmeter designed especially for the measurement of biological potentials and which will operate from a 115-volt a-c power line.

The inherent stability is of a high order due to the push-pull circuit that is used. Electrodes are connected to the input grids of two pentode amplifiers. The output circuits of these tubes produce potential changes across their respective loads 180 degrees out of phase. Any plate-supply-voltage variation will be very nearly nullified since both plates will follow the voltage change to nearly the same degree, and thus will have little effect upon the recording instrument. In addition, the amplification of pentodes varies insignificantly with plate-supply potentials. However, the amplification changes markedly with a variation in screen supply voltage. This undesirable characteristic is removed by the push-pull arrangement since both screen grids, varying with a changing supply voltage, will produce amplified signals in their respective plate circuits in phase. Therefore no deflection on the galvanometer that is connected from plate to plate will occur if both tubes produce the same degree of amplification.

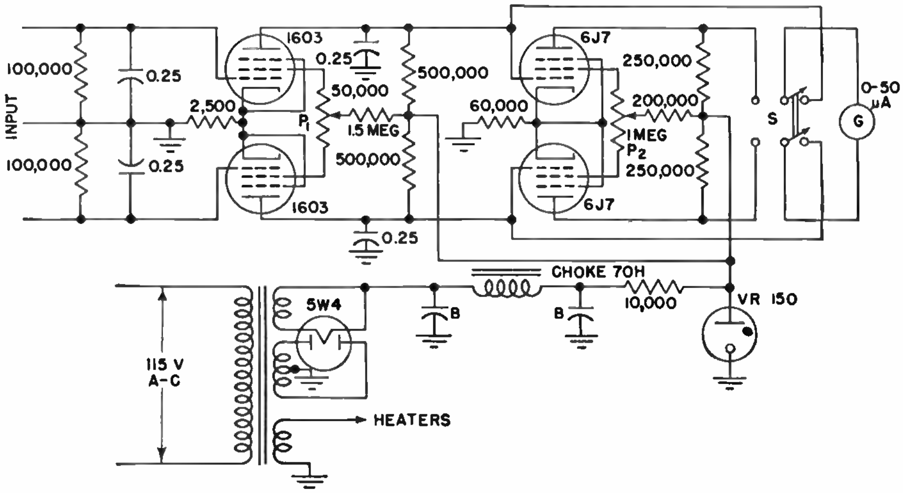

Variations in the a-c line voltage cause filament-current fluctuations that, if of considerable magnitude, will cause slow oscillations of the recording device. This oscillatory motion is ordinarily very slow due to the thermal inertia of the cathode emitter of the modern heater type of tube. However, if it is objectionable, it may be eliminated by drawing the filament current from a separate 6.5-volt compensated transformer.

Walter Lyons and Richard E. Heller, A Direct Reading Vacuum-tube Millivoltmeter, *Electronics*, November, 1939, p. 25.

Four-tube A-C Galvanometer Circuit for Bridge Null Indicator

THE electronic a-c null indicator described here provides high effective sensitivity by a combination of two factors—high optical sensitivity and high electrical sensitivity. It also constitutes a more satisfactory method of detecting balance of an impedance bridge that is used to check incoming electric components.

If balance of the bridge is to be precisely determined, it is almost invariably necessary to determine an increment of minute value. For easiest optical detection, which in turn means greatest accuracy, the incremental angle must be as large a fraction as possible of the initial angle. This condition is realized with an initial angle of zero degrees. In another sense, this arrangement produces what might be regarded as optical amplification.

The instrument is provided with two panel controls, one for sensitivity and the other for indicator bias. The sensitivity control is simply a gain control R_1 in the input circuit of the amplifier, while the indicator bias control is a potentiometer R_5 located in the cathode circuit of the 6E5. If a single variable resistor (or potentiometer) were used here, it could not be turned through its entire range, because minimum bias of about 7.5 volts is needed at all times. The series resistor R_6 developed this minimum voltage, thereby making the panel control useful over its entire range. Variable resistor R_6 is screw-driver adjusted so that minimum bias can be set exactly as required for operation or upon replacement of the 6E5. In practice, it is simpler to use relatively high-resistance potentiometers for R_5 and R_6, shunting them with a lower resistance. For this reason, a 15,000-ohm resistor is connected in parallel with the 50,000-ohm potentiometers.

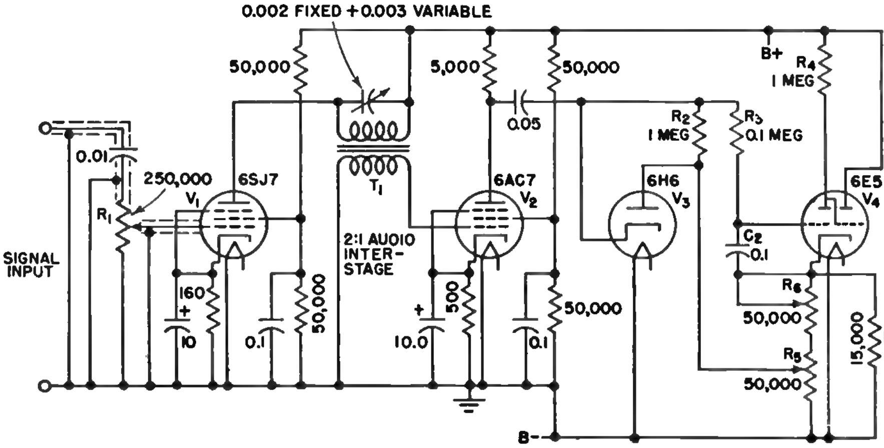

The minimum signal that can be detected is 20 µv. With the sensitivity control set at maximum, zero-degree eye opening can be secured with signals up to some 470 µv by proper adjustment of the indicator bias control.

With minimum bias a signal of about 95 µv will produce a 10-degree eye opening, while with maximum bias this opening is produced by a signal of some 510 µv. By varying the amount of bias, a 10-degree opening will result from the application of any signal between these limits.

Arthur L. Quirk and Henry D. Hall, A-C Galvanometer, *Electronics*, December, 1945, p. 147.

Cathode-ray Tuning-eye Tube as an Electronic Electroscope

A CIRCUIT for making tests of polarity and voltages (within certain ranges) is shown that may be considered somewhat analogous to the old-type electroscope. It has been found useful in experimental work. The circuit utilizes the operation of the shadow angle of 6E5 electron-ray indicator or similar tube.

The 10,000-ohm variable resistor is adjusted to provide a suitable bias on the grid of the tube. It may be adjusted so that if the grid goes negative the shadow angle will close, while if the grid goes positive the angle will open.

If the circuit is to be used in connection with low impedances, the 200-µµf grid capacitor may be eliminated. The purpose of this capacitor is to build up and maintain a charge for an appreciable time for those applications in which the tube is used as an electroscope. If a negatively electrified substance is brought near or into contact with terminal A, the shadow angle will close, whereas when the electrified substance is removed the shadow angle will return to its initial position. Without the use of this grid capacitor, the response of the electron-ray tube will not be sufficiently prolonged to be readily apparent.

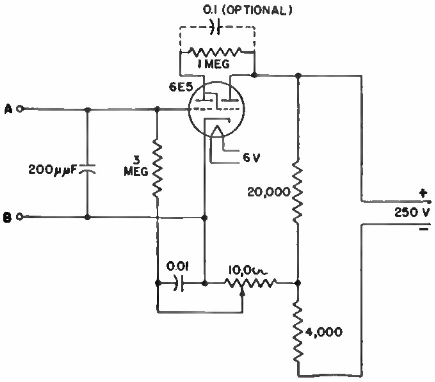

Esten Moen, An Electronic Electroscope, *Electronics*, October, 1941, p. 74.

Electrometer for Determining Polarity for Quartz Crystals

MAGNITUDE and polarity of small direct voltages, such as those produced when a natural quartz crystal is squeezed between two electrodes, are indicated by a microammeter in this simple piezoelectric electrometer having its own a-c power supply. The 6K7 tube used as the electrometer is connected to the remotely located power pack by a shielded cable, in which the plate lead has its own individual shield. Filaments of both tubes are served by the same filament winding on the power transformer, one side of which is grounded. The power supply should be completely shielded.

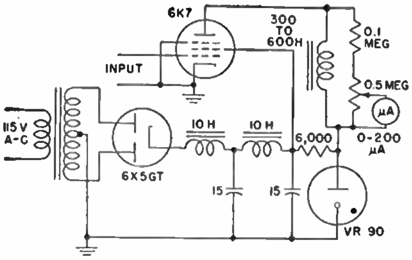

Laboratory Kinks, *Electronic Industries*, August, 1943, p. 99.

Automatic Gain Control for Impedance-bridge Null Detectors

In the use of an impedance bridge it is helpful if the sensitivity is highest near the null point and if overloading can be avoided when the bridge is far off balance. Both of these can be provided by an automatic gain-control circuit in the bridge amplifier.

The two-stage unit shown has been successfully employed with a General Radio 716B capacitance bridge. It permits measurements of both capacitance and loss factor as closely as the dials can be set.

A delay voltage is introduced into the automatic gain-control circuit by a 1.5-volt battery in series with resistor R. The signal voltage from the output tube is coupled by a capacitor to the diode plate of the same tube to obtain the avc voltage.

The avc action is not made flat, because if it were it would not be possible to tell in which direction to turn in order to balance the bridge. This characteristic makes the bridge considerably easier to operate.

Tuned circuits are formed by 0.005-μf capacitors with L_1 and L_2, which have an inductance of about 7 henrys and a Q of 7 at 1,000 cycles. Resistor R between the headphone jack and the tuned circuit permits the use of either crystal or magnetic headphones without detuning the circuit.

Chokes L_1 and L_2 can be improved in Q up to about 20, with a corresponding drop in inductance, by increasing the air gap. The actual inductance of most chokes that are rated at 10 to 30 henrys measures close to 7 henrys at 1,000 cycles. Too high a Q is undesirable.

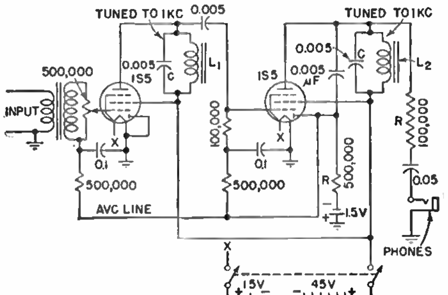

Lawrence Fleming, AVC Amplifiers for Bridge Null Detectors, *Electronics*, January, 1945, p. 198.

Negative-plate VTVM for Measuring up to 5,000 Volts

A high-resistance voltmeter capable of measuring negative voltages as high as 5,000 volts is shown. The voltage to be measured is applied to the plate of a 211D tube, and the grid of the tube forms the output circuit. Since the plate is negative, no current flow takes place in this circuit. The grid is maintained at a positive potential by the power supply, and current flow in this circuit is measured on the milliammeter.

When a tube is used in this manner, the amplification factor is about equal to the reciprocal of the normal amplification factor. The transconductance is small, and large changes in plate voltage result in small changes of grid current.

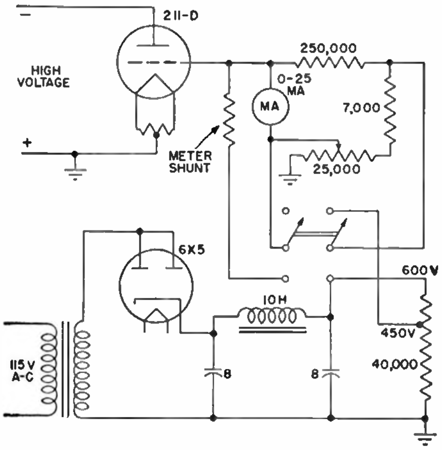

The grid current-plate voltage curve for the 211D is practically linear from 500 to 5,000 volts. For the 0 to 3,000-volt range the current may be read from a 0- to 25-ma milliammeter, or a direct-reading voltage scale may be used on the meter. A shunt is provided across the meter to increase its range to 50 ma when reading 5,000 volts. Zero adjustment is accomplished by the variable resistor in the grid circuit.

At 5,000 volts the current drain from the circuit under test was found to be 10^{-6} ampere and from this the total input resistance from plate to ground was found to be 5×10^9 ohms.

M. Kupferberg, *Rev. Sci. Instruments*, August, 1943, abstracted as Negative Plate Voltmeter, *Electronics*, January, 1944, p. 152.

Vacuum-tube Microvoltmeter for Medical Research

This circuit is a vacuum-tube microvoltmeter, used for measuring extremely small potentials in living-tissue structures during medical research and for determining ovulation time in experiments with artificial insemination.

The mapping of direct voltage gradients in living structures presents many special problems, and it requires an instrument of sufficiently high input impedance to draw a minimum of current from the area under investigation and to be reasonably unaffected by varying resistances.

This Burr-Lane-Nims vacuum-tube microvoltmeter solves these problems. This instrument requires little associated shielding, contains standard radio parts, and is conveniently portable. The circuit is a bridging arrangement using two type 112A radio tubes with a special battery bias supply for the grids, which is adjusted to the floating grid potential. Both tubes have their bases removed.

Associated equipment consists of an accurate galvanometer and reversible silver and silver-chloride electrodes that may be designed for microscopic manipulation.

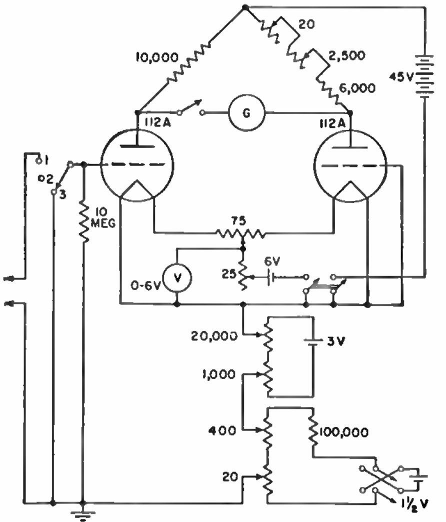

John D. Goodell, Medical Electronic Practice and Research, *Electronics*, April, 1944, p. 96.

Bridge Null Indicator with Visual Phase Indicator

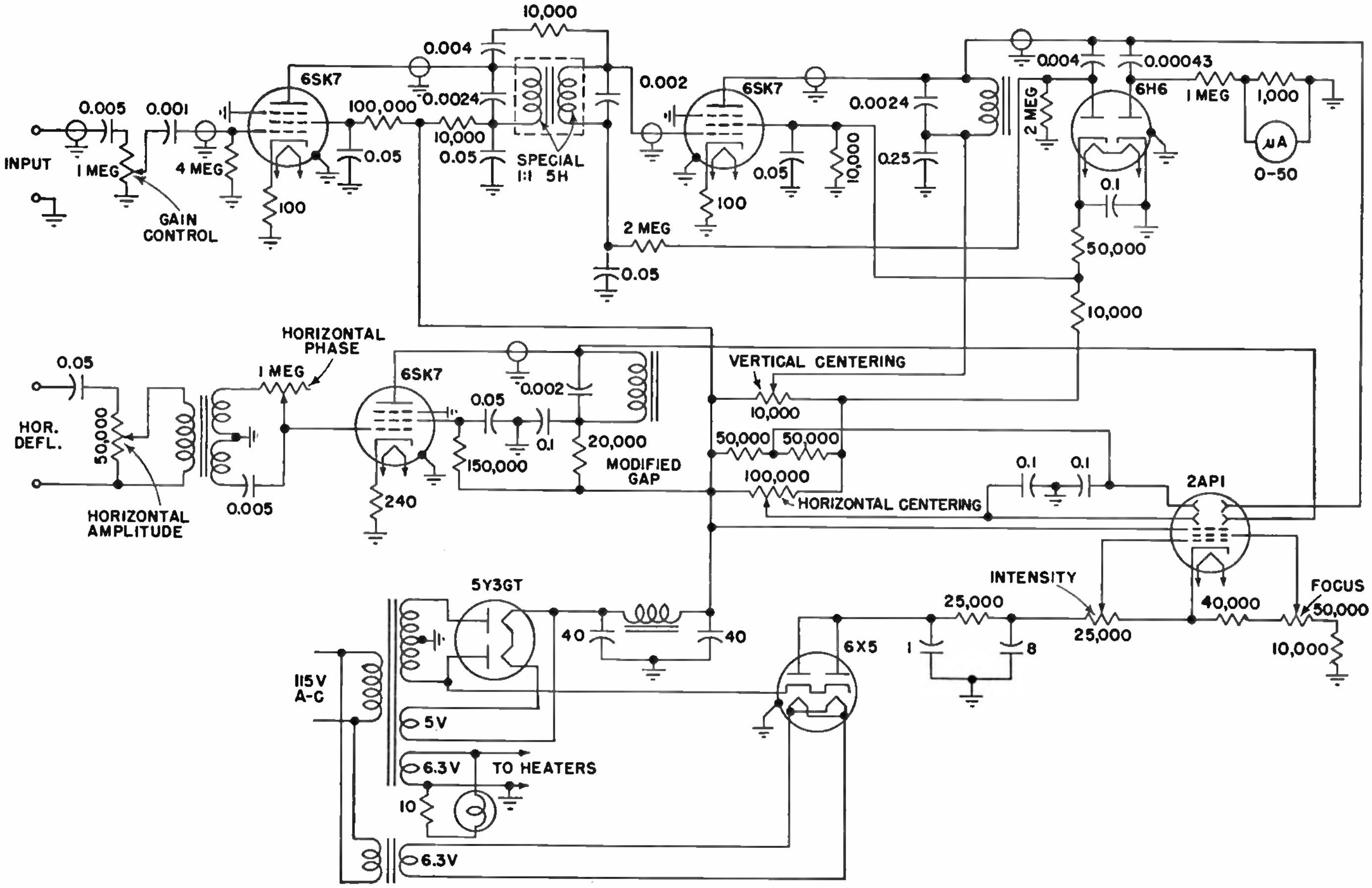

Delayed automatic gain control permits utilization of high sensitivity in this a-c bridge null indicator with visual indication of phase and amplitude relations. The high sensitivity is easily met by a two-stage pentode amplifier. At the same time, a delayed automatic gain control may be used as overload protection for conditions far off balance without destroying the sensitivity at balance. Harmonic discrimination is accomplished by using tuned choke or transformer coupling, while phase is shown by a cathode-ray type of indicator. In addition, a sensitive output meter is a useful supplementary unit.

Input is connected directly to the bridge through a tuned transformer that is a part of the bridge itself, as in the General Radio type 561D. A manual gain control permits reduction of large inputs to below the value that operates the automatic-gain-control circuit. The two-stage 6SK7 amplifier has a special interstage transformer, made by the American Transformer Company, mounted in a mu-metal shield can. For highest Q, about 13 at 1,000 cycles, the interstage transformer tuning capacitance is split between primary and secondary as shown. A first-stage gain of over 500 is obtained. The *RC* series combination, joining the high side of primary and secondary, eliminates high-frequency resonance (around 7,000 cycles) due to the second resonance peak of a double-tuned circuit. The transformer must be correctly poled for this connection to be effective.

The second 6SK7 with a tuned-choke plate load, which has a 1,000-cycle Q of about 5, is coupled directly to one vertical deflection plate of a 2AP1 cathode-ray tube, which serves as an output amplitude and phase indicator. A second indication is obtained by reading the rectified current of one of the 6H6 diodes on the output meter.

The other 6H6 diode, used for automatic gain control, has a positive delay bias of about 100 volts applied to its cathode. The automatic-gain-control voltage is applied to the grid of the second 6SK7 and gives adequate limiting action by a combination of bias variation and plate-circuit overload. The meter shunt is adjusted to give full-scale indication with maximum input.

Horizontal deflection voltage for the cathode-ray tube is obtained through a separate input from the bridge source, and is amplified by a single 6SK7 tube operated with a tuned-choke plate load (a 6SJ7 is now being used here). The cathode-ray tube is operated with its cathode 300 volts below ground through the 6X5 rectifier, thus providing a second anode voltage of 600 volts from an ordinary 300-volt power-supply transformer.

An input of 10 microvolts is sufficient to give an observable indication on either the meter or the cathode-ray vertical deflection. As the input is increased, the indication increases linearly up to about half scale on the meter, at which point the automatic gain control begins to operate. Thus full sensitivity is realized over about half the meter range, and yet the meter can never go off scale.

For phase indication on the cathode-ray tube, a resistive unbalance of the bridge is caused to give a tilted line on the tube by adjustment of the horizontal phase control. An unbalance in the opposite direction is shown by a reversal of slope of the line, and perfect balance by a horizontal line. Reactive unbalance of the bridge causes the cathode-ray pattern to become an ellipse. The output indicating meter may be used as a simple null instrument and also as a quantitative indicator of the relative amount of input voltage to the instrument.

C. W. Herold, Bridge Null-indicator, *Electronics*, October, 1945, p. 128.

10- to 50,000-cycle Direct-reading Frequency Meter

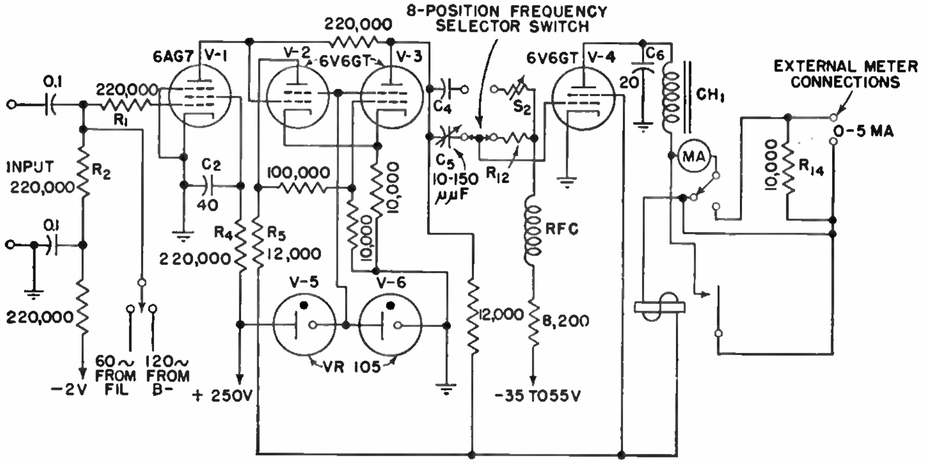

THIS wide-range frequency meter contains a limiter in the input stage for clipping the peaks of a cycle. A square wave results regardless of whether the input frequency is a pure sine wave or one having distortion and irregularities. The input sensitivity is slightly more than 1 volt and the input impedance is greater than 100,000 ohms for most frequencies but not higher than 220,000 ohms, the value of R_2.

The multivibrator circuit formed by V-2 and V-3 is directly connected to the plate of V-1, and is at rest by virtue of the 10,000-ohm resistor. This value is selected to permit the multivibrator circuit to operate at the instant a square-wave voltage is present at the plate of V-1. The multivibrator circuit has no resonant characteristics; its function is to amplify the output of V-1 without alteration.

Amplified square waves are then fed into an *RC* integrating network (C_5, R_{12}, etc.) which determines the amplitude of the pulse that is to appear on the grid of V-4. Capacitors in the frequency-selector circuit are either air-type trimmers or silver-mica types having negative coefficients to minimize calibration drift caused by heat within the instrument.

Operation of the V-4 tube circuit is similar to class C audio amplification. The grid bias is adjusted to zero plate current with no signal input. This circuit functions as a linear amplifier in which plate current changes are directly proportional to grid voltages.

External and panel meters are protected from burnout by a relay in the plate circuit of V-4. The relay shorts the meter when current exceeds 10 ma and releases at about 4 ma. The meter circuit is arranged to permit reading the panel and external meters simultaneously. Accurate frequency indication on the external meter is limited only by the meter itself. If a recorder is used, overshooting and undershooting of the pen (determined by chart paper travel) must be taken into consideration. If the frequency meter is accurately calibrated and stabilized, the inherent circuit error will be less than 2.0 per cent of full scale over the entire range of 10 to 50,000 cycles.

An *RC* network having a long time constant (C_6, CH_1) is incorporated into the plate circuit of V-4. Without the *RC* network, some recorder pens resonate badly at 100 to 130 cycles with the selector switch (S_2) set on 100- or 500-cycle positions. External meters having a 5-ma movement and a coil resistance not exceeding 1,000 ohms may be used without recalibration. A 10,000-ohm external meter-damping resistor R_{14} was chosen as an optimum value and accommodates most recorders without affecting calibration.

For frequency calibration, 60 cycles at 6.3 volts is obtained from the filament leg of the transformer and 120 cycles at 2.5 volts comes from the B-minus leg of the full-wave power rectifier through a 47-ohm resistor. The calibration switch is normally open (center postition) as shown. Selector switch S_2 is placed on the 100- or 500-cycle range when making a calibration check.

The frequency meter has been used to measure a-f differences in quartz crystal manufacturing, to determine pulse frequencies, function for gamma-ray, X ray, and electron counting, to determine a-c line frequencies for power- and audio-transformer design, and to measure temperature-coefficient drift on transmitters and receivers operating under test temperatures of from −40 to 200°F.

W. R. Strauss, Frequency Meter for Use by Factory Personnel, *Electronics*, May, 1945, p. 150.

Direct-reading Frequency Meter Using Gas-filled Triodes

FREQUENCIES up to 7,000 cycles can be read on a d-c meter with this circuit. Tubes *A* and *B* are grid-control rectifiers connected in an inverter circuit, whose frequency is controlled by the signal applied across the input terminals. When tube *B* is nonconducting, capacitors *C* and C_m associated with tube *A* are charged to the voltage existing across resistor *R*, while capacitor C_m associated with tube *B* remains uncharged. When in response to the signal at the input terminals the grid of tube *B* is made sufficiently positive to make tube *B* conduct, the potential of the cathode of tube *B* rises abruptly.

Since the charge across capacitor *C* is not dissipated immediately, the cathode of tube *A* is charged positive with respect to its anode and tube *A* is extinguished. At the same time both anodes of the double-diode *D* become positive because of the charge on capacitors C_m and as a result current is delivered to the microammeter in series with the cathode of the double diode.

The average current delivered to the microammeter is directly proportional to the number of pulses delivered to it per second, and therefore the indication of the instrument is proportional to the frequency of the input signal. This proportionality can be extended over wide limits within the audible range, the upper limit depending upon the capacitances *C* and C_m. The essential limitation is the ionization time of the thyratrons.

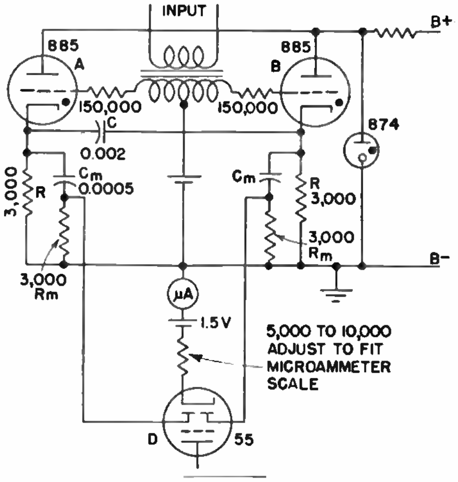

A High Speed Direct-reading Frequency Meter, *Electronics*, July, 1935, p. 224.

Circuit for Measuring Inductance of Filter Chokes while Carrying Direct Current

INDUCTANCE of filter chokes having direct current flowing through them can be determined by this circuit. It consists essentially of a two-tube positive feedback oscillator with a resonant LC circuit in the plate of the second amplifier tube. The reactor to be tested forms part of the LC circuit and the resonant frequency is compared with the 60-cycle power-supply frequency.

Resistor R_1 controls the amount of feedback applied to the grid of tube VT_1. The bias of second amplifier tube VT_2 is controlled by resistor R_2, which thus controls the plate current drawn by this tube and the current through the reactor L. Resistor R_3 is a variable control that enables the a-c component across the reactor to be varied. The alternating voltage built up across the reactor is applied to one set of plates of the oscilloscope, and a voltage obtained from the 60-cycle power supply is applied to the other set of plates.

For measurement, resistor R_2 is set so that meter M reads the required value of direct current in the reactor. Resistor R_1 is then adjusted so that the positive feedback is just sufficient for oscillations to occur across the combination of inductor L and capacitor C. Accurate adjustment of this feedback control is required to avoid overloading of VT_2 with consequent wave-form distortion. The variable capacitor C, which might be a decade box, is then adjusted until a stationary circular or elliptical pattern is obtained on the oscilloscope. This indicates that there is a constant phase relationship between the two frequencies applied and that the frequencies are identical. The inductance may then be determined from a reactance chart or by calculation from $L = 1/\omega^2C$, where $\omega = 2\pi f$ and f is the power-line frequency.

Resistor R_3 is adjusted to give the required magnitude of the a-c component across the inductor. This latter may be measured with a vacuum-tube voltmeter. As R_3 is decreased, the Q of the LC circuit drops, with a reduction of the alternating potential across the inductance or cessation of oscillations. The oscillating conditions may be restored by adjustment of R_1.

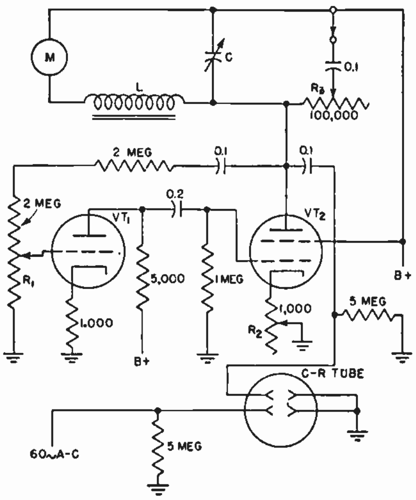

The current through the reactor may be increased to any desired value by operating tubes in parallel with VT_2 or by the use of a larger amplifying tube. For ease of reading, the capacitor decade box may be calibrated directly in terms of inductance.

L. R. Malling, Measurement of Filter Chokes, *Electronics*, May, 1944, p. 184.

Determining Inductance with a Negative-resistance Oscillator

VALUES of inductance commonly employed in communications circuits may be measured accurately in terms of a calibrated capacitor with this circuit. The inductance is made a portion of an oscillator circuit that generates a frequency dependent upon the LC constants of its input circuit.

A portion of the power from the output of the grid circuit of the oscillator is fed to the tuned circuit of a vacuum-tube voltmeter whose resonant frequency is known. The calibrated capacitor of the oscillator is then varied until maximum current is found to flow in the plate circuit of the resonance indicator. From this indication and the calibration of the instrument dials, the unknown inductance can be determined.

The two 6F6 oscillator tubes provide a negative resistance between terminals A and B. Therefore any resonant circuit connected between these terminals will be forced into oscillation at its natural frequency of resonance. Frequencies as high as 75 mc can be obtained with such a circuit arrangement.

If a calibrated capacitor is connected between terminals A and B and a coil of unknown inductance is connected between terminals A' and B', the value of self-inductance can be determined from the calibration of capacitor C_c and the frequency at which the oscillator operates. The calibrated capacitor is thus used to measure inductance and its dial is marked Inductance.

The distributed capacitance of the coil will be in parallel with that of the calibrated capacitor and will introduce a slight error that may be eliminated by making measurements at two different frequencies. The two 0.01-μf series capacitors have sufficiently large capacitance so that they will not introduce appreciable error. Capacitor C_o is an index adjustment that is useful in setting the zero of the instrument when a coil of known inductance is connected across terminals A' and B'. The range of measurements can be extended by changing the LC constants of the resonance indicator.

In the vacuum-tube-voltmeter resonance indicator, a high-Q tuned circuit is connected between the grid and cathode of the tube. A powdered iron-core coil of high Q in a shielded metal case with its distributed capacitance provides resonance at 1.7 mc. A tap on this coil at 20 μh is connected through a 2.5-mh coil to the mid-point of the grid resistors of the oscillator tubes. This loose coupling between the oscillator and vacuum-tube voltmeter ensures that the resonance of one circuit is not affected by that of the other. The resonant frequency may be lowered by the capacitors that are selected by range switch SW_2.

Voltage from the grid circuit of the oscillator is fed to the tapped coil of the voltmeter. When the oscillator frequency corresponds to that of the detector, the detector plate current will be at its maximum. In this way resonance between the two circuits is easily ascertained from the indication of the milliammeter.

The operation described is that for the switch on position 1. When the switch is thrown to position 5, an additional fixed capacitance is added to the distributed capacitance of the coil. This additional capacitance is so adjusted to tune the grid circuit to 340 kc. Since the frequency is now one-fifth of the value of that with SW_2 on point 5, the instrument will measure inductances of five times that measured in position 1.

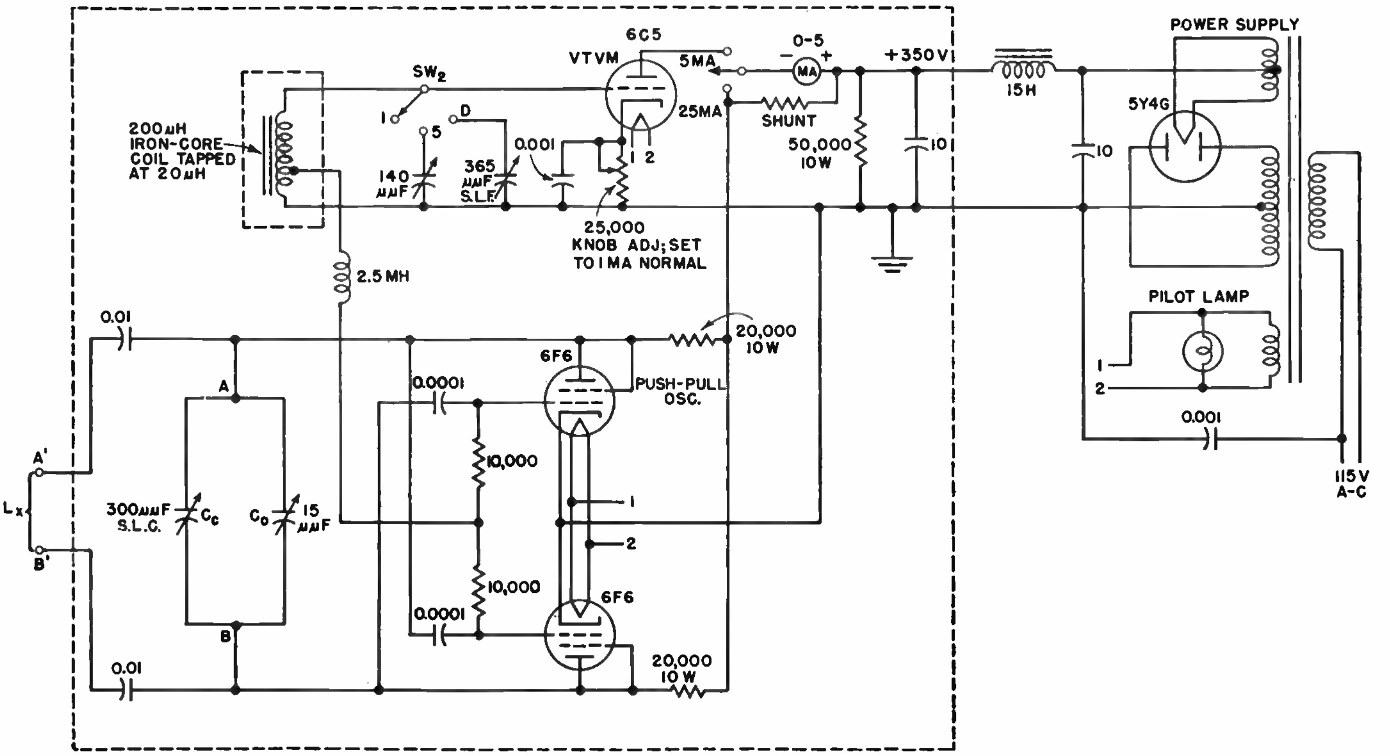

For the third position of the range switch *D*, a variable capacitor, is connected in parallel across the 200-μh coil; this provides for a continuous range of resonant frequencies, and hence of multiplying factors. The dial of this variable capacitor is calibrated in terms of multiplication. With this switch on position *D*, the inductance of the coil inserted at *Lx* is determined from two dial settings. First, it is necessary to determine the inductance from the calibration of standard capacitor C_c, after which it is necessary to multiply this value by the multiplication factor of the dial marked Frequency, which controls capacitance C_c.

Capacitor C_o is used to determine the zero setting when coils of known inductance are connected at *Lx*.

Normally the milliammeter reads plate current of the resonance indicator tube. However, by depressing the pushbutton at the left of the meter, the total plate current of both oscillator tubes may be read on the same meter. In this case the meter has a full scale range of 25 ma.

Eugene Mittelman, Inductance Bridge for Communications Circuits, *Electronics*, February, 1944, p. 139.

Test Circuit for Checking Activity of Quartz Crystals

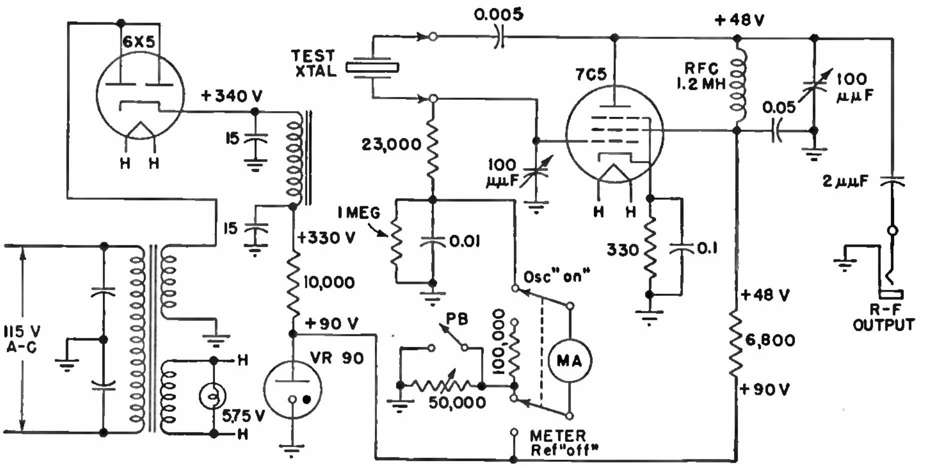

The quartz-crystal test circuit shown is so designed that its input characteristics are approximately the same as those presented to the crystal by the crystal oscillator in the radio equipment. Thus frequency and activity (r-f voltage) requirements for the crystal are duplicated to a high degree of accuracy by the test set.

The oscillator circuit is of the Pierce type. The test set is a-c operated, with d-c voltage regulation. The oscillator tube is operated far below its nominal d-c plate and screen voltages; likewise, the heater is operated at subnormal voltage. Because of these reductions in operating points, tube aging and burnout are minimized.

The stability of both the voltage regulator and the resistors involved in the meter-reference circuit was extremely important, since a given resistor value was to be set up at any time to an accuracy of ±5 microamperes, in terms of direct current on the activity meter. Circuit variations ordinarily considered as very small therefore became quite important. A switching circuit permits checking the operation of the VR90 tube at any time against a B+ reference value. The meter reference value, established by a variable resistor in the oscillator grid circuit and the constant B voltage, simultaneously established the proper activity correlation for the particular crystal involved.

W. E. McNatt, Test Set for Quartz Crystals, *Electronics*, April, 1945, p. 113.

Feedback Amplifier for Iron-core Reactor Measurements

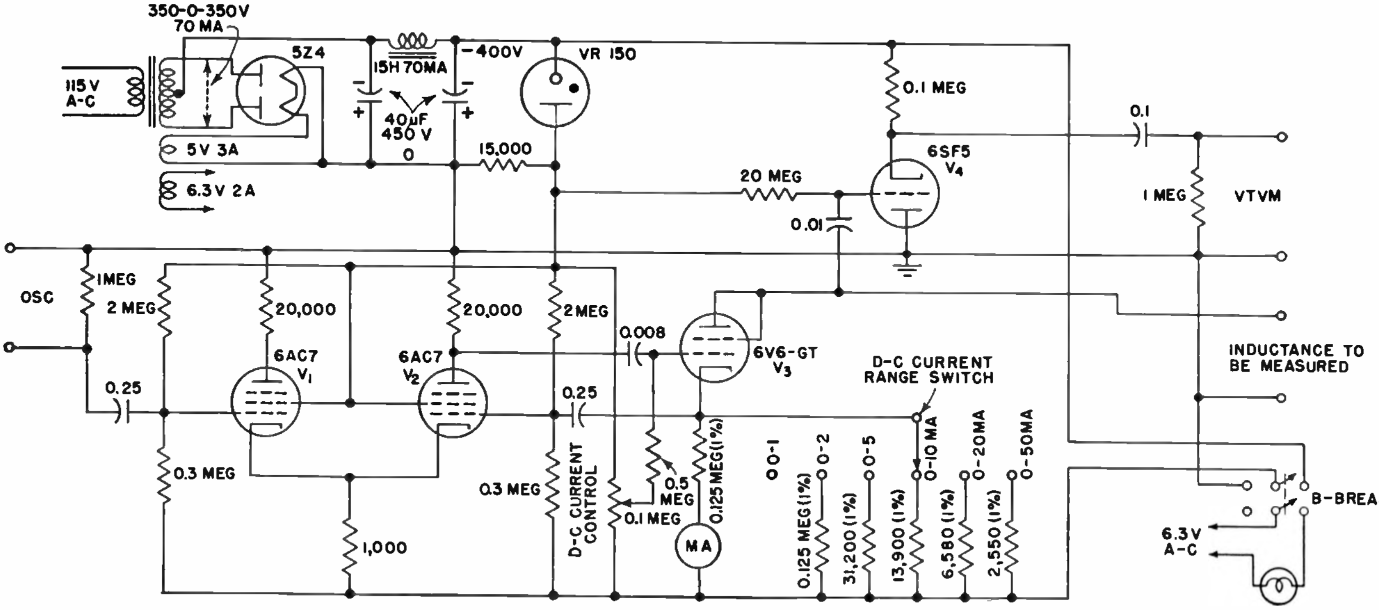

Reactor measurements can be made by feeding an oscillator into an amplifier having current feedback to create a high-impedance signal source. From the output stage of the amplifier a resonant circuit containing the saturable-core inductor can be fed both alternating and direct current for measurement of the inductor's electrical parameters.

A vacuum-tube amplifier circuit that is well suited for nearly all measurements of this type in the frequency range of 20 to 100,000 cycles is shown. This circuit provides direct current that is continuously adjustable from 0.3 ma to 50 ma, with an a-c output impedance between 2.5 megohms and 90 megohms, depending on the selected current range. High a-c output impedance is achieved by application of a large amount of current feedback.

The output stage V_3, through which both saturating current and test signal are applied to the inductance, is a triode-connected 6V6GT. The direct current is controlled by a range selector switch, which inserts various fixed resistors in series with the cathode, and a potentiometer, which permits the d-c voltage between the grid and B− to be varied continuously from 0 to 150 volts. A milliammeter is provided in the cathode circuit of V_3 to indicate the direct current.

The test signal is injected into the circuit through the cathode of V_2, which is coupled directly to and driven by the cathode of V_1.

A double triode might be substituted for V_1 and V_2 with appropriate circuit redesign but only at a sacrifice in output impedance or high-frequency response, or both.

The buffer stage is a cathode follower that prevents the input impedance of the external vacuum-tube voltmeter, or oscilloscope, used in tracing the parallel-circuit impedance curve, from loading the parallel circuit—and hence affecting the results of the measurement. The total stray capacitance from the plate of V_3 to ground is limited to about 15 μμf by this means, and the added shunt resistance is about 500 megohms.

The grounding of B+ rather than B− provides some protection against shock while manipulating the coil under test. As an additional safeguard, a switch is provided which breaks B−, and also operates a pilot light to indicate its position at all times. Whenever the d-c coil circuit is to be broken, this switch is first operated to protect the operator from the negative supply voltage.

Reactor Measurements, Howard L. Daniels, *Electronics*, October, 1945, p. 146.

Oscillator and Constant-current Generator for Inductance and Capacitance Measurements

Useful measurements of resonant frequency, inductance, capacitance, and Q can be made with a calibrated oscillator (90 kc-25 mc) driving a pentode amplifier. For practical purposes, the amplifier can be considered a constant-current generator in which the developed resonance voltage is proportional to the Q of the load. The amplifier and accompanying diode are mounted inside a probe.

A panel control is provided to introduce a bucking potential to the diode in slide-back-voltmeter fashion, although no absolute voltage measurements are made. When the bucking potential is equal to the peak r-f voltage, zero bias appears on the grid of the 6E5 tuning indicator, which is thus made just to close at resonance over a wide range of load Q. In addition a spst toggle switch is provided to reduce the bucking voltage to 71 per cent of its initial value, which permits determination of the off-resonance points where the developed voltage has dropped to 71 per cent of maximum resonance value.

The positive terminal of the instrument power supply is grounded. This conveniently permits the cold end of the resonant circuit to be at ground d-c potential.

Panel binding posts are provided for connecting an external vtvm to the probe diode for more accurate Q measurements. Also, there is provision for connecting to the oscillator tank circuit an external variable capacitor for making small incremental changes in frequency. This is useful in testing frequency-discriminator circuits.

In determining the resonant frequency of a tank circuit, the tank is connected across the measuring terminals of the

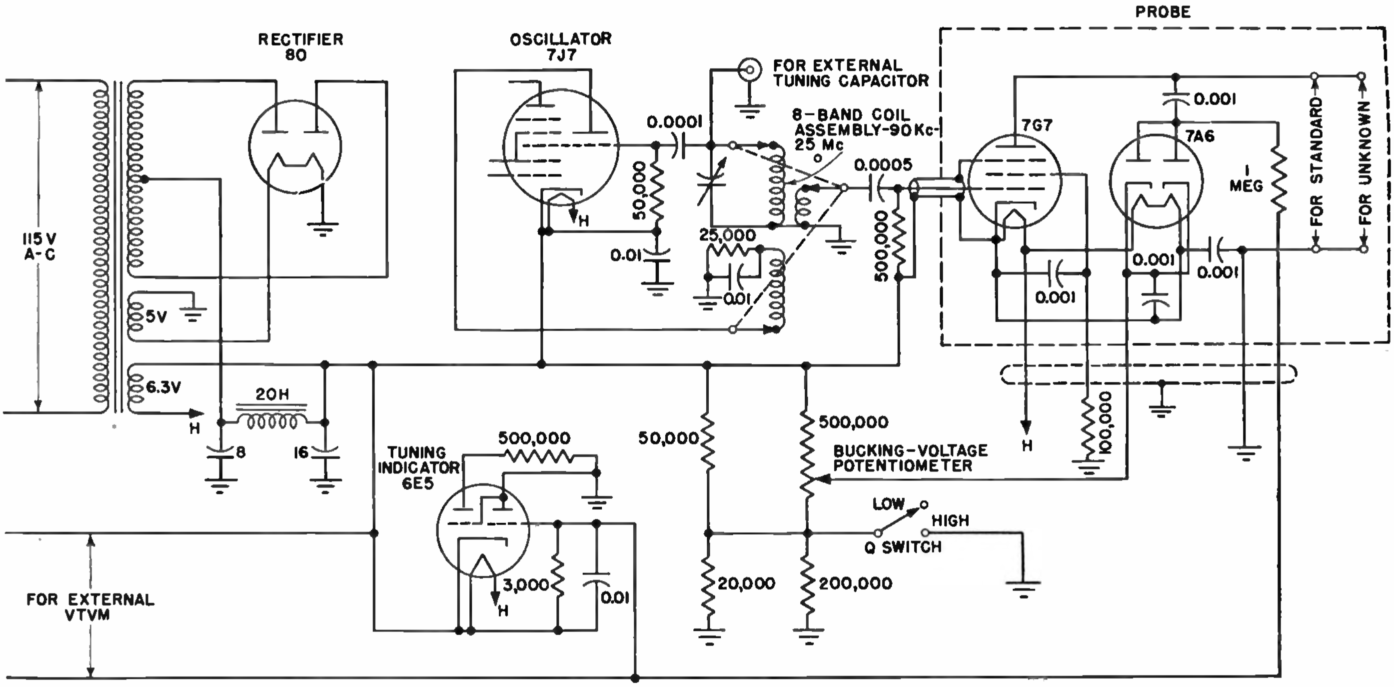

probe, and the oscillator is adjusted for resonance as indicated by the 6E5. Since the pentode will act as a frequency multiplier, resonance will be indicated at harmonics of the tank fundamental; but this is not objectionable because the developed tank voltage is always greater at the fundamental frequency.

Capacitance can be measured by connecting a standard tank and the capacitor to be measured across the measuring terminals. With the particular oscillator ranges used, a 456-kc i-f transformer with an additional shunt capacitance serves as a standard tank.

The i-f transformer padder is utilized as a zero positioner for the capacitance scales. It is advisable to calibrate the capacitance scales against a standard Q meter or some other capacitance standard, rather than by computation based on the inductance and total capacitance of the standard tank.

Inductance measurements are made in a similar manner by using a fixed capacitance standard.

Determinations of Q can be roughly made by using the frequency-variation method.

G. Zaharis, Circuit Constant Checker, *Electronics*, October, 1944, p. 118.

Frequency-measuring Circuit Serves as Electronic Tachometer

ONE solution to the problem of measuring the speed of a motor operating at low angular velocities, as low as 5 rps, is to couple to the motor armature shaft the rotor of a clock-type synchronous motor (without gearbox) and thereby secure an a-c generator whose frequency (and hence speed) can be measured with the accompanying frequency-meter circuit. A motor speed of 5 rps will generate an open-circuit voltage of the order of 0.5 to 1 volt rms depending on the direction of rotation and on the condition of the permanent magnets in the clock motor.

The first two stages of the circuit form a square-wave generator. The only requirement here is that the output wave maintain its extreme values over an appreciable fraction of a cycle and that these values be independent of input voltage, input frequency, line voltage, and tube characteristics. The last stage is a diode integrator having in one plate lead a microammeter that measures the average current through the 1-megohm resistor and gives a scale calibration that is approximately linear with frequency as long as the product fC_2R is very much smaller than 1.

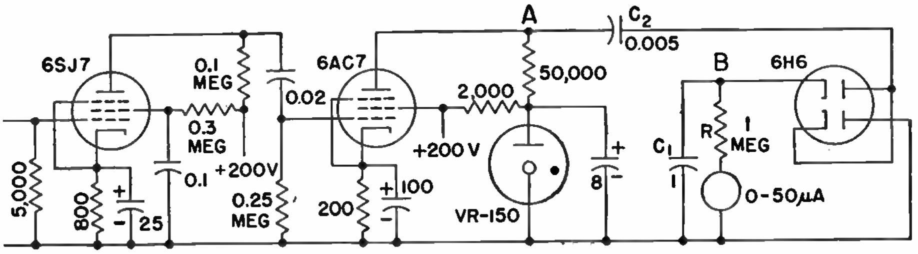

To understand the operation of the diode integrator, assume steady-state conditions, with point B having a constant potential V_1. If point A is swinging between V_{max} and V_{min} in synchronism with the multivibrator action and hence with the output frequency of the clock motor, the charge on C_2 when A attains its maximum value is $C_2\ (V_{max} - V_1)$. As the potential of A decreases in time, C_2 discharges through the lower diode until the charge reaches the minimum value of C_2V_{min}. Now as the potential of A increases, C_1 will charge again through the upper diode and the average current through R and the meter will be proportional to the input frequency. The VR tube ensures independence of line-voltage fluctuations up to 15 per cent. The accuracy of this frequency meter is apparently better than 2 per cent.

P. H. Miller, Jr., Variable Speed Motor and Electric Tachometer, *Rev. Sci. Instruments*, December, 1944, p. 348.

Test Circuit for Measuring Speed and Acceleration of Gyro Rotors

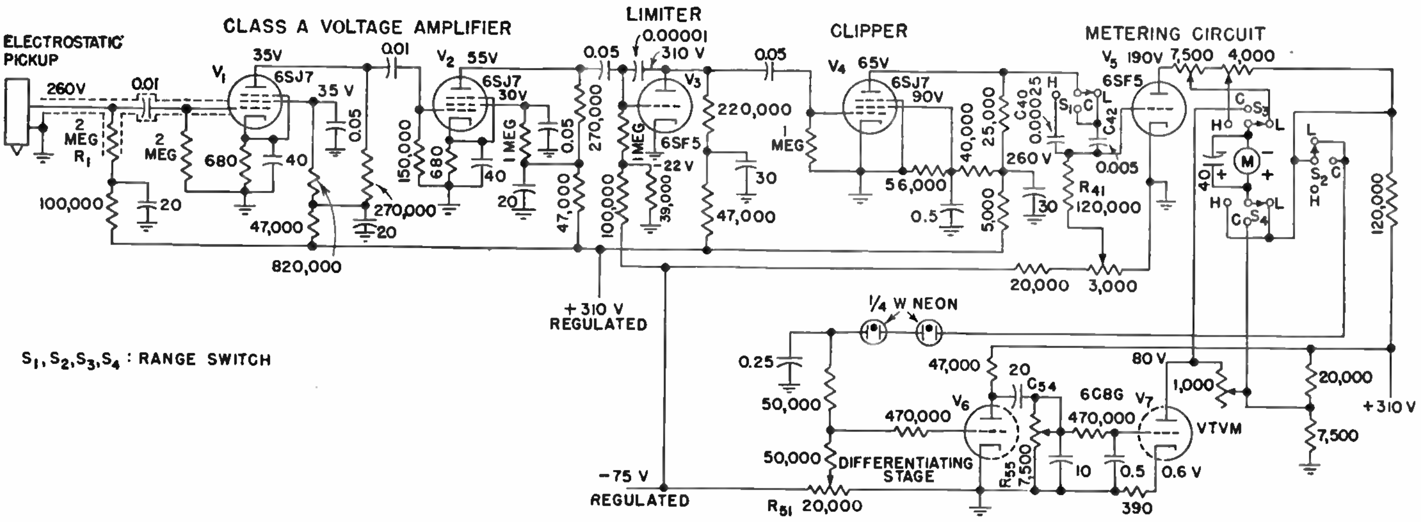

THE output of an electrostatic pickup mounted alongside a rotating object, such as a gyro rotor, is converted by this circuit into meter readings proportional either to speed or acceleration of the rotor, as desired. When combined with a vibrometer arrangement, a gyro test unit is obtained that is invaluable in adjusting and testing rotor assemblies in a minimum of time.

The tachometer channel consists of a two-stage class A voltage amplifier, a class C limiter amplifier, which provides additional gain and introduces some limiting action, a saturated class C square-wave clipper whose output is essentially a rectangular wave, and a class B metering-circuit amplifier that produces a series of sharp pulses or peaks of plate current.

The output of the tachometer is fed to a range switch. When this switch is on position *L* or *H*, the tachometer is connected to an indicating meter that averages the energy of the pulses from the metering circuit and reads low or high values of rotational speed. The number of pulses is proportional to the speed of the gyro rotor; hence the meter indication is also proportional to gyro-rotor speed.

When the range switch is placed on position *C*, the output of the tachometer is fed into the accelerometer, which measures the rate of change of rotational speed. The accelerometer consists of a differentiating circuit whose output is proportional to the acceleration rather than to the speed of the gyro rotor and a vacuum-tube voltmeter, or amplifier, whose plate circuit feeds the indicating meter.

The rotor constitutes one electrode of the electrostatic pickup, while the second electrode is a small probe. As the rotor buckets (or vanes) pass by the probe, the change in capacitance between the probe and the vanes causes a displacement current to flow through series resistor R_1 and to develop across it the input signal voltage for the amplifier.

The fixed grid bias of the limiter stage is adjusted to approximately four times the cutoff value. The limiter blocks out extraneous voltages, thermal agitation, and other noise when no input is applied from the rotating gyro. The saturated class C clipper produces a rectangular wave shape whose amplitude is independent of the input signal amplitude, provided that the input from the electrostatic probe pickup is greater than 2 millivolts. The metering stage further modifies the signal received from the clipper to form a series of sharp pulse waves of plate current, all having uniform height.

A fixed negative voltage somewhat greater than cutoff is applied to the 6SF5 metering tube V_5. When a signal is applied, negative peaks merely make the grid more negative, while positive peaks cause the tube to draw pulses of plate current.

The time constant of the input circuit to V_5, consisting of R_{41} and either C_{40} or C_{42}, is short, so that the coupling capacitor becomes fully charged at a time interval which is short compared with the period of pulses from the gyro rotor. Therefore the current that flows through resistor R_{41} reaches its maximum value, and x drops to zero in a period of time less than the shortest half cycle of the input signal. A pulse of voltage is produced by the surge of current through R_{41}, and this is applied to the grid of V_5. Pulses in a positive direction cause V_5 to draw plate current, while pulses in a negative direction are eliminated by the fixed cutoff bias. Since the pulses of grid voltage are complete before the end of any half cycle, plate-current pulses will all be the same in magnitude; but there will be a larger or smaller number of them per unit time, depending upon the speed of the gyro rotor.

With the range switch set on position *L* or *H*, the output of V_5 in the metering-circuit amplifier is connected to the indicating meter, the reading of which is proportional to the integral or average value of the plate-current pulses. Since these pulses are of constant amplitude but vary in frequency, the meter reading will also be proportional to the frequency and may be calibrated in terms of revolutions per minute.

With the switch on position *L*, the meter indicates speeds of from 160 to 400 cps, or 400 to 1,000 rpm, for a rotor having 24 buckets. With the switch on the high position *H*, frequencies from 2,000 to 6,000 cps, or speeds of 5,000 to 15,000 rpm, may be measured.

Since the output of V_5 is proportional to the frequency of rotation of a gyro rotor, a differentiating circuit is required to produce a reading proportional to acceleration. The differentiating stage is intended to detect the slow change in plate voltage of V_5 encountered when a gyro rotor coasts.

For such low frequencies, any reasonable coupling capacitor would introduce a serious error in the response of the differentiating stage. Therefore direct coupling is required, and this is accomplished by means of two neon glow lamps connected in series.

The voltage drop across a glow lamp is nearly independent of the current through it, within certain limits. This characteristic of the glow lamp makes possible a reduction of 120 volts in the absolute value of the voltage from the plate of V_5 to the grid of V_6 without altering the magnitude of the voltage change.

The voltage derived from V_5 through the glow lamps is positive with respect to ground. It is applied to the grid of V_6 in series with a negative voltage derived from the supply. The value of this negative voltage is adjusted by means of R_{51}, so that the grid voltage is minus 0.5 volt at 500 rpm, or minus 6.5 volts at 1,000 rpm of the gyro rotor. Thus the plate current of V_6 is relatively high at low rotor speed and low at the higher rotor speed of about 1,000 rpm. As a result, the voltage on the plate of V_6 is proportional to the rotor frequency.

Capacitor C_{54} and resistor R_{55} constitute the differentiating circuit, so that the grid voltage applied to V_7 is proportional to the deceleration of the rotor. The signal voltage applied to the grid of V_7 is proportional to the voltage across R_{55}, or to the current that flows through capacitor C_{54} and resistor R_{55}. If the resistance of R_{55} is small compared with the capacitive reactance of C_{54}, the current through these two circuit elements is proportional to the time rate of change of the voltage across the combination. However, this voltage is the varying plate voltage of V_7. The grid voltage on V_6, therefore, is proportional to the rate of change of the plate voltage of V_6, which is proportional to the speed of the gyro rotor. Hence, signal voltage on V_7 is proportional to deceleration of the gyro rotor.

The coast-time amplifier V_7 is a vacuum-tube voltmeter operated at low plate voltage. With no signal applied to its grid, V_7 draws sufficient plate current to cause the indicating meter to read approximately full scale. The voltage developed across R_{55} by a decelerating rotor is negative and therefore reduces the plate current drawn by V_7. The amount by which the plate current of V_7 is reduced is determined by the voltage developed across R_{55}, which depends upon the rate at which the gyro rotor is decelerated.

Two rectifier-filter type of voltage supplies, one a negative supply for bias purposes and the other a high-voltage supply for all plate voltages, are needed.

The voltage of the bias supply is controlled by a VR75 regulator tube, while critical plate voltages are regulated by two VR150 tubes in series.

An Electronic Tachometer, Accelerometer, and Vibrometer, *Electronics*, June, 1944, p. 100.

Direct-reading Frequency Meter Using Vacuum Tubes

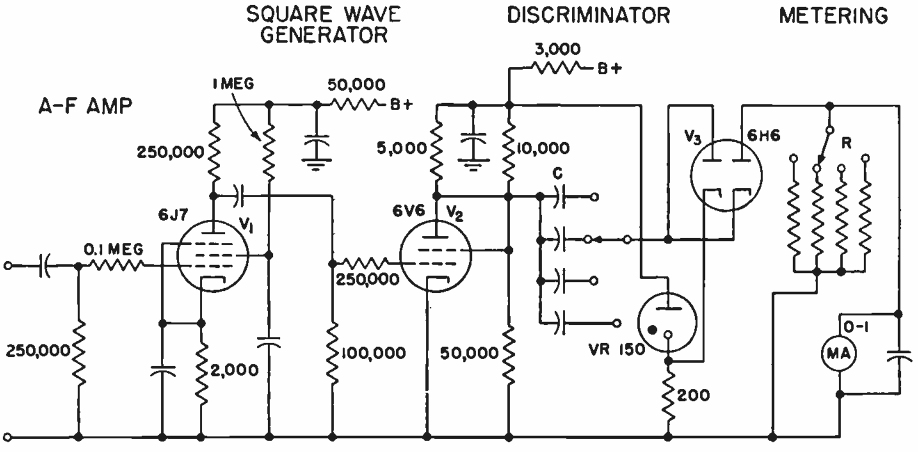

By converting an incoming signal to a square wave by means of an overbiased vacuum tube and then using the square wave to charge a capacitor, audio frequencies can be measured directly on a d-c meter. The circuit is shown in the accompanying diagram.

The 6J7 amplifies the incoming signal. The 6V6 is driven beyond cutoff and to saturation, thereby producing a square wave. A bank of capacitors and corresponding meter shunts provide the various frequency ranges. The 6H6 separates the charging and discharging currents of the capacitor so that a d-c meter can be used for frequency indication. The meter is placed in the plate circuit of one diode to permit bucking out the tube contact potential.

The basis for C and R for each range is that $(1/2fRC) > 4.6$. With this design limitation and the circuit values given, the meter is linear within 2 per cent for input voltages from 1 to more than 300 volts rms. If, because of harmonics or other distortion, the input signal falls below 1 volt during a half cycle, the meter will read high. Because of changes in cathode emission of the duodiode, the meter reading varies with power-supply voltage. This variation is approximately 2 per cent for a 10 per cent change in power-supply voltage. As designed, the meter has ranges in multiples of 100 and 300 cps. Each range is from 0 to its upper limit. The highest range is 30,000 cycles. The meter current will be $I < (V/2R4.6)$ in milliamperes. The output voltage V from the 6V6 is 125 volts with the circuit constants shown. A meter having a full-scale deflection of 1 ma was used in the interest of mechanical rigidity, since the instrument was made for portable use.

Direct-reading Audio-frequency Meter, *Electronics*, January, 1945, p. 264.

Inductance Bridge for Measuring and Recording Liquid Flow

Variations in the inductance of a pickup coil with movements of a rotameter plunger inside the coil are measured and automatically recorded with this electronic circuit. By using a coil having an increasing number of turns from bottom to top, an inductance change is obtained that is linear with displacement of the small soft-iron cylinder as it moves up and down inside the rotameter to take a height that is at each instant a function of the liquid flow.

High sensitivity in the presence of a coil resistance of about 800 ohms calls for a high audio frequency to energize the bridge circuit; yet the frequency cannot be so high that capacitance effects due to proximity of other bodies are objection-

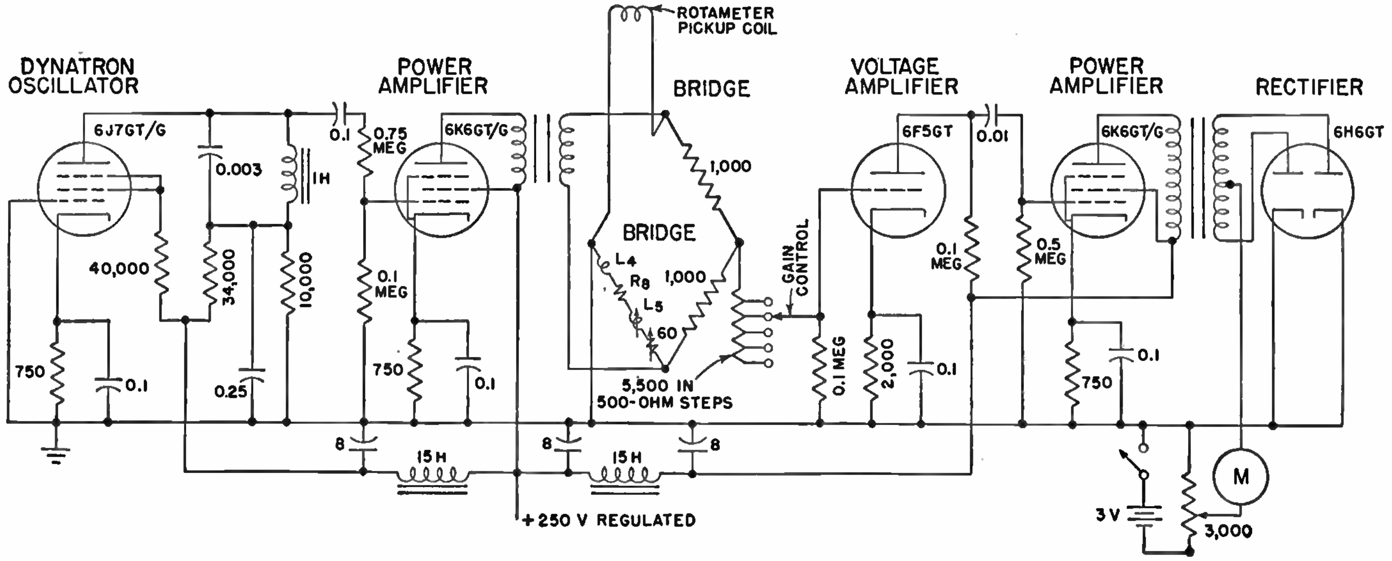

able. A satisfactory compromise is 3,000 cycles, generated by a dynatron oscillator employing a 6J7 tube with screen and suppressor grids tied together to give the tube a negative resistance portion in its characteristic curve. The 3,000-cycle signal excites a single-stage power amplifier to supply the bridge, in one leg of which is the rotameter pickup coil. Here R_8 is 30 ohms less than the resistance of the pickup coil, L_4 is slightly less than the pickup-coil inductance, and L_5 is a trimmer inductance.

The bridge output is amplified in a single-stage voltage amplifier followed by a power amplifier and a full-wave rectifier that feeds the series-connected 0 to 1 ma indicating milliammeter and 0 to 7.5 ma mirror-type milliammeter of the recorder. A voltage-regulated power supply is required for plate voltages. Slow changes in output owing to variation of tube-cathode temperatures are prevented by supplying the entire circuit with power from a saturated-core type of regulator. A small bucking battery is needed in the meter rectifier circuit to offset emission of electrons from the 6H6 cathode and to make the meters read zero when no signal is applied.

Although this circuit was designed primarily for biological applications, its stability, reproducibility of calibration, small size, and ease of operation make it useful as a general laboratory tool. Flow ranges from less than 1 ml per minute to 200 ml per minute can be measured with the original equipment.

E. C. Crittenden, Jr., and R. E. Shipley, An Electronic Recording Flowmeter, *Rev. Sci. Instruments*, December, 1944, p. 343.

Direct-reading Power-factor Meter for Currents from 0.1 to 10 Amperes

Designed for either 150- or 250-volt lines, the circuit shown permits power factor to be read directly on a meter scale with high accuracy.

If calibrated dials are attached to the rheostat in the plate circuit and to the variable shunt, it is possible to determine the voltage and current in the circuit, and, knowing the power factor, the power in watts drawn by the load can be easily determined. The instrument thus serves as a combined voltmeter, ammeter, power-factor meter, and wattmeter.

A transformer with a center-tapped secondary and a ratio of about 1:80 is required. The magnetizing current of the transformer should be small so that the primary voltage of the grid transformer is nearly in phase with the load current even at small values of load current. The primary winding has 150 turns and draws a magnetizing current of 7 ma at 0.5 volt rms. The secondary of the grid transformer has a total of 12,000 turns and an equivalent secondary impedance of about 90,000 ohms.

A constant voltage must be developed across the variable shunt within the full operating load-current range used. For a minimum of 0.1 ampere and a maximum of 10 amperes, a minimum resistance of 0.5 ohm and maximum of 5 ohms are required on one control. To provide uniform variation of voltage along the control, a tapered rheostat giving small changes of resistance at the large current and large changes of resistance at the small current end is required.

In operation, with the switch in the E_{adj} position, the $I_{d\text{-}c}$ meter is in parallel with the 1-ohm shunt and the grid is shorted to the cathode. With the switch in this position, the rheostat in the plate circuit is adjusted until $I_{d\text{-}c}$ reads full-scale deflection. With the switch in the I_{adj} position, the $I_{d\text{-}c}$ meter is connected with the proper polarity across the copper-oxide rectifier cell and the variable shunt is adjusted until the meter assumes some position that indicates a predetermined voltage drop across the variable shunt. This last adjustment is not critical, for if the instrument is used on a 120-volt line and calibration was made with an rms voltage of 21 volts on the grid, doubling the grid voltage would cause an error equivalent to only 2 degrees, while halving the grid voltage would produce an error equivalent to only 5 degrees. If the switch is released to its normal center position, the $I_{d\text{-}c}$ meter is again placed in parallel with the 1-ohm shunt and the reading on the meter indicates the power factor of the load. Whether readings should be taken on the lead or the lag scale is determined by the position of the lead-lag switch.

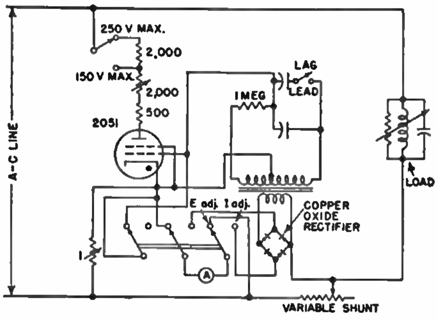

A. B. Bereskin, Power Factor Meter, *Electronics*, October, 1941, p. 38.

Measuring Velocity of Wave Propagation in UHF Transmission Lines

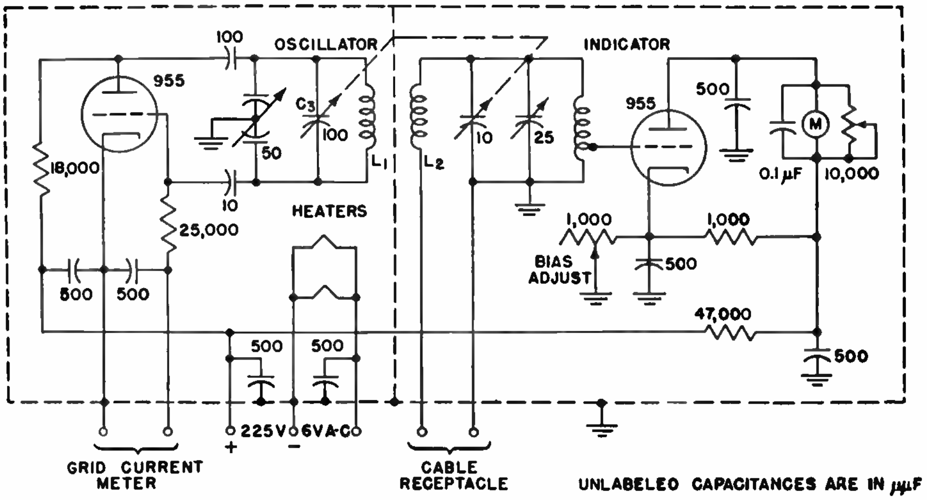

The velocity of electromagnetic wave propagation in a prepared sample of solid dielectric uhf transmission line can be determined in about 10 seconds and to an accuracy of 2 per cent with the oscillator-indicator circuit shown. This test is useful in transmission-line manufacture as a method of quality control, and is essential in determining lengths of solid dielectric tuning stubs for impedance matching and in other applications where exact physical lengths of line must represent exact electrical lengths.

Operation is based on the fact that two coupled resonant circuits will resonate at the same frequency if the transmission-line section inserted in one circuit acts as a short circuit. This will occur only when the frequency of the generator is such that the electrical length of the transmission line is exactly an odd number of quarter wavelengths. Oscillator and indicator tuning capacitors are ganged together and the tuning dial calibrated in megacycles over the usable range of from 95 to 105 megacycles.

The transmission-line sample being measured is cut exactly 150 centimeters long, and under these conditions the relative velocity of propagation is equal to two-thirds the frequency in megacycles. It is only necessary to insert the prepared end of the sample transmission line, adjust the tuning dial for maximum reading of the 100-microampere meter, and read the frequency directly on the dial. If desired, the dial can be calibrated directly in relative velocity of propagation.

The inductor L_1 is loosely coupled through an electrostatic shield to inductor L_2 in the vacuum-tube voltmeter circuit serving as indicator. Padding capacitors are provided in each circuit to obtain close tracking throughout the frequency range. Calibrated test samples of cable should be kept on hand for checking the accuracy of the instrument from time to time. These can be solid dielectric lines pulled into tight-fitting copper tubes and sealed, the tube serving as the outer conductor.

B. Kramer and Fred Stolte, Measurement of Velocity of Propagation in Cable, *Electronics*, July, 1946, p. 128.

Converting Frequency Variations into Current Variations

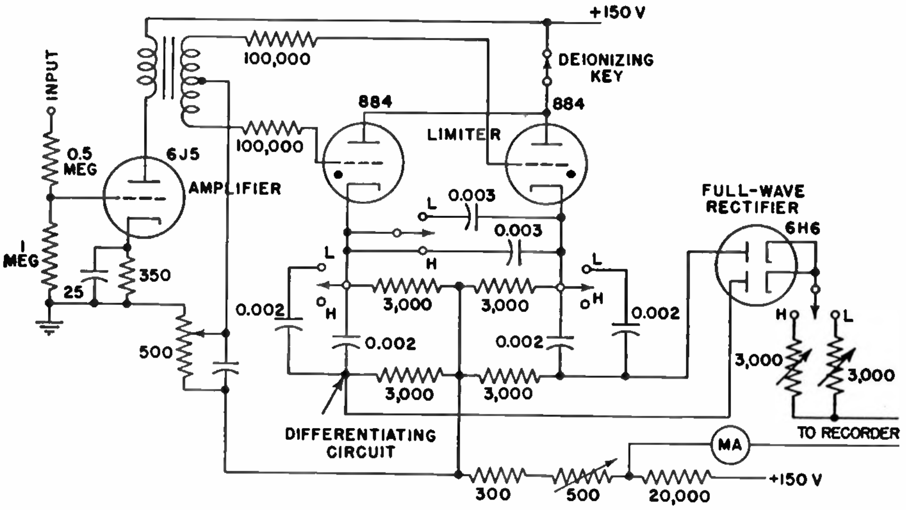

This circuit will convert a frequency shift into a proportional change in current for operation of a conventional recorder. It is useful where motions of a few millionths of an inch or equally small variations in other quantities are applied to the elements of a tuned circuit to produce large changes in frequency proportional to the original changes.

The oscillators utilized in this type of electronic measuring equipment generally operate at a relatively high frequency, such as 4 megacycles, and are used in conjunction with a crystal standard that differs from the measuring oscillator by an audio value, so that a beat note is produced. It is this audio frequency, varying linearly with the quantity being measured, that is fed into the accompanying frequency-current converter circuit. This circuit delivers a maximum current of 500 microamperes to the recorder if a 2,000-cycle tone is being applied to its input with switches set at the *L*, or low-frequency, position. Lower input tones produce proportionally lower output current. On the *H* range, maximum output current is obtained for a 4,000-cycle tone.

Conversion is achieved by amplifying the beat frequency with a 6J5 triode, then passing it through a limiter that clips off all amplitudes above a certain level in both positive and negative directions with a pair of 884 thyratrons in a push-pull arrangement. The resulting square wave is passed through a differentiating circuit that recognizes only the voltage changes as the square wave reverses its polarity. The resulting series of constant-amplitude pulses has a frequency equal to the original frequency, so that when rectified in a full-wave circuit and smoothed out in a filter, the resulting current is directly proportional to the input frequency.

Recording Frequency Drift, *Electronic Industries*, February, 1944, p. 116.

Direct-reading Interpolation Oscillator for Frequency Measurements

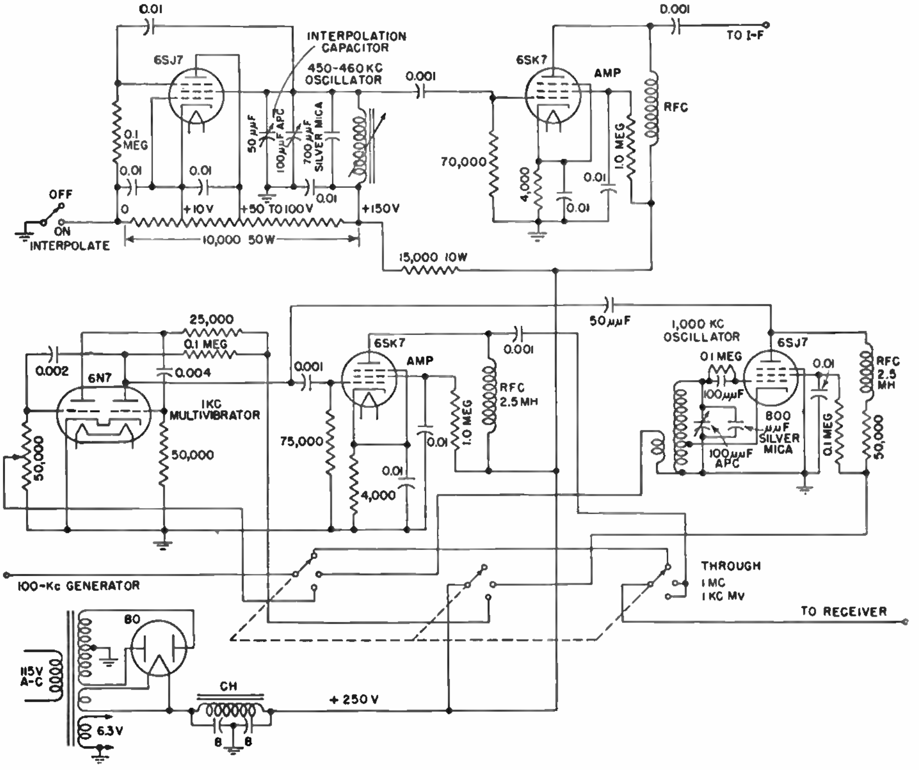

Precision readings between the 10-kc points given by a secondary frequency standard are provided by this interpolation oscillator. It is similar to an accurate beat-frequency oscillator of a communications receiver and has a frequency range somewhat more than 5,000 cycles plus or minus the intermediate frequency of the receiver with which it is used. The standard must have 100-kc output as well as the 10-kc multivibrator output.

The 1,000-kc oscillator in the circuit is used for checking frequencies above 20,000 kc. This oscillator is arranged so that it is controlled by the 100-kc output of the standard.

The 455-kc oscillator is tuned by means of a combination of a silvered-mica capacitor, whose stability is very high, especially with respect to temperature, and a variable iron-core inductance. These two in the plate circuit of the 6SJ7 oscillator, in combination with the 100-μμf air padder and interpolation capacitor, complete the basic parts of the interpolation oscillator. By means of the variable air padder and the variable inductance the range of the interpolation oscillator may be precisely adjusted while keeping the middle frequency the same as that of the intermediate frequency of the receiver.

It is assumed the receiver dial can be read to within reasonable limits and that the approximate frequency of the station to be measured is known. For instance, a station is known to be operating on about 2,512 kc. The station is tuned in and the 10-kc multivibrator is switched on. The dial of the interpolation oscillator is set at midscale, and the interpolate switch is thrown on. A beat note will be heard in the receiver. The receiver is tuned to exact zero beat at 2,510 kc with a harmonic of the multivibrator. During this operation it is desirable to remove the incoming signal to avoid confusion of beat notes. The plate switch is thrown off and the station is received again. A beat note will be heard. This beat will be the exact difference between 2,510 and the operating frequency of the station measured. This difference can be measured by tuning the interpolation oscillator to zero beat. If the station is on exactly 2,512 kc, the dial will read +2 kc (100 degrees). Each division of the dial is 40 cycles. If the frequency should happen to be 2,508.5 kc, the dial would read −1.5 kc (or 187.5 degrees). To check back, turn off the received signal, turn the multivibrator on, and see if the zero beat checks back at 150 degrees or the zero calibration mark of the interpolation oscillator.

D. Reginald Tibbetts, Direct Reading Interpolation Oscillator, *Electronics*, October, 1941, p. 35.

Portable Radiation Meter Using Subminiature Electrometer Tubes

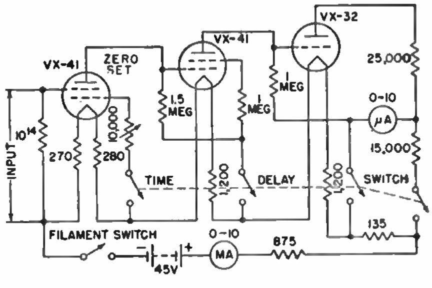

This battery-operated circuit for indicating the intensity of low-level ion-producing radiation, such as X rays and emanations of radioactive materials, was designed as a sensitive portable radiation meter. The ionization chamber in the input circuit of the first Victoreen VX41 tube consists of a cylindrical metal tube with very thin walls and with a center electrode mounted coaxially and insulated from the shell. A potential of 45 volts between these two is sufficient to collect all the ions produced in the chamber by the low-intensity radiation that this device was designed to measure. The third tube in the circuit, the VX32, was designed specifically as a current amplifier to operate a meter.

One 45-volt B battery supplies both plate and filament current for the entire amplifier, at a total drain of somewhat less than 11 ma. The use of a single battery simplified the replacement problem tremendously. In the actual instrument, the On-off switch carries a battery test position whereby it is possible to set the filament current at exactly 10 ma; when this can no longer be done, the battery is replaced.

This radiation meter measures the rate at which radiation strikes the ionization chamber. The higher the radiation, the greater the number of ions produced, the greater the current through the high input resistor, and the greater the voltage across it.

C. D. Gould, Subminiature Electrometer Tube, *Electronics*, March, 1947, p. 106.

Single Diode Circuit Serving as VHF Wattmeter up to 500 Megacycles

NEED for an accurate and convenient method of measuring r-f power at frequencies ranging from 100 to 500 mc and powers ranging up to 100 watts is met with this one-tube vhf wattmeter circuit. Pulse power of the order of kilowatts may be conveniently measured if the pulse rate is made low for output power tests.

The power-carrying transmission line is for measuring purposes terminated in a purely resistive load. Power dissipation in the resistor is found from a voltage measurement with the diode circuit. The capacitive input of the voltmeter must then be compensated to obtain effective resistive termination of the transmission line.

The termination can be a type of ½-watt carbon resistor that has brass end caps and is contained in a ceramic case. The length of the carbon mix between brass caps is 0.5 cm, the diameter 0.3 cm.

On the assumption of a resistor of 50 ohms with these dimensions, the resistance per centimeter cube would be 7 ohms and the skin depth 0.6 cm. The skin effect may thus be neglected as we can expect substantially uniform current distribution.

Knowing the current distribution enables us to determine the inductive effect of the resistive rod, which has a value of 0.001 microhenry or an inductive reactance of 2.5 ohms at 500 mc. Thus the terminating impedance gives a standing-wave ratio of 1.05 on the transmission line. Sufficiently accurate power measurements may be made when the standing-wave ratio is less than 1.1.

The 9005 diode, having a resonant frequency of 1,500 mc and a voltage rating of 117 volts maximum, makes a peak diode voltmeter for the measurement of voltage across the resistor. Allowing for socket and stray capacitance, a value of 1 $\mu\mu$f may be assumed as the input capacitance of this diode. The mismatch due to this capacitive reactance may be neutralized by a corresponding inductive reactance.

The shunt capacitive reactance may be converted to an equivalent series reactance of 3 ohms at 200 mc, for which the equivalent inductance is 0.002 microhenry. Difficulties in making a completely noninductive connection to the transmission line are now avoided as we may leave a short length of the inner conductor equivalent to this value for making the connection to the resistor. With RG8/U 50-ohm concentric cable, having a 7/21 copper conductor, the length of conductor is approximately 0.5 cm from the end of the cable to the resistor.

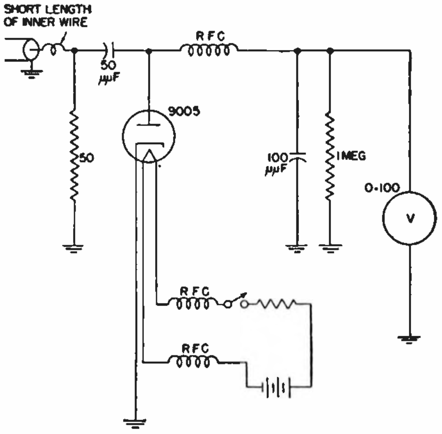

With a high-resistance load, 1 megohm, and a small r-f bypass capacitor of 100 $\mu\mu$f, the meter reading will indicate peak voltage across the terminating resistor. Because of electron transit time and internal diode resonance, the meter indication at 500 mc will be a few per cent low, with correspondingly less error at lower frequencies.

Leonard R. Malling, VHF Transmitter Power Measurements, *Electronics*, February, 1947, p. 158.

Capacitance Tests for High-speed Sorting of Mica Capacitors

A DIRECT-READING capacitance tester that was developed for sorting mica capacitors within the range 100 to 1,200 $\mu\mu$f is shown. The unit possesses the qualities needed for production test equipment as it is small and compact, simple to use and to service, and supplies sufficient accuracy for the purpose for which it was intended.

The method used for the evaluation of capacitance is the measurement of the alternating current flowing through the capacitor from a substantially constant voltage source.

The diagram shows a 6J7 tube connected as an electron-coupled oscillator operating on a frequency of 25 kilocycles. The output of this oscillator is taken by means of a wire-wound potentiometer to the terminals of the capacitor under test. In series with this capacitor a 1,000-ohm resistor is connected to ground. Across the 1,000-ohm resistor, a half-wave copper-oxide rectifier and a 0 to 1 d-c milliammeter are used to give a measurement of the current flowing through the resistance by measuring the voltage across it.

The milliammeter scale is calibrated in 100-$\mu\mu$f steps from 100 to 1,200 $\mu\mu$f. Toward the end of the scale there is a tendency for the 100-$\mu\mu$f steps to be closer together than on the 0–500 $\mu\mu$f part of the scale.

Coil L_1 consists of three pies, each containing 500 turns of No. 40 wire on a ½-inch form. Feedback coil L_2 contains 200 turns of No. 36 wire wound between the pies of L_1.

A switch with spring return is incorporated to switch the test terminals to an internal standard 500-$\mu\mu$f capacitor to which reference can be made whenever desired. The oscillator, due to the grid-leak bias arrangement, tends to maintain a constant amplitude of oscillation, but any variations due to such factors as tube aging are compensated for when required by a screw-driver adjustment of the output potentiometer.

The same principle can be used for other ranges. For reasonable linearity of the scale, the capacitor impedance should be several times that of the other impedances in series with it, *i.e.*, the 1,000-ohm resistance and rectifier and the section of the output potentiometer across which the voltage being used is developed.

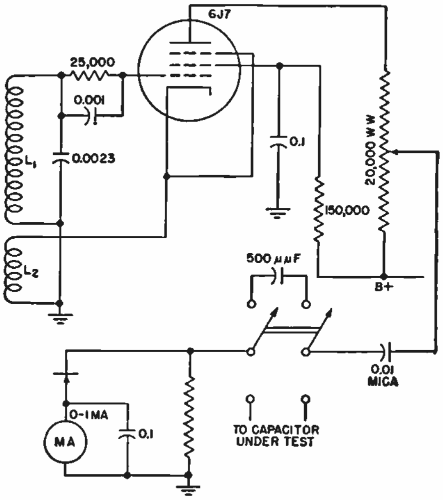

Other uses for the tester are thickness, moisture, and other evaluations that can be made by measurement of capacitance or dielectric constant.

Production Tester for Mica Capacitors, *Electronics*, August, 1944, p. 156.

Cathode-follower Amplifier Circuit Using Tube as Cathode Resistor

A POSITIVE square wave applied to the input of a conventional cathode follower has its leading edge well reproduced, but its trailing edge is badly distorted. A two-tube circuit shown overcomes this fault, has an output impedance of 30 ohms at frequencies up to 30 mc, and has a higher output voltage than a single-tube circuit.

In effect the two-tube circuit is a two-stage resistance-coupled amplifier with 100-per cent feedback from the second tube to the first. The plate resistance of the second tube serves as the cathode resistor in the stage of the first tube. This cathode resistance must be large so as not to decrease the gain of the second stage unduly. The cathode degeneration in the first stage is therefore large.

The value of output conductance represents an improvement over the conventional cathode follower by the factor μ. However, in driving low load impedances from this circuit, the signal must be small enough not to overdrive the lower tube.

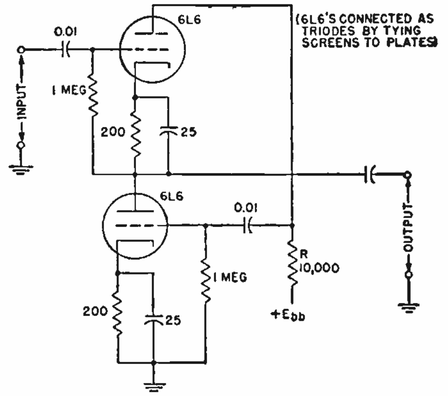

The output approaches unity as the output load approaches 1,000 ohms. The output is essentially uniform to about 10 mc but falls when above that frequency, falling faster with lower load resistances. A pronounced rise in output (an actual voltage gain) is obtained with a capacitive load of 0.0001 μf at approximately 10 mc. The rise occurs at lower frequencies as the capacitive load is increased. With 0.01 μf there is a slight rise at about 800 kc and practically no response at 1,000 kc. The fidelity of response to a pulse is definitely superior to that of a single-tube circuit, and the effect on sine waves is also good.

Calvin M. Hammack, Cathode Follower of Very Low Output Resistance, *Electronics*, November, 1946, p. 206.

Wave-analyzer Circuit Indicates Harmonic Distortion of Audio Amplifier

THIS harmonic wave analyzer provides a means for determining the second and third harmonic content of an amplifier or similar piece of apparatus operating in the a-f range. The method is based on the assumption that the harmonic content of the equipment under discussion is reasonably independent of frequency. This assumption is fulfilled quite well in audio amplifiers so long as the output load is a pure resistance.

An adjustable sinusoidal voltage of fixed frequency is applied to the equipment under test. A variable-gain amplifier incorporated as part of the wave analyzer is adjusted until the output meter, fed through a filter of fundamental frequency, reads 100 per cent. The reading is also obtained for the magnitudes of the second and third harmonics, respectively, by noting the meter reading when the appropriate filter is switched into the circuit.

The fundamental parts of this instrument are an isolating amplifier, band-pass filters, a voltage amplifier, a rectifier, and meter. The first amplifier is used to isolate the instrument from the circuit under test. The band-pass filters are tuned to pass only the desired fundamental, second, or third harmonic frequencies. Following the filters is a two-stage audio amplifier feeding a diode rectifier that in turn actuates a milliammeter having a range of 0 to 1 ma.

A type 6J7 connected as a triode, and transformer coupled to the filter, is used in the first stage. The matching transformer T_1 has a turns ratio of 3.6 to 1 and is a universal plate-to-line transformer of good quality. This reflects a load of approximately 7,500 ohms back to the plate.

A steady current of about 0.05 milliampere is bucked out by feeding a small voltage back from the power supply. The tap on the voltage divider is determined by trial as the current to be bucked out varies for different tubes.

Since the calibration of the voltmeter was very nearly linear, it was found convenient to provide three ranges having full-scale distortion readings of 100, 50, and 10 per cent. These scales give readily ascertainable readings of harmonics to as low as 0.2 per cent. The scale change was accomplished by means of a series of resistors and a three-point tap switch connected as the grid resistor of the 75 triode.

Calibration of this instrument can be done in either of two ways. The first method is to feed a 2,000-cycle signal of adjustable amplitude into the instrument and to determine the output meter reading in terms of the input voltage. This procedure is repeated with adjustable voltages of 4,000 and 6,000 cycles. The harmonic distortion is then calculated and calibration curves are plotted showing the percentage of harmonic distortion against the output current. With this method there will be little error introduced by aging of the tubes.

The second method of calibration uses two oscillators, the first of which must be free of harmonics. Such a sinusoidal oscillator may be obtained by inserting a 2,000-cycle band-pass filter in the output of the laboratory oscillator, or generator. The output of the second oscillator is fed into the instrument in series with that of the 2,000-cycle oscillator. Meters are placed across the outputs of both oscillators and the harmonic voltage, which is thus artificially generated, can be read directly. It is important that the mixing resistances be linear (independent of voltage or current) to prevent modulation of one oscillator by the other.

The voltage of the No. 1, or distortionless, oscillator is adusted for full-scale reading of the meter with the 2,000-cycle filter connected in the wave analyzer. The 4,000-cycle filter of the analyzer is then cut in. The voltage of the 4,000-cycle oscillator is gradually increased, and a curve of harmonic voltage against output current is plotted for second harmonic distortion. This procedure is repeated for the third harmonic and the percentage of distortion is determined as in the previous method. These two methods of calibration checked with a maximum difference of 2 per cent, which occurred near full-scale readings.

By properly apportioning the scale-changing resistances R_1, R_2, and R_3, a

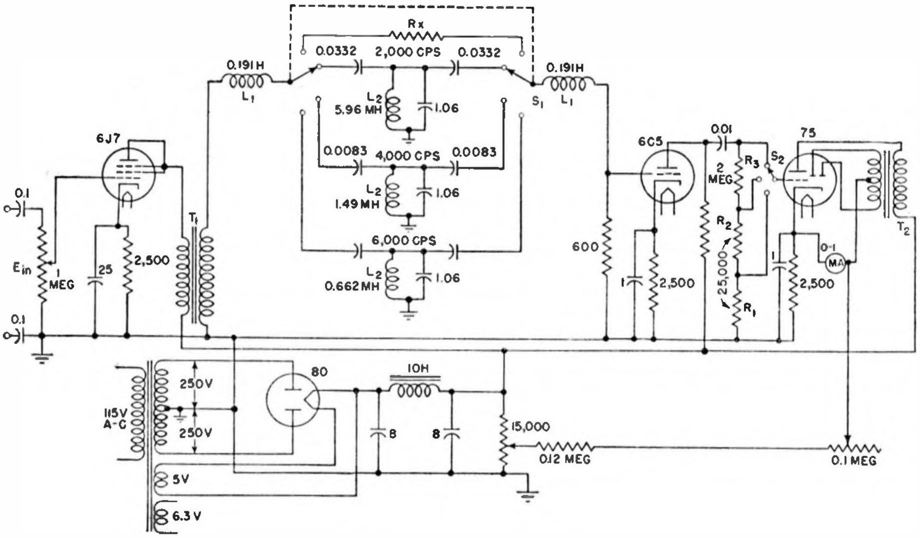

single calibration curve may be used for the instrument if all filters have the same midfrequency attenuation. The midfrequency attenuation of the filters may be adjusted by connecting an appropriate resistor across the shunt arm inductance L_2. In this instrument, it was necessary to shunt the 4,000-cycle filter with a 220-ohm resistance to make the attenuation equal to that of the 6,000-cycle filter.

Operation of this analyzer is relatively simple and rapid. The device to be measured is supplied with a 2,000-cycle distortionless, or sinusoidal, voltage and the output from the device connected directly to the analyzer. With the 2,000-cycle filter in the circuit and the meter switched to the 100 per cent position, the gain control of the analyzer is adjusted to give full-scale reading of the meter. The 4,000- and 6,000-cycle filters are then switched in and the magnitudes of the second and third harmonic voltages, respectively, are read. The minimum voltage necessary to operate this instrument is approximately 4 volts.

R. F. Thomson, Simple Harmonic Wave Analyzer, *Electronics*, December, 1942, p. 61.

Power-line Synchronism Indicator Using Cathode-ray Tuning Tube

A TYPE 6E5 cathode-ray tuning indicator tube is used in this simple circuit for showing synchronism relations between a 132,000-volt power line and a bus to which it is to be connected. The small size of this tube enables its installation to be made in the best position for observation by the operator. Also, because of its small size it may be duplicated at other convenient points by connecting additional tubes in parallel.

In the diagram, line *L* is synchronized to the bus by means of switch *S*. To a phase conductor of the line a static collector wire is electrostatically coupled, and another static collector wire is similarly coupled to the corresponding phase conductor of the bus. The potential developed in each of the pickup wires is proportional to and of the same frequency as the potentials of the bus and line to which they are coupled. Before the switch can be closed, the frequency and phase relation in the bus and in the line or in the pickup wire must be identical. During synchronism there is no difference of potential in these two pickup wires, and therefore the adjustment is made such that the 6E5 target shows a green light pattern with only a thin black shadow. With the line of the bus out of step the thin line of shadow spreads out with a more or less rythmic opening and closing motion. The 100,000-ohm resistor is set so that the shadow covers approximately a 90-degree sector of the circle.

The indication given by this instrument does not in itself show whether the incoming line has a frequency which is higher or lower than the bus to which it is to be connected. If this information is required, it may be obtained by the addition of an amplifier tube to provide the power needed to operate the rotation-indicating device.

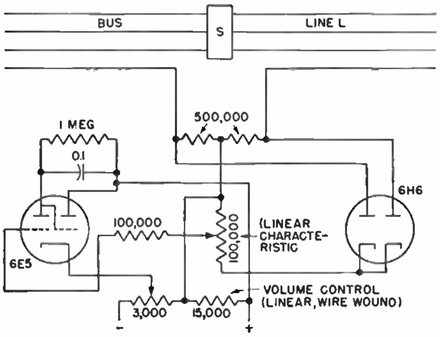

Frederic S. Beale, Cathode Ray Type Synchronism Indicator, *Instruments*, March, 1940, abstracted in *Electronics*, April, 1940, p. 105.

Precise and Sensitive Contact-indicating Circuit

A CATHODE-RAY tuning indicator tube serves here as a simple and inexpensive indicator of the precise moment at which two metallic bodies touch. A maximum variation of only four millionths of an inch on successive tests can be achieved on such micrometer applications as sorting polished steel ball bearings or calipering polished steel surfaces.

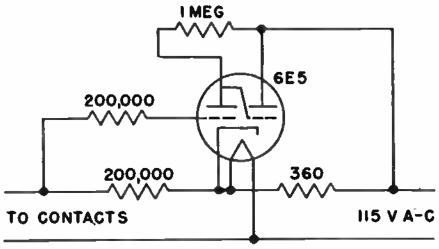

In the circuit, the grid of the 6E5 is biased sufficiently negative to cut off plate current, so that the target fluoresces all around. When the contacts touch each other or are joined by the object being calipered, the grid of the tube is made positive with respect to the anode and target, so that plate current flows and a shadow appears on the target.

Mills, *Rev. Sci. Instruments*, February, 1941, p. 105.

Vacuum-tube Microammeter as Portable Indicating X-ray Dosimeter

This a-c operated instantaneous-reading X-ray dosimeter circuit can be used for measuring in arbitrary units the currents produced by both hard and soft ionizing radiations. Once calibrated against a standard, readings are taken as the difference of microammeter readings with and without X rays.

The voltage-doubling power supply calls for use of an external ground wire for the circuit and correct polarity for insertion of the power plug in the outlet receptacle. The indicating lamp glows if polarity is wrong, assuming that an external lamp is used.

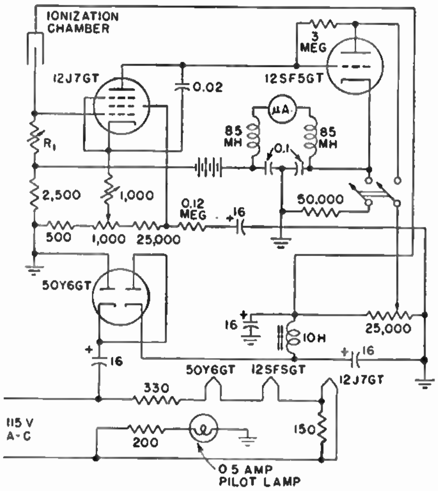

Usual precautions should be taken with the 12J7GT tube to keep the control grid current low so that large input resistances may be used. This tube is operated with about 6 volts on the filament and 20 volts on screen grid and plate, permitting use of a 1,000-megohm resistor for R_1 should such sensitivity be required. This resistance is preferably varied in steps, using a six-position selector switch and six fixed resistors ranging from 1 to 100 megohms or higher.

The filter network in the microammeter circuit permits placing the meter remotely from the dosimeter without trouble from stray electric fields.

Richard P. Krebs and H. Kersten, A Portable Indicating X-ray Dosimeter, *Rev. Sci. Instruments*, August, 1942, p. 332.

Audio-frequency Vacuum-tube Voltmeter for Measuring Complex Components of Voltage

The real and imaginary components of an unknown a-f voltage in the range from 20 to 20,000 cycles per second are directly indicated in sign and magnitude relative to a reference voltage by this a-f vacuum-tube voltmeter. Such data are useful in measurements on filters, attenuators, and amplifiers where knowledge of phase shift may be important. Operation is based on the fact that the magnitude of the vector sum of a large voltage and a small voltage is very nearly equal to the sum of the large voltage and the in-phase component of the small voltage.

The amplified reference is rectified by one section of T_1 acting as a linear peak diode, the resulting d-c voltage appearing across R_1 with the polarity indicated. The vector sum of the unknown and amplified reference is applied to the other section of T_2, also acting as a linear peak diode, with the resulting d-c voltage appearing across R_2. The difference of these two d-c voltages then appears across C_3. Diodes T_1 and T_2 may conveniently be a dual diode, both diodes included in the same envelope. This circuit has the advantage over other possible solutions in that both signal sources and the vtvm have a common low potential or ground side.

Tube T_1 is a double triode, each section being used as a cathode follower. The first section provides a means of changing the voltage range by the voltage divider in the cathode circuit. Range is selected by S_1. The second section provides a divided output voltage at constant impedance for introduction into the rectifier system.

Tube T_2 is the double rectifier that works into the d-c vacuum-tube voltmeter T_3. The latter has a range of plus or minus 1 volt, center zero. Switch S_2 provides a means of opening one rectifier circuit in order to set the magnitude of the amplified reference voltage at 50 volts, allowing it to be read by the same vtvm because S_2 also changes vtvm range from 1 volt to 100 volts. The magnitude of the reference is controlled by R_1.

The reference is applied to the first section of T_5, another double triode. The first section provides low output impedance for working into the phase-shift network controlled by S_6 and R_2. This network, when properly set, provides a leading phase shift of approximately 45 degrees.

The second section of T_5 works into two phase-shift networks; the one controlled by R_3 and S_5 provides a lagging phase shift of approximately 45 degrees, and its output provides the reference for measuring the real component of the unknown voltage. The other network out of T_5 controlled by S_4 and R_4 provides an additional shift of approximately 45 degrees leading for the measurement of the imaginary component of the unknown voltage. The proper reference for the component to be measured is selected by S_3 and applied to T_4, the voltage amplifier, which then works into the rectifier system.

In all three of the phase-shift networks, the proper capacitance depends upon the frequency only. Therefore S_4, S_5, and S_6 are ganged together and labeled as a frequency control, to be set for the frequency range desired. Potentiometers R_2 and R_3 are ganged together and used as the phase control for the real component. The setting which gives in-phase reference results in the lead and lag 45-degree shifts mentioned above. After this control is set, control R_4 for measuring the imaginary component is set for an additional 45 degrees.

Potentiometer R_5 is simply the zero set for the d-c vacuum-tube voltmeter. Voltage-regulator tubes ensure stable operation.

The following is a summary of all controls:

Range. Ranges of 1, 5, 10, and 50 volts full scale plus or minus are provided by S_1.

Zero Set. With Use-cal switch on Use, reference voltage applied, and unknown terminals shorted, this control is set for zero voltmeter indication. With the switch in the Use position, R_7 having a resistance of 9,500 ohms is used as the voltmeter multiplier. This multiplier gives the input to T_3 a sensitivity of 2 volts. However, the microammeter scale has been altered to give a center zero, and the needle is adjusted to this point by R_5, the Zero Set control. The Zero Set applies about 1 volt to the grid of the second section of T_3 by this adjustment. Thus the actual range of the input to T_3 is ±1 volt.

Reference Amplitude. With Use-cal switch on Cal, this control is adjusted for a voltmeter reading of 50 volts. Resistor R_6, which is 0.5 meg, gives the meter a full-scale range of 100 volts, and therefore the adjustment is made for

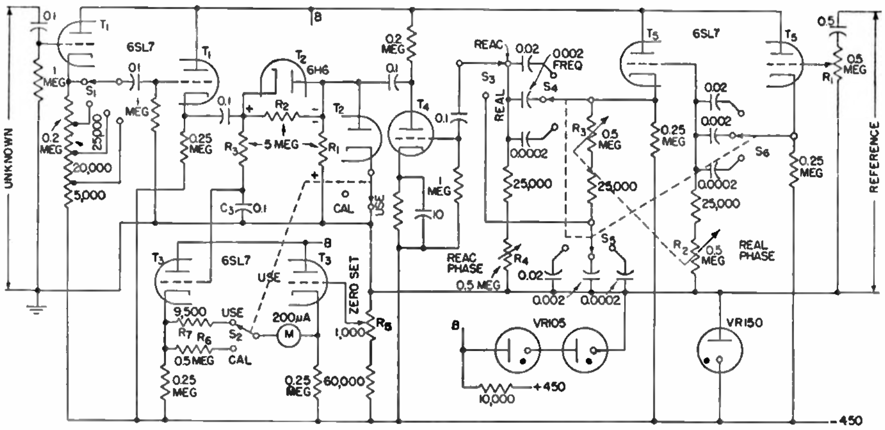

center scale. Because R_7 has been previously set to give about 1 volt deflection, this voltage produces negligible deflection with the new multiplier in the circuit. The microammeter is therefore at its extreme left, or zero-current, position with no input voltage. The 50-volt point is therefore the center of the scale, which is marked zero on the microammeter face.

FREQUENCY. This control must be set to the appropriate range. The ranges provided are 20 to 200, 200 to 2,000, and 2,000 to 20,000 cps.

REAL PHASE. With S_3 on Real and an external lead used to connect the reference voltage to both the reference and the unknown terminals, this control is set for a maximum value as indicated by the vtvm.

REACTIVE PHASE. With S_3 on Reac and an external connection as above, this control is set for zero value as indicated by the vtvm. This adjustment ensures a reading of zero for the imaginary component of a pure real unknown.

Although there may seem to be a large number of controls to be set, these do not have to be disturbed after they are once set provided that the frequency is not changed. Therefore in the analysis of a complicated circuit at a single frequency, the operation is very simple, only the Real-Reac switch and the Range switch being used.

George E. Pihl, Measuring Complex Components of Voltage, *Electronics*, February, 1947, p. 128.

Proteximeter Circuit for Measuring Total Amount of High-voltage Radiation

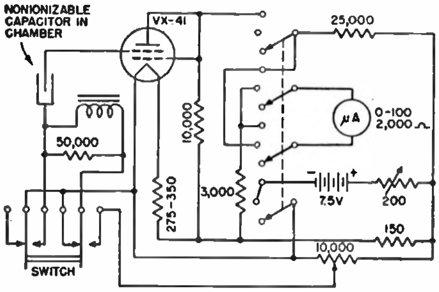

THE circuit shown will indicate the total amount of low-level radiation received in a given location over a period as long as 24 hours. This indication is of importance because the effect of high-voltage radiation such as X rays on the human body is cumulative. X-ray technicians and cyclotron operators, for example, are exposed to varying amounts of radiation in the course of a day. By the use of an instrument which indicates total quantity of radiation, it is possible to monitor the location in which the operators work, and make sure the total amount of radiation received in one day does not exceed the tolerance dose.

The shell on top of the instrument is a sealed ionization chamber containing a nonionizable capacitor and an electrometer tube operated as an inverted triode. The capacitor supplies the collecting voltage for the ionization chamber. In the absence of radiation no ions are produced, and the charge on the capacitor remains unchanged. When radiation strikes the chamber, however, the capacitor will lose its charge by an amount directly proportional to the total quantity of radiation received. Thus to measure the total amount of incident radiation it is only necessary to measure the change in voltage across the chamber and capacitor; this function is performed by the Victoreen VX41 electrometer tube.

For such an instrument to perform successfully, the leakage resistance across the capacitor, chamber, and electrometer tube must be almost infinite, and gas current in the electrometer almost zero.

The total capacitance of the chamber, capacitor, and electrometer grid is about 100 micromicrofarads. This capacitance is charged to -24 volts initially and when discharged (a condition that represents twice the maximum daily tolerance dose) this potential drops to -6 volts. In the absence of radiation the meter will move 2 per cent of full scale per day. This drift of course includes the effect of the background of cosmic radiation that is present at all times everywhere.

Apart from the 24 volts necessary to charge the chamber, the entire instrument can be operated from a 6-volt supply. This supply is made 7.5 volts to allow for aging of batteries, and is furnished by five flashlight cells. To step this voltage up to 24 volts, current is momentarily passed through a small choke loaded with a resistor. The voltage pulse developed when the current starts is ignored. When the current through the choke is suddenly interrupted, the voltage that will appear across the choke can be made any value desired, up to a few hundred volts, by properly proportioning the shunt resistor. To a first approximation (neglecting the effect of the resistance of the choke) the ratio between supply voltage and developed voltage equals the ratio of the series resistor to the shunt resistor. Because the capacitance of the grid-circuit chamber requires only a minute charging current, it will be charged nearly to the full voltage developed across the choke.

C. D. Gould, Subminiature Electrometer Tube, *Electronics*, March, 1947, p. 106.

Rectifier and Limit Circuits for Electronic Comparator Gage

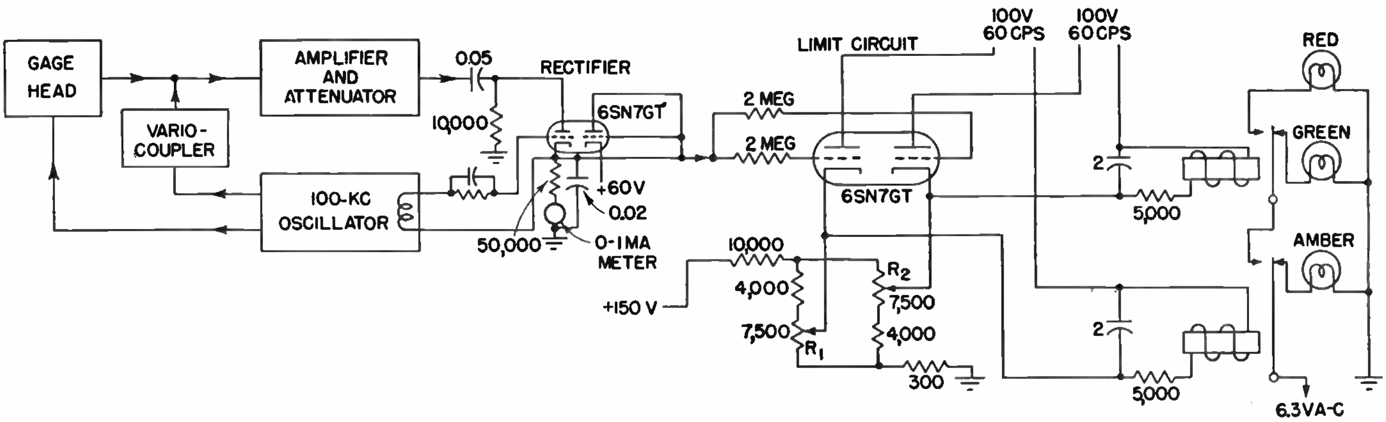

With the direct-indicating gage circuit given here, a standard-size piece of work is used to balance an indicating meter to zero center, and desired limits of deviation are set up. Movement of the diamond contact point of the gage during production inspection then varies the inductive relationship between two coils to light lamps indicating standard, oversize, and undersize pieces.

The circuit operates on the change in inductance of a coupled circuit at 100 kc. The gage head contains two coils, one fixed and connected to a 100-kc oscillator, and the other mounted on a spindle that is actuated by the work piece. The second coil is coaxial to the fixed coil, and as it moves a varying voltage is applied to a phase-correcting network and to the attenuator. The output voltage from a variocoupler, also fed from the 100-kc oscillator, is combined with the gage-head output. This permits the gage to be set to zero anywhere in its operating range by balancing out the gage-head voltage. The voltage from the attenuator is amplified. The amplifier is conventional and has practically no phase shift. Its output goes to the rectifier and thence to the indicating meter. The voltage developed across the load resistor in this circuit is applied to the grids of a limit tube in which the bias is varied so that the limit lights may be preset to selected tolerances. This provides within limit, above limit, and below limit indications.

A minute motion of the diamond contact point of the spindle must produce enough voltage to give a usable output. The fixed coil is wound in two sections, one in an opposite direction to the other. This provides an electrical center for the coil mounted on the spindle that moves up and down inside its form. If the spindle should move downward, however, so that its coil passes the electrical center, an output current would flow that might confuse the operator. The confusion is eliminated by using a rectifier similar to a diode vacuum-tube voltmeter. A voltage from the 100-kc oscillator is injected on the grid of the first section of the 6SN7GT double triode in such a manner that it is out of phase with the voltage from the amplifier when the spindle coil is below electrical center. This prevents any current from flowing through the load. The second section of the tube is connected as a diode across the rectifier triode and biased to give protection to the meter. The four ranges of the meter are ±0.003, ±0.001, ±0.0003, and ±0.0001 inch.

The limit control circuit provides a means of measuring within predetermined tolerances. This is a great advantage in sorting or where rapid inspection is required.

The output voltage across the 50,000-ohm load resistor appears on the grids of a 6SN7GT. The cathodes of this tube are biased from a voltage divider and are adjusted so that the relays operate at the desired output voltage (for a predetermined value on the meter scale).

With a regulated power supply, stability of the amplifier and oscillator is such that a ±10 per cent variation in line voltage produces an error of only 2 per cent on the meter when the gage is operating on its most sensitive range. Variations in gage block dimensions can be quickly detected since changes of 3 to 5 microinches are readily observed on the meter. Sensitivity and speed of operation are high enough to permit inspection of surfaces also.

W. H. Hayman, Electronic Comparator Gage, *Electronics*, July, 1946, p. 134.

Radiation Detector for Electronic Heating Generator

Measurements of radiation from a 6-kilowatt dielectric heating generator operating at 9 mc showed that as much radiation was leaking out of various holes and cracks in the generator cabinet as came out of a shielded work enclosure.

The oscillating wavemeter circuit shown here was used for detecting points of maximum radiation around the cabinet. Coupled to a small shielded loop, it provides indications on a grid meter for strong signals and a heterodyne beat in headphones for weaker signals. With the loop it was easy to find that the oscillator cabinet door joints were the source of the strongest radiation. Coupling the loop close to the surface of the cabinet permitted mapping the direction of current flow around the various portions of the cabinet.

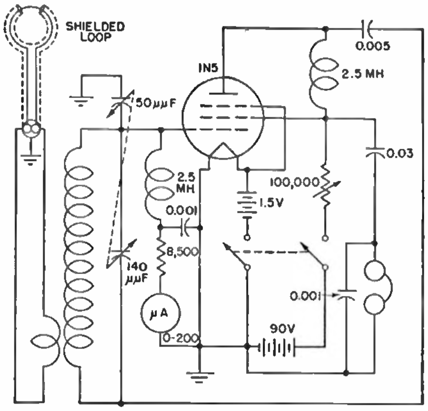

G. W. Klingaman and G. H. Williams, Shielding of Dielectric Heating Installations, *Electronics*, May, 1945, p. 106.

Pulse-stretching Circuit for Use with Vacuum-tube Voltmeter

Pulse stretching by means of the accompanying circuit can sometimes be utilized to make a peak-reading vacuum-tube voltmeter usable on very narrow pulses. It is necessary to proportion R_5 and C_3 so that complete recovery, 99 per cent, can occur between successive pulses. At the highest repetition frequency, C_3 should be small enough to permit e_s to reach at least 99 per cent of final value during the narrowest pulse to be measured. These precautions are necessary to minimize loss of peak amplitude and consequent loss of accuracy.

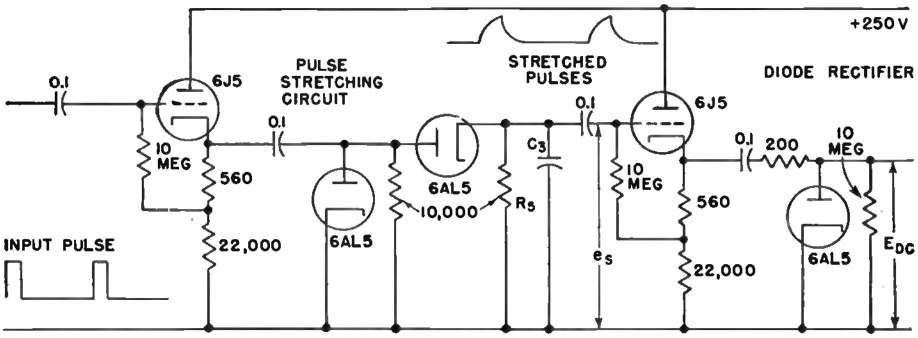

Allan Easton, Pulse Response of Diode Voltmeters, *Electronics*, January, 1946, p. 146.

Measuring Electrical Resistance of Oil Film

In this circuit, an accurately regulated low a-c voltage is applied, in series with a fixed resistor, to metal balls between which is the oil film whose resistance is to be measured. In parallel with the oil-film path is the primary of the coupling transformer for the amplifier, so that the resistance between the balls shunts the primary and affects the voltage drop across the transformer. This voltage is amplified, rectified, and read on a microammeter calibrated directly in resistance from zero to 260 ohms. In addition to the conventional line-voltage regulator serving both power transformers in the circuit, an electronic voltage-regulator circuit using type 2A3 and 6C6 tubes is used for the power pack serving the two voltage-amplifier stages.

C. J. Penther and D. J. Pompeo, Electron Tubes in Petroleum Research, *Electronics*, April, 1941, p. 20.

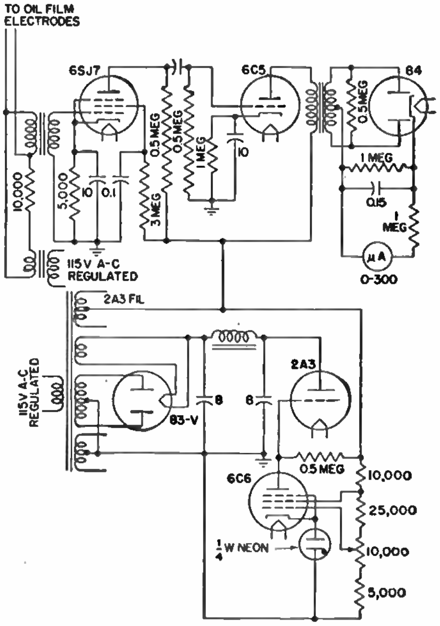

Slow-return Audio-peak Voltmeter Circuit for Sound Recording

This circuit has been found useful for sound-recording work. The meter will read peak voltages with very quick dynamic action, but has a slow return to zero. The time constant is adjusted by the use of resistor R_5 in the diode ground lead. When this bleeder resistor is removed, the time of return is approximately 5 seconds. However, when a resistor of about 1 megohm is inserted as a bleeder, the meter follows the envelope of the sound voltages.

The signal is applied through a coupling circuit to the grid of the triode section of the tube. From the plate circuit of the triode the signal is passed on to the diode plate through C_1. The meter is inverted, and R_3 is adjusted so that the meter reads 1 ma with no input. A 1-volt signal will cause full-scale deflection. The voltage divider R_4 allows use on higher voltage ranges than 1 volt.

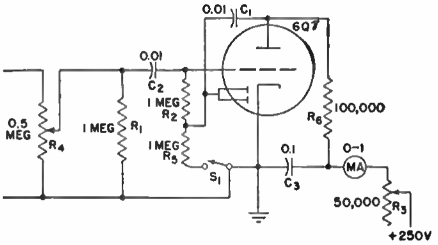

Henry Loughnane, A Peak Voltmeter Useful for Sound Recording, *Electronics*, August, 1938, p. 42.

METAL-LOCATING CIRCUITS

Beat-frequency Locator for Buried Manholes and Large Buried Metal Objects

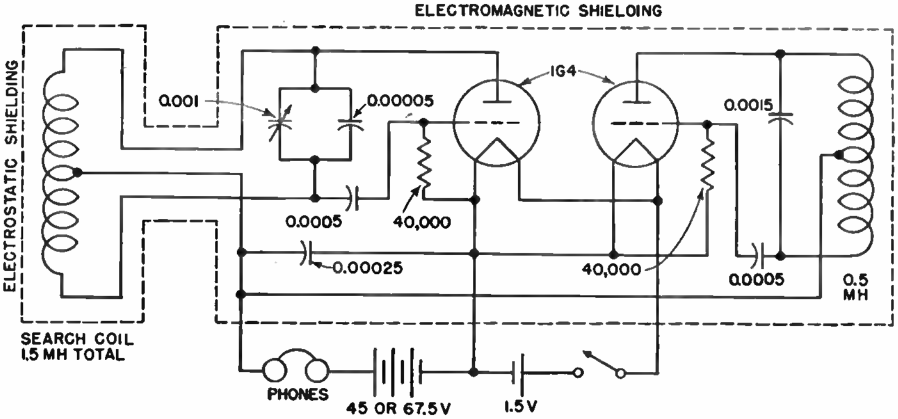

In the public-utility field this beat-frequency locator is very useful for finding buried manholes and other types of metal boxes used to protect gas and water valves and cable junction boxes. It is most effective in locating buried metal having a large surface facing toward the exploring coil, and hence is not ordinarily used for tracing small pipes. Large pipe lines can be traced as long as the depth does not exceed the penetration of the locator, determined by the frequency, the power fed into the pickup coil, and the diameter of the pickup coil.

Many different frequencies have been tried with this type of locator, and there seems to be no critical value. Frequencies as high as several megacycles have been used, but frequencies between 150 and 400 kc appear to be completely satisfactory. At low frequencies, more power can be used without exceeding the signal strength of 15 microvolts per meter at a distance of $\lambda/2\pi$ (or $157{,}000/f_{kc}$ ft) as set by the Federal Communications Commission in sections 2.101 through 2.104 of the FCC ruling applying to low-powered radio devices operating without licenses.

The circuit uses no detector or mixer, as both of the triode Hartley oscillator tube plates are fed through the headphones. When the beat note reaches the audible range, the plate-current impulses are heard in the headphones. The frequency of the pickup oscillator is kept slightly higher than the fixed oscillator frequency, to prevent the oscillators from locking into step.

When a conductor comes into the field of the pickup coil, the eddy current set up in the conductor opposes the field in the coil, and the effective inductance of the coil is reduced as a result of the shorted-turn effect. The reduced effective inductance increases the frequency of the associated oscillator, and the audible beat note rises in pitch proportionally.

In actual operation the pickup oscillator frequency is set slightly high so that a low-pitched beat note is produced when the coil is about the correct distance above the street or barren soil level. Then, when a conducting body is approached, the beat note increases sharply in pitch, to a maximum directly over the conductor.

In the construction of such a locator it is important to shield the coil with metal foil or sheet metal, being careful not to form a short-circuited loop with the shield. Without a shield the capacitance of the pickup coil to the earth or vegetation creates a decrease in frequency so that the result is a tendency to cancel the frequency increase caused by proximity to a conducting mass. The fixed oscillator should be shielded, so that the two oscillators will not be magnetically coupled.

The interlocking difficulty may be eliminated by the use of a form of buffer stage. A meter can be added to give visual indication of buried metal, but headphones allow the operator to use his eyes in searching for traces of the lost object and to watch for traffic and obstacles. A meter would require at least one additional tube, with increased battery drain.

W. H. Blankmeyer, Metal Locators, *Electronics*, December, 1943, p. 112.

Exploring Coil and Two-tube Amplifier for Locating Current-carrying Cables and Pipes

This circuit is designed for locating, without digging, cables, pipe lines, conduits, and other metallic conductors that are buried in the ground or in concrete walls and floors and are carrying current. The device consists of a magnetic pickup coil on a U-shaped iron core, a battery-operated vacuum-tube amplifier, and an indicating meter. It has sufficient sensitivity to detect a 60-cycle current of 2 or 3 amperes at a distance of 1 foot. Cables carrying direct current can easily be detected if the current is generated by a d-c generator. This is made possible by the commutator ripple. In cases where the cables are shielded in iron conduits there is generally enough ground current to operate the detector, or where it is necessary current may be passed through the conduits. By the use of this instrument, iron conduits have been located as much as 13 feet underground with no difficulty and with good accuracy.

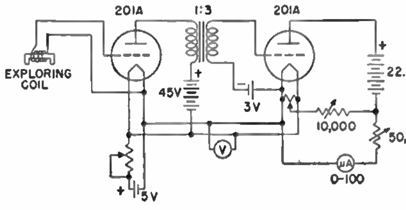

H. C. Marcroft, Locating Buried Cables and Pipes, *Instruments*, May, 1940, abstracted in *Electronics*, June, 1940, p. 94.

Portable Beat-frequency Type of Locator for Finding Buried Steel Rail Crossties

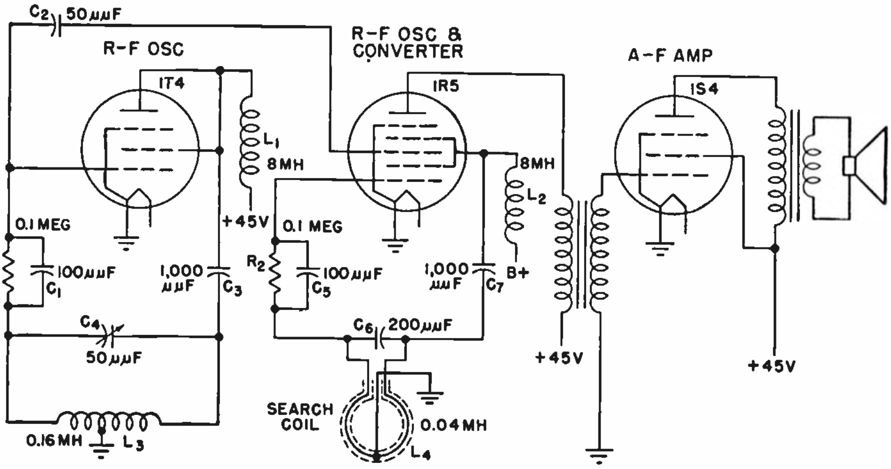

This electronic locator was devised to locate ½ by 2-inch steel straps about 1 foot under the pavement, serving as crossties between trolley rails, as the ties had to be cut with torches in order to pull up the rails on abandoned routes without destruction of the pavement. The circuit employed depends on changes of inductance of a search coil when metal was brought into its vicinity. This change results from eddy currents in the metal, which establish a flux opposing that from the coil.

To detect this very small change in inductance, circular search coil L_4 was made the inductor of the tank circuit in one of two r-f oscillators that were operated at slightly different frequencies. These frequencies were mixed in the 1R5 and detected. The difference frequency was amplified in the 1S4 and fed to a loudspeaker.

A fairly high radio frequency was used in the oscillators, since this produces a large change in cycles per second for a given percentage change in inductance. Also, the effect of eddy currents is more pronounced at high frequencies.

If the operating frequency selected is too high, the disturbing influence of stray capacitances and ground currents may become appreciable. A frequency of 2 mc was found to be a satisfactory compromise between these effects.

To minimize the influence of stray capacitances, a comparatively large capacitance and small inductance was used in the tank circuit containing the search coil, and a Faraday electrostatic screen was placed between the search coil and the ground. Increase of capacitance and decrease of inductance reduce the impedance of the tank circuit. This reduction results in a poor impedance match with the plate resistance of the tube.

The filaments of the tubes were supplied from a flashlight battery, and the plates from a 45-volt hearing-aid battery.

James G. Clarke and Charles F. Spitzer, Electronic Locator for Salvaging Trolley Rails, *Electronics*, January, 1944, p. 129.

Circuit for Detecting either Metallic or Nonmetallic Objects

The discontinuity detector circuit shown, used in mine-detector set AN/PRS1, will detect the presence of nonmetallic masses buried at shallow depths in the ground. Modifications could be used to detect the presence of metallic masses of finite dimensions in nonmetallic objects, while discriminating against objects of smaller size.

The presence of voids, or discontinuities, in plastic objects could be determined by a modification of this detector. When the device is adjusted off resonance, it is capable of detecting the presence of personnel or vehicles in motion at ranges up to 100 feet. Such an application might be valuable in plant protection or machine safety installations where space limitations or arrangement preclude the use of a separate source and receiver combination, or where ambient noise or light prevent the use of audio or photoelectric systems.

The ultrahigh-frequency oscillator mounted in the detector head is of the resonant line type, operating at a frequency of approximately 300 mc. A 50-μμf capacitor, used as a resonant line shunt, is made externally adjustable by means of the tuning knob at the bottom of the detector-head assembly. An antenna coupling loop is mounted in the detector head case, providing coupling from the oscillator to the antenna system. The coupling loop is shunted by a resistor chosen to maintain the antenna impedance at the value required for operation. The a-f oscillator is of the *RC* type using an untapered phase-shift network. A tapered phase-shift network would reduce oscillation difficulties with low-gain 1N5GT tubes, however.

The operating frequency of the oscillator is higher than the resonant frequency of the antenna. The coupling loop is shunted by a resistor and is retained in a fixed position with respect to the oscillator lines. The oscillator frequency is adjusted by means of the resonant line shunt capacitor.

Proper adjustment is obtained when approximately 80 microamperes of grid current flows in the oscillator circuit when the detector head is held approximately 3 inches above the ground. The presence of a nonmetallic mine then causes the grid current to drop to that value established by the contact potential of the tube (usually 10 or 15 microamperes). The presence of a metallic mine unloads the oscillator, causing a substantial rise in grid current (usually in excess of 150 microamperes).

The decrease in grid current causes a drop in the d-c potential across the grid resistor, which is coupled to the amplifier output tube control grid. The decrease in control-grid voltage on the a-f output tube in the amplifier causes an increase in the audio signal output. The inverse effect occurs when the oscillator grid current increases. The audible signal is initially adjusted to a satisfactory level, the presence of a nonmetallic mine causing the signal to increase in amplitude, and a metallic mine causing the signal to cut off.

With the detector head held well above the ground, the tuning knob at the bottom of the detector-head assembly is turned clockwise to the extent of its travel so

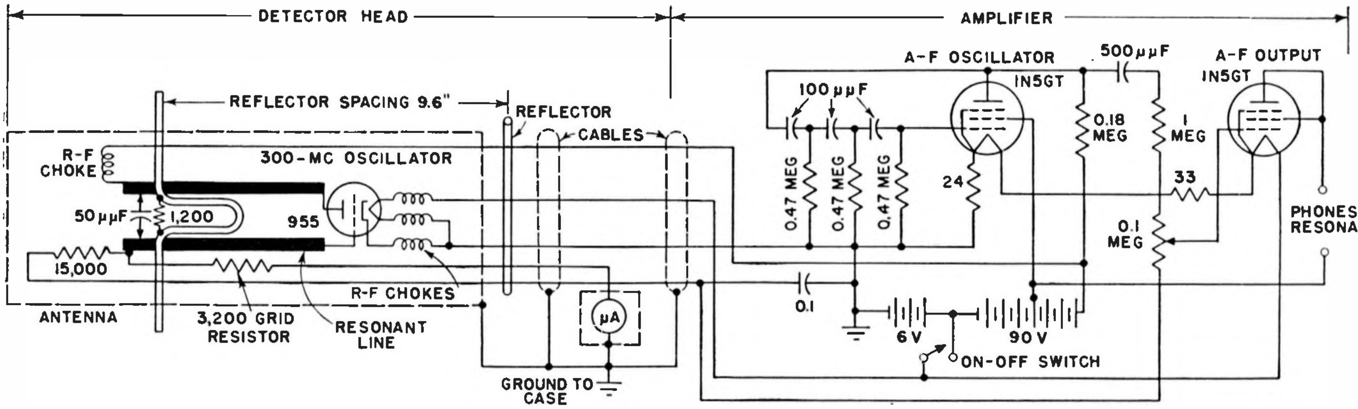

that the oscillator is operating at its highest frequency. The tuning knob is then turned counterclockwise until the detector meter reads approximately one-half full scale (approximately 80 microamperes). The detector head is then presented to the ground and the tuning knob is turned counterclockwise until no deflection of the meter occurs until the detector head is within 8 inches of the ground. The knob is adjusted until the detector meter reads half full scale at a height of approximately 3 inches from the ground. The detector oscillator is then operating under the condition necessary for the detection of both nonmetallic and metallic mines.

The potentiometer on the amplifier case is adjusted, with the detector head held in the operating position, until a nominal audio signal is heard. The detector operator then moves the detector head from side to side, advancing approximately 1 foot per sweep. For proper operation the height of the detector head above ground is maintained between 2 and 5 inches. Over normal soils and with mines buried at operational depths, metallic mines increase the meter reading and decrease the audio signal, and nonmetallic mines decrease the meter reading and increase the audio signal.

T. E. Stewart, Non-metallic Mine Detector, *Electronics*, November, 1945, p. 100.

Geophone Portable Amplifier and Vacuum-tube Voltmeter for Geophysical Prospecting

This geophone, for use in connection with a source of a-c power that is applied to the earth in the area being searched or is connected to pipes or cables whose course is being traced, consists essentially of a rugged portable audio amplifier and built-in vacuum-tube voltmeter. The search coil picks up the a-c magnetic fields for amplification by the geophone. For tests requiring physical contacts with the earth, the coil is omitted and pointed steel contact rods are connected to the input coil jack. The headphones are usually used to indicate the signal, although the vacuum-tube voltmeter is useful for indicating maximum-signal adjustments as contrasted with the null points, which are usually best detected by headphones.

The amplifier circuit is conventional except for the method of obtaining the bias for the 1A5. This bias is developed across the 900-ohm resistor in the negative B battery lead to both amplifier tubes.

A separate filament battery is necessary for the voltmeter tube, since the filament is made more positive than −B to obtain grid bias. This bias is adjusted by a potentiometer connected across the negative half of the B battery.

The voltage gain of this amplifier is 43 db. For most purposes this is enough, but another stage identical with the 1N5 voltage amplifier can be added if care is exercised in shielding the tubes and leads, and crystal headphones are used. The magnetic field from ordinary headphones would be fed into the pickup coil, with regeneration and oscillation the probable result.

The pickup coil design determines to a large extent the sensitivity and usefulness of the geophone. Usually, the desired result is maximum voltage from a very weak magnetic field, making it necessary to use a large number of turns (from 5,000 to 20,000 turns). The coil is wound in a ⅜-inch wide by 1½-inch deep groove in a plywood ring 9 inches in outside diameter. It holds 5,000 turns of No. 36 enameled wire.

It is necessary to shield the coil from the effects of stray capacitance and electrostatic charges. A practical form of shielding is copper, aluminum, or tin foil pressed around the ring and ending in a tape-insulated lap joint so as not to form a short-circuited turn. The foil is connected to the shield of the flexible coil lead.

For ordinary small locating jobs the conventional auto radio vibrator-inverter circuit furnishes ample power. For short periods of time, it may be used with dry cells; otherwise a 6-volt storage battery is most economical.

When the geophone is used for searching large plots of ground for ore bodies, an engine-driven generator or power from a commercial line is desirable to create a stronger field. Tube oscillators have also been used for generating a-f power at higher frequencies than can be produced by mechanical vibrators.

When a pipe line is being traced, it is usually possible to make a connection to the pipe at some point where the location is known. When this is the case, the signal will be applied between the pipe and a ground rod or other ground connection. If a connection is not available, then two ground rods somewhere near the pipe but spanning the unknown section will feed sufficient current into the pipe.

The signal will be detectable for some distance on each side of the connection, depending on the soil resistance and depth and the size and condition of the pipe. With a coated pipe, the kind used for natural-gas transmission across country, the signal is reasonably strong for a mile or more in each direction.

The geophone with pickup coil is used in this method also. The vibrator power supply is very satisfactory as a source of signal.

The null-signal adjustment of the coil gives the most satisfactory indication of the position of the pipe or cable being

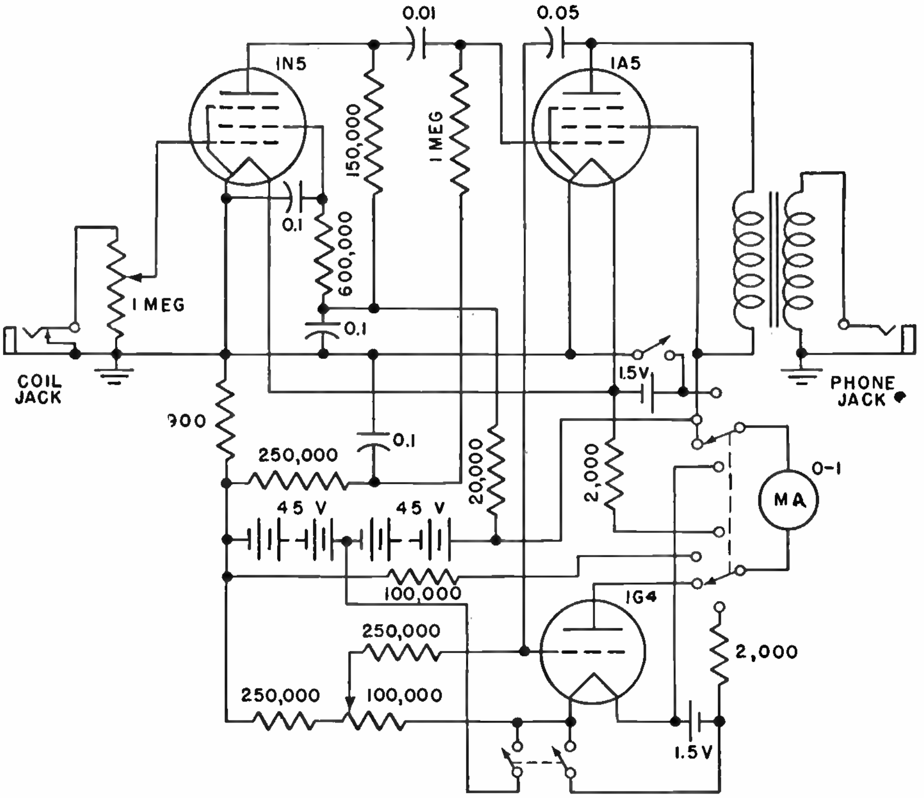

located. The null signal exists when the axis of the coil is pointing at the center of the pipe carrying the tone signal. With the use of the level on the coil, the exact pipe location can be found. Also, the approximate depth of the pipe can be determined by backing away from the pipe until the null signal occurs at an angle of 45 degrees. Then the depth of the pipe is equal to the distance from the point over the pipe to the 45-degree position of the coil. The height of the coil above ground will be subtracted to get the true depth from the surface.

Pipes and cables under water can be traced very easily. If necessary, the coil can be made waterproof and lowered by means of the connecting wire. The signal will be detectable from the surface unless the depth is too great or other factors interfere.

The actual detecting is done by adjusting the position of the pickup coil until the null-signal point is found. At this point the axis of the coil will project through the conductor carrying the tone signal. This is surprisingly accurate where there are no disturbing conductors.

Faults in communication and power cables can also be located by means of the geophone and the pickup coil. As in most locating, a certain amount of experience is necessary in order to interpret the signals resulting from the various faults in a cable.

In the case of short circuits the signal should normally be fed into the short-circuited conductors. To locate a ground, apply a signal between the earth and the grounded conductor. When the grounded spot is passed over by the pickup coil, the signal will decrease in amplitude.

Very frequently a power-cable fault offers a high resistance to a low-voltage signal. In such cases the fault must be burned until the insulation carbonizes to a lower resistance. Another system is to apply a sufficiently high voltage to arc through the fault but to limit the current by means of a suitable reactor. The current flowing under this condition can be used as the tone signal for locating by means of the pickup coil.

W. H. Blankmeyer, Metal Locators, *Electronics*, December, 1943, p. 112.

Vehicular-mounted Mine Detector with Automatic Drift-stabilizing Variometer Tube

DEVELOPED during the war to speed clearance of mines in roads and fields by covering a wider area at higher speed during each traverse of a suspected region, this metal detector circuit has output circuits that automatically deenergize the clutch and set the brakes of the vehicle before the front wheels reach the buried metal object. False signals are discriminated against by phase selection, and a variometer tube is incorporated to minimize circuit drift.

Four coils arranged side by side are carried ahead of the vehicle on a boom and are connected in series to serve as the transmitter. Another four coils in series are mounted flat on the first ones and are used as a receiver. The mutual inductance between transmitter and receiver coils is nullified by a group of air-core transformers giving an equivalent mutual inductance of opposite polarity.

Electrostatic shielding, to avoid capacitance effects when the coils approach the ground, is provided by a Faraday shield of thin copper wires embedded in the bottom part of the coil box.

In conventional detectors the mutual impedance between transmitter and receiver coils has to be manually nullified time and again, generally by means of two variometers corresponding, respectively, to the inductive and resistive components of the signal. This is primarily because changes in temperature of the coil assembly produce uneven thermal expansion, which results in a progressive change of the mutual impedance, with a corresponding drift of the output signal. In the vehicular detector, drift is particularly undesirable. Rebalancing takes time, and in this case speed is the goal. For that reason, an automatic electronic system has been devised that practically eliminates the drift.

The drift compensator consists essentially of a variometer tube. This tube is a variable-mu pentode, the grid of which is a-c modulated by the transmitter current, while the plate is coupled to the receiver circuit. A signal is therefore injected into the receiver circuit, and the magnitude of this signal depends on the d-c bias impressed on the control grid of the variometer tube. The signal at the output of the main receiver amplifier is rectified. The d-c voltage obtained, after one stage of amplification that is required in order to get enough power to operate a relay, is fed back through a resistance-capacitance delaying network to the grid of the variometer tube.

With this arrangement the system is self-stabilizing, and tends to keep the output signal constant or at least insensitive to slow drift. The action is somewhat similar to that of an automatic volume control, except for the fact that the use of a variometer tube makes it possible to

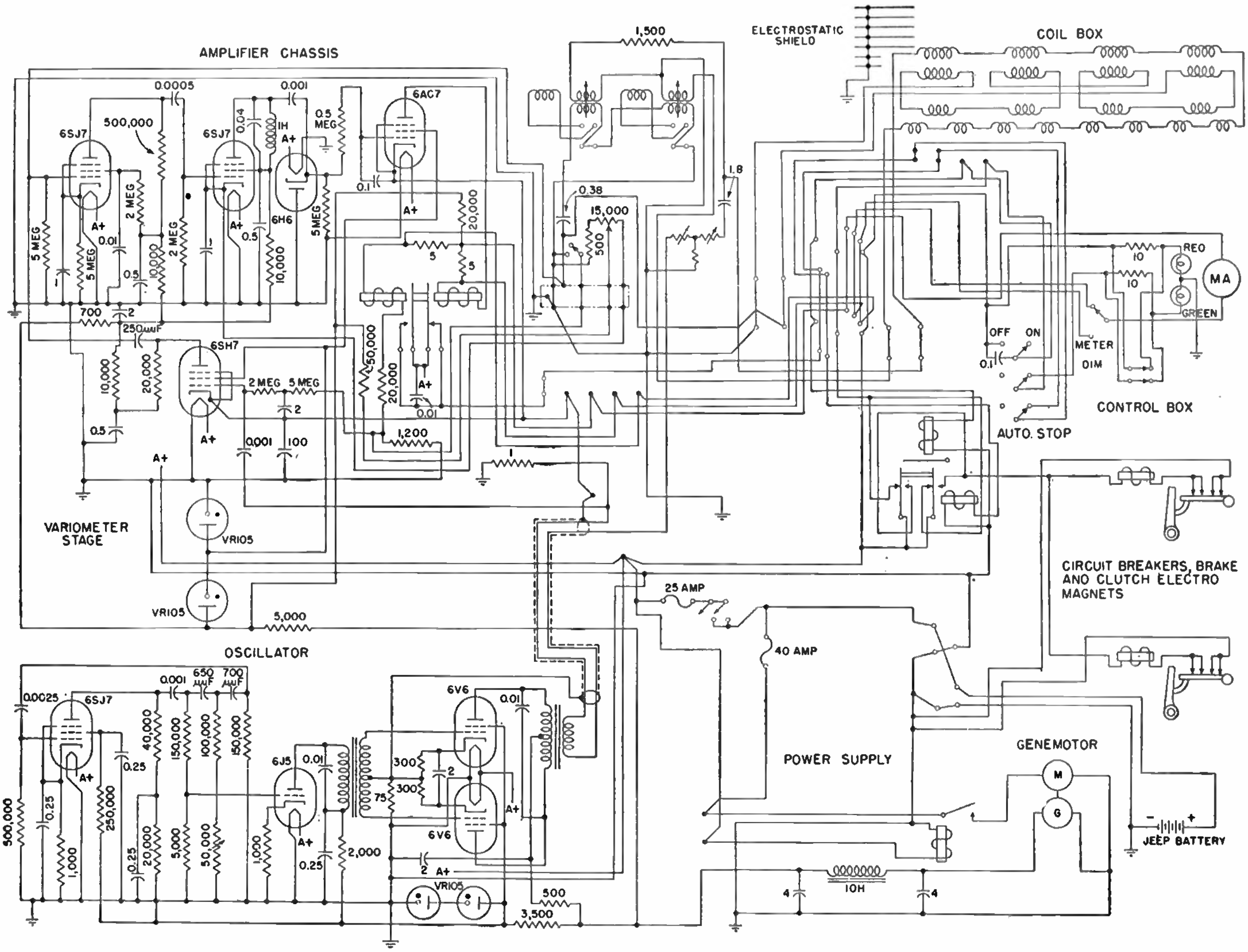

predetermine the phase of the signal injected by proper choice of the excitation phase and coupling to the receiver circuit. The automatic control takes into account not only drift due to thermal expansion of the coil assembly, but also any changes in the power output of the oscillator and of the over-all gain in the a-c amplifier and rectifier and the d-c amplifier network.

The drift control does not adversely affect the equipment's sensitivity to mines. When the detector coils pass over a mine, the signal is suddenly modified, and the change is too quick for the automatic control to balance it. The output signal level changes and operates a differential relay that is normally in its neutral position. This trips a latch-type relay, which operates the brake and clutch mechanism.

The above system, based on the use of an automatically controlled permanent signal, has two additional advantages. One of them is to give some phase selection. The second is to provide a warning in the event of breakdown of the circuit. If conventional operation at true balance were used, there would be no output signal under normal conditions, but something could deteriorate in the circuit with the result that the output would remain at zero even though a mine was encountered. In the vehicular device, every breakdown of the circuit automatically produces a substantial change of the output signal, either up or down, so that the brake and clutch mechanism is immediately tripped and the vehicle stopped.

The a-c excitation of the variometer tube, together with its coupling to the receiver circuit, can be so chosen as to give to the injected signal any desired phase with respect to the transmitter current. In the vehicular-mounted detector the phase of the injected signal has been chosen at 90 degrees with respect to inductive signals, such as those produced by a change in the mutual inductance of the coils. The result is that the detector has been made substantially more sensitive to resistive components, which are always an important part of a mine signal, than to purely inductive components which might result from changes of elevation above magnetic ground, or sudden twists of the coil assembly when passing over rough ground.

Before starting actual detecting operation, the circuit is balanced by means of manual controls, which consist essentially of two variometers giving, respectively, inductive and resistive components of compensating voltage. While this adjustment is being made, the automatic control is put out of action by means of a switch. A waterproof cover is then set over the control panel of the oscillator-amplifier box, and from then on the operator uses a very simple control box mounted on the steering column. This control box contains a meter which enables the operator to know at all times if the circuit is still in good balance and which also indicates the presence of mines. In addition, it contains a switch to disable the automatic-stopping equipment when automatic stopping is not desired.

H. G. Doll, M. Lebourg, and G. K. Miller, Vehicular-mounted Mine Detector, *Electronics*, January, 1946, p. 105.

Circuit for Detecting Conducting Liquids

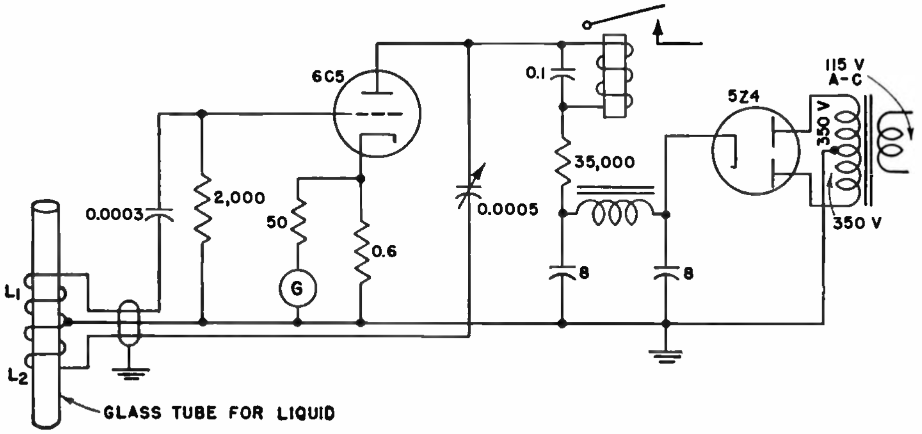

The oscillator in this arrangement operates while air or a nonconducting liquid such as oil is passing through the glass tube inside the coil, but stops oscillating because of eddy-current losses when an acid or other conducting liquid enters the tube. A millivoltmeter in the cathode lead of the 6C5 triode indicates whether or not oscillation is present, the reading being higher when there is no oscillation.

The liquid in the glass tube serves as the core for coils L_1 and L_2 in the tuned circuit of the oscillator. The circuit is adjusted to oscillate for a nonconducting, or air, core; it can be made sensitive enough so that 25 cu cm of hydrochloric acid in a 1.25-inch diameter glass tube inside the coil will cause a 0.5-ma increase in plate current. Where automatic control is desired and sensitivity requirements are less, the meter can be removed and the plate-circuit relay used by itself.

J. W. Broadhurst, Electronic Indicator for Liquid Separation, *J. Sci. Instruments*, June, 1944, abstracted in *Electronic Industries*, October, 1944, p. 112.

MOTOR CONTROL CIRCUITS

Electronic Combination Tachometer, Accelerometer, and Vibrometer for Gyro Rotors

THE circuit shown is designed primarily to assist in adjusting and testing gyroscope rotor assemblies. It combines in one unit the functions of a tachometer to indicate rotor speed, an accelerometer to indicate the rate of change of rotor speed, and a vibrometer to indicate visually and audibly the vibration present in a rotor assembly.

The rotor under test is mounted in a fixture and, by means of an air jet, is rotated at a fairly high speed to simulate operation in a gyro-horizon indicator, or directional gyro. Two pickups are mounted in the fixture in such a manner that rotation of the rotor produces varying voltages in each of the pickups.

Voltage from the crystal pickup, employed to operate the vibrometer, is fed to a class A amplifier whose output feeds a peak-discharge circuit using a gas tetrode. The plate circuit of the gas tetrode operates a peak-vibration indicator lamp. The output from the class A voltage amplifier also feeds a class A power amplifier that operates a loudspeaker. The indicator lamp and loudspeaker are used to provide visual and aural indications of the vibrations occurring when the gyro rotor is set in motion.

Voltage from the electrostatic pickup is employed to operate the tachometer and accelerometer circuits. The tachometer, or frequency-indicating channel, measures the speed of rotation of the gyro rotor. It consists of four electronic elements: (1) a class A voltage amplifier for increasing the magnitude of voltage obtained from the electrostatic pickup, (2) a class C limiter amplifier that provides additional gain and introduces some limiting action, (3) a saturated class C square-wave clipper whose output is essentially a rectangular wave, and (4) a class B metering-circuit amplifier that produces a series of sharp pulses or peaks of plate current.

The output of the tachometer is fed to a range switch; when this switch is on position *L* or *H*, the tachometer is connected to an indicating meter that averages the energy of the pulses from the metering circuit and reads low or high values of rotational speed. The number of pulses is proportional to the speed of the gyro rotor; hence the meter indication is also proportional to the gyro-rotor speed.

When the range switch is placed on position *C*, the output of the tachometer is fed into the accelerometer, which measures the rate of change of rotational speed. The accelerometer consists of two electronic elements: (1) a differentiating circuit whose output is proportional to the acceleration rather than to the speed of the gyro rotor, and (2) a vacuum-tube voltmeter, or amplifier, whose plate circuit feeds the indicating meter.

Considering the tachometer and accelerometer portions of the circuit, rotational speed input is obtained from an electrostatic pickup placed close to the rotor vanes or buckets.

The rotor constitutes one electrode of the electrostatic pickup while the second electrode is a small probe. As the rotor buckets (or vanes) pass by the probe, the change in capacitance between the probe and the vanes causes a displacement current to flow through a series resistor. The voltage drop developed across it is fed to the input of the class A voltage amplifier, consisting of V_1 and V_2.

The voltage-amplifier circuit is a conventional resistance-coupled type with a gain of approximately 100 per stage. This circuit operates as a class A amplifier for input signals of less than about 10 millivolts, but V_2 clips off the top of the signal and commences modification of the wave shape for input signals of more than 10 millivolts.

The output of the voltage amplifier is fed to a limiter stage. This stage contains a triode V_3, with fixed grid bias adjusted to approximately four times the cutoff value, or about 20 volts for a 6SF5.

The limiter stage functions to block out extraneous voltages, thermal agitation, and other noise when no input is applied from the rotating gyro. The high negative bias on the grid of V_3 stops low-level noise from actuating its grid, thereby stabilizing the operation of the circuit in the absence of signals from the gyro rotor. At the same time, V_3 contributes some squaring or clipping action since all negative portions of signal voltage are cut off.

The signal obtained from the output of the limiter stage is relatively large and is fed to a saturated class C clipper. The function of the clipper is to produce a wave which has the same fundamental frequency as that of the input signal but which has a rectangular wave shape whose magnitude is independent of that of the input signal.

The signal voltage applied to the grid of V_4 is of such magnitude that on negative portions of the cycle the grid is driven beyond cutoff and the part of the wave more negative than that necessary to reach cutoff is eliminated. On positive peaks the grid is driven positive so that plate saturation is reached. The part of the wave more positive than that required to produce saturation is likewise eliminated. The resultant wave obtained from the plate of V_4 is essentially rectangular.

The magnitude and shape of the square wave delivered by V_4 are practically independent of the magnitude or shape of the input signals, provided that the input is greater than 2 millivolts.

A fixed negative voltage somewhat greater than cutoff is applied to V_5. With no signal input, V_5 therefore draws no plate current. When a signal is applied, negative peaks merely make the grid more negative, while positive peaks cause V_5 to draw pulses of plate current.

The time constant of the input circuit to V_5, consisting of R_{41} and either C_{40} or C_{42}, is short, so that the coupling capacitor becomes fully charged at a time interval which is short compared with the period of pulses from the gyro rotor. Therefore the current that flows through resistor R_{41} reaches its maximum value and drops to zero in a period of time less than the shortest half cycle of the input signal. A pulse of voltage is produced by the surge of current through R_{41} and this is applied to the grid of V_5. Pulses in a positive direction cause V_5 to draw plate current, while pulses in a negative direction are eliminated by the fixed cutoff bias. Since the pulses of grid voltage are complete before the end of any half cycle, plate-current pulses will all be the same in magnitude but there will be a larger or smaller number of them per unit time, depending upon the speed of the gyro rotor.

With the range switch set on position

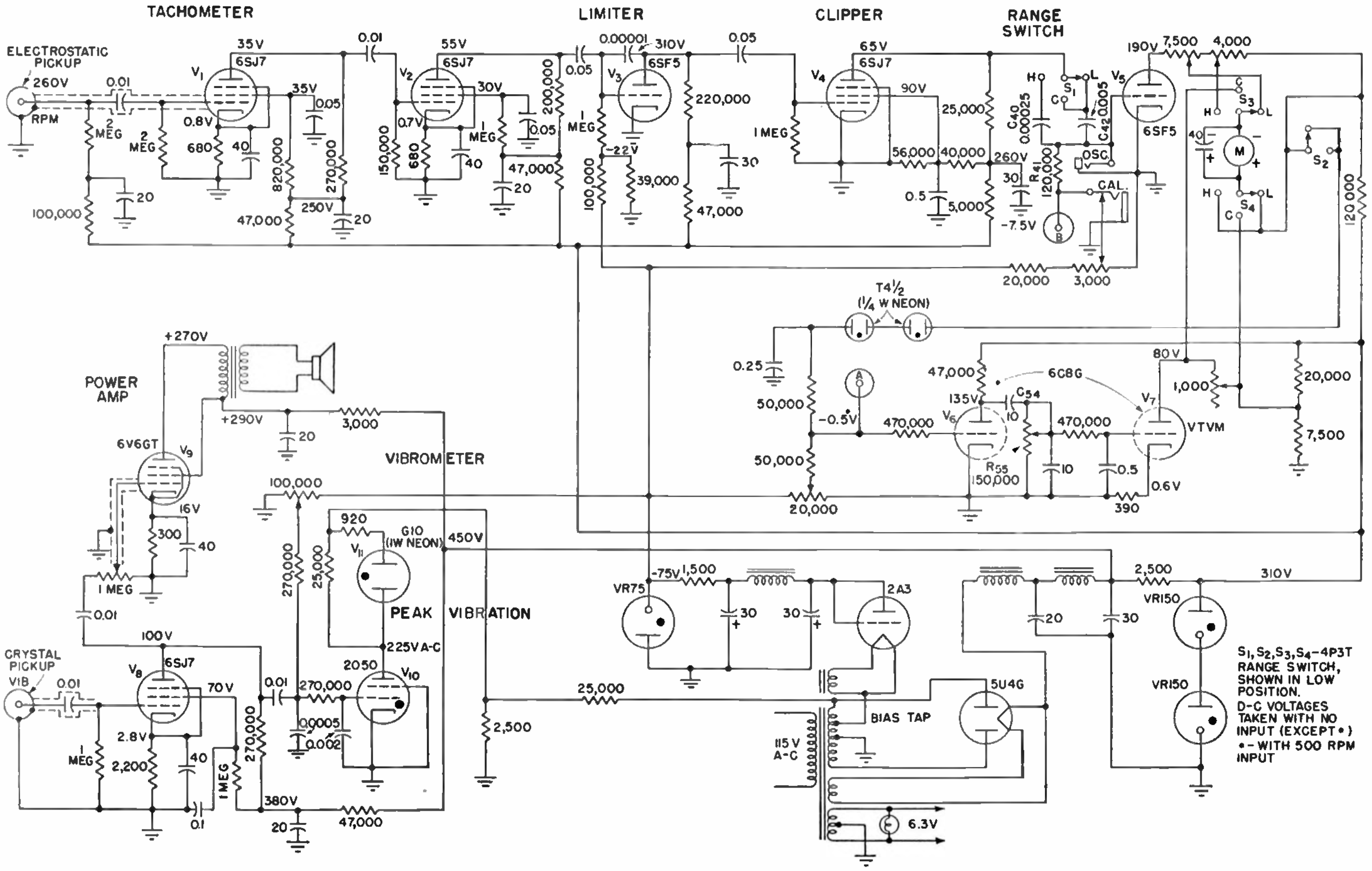

S1, S2, S3, S4–4P3T RANGE SWITCH, SHOWN IN LOW POSITION.
D-C VOLTAGES TAKEN WITH NO INPUT (EXCEPT •)
•–WITH 500 RPM INPUT

L or *H*, the output of V_5 in the metering-circuit amplifier is connected to the indicating meter. The movement of the meter cannot follow the rapid individual plate-current pulses of V_5; however, it produces a reading that is proportional to the integral or average value of the plate-current pulses. Since these pulses are of constant amplitude but vary in frequency, the meter reading will also be proportional to the frequency and may be calibrated in terms of revolutions per minute. Plate current flowing through V_5 as indicated by the meter is a measure of the input frequency or speed of rotation of the gyro rotor.

With the switch on position *L*, the meter indicates speeds of from 160 to 400 cycles per second, or 400 to 1,000 rpm for a rotor having 24 buckets. With the switch on the high position *H*, frequencies from 2,000 to 6,000 cycles, or speeds of 5,000 to 15,000 rpm, may be measured.

When the test unit is used to measure coast time (deceleration, or negative acceleration), the range switch is thrown to position *C*. This connects the output of the tachometer to the differentiating circuit and vacuum-tube voltmeter of the accelerometer, while at the same time the indicating meter is connected to the output circuit of the vacuum-tube voltmeter V_7.

Since the output of V_5 is proportional to the frequency of rotation of a gyro rotor, a differentiating circuit is required to produce a reading proportional to acceleration. The differentiating stage is intended to detect the slow change in plate voltage of V_5 encountered when a gyro rotor coasts.

For such low frequencies, any reasonable coupling capacitor would introduce a serious error in the response of the differentiating stage. Therefore direct coupling is required, and this is accomplished by means of two ¼-watt neon glow lamps connected in series.

Capacitor C_{54} and resistor R_{55} in the plate circuit of V_6 constitute the differentiating circuit, so that the grid voltage applied to V_7 is proportional to the deceleration of the rotor.

The coast-time amplifier V_7 is a vacuum-tube voltmeter operated at low plate voltage. With no signal applied to its grid, V_7 draws sufficient plate current to cause the indicating meter to read approximately full scale.

A decelerating rotor reduces the plate current drawn by V_7. The amount by which the plate current of V_7 is reduced is determined by the voltage developed across R_{55}, which depends upon the rate at which the gyro rotor is decelerating. Therefore the coast-time reading is a measure of the rate of deceleration.

The signal produced by the phonograph type of crystal pickup placed on the gyro frame is introduced on the grid of V_8, operating as a conventional class A voltage amplifier. The output of this amplifier divides into two branches. One branch drives a conventional power amplifier V_9, which operates a loudspeaker to give audible indications of vibration present in the gyro rotor.

The second branch is used to provide visual indication when vibration of the gyro rotor exceeds a specified amount. Output from voltage amplifier V_8 is fed into the input stage of the peak-discharge circuit employing a gas tetrode V_{10}. When the grid of the gas discharge tube exceeds a stipulated value, the tube breaks down and illuminates the indicator lamp V_{11}. In this way, excess vibration of the gyro rotor is converted into a visual warning.

An input signal of 2 millivolts or more is required for satisfactory operation. Most gyro units produce a voltage of at least 5 millivolts with the probe designed for this purpose.

With the range switch on position *C* for measuring coast time, negative acceleration from approximately 1.6 to 3.2 cycles per second is read on the indicating meter. The test unit is accurate to within 3 per cent when measuring rotational speed, whereas a precision to within about 5 per cent is obtained when measuring coast time.

An Electronic Tachometer, Accelerometer, and Vibrometer, *Electronics*, June, 1944, p. 100.

Electronic Exciter and Voltage Regulator for Three-phase Alternator

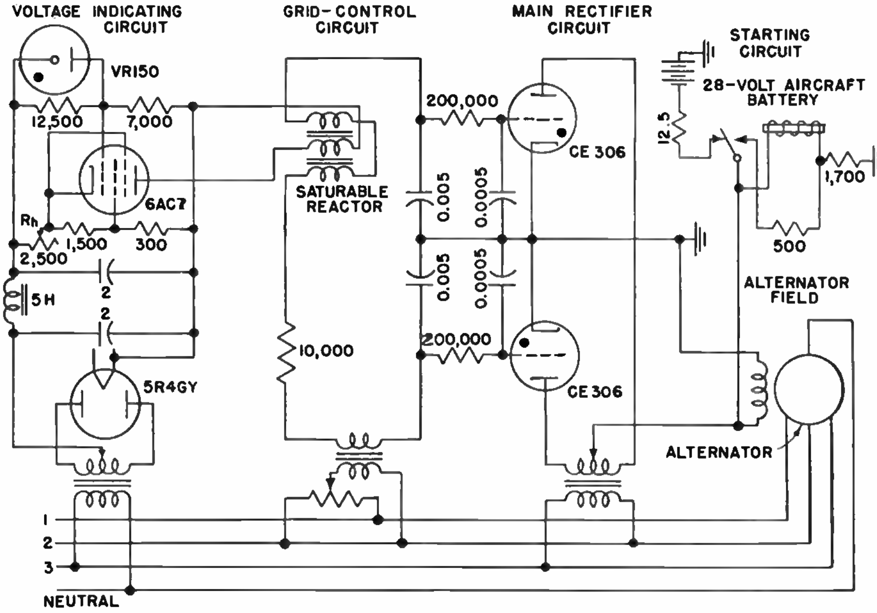

This electronic exciter for a three-phase 400-cycle constant-frequency a-c generator is controlled by an electronic voltage regulator. Field excitation is obtained from the output of the alternator through controlled rectifiers, reducing the weight of the alternator approximately 25 per cent, and eliminating problems of commutation at high altitudes, such as those encountered in aircraft installations. Voltage collapse is not experienced on faults that have sufficient impedance to maintain approximately 35 per cent of rated voltage at the alternator terminals.

The voltage-indicating circuit measures the deviation of the alternator line voltage from a set standard consisting of a d-c bridge circuit that is supplied through a 5R4GY vacuum-tube rectifier from the alternator terminals. A glow-discharge type VR150 voltage-regulator tube is used as a primary standard, and the bridge is balanced when the a-c voltage equals a value determined by the adjustment of rheostat R_h. Any deviation of a-c voltage produces a change in grid voltage of the 6AC7 amplifier tube with respect to its cathode and a corresponding change in the plate current, which excites a saturable reactor.

In the grid-control circuit, variations in reactance caused by changes of the d-c excitation of the saturable reactor produce corresponding phase shifts of the grid voltage of the CE306 thyratron main rectifier tubes.

The main rectifiers are connected for full-wave rectification. The output of the tubes, which flows through the alternator field, is determined by the relative phase angles of their grid and anode potentials. A change in voltage at the alternator terminals will unbalance the bridge, producing a change in the d-c excitation of the saturable reactor and a consequent shift of phase angle of the thyratron grid voltage, which raises or lowers the output of the thyratrons and the alternator excitation until the bridge is again balanced.

A 24-volt battery provides the excitation necessary to initiate voltage build-up in the starting circuit. When the unit is started, battery voltage is applied to the alternator field through a series resistance that is adjusted to produce approximately 60 per cent normal voltage at no load. At this voltage the heater current in the thyratron tubes is sufficient to start ionization. The low a-c voltage causes the bridge to call for full output from the thyratrons and, when ionization commences, the rectified voltage from the thyratrons adds to the battery voltage, increasing the excitation and a-c voltage cumulatively until normal voltage is reached. A relay opens the battery circuit when the field voltage reaches a self-sustaining value.

Paul T. Hadley, Arthur W. Forsberg, and O. Krauer, Exciter-regulator for Aircraft Alternators, *Electronics*, July, 1946, p. 120.

Thyratron Circuit for Reversible Operation of Two-phase Capacitor Type of Motor

With this circuit, one pair of control contacts permits reversing a two-phase capacitor type of a-c motor. When the contacts are open, the motor will rotate in one direction, and when they are closed the motor will rotate in the opposite direction.

Tubes V_1 and V_2 are both biased from the 6.3-volt filament circuit and the grid of V_2 is raised to firing potential by coupling capacitor C_3, which is supplied with line potential whenever V_1 is dormant. When contacts S_1 are open, V_1 is dormant and V_2 fires; when the control contacts are closed, V_1 fires and reduces the potential supplying coupling capacitor C_3 to a value that is nearly zero. This removes the firing voltages from the grid of V_2 and it becomes dormant.

The motor is supplied by transformers T_1 and T_2, alternately. When V_2 fires, transformer T_2 feeds an alternating current to motor winding A. Winding B is supplied through phase-shift capacitor C, and a rotating field results that drives the motor. Some efficiency is lost due to the shunting effect of transformer T_1 on motor winding B, but the motor operation is satisfactory for most purposes. When V_1 fires, the operation is reversed and transformer T_1 supplies power.

Since the input to transformers T_1 and T_2 is half wave, the addition of some filter capacitance (not shown in the diagram) to the circuit will improve the wave form of the current reaching the motor.

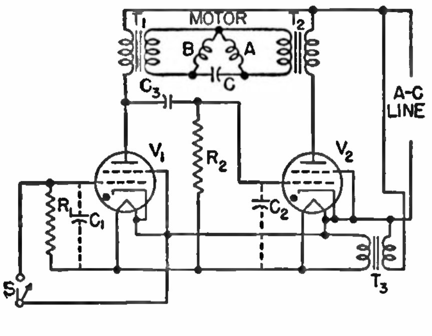

W. D. Macgeorge, Electronic Contactors for Control Applications, *Electronics*, April, 1946, p. 186.

Electronic Control for Adjusting Carbon Arcs

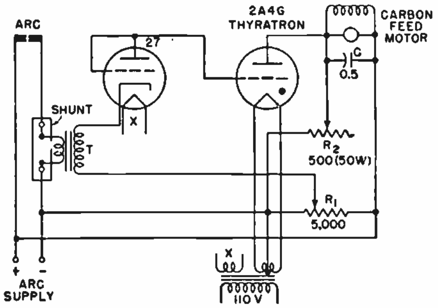

Carbon arcs used in motion-picture theater projection service are more critical with respect to current density than to voltage across their electrodes. The length of the gap has a major bearing upon illumination intensity and steadiness, formation of craters at the positive electrode, and the rate at which carbons are consumed. Direct current for the arc is often supplied by half-wave Tungar bulb rectifiers without filters, and carbon feed is something of a problem because the ordinary arc control does not function very well where current is pulsating.

The circuit shown is a simple, sensitive, and inexpensive electronic carbon-arc control that adjusts arc length as a function of arc current.

A heavy shunt having a value sufficient to produce about 10 millivolts drop across the primary winding of transformer *T* is connected in series with the power supply feeding the arc. (No-load output of rectifier units used with most commonly encountered carbon combinations is 70 volts, falling to approximately 54 volts under load. Shunt unit values for supplies having other characteristics are readily calculated.) The secondary winding of *T* delivers about 25 volts to the type 27 tube, used as a half-wave diode rectifier. The d-c voltage developed by the diode is applied as negative bias to the grid of the 2A4G thyratron. Thyratron fixed bias may be adjusted by varying R_1. Rheostat R_2 shunts the 2A4G so that this tube need not pass the entire arc-adjusting motor current. Capacitor *C* shunts the motor to keep the thyratron anode in phase with its grid, so that the tube may continue to exert control after the motor starts. (Relay coils originally furnished with the motor are removed to avoid impairment of circuit operation due to their self-induction.)

When the control unit is placed in operation, the arm of R_1 is rotated to the most negative point of this potentiometer, *i.e.*, the cathode center tap of the thyratron. With the arc burning, R_2 is adjusted until the arc-feed motor is just barely turning over. R_1 is then varied until the arc assumes its most efficient length and is held at this position until the carbon crater has formed. After the crater has formed, R_1 is readjusted for optimum arc length and remains set, needing no further adjustment until carbons have burned down to short stubs and require replacement. When these adjustments have been made, any increase in arc current (carbons too close together) develops a higher negative bias on the grid of the thyratron, cutting this tube off and slowing down the motor that is geared to drive carbons closer together. Any decrease in arc current (carbons too far apart) causes the carbon-feed motor to speed up.

Wilbur Flaherty, Electronic Control for Adjusting Carbon Arc, *Electronics*, March, 1942, p. 65.

Bridge-controlled Thyratron Drive for Reversible Motor of Water-level Indicator

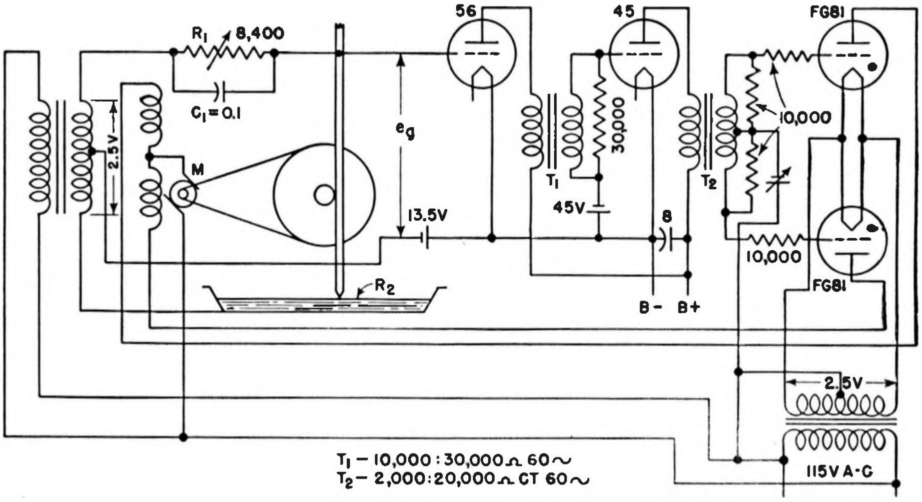

A bridge-controlled amplifier and thyratron rectifier combination serves here as an automatic liquid-level indicator and recorder in which interference with the surface of the liquid is minimized.

The variable-resistance arm of the bridge consists of the resistance between the liquid and a metal pointer that dips into it. This is the controlling resistance of the circuit, and is normally balanced by resistance R_1. Bridge-unbalance output differs in phase by 180 degrees depending upon whether R_1 is greater or less than R_2. Upon this reversal of phase depends the correct operation of the rectifier circuit. Capacitance C_1 is added across R_1 for the purpose of making adjustments.

The amplifier and rectifier are of the usual type. The thyratron rectifier tubes will fire depending upon the phase and magnitude of their grid voltages. Their plate voltages are in phase and are displaced 180 degrees from one another. Thus the output of the amplifier can fire only one thyratron at a time. A reversal of 180 degrees in this amplifier voltage will fire the other tube. The thyratron bias voltage is so adjusted that with no amplifier output (with the bridge balanced), neither tube will fire.

A $\frac{1}{100}$-hp double-field universal motor is driven by the two thyratrons; it is driven in either direction, depending upon the phase of the amplifier output. With the gear train employed, one revolution of the motor produces $\frac{1}{8}$ inch travel of the metal water-contacting pointer, or rack. The grid bias on the thyratron is adjustable, making it possible to decrease the dead space, or distance of free travel of the rack, to a very small value. The resistance R_1, though normally set at about 8,400 ohms, can be adjusted to cause the indicator on the gear assembly to read correctly in the event of any changes in water conductivity or contact resistance. This provides a convenient means of calibration. With a German silver point, readings deviated from the true level by only about 0.025 ±0.005 inch over an operating period of 70 hours.

L. A. Ware, Water Level Indicator, *Electronics*, March, 1940, p. 23.

Frequency-measuring Circuit Producing Two-phase Output for Synchronous Motor

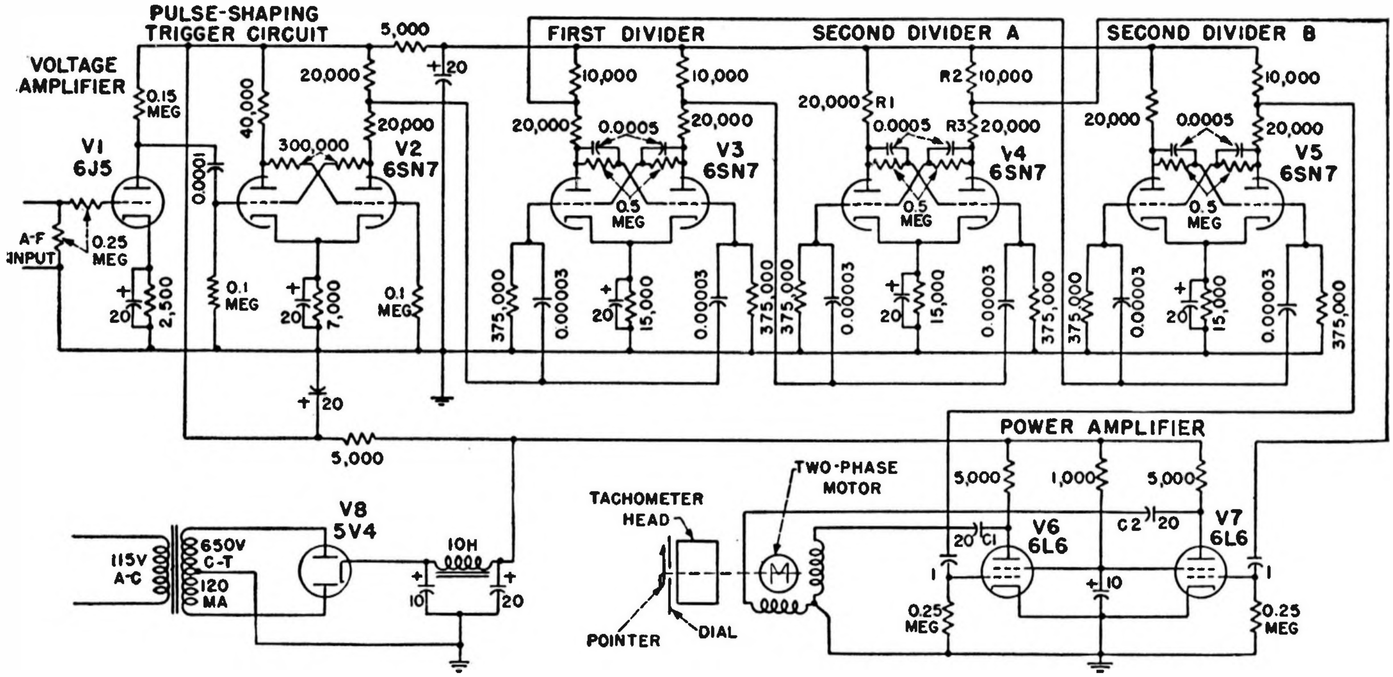

In this tachometric a-f meter, Eccles-Jordan scale-of-two trigger circuits divide the audio input frequency to be measured and simultaneously produce a two-phase output for driving a synchronous motor and magnetic drag tachometer. Frequencies from 30 to 450 cycles are indicated directly by the pointer with 0.5 per cent accuracy.

The use of a polyphase (two-phase) motor necessitates the inclusion of a phase-splitting circuit in order that the frequency-meter input be single-phase. Since the range of frequencies through which a synchronous motor will remain synchronous is limited (from about 100 to 150 cycles for a good 60-cycle motor), frequency dividers are required for range extension.

The Eccles-Jordan scale-of-two circuit provides a reliable frequency divider for extending frequency range and simultaneously producing a two-phase output from a single-phase input. Two dividers, each driven from a plate of the first divider, receive signals having 180 degrees difference in phase. Because of the frequency-dividing action, their outputs are 90 degrees out of phase. The principle underlying this arrangement is that the second subharmonics of two signals of the same frequency and of 180-degree phase displacement are 90 degrees out of phase.

If V_4 and V_5 drive power amplifiers whose loads are the fields of the synchronous motor, the motor will run at a speed proportional to one-fourth the input frequency.

The magnetic drag tachometer is used to operate a direct-reading indicator corresponding to the speed of the motor. It consists of a spring-loaded shaft, on which is mounted a pointer and a copper cup. A rotating permanent magnet within the cup, driven by the synchronous motor, sets up eddy currents in the cup, producing a shaft torque proportional to the speed of magnet rotation. The torque, acting against the spring, causes a shaft displacement proportional to the torque. The pointer indicates the speed on a dial calibrated in cycles per second.

The complete circuit is designed to operate from 30 to 450 cycles. The outputs from the frequency dividers are not taken directly from the plates but from taps in the load resistors, to prevent instability due to loading.

If one phase of a two-phase motor is reversed, the direction of rotation will be reversed. In order to prevent the instrument from reading backwards, the load resistors of the second dividers are made unequal. This unbalance ensures consistency in the firing order of the second dividers. The simultaneous reversal of both phases will not affect the direction of rotation. Therefore the first divider requires no unbalance.

The problem of varying input wave form is taken care of by trigger circuit V_2 preceding the first divider. Except that the input is applied to one grid and the static voltage distribution is changed, this circuit operates in a manner similar to the frequency divider. Its output is either a square or rectangular wave, regardless of input wave form. The only input limitation is that the unknown frequency be periodic. If it should be necessary to determine the average frequency of an aperiodic input, the trigger circuit would have to be replaced by some sort of integrating or averaging circuit.

Since the impedance of the motor varies with the frequency applied, the method of coupling the motor to the power amplifiers must be free of matching errors. This is easily done by using large electrolytic capacitors (20 μf for C_1 and C_2) directly between the plates and the motor.

Voltage amplifier V_1 precedes the trigger circuit. The sensitivity of the frequency meter is determined by the gain of the amplifier and can be extended as desired by the use of a pentode or another stage. Range extension can be accomplished through the use of additional frequency dividers preceding the first divider.

The power-amplifier design is determined chiefly by the requirements of the motor used. For a motor rated at about 50 ma at 100 volts (per phase), the circuits of V_6 and V_7 suffice. Variations, such as inverse feedback and class-B output, would probably be required if the motor were larger or a range of frequencies greater than 10 to 1 were to be used.

Edward Kasner, Tachometric Audio-frequency Meter, *Electronics*, February, 1947, p. 121.

Speed-control Circuit for Small Synchronous Motor

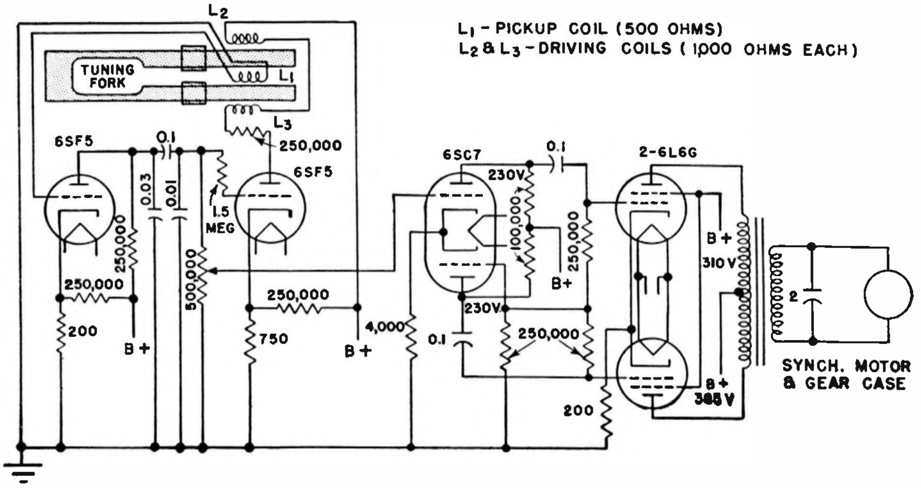

In this circuit of an electronic generator that feeds a synchronous motor, the temperature-compensated tuning fork that controls the frequency is driven by coils L_2 and L_3 in a regenerative circuit whose pickup coil is L_1. The succeeding a-f amplifier stages step up the power to meet the input requirements of the motor.

In the original application as a precision stroboscopic frequency meter, the motor drives an array of 12 identical translucent pattern disks that are geared together in such a way that the speed ratio between adjacent disks is the twelfth root of 2, or about 6 per cent, obtained with sufficient accuracy by successive use of the gear ratios 89/84 and 107/101 in alternation. The wheels are illuminated by the discharge tube of a flashing amplifier circuit.

Sliding weights on the tuning fork are calibrated in 100 steps covering a frequency range of 3 per cent above and below 55 cycles, the fork frequency. This range in combination with the 7 pattern wheels rotating at 12 different speeds is sufficient to give a stationary pattern for any frequency from 31.772 to 4,066.8 cycles. The frequency range can be extended considerably upward by using an external frequency divider. Frequencies up to 50 kc have been measured with the same degree of accuracy as the fundamental range, namely, 0.05 per cent.

The 440-cycle tone broadcast regularly on 5,000 kc by the National Bureau of Standards is adequate for checking the calibration, because an adjustment of the fork at any one frequency makes it correct for all other frequencies.

Earle L. Kent, Precision Stroboscopic Frequency Meter, *Electronics*, September, 1943, p. 120.

A Circuit for Synchronizing Electric Motors

Application of electronic controls in industry sometimes involves the synchronizing of several operations that are ultimately accomplished by electric motors. A simple method of maintaining synchronism of motors is suggested by the system employed in the SCR502, a semiportable radio direction finder. It employs two fixed Adcock antenna arrays, one being used from 1.5 to 10 mc and the other for 10- to 30-mc operation. Instantaneous visual azimuths are indicated on the screen of a 5-inch cathode-ray tube by means of deflection coils driven in synchronism with motor-driven goniometers that scan the output of their respective antenna arrays.

The motors that drive the goniometers operate on 115 volts, 60 cps, and are single-phase types rated at 1/60 horsepower. The motor that rotates the deflecting coils of the cro is a 1/4-horsepower synchronous 1,800-rpm unit. The motors are some distance apart and one of the problems is to maintain synchronism between them.

Open-close contacts are operated by eccentric cams on the drive shafts of the goniometer and the bearing-indicator drive motors. These two sets of contacts are wired in series, with one end grounded and the other end terminal connected to the grid of a 6SL7 tube. The contacts are so arranged that the indicator contactor is closed for about 270 degrees of its rotation and the goniometer contacts close for about 30 degrees of rotation during the time the contacts at the indicator are open. In normal synchronous operation, the two contactors never close at the same time, and therefore the grid of the 6SL7 is not grounded. In fact, the tube is biased to cutoff during the synchronous condition.

The circuit of the synchronizing unit is shown and consists of a twin-triode 6SL7 and a 2050 thyratron. When the first grid of the 6SL7 is cut off, the grid and cathode of the second triode are at the same potential so that this tube draws current through resistor R_1 and produces bias at the 2050 grid so that it does not draw current. The plate circuit of the 2050 contains a relay with its contacts arranged so that when the 2050 does not draw current, the a-c supply is connected to the goniometer drive motor.

If the motors are not synchronized on the same pole, then closing of the goniometer contactor will not occur during the open interval of the indicator contactor and, during some part of the revolution, the grid of the first half of the 6SL7 will be grounded. When this occurs, this tube draws plate current. Since each time the grid is grounded the tube draws current, pulses of voltage will appear across the load resistor and an associated *RC* circuit. After several pulses, the number depending upon the setting of the *No. of Intervals* control, the potential across the capacitor reaches the flashing voltage of the glow lamp.

When the glow lamp conducts, current flows through the resistance in series with it, overbiasing the second triode of the 6SL7. With this tube cut off, bias is removed from the 2050, which fires and operates the relay in its plate circuit, opening the power line to the goniometer motor. As the negative bias leaks off the second tube, its plate current rises and ultimately the thyratron is again shut off. The time interval during which current is cut off the goniometer motor depends upon the setting of the *Time Interval* control.

With the power circuit to the goniometer motor open, this motor slips behind the rotation of the indicator drive motor until the series contactors are again situated so that the series circuit in which they are connected no longer grounds the grid of the first half of the 6SL7. In other words, the synchronizing cycles continue until the two motors are in step. When the controls are properly set, there will be one, three, or five synchronizing cycles requiring approximately 1 to 3 seconds.

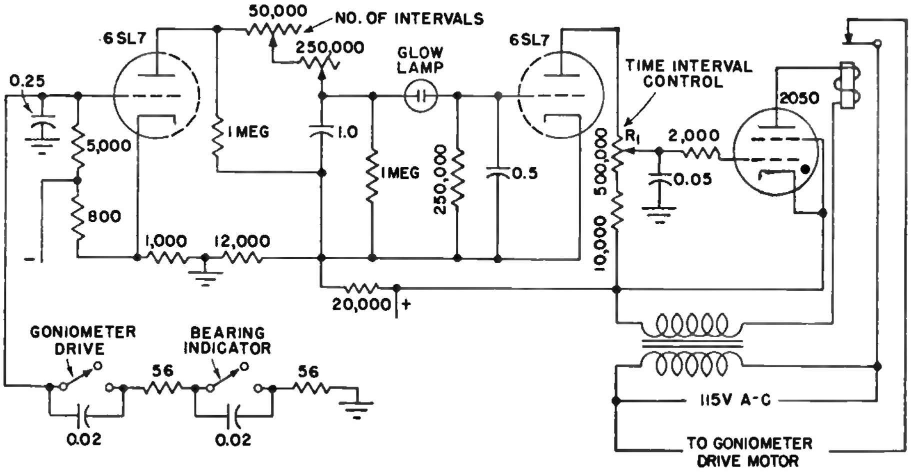

Synchronizing Electric Motors, *Electronics*, January, 1946, p. 166.

Class C Amplifier Circuit for Driving Small Synchronous Motor

In this circuit for providing automatic synchronization of a facsimile receiver to a transmitter, a stable tuning-fork oscillator is used as a frequency control and feeds a two-stage power amplifier which drives the synchronous motor which is coupled to the recording drum through gears and clutches. The oscillator supplies a 30-volt input to a power amplifier tube, which is transformer coupled to a pair of parallel power amplifier tubes. Class C operation is used for the power amplifier tubes to obtain maximum efficiency. The resonance characteristics of L_1 and the shunt 0.01-μf capacitor serve to produce a high voltage for the synchronous motor windings. Reactor L_1 should have a value of 0.9 henry. This is the incremental inductance with 80 ma of d-c plate current through its windings.

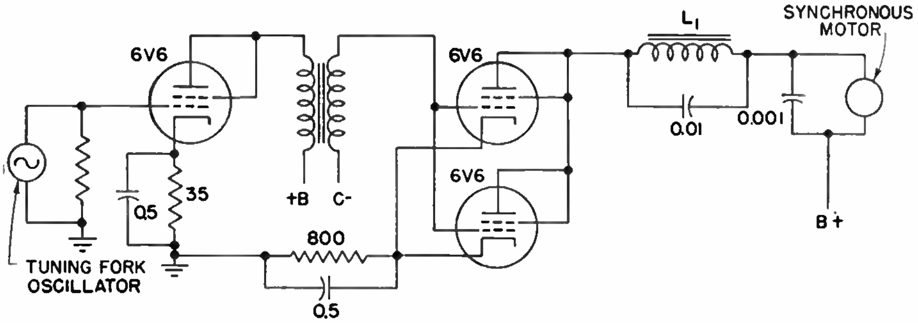

The plate circuit has a low-Q resonant characteristic, and considerable harmonics are generated. The voltage rises to the extent that corona effects are noticeable and insulation must be considered in wiring the plate circuit. Approximately 1,000 volts exist across the four series-coil windings of the synchronous motor.

This type of motor will not start by itself, and it requires an additional motive source to bring it up to speed. The characteristics are such that it will lock into synchronism from a higher speed but will stall completely at lower speeds.

Daniel Schulman, Facsimile Synchronizing Methods, *Electronics*, March, 1946, p. 131.

Motor Control Circuit for Vehicular-mounted Automatic Map Tracer

The electronic circuit for the odograph (automatic map tracer) utilizes phototubes and thyratrons to transfer the indications of a precision magnetic compass to a motor-operated plotting unit that is also actuated by a speedometer drive cable, causing a pencil to trace on an appropriate map the exact course taken by the vehicle.

The magnetic card assembly, enclosed in a glass bowl, has two mirrors assembled at an angle and oriented to face north. A focused beam of light shines through the glass bowl onto the card mirrors, and it is reflected back to mirrors on the outside of the housing for the light source. This housing and the phototubes and thyratrons are mounted on a revolving table geared to a flexible shaft that connects the compass with the plotting unit.

If this table is in correct alignment with the compass card, the light is reflected by the north-facing mirrors directly back into the aperture from which it comes. However, if the compass card is deflected by a change of heading of the vehicle, the beam of light strikes one or the other of the two mirrors mounted on the outside of the light housing and is reflected onto the cathode of one of the two phototubes. This fires the related thyratron, which energizes one of the electromagnetically operated clutch yokes in the plotting unit and thereby causes the driving motor in that unit to rotate the flexible shaft until the compass table is back in alignment with the compass card.

When plate voltage is first applied to the thyratrons by the power pack, no current is flowing through the 200-ohm rheostat serving as cathode-bias resistance, and one of the thyratrons will fire. (Theoretically, both tubes should fire simultaneously, but in practice one tube will nearly always fire first, since it is practically impossible to build two tubes with identical characteristics. If both fire, the power switch is momentarily turned off.)

Assume that thyratron *B* fires first. It permits current flow through the bias resistor, providing a voltage drop that prevents the other thyratron from firing. Plate current of thyratron *B* flows through clutch electromagnet *C*, actuating the clutch and causing the plotting-unit motor to rotate the compass table in one direction. At the same time, the 1.0-μf capacitor connected between the thyra-

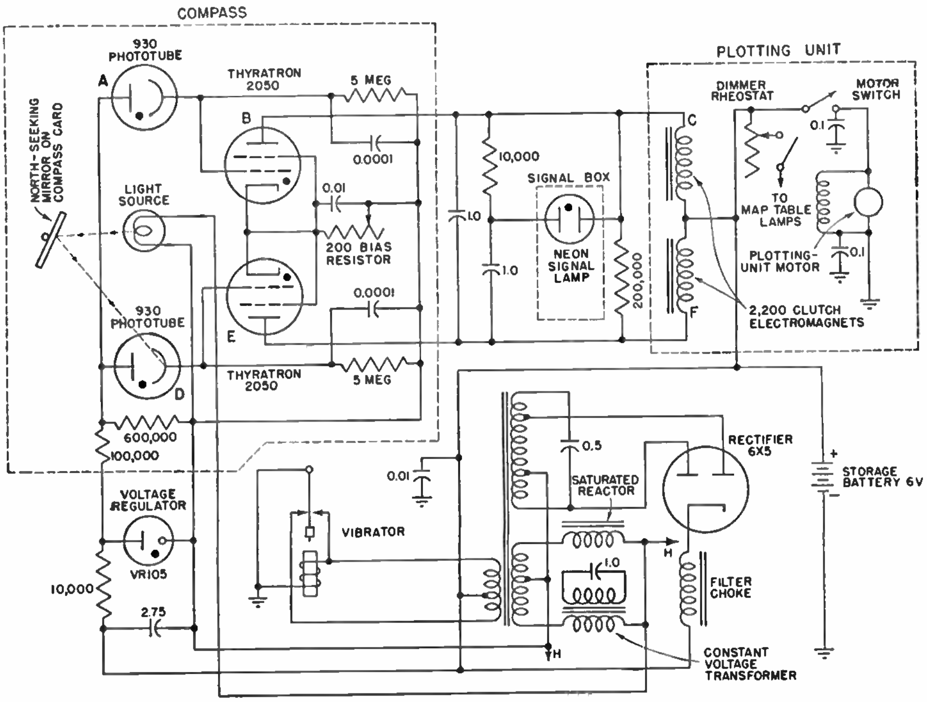

tron plates becomes charged to 185 volts approximately.

Rotation of the compass table in the direction associated with clutch *C* soon results in light being reflected from the compass-card mirror onto phototube *D*, which controls nonconducting thyratron *E*. This light reduces the resistance of the phototube, allowing current to flow through the 5-megohm resistor in the grid circuit of thyratron *E* in such a direction as to make the grid of *E* positive with respect to its cathode. As a result, this tube fires, and its plate-cathode voltage drops from 200 volts to 15 volts. For an instant both thyratrons are conducting, but the plate-to-plate capacitor discharges, placing a negative voltage of minus 170 volts on the plate of thyratron *B* long enough to block this tube and enable its grid to gain control.

Now thyratron *E* sends plate current through clutch *F*, causing the compass table to rotate in the opposite direction. Rotation continues until the light beam has swung over onto phototube *A*, triggering off thyratron *B* and thereby starting a new hunting cycle. This hunting action goes on continually while the odograph is in use, and circuit adjustments are normally such as to give a 5-degree hunt on each side of the compass course at a rate of approximately 100 to 115 complete cycles per minute.

Sensitivity of the thyratrons is controlled by adjusting the 200-ohm bias rheostat. Since a tube will fire on zero grid bias, if the resistance of the bias rheostat is entirely out of the circuit, the tube will fire regardless of the signal from the phototube.

At the other extreme, if the entire 200 ohms is in the cathode circuit, the thyratron will never fire. In practice, a setting is used between these two extremes, or at about 120 ohms. A lower resistance than this will tend to speed up the hunting cycles of the apparatus and to reduce the angle of hunt, while higher resistance will have the opposite effect.

The signal box contains a ¼-watt neon lamp that, in normal operation, glows on alternate electrodes in synchronism with the hunting action. This lamp is connected so that a 1-μf capacitor discharges through it with opposite polarity as the polarities of the two thyratron plates alternate in the hunting cycle. Thus one cathode of the neon lamp represents one of the thyratrons and its electromagnet, and the other cathode represents the other combination. Any variation in hunting action can be detected by observation of this signal lamp.

Two voltage regulators are incorporated in the power pack. A VR105 regulator tube keeps phototube anode voltages constant at approximately 105 volts despite battery voltage variations from 6 volts up to 8 volts. A resonant-type transformer in series with a saturated reactor holds the voltage of the light source and the thyratron heaters constant at 6.3 volts.

D. J. Faustman, Automatic Map Tracer for Land Navigation, *Electronics*, November, 1944, p. 94.

Gas Discharge Tube Checks Breaker Points in Ignition System

THE circuit shown contains a 6H6 half-wave rectifier connected in series with a resistor across the breaker points of an internal-combustion engine.

The resistor is shunted by a capacitor to minimize the error caused by the time required to deionize the 884. The 884 has its control grid connected to the anode of the rectifier, while the anode of the 884 is connected to the supply battery through a meter, a limiting resistor, and an adjustable resistor.

When the contact points are closed, no voltage drop exists across the input to the 6H6 and no voltage appears across the *RC* combination in the grid circuit of the 884. When the points open, an exponentially damped sinusoidal oscillation voltage appears across the breaker-point capacitor. The first half cycle of oscillation causes the ungrounded terminal of this capacitor to become negative with respect to ground. This causes a high negative potential to appear on the grid of 884, rapidly collecting the positive ions and extinguishing the gas discharge.

The rectifier prevents the positive impulses from appearing on the grid, while the capacitor prevents the grid voltage from falling to zero while the thermionic rectifier is nonconductive. As the oscillations die away, there is finally left impressed on the input leads the steady d-c potential of the battery, which is sufficient to prevent the initiation of discharge. The cam continues to rotate and the contact points close, short-circuiting the voltage input to the apparatus, whereupon the grid voltage of the 884 diminishes and the gas discharge once more is initiated as the grid voltage crosses the pickup potential of the 884. Therefore anode current flows at all times when the points are closed, and is interrupted while the points are opened. The plate meter of the 884 may be calibrated to read the percentage of time during which the contacts are closed.

The procedure followed in using the apparatus is to short-circuit the rectifier cathode to the cathode of the 884 and to

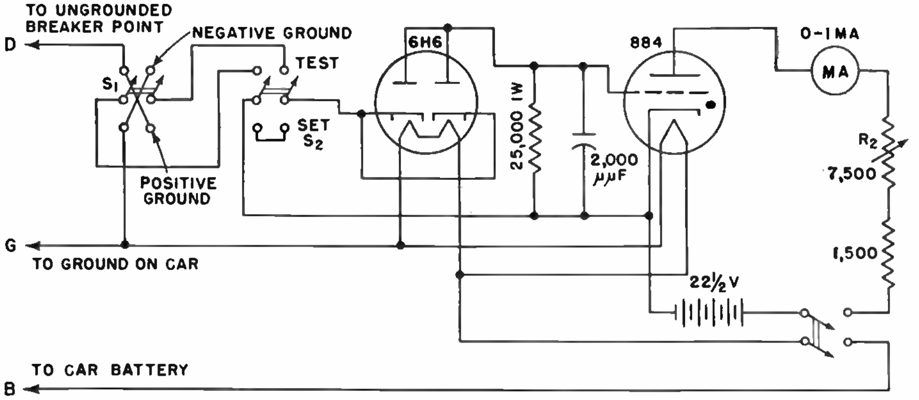

adjust resistor R_2 so that the meter is precisely at full scale, which may be calibrated to read 100 per cent. The short circuit is now removed and the apparatus connected to the ignition system, whereupon the percentage of contact closure time may be directly read.

With a cam having a given number of lobes, the time during which the contacts are closed may also be expressed as the number of degrees of cam rotation during which the contacts are maintained closed for one cycle of operation. In fact, this is the general practice in the field of automotive instruments and the meter is therefore calibrated in terms of cam angle, rather than percentage of contact closure time.

The damping characteristics of the meter movement are such that current impulses at the rate of 25 per second give substantially steady indications. During a test, the engine is run at a speed giving at least this number of interruptions each second, corresponding to 400 rpm for an eight-cylinder engine and 550 rpm for a six-cylinder engine of normal design.

Taking an eight-cylinder engine for an example, it is seen that the distributor shaft rotates at 200 rpm or 3⅓ rps. Any operational irregularities due to an eccentric cam or defective bearings will be cyclically repeated at this frequency, which is sufficiently low so that the damping of the meter is without effect, and they may be readily detected.

Polarity reversing switch S_1 is provided to accommodate the various types of battery installations, connecting the rectifier cathode to the negative breaker point in either positive-ground or negative-ground systems and at the same time connecting the cathode of the 884 and its associated circuits to the opposite contact. Switch S_2 has been added for convenience in making the initial calibration setting of the meter current.

G. V. Eltgroth, Checking Auto Breaker-points by Electronics, *Electronics*, March, 1942, p. 34.

Servo Motor Automatically Adjusts Power Supply

Although it was designed for laboratory use on microwave oscillators and amplifiers, the characteristics of this regulated supply are such that it should prove useful for many other applications which require high voltages with good flexibility and regulation, provided that the positive output can be grounded.

The servo-transformer unit consists of a three-phase autotransformer, to vary the primary voltage of the high-voltage transformer (and thus the d-c input of the electronic regulator), a reversible servo motor geared to the autotransformer, and a control circuit.

The regulator-tube voltage appears across the divider $R_1 - R_2 - R_3$. The voltage appearing across R_1 is compared with the independent plate supply and the difference is the bias for V_1, the left-hand section of the double triode. Similarly, the difference between the voltage appearing across $R_1 + R_2$ and the plate supply is the bias for V_2, at the right. The value of this voltage is greater than that applied to V_1.

With normal regulator-tube voltage, V_1 conducts and V_2 does not. Then the contacts of both relays are open and the motor is not operating. As the regulator-tube voltage becomes lower, the V_2 bias becomes less negative and this tube conducts, energizing the Raise relay.

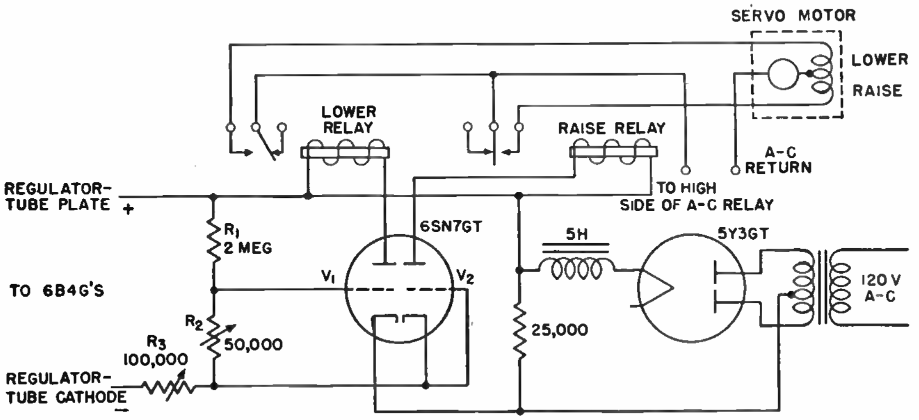

The bias of V_1 is also decreased, but since V_1 was already conducting, the change has no affect on the Lower relay. Thus the motor operates to restore the regulator-tube voltage, until the restored voltage cuts off V_2.

When the regulator-tube voltage becomes too high, the increased V_1 bias cuts off tube V_1. This deenergizes the Lower relay, thereby closing its contacts to operate the motor to lower the voltage to normal.

The normal voltage bandwidth can be adjusted by R_2. Its centerpoint is set by R_3. This servo control is necessarily a discontinuous type because a primary voltage correction should be made only when the regulator tube is getting too near the limit of its ability. Narrower bandwidth is not desirable.

Before power is applied to the transformer, or before the 6SN7GT is warm, the relays are in a position to lower the autotransformer. The failure of either the 6SN7GT or the 5Y3GT tube would result in a lowering of the transformer primary to zero. Thus this control circuit is inherently safe. This servo-transformer arrangement can be made to work with existing regulator circuits as well as with the one described.

Oliver Hoag, Power Supply for Microwave Equipment, *Electronics*, February, 1947, p. 110.

Servo Amplifier Circuit for Control of Split-field Series Motor

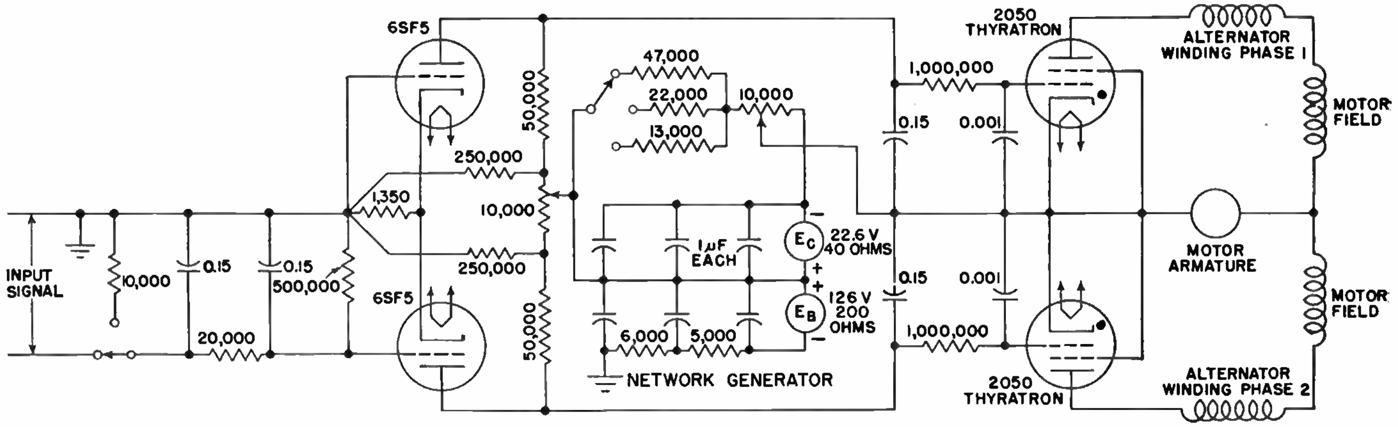

This servo system, used in the K8 gunsight, converts the voltages from a computing network into mechanical motion to offset the sight laterally and vertically. It involves a balanced d-c amplifier that is precise enough for an accurate computer and yet is rugged enough for use in an aircraft turret with attendant airplane vibration and gun shock.

This amplifier has a sensitivity of 20 millivolts and performs throughout a temperature range from 65 degrees below zero to 160 degrees above and a humidity range of 0 to 95 per cent.

A pair of matched 6SF5 triodes is used to control a pair of 2050 thyratrons that supply a split-field series motor. Balance and bias adjustments are provided to take care of any variations in tubes.

The thyratron plate supply is obtained from a specially designed four-phase alternator. One phase is used for each of the four thyratrons (two for each of the two identical amplifiers used). The direction of rotation of the motor which offsets the sight is determined by which field is energized. This depends on which thyratron fires, which in turn is determined by the polarity of the d-c signal applied to the input of the 6SF5 tubes.

The motor continues to drive until the voltage from the so-called bucking potentiometer, which is also driven by the motor at the same time the sight is offset, equals the voltage from the computing network. When this occurs, the input to the amplifier is reduced below the amplifier threshold sensitivity of 10 or 20 millivolts, and the thyratrons stop firing.

The bucking potentiometers are supplied from a permanent-magnet generator driven by the same motor that drives the permanent-magnet generators used for supplying the computing network. In this way all the voltages of both the network and the bucking potentiometers vary together so that a null system is obtained.

H. Erwin Hale, The K-8 Computing Gunsight, *Electronics*, January, 1945, p. 94.

Phototube-thyratron Control Circuit for Drag-cup Motors

A PAIR of thyratrons operating directly from the a-c line in this bridge-type photoelectric control circuit provides control over both speed and direction of low-inertia drag-cup induction motors. Illumination of one phototube will cause the motor to run in one direction at a speed approximately proportional to illumination, and illumination of the other phototube will similarly determine speed in the opposite direction. With both phototubes equally lighted or with no light at all, the motor stands still. With illumination of both phototubes, the phototube receiving the most light controls the direction, and speed is proportional to the difference in illumination.

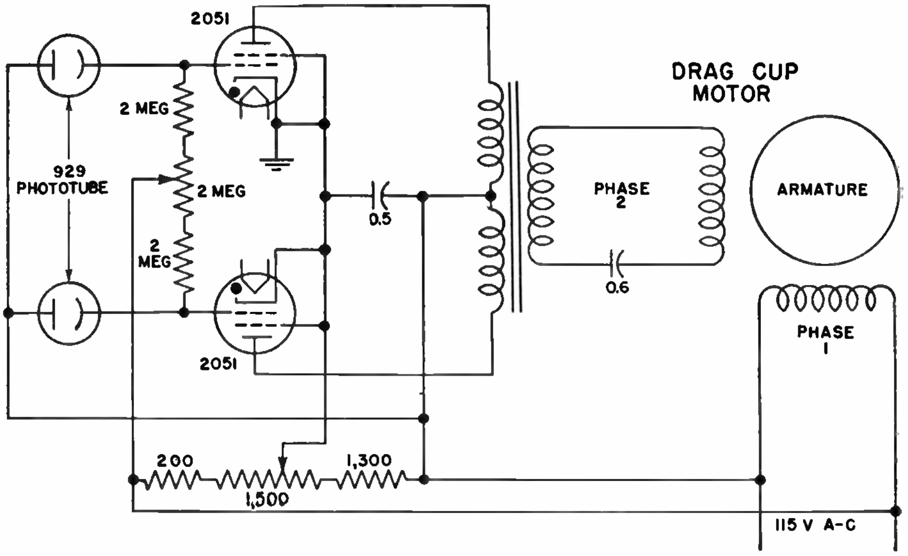

A push-pull class B output transformer matches the thyratrons to the motor. A 2-megohm potentiometer in the grid circuit permits balancing to compensate for slight differences in the characteristics of the tubes. The 0.5-μf capacitor across the plate supply provides correct phasing to stop the thyratrons from firing, while the 0.6-μf capacitor, in combination with the other phase-shifting circuit elements, provides the 90-degree phase shift required for optimum operation of the motor.

Edward M. Glaser, Multiwinding Motors for Electronic Uses, *Electronic Industries*, April, 1944, p. 102.

Antihunt Filter Network for Servo-motor Amplifier

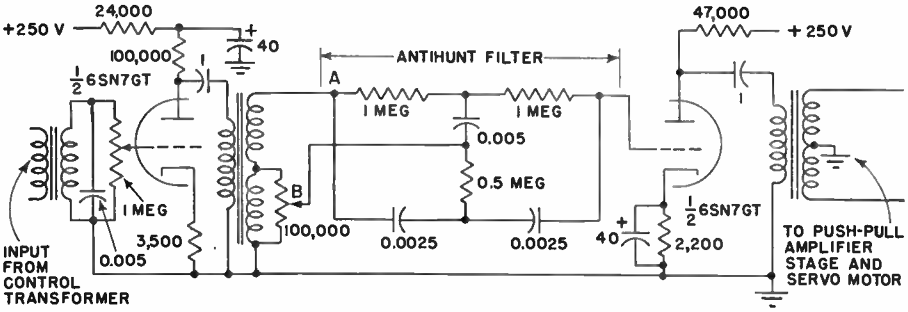

THIS antihunt filter network markedly improves the action of a servo system following any irregular motion, and it should have wide application in amplifiers for servo motors.

An incoming error voltage is amplified by the input transformer, which is tuned to 60 cycles by a capacitor across the secondary. The potentiometer between the input transformer and the triode amplifier serves as a gain control. The output of the triode is fed to both the filter network and a second potentiometer. The amplified error voltage between *A* and *B* is applied to the network. If the input is exactly 60 cycles, as when the control transformer is following the synchro with a small constant lag, the high impedance of the filter at 60 cycles results in zero antihunt voltage.

The direct input voltage between point *B* and ground is passed to the second triode and amplified. If the control transformer increasingly lags or leads, however, the input voltage will have components higher and lower than 60 cycles. Since the parallel T network has a much lower impedance to these frequencies, they will be applied to the second triode, and this antihunt voltage will be amplified and used to control the motor. In practice, the second potentiometer is adjusted to give the correct balance of antihunt and direct input voltage. Too large a percentage of antihunt results in a system that falls too far short of its correct position; too little antihunt causes oscillation of the system about the correct point.

Finn J. Larsen, Ultrasonic Trainer Circuits, *Electronics*, June, 1946, p. 126.

Electronic Regulator Circuit for Waste-gate Motor of Aircraft Turbosupercharger

A FOUR-TUBE electronic circuit here regulates the speed of all turbosuperchargers for the engines of a large airplane to provide constant engine power at any altitude. The amplifier responds to the resultant a-c voltage from an a-c bridge circuit made up of six potentiometers and three power transformer windings (all on the same core and energized with 400-cycle aircraft power). The turbo-boost selector potentiometer is the pilot's only control over the system. The other potentiometers serve as pressure-boost control, overspeed control, accelerometer for anticipating pressure increases and preventing overshooting, and balancing.

The amplifier determines which direction of rotation is needed for the waste-gate motor that controls the amount of exhaust gases passing through the turbine wheel to drive the compressor, and it also provides the required power for the waste-gate motor. This is a two-phase reversible electric motor that positions the waste gate through a mechanical linkage. As this motor rotates, it operates a balancing potentiometer that delivers an alternating voltage opposed to the resultant of the other potentiometer voltages. When the motor has rotated just far enough to make the two voltages neutralize each other exactly, amplifier power is cut off and the motor stops. The amount of waste-gate movement is thus determined by the magnitude of the original control, and there is no overshooting beyond the desired new position.

In effect, the alternating voltages across the six potentiometers either add to or subtract from one another. For the complete bridge to be balanced, these voltages must cancel, so that no voltage exists between the uppermost wiper and the bottom grounded wiper.

Voltages that give one of the many possible balances are indicated. Here there are alternating voltages of 3 and 12 volts which act in one direction from ground and which offset the 15-volt center section acting in the other direction from ground. If the pilot should unbalance this bridge by moving the turbo-boost selector 3 volts to the left (for less power), the resulting alternating voltage of 3 volts would make the amplifier and waste-gate motor close the waste gate and drive its balancing potentiometer 3 volts to the left so as to rebalance the bridge at the new power condition selected by the pilot. Movement of any other potentiometer wiper would likewise initiate waste-gate action and rebalancing.

The 7Y4 rectifier tube converts the 115-volt 400-cycle aircraft power to a high direct voltage for the two plates of the 7F7 tube. All other tubes and parts operate from alternating voltages.

When the bridge is balanced, no a-c potentials exist in the 7F7 circuits, and hence no alternating voltage is fed to the 7C5 tubes. Under this condition, each of these tubes passes only a small current (determined by the self-acquired bias on the control grids) on alternate half cycles, with this current flowing through the amplifier-excited field winding of the waste-gate motor and acting as a brake on the motor armature. (This balanced-bridge current, the wave form of which is shown, causes the resultant motor field to reverse every half cycle instead of rotating in one direction.)

When the bridge is unbalanced by movement of one of the potentiometer wipers to the right, the positive voltage pulse (with respect to ground) from the unbalanced bridge acts on the control grids of tubes 1 and 2 after undergoing amplification in the two sections of the 7F7 tube, but only tube 1 conducts, since the plate of tube 2 is negative at this instant. Thus tube 1 supplies current to the amplifier-excited field winding of the waste-gate motor on alternate half cycles, causing, say, clockwise rotation.

When polarities in both transformers

have reversed 1/800 second later, the grids of tubes 1 and 2 are both negative, and hence no power flows from the amplifier to the motor.

Movement of the upper potentiometer to the right thus causes clockwise rotation of the waste-gate motor. A similar analysis will show that movement of the potentiometer to the left will cause counterclockwise rotation of the motor.

Under both conditions of unbalance the 7C5 tubes deliver positive pulses with time intervals between them. For proper operation of the waste-gate motor, however, it is necessary to have a-c instead of d-c impulses flowing through the amplifier-excited winding. Therefore a capacitor of the correct size is connected in parallel with the field winding to form an oscillating circuit. The current resulting from operation of one tube is then half a cycle out of phase with the current resulting from operation of the other tube—exactly what is required to reverse the direction of the rotating magnetic field of the squirrel-cage induction motor driving the waste gate.

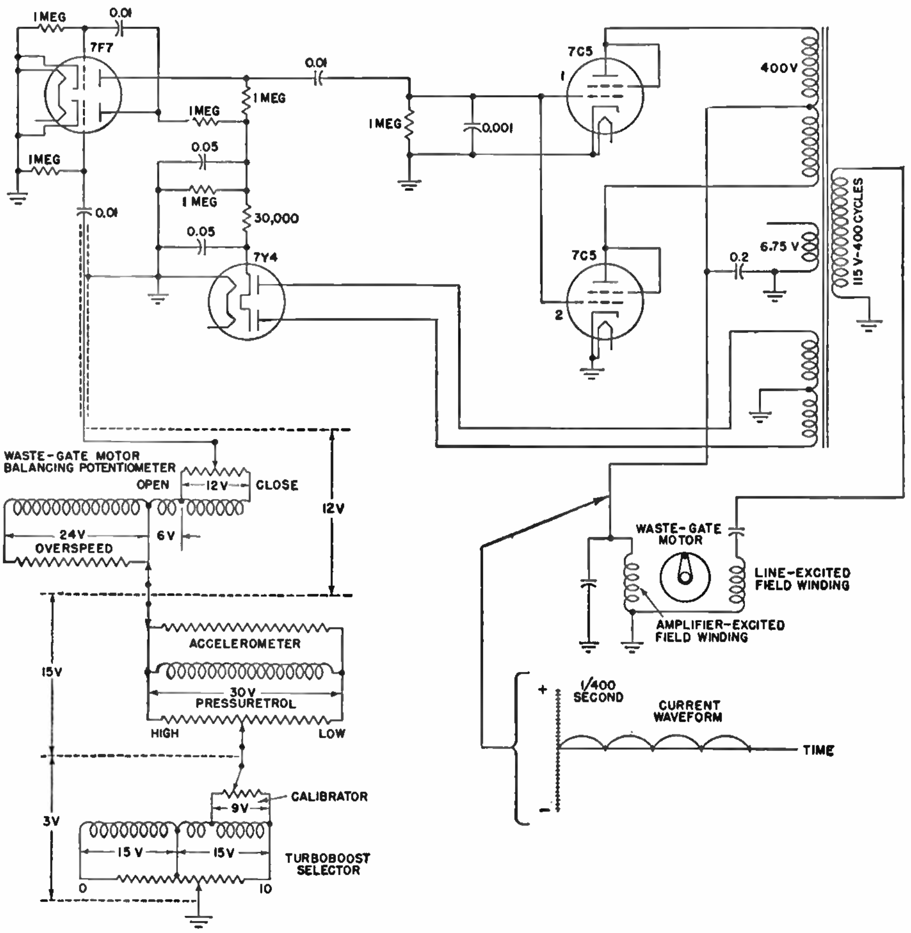

Willis H. Gille and H. T. Sparrow, Electronic Turbo Regulator for Multiengine Airplanes, *Electronics*, May, 1944, p. 108.

Feed Motor Control Circuit for Contouring Machine

This electronic positioning follow-up circuit for an automatic contouring machine accomplishes its purpose by causing a stylus to follow the contours of a master templet, or pattern. The position of the stylus relative to the templet is converted into quadrature signals that are mixed to give a vector signal indicative of the direction and distance the stylus has moved. The phase of the signal governs speed and direction of two motors, one geared to the cross-feed lead screw and the other geared to the longitudinal feed lead screw. The arrangement is highly accurate, is continuous instead of step by step, drives the tool at constant travel speed, and is flexible in its control of the machine tool.

The stylus of the magnetic tracing head is mechanically linked to the movable armatures of four variable inductors serving as tracer coils. The axis of each set of tracer-head coils is parallel to the corresponding feed motion. The force required to deflect the stylus is low, approximately 4 ounces for a 0.01-inch deflection.

When the templet is in contact with the stylus, the tracing head generates signals that, after being amplified, mixed, bent, and translated, are fed into the motor control panel. This panel in turn controls the speed and direction of rotation of the corresponding feed motors to drive the movable table with the templet and cutting tool mounted on it, so that the stylus feels along the edge of the templet.

A 2,000-cycle a-c voltage from a vacuum-tube oscillator and power amplifier (of conventional design, and hence not shown) is used for faster speed of response and more efficient use of the variable inductance in the tracing head. The voltage from the power amplifier is fed into a phase-shift bridge, which by means of an *RC* combination provides two output voltages 90 degrees out of phase, designated reference and quadrature, which are fed to the corresponding translator circuits. In addition, the reference voltage is fed to the bridge circuit containing tracer inductors 1 and 3, and the quadrature voltage is fed to another bridge circuit containing tracer inductors 2 and 4.

With no deflection of the tracing-head stylus, both bridge circuits are balanced and there is no output voltage from either bridge circuit. The tracing head is so constructed mechanically that a deflection of the stylus changes the air gaps of one or both sets of inductors, resulting in an output voltage from one or both bridge circuits. The vector of these two output voltages will be directly proportional to the stylus deflection, both in magnitude and direction.

The 2,000-cycle output voltages of the two bridge circuits are fed into two amplifier circuits, one for each bridge, which amplify the relatively weak bridge output voltages to workable levels and feed them into the mixer circuit. A single vector signal voltage is obtained from the mixer, with its magnitude and phase dependent upon the magnitude and direction of stylus deflection.

The bender circuit shifts the phase of this signal voltage in proportion to its magnitude. Without this circuit, the templet would be shifted in the same direction that the stylus is deflected, resulting in damage to stylus, templet, or tool. With the bender circuit, if stylus deflection is sufficient to give a phase shift of 90 degrees, the templet will move in a direction tangential to the rim of the stylus instead of into or normal to the stylus.

The signal voltage from the mixer is

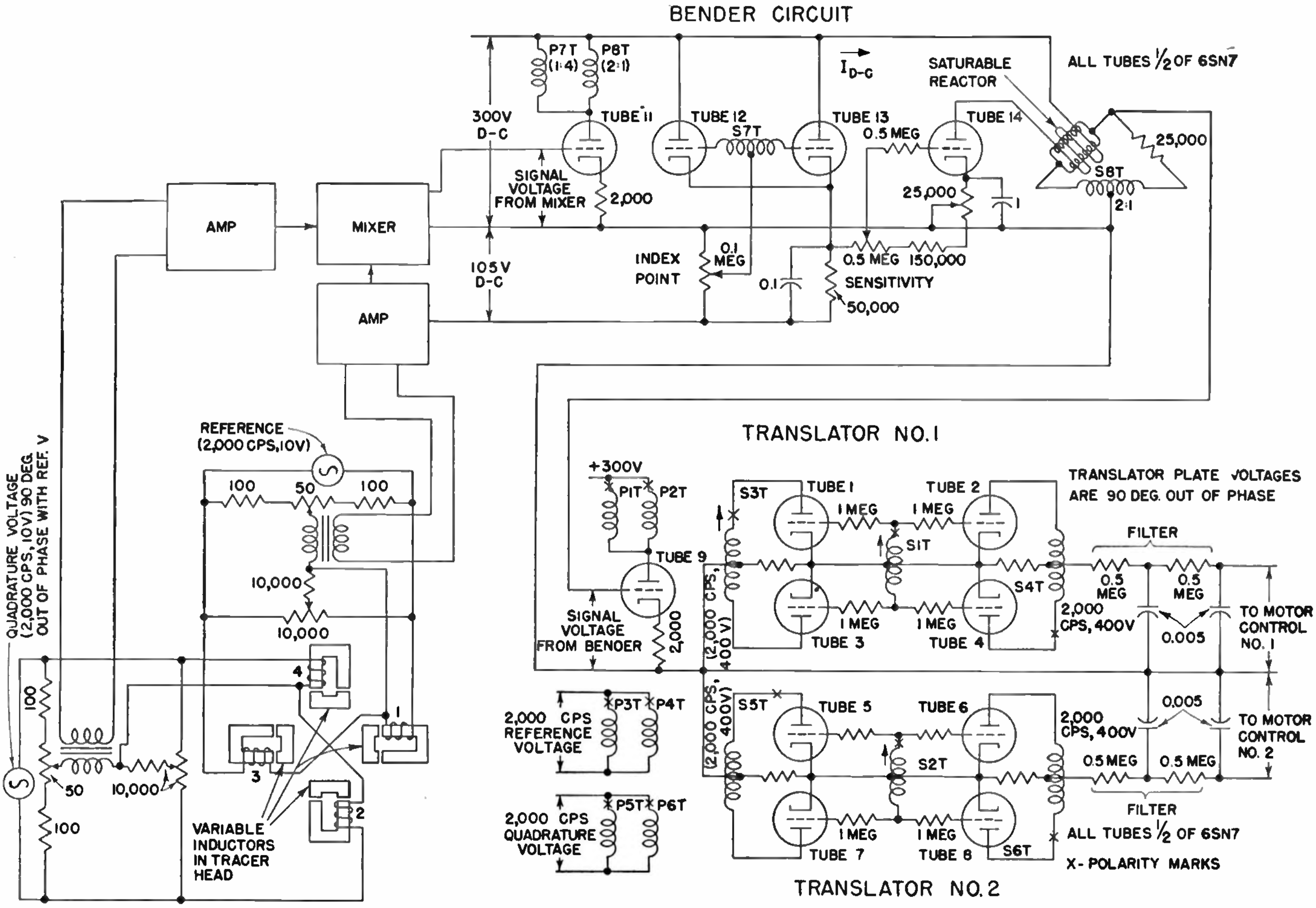

fed into the grid of tube 11 in the bender circuit, and it is fed, in turn, through transformers 7T and 8T into a cathode-follower rectifier circuit (tubes 12 and 13) and also into a saturable-reactor phase-shift bridge. The amount of phase shift obtained in this bridge will depend on the amount of direct current flowing through the d-c winding of the saturable reactor. The amount of direct current flowing through tube 14 will, in turn, depend on how much the tube is turned on by the grid voltage. The grid voltage is a d-c voltage, proportional to the magnitude of the signal voltage, obtained from the cathode-follower rectifier circuit.

The combination of the directional signal voltage obtained from the tracing head and the phase-shifting action of the bender circuit gives the guiding characteristic needed to follow the contours of a templet. Once the templet is brought into contact with the stylus, it starts moving in a direction tangential to the stylus and will continue to do so until stopped by the operator.

When a corner or change of slope is reached, the direction of stylus deflection changes, and the templet will tend to run in a different direction. If the stylus tends to dig into or lose contact with the edge of the templet, the bender circuit corrects this tendency by changing the amount of phase shift and thus keeps the magnitude of stylus deflection constant.

The 2,000-cycle output signal voltage from the bender circuit is fed (through tube 9 and transformers 1T and 2T) to the grids of the tubes of two translator circuits, identical except that one has the 2,000-cycle reference voltage from the oscillator applied to the plates of the translator tubes, while the other uses the 2,000-cycle quadrature voltage.

The function of each translator circuit is to provide a d-c voltage which can be used to govern the speed and direction of the feed motor corresponding to that translator. Each translator output voltage, filtered, is a d-c voltage proportional to the cosine of the phase angle between the signal voltage on the grids and the reference or quadrature voltage on the plates.

Because the plate voltages have a 90-degree phase relationship, translator No. 1 will have a d-c output voltage proportional to the cosine of the phase angle between the signal voltage and the reference voltage, while translator No. 2 has an output voltage proportional to the sine of the same phase angle. The polarity depends upon that of the function. Consequently, the two motors have a sine-cosine relationship so that the vector sum of the two feed speeds is constant, the magnitude depending on setting of the contouring-speed potentiometer, and the direction depending on the slope of the templet.

The two d-c output voltages are then applied, through suitable electronic control circuits, to the corresponding feed motors that drive the cross and longitudinal feeds of the movable work table. The motor control is such that it holds a motor speed proportional to the magnitude of the d-c output voltages from the corresponding translator, and runs the motor in a direction depending on the polarity of that voltage. Consequently, a constant tool-travel speed, or speed of movement of the stylus along the edge of the templet, is maintained, regardless of the direction of travel.

With a tool-travel speed along the work of 1 inch a minute, the maximum error was less than 0.001 inch and occurred, as would be expected, where the direction of tool travel had to change rapidly. The error on a relatively larger radius (approximately ½ inch) was less than half of the above. At a tool-travel speed of 10 inches a minute, errors between finished pieces of work were approximately 0.003 inch.

J. M. Morgan, Machine-tool Contour Controller, *Electronics*, October, 1946, p. 92.

Exciter Regulator for Variable-frequency Single-phase Alternator

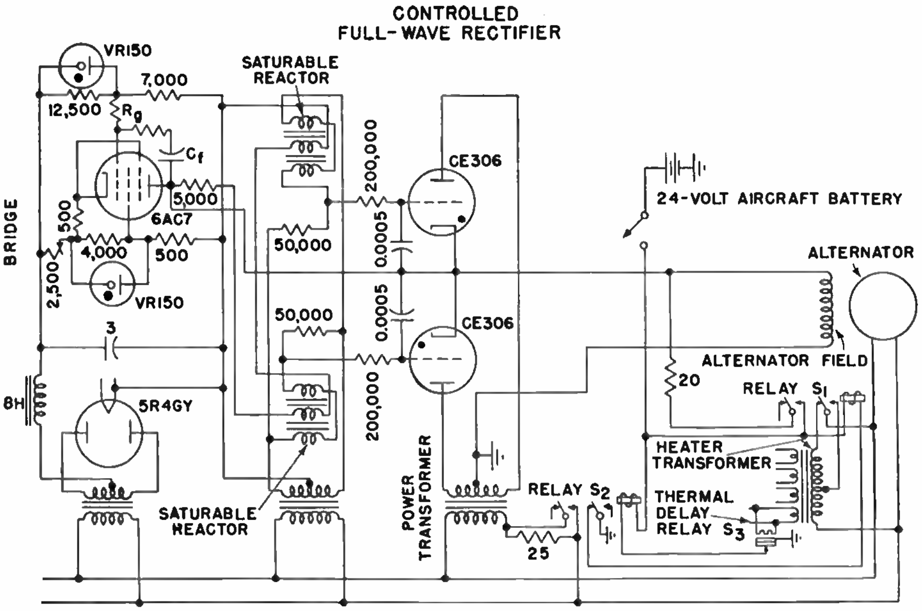

Over a frequency range of 380 to 1,000 cycles, this electronic exciter controlled by an electronic voltage regulator is capable of maintaining constant voltage with an accuracy of 2 per cent under steady-state conditions, and will recover completely from sudden application of full load in less than 0.05 second.

When battery voltage is applied to the unit, relay S_1 is energized through a normally closed contact on relay S_2. Closing of relay S_1 applies battery voltage to the alternator field and also connects one side of the a-c bus to a tap on the primary of the heater transformer. The tap is adjusted to give approximately 60 per cent rated heater voltage at the lowest speed at which the unit is to be started. At this voltage, ionization starts in the thyratrons, the bridge calls for full thyratron output, and the rectified voltage from the thyratrons adds to the battery voltage to increase the excitation and a-c voltage cumulatively until normal voltage is reached.

A resistance in series with the power-transformer primary limits the current flow through the thyratrons during the starting period. A thermal time-delay relay S_3, having characteristics which closely approximate those of the thyratrons, is connected across one of the heater circuits. When the thyratrons have reached operating temperature, S_3 closes and energizes S_2. S_2 short-circuits the resistance in series with the power-transformer primary and also de-energizes S_1; thus the heater primary is switched from tap to full winding and, at the same time, the battery circuit is opened.

When starting at the highest operating speeds, the heater voltage is approximately 50 per cent above rated voltage. The thyratrons are protected against overheating by the characteristics of the thermal relay, but the life of the amplifier and rectifier tubes may be shortened because of their smaller thermal capacity.

A sudden change in a-c voltage, with a corresponding change in bridge voltage, causes current proportional to the rate of change of voltage to flow through capacitor C_f. This current, flowing through R_g, produces a potential on the grid that tends to oppose the change produced by the change in bridge voltage. The result is to slow down the response and to prevent overshooting. The cathode resistor also provides degenerative feedback and aids in preventing hunting.

Paul T. Hadley, Arthur W. Forsberg, and O. Krauer, Exciter-regulator for Aircraft Alternators, *Electronics*, July, 1946, p. 120.

Automatic Ship Steering with Electronic Control Circuit

This circuit, used in an automatic steering apparatus for ships, is operated from a magnetic compass by means of phototubes.

The compass card of an ordinary magnetic compass carries a mirror that reflects a beam of light, from a source just above it, to a system of prisms and three phototubes. When the ship is on course, the middle phototube is illuminated. Any deviation throws the light on to one of the side phototubes, and this starts a motor that moves the steering wheel as required. This motor is coupled through gearing, a differential gear, and two autosyn motors back to the frame carrying the phototubes, thus moving them back to the light beam as the steering wheel is moved. When the light beam shines on the middle phototube again, the motor stops. The effect is to make the movement of the steering wheel proportional to the input-output deviation.

The function of the variable gearing is to alter this proportionality to suit the particular ship. The function of the differential gear is to change the course by changing the angular displacement between the rudder and the binnacle head carrying the phototubes. The autosyn motors and connections take the place of a long flexible shaft between the compass and the rest of the apparatus. The dummy compass card acts as a repeater of the automatic steering compass and gives the course of the ship.

The phototube currents are fed through cables up to 40 feet long to the amplifier.

In the cycle of operation, an increase of light on one phototube decreases the plate current of one 6L7; hence the negative bias on the gas triode C6A is decreased and current is passed to the steering motor armature through one of its series fields. The motor turns in the appropriate direction to produce rudder torque to send the ship back toward the desired course, and also turns the autosyn follow-up system to restore the normal relation between the light beam and phototubes that operate to stop the steering motor.

If it is assumed that the light beam falls on the left phototube, this will apply negative bias to grid 1 of the 6L7. If the beam continues to move rapidly past this phototube, grid 3 of the 6L7 ensures that the motor continues to run, because grid 3 is negative so long as there is no light on the middle phototube. A special relay is used for this so that both rectifiers do not go on simultaneously. This relay has two coils (marked 1 and 2) in the anode circuit of the C6A tubes, and two pairs of contacts. This relay is held mechanically either in position 1 by a spring or in position 2 by a latch. When coil 2 is energized, it pulls the arm over to position 2, where it is latched, and coil 1 releases the latch so that the arm returns to position 1.

As long as the middle phototube is dark, the 6C5 on the right puts a negative bias on grid 3 of the appropriate 6L7 so that the latching function is applied to the proper C6A and the motor continues to run in the appropriate direction to return the light to the middle phototube.

This middle phototube also operates an alarm circuit to warn the navigating officer of an unusual deviation of the ship from the course that he has set. If, in the event of an unusual deviation of the ship or of any failure of the electro-optical-mechanical system, the light beam does not illuminate the middle phototube, the anode current of the left-hand 6C5 is cut off and the capacitor shunting the alarm relay coil discharges and rings the alarm in 7 seconds if the unusual condition is not corrected.

The C6A tubes are supplied with an a-c grid voltage lagging the anode voltage by 90 degrees in order to give smooth control of the motor current by means of the d-c bias supplied by the 6L7 tubes. This phase is adjustable to vary the top speed of the motor and the initial starting current. A thermionic time delay in the application of the C6A anode voltage is supplied by a 2A5 operated as a diode. This gives 40-second time delay. The capacitors across the various load resistors prevent a-c pickup, which would give irregular firing of the C6A tubes. Capacitors are shunted across the motor to give increased torque and to improve the C6A control characteristics under heavy loads. A limit switch is provided to prevent the steering motor from turning the rudder control past its normal limits.

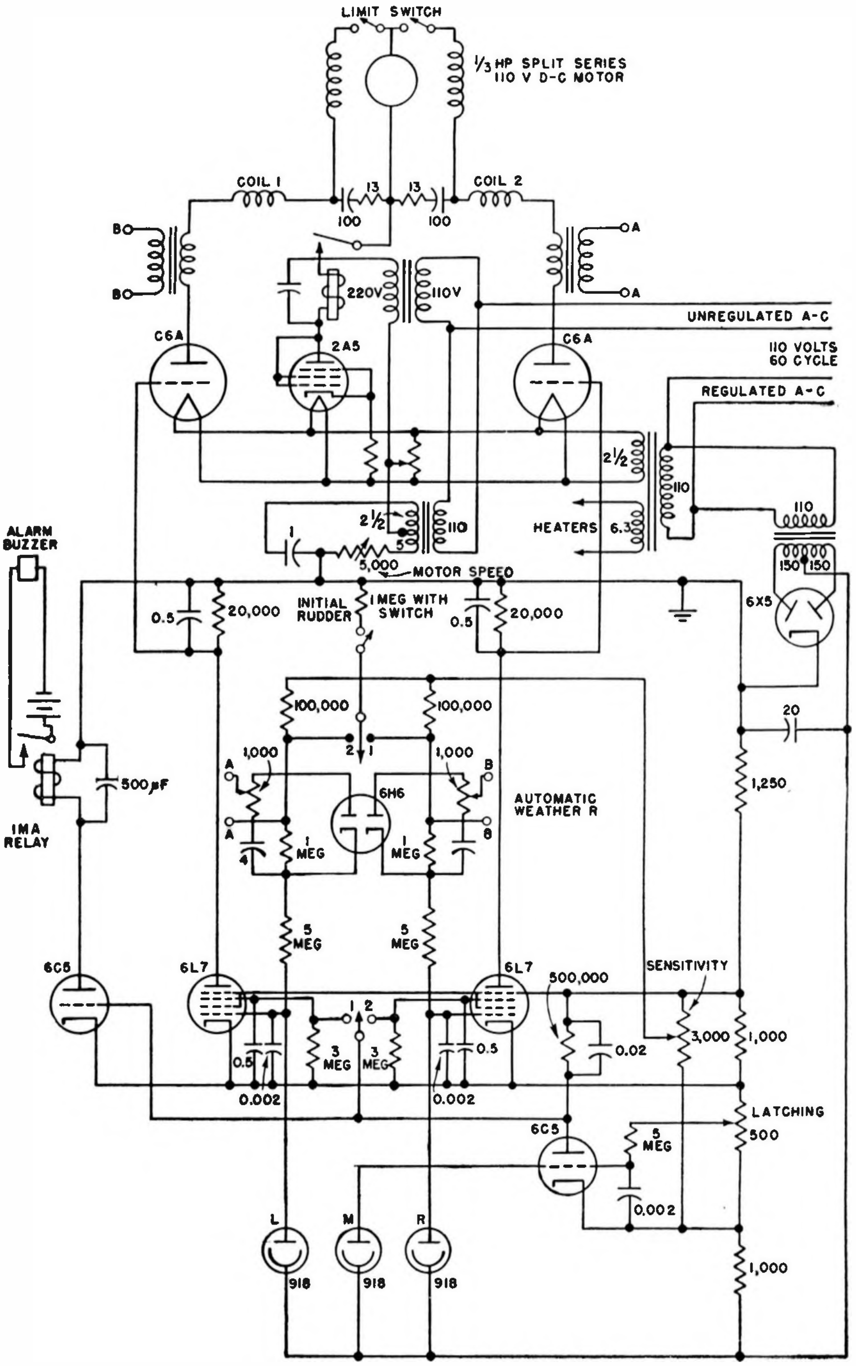

Britton Chance, Electronic Control for Ship Steering, *Electronics*, June, 1939, p. 41.

MULTIVIBRATOR CIRCUITS

Symmetrical Twin-triode Multivibrator Circuit

In this basic multivibrator circuit, grid returns are made to the cathode, and corresponding circuit elements used in conjunction with the two tubes are identical. The frequency depends chiefly upon the time constant and in most cases this can be simplified to R_GC_C with little error. For grid returns to the cathodes as shown, the frequency is approximately $0.3/R_GC_C$, but it also depends to a small extent on the tube characteristics and the supply voltage. Connecting the grid returns to the plate supply lead results in a higher fequency, approximately equal to $1/R_GC_C$. Frequency variation can be obtained by connecting the grid returns to an adjustable positive voltage. The amplitude of the generated waves is proportional to the supply voltage, and is only slightly affected by changes in the grid return connection. At high frequencies, distributed capacitances reduce the amplitude and make calculation of frequency difficult.

Insertion of resistors R_C in the grid leads of the symmetrical circuit results in a plate-voltage wave form that is approximately a square wave. The frequency of oscillation is affected only slightly by the addition of these resistors.

Norman W. Mather, Multivibrator Circuits, *Electronics*, October, 1946, p. 136.

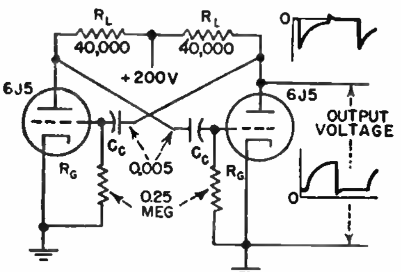

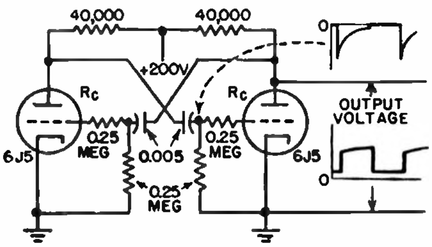

Asymmetrical Twin-triode Multivibrator

This circuit is the same as that of the symmetrical multivibrator except that corresponding circuit elements used in conjunction with the two tubes are dissimilar. One or both of the grid returns may be made to a positive voltage. The tubes used may be of different types. The frequency of oscillation can be estimated by calculating a pseudo frequency for each tube as if the circuit were symmetrical. The approximate frequency of the asymmetrical multivibrator is then $2f_1f_2/(f_1+f_2)$ where f_1 and f_2 are the pseudo frequencies. Oscillation can be obtained with widely different circuit components, giving considerable design leeway.

Norman W. Mather, Multivibrator Circuits, *Electronics*, October, 1946, p. 136.

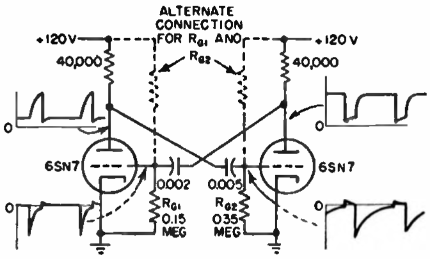

Synchronizing Arrangements for Symmetrical Multivibrators

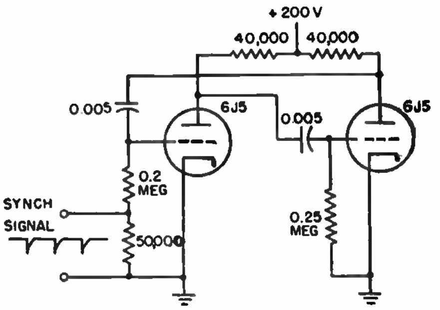

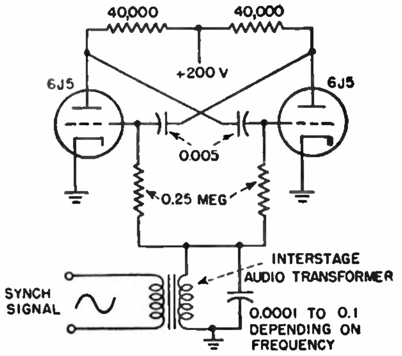

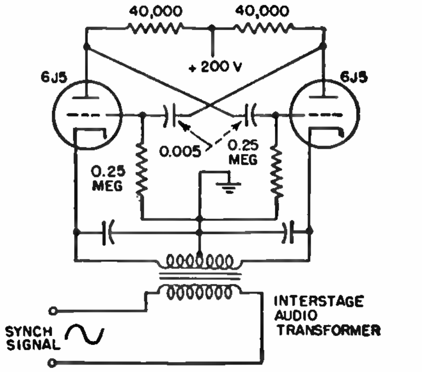

Three methods of injecting synchronizing signals into a free-running multivibrator for control of its operating frequency are shown here. The left-hand circuit provides synch input to one grid and tends to favor the odd submultiples of the synchronizing frequency when a sine-wave synchronizing signal is used. When pulses are used, synchronization occurs more readily with negative pulses. The center circuit provides a synch input to both grids with the same phase. It tends to favor even submultiples of the synchronizing frequency, and it should not be used when frequency ratio is 1:1. The right-hand circuit illustrates a method of injecting the synchronizing signal so that it is out of phase on the cathodes. This circuit tends to favor odd submultiples of the synchronizing frequency applied through the transformer.

Norman W. Mather, Multivibrator Circuits, *Electronics*, October, 1946, p. 136.

Combination Multivibrator and Coincidence Selector for Triggering Radiosonde Oscillator

In this circuit for keying the transmitter of cosmic-ray radiosonde equipment in response to impulses from Geiger counters, as well as transmitting barometric pressure data at regular intervals during the flight of the free balloon, there is normally sufficient grid bias on the oscillator tube to prevent oscillation. When a cosmic-ray impulse is received simultaneously on two Geiger counters and passed through amplifiers and the coincidence-selecting circuit composed of the 1B4 tubes, the positive impulse at the grid of the 1A5 power tube will initiate a single cycle of oscillation in the multivibrator consisting of the 1B4 coincidence-selecting tubes and the 1A5. This automatically removes the bias from the oscillator tube and a signal is radiated for the duration of the multivibrator pulse.

The Geiger-counter amplifiers, not shown in the diagrams, each have two stages ahead of the coincidence-selecting stage. In order to have the correct polarity of pulse at the coincidence-selecting stage, the counter pulse is taken from the wire of the counter. Uniformity of pulse to the coincidence-selecting stage is secured by using multivibrator action around the two amplifier stages.

Barometric and temperature signals are transmitted by contact of a clock-driven arm with the indicating arms of the barometer and thermometer, thus using the Olland cycle. During the contact, the bias is removed from the grid of the 1A5 power tube. The multivibrator formed by this tube and the 1B4 coincidence-selecting stages will oscillate at its natural frequency and transmit a high-frequency audio note. At the receiver the barometer and thermometer signals will accordingly be easily distinguished from the cosmic-ray signals. For simplicity in the diagram, filament wiring has been omitted.

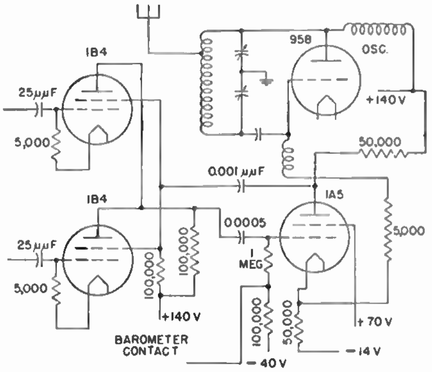

W. H. Pickering, Cosmic Ray Radiosonde, *Rev. Sci. Instruments*, June, 1943, abstracted in *Electronics*, December, 1943, p. 212.

Crystal-controlled Driven Multivibrator Chain for Time-base Calibration

The time-displacement linearity of cathode-ray oscilloscope sweeps can be measured at tenth-microsecond intervals by using this crystal-controlled driven multivibrator chain to provide a sweep triggering pulse and a constant-amplitude continuous sine-wave calibrating signal which is synchronized with the trigger signal which starts the time base.

A 5-mc crystal-controlled oscillator supplies the calibrating signal. Because the time interval between cycles is 0.2 microsecond, calibrating intervals of 0.1 microsecond are readily available.

Following the crystal oscillator is a series of multivibrators used as frequency dividers. The first, operating at 500 kc, is synchronized directly from the crystal oscillator. It in turn synchronizes a 50-kc stage, which in turn locks in a 5-kc multivibrator. The output of this multivibrator synchronizes a fourth, whose frequency is variable in synchronized steps from 500 to 2,500 cycles.

The output of the last multivibrator is fed through a pulse-shaping amplifier, a variable-delay network, and finally a cathode-loaded output stage. The function of the frequency dividers and pulse-shaping stage is to produce a pulse that is synchronized with the calibration signal and suitable for use as a trigger pulse to trigger the sweep circuit in the oscilloscope.

As previously pointed out, the time interval between successive peaks of the same polarity is 0.2 microsecond. If the sweep speed is adjusted until exactly five peaks coincide with 1 inch of deflection, the time base can be considered to have an accurate calibration of 1 microsecond per inch of deflection. If the sweep speed is adjusted for 10 peaks per inch, the calibration is equivalent to 2 microseconds per inch.

The circuit is, with few exceptions, straightforward and requires little explanation. The final multivibrator is made variable in frequency so that the oscilloscope sweep circuit can be triggered at the same repetition rate while being calibrated as when being used for measurements. This multivibrator is also of the unbalanced variety, *i.e.*, the circuit constants of the two sections of the dual tube comprising the multivibrator are considerably different. As a result, one half cycle of the signal is much shorter in duration than the other half. This permits obtaining a pulse of comparatively short duration.

Because the shorter part of the cycle appears as a negative pulse on the plate of the left-hand triode, the output of this section is applied to a zero-bias amplifier that permits the negative half cycle to be amplified while tending to clip the positive half cycle. The amplitude of the negative peak is sufficient to drive the amplifier grid to cutoff, thus squaring the peak.

The combination of the 25,000-ohm rheostat and 15-$\mu\mu f$ capacitor produces a phase shift that is capable of making the signal applied to the grid of the cathode-loaded stage lag the signal at the plate of the preceding tube by almost 1 microsecond.

The output signal is a positive pulse having an amplitude of approximately 20 volts peak and a duration at 80 per cent of peak of about 12 microseconds. The output of the crystal oscillator is approximately 70 volts peak to peak.

To ensure utmost accuracy of calibration and measurement, certain precautions have to be observed. First, before the time base is calibrated, the sweep should be positioned by means of the position control so that the start of the sweep is at some definite reference point. Once this adjustment is made and the calibration performed for this setting, all measurements should be made with the sweep starting at the same reference point.

Second, when calibrating the time base, the calibration should be made for a certain definite portion of the sweep (usually the one inch nearest the center of the oscilloscope). All future measurements should then be made on the same portion of the sweep. These two precautions eliminate possible error due to nonlinearity of the sweep or nonlinearity of the c-r tube deflection.

Also, it is advantageous to use the peaks of the calibration signal that are nearest the vertical portion of the c-r tube face used in making measurements. Thus if

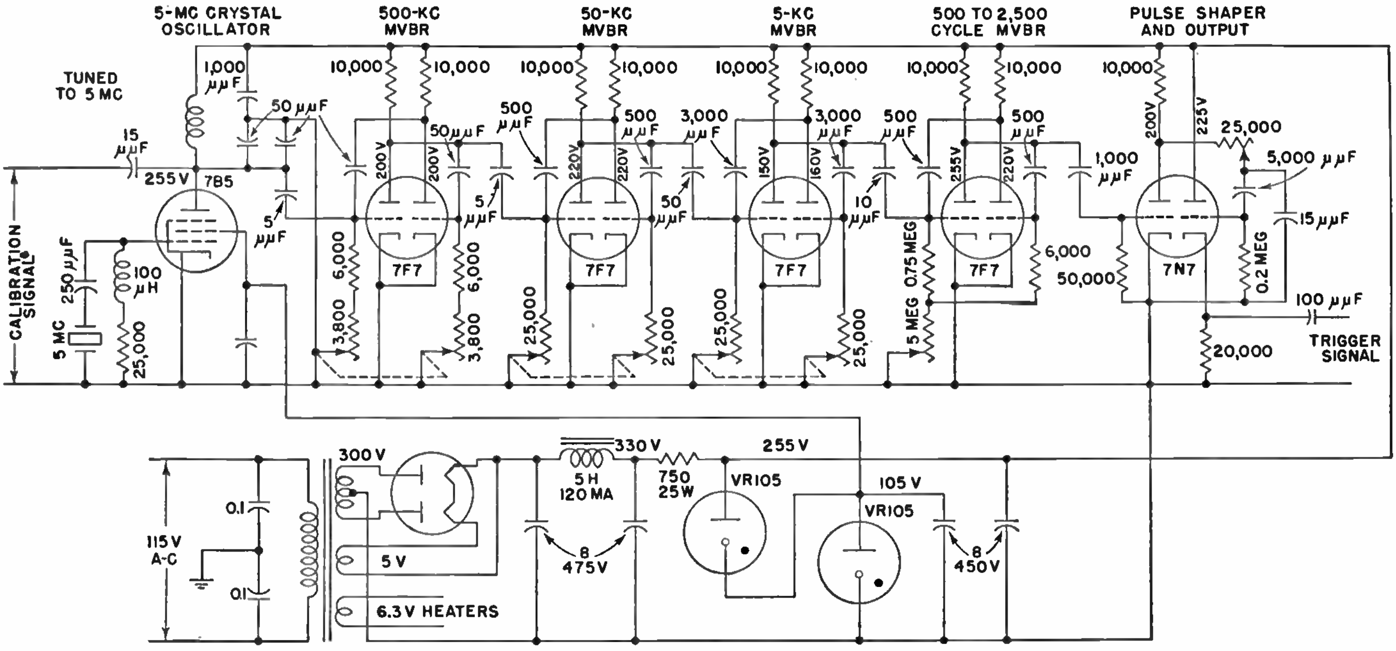

negative pulses are to be measured on the oscilloscope, the negative peaks of the calibrating signal would be nearest to the portion of the tube face on which the measurement is to be made. If measurements are made at the vertical center of the screen, it may be an advantage to use the zero crossover portion of the sine wave.

The equipment described has certain desirable features not found in calibrators using such methods as triggered shock-excited oscillators. First of all, because the calibration signal is crystal-controlled and operates continuously, the calibration signal covers the entire duration of the sweep and has a constant amplitude over the whole sweep.

The use of a 5-mc calibrating signal enables the calibration of the sweep to be done with high accuracy at points of 1 microsecond and ½ microsecond per inch of sweep. The unit can also be easily adapted to the calibration of slower speed sweeps by utilizing the output of the intermediate multivibrators for a calibrating signal. For example, the 500-kc multivibrator could be used for obtaining 2-microsecond time intervals, 20-microsecond points can be obtained from the 50-kc multivibrator, and 200-microsecond intervals from the 5-kc multivibrator.

To make use of the intermediate frequencies for calibrating purposes, it would be desirable to pass the output of the multivibrator through an amplifier that has a differentiating network in its grid circuit. This practice would provide sharp, spikelike pulses that would permit sharper calibration.

In setting up the unit and adjusting the multivibrators to synchronize on the proper frequencies, a single or multiple-loop Lissajous pattern can be produced on an oscilloscope by using the multivibrator output and a standard signal generator. The dual potentiometer in the grid circuit of the multivibrator is varied until the Lissajous pattern is synchronized and appears stationary. The final multivibrator can best be checked for frequency range by comparing its output to an a-f signal on the oscilloscope.

Walter W. Ludman, Time-base Calibration, *Electronics*, September, 1945, p. 117.

Multivibrator Type of Sine-wave Audio Oscillator

This simple multivibrator type of fixed-frequency audio oscillator employs a voltage-regulating transformer both as a regulating device and as a means of obtaining isolation from the line. Two type 117LM7 tubes are used, with filaments supplied directly from the power line. The two rectifier diode sections are paralleled for half-wave rectification, with two 510-ohm resistors and three 20-μf electrolytic capacitors providing adequate filtering.

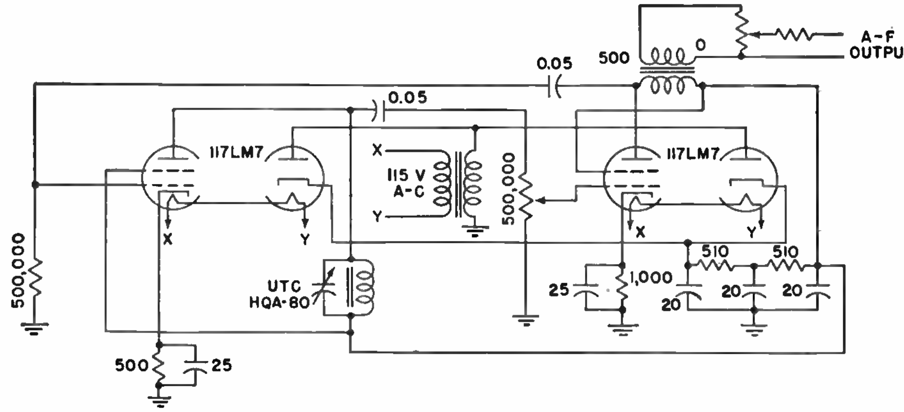

This oscillator is capable of delivering a power output of plus 15 db, with a hum component 40 db below zero level. With a Sola type 30498 regulating transformer it has operated satisfactorily over a line-voltage range of 92 to 130 volts.

Ernest A. Dahl, Train Position Indicator, *Electronics*, October, 1946, p. 122.

Stable Multivibrator for Comparing Broadcast Frequencies with WWV Signals

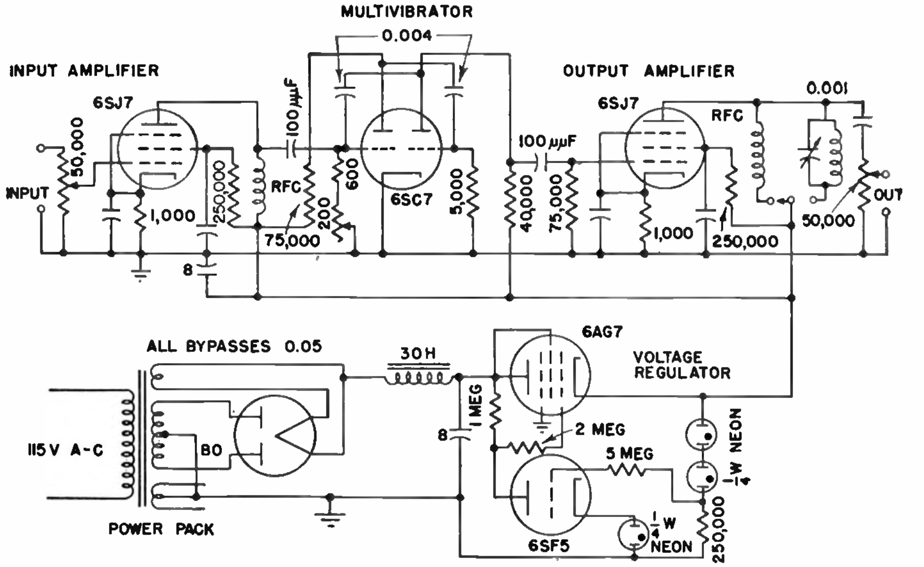

This circuit permits measuring or monitoring radio frequencies against the U.S. Bureau of Standards primary frequency emissions from WWV without the use of an intervening standard. The method is particularly applicable to frequencies which are integral multiples of 10 kc, such as standard broadcast-station frequencies, and it offers an unusually high degree of accuracy.

The signal to be checked is taken from the oscillator or buffer stage in the transmitter and is used to synchronize a multivibrator. One of the multivibrator harmonics is compared with one of the emissions of WWV by means of an ordinary radio receiver. The resulting beat frequency can be measured by any of several commonly used methods, such as an electronic frequency meter or a counting mechanism.

Consider a broadcast station with an assigned frequency of 1,230 kc and a multivibrator having a frequency of 10 kc and synchronized at a ratio N of 123/1. The 1,500th harmonic n of the multivibrator is then beat in the receiver against the standard frequency emission from WWV at 15 megacycles. Suppose the beat between the two latter signals is 18 cps. The deviation of the transmitter from its assigned frequency is then $18 \times N/n$, or 1.476 cycles. Raising or lowering the transmitter frequency a cycle or so and noting whether the beat frequency increases or decreases will tell the direction of the deviation.

The multivibrator frequency was chosen at 10 kc as this value contains harmonic components which fall on all standard emissions from WWV as well as those of broadcast stations. While for the majority of frequencies involved in the band, synchronization of the multivibrator could be accomplished in two or more steps with reasonably low synchronization ratios, there are 19 frequency channels that are prime multiples of 10 kc. In these latter cases, synchronizing the 10-kc multivibrator must be done in one step—involving synchronization ratios of from 59/1 to as high as 149/1. This calls for a high degree of inherent frequency stability in the multivibrator, achieved by using high-quality resistors of ample rating and an extremely stable voltage regulator.

To obtain sufficient output on high harmonics, it was necessary to tune the plate circuit of the output amplifier over the range from 5 to 15 mc. Below 5 mc, the circuit is untuned.

Synchronization of the unit at a particular ratio is achieved with various combinations of natural uncontrolled multivibrator frequency and synchronizing voltage amplitude. The combination resulting in the greatest stability is found by noting when the adjustment on the multivibrator frequency can be shifted the greatest amount without the loss of synchronism.

Larry S. Cole, Measuring and Monitoring Broadcast Frequencies, *Electronics*, July, 1946, p. 110.

Eccles-Jordan Circuit Used as Rectangular-wave Generator

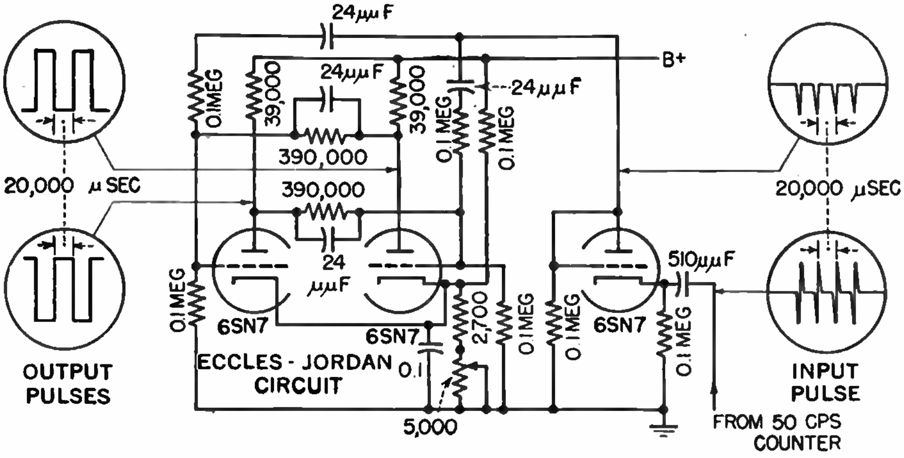

Though similar to a conventional multivibrator, this Eccles-Jordan circuit has the grids and plates of the two triode sections interconnected by conductive coupling. It serves to divide input pulses by a factor of 2 and at the same time provides rectangular output waves suitable for controlling sweeps and pedestals in a loran receiver indicator or other electronic equipment.

The circuit does not relax in the usual fashion of a multivibrator, but has two conditions of stable equilibrium until the synchronizing pulse is received, causing the two triodes to exchange polarities suddenly. The circuit remains in this condition until another pulse causes a reversal to the original condition. The sync pulses, as they arrive from the last counter, display negative as well as positive polarity. These pulses are passed through a 6SN7 connected as a diode, which removes the negative pulses and passes the positive pulses to the Eccles-Jordan circuit to initiate the action.

Loran Receiver-indicator, *Electronics*, December, 1945, p. 110.

Free-running Multivibrator with Electron-coupled Output

In this triode-pentode arrangement, the cathode and first two grids of the pentode operate in the same manner as the second triode in a conventional multivibrator circuit, the screen grid taking the place of the plate. The output wave form of this circuit has a large amplitude and is almost square. Due to the characteristics of pentodes, the plate voltage has little effect on the operation of the multivibrator portion of the circuit, and the frequency of oscillation may be estimated in the same way as for conventional multivibrators.

Norman W. Mather, Multivibrator Circuits, *Electronics*, October, 1946, p. 136.

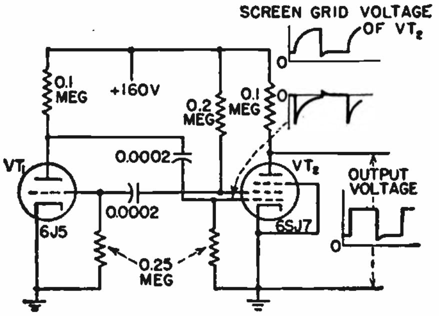

Biased Multivibrator Circuit for Timing Applications

An impulse received by tube T_8 in this circuit stops conduction in T_9 for a time dependent on the time constant of $R_{17} - C_8$, during which a positive bias is available at terminal J for any desired purpose, such as determining the number of current pulses in a welder control circuit.

In the stand-by condition, the control grid of T_8 (a pentode connected as a triode) is 55 volts negative with respect to its cathode, resulting in plate-current cutoff and placing point a at its full voltage of 430 volts. At this same time the control grid of tube T_9 is a few volts positive with respect to its cathode and is drawing grid current to produce a voltage drop across R_{17} of about 410 volts. The screen grid of T_9 is about plus 55 volts with respect to its cathode, and the plate is about 12 volts more positive than the cathode. The resulting plate current of about 8 ma through R_{16} makes point J approximately plus 135 volts.

A positive impulse coming in at P makes T_8 conduct, dropping the potential of point a by an amount equal to the plate-current drop in R_{13}. This takes place quickly, so that point b momentarily drops in potential the same amount, driving the control grid of T_9 to cutoff. The positive pulse at P also boosts the potential of point c, but the flow of electrons from the cathode of T_8 to the grid holds c practically constant while capacitor C_9 is charging. The potential of d follows the instantaneous jump of c and then gradually rises at a rate determined mainly by the product $R_{14}C_9$. This time constant, about 0.2 second for the values shown, should be not less than half the maximum time T_9 is required to be nonconducting. For timing periods of 10 half cycles or less, R_{12} may be as low as 60,000 ohms, but for longer periods a value of 560,000 ohms is needed.

At the end of the timing period, conduction starts suddenly in T_9, with the result that the grid of T_8 is driven negative and stand-by conditions are restored. Before T_8 can respond again to a starting impulse at P, the grid potential of T_9 must return very near to zero. The time required for this depends on the product $R_{12}C_9$ and on the length of time of the previous operation of the circuit. Also, with R_{12} at 560,000 ohms not more than 3 seconds must be allowed between successive utilizations of this timing circuit. Sometimes these restrictions are advantageous and sometimes not, in which case circuit changes can be introduced to overcome the difficulty.

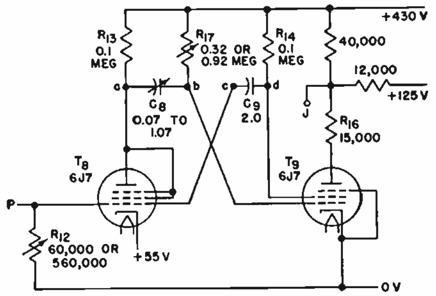

Wayne B. Nottingham, An Electronic Circuit to Control Intensity and Timing of Power for Spot Welding, *Rev. Sci. Instruments*, June, 1943, p. 161.

Basic One-shot Multivibrator Circuit

Direct coupling from the second triode to the first distinguishes this special one-shot multivibrator, also known as a one-kick trigger circuit. Feedback and the plate-supply voltage are adjusted so that VT_1 is cut off when VT_2 is conducting. This stable condition can be interrupted by a positive trigger signal on the grid of VT_1. After a short period t the circuit automatically returns to the stable condition. Somewhat more accurate timing can be obtained by making the grid return of VT_2 to +120 volts instead of to the cathode. The period t is approximately half the period of a symmetrical multivibrator having circuit elements corresponding to those used with VT_2 in this one-shot multivibrator circuit.

Norman W. Mather, Multivibrator Circuits, *Electronics*, October, 1946, p. 136.

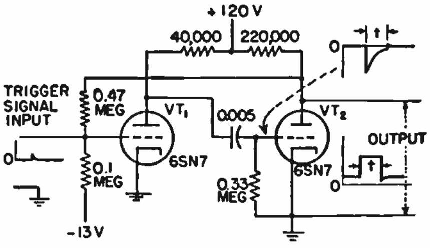

Biased Multivibrator for High-voltage Pulse-generating Circuit

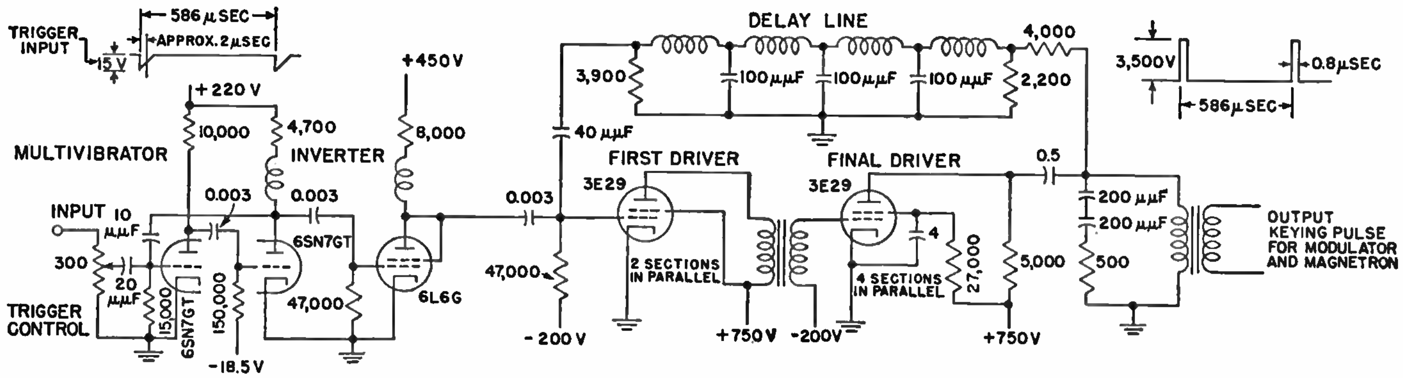

THIS circuit illustrates the use of a one-shot, or biased multivibrator, circuit for generating a negative rectangular pulse with 2-microsecond duration in response to short, sharp 15-volt trigger input pulses. The rectangular pulse is then fed to a 6L6G inverter stage that reverses the polarity and applies the pulse, in positive polarity, to the first driver stage (type 3E29).

The first driver is coupled by a pulse transformer (capable of passing short pulses) that reverses the polarity, feeding positive pulses to the second driver stage. The negative pulse appearing in the output of the second driver stage (two type 3E29) is fed back to the grid of the first driver through a low-pass filter network that serves as an artificial transmission line. The constants of this line are so chosen that the pulse requires exactly 0.8 microsecond to pass through the line. Consequently, 0.8 microsecond after the pulse is applied in positive polarity to the first driver, a large negative pulse is fed back to it, thus cutting off the first driver and forming the trailing edge of the pulse. The resulting pulse appears across the output pulse transformer, with an amplitude of 3,500 volts, positive against ground.

The SCR-584 Radar, Part I, *Electronics*, November, 1945, p. 104.

Multivibrator and Frequency-splitting Trigger Circuits

THIS unique application of multivibrator circuits was developed to simulate in a bombing trainer the motor noise present in an actual airplane. A conventional twin-triode symmetrical multivibrator produces the fundamental exhaust note, the frequency of which can be varied over a range of from 20 to 300 cycles with the dual 0.1-megohm potentiometer.

Each triode plate is coupled to the grid of the opposite triode plate through a 0.1-μf capacitor. So connected, the twin-triodes act like a seesaw, with first one tube conducting and then the other. To follow through the operation very briefly, assume that the triode section on the left starts to conduct. As it starts to conduct, its plate voltage will drop nearly to cathode potential. This sudden shift downward in potential is transmitted to the right-hand grid through the 0.1-μf coupling capacitor, making the right-hand triode nonconductive. The right-hand grid will immediately start to rise back to cathode potential as the charge leaks off the coupling capacitor through the variable grid resistor. When a potential of 10 volts negative to cathode is reached, the right-hand triode will start to conduct and in a similar manner bias off the left-hand triode. When this newly created bias on the left-hand triode leaks off, it will again conduct and bias off the right-hand section.

The rate at which this transfer, seesaw, or oscillation occurs is determined by the discharge rate of the coupling capacitors through the grid-return resistors. By making the latter variable, it is possible to vary the frequency over a very wide range.

For signal output, one plate resistor is tapped at the mid-point and coupled to the common amplifier feed through a 1-megohm decoupling resistor. A direct plate connection is used to furnish the signal for driving the first subharmonic generator.

The first subharmonic consists of a trigger circuit of the Eccles-Jordan type, but with the component values so chosen that it responds only to negative pulses and can thus be used as a frequency divider without additional tubes. It consists of the two triode elements of a a 6SN7 twin-triode tube, with the plate of each triode coupled to the grid of the opposite triode in such a manner that if either triode is conducting it will hold the grid of the other triode well below cutoff. Thus either triode may conduct, but only one can conduct at a time.

A negative impulse applied simultaneously to both grids through the 0.00045-μ-coupling capacitors will momentarily bias off the conducting triode and the other triode will become the conducting one. A second negative pulse will cause the first triode to conduct again, etc. Thus two negative pulses will produce one complete alternation, seesaw, or oscillation.

Within reasonable limits, a positive pulse will not effect this trigger. When the 0.0045-μf capacitors are coupled to the right-hand plate of the multivibrator, the trigger grids will receive one negative impulse for every cycle of the multivibrator and will make one complete alternation or cycle for every two cycles of the multivibrator. Thus whatever the multivibrator frequency, the first subharmonic generator will oscillate at half its frequency.

Likewise, the second subharmonic generator, coupled to the output of the first subharmonic generator, will oscillate at half the frequency of the first subharmonic generator or one-quarter the frequency of the multivibrator. The third subharmonic generator will oscillate at one-eighth the multivibrator frequency.

The output of each subharmonic generator is controlled by a 0.5-megohm

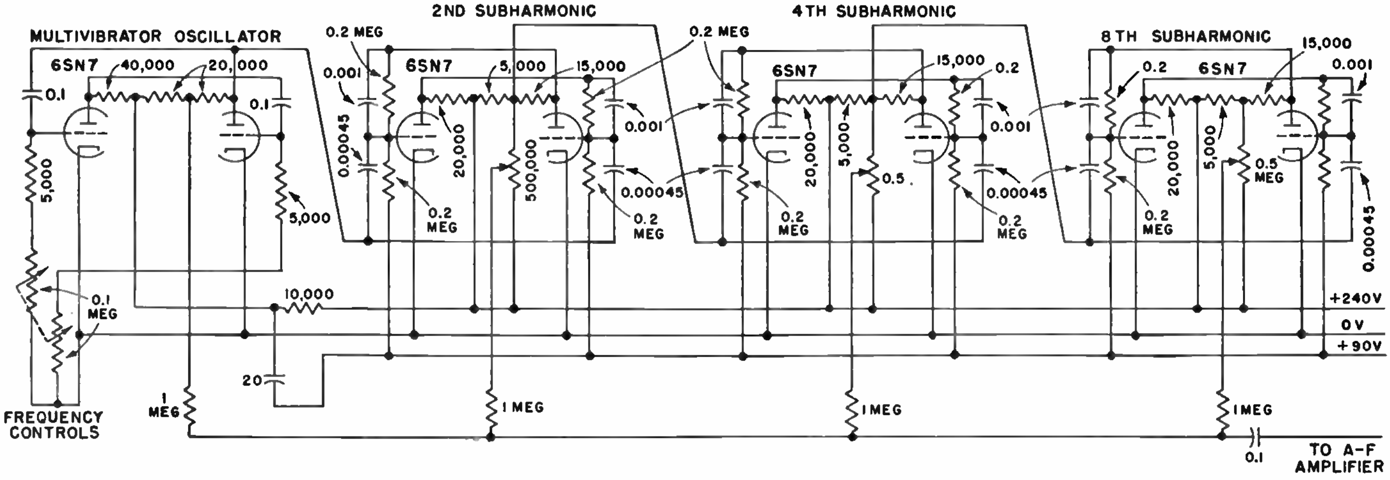

potentiometer and is coupled to the common amplifier input through a 1-megohm decoupling resistor.

Multivibrator oscillators as used in this device are very sensitive to voltage variations and tend to lock in with each other if any appreciable coupling exists. Any tendency to lock in would defeat the main purpose of the dual units, that is, to produce the characteristic low-frequency beat of multimotored planes with motors not in exact synchronism. Therefore the units were isolated physically and electrically as completely as possible. Separate power supplies were used for the same reason.

Byron E. Phelps, Motor Noise Unit for Aircraft Trainer, *Electronics*, August, 1945, p. 96.

Cathode-coupled One-shot Multivibrator Circuit

In this variation of the one-kick circuit, values of components are adjusted so that VT_1 is cut off when VT_2 is conducting. The trigger signal interrupts this stable condition, but after the period t the circuit automatically returns to the stable condition. If the grid return of VT_2 is made to cathode instead of to +180 volts, a somewhat longer period is obtained. This circuit has the advantage that the triggering circuit is isolated from the multivibrator circuit by VT_1.

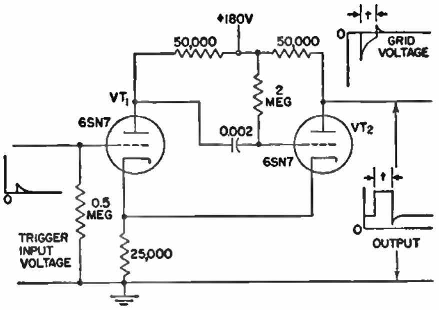

Norman W. Mather, Multivibrator Circuits, *Electronics*, October, 1946, p. 136.

Multivibrator Circuits Employing Cathode Coupling

Use of cathode coupling between the two triodes of a multivibrator in the manner illustrated by the upper circuit results in performance that is particularly adapted to synchronization. The output voltage can be used without disturbing the operation of the circuit. As a free-running multivibrator, however, this cathode-coupled arrangement tends to be erratic in frequency of operation.

The lower circuit, illustrating the use of cathode-coupled output, is useful because it has a low-impedance output and a steep wave front on the output signal. The addition of cathode resistor R_K affects the free-running frequency only slightly.

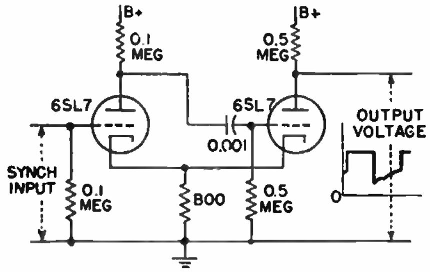

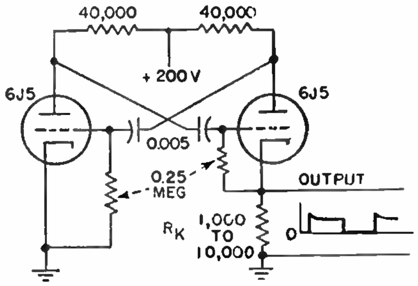

Norman W. Mather, Multivibrator Circuits, *Electronics*, October, 1946, p. 136.

Multivibrator Giving Wide Frequency Range with Constant Output Amplitude

The free-running frequency of this simple double-triode multivibrator may be varied over a range as great as 120 to 1 without appreciable change in output amplitude and without changing the symmetry of the generated oscillation. The frequency can be controlled by varying any one or all of the four resistors designated by *R*. Reducing the value of the plate-to-plate resistance increases the frequency. Cathode resistor values depend upon the triodes used and hence are not given.

A. A. Macdonald and J. L. Johnson, U.S. patent 2,356,071, *Electronic Industries*, January, 1945, p. 134.

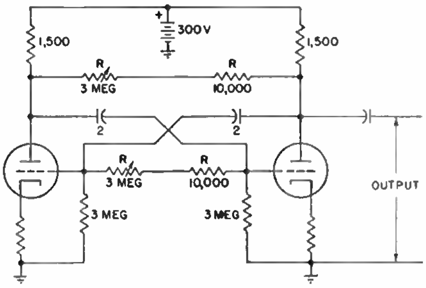

Pentode Multivibrator Acting as Pulse Equalizer and Pulse Sharpener

At high altitudes, the counting rates encountered by cosmic-ray radiosondes are so high that individual counts cannot be recorded directly but must be scaled down electrically until a slow enough rate is obtained for a mechanical recorder. The multivibrator circuit shown here is then necessary between the superheterodyne receiver output and the scale-of-64 scaling circuit at the ground station to equalize the amplitudes of the received pulses and sharpen the pulses. The pulses are of the order of 0.0001 second long at the input.

W. H. Pickering, Cosmic Ray Radiosonde, *Rev. Sci. Instruments*, June, 1943, abstracted in *Electronics*, December, 1943, p. 121.

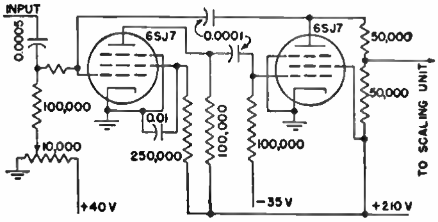

Controlled Multivibrator for Producing Flat-top Square Waves

Perfectly flat-top square waves can be obtained from this 30-cycle multivibrator circuit, which must be supplied with both positive and negative trigger pulses for one full cycle of operation. The stage is fed by a negative supply so that the plate returns may be grounded, and the output is taken from a tap on one of the plate load resistors, ensuring perfect fidelity and freedom from a-c coupling troubles that would be encountered in passing the low-speed square waves. The required input pulses can be obtained from a conventional 30-cycle 6SJ7 phase-shift type of timing oscillator followed by a 6J5 phase-control stage and a 6SN7GT clipper stage.

Clement Moritz, Transient Video Analyzer, *Electronics*, June, 1946, p. 130.

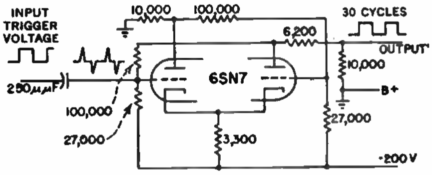

OSCILLATOR CIRCUITS

Frequency-modulated Relaxation Oscillator for Detection of Vacuum Leaks

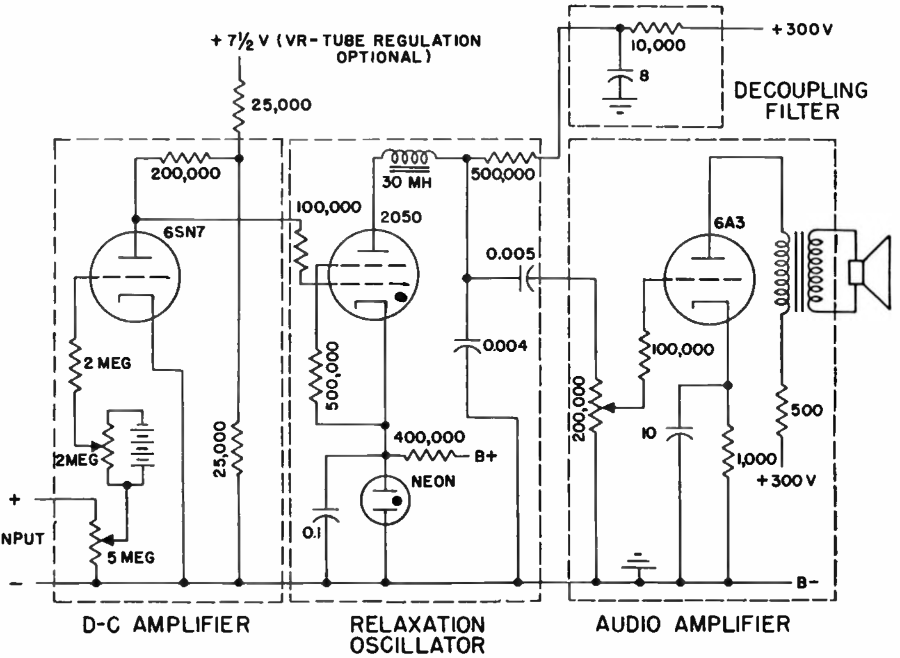

This circuit, which was originally used as an accessory to an ion gage used to detect leaks when gas is sprayed over the outside of a vacuum system, produces a variation in audible tone or ceases producing a tone when a leak is detected.

The circuit for producing a frequency-modulated tone with change of input voltage is illustrated. The 2050 thyratron constitutes a relaxation oscillator, the frequency of which may be changed by varying the control-grid voltage. The 6A3 is an audio amplifier, for converting the voltage variations into an audible loudspeaker sound.

The 6SN7 is a d-c amplifier for increasing the output frequency change with a given ion current change. In operation, the sensitivity control potentiometer is put in parallel with the input to the ion-gage electronic microammeter. This input voltage is amplified by the 6SN7, and is fed from the plate of that tube to the control grid of the 2050 thyratron. The net control-grid voltage is the difference between the variable 6SN7 plate voltage and the relatively constant neon-tube drop. As the 6SN7 plate voltage decreases, the oscillator frequency drops. A positive signal input to the grid of the 6SN7 will result in lowered oscillator frequency.

With the circuit constants given, satisfactory operation is obtained by setting the steady-state frequency control to produce a 30-cycle output. With this setting, an increase of ion-gage current corresponding to an increase in howler input voltage of $\frac{1}{40}$ volt stops howler oscillations. This input-voltage change of $\frac{1}{40}$ volt corresponded in one instance to a pressure change of less than 10^{-7}mm, or 10^{-4} micron on the most sensitive scale of the ion gage. A distinct change in howler pitch can be heard before a shift in ion-gage meter reading can be seen.

The circuit can produce greater sensitivity by using a higher gain tube in the d-c amplifier, possibly a 6J7. The increased frequency drift that might result would not be objectionable, since the drift would still be slow in comparison with the sudden change in pitch resulting from a leak being encountered. A stabilized B supply will reduce drift considerably.

Victor Wouk, Audio Aid for Vacuum-leak Hunting, *Electronics*, February, 1946, p. 138.

Very-high-frequency Hartley Oscillator Using Subminiature Type 6K4 Tube

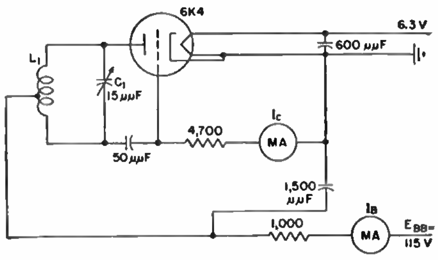

The subminiature 6K4 tube performs efficiently as an oscillator and has good output power at low plate voltages, of the order of 100 volts, without it being necessary to use excessively low grid resistances.

Because of the small size of the tube elements and the possibility of making short, direct connections to the circuit components, the 6K4 will oscillate in a lumped-constant circuit in the 2-meter amateur band as well as in the frequency-modulation and lower television bands.

By using the simple Hartley oscillator circuit shown, stable oscillations of nearly constant amplitude are obtained from 80 to 130 mc. The grounded-cathode Hartley circuit proves more efficient than the cathode-tap Hartley because, although the tank capacitor in it is hot on both sides, it does not require r-f chokes in the heater leads. If a superregenerative oscillator is required, a grid resistor considerably larger than the one shown here is used. The coil contains 5 turns of No. 16 wire on a $\frac{7}{16}$-inch diameter form $\frac{3}{4}$ inch long.

The tank tap and loading were adjusted for optimum output at 100 megacycles. The plate supply was adjusted to produce the maximum rated cathode current of 20 milliamperes. These adjustments were then fixed while the oscillator was tuned through its range.

Circuits for Sub-miniature Tube, *Electronics*, May, 1946, p. 154.

Relaxation Oscillator and VHF Oscillator in Modern Radiosonde

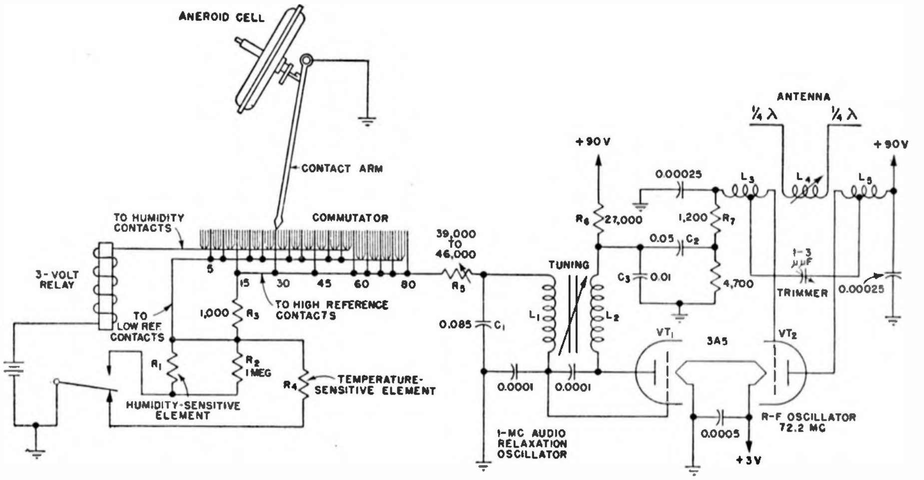

The complete circuit of the U.S. Weather Bureau radiosonde type 506 WB is shown. It contains a single type 3A5 miniature duotriode vacuum tube. Triode section VT_1 is employed as a 1-megacycle tuned-plate tuned-grid r-f oscillator having a variable relaxation frequency in the audio range, and triode section VT_2 serves as a 72-megacycle modulated r-f oscillator.

Advantage is taken of the mechanical movement of the aneroid pressure-measuring unit to perform the various circuit-switching functions in conjunction with the relay, in order that the temperature and humidity-sensitive resistors and reference resistors may be sequentially inserted into the grid circuit of VT_1 to give various relaxation (oscillator blocking or quenching) frequencies in the range from 10 to 200 cycles.

There is a period when the 72-mc r-f oscillator is operating and the audio relaxation oscillator is blocked, followed by a period during which the relaxation oscillator is functioning and the 72-mc oscillator is blocked. This transfer of the relaxation rate from the 1-mc oscillator to the 72-mc oscillator results in a transmitted carrier having a pulsed or keyed characteristic, the frequency of which is determined by the resistance of the meteorological elements or reference resistors.

During the period when the audio relaxation oscillator is blocked, the negative charge on C_1 leaks to ground through R_5 and R_3 and then either through humidity-sensitive resistor R_1 and shunt R_2, through temperature-sensitive resistor R_4, or through the contact arm of the barometric switch. As C_1 discharges and the grid voltage of VT_1 increases in a positive direction, a condition finally is obtained where VT_1 begins to conduct and oscillate at about 1 megacycle, causing a voltage drop across R_6 that is applied by means of C_2 to the grid of triode section VT_2, stopping it from oscillating. Capacitor C_2 thereupon discharges through R_7, causing the r-f oscillator section VT_2 to remain off. The current through R_7 does not become small enough to allow the transmitting oscillator to start oscillating again until the relaxation oscillator blocks itself by the accumulation of a negative charge on C_1. At this time C_2 and C_3 change toward +90 volts, reducing the current through R_7 and thus reestablishing conditions for oscillation of transmitting oscillator VT_2. This brings the cycle back to its starting point.

V. D. Hauck, J. R. Cosby, and A. B. Dember, Radiosonde Telemetering Systems, *Electronics*, May, 1946, p. 120.

Thyratron-type Relaxation Oscillator with Plate-supply Keying

This thyratron-type oscillator provides 0.3 to 30,000-cps pulses; it has widespread use in many fields of biological research, clinical medicine, and surgery where a voltage of variable amplitude and frequency is used to stimulate nerve tissue or affect organs.

The thyratron-type relaxation oscillator using a high negative grid bias to key oscillations is quite popular, but since the capacitor charges up to the full plate-supply voltage when the grid is held negative, the initial pulse is extremely high in respect to those that follow. Keying the plate-supply voltage eliminates this fault in the stimulator circuit shown.

A type 885 argon-filled thyratron is used as a relaxation oscillator. Capacitor C_5 charges through resistors R_3 and R_4 until the voltage across it is equal to the firing potential of the thyratron. At this point the tube breaks down, and the capacitor discharges through it and through the primary winding of T_2. The secondary voltage of T_2 is not the usual saw-tooth wave shape associated with thyratron relaxation oscillators, but rather it is a pulsed wave made up of damped oscillations which are of such high frequency and which decay so rapidly that only a single pulse appears on a cathode-ray screen, even when the time axis is expanded.

The pulse repetition rate is controlled roughly by switching of capacitors for C_5, with R_4 providing vernier control as in the standard saw-tooth circuit. The range covered is from one pulse every 3 seconds to 30,000 pulses per second. The magnitude of the output voltage is controlled by R_5 (coarse) and R_6 (fine).

A cathode control changes the grid bias and, hence, the firing potential of the thyratron, which in turn changes both the magnitude and the frequency of the output pulse. Thus making the grid more negative increases the firing potential of the tube, increasing the magnitude of the output pulse and decreasing the frequency of oscillation.

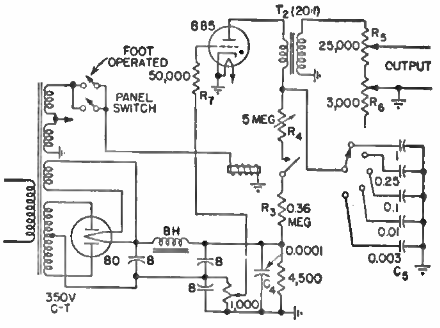

Conventional damped oscillations may be obtained by shunting the secondary of T_2 with a 1-μf capacitor. A saw-tooth voltage that can serve as a linear time base for an oscilloscope is available across C_5.

Walter Ira Weiss, Nerve Stimulator, *Electronics*, February, 1946, p. 155.

Push-pull 6K4 Oscillator Providing 1.5 Watts Output at 150 Megacycles

When using the subminiature 6K4 as an oscillator at high frequencies, a balanced circuit will provide a wider tuning range than a single-tube unbalanced circuit. For example, the push-pull circuit shown can be continuously tuned from approximately 90 to 150 megacycles with a constant strength of oscillation wider than that of the single-tube circuit. About 1.5 watts output can be relied upon over the entire range.

At a fixed frequency, at which the circuit can be adjusted for optimum operation, 1.75 watts can be obtained. Voltages fed back to the grids from taps on the tank inductor counteract those voltages fed back by interelectrode capacitances within the tube, thereby giving good high-frequency performance.

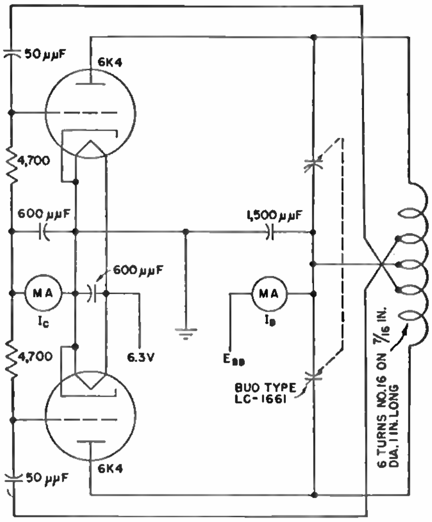

Circuits for Sub-miniature Tube, *Electronics*, May, 1946, p. 154.

Dynatron Oscillator for A-F and R-F Measuring and Comparing Applications

A dynatron oscillator circuit, arranged for convenience in doing experimental work, is shown. Useful accessories are a calibrated wavemeter, preferably a nonabsorption type, a variety of coils, and a capacitor calibrated over the desired frequency ranges, and a large slide-type dial. The 24A tube should be mounted horizontally so that the lead between the plate and external connection is short. The basis for dynatron measurement applications are the dynamic resistance of a tuned circuit and the resonant frequency or change in frequency.

The dynamic resistance is determined by the most negative control-grid voltage that will still maintain oscillation. This voltage may be controlled by a wire-wound potentiometer, the scale of which may be calibrated to read the negative resistance, or a voltmeter may be used to measure the bias voltage and a chart made to read the negative resistance. The value of negative resistance may be computed from the E_pI_p curve at various bias voltages or, if approximations are sufficient, standard coils whose dynamic resistance is known may be used. The negative resistance is equal to the dynamic resistance of the circuit when the bias control is set just at the point of oscillation.

The frequency, or change of frequency, is determined by the loosely coupled wavemeter or a near-by receiver. The wavemeter is also necessary to determine the point at which oscillations begin.

A parallel-resonant circuit may be tested directly by connecting it to the terminals shown. The dynamic resistance will be indicated by the potentiometer setting at which oscillation begins, and the frequency of the circuit will be shown by the wavemeter.

Perhaps the more useful is the substitution test. In this case, a tuned circuit of known values is caused to oscillate. The component to be tested is then clipped across this circuit. Oscillation will probably cease, but it may be reestablished by decreasing the control-grid bias. This decrease in bias will correspond to the effective resistance of the component under test. If the component contains reactance, the frequency will be altered. The tuning capacitor may be adjusted to restore the original frequency. This adjustment may be calibrated to read capacitance in one direction and inductance in the other. This will not indicate true inductance or capacitance but the effective value at that frequency.

Additional uses to which a dynatron may be put include application as an a-f, r-f, or modulated r-f oscillator. The r-f and a-f tuned circuits are merely connected in series as shown.

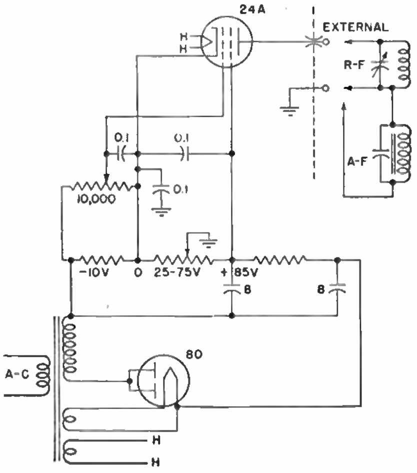

The instrument may also be used for matching coils using a fixed standard capacitor and for comparing properties of insulating materials.

With the circuit shown, the plate voltage may be between 25 and 75 volts. Maximum efficiency is obtained by increasing the negative grid bias until oscillation just ceases, and then oscillation is reestablished by varying the plate voltage. This operation should be repeated until an optimum condition is found.

Wayne M. Ross, Measurement Applications of the Dynatron, *Electronics*, December, 1945, p. 320.

Generator Circuit for Low-power Induction Heating and Soldering

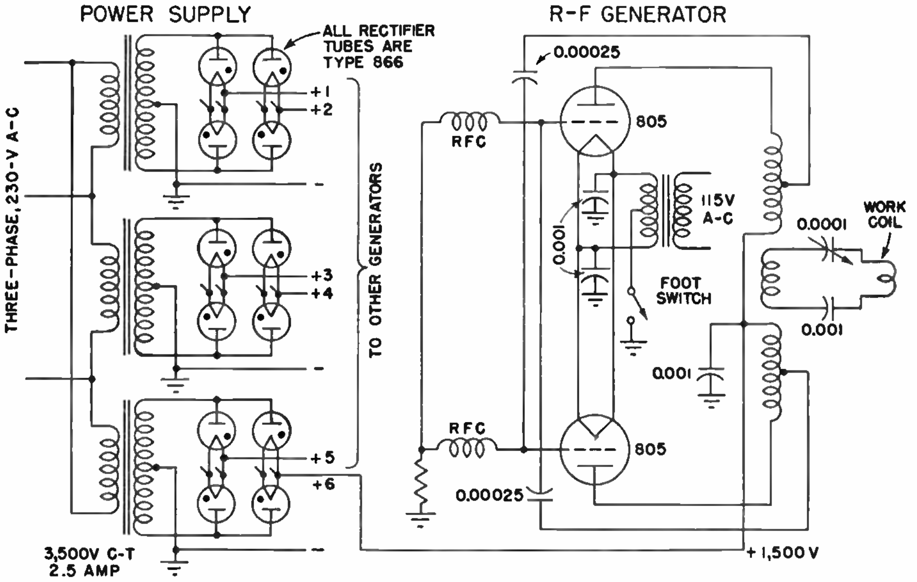

This two-tube r-f generator circuit operating from a 1,500-volt d-c power source is useful for workbench use in r-f soldering of metal-to-glass seals and in soldering feed-through terminals to cases of hermetically sealed components.

The generator is a simple push-pull oscillator using type 805 tubes operated somewhat below their maximum rating to ensure stability. In most applications the generator is tuned to about 30 mc. The output circuits are designed to resonate the work coil and to keep the r-f voltage on the coil at a minimum.

Circuit design is such that a number of low-power r-f generators can be plugged into high-voltage d-c outlets scattered throughout a plant and fed from the master d-c power supply shown at the left on the diagram. This uses 12 type 866 mercury-vapor rectifier tubes to supply 1,500 volts direct current over six separate lines to as many as 10 generators. No filtering is required. Generators with light loads may be paralleled on one line.

By shunting work coils with high-voltage mica capacitors that bring them all to the same resonant frequency when the load is in place, all fixtures can be interchanged without disturbing the generator or affecting tuning.

R. A. Ammon, R-F Soldering of Metal-to-glass Seals, *Electronics*, March, 1946, p. 120.

Transitron Oscillator Using RC Constants to Give Saw-tooth R-F Output

The transitron has the advantages of the dynatron without the attendant disadvantages. Stability of the circuit is excellent because only the *RC* values determine frequency, the electrode voltages consequently having practically no effect whatever. Such a circuit is comparable to the crystal oscillator in stability, since E_b variations of 25 per cent only change the frequency a few parts in a million.

The oscillator can be used throughout the audio range and also considerably above it, using *RC* circuits alone. The upper practical limit with *RC* constants is approximately 0.5 mc. Transitron circuits employing inductance can be operated with reliability to 20 mc and even to 60 mc if careful design is observed. Operation above 20 mc is somewhat difficult as regards efficiency and reliability.

In the transitron circuit shown, the suppressor goes negative with respect to the cathode due to applied voltages. Electrons are attracted by the positive screen and are repelled by the negative suppressor. A negative voltage change on the screen grid is transmitted from this grid to the suppressor through C_1, causing the suppressor to repel more electrons and resulting in a net increase in screen current. Such an increase with a negative increment in voltage is effectively negative resistance between the screen and suppressor grids.

The circuit operates in the range of 7 to 26 kc and delivers a saw-tooth waveform output. This wave form may be kept isosceles in shape over the range by making the cathode resistor variable. With the transitron, any feedback adjustment or other wave-form control will cause a frequency shift, and the frequency control will, through its range, cause a wave-form change. Thus a reference to wave form, or frequency control, refers only to the major effect of the control upon the circuit.

An alternative method for feedback control consists of making the screen resistance a voltage divider, the center arm of which is connected through a capacitor to the control grid. This system is useful in direct sine-wave production when using proper bias on control and suppressor grids.

The transitron circuit may be made to perform over a great frequency range, its upper practical limit using *RC* circuits being 0.5 mc and its lower practical limit being in the vicinity of a few cycles per second. In a given circuit design for operation over a wide frequency range, circuit control becomes complex when

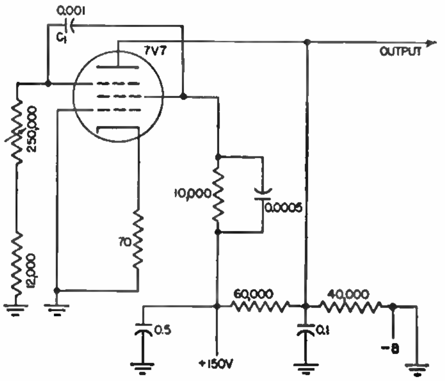

constancy in output voltage and wave form is desired. If these latter factors are unimportant, wide-range operation may be obtained with a single circuit control. It is possible, however, to retain constant wave form and output voltage with a single circuit control if it is designed to operate near a specific frequency or within a limited range.

The wave form in the screen circuit is square wave or its derivative type. The wave form in the plate circuit is saw-tooth due to the large capacitance. To produce an isosceles-shaped saw-tooth wave, the capacitance must be large enough to employ only the linear portion of its charge characteristic.

J. H. Newitt, RC Oscillator Performance, *Electronics*, March, 1944, p. 126.

Tuning-fork Oscillator Using Multivibrator with Feedback

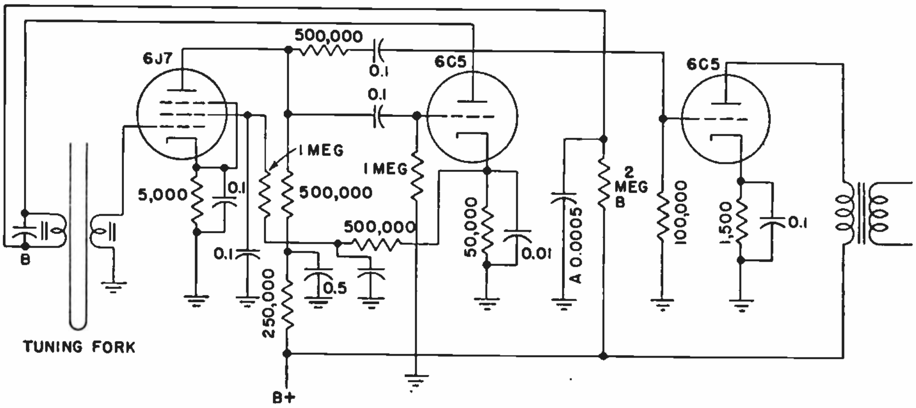

If an ordinary amplifier circuit is used to drive a tuning fork, any slight change in the amplification constants of the circuits or any increase in the pickup voltage will cause a reactive build-up of the amplitude of the oscillations of the circuits and of the mechanical amplitude of vibration of the tuning fork. This build-up will continue until the increased losses in the circuits and particularly the increased mechanical losses in the fork balance the cause for the change of amplification.

The circuit shown prevents this reactive build-up. The capacitance of *A* and the voltage to which it is charged are the only factors that have any appreciable influence on the driving power delivered to the drive coil *B*.

Capacitor *A* should be properly discharged during part of the time that the grid of the 6C5 swings in a positive direction. Resistor *B* should have a very large resistance value compared with the impedance of the 6C5 and the drive coil. The 6C5 should be biased to, or near, plate-current cutoff.

When the tuning fork is in vibration, a voltage is generated in the pickup coil. This voltage, amplified by the 6J7, swings the grid of the 6C5. When the grid of this tube is positive, *A* discharges through the tube and through the drive coil. Thus the fork receives a drive impulse. The power of the drive impulse is dependent only on the capacitance value and the voltage to which it is charged. As the grid voltage of the 6C5 falls back in a negative direction, the capacitor charges through resistor *B*. In this way a constant quantity of energy is delivered to the drive coil during each half cycle of vibration.

The action of the amplifier is such that the 6C5 acts as a trigger for the capacitor charge. It would operate as well if a gaseous discharge tube, such as the 884, were substituted for the 6C5.

This circuit is much less affected by varying line voltages than is an ordinary amplifier circuit, because the line voltage influences the driving power only in such a way that it increases the charging voltage of *A*.

A line-voltage change of 10 per cent caused a change of the frequency of the fork of about one part per million. By using a neon-lamp voltage regulator, the plate-voltage variations and the frequency changes are considerably decreased.

To determine whether temperature would influence the frequency of the generator, several fork units (including the amplifiers) were placed in a temperature-controlled chamber and the frequencies of the various units were measured at different temperatures from 15 to 55°C. The change of frequency for this entire temperature range was less than one part per million in most of the tests and never as high as two parts per million.

Ernst Norrman, Tuning-fork Stabilizer, *Electronics*, January, 1940, p. 15.

Twin-oscillator Circuit for Plotting Tracking-error Curves of Receiver Coils

This circuit for plotting tracking error is valuable when it becomes necessary, in the design of superheterodyne coils, to make the small inductance changes necessary for perfect tracking. The coils under test are used with their correct gang tuning capacitor and trimmers.

One section of the tuning gang tunes an oscillator at the signal frequency, and another section tunes the usual local oscillator. If these two are combined in the normal mixer circuit, we have a beat frequency in the plate circuit equal to the normal i-f value. By beating this i-f signal with a signal of the same frequency from a signal generator, in a tube such as a 6L7, it is possible to listen with headphones in the 6L7 plate circuit to the tracking error.

The antenna coil is wired in a Franklin oscillator circuit and the output of this signal-frequency oscillator is coupled to the signal grid of the 6K8. The i-f signal appearing at the plate is coupled to the injection grid of a 6L7 detector. The output of a signal generator, tuned to the i-f frequency, is fed into the other input grid of the 6L7, and headphones are connected in its plate circuit.

Although the signal in the 6K8 plate circuit contains beats equal to the sum and difference of the signal and oscillator frequencies, as well as traces of both their fundamentals and their harmonics, in practice the amplitude of the difference frequency (normally used as the intermediate frequency) is so large compared with the beats from other harmonics that the latter may be almost disregarded. A bypass capacitor in the 6K8 plate circuit removes some of the higher order harmonics.

A gain control in the 6K8 cathode circuit enables the operator to compensate for high signal oscillator output driving the 6K8 signal grid positive.

Constants required for loading the antenna winding are shown. The free primary in most cases shows selfresonance at some point within the tuning range of the secondary. If there is selfresonance and the coupling coefficient is of normal value, the coupled reactance of the primary may shift the resonant frequency of the secondary appreciably.

In the loading circuit for the primary of an r-f coil, the 10-$\mu\mu f$ capacitor has been included as being a reasonably close approximation to the output capacitance of most of the r-f pentode tubes in normal use.

In taking a tracking-error curve, the antenna and oscillator coils are checked first. The signal generator is tuned to the correct i-f frequency and is connected to feed the 6L7. As in normal alignment,

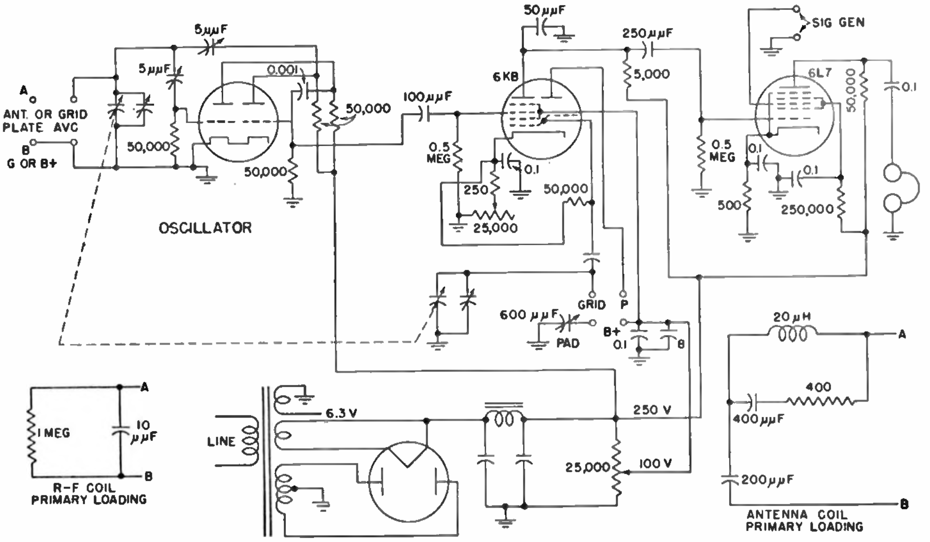

the trimmer capacitors are adjusted at 1,400 kc and the padder at 600 kc, and the 1,400-kc point is rechecked. The proper adjustment is indicated by zero beat in the headphones.

When the gang is tuned from the Full-in to Full-out position, if the oscillator inductance is correct there should be three points of zero beat, at 600, 1,000, and 1,400 kc. At other than these points the beat note in the phones will vary in pitch with the position of the tuning capacitor.

The deviation from perfect tracking at any point may be measured by leaving the gang set at that point and retuning the signal generator for zero beat. It is possible to determine exactly the deviation in kilocycles from perfect tracking and to tell if the oscillator signal is high or low in frequency. It is then a matter of minutes to plot a curve. With an intermediate frequency of 465 kc, a deviation of about 5 kc appears in order, particularly with a standard gang that would be almost certain to show some inaccuracy in itself.

The procedure in the case of an r-f coil is to remove the antenna coil, substitute the r-f coil, and leave all trimmers set as they are. When the r-f coil primary is loaded correctly, rotation of the gang should produce a similar curve, with little or no alteration of the antenna trimmer.

E. B. Menzies, Method of Plotting Tracking Error, *Electronics*, January, 1947, p. 128.

Tuning-fork Frequency Standard for A-F Measurements by Comparison

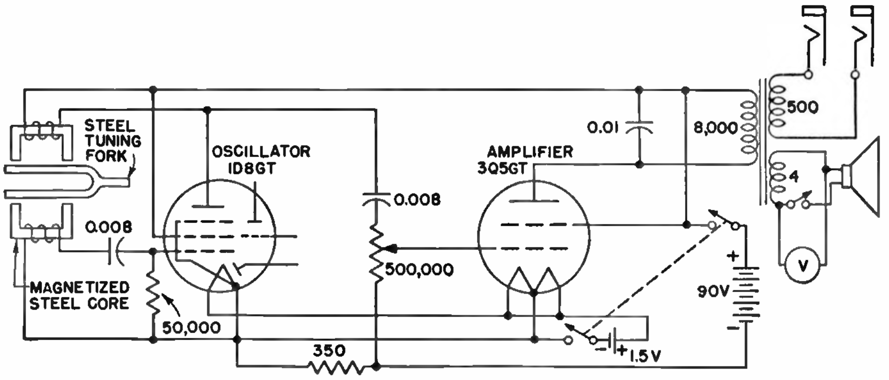

This unit is a self-contained battery-operated audio oscillator with one stage of audio amplification. The frequency of oscillation is controlled by a tuning fork that acts as a mechanical link through which energy is fed back from the oscillator anode to the grid. A 1,582-cycle tuning fork is employed, but forks of other frequencies can easily be accommodated.

The plate load of the 1D8GT tube consists of a coil wound on a U-shaped laminated core. The ends of the U core are placed in close proximity to one tine of the steel tuning fork. The other tine of the fork is similarly placed with respect to the ends of another U-shaped core made of hardened steel that has been magnetized. The coil wound around this magnetized-steel core furnishes the excitation potential for the oscillator grid.

When the switch is first turned on, a pulse of plate current flowing through the oscillator plate load coil magnetizes the associated plate-circuit core and produces a minute deflection of the tuning fork tine near it. This movement is mechanically transmitted through the tuning fork and causes a corresponding deflection of the other tine. The movement of the second tine changes the air gap of the grid-coil magnet and induces a voltage in the grid coil. By proper phasing of the grid coil, the conditions for self-sustained oscillation are fulfilled.

The coupling between plate and grid of the tube is through the mechanical movement of the tuning-fork tines and not through any direct magnetic coupling between plate and grid coils. Stopping the mechanical vibration of the fork causes the tube to cease oscillation.

To minimize the effects of changes in loading on the frequency of the oscillator, the output of the 1D8GT tube is fed into an audio amplifier, operating into an output transformer. The 4-ohm winding is used to energize a 2-inch permanent-magnet speaker for aural comparison of the frequency of the signal oscillator being tested with that of the standard. By listening for the beats when the two frequencies are close together, a difference of ½ cycle may easily be detected. A rectifier-type a-c voltmeter is also furnished to allow visual comparison of the test and standard frequencies.

The frequency being tested may be fed through a double patch cord to the 500-ohm winding of the output transformer. The voltage appearing across the 4-ohm winding of the output transformer will then be the vector sum of the voltages induced in the winding by the standard and test frequencies. If the two frequencies are not exactly alike, there will be a relative shift in phase relation of the two voltages. When the two voltages are in phase, the meter across the output winding will indicate the sum of the two voltages, while when the voltages have shifted to 180 degrees out of phase the meter will indicate the difference between the two voltages. By adjusting the two voltages to the same scalar magnitude, the meter fluctuations will become maximum, going from 0 to twice the voltage.

By the use of the visual method in comparing frequencies, a difference of one cycle in 30 seconds between standard and test frequencies may be detected.

William Fayer, Portable Audio-frequency Standard, *Electronics*, July, 1944, p. 100.

Stabilized Tuning-fork Oscillator Using Three Amplifier Stages

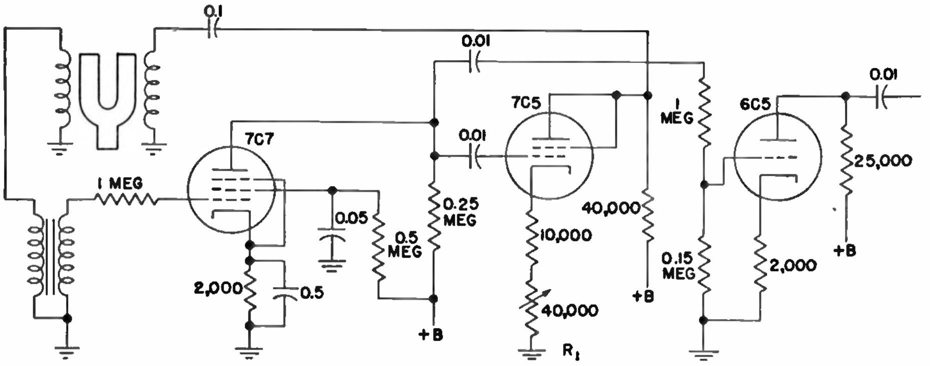

This tuning-fork oscillator circuit is that of a conventional multivibrator with a feedback network including the elements of the tuning-fork coils and capacitances. The frequency of the oscillator is determined by the vibrating tuning fork.

The multivibrator oscillates at the injected frequency and minute variations of a fraction of a cycle are possible with the adjustment of R_1. Greater drive will cause the fork to vibrate at a greater amplitude, thus slowing its speed. Stability for the amplitude of the drive is maintained by a regulated B supply. Either a VR105 tube or an electronic regulator may be used.

The fork is constructed of bimetallic materials to stabilize against temperature variations. Frequency stability of one part in 5 million is common. This system serves as an excellent arrangement for the frequency control in electric drive systems.

Daniel Schulman, Facsimile Synchronizing Methods, *Electronics*, March, 1946, p. 131.

Secondary Frequency Standard Having 10-kc Intervals

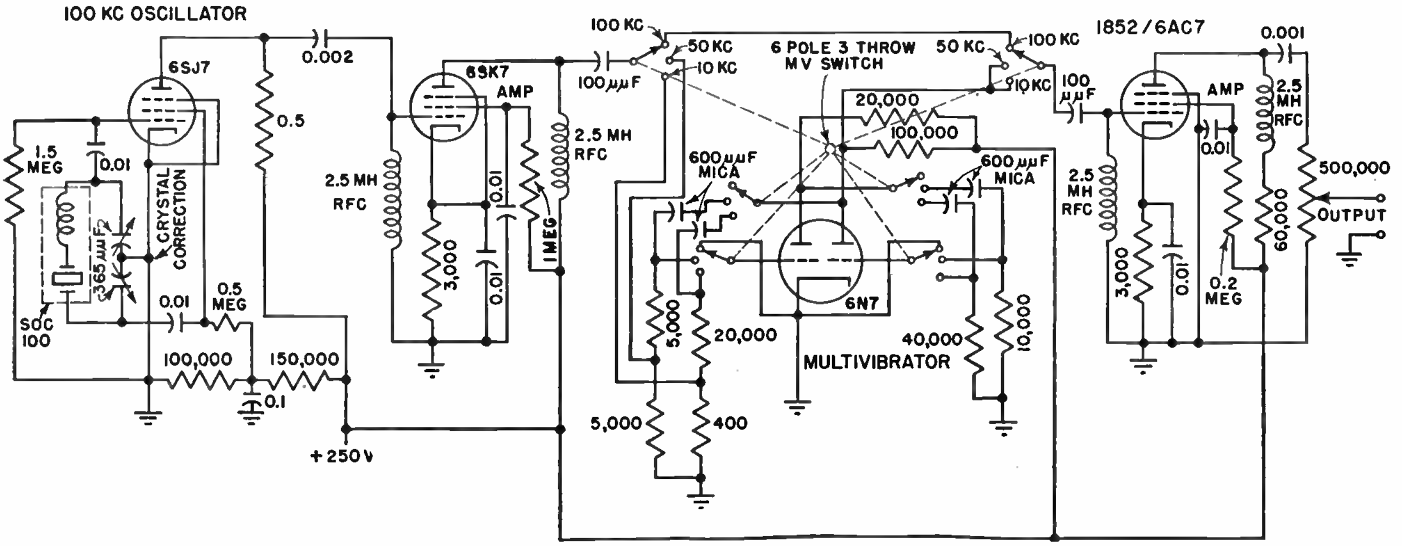

Frequencies from 100 kilocycles to 60 megacycles are provided by the circuit shown. Throughout this range, harmonics are provided at every 100,-50,- or 10-kc interval.

A 100-kc crystal oscillator is employed, and it is adjusted to exact frequency by means of the double 365-$\mu\mu f$ capacitor. A range of about 16 cycles can be covered. For 100-kc intervals, the oscillator is coupled to a 6SK7 amplifier that in turn feeds an 1852 final amplifier.

For 50-kc and 10-kc intervals a 6N7 multivibrator is switched into the circuit. The 1852 second amplifier is used in all cases and serves to isolate the multivibrator from the output circuit. The first amplifier serves to isolate the oscillator from the multivibrator. The output circuit is coupled to the receiver antenna post through a built-in attenuator to effect a balance between the harmonic used and the signal observed. Otherwise the output of the unit would swamp the signal observed and observation of the beat note would be difficult.

To check the 100-kc crystal bar, the operator should first find WWV or select any station, broadcast or commercial, whose frequency is known. Nearly all broadcast stations keep their frequency deviation within a few cycles per second and many keep to within a single cycle per second. In any case broadcast stations are required to keep within 20 cycles.

The station selected is tuned in on the receiver. Next turn on the secondary frequency standard and switch to the 10-kc multivibrator. This assumes the frequency of the station to be divisible by 10 kc. If the frequency is divisible by 50 or 100 kc, these multivibrators can be used as well. A beat note will be heard between the station observed and the multivibrator output. By adjustment of the output a balance can be secured. The correction dial is moved until the beats can be counted and brought to zero beat. If the receiver has an *S* meter, the beats can actually be seen. The actual number of swings a second is the precision to which the correction is set. From a practical standpoint, once the correction is made, good measurements can be made without the necessity of the correction.

D. Reginald Tibbetts, Direct Reading Interpolation Oscillator, *Electronics*, October, 1941, p. 35.

Wide-range Signal Generator with Automatic Amplitude Control

One method of obtaining control of the amplitude of an *LC* oscillator is to control the applied plate voltage to set the oscillator output to the desired amplitude.

In the circuit illustrated, the output of the oscillator *V*-1 is rectified by the diode, and the positive voltage resulting is fed to the grid of *V*-4. This tube is operated at low current, the variable cathode resistor *R* providing sufficient bias despite the positive voltage at the grid due to oscillator output. Variations in oscillator output are amplified by *V*-4 to control the bias on *V*-5 and hence the oscillator plate voltage.

The signal voltage at *V*-4 grid can be applied to a vtvm to read oscillator (and signal generator) output. Since the control depends upon change of amplitude, regardless of the level, it will be advisable to operate the oscillator at a relatively high level. In practice, 12 to 15 volts peak was found most satisfactory. With a fairly high-*Q* variable capacitor (such that amplitude does not fall below this value at the low-frequency end of a band) the output of the generator can be kept constant plus or minus 2 per cent from 50 kc to 50 mc.

The oscillator plate and *V*-4 screen supply should be regulated, although it is not entirely necessary. The control circuit is essentially degenerative so that the output will not vary much with change in the line voltage. The screen potential on *V*-4 will affect the gain of that stage, though the plate voltage need not be regulated. Tube *V*-4 and its associated bleeder draw about 5 ma, and this is the only additional plate-current drain introduced by this control circuit.

The output can be adjusted by *R*; in practice this should be set and locked, although a vernier control of comparatively low resistance may be placed in series with it and brought to a knob on the panel to make a correction for residual amplitude changes of 1 and 2 per cent if desired. With distortion, 100 per cent modulation of *V*-3 is possible, but 50 per cent modulation is very clean and requires about 15 volts peak of audio.

The line termination at the generator consists of the cathode impedance of the tube and the 500- and 150-ohm resistors in parallel. Twelve volts radio frequency to the grid of *V*-3 will result in 2.5 volts output with a termination of 73 ohms at the far end of the line.

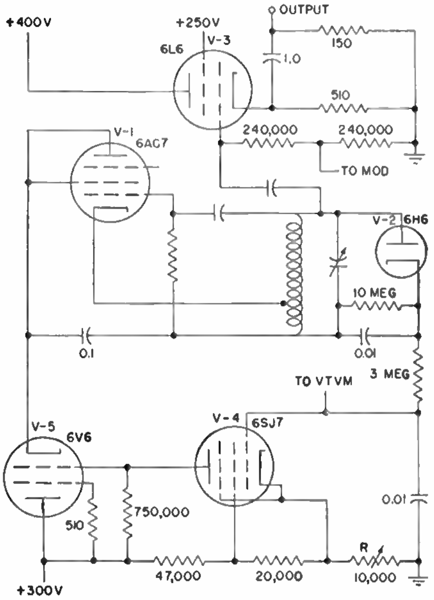

Howard T. Sterling, Wide-range Signal Generator with Automatic Amplitude Control, *Electronics*, May, 1945, p. 210.

Thermistor-regulated Audio-frequency Oscillator

This phase-shift oscillator, with four cathode-follower stages and a thermistor, maintains output level within 10 per cent over the entire range of 0.9 to 10,000 cycles. The same dial engraving serves for all four ranges, and accuracy of frequency setting is within 5 per cent.

The regulating action of the thermistor amplitude control keeps the distortion close to 1½ per cent at all frequencies where it can be measured. The regulating action is well damped, so that there are no amplitude variations in response to power-line surges or frequency-dial manipulations.

A W-E thermistor, type 1A, connected as the lower half of a voltage divider that includes resistor R_T in the feedback circuit, is employed to regulate the amplitude of oscillation. If the amplitude of oscillation increases, the current through the thermistor rises. As its temperature rises, its a-c resistance goes down, reducing the percentage of signal fed back.

The frequency-control dial rotates a three-gang potentiometer P_1, which with capacitors C_1 to C_6 forms the controlling network of the phase-shift oscillator. The scale shape was improved by using special inverse-square-law tapered three-gang potentiometers. Sets of capacitors are selected by a three-circuit four-position range switch to provide the four frequency ranges. To compensate for the effect of stray capacitance on the highest frequency range, part of one of the capacitive legs of the network (C_6) is made adjustable.

V_1 operates as a phase-shift oscillator, voltage being fed back from plate to grid through half of V_3 and the phase-shifting network in the grid circuit of V_1.

Cathode follower V_2, direct-coupled to the plate of V_1, is employed to drive the thermistor without loading down tube V_1. The thermistor is returned to the cathode of one section of the double-triode V_3. The series combination of R_T and the thermistor thus extends between the cathode of V_2 and the cathode of one section of V_3. These two cathodes are maintained at the same d-c potential by a path through 3-megohm resistor R_2, through which the grids of the two triodes are kept at the same potential. Signal voltage is kept from the grid of the ground-return section of triode V_3 by filter combination $R_2 - C_7$.

The a-c impedance to ground of the cathode of the section of V_3 being discussed is about 1,000 ohms, since the tube is essentially a cathode follower. This special ground-return arrangement is necessary because of practical considerations of leakage in the large capacitor, which would otherwise have been necessary. The leakage causes the operating point of the thermistor, and hence the signal level, to drift about.

The junction of R_T and the thermistor is connected to the grid of the second triode section of V_3, whose cathode acts as a low-impedance source for feeding the phase-shifting network. Thus tube characteristics have little effect on the frequency of oscillation.

All the above tubes receive their plate voltage from a pair of voltage-regulator tubes. This reduction of coupling in the common impedance of the power supply is very necessary to avoid degeneration at low frequencies.

The output stage uses a 6V6 tube (V_4) that is operated as a cathode follower, giving isolation and low output impedance. A step attenuator is provided in the output of V_4 for convenience in obtaining small output voltages.

Tubes V_2, V_3, and V_4, whose cathodes operate at high d-c potentials above ground, are heated from a separate filament winding whose center tap is connected to the cathode of V_2.

Capacitor C_8 is connected across R_T to compensate for phase shifts at high frequencies due to the plate-ground capacitance of pentode V_1. Such phase shifts make the oscillation amplitude drop and make the frequency too low at dial settings of P_1 above 3 kc on the highest frequency range. Capacitor C_8 has the opposite effect. It can be chosen to give proper amplitude and dial scale tracking up to 10 kc. If C_8 is too large, the frequency and amplitude will be too high for the dial setting.

Lawrence Fleming, Thermistor-regulated Low-frequency Oscillator, *Electronics*, October, 1946, p. 97.

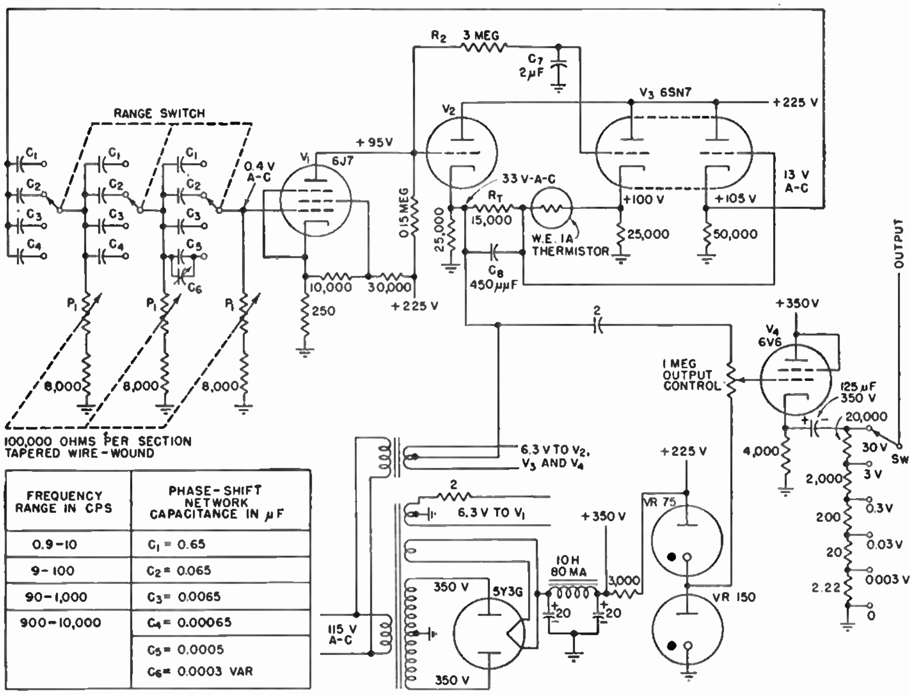

FREQUENCY RANGE IN CPS	PHASE-SHIFT NETWORK CAPACITANCE IN μF
0.9-10	C_1 = 0.65
9-100	C_2 = 0.065
90-1,000	C_3 = 0.0065
900-10,000	C_4 = 0.00065
	C_5 = 0.0005 C_6 = 0.0003 VAR

Relaxation Oscillator Provides Two Synchronized Voltages

This circuit generates simultaneously a sweep voltage for a cathode-ray oscilloscope and another synchronized voltage that is used to induce a reaction to be observed on the cathode-ray-tube screen. It has been used in bioelectric research in recording action potential-time curves from active muscle, such as the heart.

The two action potentials are amplified by two identical d-c amplifiers and impressed on two cathode-ray tubes mounted side by side. The arrangement can be extended for use with three channels and a three-trace cathode-ray tube for recording three events simultaneously.

The sweep-voltage generator is of the usual type, which employs a type 884 gas triode using a capacitor charge through a type 38 pentode for linear sweep and a variable resistor for logarithmic sweep. Coarse control of sweep speed is provided by a capacitor bank. Fine control of linear sweep speed is effected by bias change on the pentode through P_1. P_2 allows fine control of logarithmic sweep speed. S_1 allows changeover from one mode to the other.

The circuits involving tubes 884-1 and 884-2, with their attendant switching arrangements, allow single sweeps, multiple sweeps automatically controlled, and periodic sweep.

Tube 884-1 is biased to a continuously nonconducting state as long as 884-2 is nonconducting. Breakdown of 884-2 puts 884-1 into operating state for periodic sweep. With S_4 open and S_4P in the non-P position, 884-2 is nonconducting, and closure of S_3 sweeps the spot across the screen and keeps it there. Return of S_3 to Open position returns the spot to the initial starting point. This is the single-sweep operation. Periodic sweep is initiated by closing S_3 with S_4 open and S_4P in the P position. Opening S_3 stops periodic sweep. If multiple sweep is desired (periodic sweep that comes on and then automatically ceases after any predetermined period of time), S_4 is closed and S_4P thrown to the non-P position. Closure of S_3 now provides periodic sweep that terminates according to the time constant of the discharge circuit of P_3 and the 3-μf capacitor. Opening S_3 resets the device. By proper adjustment of the time constant, the sweep can be made to occur any predetermined number of times and then automatically stop.

Both sections of the 6C8G-1 are operated as unity amplifiers. The sweep voltage is coupled directly to the grids of both sections, which are biased to cutoff. The entire sweep voltage may be impressed without driving the grids positive. The amplifier, which is in reality a negative feedback amplifier using 100 per cent feedback, has an output which is in phase with the input and an amplification which is very nearly unity. The entire load is in the cathode circuit in this application.

The sweep-voltage output of one section is taken off by means of the two sweep amplitude controls P_{10} and P_{11}. Each provides independent control of the sweep-out-voltage amplitude of its corresponding amplifier. Two sweep-voltage amplifiers (there may be more if desired) are provided, one for each cathode-ray tube, using twin-triodes (6C8G-3 and 6C8G-4). Each is a d-c phase-inverting push-pull amplifier. Starting position of the spot is controlled by P_6 and P_7, which supply a variable bias to one grid of each amplifier. Therefore both starting position and amplitude of sweep may be independently controlled on each tube. This allows the sweep-voltage supply to each cathode-ray tube to be adjusted with the aid of a ruled transparent screen so that the spot passes the same relative positions on the two tubes at the same instant of time. The adjustment is independent of sweep speed or frequency and thus allows direct time comparisons between events in two action potentials recorded simultaneously.

The stimulator portion of the circuit involves the second section of 6C8G-1, 884-3, 6C8G-2, and T_1. The stimulating voltage delivered is a modified capacitor discharge voltage variable as to amplitude, duration, and time of occurrence during the sweep.

With no input from P_{12}, 884-3 is nonconducting. If P_{12} is adjusted so that some fraction of the sweep voltage is

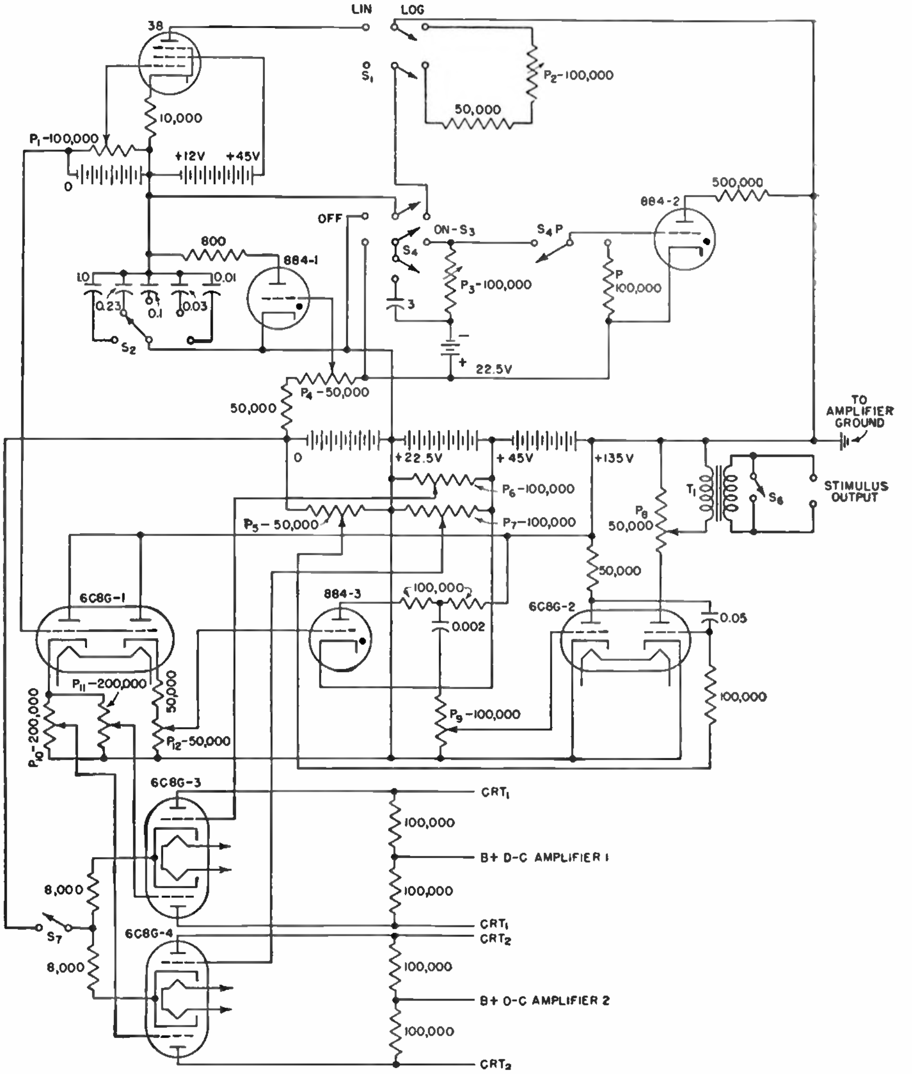

impressed on the grid of 884-3, this gas triode will break down at some instant during the sweep. A larger input will cause breakdown to occur sooner. The tube remains in the conducting state until return of the spot. Thus variation of P_{12} will cause breakdown to occur at any desired point in the sweep.

Both breakdown and return to the nonconducting state give rise to capacitor discharge voltages across P_9. The durations of these are determined by the time constant of the discharge, or coupling, circuit and are made some suitable value. The voltage due to the breakdown, modified in some detail, is used as the stimulating voltage; the other voltage, due to the return to nonconduction, is in the opposite direction and is suppressed.

The voltage pulse due to breakdown may be made to occur at any position of the spot during its sweep, and that position is independent of sweep speed. Partial suppression of the undesired pulse and phase inversion of both pulses is accomplished by feeding the voltage from P_9 into one section of 6C8G-2, which has zero bias on its grid. Partial suppression results for the undesired pulse, since it drives the grid positive; the desired pulse drives it negative. If desired, the peak of the desired pulse may be clipped by adjusting P_9 to drive the grid beyond cutoff on the peak.

The final modification is performed by the second section of 6C8G-2, which is operated at any desired point beyond cutoff by means of P_5. The undesired pulse is now negative and is completely suppressed, because it only serves to drive the tube still farther beyond cutoff. The only portion of the desired pulse that is amplified is that driving the grid positive from cutoff. This accomplishes the abolition of the exponential discharge beyond the desired point. Increase in the negative bias causes cutoff of the pulse at an earlier time and shortens the duration of the pulse. The output is fed through T_1, a matching transformer, and the amplitude is controlled by P_8. It is essential that T_1 be well shielded electrostatically between primary and secondary, so that the capacitive coupling between them is reduced to a minimum.

Harold Goldberg, Synchronized Voltages for Bioelectric Research, *Electronics*, August, 1941, p. 30.

Crystal-controlled R-F Generator for Diathermy or Industrial Heating

This is a prototype r-f heating unit that complies with FCC requirements by means of crystal control. The basic diathermy circuit described can be modified for lower power or industrial heating applications.

The crystal oscillator tube is a 6AG7 operated in a circuit in which the grid-screen section is used as a triode Pierce oscillator. The plate circuit of the 6AG7 is tuned to the second harmonic of the crystal frequency, where sufficient output is obtained to excite the following 6L6 doubler stage.

A frequency multiplication of two is obtained in the 6L6 stage, with sufficient output to drive the final amplifier.

The output stage operates as an amplifier at 27.32 mc, and is capable of delivering a power output in the neighborhood of 500 watts, which is more than is normally required for therapeutic purposes. Adjustment of the power output is made by means of a continuously variable autotransformer controlling the primary voltage delivered to the high-voltage power supply. Plate voltage for the 4-250A is supplied via a shunt-feed r-f choke, to allow d-c grounding of the plate tank circuit. Screen voltage for the 4-250A is taken from the plate supply via a dropping resistor, so that plate and screen voltages vary together when the supply voltage is varied.

Coupling between the amplifier plate tank circuit and the applicator leads is by means of a balanced T network connected to a single-turn loop placed near the tank coil. With the inductance values indicated, the matching network is capable of providing adequate loading for the amplifier for all normal applications, using applicator pads with 4-foot leads. The pickup loop is fixed in position approximately ½ inch from the grounded end of

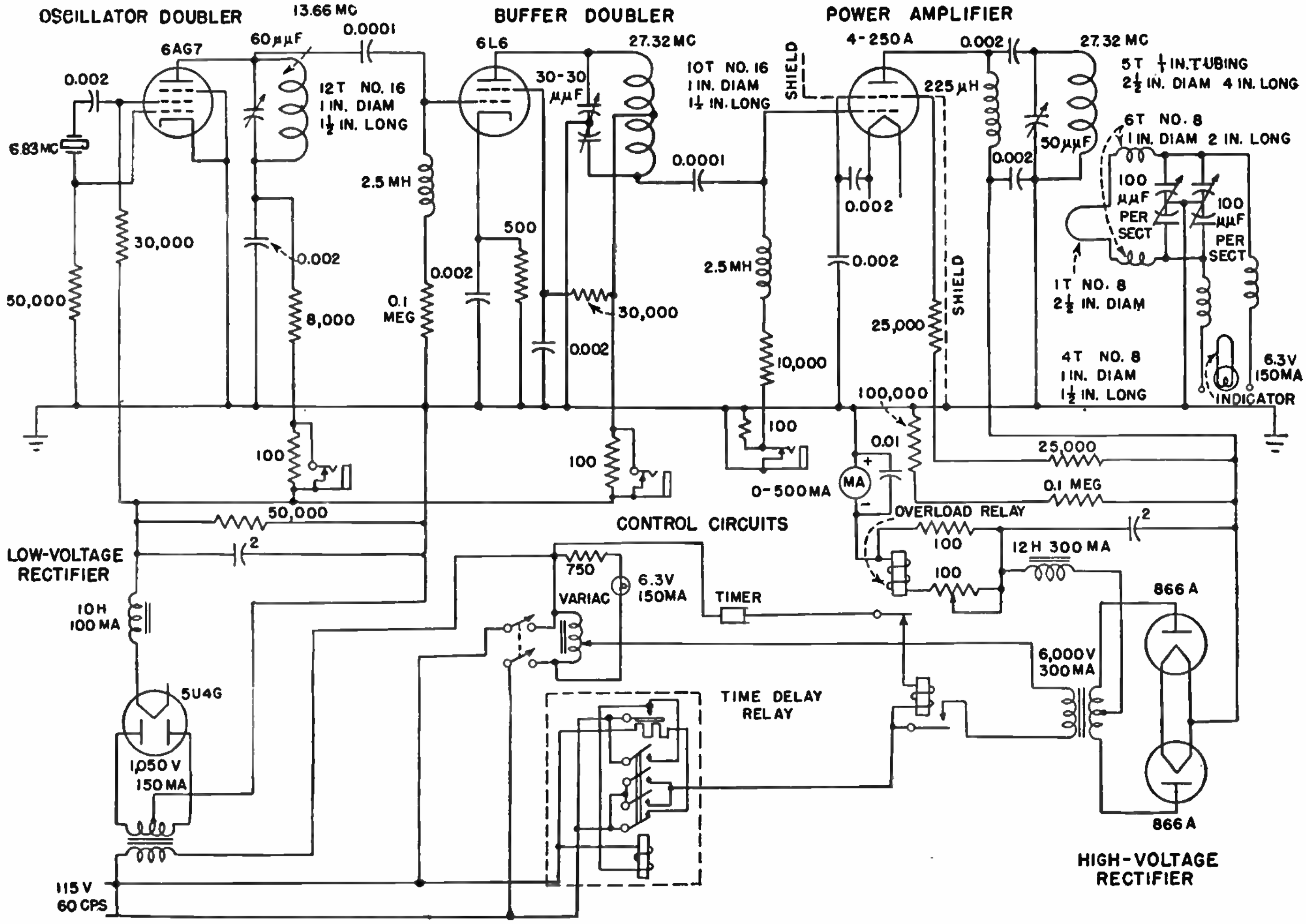

the plate coil. The variable capacitor in the coupling network is tuned for maximum current at the generator end of the applicator leads, as indicated by a single-turn loop and panel lamp loosely coupled to the output leads. The output indicator lamp is located on the panel between the output jacks.

Two parallel 100-µµf per section split-stator capacitors are provided in the matching network. However, one of these is used for padding purposes, and it need not be adjustable from the panel. It has been found unnecessary in practice to retune the final amplifier capacitor if the load-matching circuit is simply tuned for maximum output in each application.

All tuned circuits preceding the power amplifier plate are located under the chassis, to prevent coupling around the 4-250A. The 6L6 must have a metal envelope.

R. L. Norton, Crystal-controlled Diathermy, *Electronics*, October, 1946, p. 113.

Ten-kilowatt R-F Heating Generator Using Grid-controlled Rectifiers

For power outputs in the range from 5 to 100 kw, this thyratron rectifier arrangement offers a saving in space and cost over other methods of achieving smooth, continuously variable control of power output, and in addition has the advantage of being adaptable to automatic process control and rapid on-off cycling.

By making the bias sufficiently negative to prevent conduction and by then momentarily lowering the bias below the critical value, conduction may be started at any time during the positive half cycle of plate voltages. Once started, conduction continues until the a-c plate voltage goes to zero. Because of this, a short pulse, or even a sine wave, may be superimposed on the bias to initiate conduction. The phase of this pulse with respect to the plate voltage is shifted to start conduction at any point in the positive half cycle, giving full control of the average rectifier output voltage.

A small wound-rotor motor makes an ideal manual phase shifter. Resistance-reactance networks may also be used. Substitution of a vacuum tube for one of the resistance elements of such a network permits automatic control by phototubes, thermocouples, or similar heat indicators for process control. Keying the low-power grid-voltage supply allows rapid cycling of the full power output for automatic repetitive operations.

A three-phase full-wave grid-controlled rectifier in the circuit shown supplies 9,500 volts at 2 amperes for a 10-kw r-f generator. Three type 872A diodes are used in the negative position and three WL678 tubes serve as controlled thyratrons in the positive position. Since the cathodes of the three thyratrons are all at the same potential, a single bias rectifier may be used. This rectifier is assembled on a small chassis insulated from the grounded metal frame. Power to operate the bias rectifier is supplied through an insulating transformer. Insulation between the high d-c voltage and the a-c grid-voltage supply is also obtained through an insulating transformer. A small wound-rotor motor is used as a manual power control and gives a continuous adjustment of plate voltage from zero

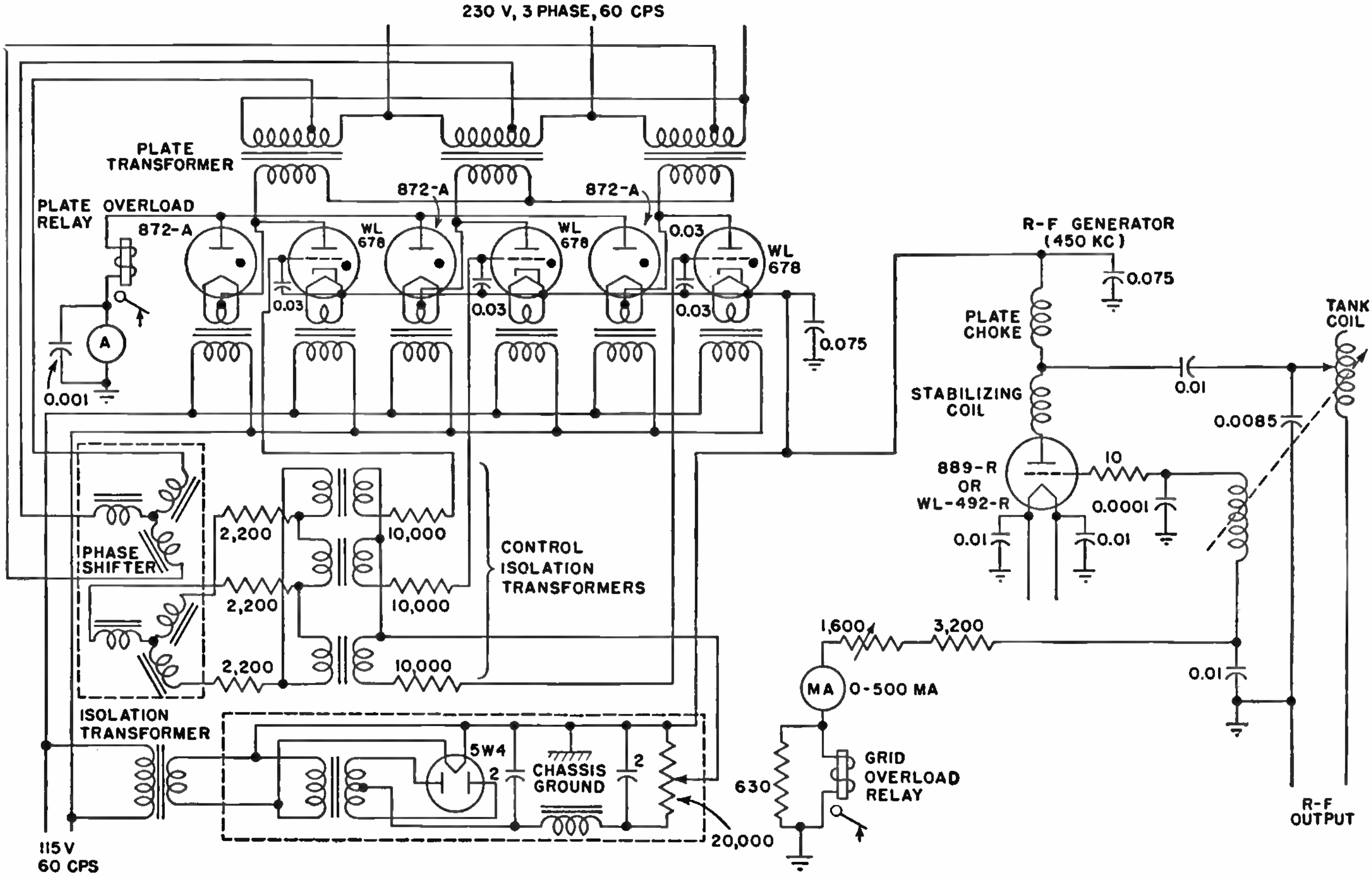

to maximum. A small relay may be connected between the phase shifter and the grid transformers for rapid on-off cycling. At this point in the circuit the relay contacts have to handle only 15 milliamperes at 115 volts.

Aside from the fact that thyratron tubes are more expensive than phanotrons of comparable rating and that a bias supply and grid-control voltage must be provided, the chief disadvantage is the wave form produced with phased-back operation. This wave form is difficult to filter and, if not filtered, it has a peak voltage output much higher than the average voltage.

When the wave-form effect can be tolerated, and it usually can be, a number of real advantages are available from the use of thyratron rectifiers for r-f heating oscillators.

Bruce Boyd, Grid-controlled Rectifiers for R-F Heating, *Electronics*, October, 1946, p. 125.

Versatile RC Oscillator with Output up to 180 Kilocycles

This circuit is an all-purpose *RC* oscillator and amplifier for medical and other research, providing a frequency range from 1.8 to 180,000 cycles with provisions for varying the wave form, for obtaining exponentially rising currents, and for obtaining surging direct currents. Although the instrument was developed for electromedical purposes, its application is by no means restricted to the medical field and useful industrial applications may be found.

The unit was designed primarily for studying the electrical excitability of normal and paralyzed muscle and to determine optimum current forms of stimulation of such muscle. It consists essentially of two main units, an oscillator and an amplifier, served by two power-pack circuits.

The two-tube *RC* oscillator employs a circuit that is conventional, except that frequency adjustment is accomplished by variation of the resistance branches of the frequency-determining *RC* bridge to cover a relatively wide range of frequencies on a single scale. Lower frequencies down to a fraction of a cycle per second can be obtained with the equipment.

Frequency multiplication is obtained by changing the values of the fixed capacitors in both capacitance arms of the frequency-determining bridge. Four scales in decimal multiples cover the entire frequency range. In each range the ratio of the maximum to minimum frequency is 100 to 1 (1.8–180, 18–1,800, 180–18,000, 1,800–180,000). A wide frequency band can be explored in each range.

A variable feedback control is provided between the first and second tubes to secure stable oscillation over extreme frequency ranges and to change the wave form. Variable feedback allows the arbitrary setting of any wave form between a square wave and a sinusoidal wave. The change in amplitude that necessarily must accompany change of feedback in certain regions can be compensated for by the use of the volume control between oscillator and amplifier.

A switching arrangement in connection with a terminal block between oscillator and amplifier allows a choice between oscillator input and that from an outside source.

The amplifier input stage contains two type 76 tubes, one serving as a phase inverter and the other as a voltage ampli-

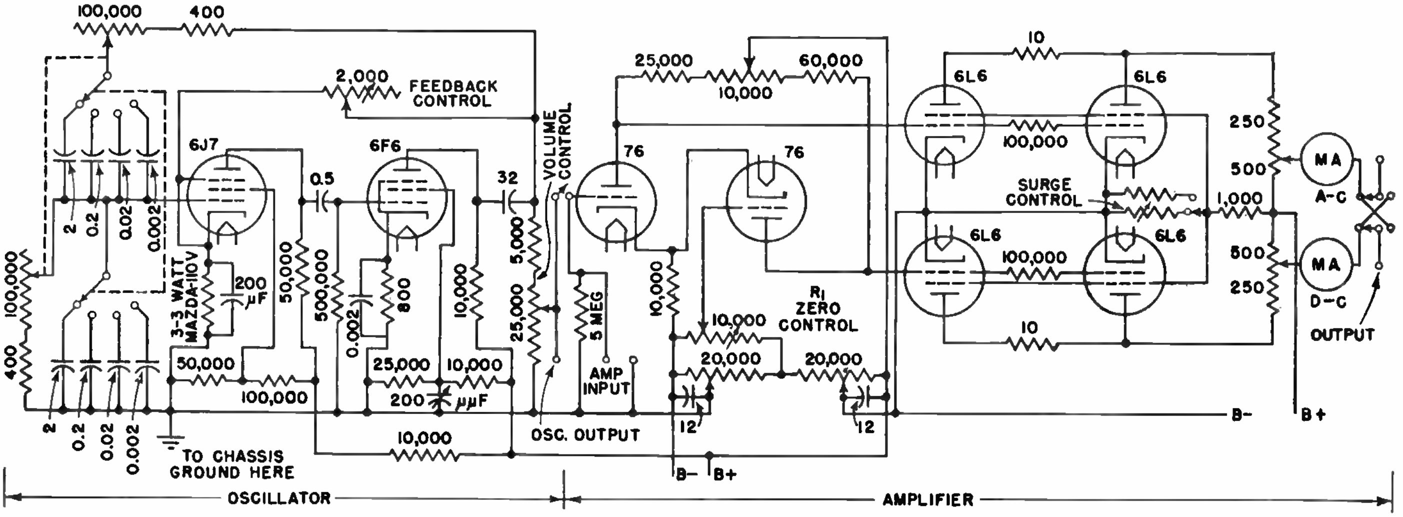

fier, feeding four 6L6 tubes in push-pull parallel. The phase-inverting stage and the output stages are so balanced that for zero voltage across the input terminals of the amplifier input both the a-c and d-c components in the output stage are zero.

The d-c component in the output stage is the differential current of the two push-pull stages. A variable rheostat R_1 allows a shift of the d-c component toward either positive or negative values. This feature of the instrument may be used to obtain output currents in which a d-c component is superimposed upon the alternating current.

The output leads of the final amplifier are in series with a d-c milliammeter and a thermocouple-type a-c instrument. When impressing symmetrical voltages on the amplifier input, the d-c instrument will show zero reading for any value of alternating current indicated by the thermocouple instrument. Similarly, any d-c component that is imposed upon the output by means of the rheostat R_1 is indicated both as to amplitude and polarity by the zero-center instrument. This instrument also indicates the degree of asymmetry of wave forms. The meters thus provide a quick check of wave forms, to supplement the oscilloscope ordinarily across the output.

Eugene Mittelman, Fred S. Grodins, and A. C. Ivy, Wide-range Electronic Generator, *Electronics*, December, 1943, p. 132.

Stable Beat-frequency Oscillator with Audio Output Range of 1 to 1,000 Cycles

THIS beat-frequency oscillator has an almost constant output voltage and a multiple range of voltage and impedance output. It exhibits no locking-in tendencies, has an excellent wave form, and gives appreciable output at 1 cycle per second. It makes use of inherently stable electron-coupled oscillators, symmetry in the physical layout with respect to internal heat, and electrical symmetry of the oscillator inductances.

Another element used to stabilize the oscillators electrically is a highly capacitive *LC* circuit. The additional capacitance, which may be either a mica dielectric or an air dielectric capacitor, is of value for another reason—the fact that a trimmer capacitor on the fixed-frequency oscillator will not produce a large percentage of change in capacitance of the resonant *LC* circuit.

The bandspread feature of this beat-frequency oscillator depends upon the trimmer capacitor. It varies the frequency of the fixed-frequency oscillator from 169 to 170 kc, which gives a change in the audio output of 1,000 cycles regardless of the difference frequency already produced.

The trimmer saves the expense of a tapered variable capacitor on the variable oscillator. The output of the fixed-frequency oscillator is fed into a resonant circuit that filters out the harmonics and gives a sine-wave output over the 169- to 170-kc range. The resonant circuit is necessary to prevent superflous beat notes that would otherwise be produced.

The variable-frequency oscillator contains a 500-μμf variable capacitor. The inductance coils of the oscillators may be designed for the a-f range desired, the only limitation being the fact that both oscillator inductances must be identical, physically and electrically. To obtain good wave form, the fixed-frequency oscillator signal is strong and of constant output while the variable-oscillator signal is rather weak. This results in favorable wave form as well as constant voltage output over the entire frequency range. The tubes used in the oscillator are metal; hence the only shielding necessary is that directly over the oscillator inductances.

The transformer (*T*) is an i-f three-winding type whose adjustment is not critical so long as the primary resonates at 169 to 170 kc. Balanced detection is especially adaptable because there is no tendency to lock-in at low audio frequencies. This detector affords an appreciable output, approximately 1 volt at intermediate frequencies.

The plate resistance of the detector is used as the terminating input resistance in the filter design, and the filter is terminated into the plate load resistors. Coupling capacitors C_4 are 0.5 μf each, and even though they offer a high resistance at low frequencies, 5 volts may be obtained at one cycle with an infinite terminating impedance.

The filter design is of the usual pi-section type, and is necessarily in both halves of the audio amplifier. When this filter is properly designed and terminated, it will remove all radio frequencies and will help to suppress superfluous beat notes. Some designers find it necessary to include two sections, but this is not necessary if the design and terminating resistors are correct.

A dual volume control is in the input of the first amplifier stage. The output of this amplifier may complete the oscillator, as 10 or more volts may be obtained between 100 and 12,000 cycles.

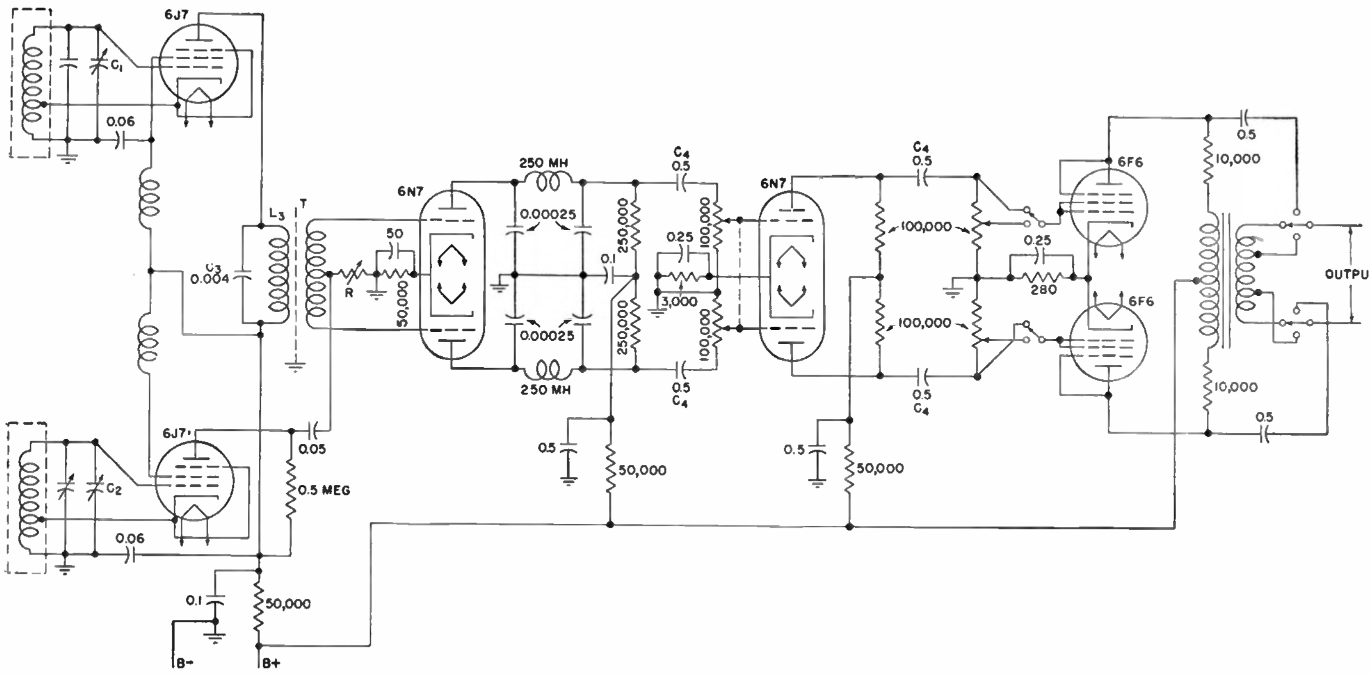

The last stage shown offers a higher voltage output and a choice of impedances. The 6F6 is normally used as a pentode, but its distortion proved to be relatively high, and hence it was connected as a triode. The resistors in the 6F6 plate load provide an impedance at low frequencies. The double-pole triple-throw switch provides for changing output impedances.

In place of automatic volume control, a simple vacuum-tube voltmeter using a 6E5 tuning-eye tube ensures a constant output independent of frequency. The output is adjusted to the desired level by the calibrated control on the vacuum-tube voltmeter, and the eye is closed by the volume control on the beat-frequency oscillator. Adjustment is normally required only over the low-frequency range.

C. W. Caldwell and C. W. Harrison, A Modern Beat Oscillator, *Electronics*, November, 1939, p. 50.

Wide-range R-F Signal Generator for Visual Alignment of Receivers

In this f-m signal generator for r-f and i-f alignment using an oscilloscope, the center frequency is continuously variable from zero to 60 mc, and the total frequency sweep from zero to 1.1 mc. There are no moving parts in the frequency modulator, and by plugging in audio frequency, the oscillator may be frequency-modulated with sine-wave signal, or program, for testing frequency-modulation receivers. A pyramid wave of 130-cycle voltage may be taken off from a jack for testing other equipment.

A 6SC7 relaxation oscillator in the first circuit generates a square wave, which is clipped and integrated in the 6J7 stage to form a pyramid wave. This wave is applied through a 6C5 buffer amplifier to the electronic reactance-tube circuit in the second diagram, which is similar to those used to control the oscillator frequency in automatic-frequency-control circuits.

The type 1853 control tube gives a pyramidal undistorted frequency modulation of 550 kc peak to peak on the 30-mc oscillator frequency. The oscillator output passes through a frequency doubler, the output of which is 60 mc modulated 1.1 mc total. This signal is then mixed with a signal whose frequency is manually variable from 60 to 120 mc, resulting in an output frequency variable from 0 to 60 mc without affecting the modulation.

The output wave of the relaxation oscillator is actually far from square, but sufficient voltage is applied to the clipper tube to cause a square wave of plate current to flow in the plate circuit. This square wave of current, flowing through the parallel combination of a resistance and a capacitance that has small impedance at the fundamental frequency, results in a pyramid wave of voltage. A type 6C5 tube, with its load in the cathode circuit in order to obtain low impedance and low distortion, supplies the pyramid wave to the control tube. When audio voltage is plugged into the external modulation jack, it goes to the grid of the 6C5, automatically disconnecting the pyramid-wave input.

Synchronizing voltage to lock the cathode-ray oscilloscope sweep in with the frequency sweep, in the proper phase, is obtained from resistor R_1 through C_1. In the double-trace system of alignment, which is most generally used, the cathode-ray sweep frequency is twice the pyramid-wave frequency. This gives a pattern consisting of two superimposed selectivity curves, one of which goes from low to high frequency and the other from high to low, as the spot moves from left to right. This necessitates a synchronizing pulse every half cycle. Since R_1 is common to the plate circuits of both triodes in the relaxation oscillator, the voltage across it will have the necessary double frequency. Fortunately the pulse of current in R_1 as one triode fires and the other cuts off is quite adequate to synchronize the oscilloscope. Since this pulse occurs exactly at the end of a half cycle, the phase is also correct.

No capacitance other than that contributed by the tubes and wiring is used across the tank-circuit inductance L_2 that serves as the secondary for L_1. This high L/C ratio is necessary in order to obtain the large frequency variation, since the number of micromicrofarads that the control tube can simulate is limited. The components C_1, R_1, and L_1 serve to shift the phase of the tank-circuit voltage so that the voltage at the grid of the control tube is 90 degrees ahead of the tank voltage. This causes the plate current of the control tube also to be 90 degrees ahead of the tank voltage, and the tube therefore looks like a capacitor and changes the frequency accordingly. The pyramid-wave voltage being also applied to the grid of the control tube, there is a variation of mutual conductance in accordance with the pyramid wave so that the effective capacitance varies in a like manner.

After frequency-doubling and amplifying, the f-m signal is mixed with the manually variable signal in a 6L7 mixer to provide the output signal.

The tuning dial is directly calibrated in mean output frequency, but since it is impractical to make this highly accurate, it is necessary when aligning circuits to a particular desired frequency to use an auxiliary accurately calibrated oscillator or signal generator. If its output is connected in parallel with the output of the visual-alignment equipment, the pattern will contain a zone in which the two signals are of nearly enough the same frequency to produce a visible beat. At the center of this zone will appear a point of zero beat, at which point the modulated frequency is equal to the fixed frequency. If the fixed frequency is set to the desired value and the tuning of the visual-alignment equipment varied until the zero-beat points on the two traces coincide, then the circuit will be aligned at the desired frequency when the traces coincide.

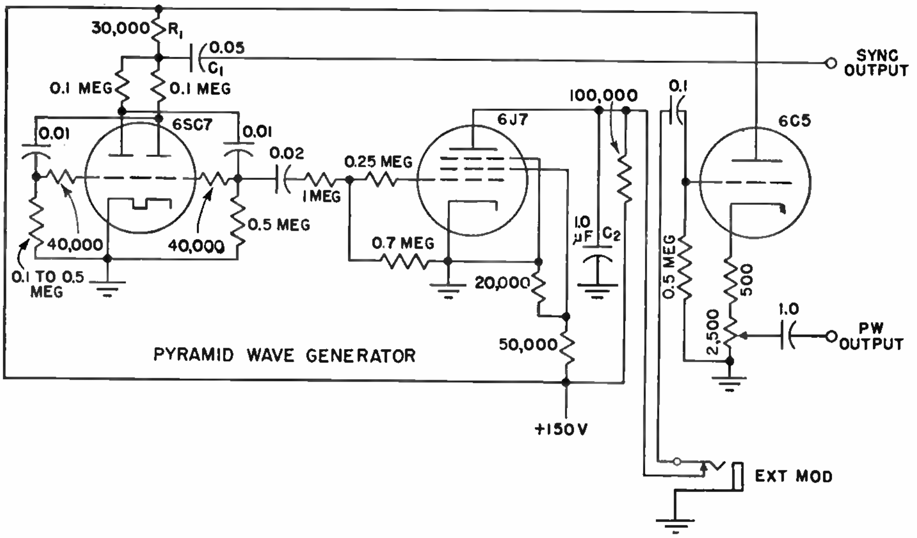

H. F. Mayer, A Visual Alignment Generator, *Electronics*, April, 1940, p. 39.

Stabilized Oscillator Using Automatic-frequency-control Circuit

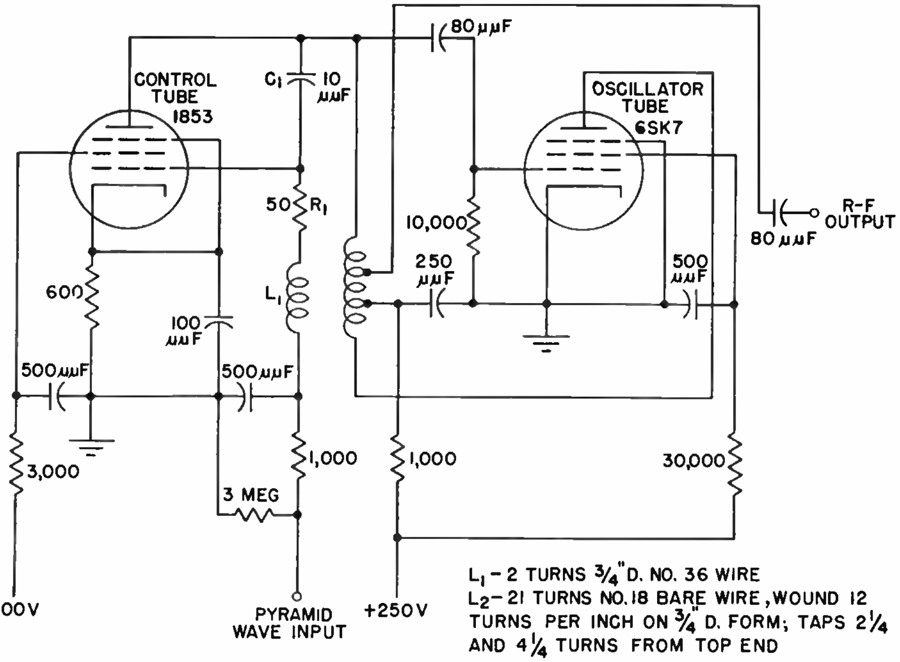

L1 - 2 TURNS 3/4" D. NO. 36 WIRE
L2 - 21 TURNS NO. 18 BARE WIRE, WOUND 12 TURNS PER INCH ON 3/4" D. FORM; TAPS 2 1/4 AND 4 1/4 TURNS FROM TOP END

NEGATIVE feedback can be applied to the self-stabilization of an oscillator as shown in the diagram. The oscillator feeds a frequency discriminator, thus applying a voltage varying with frequency to a frequency control that in turn changes the oscillator frequency. The discriminator control operates in such a direction as to oppose any change in the frequency of the oscillator.

It is possible for the discriminator to operate on a multiple, or submultiple, of the oscillator frequency, or the discriminator can be operated on some intermediate frequency by means of a stable heterodyne oscillator.

The oscillator is an electron-coupled arrangement and operates on a frequency in the neighborhood of 470 kilocycles. The control tube acts in such a manner as to vary the inductance in the *LC* circuit, thus tending to vary the oscillator frequency. The effective inductance is approximately $L(1 + g_m R)$ where g_m is the mutual conductance of the control tube. R is small, of the order of 150 ohms.

The discriminator operates on the oscillator frequency and is of a type used in the afc circuits of some broadcast receivers. C is a small phasing capacitor.

A measure of the stability is obtained by noting the effect of applied voltage variation and the drift during warm-up. In this arrangement, with maximum feedback a 10 per cent variation in the B supply or the filament voltage produced a maximum change in frequency of 25 parts per million. During warm-up, at the end of 1 minute the frequency was within 50 parts per million of the final frequency and at the end of 12 minutes was within 1 part per million of the final frequency. Using the oscillator alone, a 10 per cent change in the applied voltages changed the frequency about 400 parts per million, with the changes during warm-up having approximately the same proportionate increase. The effect of negative feedback in this case decreased any oscillator frequency instability by a factor of 16.

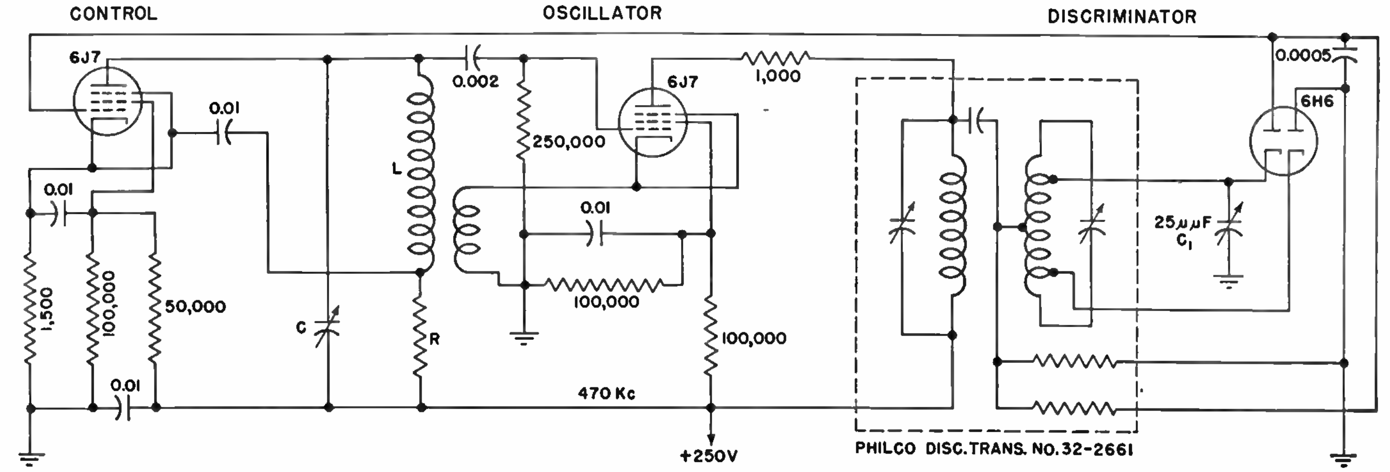

A disadvantage of the described arrangement is that the frequency range over which stabilization takes place is less than a kilocycle. It is possible, by appropriate design, to vary the feedback parameters and oscillator frequency simultaneously so that the point of optimum stabilization is maintained over any required frequency range.

One immediate application of such a stabilized oscillator is as a source of f-m signals. It is only necessary to apply a modulating signal to the frequency control, thus tending to vary the oscillator frequency.

Samuel Sabaroff, Negative Feedback Applied to Oscillators, *Electronics*, May, 1940, p. 32.

Square-wave Generator for Classroom Demonstration

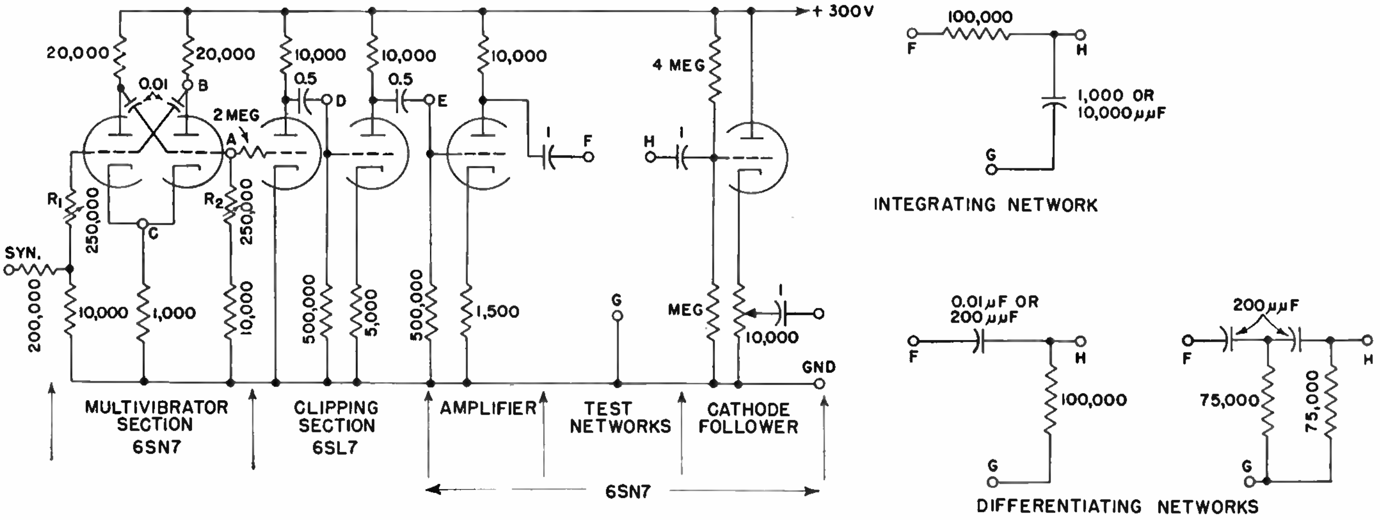

This square-wave generator circuit facilitates study of the method of production of square waves, and is arranged for convenience in studying the distortions of square waves that are produced by typical networks.

The apparatus consists of a multivibrator section, a clipping section, an amplifier, and an output cathode follower.

The amplifier triode increases the amplitude of the voltages fed to it at *E*. Thus the oscilloscope amplifiers, which usually have an inadequate range of response for such purposes, need not be employed. Second, the amplifier's grid is never driven to cutoff voltage and it presents a resistance to the test network that does not vary throughout the cycle, and which may therefore be included in the network computations if desired.

The test networks are rigidly mounted on Bakelite slabs and plugged in to make connection at *F*, *G*, and *H*. The output of the test network is fed to a cathode follower, which has the property that its output resistance is only a few hundred ohms.

The frequency of the square waves may be varied from about 150 to 2,000 cycles by means of ganged resistors R_1 and R_2. A calibrated dial gives the approximate values of the frequency directly. Various test points are provided at *A*, *B*, *C*, *D*, *E*, or *F* by bringing leads from these points to outlets on the top of the chassis. The output cathode follower may then have its input terminal *H* connected to any of these test points, and the output voltage from the cathode follower can be studied with a cathode-ray oscilloscope.

The student observes the multivibrator voltage wave form at the grid *A* and at the plate *B*. An observation at the common cathode connection *C* shows the double frequency of this voltage. Connecting to the points *D* and *E* shows the clipping actions produced in these two stages. A synchronizing terminal is provided so that a synchronizing voltage can be injected into the grid circuit of the multivibrator section. The locking-in process may then be studied by adding a fraction of the synchronizing voltage to the square-wave output.

E. H. Green and W. H. Mais, *Rev. Sci. Instruments*, 1947.

Pulse-generating Circuit Using V Portion of Full-wave Rectified Wave

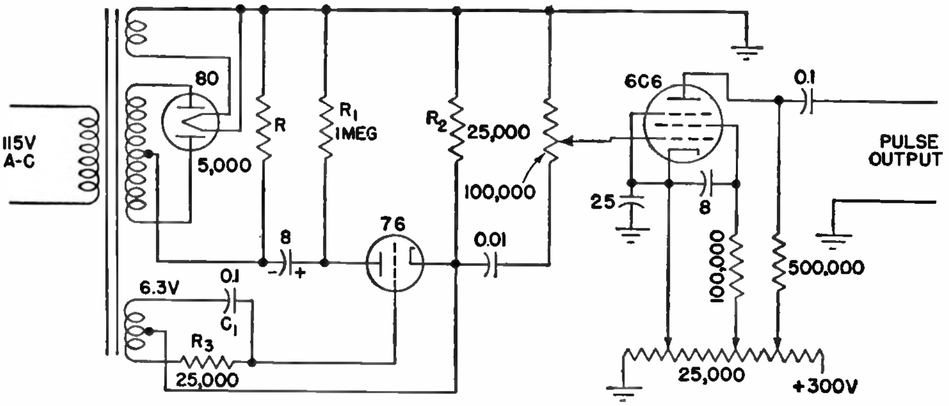

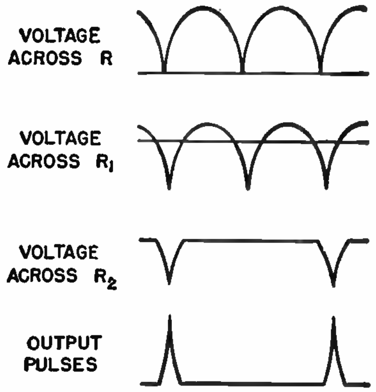

This circuit generates sharp impulses at power-line frequency for use in television sweep circuits, in grid control of industrial thyratrons, and in pulse-transmission experiments.

A 350-0-350 volt power transformer and a type 80 rectifier are connected in a conventional full-wave rectifier circuit feeding into a 5,000-ohm load. The V-shaped portion of the resulting rectified wave is utilized as the desired sharp pulse by first shifting the rectified voltage wave to a new zero axis by means of an 8-μf coupling capacitor, which is large enough to have negligible impedance. The zero-shifted voltage across the 1-megohm bleeder is applied to the type 76 triode, which acts as a rectifier and alternate peak suppressor. Since the voltage on the plate of this tube is alternating, the tube will conduct only during the portions of the cycle when the plate is positive with respect to cathode. Furthermore, since an alternating potential is used on the grid, some positive peaks will be passed freely while others will be suppressed if they arrive at the instant when the grid potential is very negative. With this arrangement, alternate peaks of the plate voltage are suppressed while the remaining ones are passed. This is done by shifting the grid a-c voltage 90 electrical degrees with respect to the line voltage. The grid of the 76 receives a voltage sufficient to wipe off alternate peaks.

The phase shift is accomplished by placing network C_1R_3 in series across a 6.3-volt winding of the power transformer, giving a phase-shifting circuit having constant output voltage over a range of from 15 to 165 electrical degrees. The alternating voltage is applied to the grid of the type 76 triode, resulting in a peaked output voltage across resistor R_2. This voltage is next applied to the 6C6 pentode biased beyond cutoff. By properly adjusting the bias on the pentode, sharply peaked output voltage pulses having an amplitude of about 100 volts are obtained.

The d-c potentials required for the plate, screen, and control grid of the pentode are readily obtained from the high side of the power transformer by means of a separate rectifier. Since the total d-c power required is small, a simple filter circuit may be used.

The generated pulses can be applied to the controlled circuit at the proper instant if the imput to the pulses is obtained from the power line through a phase-shifting device. A small wound-rotor induction motor, or a standard *RC* phase-shifting circuit with a 4-μf capacitor and a variable resistor across the transformer secondary, may be used for this purpose.

S. P. Sashoff and W. K. Roberts, Simple Pulse Generating Circuits, *Electronics*, September, 1940, p. 40.

Oscillator Acts as Electronic Switch for Life Tests of Relays

This electronic circuit for life tests of relays eliminates problems of mechanical contactors, such as the speed of interruptions, the chatter of interrupter contact, and the electrical noises that the contacts set up in the a-c line.

The 6SJ7 tube oscillates at the frequency at which it is desired to operate the test set. This oscillating frequency is determined by the *RC* tank circuit that serves as a modified long line, or phase, rotator. Each *RC* section of the tank produces a phase rotation of somewhat less than 45 degrees, and therefore the four sections included in the tank rotate the phase at the particular frequency of oscillation somewhat less than 180 degrees.

The impulse coming from the plate and rotated in phase by the filter is fed to the grid of the same 6SJ7, thereby producing the condition necessary for oscillation.

With an oscillating circuit of this type little difficulty is experienced in producing oscillations as low as 1 cycle per minute.

The oscillating signal produced by the 6SJ7 feeds a 6N6 output tube with a peak plate current at zero bias in the order of 80 milliamperes. This plate current saturates the cores of two step-up transformers, the primaries of which are connected in series with the 110-volt a-c line and the relay test panel. The secondaries, in the plate circuit of the 6N6, are so connected that whatever voltages are induced because of the voltage across the primary cancel each other. The use of these saturated chokes to key the a-c line proved very satisfactory. Fifteen watts of direct current dissipated in a properly designed choke system of this type can key well over a kilowatt of alternating current.

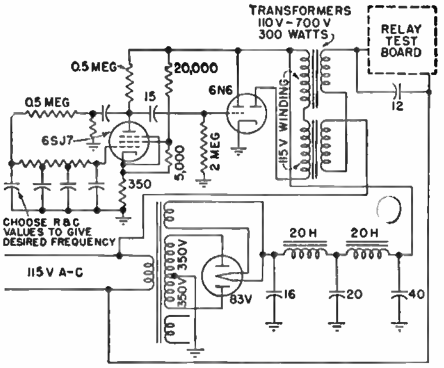

S. Bagno, An Electronic Relay Tester, *Electronics*, September, 1940, p. 44.

Crystal Frequency Comparator Using Two Oscillator Circuits

WITH this circuit, the frequency of quartz crystals is continuously monitored while they are being plated with gold to lower their resonant frequency. It consists of an oscillator circuit, for the crystal under test, a standard crystal oscillator, a mixer, and an audio amplifier.

The crystal unit is ground to a frequency roughly up to 300 cycles too high. It is then placed in a small evaporator housing and evacuated while connected to the comparator circuit. A filament switch is then turned on, causing gold to be evaporated and deposited onto the crystal unit. The filament button is held down as the beat frequency gradually lowers to a growl and finally stops at zero beat. The evacuation time is a matter of seconds, as also is the actual plating time.

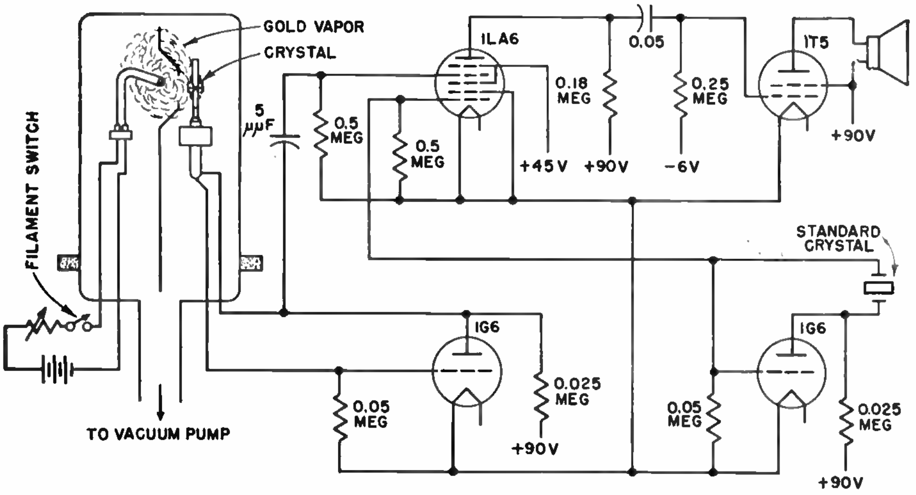

Quartz Crystals, Section of Report on IRE Winter Meeting, *Electronics*, March, 1946, p. 108.

Pulse-modulated Oscillator and Clamping Circuit for Amplifier Testing

A CIRCUIT for generating a train of sine waves in which the first cycle is identical with the following cycles is shown. The train may be initiated from an outside trigger and may therefore operate over a wide range of pulse-repetition frequency. Large peak-to-peak amplitudes are available, which require but small power input.

Frequency of waves in the train can be 20 mc and higher and still have a sufficient amplitude for direct deflection of a 5-inch cathode-ray-tube beam or for direct intensity modulation.

Three tubes are employed, a shock tube V_1, a clamp tube V_2, and an oscillator tube V_3. The shock tube V_1 has the characteristic of being able to pass large surges of current (in excess of 5 amperes) for a short interval and then remain in the ready state with the passage of a small current (in the order of microamperes). Clamp tube V_2 has the characteristic that its resistive impedance from cathode to ground, which is in parallel with the tuning coil of the oscillator, is very high when the tube is nonconducting (control grid biased negative) and very low (about 300 ohms or less) when the tube is conducting. Oscillator tube V_3 is permitted to oscillate or prevented from oscillating by the clamp tube by virtue of the tube resistance that shunts the tuned circuit.

In operation the circuit is in the ready state when C_2 is fully charged through R_3 to the supply potential. Tube V_2 is conducting, and tube V_3 is therefore in the nonoscillating condition.

When it is desired to set off a train of oscillations each of the same amplitude, a sharp positive pulse is applied to the thyratron grid through R_1C_1, causing the gas to ionize and C_2 to discharge through the interelectrode space and the primary of the high-frequency transformer. Simultaneously with the positive pulse on the thyratron grid, a negative gate is applied to the grid of the clamp tube through C_3R_4, causing the clamp tube to become nonconducting and permitting oscillations to build up.

Oscillations will therefore not have to build from low amplitude gradually, but can be equal or even larger than succeeding oscillations.

When the positive pulse that was impressed on the thyratron grid decays, the gas tube deionizes by virtue of R_3C_2 in the plate circuit, and the tube disconnects itself from the circuit except for the cathode-to-ground capacitance across the tuned circuit. Oscillations will continue until the negative gate on the clamp-tube grid is removed, permitting the clamp tube to become conducting and thereby quickly damping the oscillations.

Rate of decay is determined by the magnitude of the resistance the clamp tube shunts across the tuned circuit. Type 6J4, which has a very high value of transconductance, will damp the oscillations faster than will type 6C4. (In all cases decay time may be longer than rise time.) Meanwhile C_2 will be recharging through R_3 preparatory for the next cycle of operation. With a positive plate-voltage supply of 150 volts, it is possible to obtain as much as 80 volts peak to peak at 20 mc.

The circuit as shown is capable of operation at pulse-repetition frequencies ranging from less than 1 cycle per second to slightly over 5,000 cycles. Total average plate-current consumption of the three tubes does not exceed 10 milliamperes at the highest frequency of operation.

Some necessary precautions for obtaining optimum performance are the following:

The positive trigger that actuates the thyratron grid should have a steep rise, preferably in the order of 1,000 volts per microsecond.

The negative gate which actuates the clamp tube must rise quickly enough so that the clamp-tube current is cut off at the same time that the gas tube fires.

The transformer primary must be connected to the cathode of the shock tube by short leads. The primary must be closely coupled to the secondary, with the primary turns numbering one-half of the secondary turns, approximately.

R_7 is adjusted for flattest topped wave trains.

R_2 should be of sufficient resistance to limit peak current in the thyratron to a safe value as specified by the manufacturer. R_2 may be used to determine the initial amplitude of the generated sine-wave train.

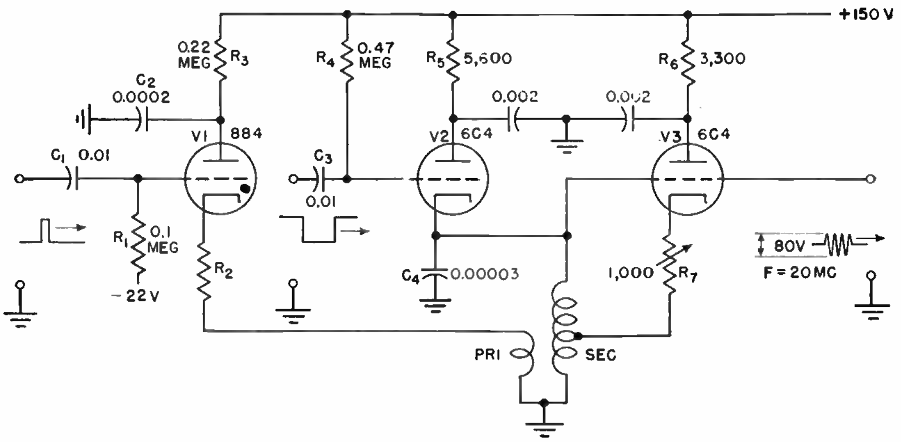

Allan Easton, Pulse Modulated Oscillator, *Electronics*, March, 1947, p. 124.

Sine-wave Oscillator Using Gas Discharge Tube

THIS oscillator circuit is simple and convenient and overcomes to a large extent some difficulties experienced with vacuum-tube and tuning-fork generators. It consists of the intermittent glow discharge circuit with an inductance inserted in the capacitor arm. Oscillations take place due to the difference between the striking and extinction potentials of the glow discharge tube. The d-c voltage supply charges capacitor C through resistance R until the voltage across the tube reaches the ignition, or striking, potential. The glow discharge then takes place, and the capacitor discharges through the tube until the voltage across the tube drops to the extinction potential and the glow discharge ceases. The cycle then repeats itself at a frequency determined by the constants of the circuit.

Capacitor C_2 blocks out the d-c component and its size depends upon the frequency range desired. For large values of C_2, R_2 should be made large (2 to 5 megohms) to prevent C from affecting the frequency. Rectified alternating current may be used for the d-c voltage supply when maximum constancy of frequency is not essential. Even then, however, ordinary 2 to 5 per cent line-voltage variations will not seriously affect the frequency.

For commercial glow lamps of the 110-volt type, the extinction and striking potentials lie about 10 volts apart. Although this value is reduced when discharges take place in rapid succession, there is still a considerable voltage swing on the capacitor due to series resonance, so that the effective voltage across R_2 is roughly 10 to 12 volts or more.

To ensure maximum purity of the output wave, it is best to shield the amplifier tube from the oscillator. Due to the high harmonic content of the current in the outer branch circuit of the oscillator, the amount of pickup, even at audio frequencies, may otherwise become objectionable.

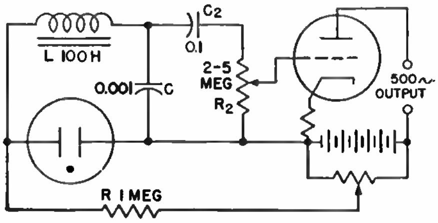

By making either the inductance or the capacitance variable, a constant-frequency generator of large frequency range is obtained. However, for large changes in capacitance or inductance, it becomes necessary to readjust the value of the applied voltage to ensure that the oscillator is operating on the flat portion of the frequency-voltage curve.

Winston E. Kock, Generating Sine Waves with a Gas Discharge Tube, *Electronics*, March, 1935, p. 92.

Switch-tube Control Circuit for Hartley Oscillator

ABRUPT starting and stopping of a 15-mc Hartley oscillator for the production of microsecond pulses is achieved here by a switch tube VT_1 whose cathode circuit is completed through the slug-tuned oscillator coil.

In effect, VT_1 functions as a variable-impedance load that shunts the tank coil of the oscillator. When the switch tube is conducting, the low effective shunt value will prevent sustained oscillations. If this effective value is of such magnitude that it will critically damp the tank coil, oscillations will die out very rapidly as VT_1 begins to conduct.

In operation, a negative pulse is applied to the control grid of the switch tube. At the beginning of the pulse, the sudden decrease in cathode current will shock-excite the oscillator and ensure a rapid build-up of oscillation. As the pulse passes, VT_1 begins conducting and quickly damps all oscillation. This circuit is capable of responding not only to a square negative pulse but also will follow the shape of any negative pulse impressed on the grid of the switch tube.

An alternate explanation of the switch-tube action can be based on magnetic fields. When the switch tube is conducting, a steady magnetic field around the oscillator coil will prevent oscillation; when the switch tube is cut off, the collapse of the magnetic field will initiate oscillation of VT_2.

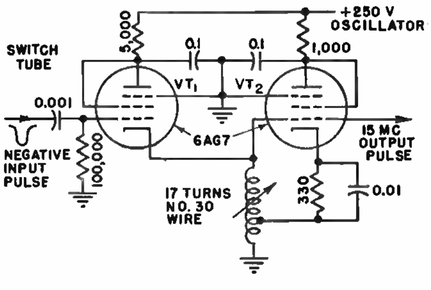

Finn J. Larsen, Ultrasonic Trainer Circuits, *Electronics*, June, 1946, p. 126.

Automatic Amplitude Control for Variable-frequency Oscillators

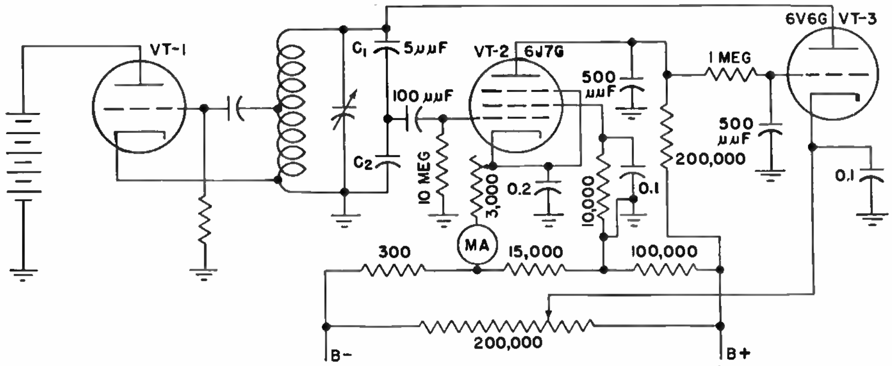

ADJUSTMENT of the frequency of oscillators by varying the capacitance or inductance of the tuned circuit is common practice, but without some stabilizing means the amplitude of the oscillation usually varies, sometimes considerably, as the frequency is changed.

A practical circuit used to hold the output voltage constant of a multirange oscillator covering frequencies from 30 kc to 9 mc is shown. The grid-cathode portion of *VT*-1 is used as a diode. Only a small fraction of the oscillating voltage is transmitted to the grid of *VT*-2 by means of the capacitive voltage divider C_1C_2. Tube *VT*-3 is used also as an electronic voltmeter, and the oscillating voltage across C_2 is indicated on meter *MA*.

The bias of the cathode of *VT*-3 should be adjusted until maximum stabilization is obtained. If the cathode should be given a positive potential greater than the maximum oscillating peak voltage, there will be no control at all, as the tube will always have an infinite impedance. By making the cathode progressively more negative, the control increases until some point is reached at which the load on the tuned circuit, at the peaks, becomes so great that the control is maximum and the amplitude of the oscillating voltage starts to decrease rapidly. The best operating point will be just before this occurs.

With the circuit as described and adjusted in the manner just explained, it is possible to maintain the oscillating voltage constant within about 1 per cent, whereas it would vary by perhaps 200 per cent without any control.

The circuit has been tried with five different coils in order to cover the frequency band from 30 kc to 9 mc, and for each coil the stabilization was found perfect.

M. M. Levy, *J. Brit. Inst. Radio Eng.*, March–May 1944, abstracted as Automatic Amplitude Control for Variable-frequency Oscillators, *Electronics*, September, 1944, p. 252.

Three-tone Audio Oscillator for Use with Electronic Gage

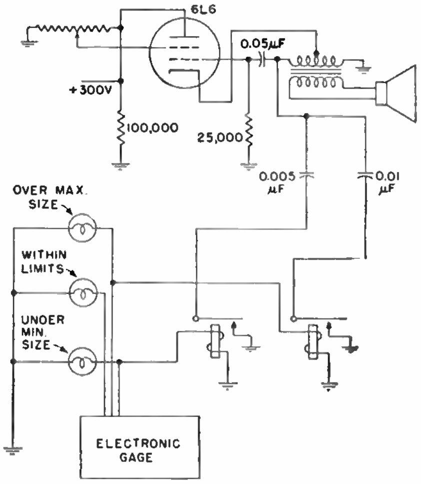

THE simple circuit shown provides audible signals to supplement indications of lamps of an electronic gaging system for such objects as ball bearings and other precision parts. The oscillator circuit is controlled by relays connected to the red, green, and orange indicator lights. For objects within acceptable limits, the normal frequency of the oscillator is heard. For oversize parts, a relay adds a 0.01-μf capacitor to the oscillator to provide a second frequency, while for an undersize part another relay adds a 0.005-μf capacitor for the third tone. The arrangement was originally developed to permit use of blind workers for precision gaging operations.

Precision Gaging by Blind Workers, *Electronics*, October, 1945, p. 156.

Simple Battery-operated Pulse-generating Circuit Using Cold-cathode Tube

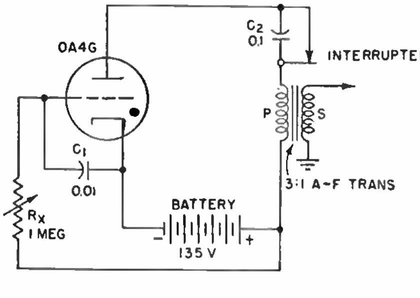

THIS circuit provides an economical source of pulses when battery operation is necessary.

When the circuit is placed in operation, the battery voltage charges capacitor C_1 through resistor R_x. As the capacitor charges, the voltage drop produced by current flow through R_x decreases, and the grid of the cold-cathode gaseous triode tube becomes more positive with respect to its cathode, eventually firing the tube. When the tube fires, anode current flows through the primary of the output transformer until the anode circuit is opened by the interrupter (operated by magnetic flux generated in the primary of the transformer). Voltage pulses thus appear across the secondary of the transformer, and then may, for example, be used to energize an electric fence. The rate at which the pulses are produced may be varied by adjusting the value of R_x and thus changing the time required to charge C_1 and to discharge it through the grid-cathode path when the tube fires. Capacitor C_2 ensures proper saturation of the output transformer.

Lyman E. Greenlee, Simple Pulse-Generating Circuits, *Electronics*, January, 1943, p. 118.

Rectangular Pulse Generator with Frequency, Amplitude, and Length Controls

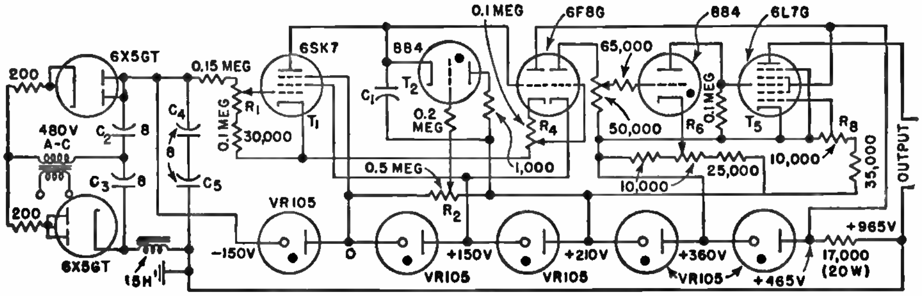

Although designed specifically for shocking rats in studies of anoxia, this pulse-generating circuit has many applications. It supplies a unidirectional rectangular current pulse of variable frequency, amplitude, and length. Each of these variables is independent of the others, and the amplitude is independent of load resistance.

Direct coupling permits operation at very low frequencies. Separate heater transformers must be used for each tube. Because of the small power requirements of the circuit, a voltage-doubler power supply is used. If electrolytic capacitors are used for C_2, C_3, C_4, and C_5, they should have working potentials of 600 volts and be shunted by 0.25-megohm resistors to equalize their leakages.

Voltage-regulator tubes maintain all voltages sensibly constant for the direct coupling and ensure independence of the controls. Tubes T_1 and T_2, together with their associated circuits, constitute a saw-tooth generator that can be used to supply the sweep voltage for cathode-ray tubes. A large capacitor of good quality for C_1 will permit frequencies as low as one cycle in several minutes to be generated. The circuit will operate as high as 20,000 cps.

The 6F8G duotriode constitutes a cathode-coupling stage from the saw-tooth generator and an amplifier that triggers the 884 switching tube. The rectangular output of this tube is amplified by the 6L7G pentode, which, because of its high plate resistance, provides a constant-current output for the pulse generator.

The pulse is controlled by variable resistors. 50,000-ohm R_5 controls length of the nonconducting portion of the cycle by varying both the bias and signal applied to the second 884. By varying R_8, the amplitude of the stimulus applied to the subject can be varied from zero up. Pulse frequency is controlled by R_1; several values of C_1 can be used to change the range. Because cathode coupling is used from the saw-tooth generator, the frequency control can be reliably calibrated.

Because the circuit is direct-coupled, all constants are critical. The cathode-coupler amplifier must first be adjusted. With an oscilloscope across R_5, controls R_2 and R_4, are varied simultaneously until a saw-tooth wave of maximum undistorted amplitude is seen.

The setting of R_5 depends upon the required range of pulse length. The shortest pulse length obtainable with this circuit seems to be $1/10$ cycle; there is no limit to maximum length.

The frequency control may be calibrated using a low-frequency oscillator and an oscilloscope. The amplitude control is calibrated by putting a d-c milliammeter in series with a fixed resistor of the approximate impedance of a subject across the output. The cathode lead of T_5 is opened. Output current now flows continuously and R_8 can be calibrated directly from the milliammeter reading. The series resistor is used to duplicate operating conditions. The pentode can be considered a constant-current source so long as its plate potential is greater than 100 volts.

The pulse-length control is calibrated after R_8 has been calibrated. With the pulse-generator operating normally and the milliammeter across the output as before, R_5 is varied. If, for example, R_8 is set at 2 ma and the meter reads 0.2 ma, then current is flowing for $1/10$ cycle. In this manner R_5 is calibrated.

Because R_4, R_5, and R_6 carry several milliamperes of current, it is advisable to use wire-wound potentiometers. At the higher frequencies the pulse rounds slightly at the corners because of the deionization time of the thyratron.

Rollin E. McCombs and Frank C. Walz, Rectangular-pulse Generator, *Electronics*, March, 1946, p. 222.

Overdriven Resistance-coupled Amplifier Produces 60-cycle Square Waves

The circuit diagram of a simple 60-cycle square-wave generator is shown. It consists of a two-stage resistance-coupled amplifier. A 60-cycle sine wave is applied to the input of the amplifier. The positive and negative peaks of the sine wave are clipped off by the amplifier. The output of the square-wave generator can be obtained from either the cathode or plate circuit of the second stage. Both stages are grid-leak biased. The second stage has degenerative cathode bias as well.

The 60-cycle sinusoidal signal applied to the grid of the first tube has an amplitude of approximately 150 volts rms. This voltage is obtained from the heater supply by means of a step-up transformer. The transformer is a plate-to-voice coil coupling transformer and has a turns ratio of approximately 50 to 1.

The output of the second stage can be obtained from either the plate circuit or the cathode circuit. The cathode circuit provides a low-impedance source of low output while the plate circuit provides a high-impedance source of high output.

This simple method cannot be used to convert high-frequency audio sine waves into square waves because the series grid resistor to the first stage, in conjunction with the input capacitance of the first tube, forms a low-pass filter. This filter causes frequency and phase distortion over the range of frequencies included in higher frequency square waves.

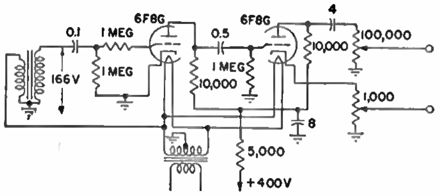

Karl H. Martin, A Simple 60-cycle Square Wave Generator, *Electronics*, July, 1941, p. 46.

Utilizing Square-wave Principle to Generate Sharp Pulses at Power-line Frequency

HERE is a simple circuit for supplying synchronizing, or keying, pulses at power-line frequency, having a sharp wave front and of short duration, for such applications as synchronization in television, control of industrial grid-controlled gas-filled tubes, and radio transmissions for ionosphere research.

The circuit operates on the principle that simple transients are set up in an *RC* series network when a square wave of voltage is applied to its terminals.

Line voltage is applied to a 6H6 double diode used as a half-wave rectifier. The rectified output across a 50,000-ohm resistor is then fed directly to the grid of a 6SJ7 pentode operating at zero bias. The polarity of the signal applied to the grid is such that it always drives the grid in a negative direction. The 6SJ7 is thus very rapidly driven to cutoff and a square-wave voltage appears across its plate resistor R_3. This voltage is applied across R_2 in series with C_1. The resultant transient across R_2 consists of two sets of output pulses, one sharper than the other. The circuit thus offers a choice between two pulses, which can be separated by a diode or biased triode.

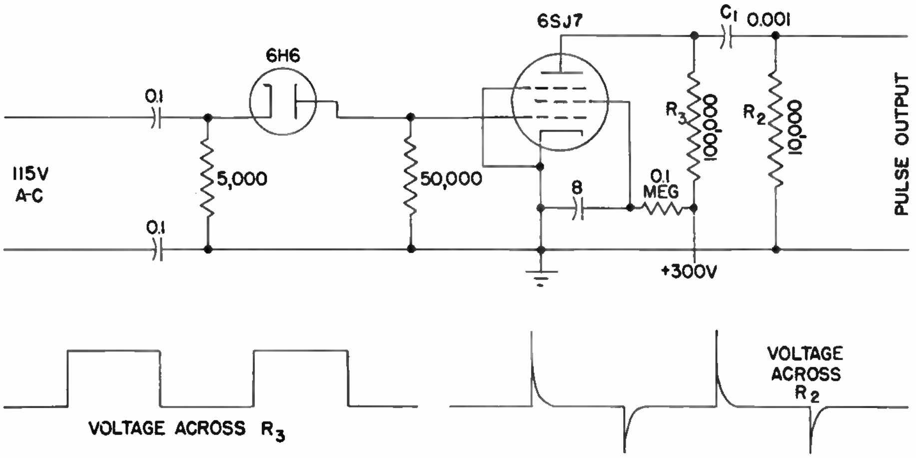

The presence of the second pulse usually is of little importance, since it occurs in a direction for which the controlled device may be made inoperative.

The general pulses are approximately triangular in shape. If a flat-topped pulse is desired, it can be readily obtained by applying the voltage across R_2 to the grid of a second amplifier in a positive direction and driving this tube to saturation.

The width of the desired pulse can be controlled by selecting appropriate values for C_1 and R_2. The width of the narrower pulse generated for $C_1 = 0.001$ μf and $R_2 = 10{,}000$ ohms is of the order of 100 microseconds. The peak is about 100 volts.

S. P. Sashoff and W. K. Roberts, Simple Pulse Generating Circuits, *Electronics*, September, 1940, p. 40.

Microsecond Pulse Generator Using a Thyratron to Discharge a Capacitor

THIS simple circuit provides sharp pulse-type signals of variable duration at high repetition rates. It uses a thyratron to discharge a capacitor that is recharged from a d-c source through a limiting resistor.

For an FG57 thyratron the duration of the pulse is determined solely by the capacitance of the discharging capacitor. After the capacitor value has been lowered to a point where the capacitor can charge to the applied direct voltage, the amplitude of the pulse is proportional to the size of the capacitor.

Repetition rates between 60 and 400 per second were found practical with smaller tubes such as the 884. Adequate shielding from stray fields and from light is recommended for the gas tubes, especially the more sensitive types, such as the 2050, 2051, and 2D21.

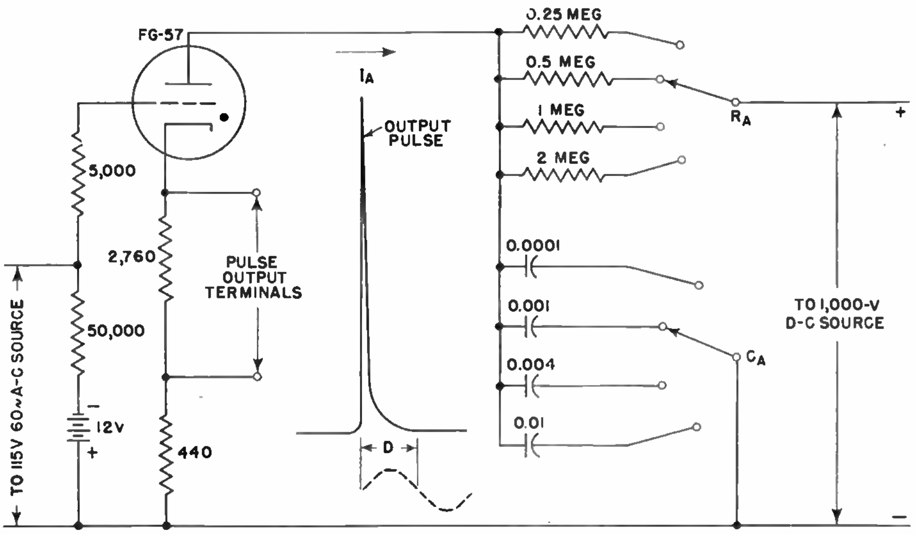

E. F. Kiernan, Microsecond Pulse Generator, *Electronics*, September, 1944, p. 141

Unmodulated Test Oscillator for A-M, F-M, and Television Frequencies

Eight coils arranged for band switching in this continuously variable test oscillator circuit provide complete coverage from 100 kc for broadcast i-f alignment up to 150 mc for f-m and television servicing. The first section of the 6J6 double triode, connected as a Hartley oscillator, feeds the second section operating as a grounded-grid amplifier, with the plate circuit being purely resistive and 500 ohms. The oscillator output voltage is thus fed into the amplifier triode through a common-cathode connection in such a way that only a very small load is reflected back to the oscillator circuit through the amplifier triode while the instrument is in use, making for excellent stability.

At 150 mc and 15 per cent feedback, an output voltage of 10 volts rms can easily be developed across the 500-ohm plate load, with slightly higher output voltage at lower frequencies. For the six lower frequency bands the two tuning capacitors are operated in parallel, while for the 45- to 75-mc and 75- to 150-mc bands the larger tuning capacitor is switched out.

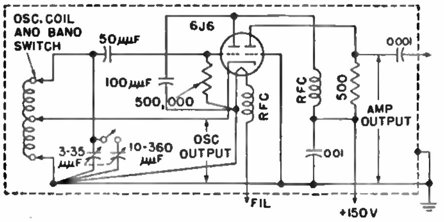

A rotary coil system is recommended for maximum operating efficiency.

Werner Muller, Test Oscillator for New AM-FM-Tele Needs, *Electronic Industries*, February, 1946, p. 86.

Single-stage F-M Detector Using Heptode Tube

This circuit uses a special heptode tube arranged as an oscillator and phase detector, giving a single-stage detector for f-m receivers. Output at full deviation is 20 volts peak to peak, and response to amplitude variation is 50 db less than to frequency change.

The output of the i-f amplifier is applied to one of the two control grids of the heptode, shown as grid 3, and audio is derived from the plate current of the tube.

One of the two tuned circuits is connected to the first grid of the heptode, while the other is connected to the heptode plate. Both tuned circuits are tuned approximately to the intermediate frequency, and the plate-tuned circuit is damped so as to have a bandwidth approximately six times that of the useful deviation band.

Because of feedback of energy from the electron stream to the input grid, it is desirable to drive the detector from a source having fairly low impedance. Thus a stepdown transformer (having an effective turns ratio of about 3 to 1) is used at the input.

The first three elements of the tube, together with the tuned circuit *B*, comprise an oscillator. Since the screen is bypassed to ground, oscillator voltage appears on grid 1 and the cathode. The oscillator operates class C, so that the space current through the heptode consists of a series of pulses.

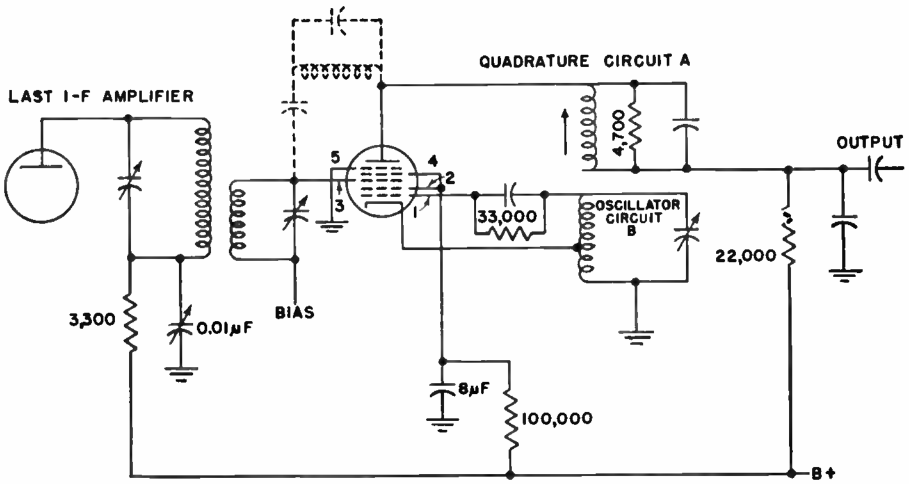

Application of the f-m signal to grid 3 affects the amplitude of the oscillator plate-current pulses, depending on the relative phases of signal voltage and oscillator current. The plate of the tube is coupled through a reactive circuit to the oscillator tank circuit. Owing to the resulting phase shift, the plate-current pulses constitute a reactive loading on the oscillator tank; the oscillator frequency will vary with the plate-current pulse amplitude and, under proper conditions, the variation will be linear.

The phase of the incoming signal with respect to the oscillator, by affecting the plate-current magnitude, affects the oscillator frequency. This causes the phase relation to change, tending toward an equilibrium phase relation. It follows that the oscillator locks into a nearly fixed phase relation with the incoming signal. The oscillator frequency is consequently the same as that of the signal. But the oscillator frequency is directly proportional to the pulse amplitude, which alone governs it, so that this plate-current component must vary linearly with signal-frequency deviation.

Finally, from the fact that the mean plate current is proportional to the pulse amplitude, it can be concluded that the mean plate current (and audio output) varies linearly with the signal frequency.

The width of the pulses is controlled by the loading reflected into the oscillator circuit by the phasing circuit. No more coupling to the phasing circuit should be used than enough to give the required deviation sensitivity, as excessive coupling causes wide pulses. An extremely small response to amplitude modulation may remain owing to the presence of stray coupling between the input signal and the oscillator.

The neutralizing circuit (shown dotted) consists of a blocking capacitor in series with a nearly self-resonant choke and can effectively remove the residual response to amplitude modulation when it is uneconomical further to reduce stray capacitance. This has not been found to be noticeably better under field conditions, however, since the unneutralized circuit has negligible amplitude-modulation response.

William E. Bradley, Single-stage F-M Detector, *Electronics*, October, 1946, p. 88.

Single-tube Reactor Oscillator for Remote Frequency Control

In remote control of radio receivers it is usually necessary to control an oscillator over a small tuning range. This is the case when adjusting a beat-frequency oscillator to obtain the desired a-f output or when an adjustment of the frequency of the heterodyning oscillator associated with the first detector is necessary to compensate a frequency drift in the receiver or transmitter. Compact design such as is necessary in mobile equipment makes it desirable to use a single tube for this purpose.

The circuit shown is an oscillator and reactance-tube control system using a single pentode tube. The frequency range of the oscillator can be made controllable over a range of at least 2 per cent by means of a variation in the d-c potential applied to one electrode of this tube. The absence of any r-f voltage on the controlled circuit makes it possible to use unshielded wires within a power cable for the control leads.

The cathode, grid, and screen grid of the tube are connected as a conventional triode grounded-plate Hartley oscillator. The screen is bypassed to ground for r-f and direct voltages applied through resistor R_2 to give the proper screen voltage.

Resistor R_3 in the plate circuit of the type 9001 tube gives the maximum available r-f output voltage at the plate of the tube when the frequency control R_4 is set at the maximum direct voltage position. Too large a load resistor will cause low output voltage because of the low direct plate voltage present at the tube, while too small a resistor will cause low output voltage because of the low r-f impedance of the plate load.

The frequency of this oscillator may be changed by altering the effective inductance or capacitance of the parallel resonant circuit, L_1C_1. Output voltage is taken from L_1 through a small capacitor, a tap on the winding, or an auxiliary winding.

Capacitor C_3 is of such a value that a maximum reactive component of the plate voltage is fed back to the resonant circuit. Two conditions govern the value of C_3. It should be made small enough to obtain maximum phase shift, and yet it should be sufficiently large to obtain minimum attenuation. The degree of control will vary somewhat with the transconductance of the tube, since this value determines the r-f voltage available at the plate. The oscillator output voltage varied between 25 and 35 volts for one particular tube as the plate voltage was varied between 0 and +200 volts. Screen current changed from 0.45 to 0.35 ma, and the plate current changed from 0 to 0.3 ma.

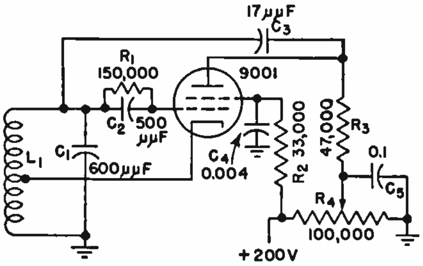

Frequency stability of this oscillator is such that when the supply voltage to the complete receiver is dropped 25 per cent, the oscillator frequency varies 0.005 per cent at one extreme of the frequency control and 0.067 per cent at the other extreme. It is possible to design the oscillator in such a way that the frequency shift is slightly negative with a change in battery voltage at one extreme of the controllable range and slightly positive at the other extreme, giving a minimum frequency change for a change in battery voltage for all settings of the frequency control. The choice of values for screen-dropping resistor R_2, grid resistor R_1, grid-coupling capacitor C_2, and the position of the tap on oscillator coil L_1, as well as the L/C ratio of the resonant circuit, will determine the stability of the oscillator.

The oscillator shown operates at 200 kc. It has a controllable frequency range of 4,000 cycles when operated from a 200-volt B supply.

The output voltage of the oscillator may be maintained within closer limits by reducing the range over which the plate voltage of V_1 may be varied. It is suggested that this range always start at zero volts on the plate, since this value is the condition for minimum effect of battery voltage due to change in transconductance of the tube upon the frequency of the oscillator.

Howard C. Lawrence, An Oscillator for Remote Frequency Control, *Electronics*, September, 1942, p. 42.

Frequency-modulated Encephalophone for Listening to Brain-wave Potentials

This electronic instrument converts brain potentials of the order of 10 microvolts to audio tones for practical clinic use in making surveys.

The audio method makes it possible to watch a noncooperative patient and thus identify extraneous potentials arising from friction, body movements, muscle activity, or eyelid movements. In visual methods it is not always easy to do this and at the same time watch the voltage pattern on the screen or paper. The frequency of the audio tone varies in accordance with brain potential changes, and the resulting slow changes in musical pitch are easily interpreted by the observer in terms of potential changes.

Brain potentials vary so slowly that the frequencies involved are far below the range of audibility and can be amplified directly only with special a-f circuits. For this reason, a frequency-modulation method was used. Two r-f oscillators, operating at about 5,000,000 and 5,000,500 cycles, respectively, normally produce a 500-cycle beat frequency in a converter stage. If, for example, the brain potential is made to vary the frequency of one oscillator by 50 cycles, the beat note will also change 50 cycles, and the resulting change in audio tone will be easily recognized.

The circuit diagram of the instrument is shown. The r-f signals are produced by triodes VT_1 and VT_2, each in a Hartley oscillator circuit. The outputs of these oscillators, of the order of 5 mc, are electronically mixed in converter tube VT_3, and the difference frequency in the plate circuit is transferred to the headphones through audio transformer T.

Frequency modulation is achieved with variable-mu pentode VT_4, which is in effect connected in parallel with the second r-f oscillator circuit. A change in the control-grid voltage of this tube varies the plate impedance of the tube, thereby varying the frequency of the oscillator circuit across which it is connected.

It was found that a voltage of 0.1 volt applied to the grid of VT_4 produced a change in tone easily recognized by anyone. Brain potentials being of the order of only 10 microvolts, considerable ampli-

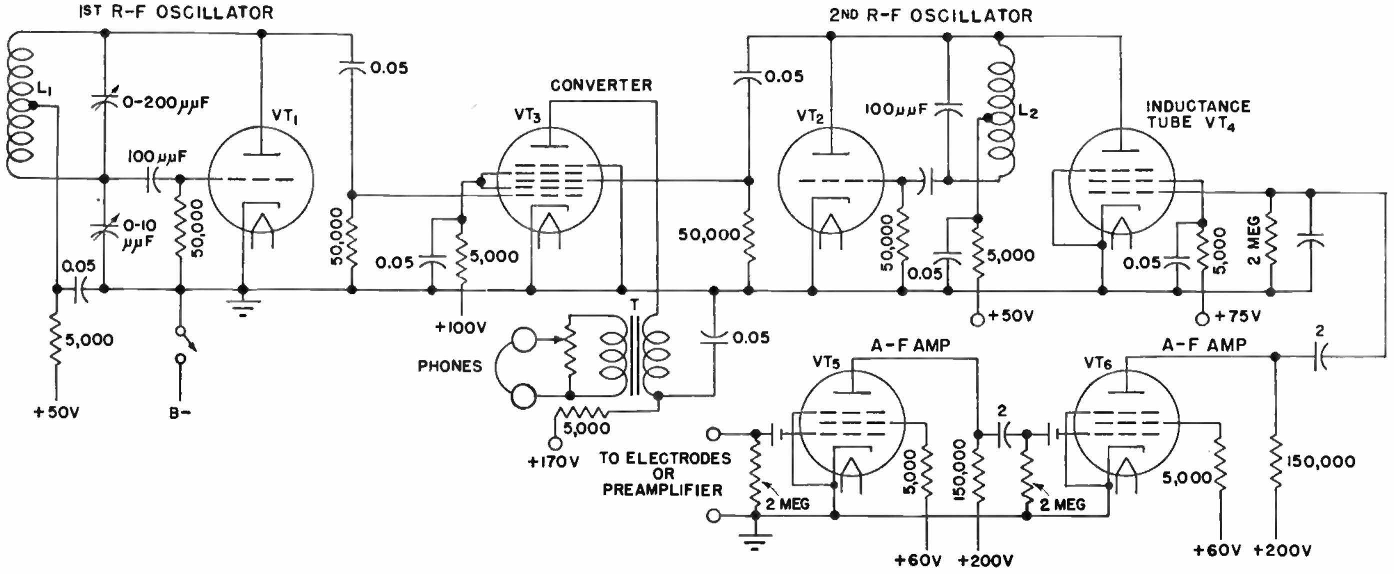

fication was necessary. A separate two-stage preamplifier unit was used to feed the two resistance-capacitance-coupled amplifier stages using tetrodes VT_5 and VT_6, respectively.

Because of the high value of the time constant of the amplifier, it takes about 1 minute for normal conditions to be reestablished after the instrument is switched on or after the electrodes are handled. During this period the pitch of the tone changes, finally becoming steady. A charged insulator, such as a fountain pen, waved in the air 2 feet away from the ungrounded electrode transforms the steady tone to a trill.

Disturbances due to near-by a-c lines cause a roughness of tone that makes perception of small changes in tone difficult; hence the apparatus should be kept as far as possible from a-c lines, and near-by lines should be shielded.

If a more accurate indication of the magnitude of a brain potential is desired, an artificial source of very small potential changes can be incorporated in the instrument and made to produce the same changes in pitch as are observed. The voltage involved can then be read directly on a calibrated potentiometer.

C. A. Beevers and F. Futh, *Electronic Engineering*, March, 1943; abstracted as Encephalophone Converts Brain Potentials into Sounds, *Electronics*, May 1943, p. 144.

Reactance-tube Frequency Control for Hartley Oscillator

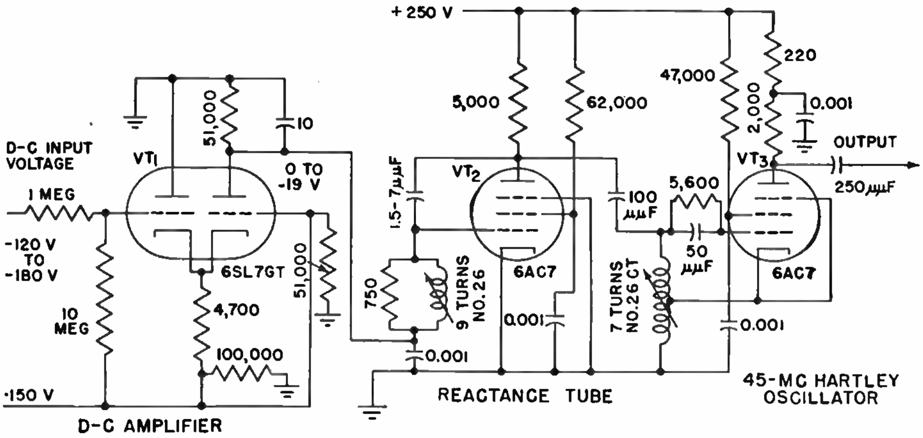

THE reactance-tube circuit given here can be used to vary the frequency of a Hartley oscillator in accordance with d-c input voltage variations. The reactance tube is shunted across the tank coil of the oscillator, and a d-c amplifier is used to convert the various d-c input voltages to a uniform voltage range for control of the reactance tube. The d-c amplifier converts the center of a voltage swing from −120 to −180 volts to a swing of approximately 0 to −19 volts.

The variable-reactance tube VT_2 is connected in parallel with the tank coil of the Hartley oscillator. The reactance tube and its associated circuit behave as a variable capacitor whose capacitance is determined by the mutual conductance of the tube. Since the mutual conductance of a variable-mu tube can be controlled by varying its grid bias, it is possible to change the frequency of the oscillator tank. In practice this oscillator can be easily varied in frequency from approximately 42 mc to 48 mc.

The frequency change which can be obtained by the use of a reactance tube is limited by the resistive load which the variable-reactance tube presents in parallel with the oscillator coil. As the grid voltage of the reactance tube changes, the effective resistive load also changes, and if it becomes too low the oscillator may stop functioning.

Finn J. Larsen, Ultrasonic Trainer Circuits, *Electronics*, June, 1946, p. 126.

Pulse-generating Circuit for Testing Crystal Rectifiers

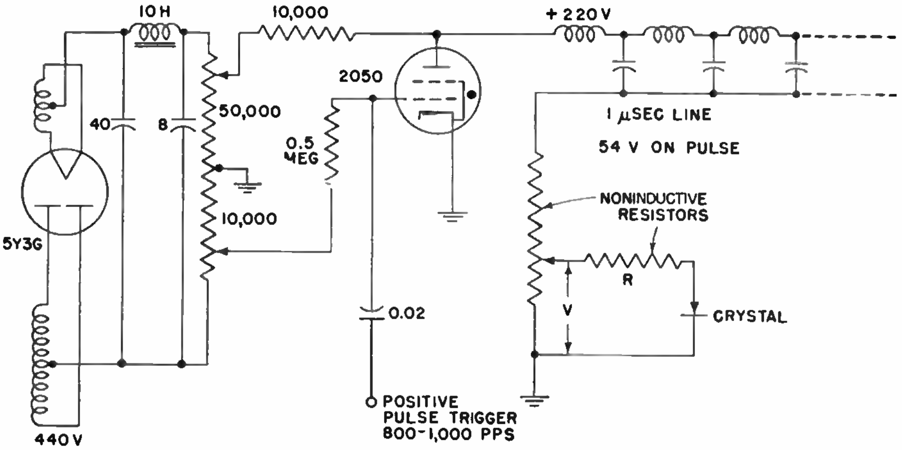

A METHOD of testing germanium and silicon crystals for burnout consists of exposing the crystal to a d-c pulse of about 1 microsecond width, obtained by discharging an artificial line through a thyratron into the crystal with the circuit shown. For reliable testing of crystal quality and ability to withstand overloading, the pulsing circuit should be matched to the crystal. The thyratron employed requires an external positive-pulse trigger source delivering 800 to 1,000 pulses per second, to trigger the thyratron grid and to initiate discharge of the capacitors in the 1-microsecond artificial line. The line is charged between pulses by a conventional full-wave rectifier circuit. A noninductive potentiometer in the discharge circuit permits matching to different types of crystals.

W. E. Stephens, Crystal Rectifiers, *Electronics*, July, 1946, p. 112.

Frequency-modulated Oscillator for Panoramic Receiver

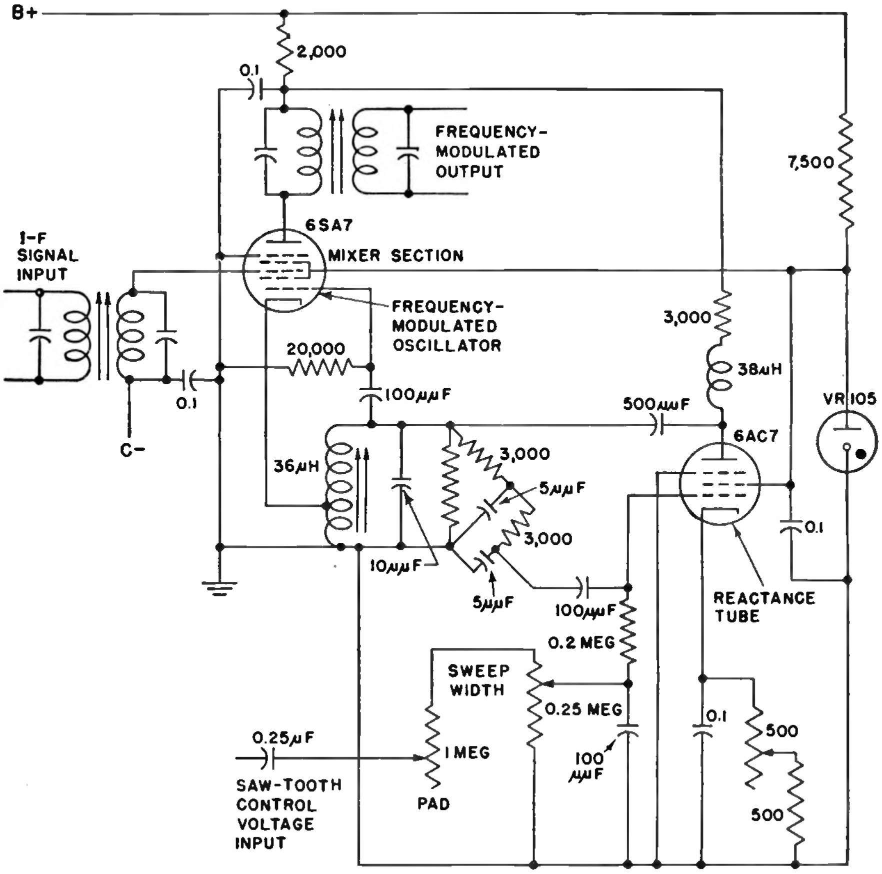

THE reactance-tube modulator shown has been used for electronically sweeping the tuning of a panoramic adapter over a desired band, but the circuit is basically the same as those used in f-m transmitters and in afc circuits of receivers.

At the output of an early stage in a receiver, as at the mixer output of a superheterodyne, signals have a usable amplitude which is as much as 100 kc on either side of the frequency to which the receiver is set, with amplification at the limits of this 200-kc band usually at least 20 per cent of that at resonance. A single r-f amplifier stage peaked near the edges of the band will more or less even out the selectivity characteristic of the receiver, giving a suitable output for feeding into the mixer stage shown.

The local oscillator for the mixer stage is varied linearly in frequency with time by a reactance-tube modulator, which in turn is controlled by a 30-cycle saw-tooth voltage. As a result, the output of this circuit is frequency-modulated in the manner required for panoramic receivers, wherein the frequency starts at the lower end of the 200-kc band and increases linearly until it reaches the upper limit, then snaps back to the lower limit to repeat the process, at a rate of 30 times per second. In a panoramic receiver this action provides on a cathode-ray-tube screen a pip for each station on the air in the 200-kc band being monitored.

The 500-ohm variable resistor in the cathode circuit of the 6AC7 regulates the point on the characteristic curve at which the tube is to operate in order to give symmetrical frequency deviations.

This frequency-scanning circuit lends itself to many industrial uses. Where a number of measured quantities can be converted into a voltage whose frequency at any instant is proportional to the magnitude of the quantity being measured at that instant, this circuit may be utilized for simultaneous observation of all the quantities on a cathode-ray-tube screen.

W. E. Moulic, Panoramic Principles, *Electronic Industries*, July, 1944, p. 86.

PHOTOELECTRIC CIRCUITS

Two-stage A-C-operated Photoelectric Control Circuit

This simple two-stage photoelectric amplifier-relay circuit operates directly from the a-c line. A high-impedance phototube feeds through a voltage amplifier, or buffer stage, into a power output stage. The filament voltage of the buffer stage is lowered to reduce the temperature of the grid and, hence to reduce electron emission from the grid. The plate current of the buffer stage is kept at a minimum in order to reduce the electron bombardment of the gas molecules within the tube and, hence, reduce gas current to the grid. The bias on the grid of the buffer stage is obtained by rectifying action of the grid itself. This method keeps the effective bias and the plate current constant regardless of large fluctuations in contact potential between the grid and the cathode.

The impedance of C_1 acts as a load impedance for the phototube. This capacitor is charged to a definite negative potential on half of the a-c cycle and is allowed to discharge through the phototube on the other half of the cycle. The amount that is discharged by the phototube depends on illumination and determines the working potential on the grid of the buffer stage. The value of C_1 determines the sensitivity range of the circuit. A relay operating on less than 30 ma can be connected to the output terminals.

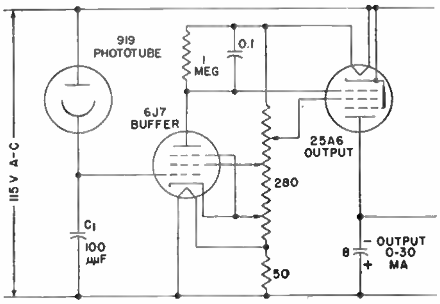

F. H. Shepard, Jr., Some Unconventional Vacuum Tube Applications, *RCA Rev.*, October, 1937, p. 149.

Photoelectric Control System for Automatically Aiming Solar Coronagraph

This twin-phototube amplifier circuit actuates relays that operate a reversible capacitor-type a-c motor to keep the phototubes positioned so that they receive equal light at all times. A reversible synchronous motor that serves uniquely as an antihunt arrangement is between the relays and the drive motor. The circuit was developed to keep a solar coronagraphic telescope aimed automatically at the sun. For this application, two identical phototube systems are required, one for control of declination and the other for control of hour angle of the telescope. The goal is to aim the telescope so that its internal eclipsing disk exactly masks out the sun, allowing only solar prominences to show. The phototubes receive light from the sun only when the disk is off center, and they actuate the drive motors in such a way as to restore centering.

Operation is from standard 115-volt 60-cycle power mains, with good stability at all ambient temperatures and with convenient control of sensitivity. A 6H6 voltage-doubler rectifier supplies direct current for the phototubes. The phototubes act as loads for each other, and together drive the type 38 amplifier tube, which has high input impedance. Gas current to the pentode grid is kept to a minimum by keeping potentials very low. The heater of the type 38 is operated at reduced voltage to increase input resistance, and is maintained positive with respect to the grid to reduce emission from heater to grid. The phototubes and the type 38 tube were carefully cleaned at installation and were then coated with white ceresin wax. The leads from the top caps of the 917, 919, and 38 tubes were kept to a minimum length, and were supported only by the tube caps themselves.

When the unit is in balance, the bias on the 6J5 triodes is such that the current flowing through the associated relays is sufficient to close the more sensitive 5,000-ohm relay, but not the less sensitive 2,000-ohm relay. In this condition the relays send no impulses to the antihunt units, and the telescope correction motors remain at rest.

When the light increases on the 917 phototube, and the light decreases on the 919 phototube, the bias on the 6J5 tubes changes so that the current through the relays increases until both are closed. If the light to the 919 increases and that to the 917 decreases, both relays open. The relays are shown in the condition produced by excess light to the 917 tube so that both relays are closed. An impulse is thus sent to antihunt units, which send suitable impulses to the correction motors of the telescope to decrease the hour angle (or the declination) until the 919 once again receives as much light as the 917.

The antihunt units afford additional desirable features to the control of the telescope. These units were designed for the purpose of preventing rapid correction-motor response to alternating impulses from the two relays, while at the same time retaining rapid response to repeated impulses from one of the relays. The units have nearly instantaneous response to a consistent telescope error that shows the repeated need for correction of the same direction. But they have very slow response (8 seconds) to the irregularly distributed aiming errors, generally caused by such factors as fluctuations in atmospheric seeing, which cause the sun's image to dance unsteadily on the disk in front of the phototubes.

The antihunt units are changeover switches driven by reversible synchronous motors that have a rotational speed of one revolution per 10 seconds. A cam is fastened to their shafts so that it engages limit switches after operation over adjustable limits (usually set at 8 seconds).

When a synchronous motor reaches one limit, it contacts the limit switch and disengages itself, at the same time changing over the relay circuit to feed directly into the telescope correction motor and to operate this motor in the correct manner. If correction impulses are alternating, but with pulses of one relay sustained longer than pulses of the other, the synchronously driven cam gradually drifts toward

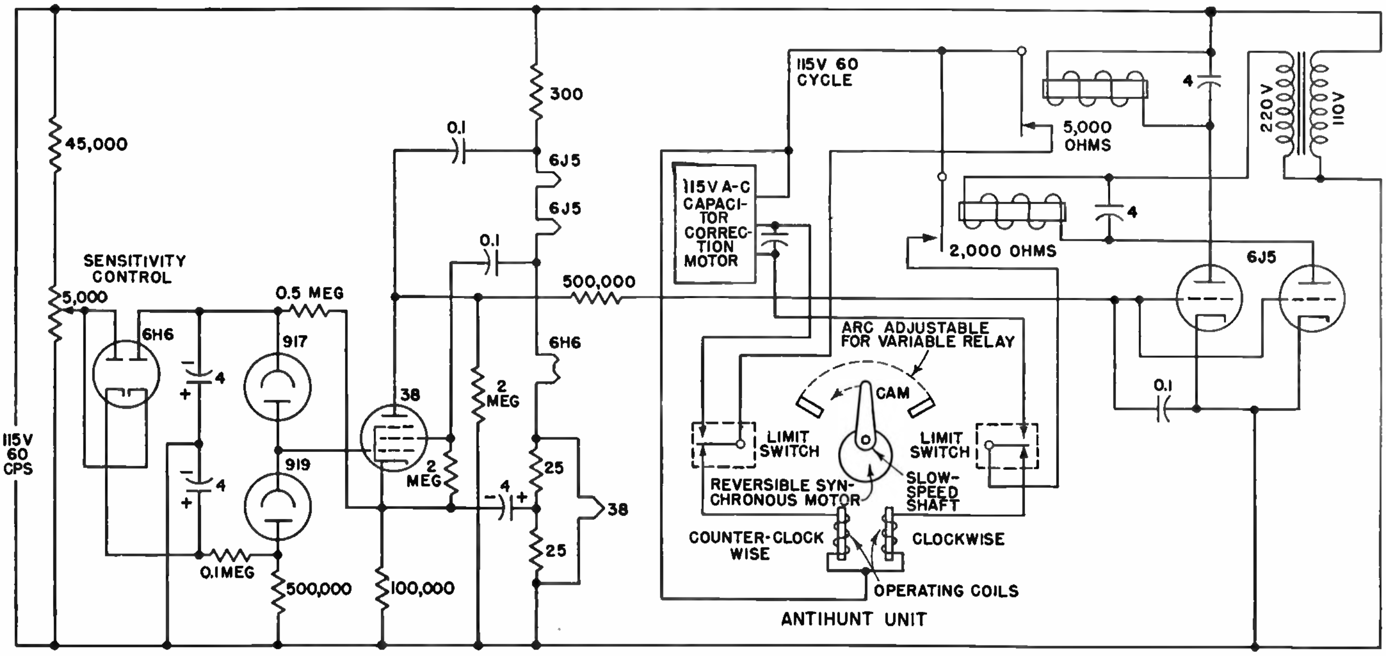

the limit of the impulse that is sustained the longer, and eventually it produces a suitable impulse to the correction motor itself.

As the apparatus is usually adjusted, its over-all sensitivity is about 1 second of arc. Because of the antihunt units the telescope will not hunt after errors larger than 1 second of arc unless they persist for 8 seconds of time, or unless on the average the fluctuations are greater in magnitude in one direction than in the other and unless this greater average persists for considerably longer than 8 seconds.

The correction motors themselves are standard small a-c motors. The hour-angle motor drives a differential gearing unit in the telescope mechanism to add or subtract slightly from the main telescope drive which consists of a synchronously driven worm gear which has been calculated to provide a telescope rate equal to the average rate of apparent motion of the sun through the sky. The correction rate is approximately one-twentieth the constant solar rate. The declination motor drives directly into a micrometer screw at a rate of 0.7 rpm to produce a rate of correction of the telescope aiming of about 2 seconds of arc in 1 second of time.

When this automatic guider is in operation, the telescope can be adjusted by positioning the guiding telescope lens properly; this is done at the start of a full-day run and the lens is left untended thereafter so far as aiming is concerned. The coronagraph is designed to take rapid-sequence pictures, at 10-second intervals, of the prominences of the sun. With the guider in operation, the aiming of the telescope is uniform from picture to picture, so that the films so obtained can be projected in a motion-picture apparatus with good steadiness.

Photoelectric control of a solar telescope eliminates the need for highly accurate constant-drive mechanisms or for costly rate-correction apparatus. Highly precise telescope aiming is possible without resort to highly precise equatorial mounting of the telescope. It would be entirely possible to provide a portable telescope mounted on a tripod with aiming of this same order of precision.

Walter Orr Roberts, Photoelectric Sight for Solar Telescope, *Electronics*, June, 1946, p. 100.

Quick-acting A-C-operated Photoelectric Control Circuit

A PULSE of light as short as $1/60$ second is sufficient to operate this circuit, which operates in a positive direction on received light so that the relay pulls in when phototube illumination increases. If the light pulse is properly phased with respect to the power-supply voltage, even a $1/120$ second pulse of light is sufficient for actuation.

On the negative half of the power-supply cycle, and with no light on the phototube, the cathode of the 6F5 goes negative with respect to the grid, passes current to the grid, and over a period of several cycles charges C_1 to the peak value of the a-c grid-cathode voltage. This voltage added to the instantaneous a-c voltage applied between the grid and cathode is sufficient to reduce the plate current of the output tube to zero.

When light is received by the phototube, the phototube current has two effects: (1) An instantaneous drop appears across R_1, and (2) the phototube current into C_1 opposes the current fed into C_1 from the grid of the amplifier. This action causes the potential across C_1 to balance at some negative value between zero and a value equal to the peak of the a-c grid-cathode voltage. The potential across C_2 is fixed in like manner by a balance between the charging grid current and the discharging buffer-tube current.

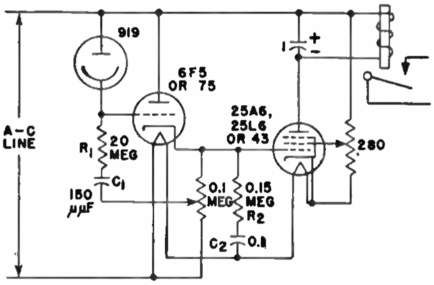

An instantaneous flash of light occurring on the positive half of the cycle will cause an instantaneous drop across R_1, an instantaneous change in the plate current of the buffer stage, and an instantaneous change in grid voltage of the output tube.

F. H. Shepard, Jr., Some Unconventional Vacuum Tube Applications, *RCA Rev.*, October, 1937, p. 149.

Photoelectric Timer for Automatic Control of X-ray Film Exposure

An electron multiplier phototube, thyratron, and several ignitrons in this simple electronic circuit make correct exposure of X-ray film an entirely automatic process. A fluorescent screen and the phototube are mounted behind the X-ray film cassette, so that when the X-ray machine is turned on a roentgen beam passes through the patient, exposes the film, and excites the fluorescent screen. The resulting light, proportional to the intensity of the radiation passing through the film, is picked up by the phototube and is converted into a voltage that charges a capacitor. When the capacitor voltage reaches a predetermined level, it triggers off a thyratron, which in turn energizes ignitrons and relays which turn off the X-ray machine, thus terminating the exposure.

The type 931 multiplier phototube contains nine dynodes in addition to the conventional photocathode and anode. The No. 9 dynode is employed as the control electrode of the circuit in place of the anode, because the charge delivered to capacitor C by the anode would be of the wrong polarity to activate the thyratron. Although the potential of this dynode with respect to the photocathode increases as the capacitor becomes charged, this does not appreciably change the sensitivity of the phototube over the normal operating range.

Operating potentials for the phototube and for the grid of the thyratron are provided by a voltage-doubling circuit that uses two 5W4 tubes fed by the 400-volt secondary of the power transformer. It is desirable to connect the primary of this transformer to a stabilized 115-volt a-c source, such as the primary filament circuit of the X-ray machine. The same source may also provide plate voltage for the thyratron, which is self-rectifying.

The timing mechanism controls the X-ray machine through the two relays 1 and 2. After a film has been inserted in the film tray and the patient has been properly positioned, the machine is adjusted to any reasonable voltage for the anatomical structure under examination, potentiometer R_s is set to the speed number of the film to be exposed, and starting switch Sw_1 is closed. This energizes the main relays, or ignitrons, of the X-ray machine and begins the exposure. When exposure is completed, as determined by charging of C to the value required for triggering the thyratron, the resulting thyratron plate current energizes relay 2 opening its contacts and thereby breaking the circuit to the X-ray machine. At any convenient time thereafter, switch Sw_1 is opened manually, deenergizing relay 1. C then discharges through the closed contacts of this relay and the thyratron deionizes, preparing the timing mechanism automatically for the next exposure.

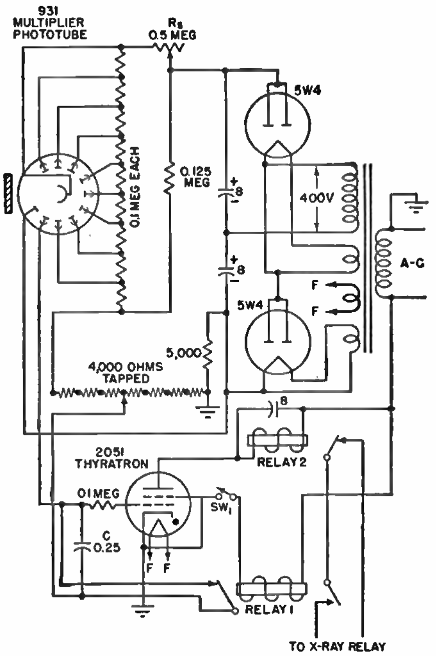

The initial voltage on the control grid of the thyratron is governed by the setting of the tapped voltage divider. This adjustment permits compensation for changes in the response of the phototube and its fluorescent screen when the voltage of the X-ray tube is altered and a Potter-Bucky grid, or an intensifying screen, is used.

Russell H. Morgan, Studies in Roentgenographic Exposure Meter Design, *Am. J. Roentgenology and Radium Therapy*, July, 1942, p. 88, abstracted in *Electronics*, July, 1943, p. 178.

Photoelectric Shutter-opening Circuit for Flash Bombs

Here is a photoelectric control circuit that responds to a high-intensity flash that is fast enough to actuate a relay within a few microseconds. It was used originally in nighttime aerial photography to trip the shutter of an aerial camera exactly at the peak of the light intensity of a flash bomb exploded far below the airplane, and it lends itself nicely to any control application requiring fast response to a flash of light.

The circuit provides a positive pulse at the grid of a 12SJ7 pentode when the type 930 phototube is illuminated. Phase reversal of the pulse by the 12SJ7 places a negative pulse on the grid of the 6AG7 power-amplifier tube, causing the plate current of this tube to drop in response to a flash of light.

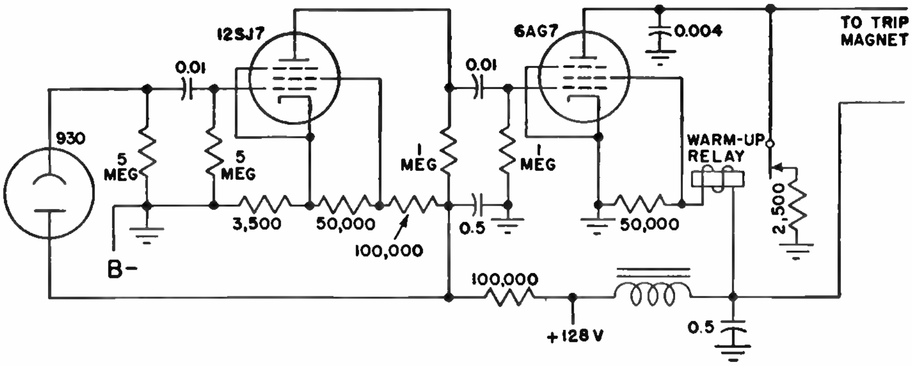

The plate load for the output stage in the original application was a trip magnet that held the camera shutter inoperative during darkness but allowed a spring to trip the shutter when the plate current dropped. The warm-up relay prevents operation of the shutter, during the interval when tube heaters are reaching operating temperature after the circuit is turned on, by shunting the trip magnet coil to ground through a 2,500-ohm resistor to keep the coil energized until the 6AG7 begins drawing enough plate current to pull in the relay and hold the trip coil by itself.

Photoelectric Flash-camera, *Electronic Industries*, July, 1944, p. 95.

Multiplier Phototube Circuit Replaces Film in X-ray Inspection

Automatic X-ray inspection of parts for internal defects is made possible in the accompanying circuit by placing a type 931 multiplier phototube in the position normally occupied by film during inspection by the X-ray absorption method and by using an appropriate phosphor to convert the incident X radiation into radiation of longer wavelength that can be measured by the phototube.

Negative pulses from the 931 anode are resistance-capacitance coupled to one grid of the 6SN7 tube. The amplified positive pulses are then coupled to the other triode section, which is operated as a cathode-follower impedance converter to supply a comparatively low-impedance network. The output of the cathode follower is rectified by a 6H6 diode, and the d-c output is used to trip a 2051 thyratron and relay to operate a marker and warning light when output reaches a certain value. The d-c current also operates a photoelectric recorder of the X-ray intensity.

In one application of the circuit, defective fuzes had part of their powder charge missing, and therefore allowed greater X-ray penetration than good fuzes would have allowed. The 2051 thyratron bias was so adjusted that sufficient signal would be obtained to trip it and to operate the relay whenever a defective fuze passed through the X-ray beam. Since the X-ray beam was masked off between fuzes, no X rays reached the detector circuit except through the fuze under inspection.

To provide a check on the proper functioning of the inspection equipment, every fourth fuze passing through the test position was known to be defective. (These known defective fuzes were left in their positions on the conveyer during the entire test run.) If the equipment failed to reject any of them, the test was immediately stopped and the cause of the failure eliminated.

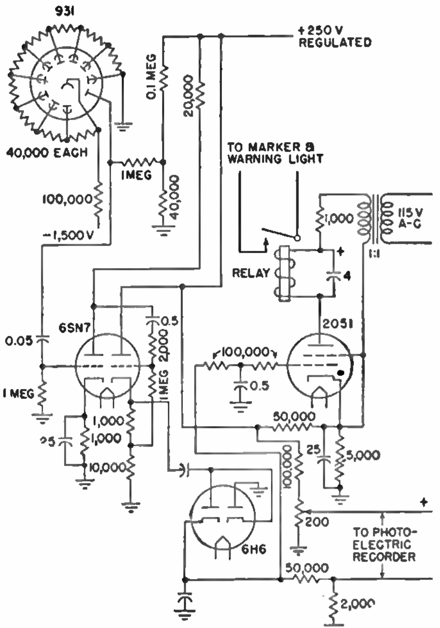

H. M. Smith, Phototube Sees X-rays, *Electronics*, November, 1946, p. 180; X-ray Inspection with Phosphors and Photoelectric Tubes, *Gen. Elec. Rev.*, March, 1945, p. 13.

Microdensitometer Circuit for Measuring Turbidity of Chemical Solutions

Phototubes, used in conjunction with a d-c amplifier in a null circuit where readings are obtained from a calibrated light wedge, comprise this electronic microdensitometer circuit that provides a rapid method of measuring the turbidity of tiny amounts of solutions and requires samples of only 1 cc in standard 75 by 10 mm chemical test tubes for any determination.

Two phototubes are employed in a balanced bridge circuit and readings are obtained by adjusting a light wedge, calibrated in percentages of illumination, transmission from 100 to zero, to balance the quantity of light absorbed by the unknown over the control specimen. The electronic circuit functions on the null-reading principle and is employed to show the balance point.

The two phototubes have maximum sensitivity in the red and infrared region. Both function through one light source; changes of intensity in illumination have the same effect on both tubes but no influence on the null reading. Voltage to the amplifier circuit and the phototubes is stabilized by a VR105 voltage-regulator tube. The instrument functions on the principle that a very minute change in light intensity falling on one phototube against that falling upon the other, after they have been adjusted previously for the null point, causes a change in electronic emission of one phototube. Accordingly, the grid of the electronic amplifier becomes either more or less negative than when at the null point, and the tube in turn causes the microammeter in the plate circuit to indicate a deflection.

A light wedge (decreasing the size of the light-transmitting window) is then manipulated to cause the microammeter to register the null reading again, returning the phototubes back to the same degrees of illumination and electron bombardment as in the first place. The amount of movement of the light wedge, which is necessary to return the instrument to the null point, is an exact measure of the quantity of light absorbed by the unknown sample.

Graphs are plotted, on semilogarithmic paper, of the light-wedge observations to be had from solutions of known density, and the unknown sample concentration is obtained by referring to the known graphic determination. With a calibration curve for any substance, it can be employed for computing the unknown sample. The light wedge cannot alter its calibration, but this is possible when using direct readings from phototube-meter instruments.

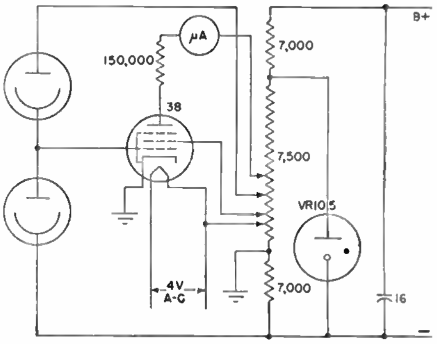

The degree of sensitivity can be controlled by varying the voltage impressed upon the phototubes, or on the plate and screen of the amplifier tube. Different ranges of sensitivity can be provided by varying the screen voltage from a tapped voltage divider with a multipole switch. The apparatus may be also used as a turbidimeter and abridged spectrophotometer.

S. R. Winters, Microdensitometer with D-C Amplifier, *Electronics*, July, 1944, p. 224.

Basic Thyratron Circuit for Single-unit Phototube Relay

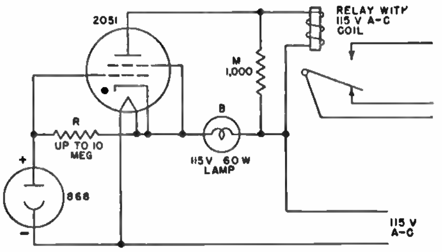

THIS circuit illustrates the extreme simplicity made possible by use of the gas tetrode, or thyratron, in a photoelectric relay system. The unit is assembled in a single case with light source and lens, and it uses a mirror to reflect the light beam back to the phototube. By using a projector lamp, a sufficiently concentrated light source is secured. The phototube and resistor *R* shunt the heater, the drop in which provides the necessary bias, and lamp *B* operates in series with the heater as the dropping resistor. Resistor *M* serves as a bypass for the inductive discharge of the relay coil during the nonconducting half cycle. This unit is so simple that practically nothing can go wrong, a distinct advantage in industrial applications.

Gilbert Smiley, Control Circuits for Industry, *Electronics*, January, 1941, p. 29.

Photoelectric Comparison Circuit for Calibrating Watt-hour Meters

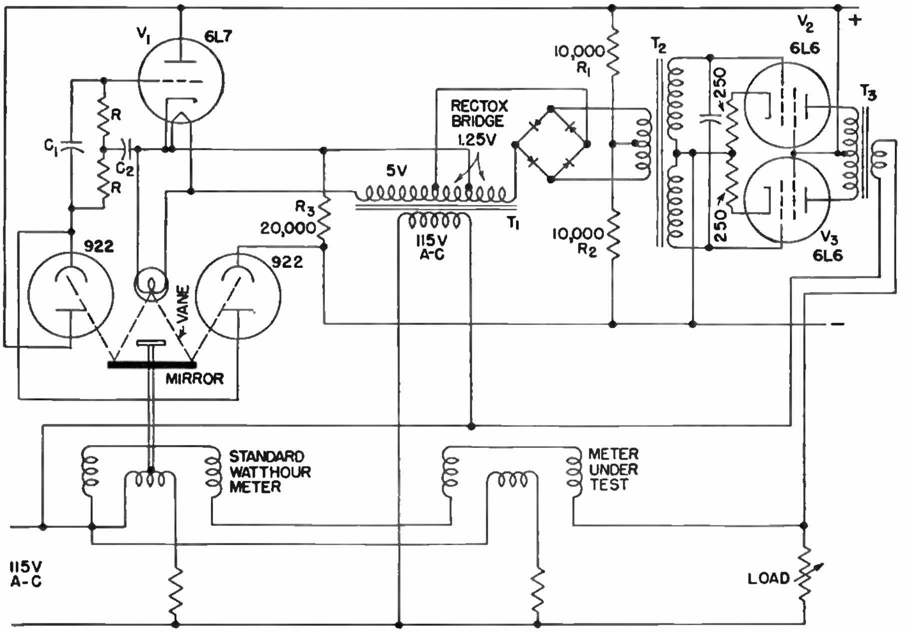

THIS electronic method of calibrating watt-hour meters employs a phototube and amplifying circuit for making comparisons between the meter under test and a precision instrument.

A network of resistors and capacitors is connected between the junction of the phototubes and the grid of tube V_1. The current flowing through this circuit sets up a potential difference that operates the remainder of the device.

Tube V_1 and the parts following it in the circuit produce a correction component for the variation in the load on the meters, the correction being proportional to the change in grid voltage of the tube from its normal value.

Since the meter illustrated is a wattmeter, the correction can be applied either to the voltage or to the current circuit. In practical use the voltage is kept relatively constant while the current is the variable element. By applying the correction in the current circuit, the correcting torque on the moving element can be made proportional to the correction. This means that the torque resulting from a correcting current will be dependent upon the product of the correcting current and the voltage and thus will be proportional to correcting current but independent of the load current value. This simplifies the operation considerably, as the gain of the amplifier does not need to be readjusted for every load change.

Tube V_1 is part of a bridge circuit made up of its cathode resistor R_3 and resistors R_1 and R_2. Normally the cathode is at about the same potential as the junction of R_1 and R_2, and the grid bias is at a value corresponding to a plate resistance of 20,000 ohms.

Any change in grid bias causes a direct current to flow from the center tap of the 2.5-volt winding of transformer T_1 to the primary center tap of T_2. This current unbalances the Rectox bridge through which it flows, and the a-c voltage is applied to T_2 primary. When the d-c input on the Rectox bridge reverses, this bridge (which has nonlinear resistance characteristics) becomes unbalanced in the opposite direction. The output of amplifying tubes V_2 and V_3 is made proportional to the grid voltage of V_1 by a choice of operating conditions, and output transformer T_3 steps up the alternating voltage to a value suitable to apply to the meter coils. The secondary side of this transformer is connected across the current coils of both the standard and the test meters, where an electromotive force of only a few volts is required. With this connection most of the correction-current component flows through the meter coils and but little through the load impedance.

The capacitor across the secondary winding of T_2 corrects the phase-angle error and improves the wave form. The cathode resistors for tubes V_2 and V_3 are not bypassed. This is to provide current feedback to ensure a good wave form in their current output under all conditions.

A change of current acts through C_1 to cause an overcorrection to be applied, and this is reduced as C_1 becomes charged. C_2 has comparatively high capacitance and accumulates the photoelectric current, building up a voltage which will correct for any slow drift of load current and also which will hold the average value constant while correcting the instantaneous swings in values as well. These values of C_1, C_2, and R_1 are critical and dependent upon the mechanical constants, spring strength, damping, and moment of inertia and the amplifier gain.

After an instrument is set to maintain a required load, the observer may concentrate his attention upon the test instrument. The use of two observers (one to read each meter) is eliminated.

B. E. Lenahan, Electronic Load Regulator for Meter Testing, *Electronics*, July, 1943, p. 116.

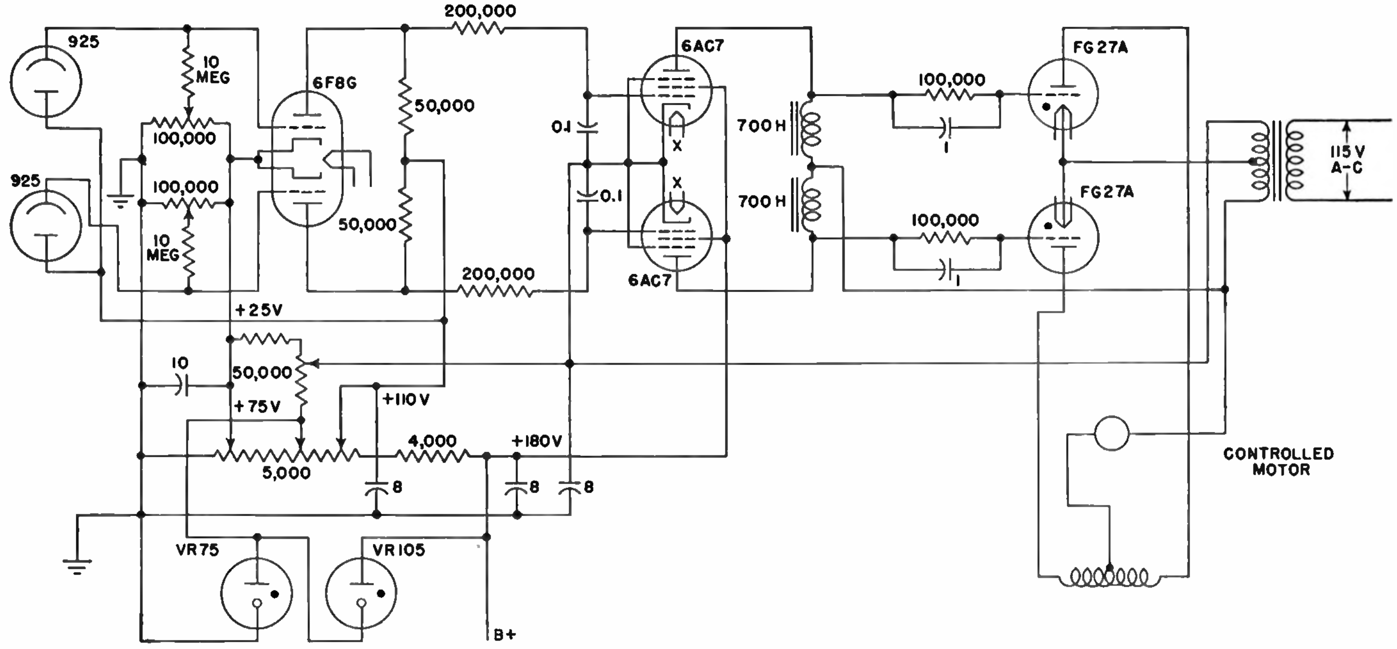

Photoelectric Circuit for Automatic Operation of Fiber-testing Balance

An automatic electronic balance circuit is used here to attain a continuous load-elongation record of single fibers of textiles at a constant rate of elongation, as well as a point-by-point record at a constant rate of loading. Phototubes provide sensitive automatic operation, and a kymograph makes possible autographic recording of the results of tests in rectangular coordinates.

One end of the fiber is attached to a platform that moves a dial gage to indicate the amount of elongation, and the other end of the fiber is attached to the left arm of a magnetically damped analytical balance equipped with a Chainomatic column by which a chain is lowered to one side of the balance at a constant rate to provide a constant rate of loading. The platform can be moved automatically by a constant-speed motor

A 21-cp lamp is housed in a box so that two beams are reflected by two metal mirrors downward, through two condensing lenses to additional mirrors placed symmetrically in front of the target to send the beams past the target to the phototubes. Automatic control over the position of the balance pointer is obtained with the help of the target, which when the system is in balance interrupts approximately half of each light beam.

The phototube control circuit consists of a conventional direct-coupled electronic amplifier circuit, and contains two thyratron tubes for control of the motor used to maintain continuous balance. Use of two phototubes makes the circuit independent of fluctuations of the light source. To protect the thyratron tubes from possible damages a time-delay circuit is included (not shown in the diagram).

The controlled motor, used to restore balance, is a series-wound universal type and contains split field windings to allow reversing action. Stopping of the motor is provided by limit switches, to prevent damage to the instrument.

A. M. Sookne and H. A. Rutherford, *J. Research Natl. Bur. Standards*, July, 1943, abstracted as Elongation Recorder for Single Textile Fibers, *Electronics*, October, 1943, p. 192.

Pentode Photoelectric Safety-control Circuit for Protection of Workers

The simple photoelectric relay circuit shown, operating directly from an a-c line, closes the relay when the light beam is interrupted. For protection of operators of dangerous equipment, such as punch presses or sewing machines, the light beam is directed across the danger zone and the relay is connected either directly or through additional relays to the machine being controlled. The stepdown transformer provides filament voltage for the pentode 6K6 amplifier tube used, as well as operating voltage for the lamp in the light source.

J. O. Kleber, Photoelectric Safety Control for Electric Sewing Machines, *Electronics*, August, 1943, p. 130.

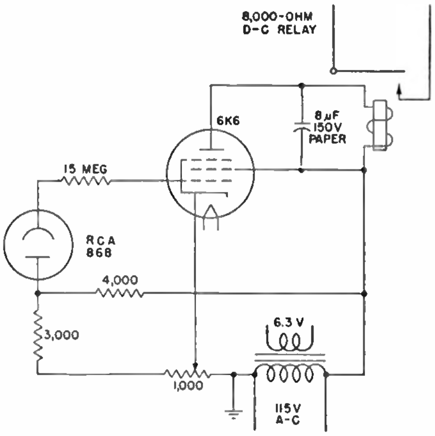

Multiplier Phototube and Voltage-regulated Power Supply for Measuring Dust in Air

A MULTIPLIER phototube connected to this a-c amplifier and voltage-regulated power supply can be used to measure continuously the quantity of light reflected by dust particles passing through an illuminated air duct in an air-conditioning system, as required for testing and rating air cleaners.

A mu-bridge type of regulator is used to ensure constancy of the phototube electrode voltages. The noise level in this type of phototube is proportional to its d-c output. This permits the use of an a-c amplifier in the measuring system, which is desirable because of its simplicity compared with an equally stable d-c amplifier.

The resistance-capacitance network associated with the microammeter has a sufficiently long time constant to allow the meter reading to be an average indication of the response of the phototube.

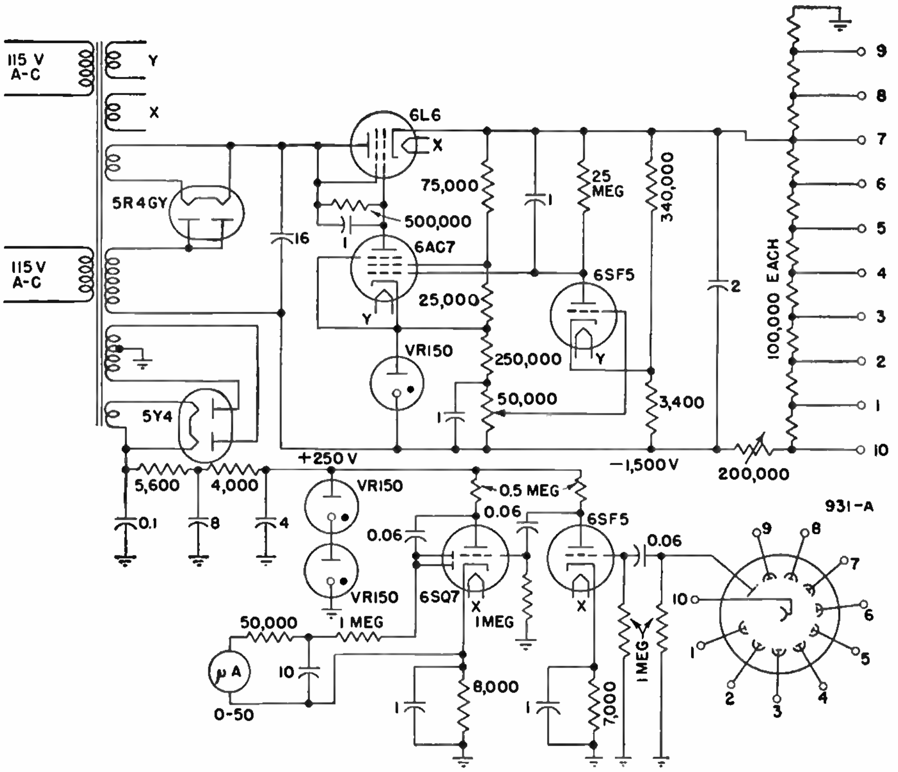

Guy F. Bennett and A. L. Free, Photoelectric Dust Meter, *Electronics*, December, 1946, p. 116.

Quick-acting, Slow-releasing A-C-operated Photoelectric Control Circuit

THIS circuit converts a short-duration pulse of light into an output current pulse having sufficient duration to operate a sluggish mechanical relay. With the connection shown, an instantaneous flash results in a rapid loss of potential across C_2 because of the current taken by the buffer stage. This loss of potential is gradually restored through R_3 over a period of several cycles, thereby prolonging the output current pulse in the desired manner. The circuit functions in a positive direction on received light.

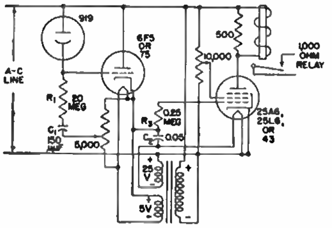

F. H. Shepard, Jr., Some Unconventional Vacuum Tube Applications, *RCA Rev.*, October, 1937, p. 149.

Comparator Type of Photoelectric Densitometer

THIS simple photoelectric densitometer circuit employs a type 927 phototube and a 6F5G triode amplifier to compare the density of a photographic negative with known densities of the various portions of a calibrated step wedge, to determine negative density by comparison rather than by a direct reading of a meter. Such variable factors as lamp blackening, amplifier-tube changes, and voltage variations over periods of time cannot introduce errors when this simple and quick comparison method is employed.

The light source consists of a small lamp having a condensing lens cast integral with the glass envelope, mounted directly above the measuring aperture over which the negative is placed, with the phototube immediately below the aperture. The lamp is operated from a battery to obtain constant illumination during measurement, with a separate switch to conserve battery life while keeping the amplifier tube at operating temperature. This is desirable because there is always some drift in a d-c amplifier until operating temperature is reached. The voltage doubler type of power supply is well regulated by the VR150 tube connected across a portion of the power-supply voltage divider. The milliammeter in the plate circuit of the amplifier tube gives readings inversely proportional to the amount of light reaching the phototube.

After a 5-minute warm-up, the potentiometer is adjusted to give a full-scale meter reading with the lamp off. This reading drops to about 5 per cent of the full-scale value when the lamp is turned on. The portion of the negative to be measured is placed over the aperture and the meter reading noted, after which a photographic step wedge of the desired range is inserted in place of the negative and is moved until the same meter reading is obtained. The density is then read directly on the portion of the step wedge that is over the aperture.

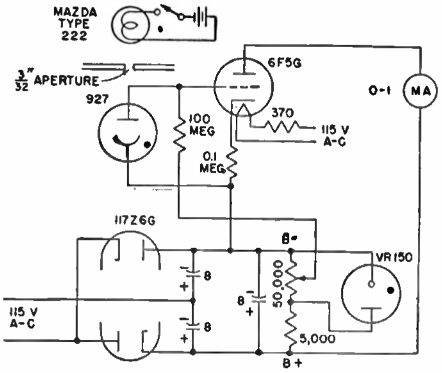

Carl C. Smith, A Photoelectric Densitometer, *Electronics*, December, 1942, p. 79.

Photoelectric Exposure Control Circuit for Photographic Use

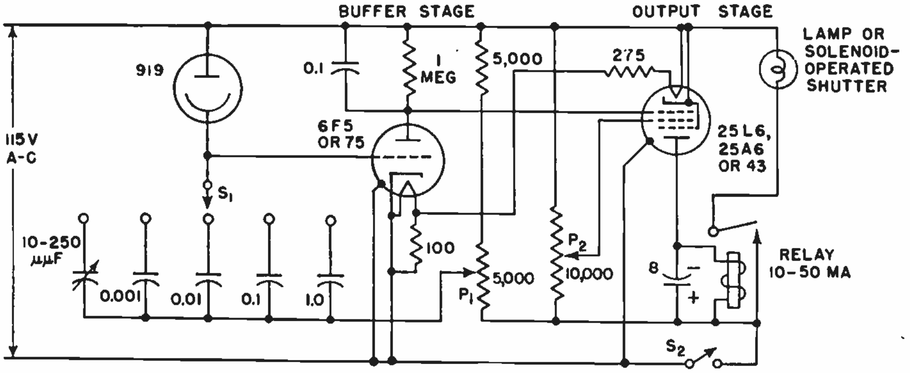

THIS circuit will actuate a solenoid, or relay, when the phototube has received a predetermined amount of light after switch S_2 has been closed. This action is independent of the time over which the light is received, provided that the time is greater than about half a second. For photographic applications the light can be reflected from or transmitted through a part or all of the plate, film, or paper whose exposure is being monitored.

When switch S_2 is open, the plate and screen voltages of the output tube are zero and the relay is deenergized. The cathode of the buffer stage is connected to one side of the a-c line, while the grid is connected to the other side of the line through one of the timing capacitors and a resistance of between 5,000 and 10,000 ohms. Due to the rectifying action between the grid and cathode of the buffer stage, the capacitor assumes a charge, the direct potential of which reaches a value approaching the peak of the a-c line voltage.

On closing switch S_2 the d-c voltage, or the major portion of this voltage, is removed from between the grid and cathode of the buffer stage, thus allowing the above-mentioned d-c potential on the grid to cut off the plate current. This in turn allows the voltage drop across the plate load of the buffer stage to drop to zero. As this drop across the buffer-stage plate load is both signal and bias for the output stage, and as the plate and screen voltages of the output tube are applied by closing switch S_2, the plate current of the output tube will rise to operate the output relay, or solenoid. This in turn lights the exposure lamp or opens the camera shutter.

After the charge across the timing capacitor is dissipated through the phototube to a low enough value so that the grid of the buffer stage permits the buffer stage to conduct plate current, a voltage will be developed across the buffer-stage plate load resistor of sufficient value to cut off the plate current of the output tube. This action releases the relay, or solenoid, and thereby turns off the exposure lamp or closes the camera shutter.

The current passed by a vacuum-type phototube is directly proportional to the intensity of the light received by the phototube, and is practically independent of the voltage across the tube. The quantity of light received is the product of intensity and time, and is in general a measure of the proper exposure. The quantity of electricity passed by the phototube is proportional to the product of its current and time; hence the quantity of electricity passed is a measure of the quantity of light received. As it takes a definite quantity of electricity to discharge a capacitor from one potential to another, the size of the capacitor and the voltage through which it has to be discharged can be used as a measure of the desired exposure. Judgment of the operator is still necessary to determine the setting of P_1, which compensates for the percentages of light and dark areas in the picture.

This circuit finds applications in all types of copy and picture work where time exposures are used, such as exposure of zinc plates in newspaper work, exposure in making microphotographs, in portrait work, in photostat work, and in printing.

F. H. Shepard, Jr., Some Unconventional Vacuum Tube Applications, *RCA Rev.*, October, 1937, p. 149.

Photoelectric Illumination Control Circuit for Street Lights

PREDETERMINED foot-candle levels of light near twilight and dawn actuate this combination photoelectric amplifier circuit and time-delay network to switch secondary circuits on and off. The operating point can be set at any light level between 1 and 10 foot-candles by varying the bias voltage on the first triode amplifier. Long tube life is ensured by keeping heater-cathode potentials below 100 volts. Time delay is provided to prevent intermittent operation of the lighting circuit by momentary changes in light, the delay being 20 seconds or more when the daylight level is high compared with the sensitivity setting of the control. When decreasing daylight level approaches this setting, however, the time delay diminishes. Just before the critical level at which operation takes place, any momentary interruption of light on the phototube will cause the relay to operate.

Due to the differential between the turn-on and the turn-off level, the light controlled by the switch will remain on after the interruption has passed. The reverse of this is true when the level of daylight increases and again approaches the critical sensitivity setting of the control, but from the opposite direction.

The phototube and amplifiers are actually half-wave rectifiers, conducting only when their anodes are positive. The inherent characteristics of uncompensated direct-coupled amplifiers, such as drift and instability, are of minor importance in this application. The operating period, when the control will respond to a certain light level, will occupy only several minutes out of any one day. At all other times when the light level is high, or below the operating point, the amplifiers are operating either at zero bias or well beyond cutoff.

The circuit has exceptional sensitivity. With the sensitivity control set at maximum, it requires a power input of only 2 microwatts at the grid of the 6SJ7 for operation. That is sufficient to control 500 milliwatts in the plate circuit of V_3, and represents a gain of 53.9 db.

On the assumption that incident light striking the phototube cathode is greater than 1 foot-candle (4 millilumens on cathode area), sufficient current will flow through R_1 to reduce the grid voltage of V_1 to zero. The 6SJ7 will now conduct

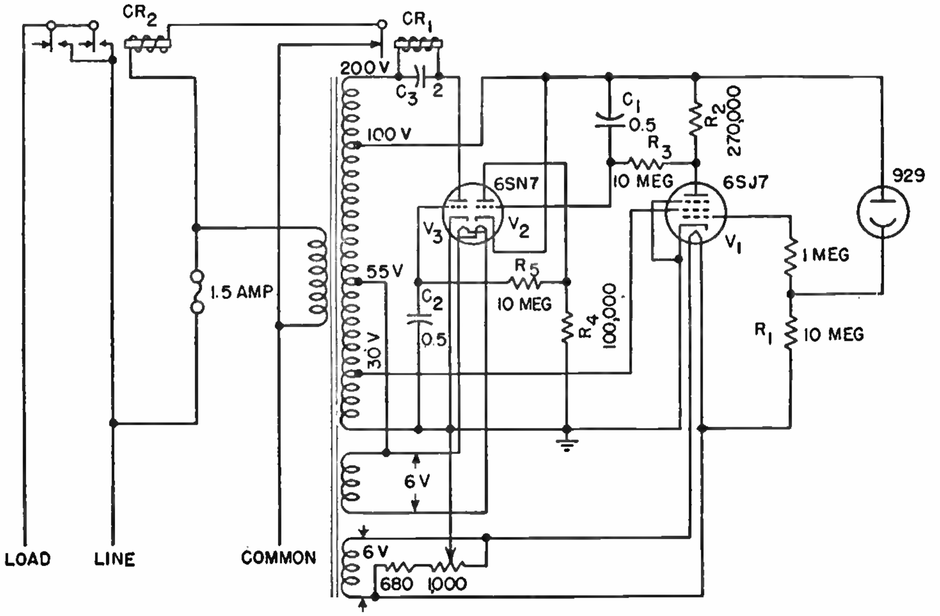

on every half cycle when the plate is positive. The voltage developed across load resistor R_2 will charge capacitor C_1 through R_3. When C_1 is charged to its maximum value (140 volts), V_1 needs only supply current, necessary to make up the losses, on a small portion of its conducting cycle. Grid current of the succeeding triode, flowing through R_2 and R_3, supplies the rest.

Variations of plate current due to changes of light at the phototube have no immediate effect on V_2 unless those changes are of a greater time constant than C_1 and R_2-R_3. The grid of V_2 is biased negative beyond cutoff under this condition. No voltage is developed across plate load resistor R_4.

The combination of C_2, R_4, and R_5 is another timing network, similar to that in the plate circuit of V_1. Capacitor C_2 in this timing network will be discharged when there is more than 1 foot-candle of light on the phototube. The grid of V_3, the last amplifier, is under this condition at zero bias. With 200 volts on the anode, it draws 10 milliamperes of plate current, which energizes the 5,000-ohm coil of relay CR_1. Capacitor C_3, across the relay coil, smooths out pulsating current.

Relay CR_1 acting as a pilot relay, controls the load indirectly by switching relay CR_2. Because this relay is energized when there is light on the phototube, failure of the tubes or the transformer will be indicated by the lamp load burning continually during daylight hours.

When the light level falls below a predetermined value, the voltage drop across phototube load resistor R_1 is reduced and the fixed bias voltage takes control of the V_1 grid. Exactly the opposite of what was explained above now takes place. With the flow of 6SJ7 plate current cut off, the timing network begins to discharge. The potential across C_1 must decay below 15 volts before V_2 will start conducting. When the power in the relay coil of CR_1 drops below 45 milliwatts, the contacts close and energize CR_2.

Charles E. Marshall, Photoelectric Street Lighting Control, *Electronics*, September, 1946, p. 134.

Linear Densitometer Employing Bridge-type Photoelectric Amplifier Circuit

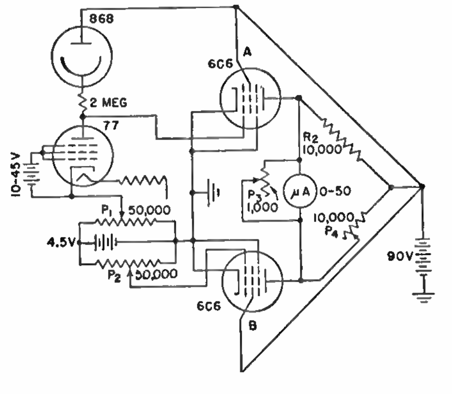

This bridge-type photoelectric amplifier circuit, for stable indication of light flux in a linear photographic densitometer, uses two 6C6 pentodes as the arms of a Wheatstone bridge, with a microammeter connected from plate to plate of these tubes. This meter is shunted by a variable resistance that permits adjustment of the meter to read full scale for any density desired. A resistance in the fourth arm of the bridge can be varied to produce zero current for zero density and linear indication.

The phototube is illuminated by the light of a 32-candlepower 6- to 8-volt automobile headlight bulb through an aperture 0.125 inch in diameter. A resistance of 2 megohms is in series with the anode and is connected to the plate of the 77 tube, which is connected to the grid of amplifier tube *A*. The three grids of the 77 tube are connected to a potential of 10 to 45 volts, the exact voltage depending on the peculiarities of the particular 77 used.

The cathode of the 77 is connected to a potentiometer P_1 (50,000 ohms) that is used to adjust the bias of tube *A*. This potentiometer is set so that operation is on the linear part of the characteristic of this tube. After this is once adjusted, it need not be changed again. Potentiometer P_2 (also 50,000 ohms) serves as a rough adjustment to equalize the plate currents. P_4 can be used as a fine adjustment. Tube *B* serves the function of balancing the current of tube *A*.

To adjust the instrument, insert an ammeter in series with the plate of *A*. Adjust P_1 so that full light produces a plate current so high that it is almost at the top of the characteristic curve of *A*. (This operation is facilitated by removing the 77 and inserting a wire shorting plate to cathode.) Replace the 77 and adjust the bias for the selected value of plate current. The voltage drop across the 77 is between 1 and 3 volts.

When operating the instrument, P_4 should first be made equal to R_2. Adjust P_2 to give approximately zero current (P_3 set to give maximum sensitivity). Readjust P_2 and P_4 until the meter is exactly zero. Decrease the light until it is the same as it would be if it passed through an area whose density is the greatest to be measured. Adjust shunt P_3 until the meter reads full scale for this light value.

Care must be taken to light the filament of the 77 tube before the grids of this tube are connected to a potential source. Failure to do this may result in erratic action.

John A. Tiedman, A Linear Densitometer, *Electronics*, March, 1941, p. 48.

Infrared-sensitive Photoelectric Relay for Automatic Water-spray Control

When hot ore on a conveyer passes under the three infrared-sensitive phototubes of this photoelectric-relay circuit, the relay system operates a 115-volt solenoid water valve to turn on a spray of cooling water. The spray head is located far enough behind the phototube assembly to compensate for the time lag in the relay circuit. The sensitive relay in the tube circuit has a drop out at 80 per cent of its takeup value, which provides satisfactory spray regulation. The equipment may be adjusted to operate at any desired radiant heat by adjustment of the grid-bias control on the vacuum tube.

Three phototubes sensitive to infrared rays, connected in parallel and spaced inside a length of 2½-inch pipe cut away on the underside to allow entry of radiation, constitute the heat-sensitive element. The tubes should be enclosed in a Pyrex glass cylinder and a current of air should be blown past them to prevent overheating by the hot material directly beneath.

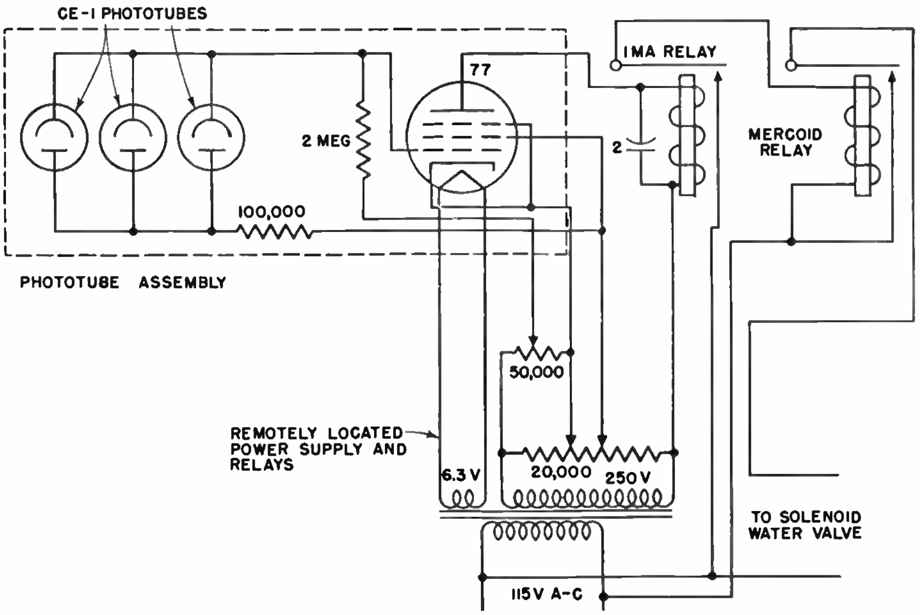

In adjusting the equipment for operation, the controllable grid bias on the type 77 tube is increased until the spray comes on, and then, while no hot material is immediately beneath the phototube assembly, the grid bias is reduced to the point where the spray shuts off.

Philip Ewald, Photoelectric Cooling Control, *Electronics*, November, 1941, p. 55.

Photoelectric Exposure-timing Circuit for Printing from Color Transparencies

A phototube in combination with an electronic timing circuit here determines electronically during exposure itself the correct time required to print any given color transparency. A small part of the light passing through the transparency is directed onto a type 929 phototube by means of a prism and focusing lens, and the integrated phototube current dissipates a voltage charge across capacitor C_1 in series with the phototube. The time interval for dissipating this charge depends upon the average density of the transparency and upon the value of the charging voltage applied to the capacitor prior to the start of the timing cycle. The correct charging voltage for each transparency is determined electronically beforehand in an electronic coder that measures the ratio of the density of the most important portion of the transparency to the average over-all density.

In the circuit, all relays are shown deenergized, as they are when the line switch is open. Closing this switch energizes the full-wave power pack and the heater circuits of the 2050 thyratron and the 6F5G tube in the phototube system, but no plate voltages are applied because the delay relay is still open. After a delay of about 20 seconds the thermal delay switch closes and operates the delay relay, thereby completing the plate-supply circuit. This relay also has its own holding contacts, and an additional pair of contacts to disconnect the thermal switch.

On standby (in between exposures), the starting switch is closed and the 2050 thyratron is conducting, so that relays P_1 and P_2 are energized, the shutter is closed, and capacitor C_1 is being charged through the series resistance determined by the coder to give the correct charging voltage for the next transparency.

When an exposure is to be made, the starting switch is opened momentarily. This opens the two relays, thereby opening the shutter and isolating the phototube circuit from the charging source, and at the same time altering the 2050 bias so that it becomes nonconducting and the relays cannot reclose when the starting switch drops back to its closed position. Capacitor C_1 now discharges through the phototube at a rate proportional to illumination and the initial charging voltage until C_1 has discharged to the point where the 2050 again becomes conducting. Now the relays pull in, closing the shutter to terminate the exposure, advancing the paper one step, and recharging C_1 in readiness for the next exposure.

The 6F5G tube in the timing circuit is merely a resistance transformer, since it transfers its signal from the high-resistance load of the phototube to the comparatively low-resistance grid circuit of the 2050 tube. Grid emission is reduced by inserting 15 ohms in the heater circuit of the 6F5G, and instead of operating the anode at a low potential, which is commonly done in buffer stages, the anodes of both the 6F5G and 929 tubes are operated at 250 volts to acquire the necessary sensitivity. Over long test periods it has been found that stable characteristics can be maintained even though the anode voltage of the 929 is made as high as 250 volts, provided that the 6F5G anode is operated at the same potential as the 929. A VR150 tube regulates only that portion of the circuit involved in the charging voltage operation.

It is necessary to be able to change the time integral of the circuit for a given amount of light received by the phototube to compensate for variations in emulsion speeds and processing variables. This is accomplished by a selector switch that is used to vary the level of the charging voltages applied on C_1. For example

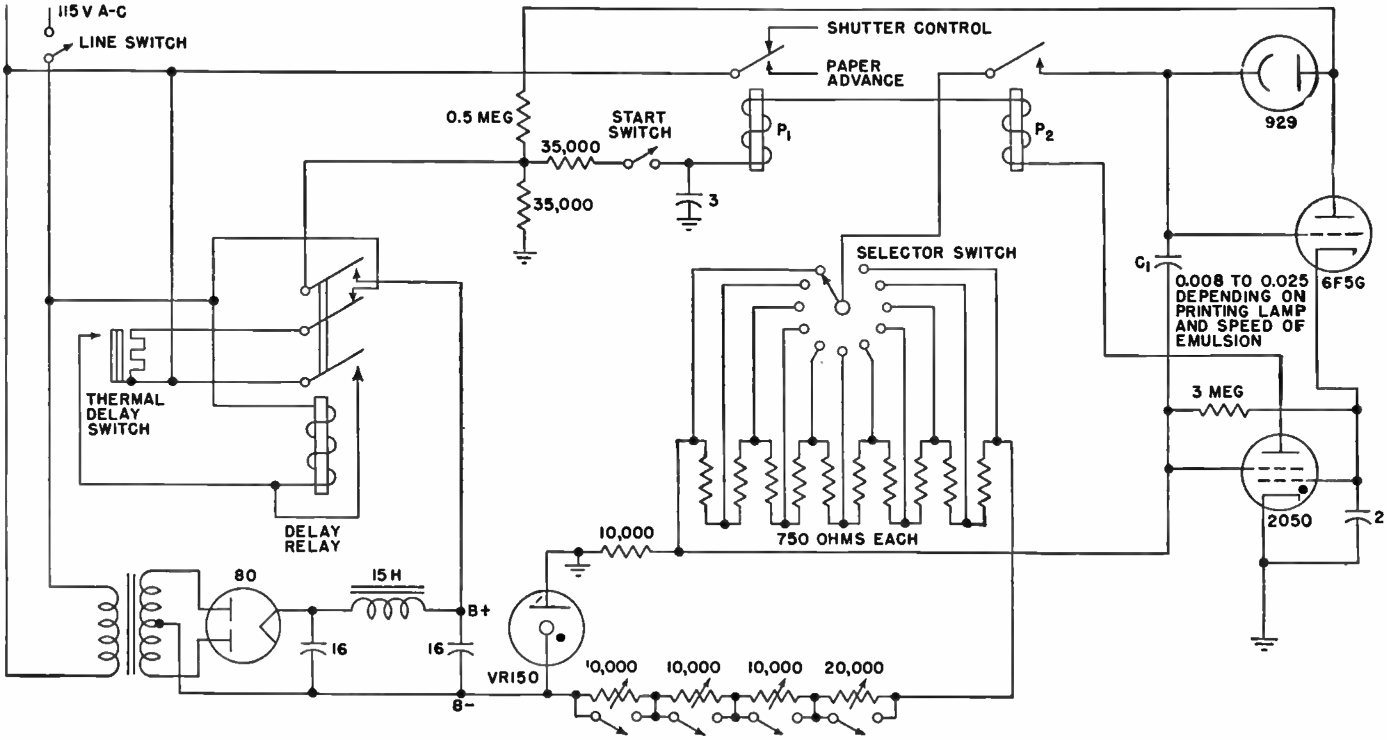

when a new emulsion is to be adopted, a short test roll is exposed, using a standard transparency, at all 11 positions of the selector switch. Upon development, the proper exposure can be selected, and the printer set at that particular tap. If, during continued use of the emulsion, there is a tendency for prints to be lighter or darker than normal, the switch is moved to a new position according to requirements. The effective change in print density in changing from one switch position to the next is made very gradual to permit delicate adjustments.

The value of C_1 is chosen to give an exposure time for an average normal transparency that is considered convenient for operation. Different rheostats are switched into the B− lead to adjust exposure times on the minus or plus side of normal. The spread in effective exposure change from normal is established by adjusting the rheostats. A $\sqrt{2}$ change in capacitor charging time for each step has been found very satisfactory.

The timing cycle is started by opening a switch because the circuit is designed for d-c operation and normal changes in grid bias cannot cause a thyratron to stop conducting in a d-c circuit. Therefore the only satisfactory method of opening the relays to start an exposure is by opening the anode circuit with the starting switch.

J. Robins and L. E. Varden, Photoelectric Controls for Color Printing, *Electronics*, June, 1946, p. 110.

Spectrograph Exposure Control Circuit Using Phototube and Grid-glow Tube

Use of this photoelectric control circuit with a grating spectrograph ensures uniform duplicate exposure of film despite variations in the arc source. The phototube unit is located near the slit of the spectrograph and within the spectrograph enclosure. Light from the arc source passes through the slit to the mirror and then to the grating, forming spectrum lines on the plate holder and giving a central image.

Incident light received by the phototube is reflected from the surface of a polished aluminum rotating sector located between the slit and the mirror within the spectrograph enclosure. The sector is adjustable for long or short exposures, depending upon the nature of the analysis. Thus the light received by the phototube will be actually only a cross section of that exposing the photographic plate. If the sector is rotated at a reasonable speed (about 900 rpm), the light received by the phototube will be representative of that received by the spectrograph plate.

In operation, the phototube converts the incident light into electric energy and charges a capacitor C_B, at a rate proportional to the intensity of the incident radiation, at the same time discharging C_A. Capacitors C_A and C_B, are the partial capacitances of VT_1 and VT_2. At a particular grid potential predetermined by the voltage on the plate of VT_2, the grid-glow tube fires, registering one integrated interval, and reestablishes the system to its initial conditions. This process is repeated many times for a complete exposure, thus giving an integrated result. The accuracy is partly dependent upon the size of the increments. The dial setting determines the number of these increments. A ratchet wheel having many teeth is employed to position the dial; it sums up the increments and thus becomes the integrator.

The over-all unit contains a rectifier to supply the necessary d-c voltages for the phototube and the grid-glow tube. The sample to be analyzed is placed in the cavity of the lower arc electrode (pure carbon), and an arc is established between the two electrodes. This causes relay RL_1 to operate, completing the circuit to the grid-glow tube. Relay RL_1 ensures that the indicator would not operate should the arc fail. Reestablishment of the arc restores operation. This provision also permits the exposure to be interrupted if desired without appreciable error because of slight leakages that may exist.

After each successive charge-up of capacitance C_B, VT_2 fires, causing the relay RL_2 to operate and actuating solenoid RL_3, which ratchets the dial one

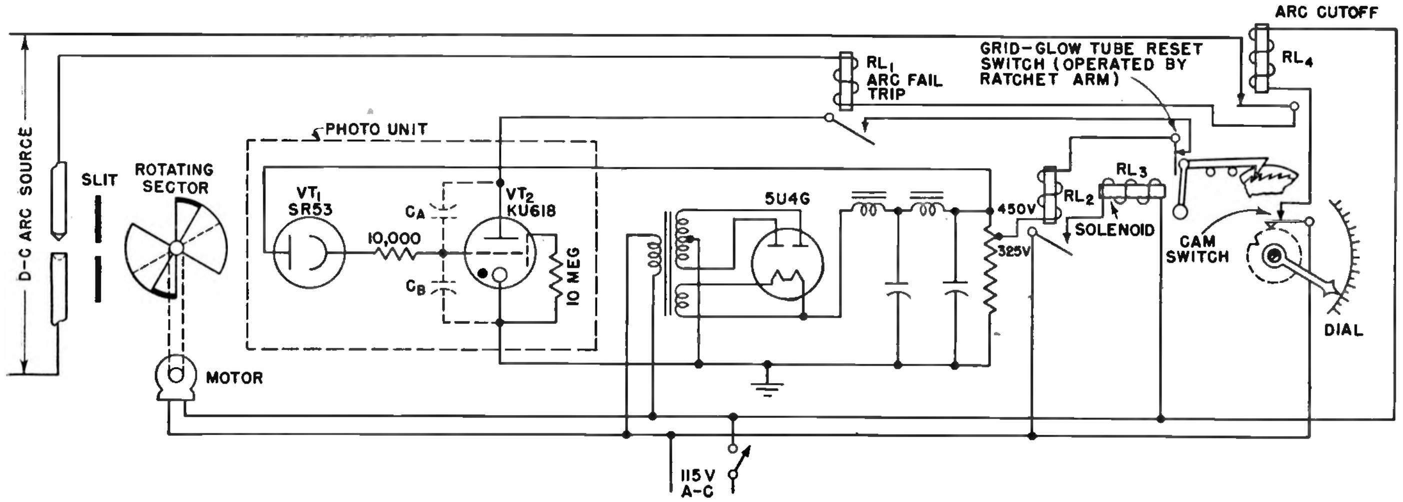

increment and resets the grid-glow tube by opening its plate circuit for an instant by means of the switch located near the solenoid arm. After many such cycles of operation are completed, a cam switch opens and releases the arc cutoff relay *RL*₄, thus interrupting the arc circuit. This arc cutoff relay extinguishes the arc when the desired exposure or end point is obtained. The desired length of exposure is determined by the position of the cam switch, which is preset by moving the indicator arm about the indicator scale. Once the arc is established for any setting of the dial, the operation is automatic.

Certain precautions must be taken to eliminate as far as possible any leakage paths present across the phototube leads. Removal of the base from the phototube and the grid-glow tube is recommended. The photo unit must be mounted on a base of good dielectric material.

J. R. Cosby, Spectrograph Exposure Control, *Electronics*, April, 1946, p. 123.

Photoelectric Circuit for Checking Timing of Photoflash Synchronizers on Cameras

THIS circuit was designed to indicate quickly variations in the timing of photoflash synchronizers, *i.e.*, the interval between closure of the synchronizer switch (with consequent rapid attainment of peak flashlamp brilliancy) and opening of the camera shutter.

Flashlamps in synchronizers under test appeared to require the shutter to open in 20 milliseconds. The range covered by the photoflash synchronizer tester is therefore from 10 to 45 milliseconds.

Operation is accomplished by two gas tetrodes that control the charging of a capacitor in accordance with the time interval to be measured. The photoflash synchronizer under test is connected across R_1 in such fashion that the voltage of the battery within the synchronizer appears across this resistor as soon as the synchronizer switch is closed, ionizing the 2051 at the left of the diagram and starting the capacitor charge cycle. (This connection is facilitated by the fact that most commercial synchronizers have extra sockets for attachment of additional photoflash lamps. One of these may be conveniently connected across R_1.)

A light source, such as a 6 to 8-volt 21-candlepower automobile-headlight lamp contained within a case, is mounted so that illumination from it impinges upon the 917 phototube through a magnifier. The camera shutter, with synchronizer-shutter actuator attached, is interposed between light source and phototube. When the shutter opens, permitting light to fall on the phototube, current flows through R_2 and the voltage developed across this resistor trips the second 2051, extinguishing the first 2051 by virtue of the virtual short circuit across R_3 and stopping the capacitor charge cycle.

The voltage across C_1 is immediately read by rotating switch *SW* one step clockwise, which connects it to the input of a degenerative vacuum-tube voltmeter calibrated directly in milliseconds. After reading the time interval, switch *SW* is moved one more step clockwise to discharge C_1 and is then returned to the original, or charge, position after pausing for an instant in the central, or read, position to note whether the meter returns fully to the index mark denoting a completely discharged capacitor. The pushbutton is then depressed, opening the anode circuit of the second gas tetrode and permitting its grid to regain control. The device is now ready for another time-interval measurement.

Two initial adjustments are required. The first of these affects the grid bias on the first tetrode, actuated by battery voltage from the synchronizer. At the plate voltage employed, this tube will trip when its grid voltage drops below −1.35 volts. A normal grid bias of −1.8 volts gives reliable operation. With such bias 0.5 volt is required from the synchronizer battery and any value greater than this will serve equally well. Bias is readily adjusted by connecting a 1,000-ohm per volt meter between a sync terminal and ground and adjusting potentimeter R_4.

The second adjustment pertains to the bias on the gas tube controlled by the phototube. A satisfactory setting is one that causes the tube to trip when the camera shutter is three-quarters open. To effect this adjustment, the testing device, light source, and shutter are arranged in the respective positions that they are to occupy during subsequent tests. The shutter is set at time and opened. The iris diaphragm is then stopped down 1½ stops from the fully open position; *i.e.*, an f/4.5 lens is adjusted midway between f/5.6 and f/8. The pushbutton is momentarily depressed and then, viewing the gas tetrode controlled by the phototube through the case grille, is advanced slowly until ionization occurs. The device is then ready for use.

The degenerative type of vacuum-tube voltmeter is unaffected by normal variations between 6C5G tubes. There is little danger of damaging the instrument in its cathode circuit through improper manipulation, for the maximum current that can flow through it is limited to 1.2 ma.

If good regulation is to be obtained, the instantaneous current required from the power pack should never exceed a value that will reduce the VR105 current below 5 ma. The various loads have been worked out accordingly. It is desirable to have the capacitance of C_1 large, so that the effects of leakage do not reduce its voltage rapidly (the capacitor selected should, of course, embody lowest possible leakage in its design). On the other hand, if the capacitance is excessive, it will be necessary to use a lower value of resistance at R_3 to arrive at the same charging voltage in the same time interval. There is then danger, because of the increased current required from the power pack, of the voltage-regulator tube dropping out.

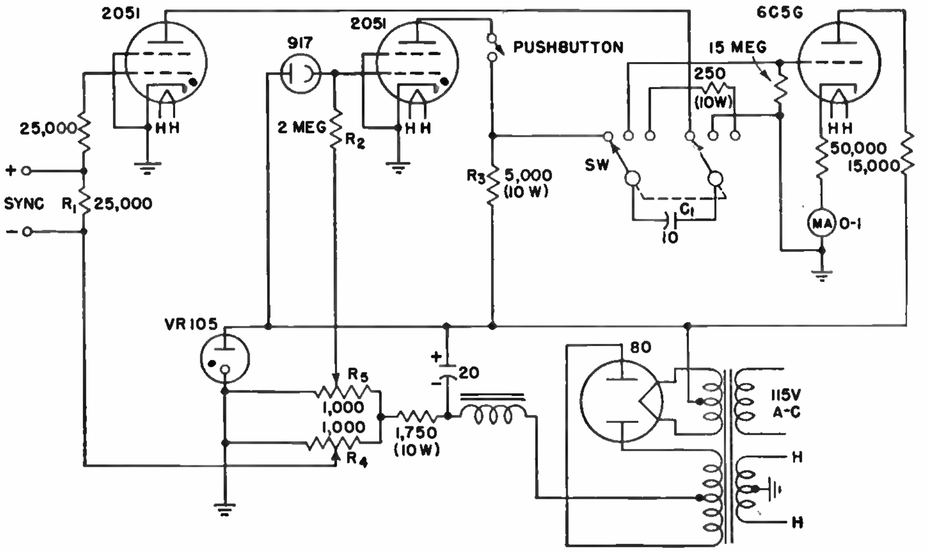

The maximum voltage to which the capacitor is kept low with respect to the applied voltage in order to operate on the steep portion of the normal capacitor charging curve.

P. A. Marsal, Photoflash Synchronizer Tester, *Electronics*, January, 1942, p. 34.

Sensitive Photoelectric Light-balance Indicator

For an accurate indication of balance between two amounts of light, the circuit given here is of value. With phototube illumination as low as 0.0001 lumen it is capable of indicating a light unbalance of less than 0.25 per cent, and for more illumination the accuracy of balance is still better. This performance is all the more remarkable considering that it is done by using the unregulated a-c power line directly for a power supply.

The circuit uses a 6E5 electron-ray tube as the balance indicator, a 38 as an a-c-operated buffer stage and electrometer, and a 6H6 as a rectifier to supply direct current to the 917 and 919 phototubes. One phototube acts as the high-impedance load for the other, so that relatively high voltage outputs are available, even for very small percentage variations of light. The high-impedance output of the phototube bridge circuit is fed directly to the grid of the 38. Because the cathode of the 919, the anode of the 917, and the grid of the 38 come out of the tops of the tubes, the connecting wires touch nothing but tube caps, and the tubes can be coated with a suitable nonhygroscopic wax, such as white ceresin wax, to reduce to a minimum all external leakages. Low leakage is essential when measuring small amounts of light.

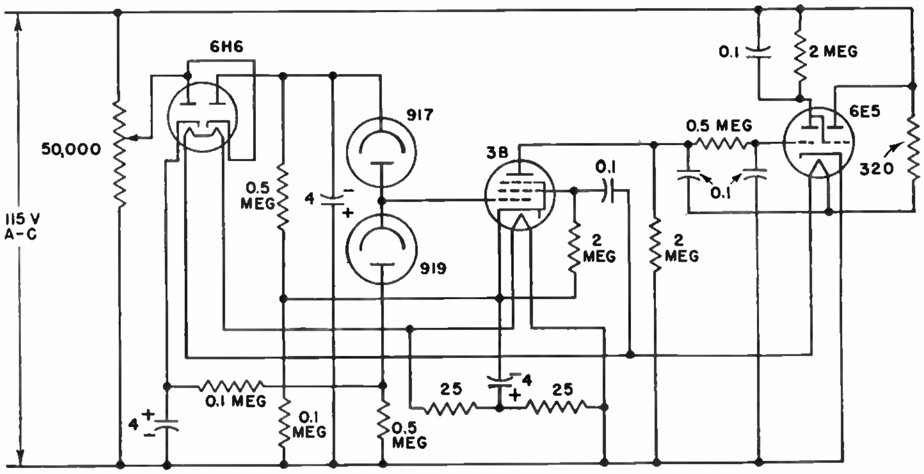

The type 38 acts on the alternating voltage supplied to its plate and screen in such a manner that the average direct potential built up on its plate is negative, and it is of such magnitude that it can be used as bias and signal to the grid of the 6E5 indicator tube. As a means of increasing the input resistance of the type 38, the heater is operated at reduced voltage, the screen at about 10 volts, and the plate at about 18 volts. To avoid the effects of emission from the heater to the grid, the heater is operated at a potential that is at all times positive with respect to the control grid.

In actual use a system of mirrors, or reflecting surfaces, is arranged to take the light from a common source and to pass it through or reflect it from the surface of the sample under test. A calibrated shutter, a pair of rotatable calibrated polarized disks, or a calibrated runway for the light source can be used to determine accurately the change in balance intensity as various samples are placed between the light source and one of the phototubes.

With a suitable light source, this circuit can be used for color matching, turbidity measurements, reflectance measurements, and absorption analysis of solutions. With a source of monochromatic light of the desired wavelength, the circuit has been successfully used for accurately determining the sugar concentration in beverages, the concentration of various sirups and flavorings, and the vitamin concentrations of vitamin-bearing oils.

F. H. Shepard, Jr., Some Unconventional Vacuum Tube Applications, *RCA Rev.* October, 1937, p. 149.

Ultraviolet Photometer for Gas Detection, Analysis, and Measurement

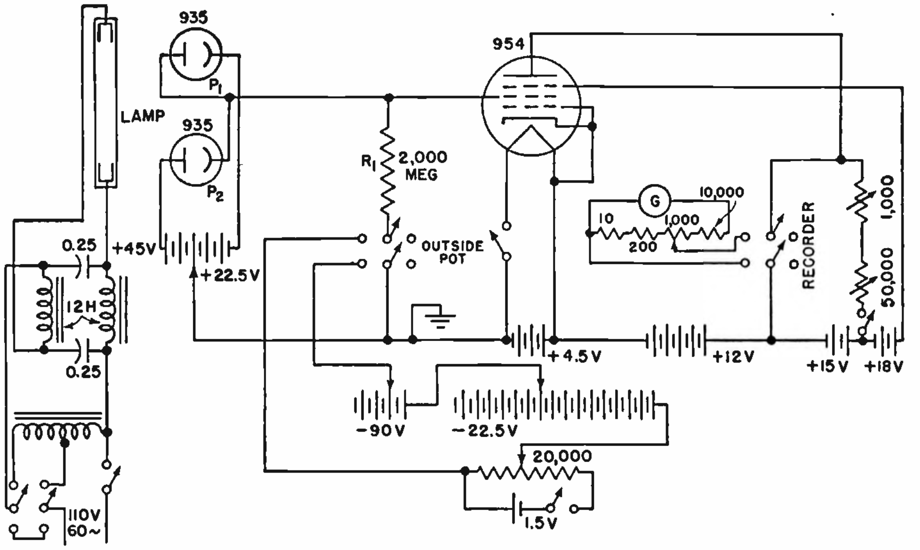

THIS automatic recording ultraviolet photometer circuit, based on the property of certain gases to absorb ultraviolet light strongly, can be used to detect two or three parts per million of the gas and to measure accurately greater concentrations. Measurement is accomplished by introducing a balanced double-phototube arrangement with null-point measuring circuit. Provision is made for making an absolute measurement of the intensity of the ultraviolet radiation from a 5-watt germicidal lamp that gives 95 per cent of its radiation at 2537A.

The principle of operation of the instrument is to balance by means of camera diaphragms the light being received by the two phototubes P_1 and P_2, until the emf drop across the resistance R_1 is zero, and then to allow the air containing the toxic gas to flow through an absorption cell. Absorption of some of the ultraviolet light by the toxic gas upsets the balance, producing an emf drop across R_1 that can be measured. Calibration of the instrument with known gas concentrations provides an accurate quantitative foundation for the work. The recorder is a photoelectric recording microammeter.

Irving M. Klotz and Malcolm Dole, Automatic Recording Ultraviolet Photometer, *Electronics*, February, 1947, p. 140.

Logarithmic Photometer Circuit Using Multiplier Phototube

THIS multiplier phototube circuit provides logarithmic response to light intensity, as required for measuring film density in a direct-reading densitometer, or for measuring concentration of chemicals by monochromatic optical methods. Characteristics of this electronic photometer include high sensitivity, good stability, direct-reading operation as distinct from manual or automatically actuated null-balance types, and logarithmic response over an intensity range of at least 1,000 to 1.

Theoretically, sensitivity of electron multiplier tubes depends on applied dynode voltage. The circuit automatically and instantly maintains constant phototube anode current in the presence of variations in incident light intensity in order to achieve the logarithmic relationship between light intensity and voltage. As the light intensity falling on the photosurface is increased, the anode current tends to increase also. However, as the anode current increases, the grid of the control tube is driven to a more negative potential. Consequently the bleeder current is reduced, the dynode voltage is reduced in proportion, and the sensitivity of the tube as a whole decreases.

In the limiting case wherein the control tube has a high amplification factor (virtually infinite), the control-grid voltage (and therefore the anode current through the grid resistor) is essentially constant. Under ideal conditions, anode impedance of multiplier tubes is relatively high so that ordinary variations in anode-dynode No. 9 voltage have small effect on the light intensity versus bleeder current relationship.

Use of two corrective shunts, each comprising a selenium rectifier in series with a resistor, gives linearity that is accurate within 0.02 log F over a log F range of 0 to 3.

The power supply consists of a conventional power transformer whose high-voltage secondary winding energizes two type 816 hot-cathode high-voltage gaseous rectifiers in a full-wave voltage-doubler circuit. Necessary voltage isolation of the heaters is obtained by using the 5-volt winding plus a voltage-dropping resistor as a source for one of the filaments and the 2.5-volt winding directly for the other.

The 100,000-ohm bleeder resistors and double-section 3-μf filter capacitors provide a d-c source of 1,200 volts with a ripple component of less than 5 per cent. A relay in the rectifier circuit for the screen-voltage supply closes the high-voltage a-c circuit to the 816 tubes only after all the filaments are heated.

A stabilized d-c supply isolated from the plate-cathode circuit of the 807 provides screen and control-grid-bias voltages and voltage for the compensating circuit. This additional supply was conveniently obtained by rectifying the 117-volt a-c power supply. By using a vacuum-type rectifier and a relay in the bleeder circuit, automatic time delay was obtained for closing the 816 high-voltage plate-supply circuit. A VR150 gas stabilizer tube maintains (in combination with the NE32 tube) the constant screen and control-grid supply voltages.

A bucking current for the output meter is derived from the positive portion of the screen-voltage supply. The purpose of the bucking circuit, which gives a result equivalent to that of a suppressed-zero meter, is to permit the entire scale of the meter to be used for only those dynode voltage values of interest. Zero meter current corresponds to about 30 volts per stage on the multiplier tube.

The response of the circuit to changes in illumination is instantaneous. There is no tendency to oscillate, because of the high percentage of negative feedback, and no shunt capacitor is needed in the 807 grid circuit. The instrument is eminently

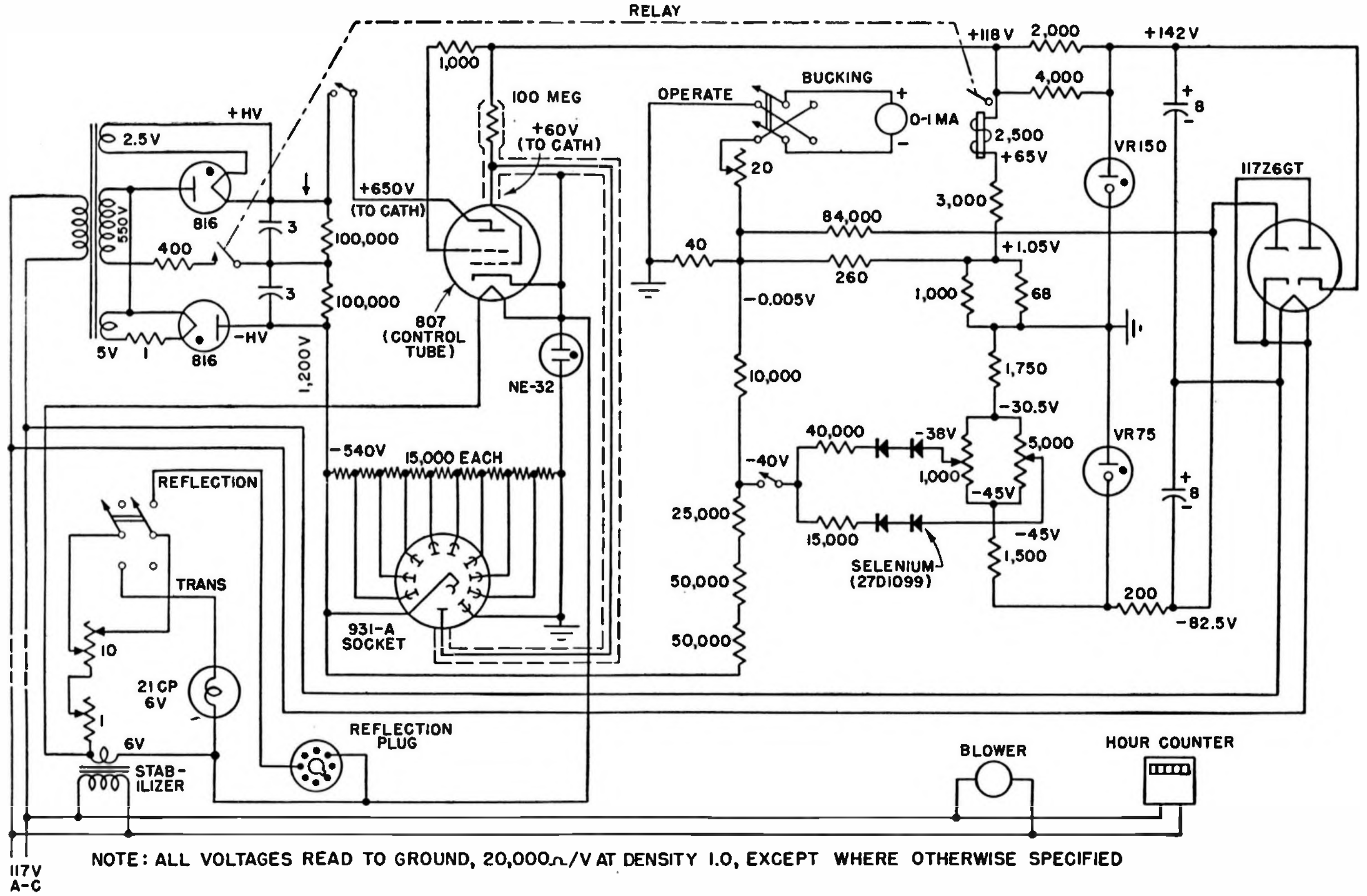

suited for use in conjunction with spark-recording instruments because of its insensitivity to intense high-frequency radiation fields. The stability to changes in supply voltage is such that over a voltage range of 100 to 130 volts there is negligible variation in meter reading except at the highest bleeder currents which occur at highest densities.

Monroe H. Sweet, Logarithmic Photometer, *Electronics*, November, 1946, p. 105.

High-sensitivity Phototube Circuit for Illumination Measurements

By using a pentode as the high-resistance load for a phototube, the percentage change in voltage across the phototube is made greater than the percentage change in light. The sensitivity of the circuit is thereby made considerably greater than that of the conventional circuit, without requiring unusual precautions against leakage.

A phototube of the vacuum type is connected in series with the plate of the pentode, the grid of which is negatively biased but not to the point of cutoff. With the phototube dark, plate current is zero. If the phototube is illuminated with light of unvarying intensity, a steady current will be established in the circuit.

An increase in light intensity will cause an increase in current, reducing the voltage drop across the phototube. A comparatively small percentage change in light intensity will produce a large percentage change in the value of this drop, which changes the grid potential of the triode amplifier tube. By so doing, a small percentage change in light intensity may be made to produce a large percentage change in the plate current of the amplifier.

It is desirable to apply the phototube voltage drop to the grid circuit of the 6C5 in such a way that an increase in light will cause an increase in its plate current. In so doing it will usually be found that a positive biasing battery *E* will be needed to produce partial neutralization of the phototube drop and to prevent the 6C5 from being biased too far beyond cutoff when the phototube is dark. It is then possible to adjust the bias so that, for an initial light intensity, the biasing voltage is just right to produce cutoff.

This circuit will prove valuable for many phototube relay and measurement applications that have heretofore required multistage amplification, with its attendant difficulties, to obtain suitable sensitivity. Satisfactory half-wave operation may be expected from 60-cycle voltages on the various supply terminals if careful attention is paid to instantaneous polarities. This circuit does not work well for initial light intensities below about 1 foot-candle.

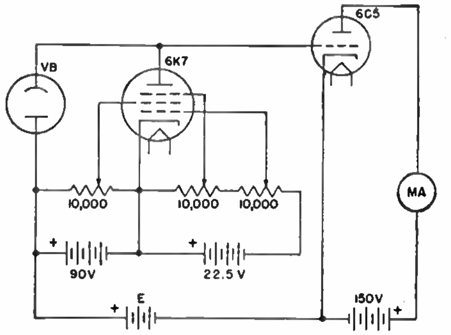

H. S. Bull and J. M. Lafferty, A High-sensitivity Phototube Circuit, *Electronics*, November, 1940, p. 31.

Balanced Phototube Circuit for Precise Comparisons of Illumination Intensity

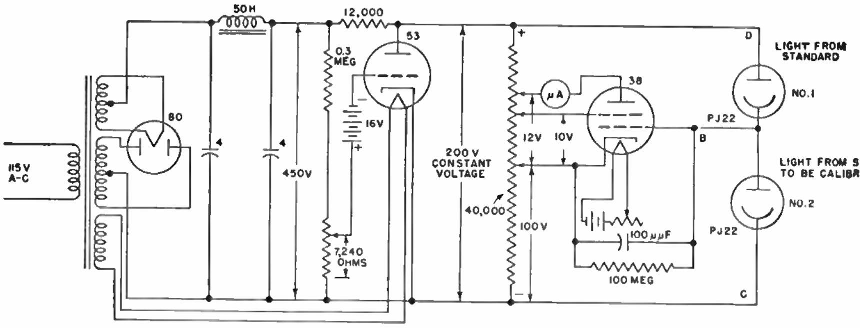

THIS circuit makes it possible to compare light intensities to an accuracy of 1/10 per cent without the use of special tubes or other apparatus.

Two phototubes are connected in series in such a way that they strike a balance between two sources of light. This balance position is reached regardless of the light level, and is in effect a null point; the use of this null method has the same advantage for precise work that the potentiometer has over the voltmeter.

Two vacuum-type phototubes are used, one of which receives light from a standard source while the other receives light from the source whose intensity is to be compared with the standard. The phototubes are connected in series, with a constant voltage supply obtained from the voltage-regulator stage. This stage uses a 53 tube, with the two sets of elements connected in parallel.

The phototubes are operated at saturation voltage, about 100 volts per tube, and as a result the upper part of the characteristic of each is used.

If the light falling on phototube 1 is equal to that falling on phototube 2, equal currents will flow in each, and the voltage applied across the two will divide equally. That is, the voltage between points *B* and *C* will have a definite value, very near 100 volts. Now if the light falling on 1 becomes greater than that falling on 2, an additional current will tend to flow in 1. This greater current will also have to flow in 2 because of the series connection, but 2 is not receiving sufficient light to cause this greater current to flow. The only way in which the additional current can flow in 2 is when the voltage across cell 2 increases. As it does so, the voltage across 1 must decrease, and the current decreases also. The net result when more light falls upon 1 is only a small increase in current accompanied by a large change in the voltage distribution between the two phototubes. The change in voltage distribution, which can be measured by measuring the voltage across points *B* and *C*, is thus a direct indication of the division of light between the two phototubes.

To measure the ratio of the lights falling on the two, therefore, it is necessary simply to measure the voltage between points *B* and *C*.

The vacuum-tube voltmeter used for this purpose uses a standard 38 tube, with the heater voltage reduced to one-half its normal value; the voltage of the screen is 10 volts. When the input voltage is minus 1 volt, this tube, operating under these conditions, will offer an impedance of a million megohms. In this way the condition of high input impedance is met; actually a value of 100 megohms is sufficiently high to permit very sensitive determinations of the voltage. The plate current is very small, not more than 50 microamperes. The current is a direct measure of the voltage between points *B* and *C*, and hence of the division of light between the two phototubes.

Even a small amount of light falling on the 38 tube is sufficient to set up photoelectric effects within it of sufficient magnitude to unbalance the circuit completely. Hence, in addition to the usual electric shielding, optical shielding is necessary. When these precautions are taken, the circuit is remarkably stable. It will operate for hours without deviating from the balance position by a tenth of a microampere in the plate circuit.

Donald G. Fink, Precise Light Measurement, *Electronics*, June, 1934, p. 190.

Phototube-thyratron Circuit for Controlling Color Temperature of Lamps

Two phototubes here control type 2050 thyratrons having plate-circuit relays which initiate and control the direction of rotation of an a-c motor which drives a rheostat in series with the tungsten lamp whose color temperature is to be maintained constant for production of direct color prints from positive color transparencies. Accuracy of control is equivalent to brightness changes arising from ±1/4-volt line variations.

The color temperature of a tungsten lamp varies in practice because of voltage changes and accumulated tungsten deposits on the inside wall of the bulb. It is relatively simple to control the lamp voltage, but it is more involved to maintain uniform color temperature during lamp darkening. It so happens that as the lamp darkens, its brightness falls as well as its color temperature. By increasing the voltage on the lamp the brightness and color temperature will increase, approximately restoring its normal characteristics.

Two phototubes are focused on the portion of the printing lamp that is directed toward the printing material. The phototube of system *A* is a 930 that has an S1 surface. The phototube of system *B* is a 929 that has an S4 surface. In system *A* a drop in illumination will cause the 2050 tube to be conductive, since the decrease in phototube current makes the 2050 less negative. Relay P_3 is thereby energized. The contacts of P_3 are connected to one side of a reversible a-c fractional-horsepower motor *M*, which turns rheostat R_1 in the required direction to increase the illumination of the lamp to the original value, as set by R_2.

In phototube system *B* an increase in illumination causes its 2050 tube to be conductive, closing relay P_4, which operates motor *M* in the direction required to decrease the lamp voltage; therefore its brightness is restored to the value originally set by R_3.

A description of the circuit function will make the color-temperature control more understandable. A positive voltage is applied to the 2050 anodes and phototube anodes during every other half cycle, when the upper side of the a-c line is positive. During these half cycles, negative bias voltage is supplied to the 2050 grid from R_3. The potential of the grid is made less negative by the *IR* drop across R_4, which reduces the negative grid potential, causing the 2050 to conduct and the relay to close.

Excellent stability of both systems is accomplished by use of the 1.0-ohm resistors in series with the heaters to re-

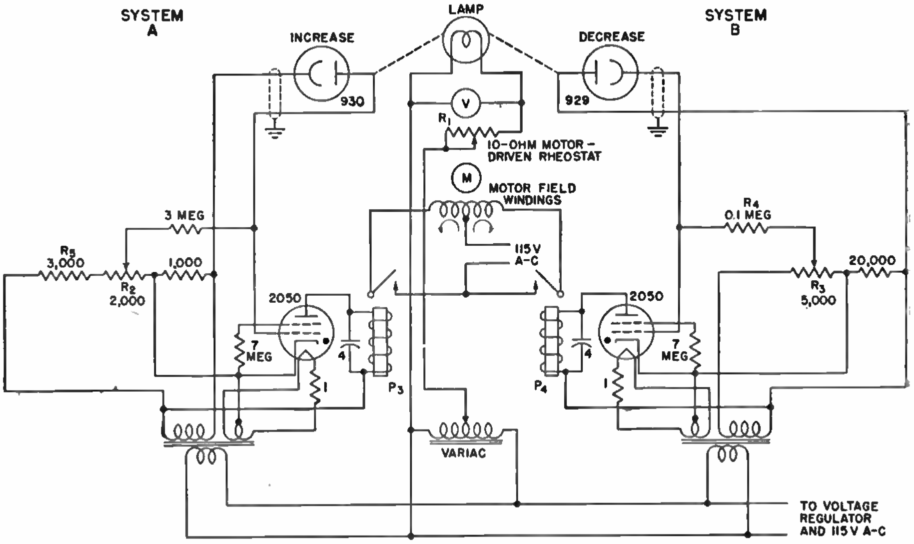

duce slightly the heater voltage and by 7-megohm resistors in the screen-grid leads of the thyratrons. Apparently the gas currents within the tube are reduced by operating the screen and heater below the rated values.

Plate relays P_3 and P_4 have a 1,500-ohm resistance to hold the relay current at a safe value.

The anode voltage of the 930 phototube in system *A* should never exceed 90 volts. Therefore it is necessary to include a 3,000-ohm resistance R_5 to limit the current through the 2050 to a value which is such that the *IR* drop across R_2 will not permit the peak voltage of the phototube to exceed 90 volts. Additional limitation is provided by the use of a 1,500-ohm plate relay P_3. Motor *M* is a gear-reduction motor whose secondary shaft rotates at 1 rpm and is coupled to rheostat R_1.

The purpose of the Variac is to set the voltage to meet the color-balance requirements of the printing material. The permissible tolerances in color temperature for maintaining uniform color balance in finished prints are determined experimentally. These data are then used for the monitoring range of the printing lamp, which is set by positioning the contacts of R_2 and R_3 of systems *A* and *B*.

Systems *A* and *B* must be isolated from each other to prevent one system from influencing the other. For this reason isolation transformers are used.

J. Robins and L. E. Varden, Photoelectric Controls for Color Printing, *Electronics*, June, 1946, p. 110.

Photoelectric Amplifier with Cathode Follower for High-speed Response

The amplifier to be described contains no coupling capacitors between stages and therefore only the inertia of the relay limits the speed of operation. In addition, it is positive in its action, being unaffected by normal power-supply changes and parameter changes over a wide range.

Assume the phototube to be removed from the circuit. Under this condition, the grid of the first 6SN7 section (the cathode follower) is at ground potential. Plate current of both sections of the 6SN7 flows through the 2,200-ohm cathode resistor, so that the cathode follower is biased almost to cutoff.

The second section (control amplifier) of the 6SN7 has a positive 9 volts on the control grid, so that it conducts sufficiently for the plate voltage to drop to about 50 volts. The combined plate currents furnish a positive voltage of about 10 volts on the two cathodes. The plate of the control amplifier is connected to the power-amplifier screen, which then has a potential of 50 volts. The grid of the 6V6 is grounded, and bias for the stage is furnished by the voltage divider consisting of R_9 and R_{10}, plus whatever voltage is developed across R_{10} by plate current. With 50 volts on the screen grid, 250 volts on the plate, and about 10 volts on the cathode, the tube is very nearly cut off, and the relay in the plate circuit remains unenergized.

When the phototube is inserted in the circuit and illuminated by an outside source, current through the phototube makes the grid of the cathode follower more positive. The increase of cathode-follower current results in a higher cathode voltage of 22 volts for the stage. This rise also is applied to the cathode of the control amplifier. Since the grid voltage of the control amplifier is held constant by divider R_6 and R_7 at 9 volts, the tube is cut off.

The result of the drop in plate current is to raise the plate voltage, and hence the screen voltage of the power amplifier, to 170 volts. This increased screen voltage permits the 6V6 to conduct heavily enough to close the relay in the plate circuit. This relay then serves to control whatever device may be used with the amplifier.

The actual voltages for the nonoperative condition are between those given in the two cases above, since under normal conditions the phototube conducts to some extent but not enough to operate the relay.

If desired, the device can be kept normally energized by a light source on the phototube, in which case any interruption of the beam would deenergize the relay and operate the controlled device.

Resistors R_2 and R_3 are the coarse and fine sensitivity controls, respectively. One control may be used, but if both are used, adjustment of the amplifier is simplified. If the plate of the phototube is connected to the arm of R_2 and if R_3 is not used, R_1 should be replaced by a 750,000-ohm resistor.

Maintain moderate tension on the relay spring, with as small a travel distance as necessary to prevent sparking from being maintained when the contacts are opened. A suppressor capacitor should be used across the relay contacts. Adjust R_3 to the maximum-sensitivity position (all 5,000 ohms in the circuit). Adjust R_2 to the maximum-sensitivity position. If the relay is properly adjusted, it will now operate regardless of the light on the phototube. If it does not, change the spring adjustment or the contact gap.

With the phototube under excitation from the light source with which it will be used, back off R_2 until the relay is deenergized. Rotate R_2 about one-eighth

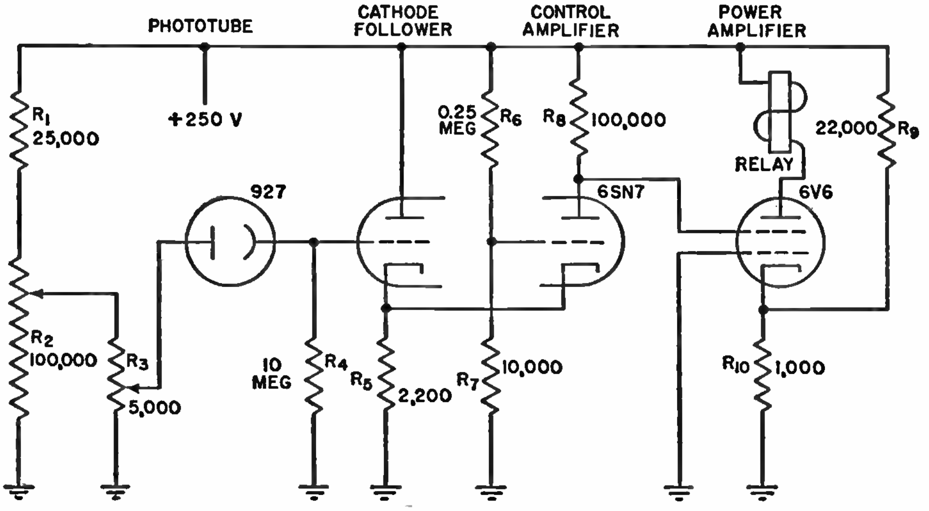

of a turn in the reverse direction. The relay will again be energized. Rotate R_3 until the relay is deenergized, and reverse the adjustment just past the point at which the relay energizes again. This last step completes the adjustment. Cutting off the light source will deenergize the relay, and applying it will give positive closing of the relay. It is recommended that the leads to the phototube be shielded, as the cathode follower acts as a rectifier in the presence of 60-cycle pickup, changing the voltage levels in the amplifier. With proper placement of the leads, however, this causes no trouble even without the shielding.

No bypass capacitor can be used at the input grid, because the 10-megohm resistor in conjunction with a sufficiently large capacitor to bypass 60 cycles would cause intolerable delay in circuit reaction time.

John F. Scully, A Phototube Amplifier, *Electronics*, October, 1945, p. 168.

Variable-range Variable-sensitivity Photoelectric Light-variation Indicator

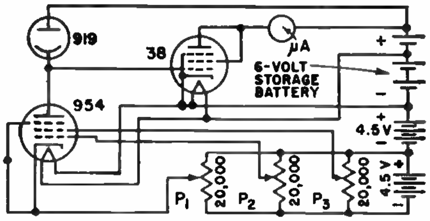

THE sensitivity of a light-intensity-meter indicator for small percentage changes of light can be reduced to any desired degree by varying the plate characteristics of a type 954 tube between those of a pentode and those of a triode. This variation is produced in the circuit shown by properly adjusting potentiometers P_2 and P_3 to control the relative potentials on the control grid and the screen grid. When the No. 2 grid of the 954 is positive with respect to the cathode, the 954 has a high-impedance pentode characteristic. Changing the No. 1 grid bias changes the height of the flat top of the $e_p - i_p$ characteristic. As the potential of the No. 2 grid is made more negative, the characteristic curve rises again soon after reaching the saturation plateau. With zero bias on the No. 1 and No. 2 grids, the characteristic curve rises almost exponentially from zero. When a negative bias is placed on the No. 2 grid, the exponential shape of the characteristic is unchanged, but it is shifted along the voltage axis. If the No. 1 grid is biased properly, the slope of the characteristic is increased.

The 954 phototube load can thus be adjusted to give practically any desired positive impedance load at any desired current and at any desired voltage across the tube. This means that the full-scale reading of the output meter can be made to cover a fraction of a per cent of light variation, or any desired amount of variation between these two extremes.

This circuit finds application as a densitometer for use in connection with the analysis of photographically recorded spectra, for use in connection with a suitable monochrometer, or light filter, as a means of measuring the absorption lines or the concentration of certain chemicals in solution, and in a large number of other applictions.

F. H. Shepard, Jr., Some Unconventional Vacuum Tube Applications, *RCA Rev.*, October, 1937, p. 149.

Phototube Relay Circuit Using Thyratron Amplifier for Small Light Differentials

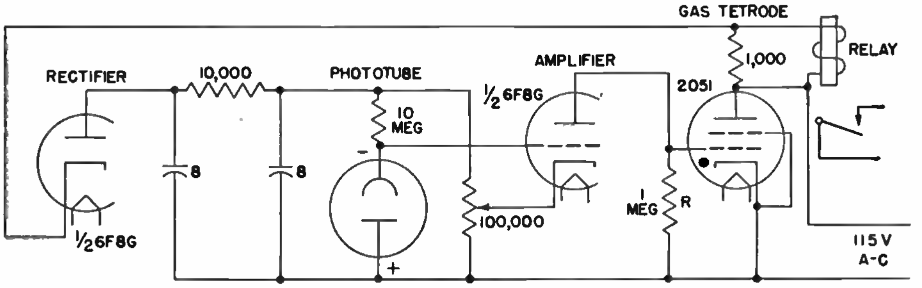

WHERE relatively great sensitivity to small changes in illumination is required, the gas tetrode can be used as an amplifier coupled to the phototube, as in this marginal limit photo-relay circuit that will control the gas-tetrode relay tube within specified limits of incident light.

Applications include the counting of textile threads by a modified sound-on-film optical setup and the control of the articulated rails of textile-finishing tenter frames by photoelectric means. In both instances a small light differential is involved, making action more positive when amplification is employed.

A diode rectifier is connected backwards to produce an output of the polarity indicated. This output is applied to the phototube circuit and the amplifier tube in such a way that any increase in amplifier plate current will increase the drop in resistor R, increasing the negative bias in the gas-tetrode grid-cathode circuit. By adjusting the potentiometer the bias on the amplifier can be adjusted so that the firing point of the gas tetrode will coincide with a desired light value on the phototube.

Gilbert Smiley, Control Circuits for Industry, *Electronics*, January, 1941, p. 29.

Battery-operated Circuit for Measuring Ultraviolet Radiation Intensities

THE metering circuit shown was developed to provide a portable rapid-reading instrument for making surveys of radiation intensities where the predominant wavelength is 2537A, at which there is a high percentage of the radiant energy from low-pressure mercury-vapor lamps used for germicidal purposes. Use of a type WL775 phototube with a pure tantalum cathode gives insignificant response to wavelengths above about 3000A, which permits reliable measurements in the presence of considerable daylight.

Use of a null instrument makes accuracy independent of vacuum-tube stability and linearity. A 1G6G double triode serves as an impedance changer to match the high impedance in the phototube circuit to the low resistance of the Weston model 440 d-c microammeter used to indicate balance of the grid voltage of the left-hand triode (in the phototube circuit) with the fixed grid voltage of the other triode. Balance is obtained by a voltage picked up in a calibrated 10,000-ohm potentiometer in an auxiliary circuit. A switch permits shunting either a 100-or 1,000-ohm fixed resistor across the potentiometer to provide a choice of three ranges.

For operation, switch *S* is placed in the Calibrate position, and R_1 is adjusted to make the meter read a predetermined standard current through R_3. Switch *S* is then thrown to the Operate position, the movable contact of R_3 is set at zero, and R_5 is adjusted (no ultraviolet on phototube) to bring plate currents into balance. The phototube is now exposed to the radiation to be measured, thereby lowering the phototube resistance and unbalancing the plate currents. Adjusting calibrated potentiometer R_3 to buck out the voltage on the grid in the phototube circuit brings the meter back to zero, and ultraviolet intensity can be read directly from the setting of R_3 (which of course must be previously calibrated) against a standard instrument. All resistors except the 100-meg-

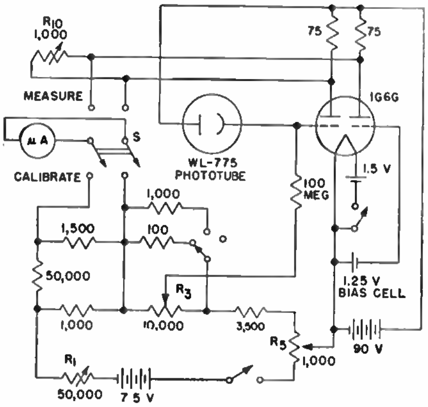

ohm grid resistors should be wire wound. For maximum sensitivity, the two plate resistors (shown as 75 ohms) should be half the resistance of the meter. Rheostat R_{10} is a Ayrton shunt, used to protect the meter at large unbalances of plate current.

Howard L. Andrews, An Ultraviolet Intensity Meter for Field Use, *Rev. Sci. Instruments*, September, 1945, p. 253.

Phototube-operated Trigger Circuit Actuating a Counter for Power Measurements

THIS electronic power-measuring circuit, developed to measure power continuously and accurately, consists essentially of a G-E type I30A watt-hour meter having a 2.5-ampere current coil used directly to give the low watt-hour meter constant of 0.3 watt-hour per revolution, used with a photoelectric counting arrangement to obtain much higher accuracy than is possible with the watt-hour meter alone.

The register dials were removed, and a small plane mirror was glued to the rotating shaft of the meter. In the place occupied by the register dials, a small light source and a phototube were mounted. The light source is a 2.2-volt Penlite or Lenslite flashlight bulb that has a fairly concentrated beam.

The phototube was an RCA 923 with the base removed, although the type 924 might be preferable due to its smaller size. Both the light source and the phototube were mounted within the glass case of the meter, which was painted on its inner surface with black paint. The phototube was connected to the electronic amplifier and counting circuit, which counted the revolutions of the watt-hour meter as detected by the rotating mirror.

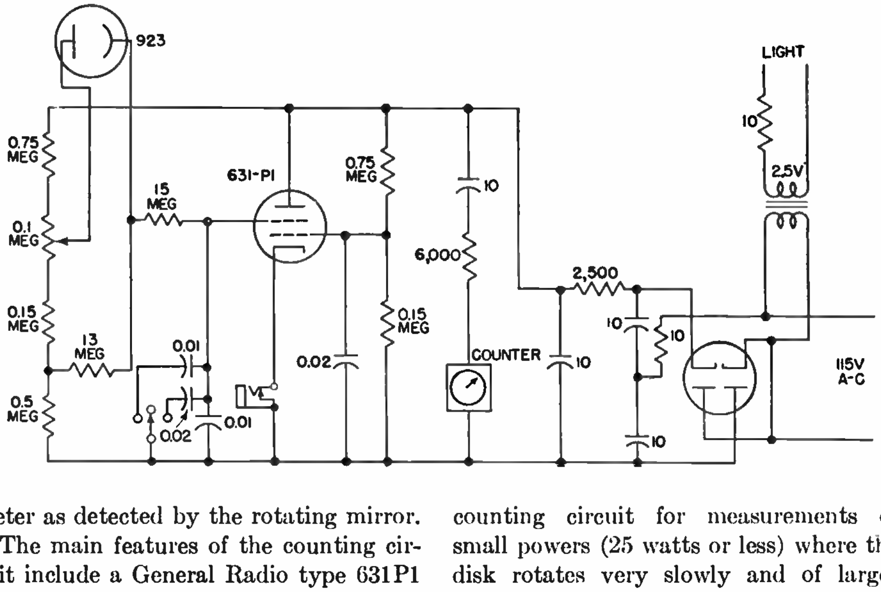

The main features of the counting circuit include a General Radio type 631P1 Strobotron tube, which is of the cold-cathode trigger type, and a Cenco No. 73511 high-speed high-resistance counter. For every revolution of the meter disk and mirror, the phototube initiates an impulse that triggers the Strobotron and registers on the counter.

An adjustment is necessary and is provided in the circuit to adapt the counting circuit for measurements of small powers (25 watts or less) where the disk rotates very slowly and of larger powers (300 watts) where the meter rotates much more rapidly. This gives a relatively inexpensive and rugged power-measuring instrument which may be easily calibrated against the more expensive rotating watt-hour meter standard which would be necessary in its place.

Robert V. Brown, Electronics Applied to Heat Transfer Tests, *Electronics*, July, 1943, p. 113.

Precision Photoelectric Color-matching Circuit for Inks or Dyed Papers

Color matches are designated by this two-phototube circuit with high precision as required for duplication of colors of printing inks or dyed papers on repeat orders in the paper industry. Either reflection or transmission methods of matching may be used.

The phototubes are connected into a sensitive bridge circuit, with a voltage divider across the charging voltage of the phototubes to balance the system. By adjusting the divider, the pointer of the microammeter can be brought to midscale with no light on the phototubes.

The phototubes have top-cap connections, the anode being brought out to the cap on one tube, the cathode on the other. The grid cap of the amplifier tube connects only to the top caps of the two phototubes. Short top-cap connections to the three tubes result in an extremely high resistance-leakage path. Leakage may be further decreased by coating the three tubes with a nonhygroscopic wax. The windows of the phototubes should be free from wax.

A bias voltage divider on the pentode compensates for differences in phototube sensitivity by allowing shift of the grid-plate characteristics of the amplifier tube.

With all switches off, the main power switch is snapped on and the machine is given several minutes to condition. The balancing circuit knob is turned on and the meter needle centered on the midscale. A reflector is placed in the back window trap. One of the color filters is placed in the slide and the standard color is placed in the front window trap. The light source is next snapped on and, with the calibrated light valve set at zero midscale, the shadow vane in the lamp house is adjusted to bring the meter needle back to zero. The standard is now replaced with the sample to be matched against it. If the meter needle deviates from zero, it indicates a mismatch, plus or minus.

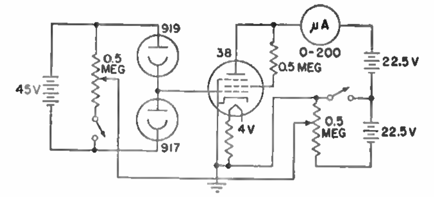

Again the meter needle is brought to zero by an adjustment of the calibrated light valve, or iris diaphragm. When this condition obtains, the reading on the light-valve scale is indicative of the percentage of difference in the tonal range of the sample and standard as far as that particular band of the spectrum is concerned. The other necessary filters are now placed consecutively, and the above operations are repeated. Red, blue, and green Wratten filters are used.

E. L. Deeter, Color Matching in the Paper Industry, *Electronics*, September, 1938, p. 18.

Photoelectric Amplifier for Mirror Galvanometer

A three-stage amplifier and phototube used with a mirror galvanometer in the manner shown here provide sufficient power to actuate the stylus of a recording galvanometer, with a total magnification adjustable in the range of 500 to 1,500 times. In the original application for recording earthquakes, the output of a seismometer was fed to the mirror galvanometer.

The optical system is adjusted so that the at-rest position of the seismometer provides 50 per cent illumination of the phototube cathode. The output of the phototube is stepped up by a single pentode stage operating from its own VR150 regulator tube, and then fed into a 6SC7 twin-triode used as an amplifier and self-balancing phase inverter for exciting the 6E6 twin-triode power amplifier that feeds the push-pull coils of the recording galvanometer to actuate the stylus.

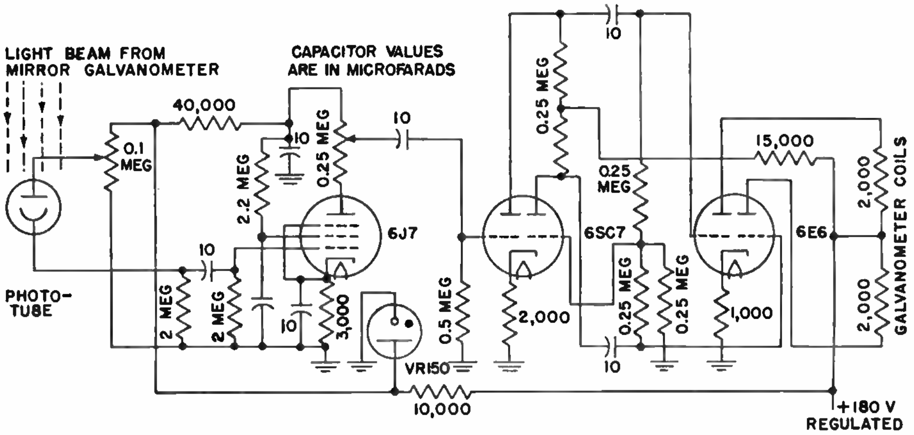

Earthquake Recorder, *Electronic Industries*, October, 1944, p. 98.

Phototube-controlled Electronic Timing Circuit for Contact Printers

Once correct exposure has been determined for a given negative, this phototube-thyratron control circuit automatically ensures that all contact prints made from that negative will have uniform density regardless of variations in lamp intensity due to changes in lamp-filament temperature.

Variations in density due to thermal inertia in the lamp filaments can be overcome by exposure through a shutter rather than by increasing and decreasing the brilliancy of the lamps. If the exposure is actually measured by using a phototube to discharge a timing capacitor, the device will be self-compensating for line-voltage changes, darkening of the lamp envelopes, or any other change that varies the light intensity. An Eastman No. 12 studio printer is easily modified to incorporate such a timing device.

A thin aluminum-vane shutter is placed between the light and the shield. It is operated electromagnetically by a coil in the anode circuit of a miniature thyratron (type 2050).

The time cycle is determined by the time required to discharge a capacitor in the grid circuit of the thyratron from one fixed voltage to another. A phototube is used to discharge the capacitor, and the rate of discharge is determined by the intensity of the light falling on the tube.

The phototube, placed so as to receive light directly from the lamp when the shutter is opened, is housed in a light-tight box with a small window that is covered with a photographic film step wedge. The wedge, which varies the time of exposure, can be moved one step at a time in front of the window by means of a drum having a detent device which accurately locates each step in front of the window. The control knob is mounted on the front of the printer, where it is readily accessible to the operator.

The resistor required as a grid return for the thyratron determines the maximum time of operation. Its resistance is made as high as possible (consistent with stable operation) in order that the dark time be so long that it has a negligible influence on the actual operating time.

The snap-action switch actuating the timer is set to close just after the mercury switch that turns the light on. They are both automatically operated by closing the platen. When the snap-action switch disconnects the timing capacitor from the charging source and connects it to the cathode of the phototube and grid of the thyratron, the thyratron is extinguished. This deenergizes the solenoid and allows the shutter to expose the aperture. The current flow caused by the light thus allowed to fall on the phototube discharges the capacitor at a rate dependent on the light intensity. When the capacitor has discharged to a definite voltage established by the other electrode potentials, the thyratron again fires and closes the shutter. The light is extinguished, and the capacitor is recharged for the next timing cycle when the platen is lifted.

The grid lead of the thyratron and the cathode lead of the phototube must be well insulated and well shielded. The 2-μf timing capacitor must be a high-quality paper-insulated type.

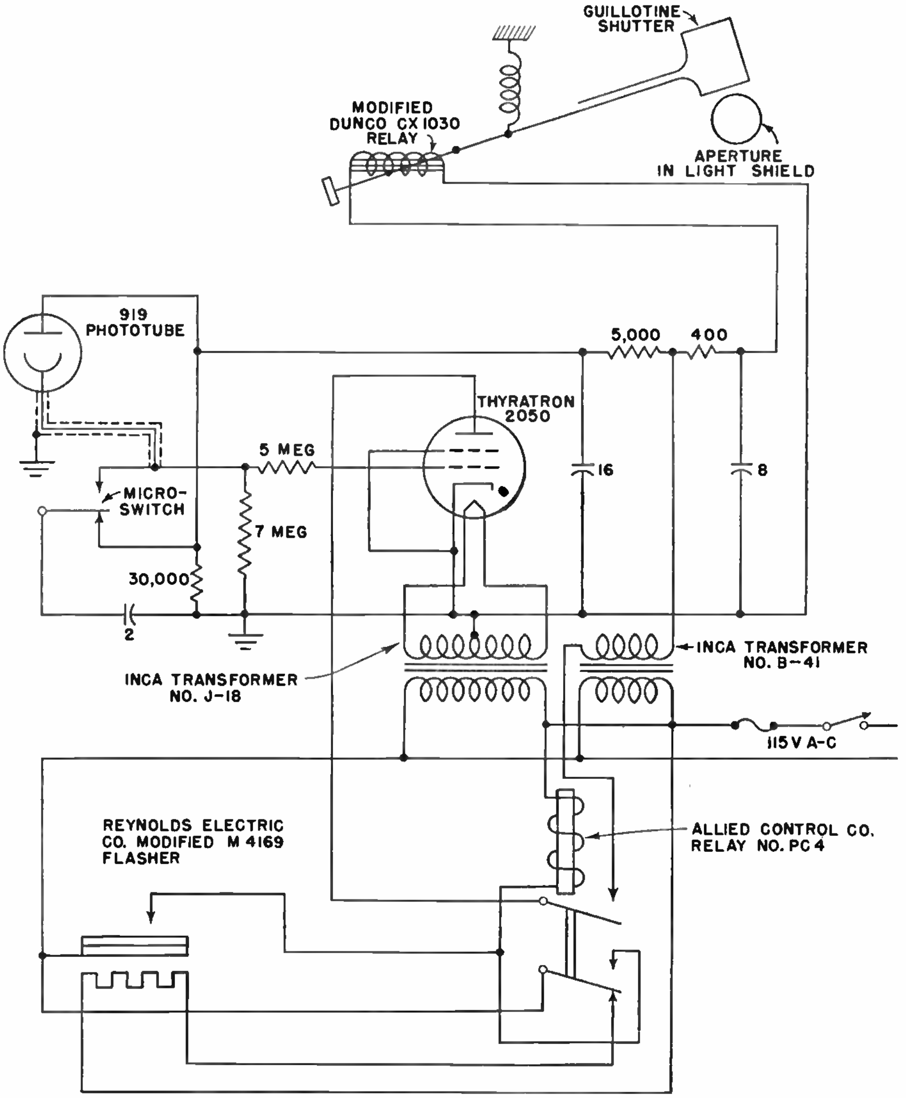

A time-delay relay is essential to protect the cathode of the thyratron from ion bombardment by delaying application of anode potential until the cathode has heated. The delay system, which resets itself after operating, is improvised from an inexpensive thermostatic sign flasher and an a-c relay. Other components are standard radio parts.

C. J. Penther and C. Weiske, Photoelectric Contact Printer Control, *Electronics*, September, 1943, p. 114.

Self-compensating Voltage Supply for Multiplier Phototubes

In the self-compensating circuit used in connection with the multiplier phototube shown, a part of the voltage divider consists of two VR150 tubes. With a fluctuating line voltage the variations in the voltage of dynode 7 are, therefore, larger than those in the voltage of the other dynodes and can be used to counterbalance any changes in the latter.

The anode current can be measured with a galvanometer without further amplification, using 75 volts between adjacent dynodes, or 900 volts over all. With the maximum voltage of 120 volts per step, the anode output could have been increased more than tenfold. A similar high output could be obtained with the new 931A tube at the normal 100 volts per step.

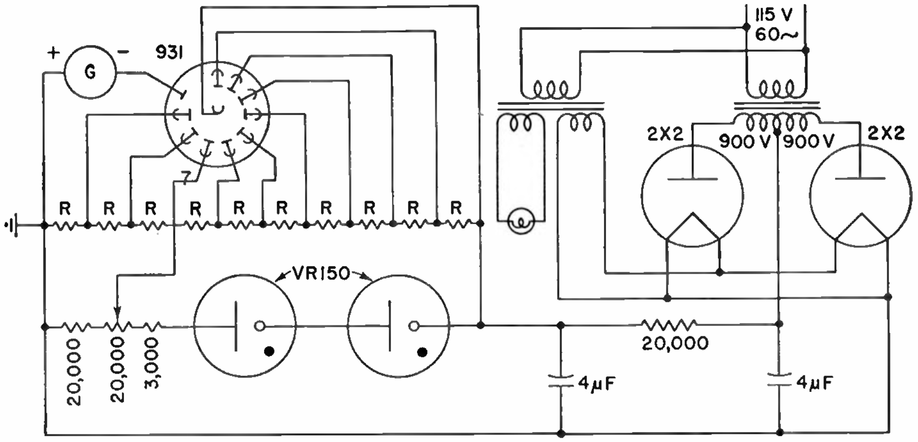

Peter Pringsheim, Microanalytic Measurement of Oxygen Production, *Electronics*, December, 1945, p. 340.

Sensitive Photoelectric Light-intensity Indicator

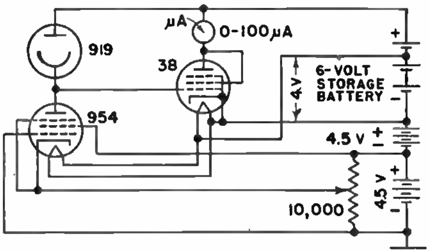

With this sensitive photoelectric amplifier circuit, it is possible to indicate easily light differences or changes that may be small parts of 1 per cent, as required for accurately matching the intensities of amounts of light.

The high-impedance type 954 pentode acts as a load impedance for the type 919 high-impedance vacuum phototube. The potential of the common connection between the 919 and the 954 is determined by the intersection of the $e_p - i_p$ characteristics of the tubes, and a small change of light on the phototube will result in an output of several volts. This output voltage is applied to the grid of a type 38 output tube, the plate current of which is indicated on a 100-microampere meter.

Because the phototube with the 954 load has an extremely high output impedance, it is necessary to operate the 38 so that its grid-input impedance is extremely high. To reduce the grid emission to a minimum, the voltage to the heaters of the 38 and the 954 is reduced to 4 volts. The possibility of emission from the heaters to the grid is eliminated by operating the heaters at a potential positive with respect to the plate of the 954 and the grid of the 38. Gas current to the grid of the 38 is kept at a minimum by keeping the potentials within the 38 low so as to minimize the ionization of any gas that may be in the tube.

Because all the high-impedance external connections are made to electrodes brought out from the tops of the tubes, external leakages are reduced to a minimum. External leakage can be greatly reduced by carefully cleaning the tubes, dipping them in hot ceresin wax, and holding them under the surface of the wax until the greater part of the moisture on the glass is boiled off.

This circuit can be used to indicate the absorption of light by a fluid, as well as to indicate or control the concentration of certain chemicals in suspension or solution. Monochromatic light can be used to advantage when it is desired to isolate a particular constituent. The circuit also finds application for color matchers. When measuring small changes in light, a change of light intensity of the order of two millionths of a lumen is sufficient to swing the output meter over its full scale.

F. H. Shepard, Jr., Some Unconventional Vacuum Tube Applications, *RCA Rev.*, October, 1937, p. 149.

POWER SUPPLY CIRCUITS

Radio-frequency 30,000-volt Power Supply for Projection Cathode-ray Tubes

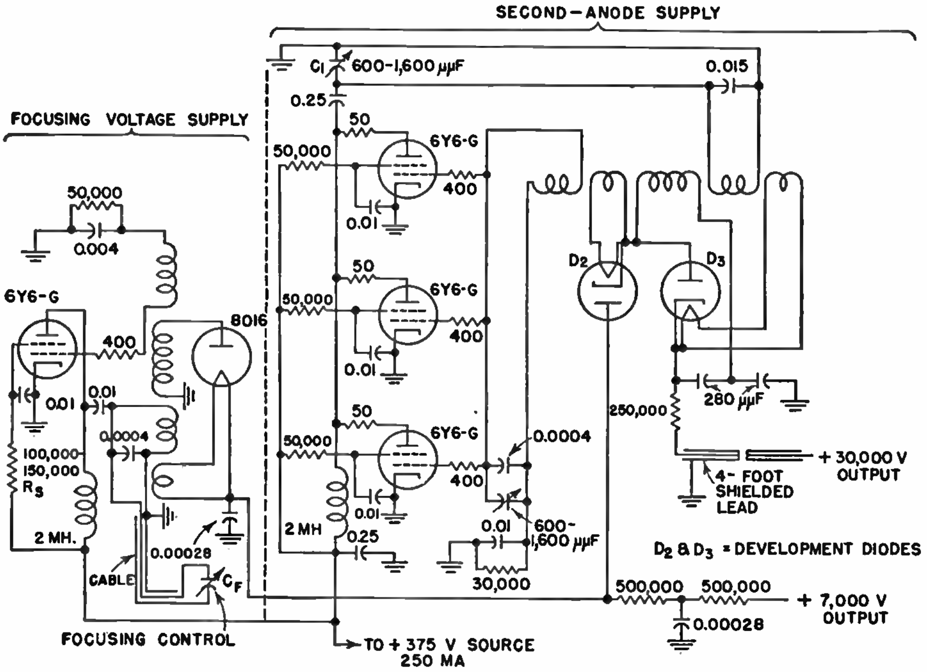

TUNED step-up transformers in a self-excited oscillator circuit serve here as a high-voltage source for kinescopes and projection cathode-ray tubes. The use of r-f power of the order of 300 kc permits a substantial reduction in transformer inductance and simplifies transformer construction.

The input power is generated by a vacuum-tube oscillator, which automatically limits the possible power output of the unit. Output voltage is 30,000 volts for the second anode of the cathode-ray tube, with approximately 50 watts of power. A separate oscillator for the focusing voltage is used. The focusing voltage can be varied from 4 to 7 kilovolts by tuning the primary of its oscillator circuit. The main second-anode supply employs a voltage-doubling circuit energized by three parallel 6Y6G oscillator tubes. Both supplies are operated in series to maintain a desired voltage ratio under varying load conditions.

Voltage stability and focus regulation under actual operating conditions are quite satisfactory. Little difficulty was experienced in preventing oscillator interference with television equipment, but isolating resistors or chokes may be required when a single source of filament or B supply is used.

The obtainable power output is limited by the oscillator power. This method permits the construction of safe supplies where the current requirements are not too high. This low-power reserve also protects the kinescope and rectifier in case of sparkover or accidental short circuits because of the small short-circuiting current. It must be remembered, however, that currents of dangerous magnitude are obtainable, depending on the voltage step-up and the oscillator power. For such conditions, due precautions for safety must be taken.

The cost of high-frequency-operated supplies compares favorably with 60-cycle supplies when the oscillator power is moderate and when, consequently, small oscillator tubes can be used.

O. H. Schade, Radio-frequency-operated High-voltage Supplies for Cathode-ray Tubes, *Proc. Inst. Radio Eng.*, April, 1943, p. 158

Shunt Diode for Economical Bias Supply in Power Amplifiers

IN the conventional bias supply for amplifier tubes, a diode is connected in reverse and is used as a half-wave rectifier for negative output. This requires a separate heater winding or extra filament transformer because the heater-cathode rating is usually exceeded. Then, if the voltage to the input capacitor of the bias filter is exceeded, an input resistor is necessary. For less than 100 volts of bias, an additional resistor is needed and power is wasted and a lot of heat dissipated.

The circuit shown uses a shunt diode with the cathode grounded so there is no problem of breakdown from cathode to heater. The load is tied directly across the output filter capacitor and the dropping resistor is eliminated. The capacitors work at low voltage so their rating need not be high. The entire voltage drop is accomplished in the input capacitor *C* with no loss of power and no heat.

For an output of 100 volts at about 8 milliamperes (to 2A3 grid-voltage control potentiometers or other load), *C* will be of the order of 0.1 μf. It will vary with line frequency and load requirements.

If separate bias voltages are not required, the load resistor (which is merely a grid return to ground) may be removed from the output capacitor and placed across the diode from anode to ground. The grid returns are connected to the filter output. Since the filter is then unloaded, this will provide even better filtering.

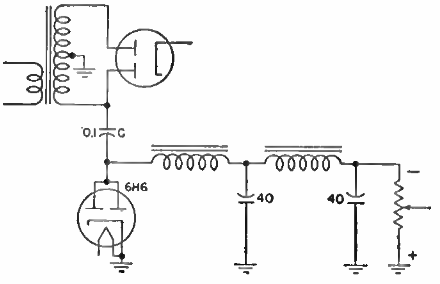

The circuit shown delivers 100 volts across four 5,000-ohm potentiometers connected in parallel to supply the grids of push-pull parallel 2A3's. The ripple level is 0.01 volt.

Howard T. Sterling, Use of Shunt Diode for Supplying Bias Voltage, *Electronics*, September, 1945, p. 218.

Radio-frequency Oscillator as Power Supply for Photoelectric Light Source

Many applications of phototubes and photocells require that the exciting lamp used as a light source be supplied with current that produces no audible modulation of the light beam. The oscillator circuit shown operates in the 100-kc region and has been used to light a 6-watt lamp in a 16-mm sound projector.

In addition to the grid-leak bias there is shown a self-biasing resistor. Should the exciter lamp burn out, the tube might cease to oscillate and the cathode resistor would then bias the grid and hold the plate current down to a normal value. The variable rheostat in the plate circuit varies the brilliance of the lamp.

Inductor L_1 is of the air-core type, wound on 3-inch tubing with ⅜-inch inner diameter. There are three windings: a primary coil of four layers, 130 turns each of No. 28 wire; a feedback coil of 130 turns of No. 28 wire; and a lamp winding of 25 turns of No. 18 enamel wire. One side of the lamp winding may be grounded.

With this type of oscillator, a high-quality sound amplifier may be employed, since no attenuation of the low-frequency response is necessary. An objectionable feature of this circuit is that the brilliance of the lamp changes with line-voltage variations.

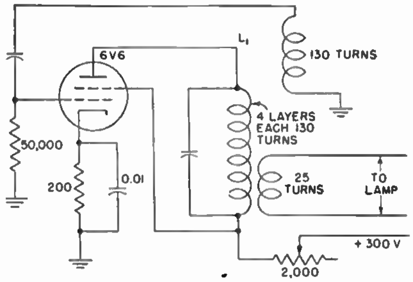

Daniel Schulman, Power Supplies for Photoelectric Controls, *Electronics*, February, 1945, p. 177.

Self-excited Inverter Circuit Using Grid-controlled Gaseous Tubes

This inverter circuit is a variation of the so-called separately excited parallel-type inverter using grid-controlled gaseous tubes, with certain additions for ease in starting. It provides a-c power up to about 1,000 watts at varying frequency from 40 to 110 cps from a d-c source.

The grid of each tube is connected to a circuit consisting of a capacitor, an inductance, and a variable resistance. The capacitor is charged when the tube to whose anode it is connected is not conducting, since it is then in effect across the whole primary winding of the transformer less the voltage drop in the other tube. The capacitor discharges through the *R-L* circuit and the tube to which it is connected, when this tube fires. The constants of the components of the *R-L-C* circuit to which each grid is connected are so chosen that the discharge is oscillatory, the frequency being adjustable by the value of the variable resistance. That this discharge be of oscillatory nature is required in order to have a sharp approach of the grid voltage to the zero line, which will give a definite firing time for each tube, and also by the fact that under certain conditions of operation, such as low values of anode voltage, positive voltage is required for firing the tube.

Assume that the circuit is in operation and that tube T_2 has just fired. Capacitor C_2, which has been charged to nearly the full potential of the transformer primary and which has its positive terminal conected to the anode of T_2, now starts to discharge through this tube and the associated *R-L* circuit at a rate determined by the constants of this circuit. This discharge holds the grid of T_1 negative, thus preventing its firing, although its anode voltage rapidly becomes positive after the negative commutating impulse from the commutating capacitor, which stopped it from further conduction.

As the discharge of C_2 progresses, the voltage applied to the grid of T_1 decreases until the critical grid firing potential is reached and this tube fires. The commutating capacitor C then discharges and stops T_2 from further conduction. While all the above action has been taking place, C_1 has been charging, and it now repeats the performance of C_2, this time preventing the firing of T_2 until the proper time is reached.

The recurrent action of the discharges in the two grid circuits causes the tubes to fire alternately, thus giving an alternating current in the secondary of the transformer. The variable resistances in the grid circuits control the frequency of the output current. They are adjusted together when the frequency is changed and are in such relation to each other that the current taken by each tube is the same. This latter feature of operation is of considerable convenience, since gas-filled arc tubes seldom have exactly the same characteristics and some type of balancing circuit must be used.

The grid transformer and switch S allow the circuit to be started as a separately excited inverter if inverter action is at times difficult to start. To use this method of starting, R should be adjusted to give the inverter the same approximate frequency as is supplied to the grids. Switch S is closed and low-voltage direct current applied to the input. As soon as the inverter starts, S is opened and the d-c voltage brought up to the operating value.

The higher the frequency, the smaller may be the commutating capacitor C. For best results it is often advisable to reduce the value of C as frequency is increased. In common with many other inverters, the output wave form of this circuit is by no means perfectly sinusoidal and is affected considerably by the character of the load. However, this inverter is quite stable, operating much like a small alternator. With sudden application of additional load both the voltage and frequency drop until the load is picked up, then both rise to normal.

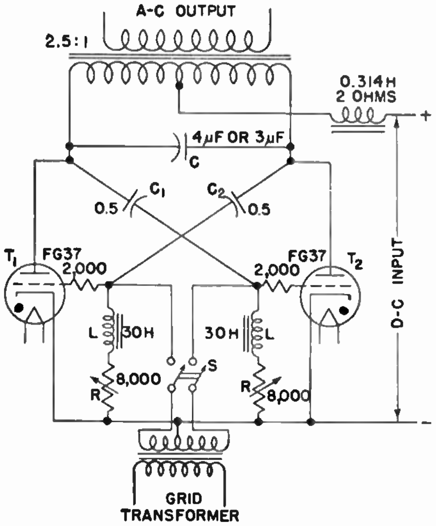

The regulation of this inverter is poor, which is one of the reasons why electronic inverters have not been more numerous. This poor regulation requires some means of adjusting the d-c input voltage and it usually requires some power-consuming device in this circuit unless the inverter is operated directly from a d-c generator whose field may be adjusted, or from a grid-controlled rectifier.

Frederick N. Tompkins, Operation of a Self-excited Inverter, *Electronics*, September, 1940, p. 36.

Bias and AVC Delay Voltage from Shunt Diode

One source of bias voltage that is seldom utilized by design engineers is the heater voltage applied to the tubes. Use of a shunt diode for this purpose permits saving of cathode bypass capacitors and resistor and the space they occupy. In the circuit shown, diode *A* operates as a shunt diode fed with alternating current from the heater line. Three volts can be supplied to the delayed avc line and a-f bias using the values given. Increasing the values of capacitance *C* and resistance *R* permits obtaining as much as 9 volts.

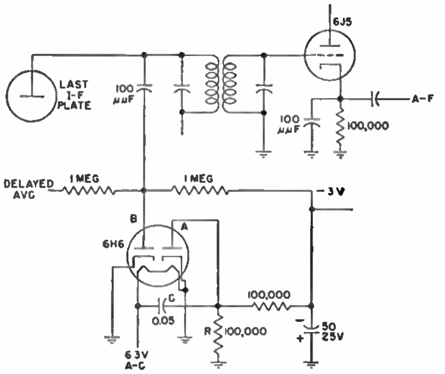

The avc diode *B* is also wired in shunt and is fed from the plate of the last i-f stage so that the flywheel effect of the transformer secondary will smooth the peak shunting due to the diode, and hence will eliminate distortion from this source. The detector is an infinite-impedance type so as not to load the secondary of the i-f transformer and reduce the Q. Cathodes of the tubes supplied with bias voltage may be grounded.

Howard T. Sterling, Use of Shunt Diode for Supplying Bias Voltage, *Electronics*, September, 1945, p. 218.

Series-parallel Operation of Thyratrons for Production of High-power Pulses

The power-handling capabilities of thyratrons as pulse generators are greatly increased by operating the tubes in series-parallel as shown here. The technique is the same as that used with thyratron line-type modulators for pulsed radar sets.

In multiple operation of thyratrons, the load should be divided equally between the tubes. The time delay of firing a thyratron varies from tube to tube and varies during its life. The time interval between the initiation of grid voltage and the beginning of anode current is called time delay. It is necessary to ensure that each tube starts conducting anode pulse current at the same instant. If one tube starts conducting appreciably before the second tube, the output wave form will be distorted.

The operation of thyratrons in series automatically ensures that both tubes will conduct anode current during the same period of time, and hence the output pulse shape will not suffer. It also ensures that the tubes will conduct equal currents. By means of a resistance voltage divider, the circuit voltages may be adjusted so that each tube is subjected to half of the peak network voltage.

Parallel operation of thyratrons may be achieved simply by using separate pulse networks for each tube, provided that the variation in firing time normally encountered does not adversely affect the output pulse shape. On very wide pulses, the effect of one tube starting conduction a fraction of a microsecond before the other is not a serious disadvantage. However, on narrow pulses (about 5 microseconds), the variation in firing time of a few tenths of a microsecond must be considered. Under these conditions it is necessary to provide some method of preventing power pulse current from flowing until all tubes have been ionized.

The grids of series-connected tubes 1 and 2 are fired by a conventional thyratron trigger. Point *X* on the circuit drops to practically ground potential. For a small period of time (0.1 to 0.25 μsec for 5C22 tubes), tubes 1 and 2 are ionized and are capable of passing the power pulse. However, the secondary of transformer *T* sees an open circuit (because tubes 3 and 4 have not fired), and hence prevents the power pulse from flowing through tubes 1 and 2. Transformer *T* is a 1 to 1 phase-reversing pulse transformer.

A negative pulse appears at terminals *XZ* of the transformer because of the firing of tubes 1 and 2. This negative pulse is reversed by the transformer, and the anode potentials of tubes 3 and 4 start increasing.

The increase in anode potential of tubes 3 and 4 causes their grids to become positive because of the grid-anode capacitance, and firing of tubes 3 and 4 is accomplished.

When all tubes are conductive, the transformer equalizes the currents in the tubes by virtue of the unity turns ratio. The impedance it offers to the main pulse energy is presented only by its leakage inductance. The actual added circuit inductance is equal to one-fourth the sum of the primary and secondary leakage.

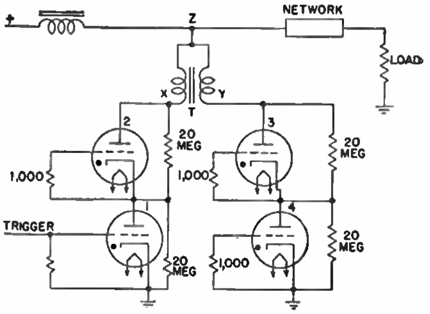

Measurements on Sylvania 5C22 tubes showed that in the parallel circuit the maximum delay time (time between the instants of firing of the two tubes) for tube 2 was 0.25 microsecond. The transformer used for the tests consisted of two coils of 15 turns wound on a 0.002-inch Hipersil core of 3 square inches area. This transformer satisfactorily passed main anode pulses of 1.5 μsec and 5 μsec at 16 ohms impedance.

Because of the extremely rapid rate of rise of voltage applied to the grids, the increase in jitter introduced by the addition of the second tube is reduced to a minimum. Measured values of jitter were always less than 0.04 μsec.

Combining the series and parallel circuits permits operation at extremely high power levels. It is only necessary to trigger one of the four tubes. When tube 1 is triggered, tube 2 becomes ionized in a manner similar to that of series operation. Then after tubes 1 and 2 are ionized, transformer *T* operates as before and triggers tubes 3 and 4. Which of these becomes ionized first will probably depend on the individual tube characteristics. A modulator using this circuit and four 5C22 tubes has been constructed and will handle 30,000 volts, 2 microseconds, with 200 pulses per second. It has been operated satisfactorily at about 10 megawatts.

Irving Sager, Multiple Thyratron Circuits, *Electronics*, December, 1946, p. 158.

Variable-gain Amplifier as Power Source for Constant Light

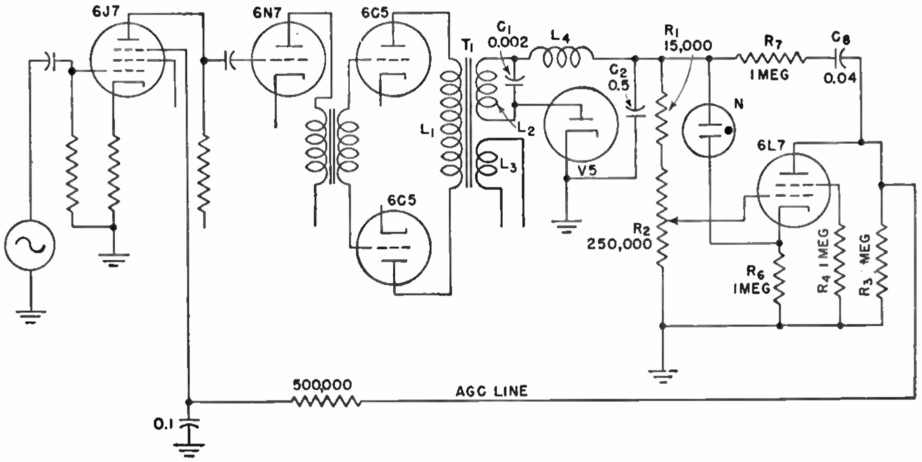

CONSTANT intensity of light from a lamp used as a light source in photoelectric equipment can be obtained by using an automatic gain-control system. The circuit shown employs this principle.

The lamp is excited from a low-voltage secondary winding of the output transformer T_1. An audio signal is fed into the input of the first audio amplifier tube. This is resistance-coupled into a driver tube. Since efficiency is desirable and only a single frequency is amplified, class B amplification is employed in the following stage. The circuit constants are designed for amplification and peak band pass at the one frequency.

Regulation is accomplished by a circuit that provides bias for the third grid of the input 6J7. The reference voltage is the drop across a ¼-watt neon bulb N. Voltage from the output transformer is properly matched to an exciter lamp and the differentiating circuit. For an 18-watt lamp, a 4-ohm secondary will properly match the impedance and is shown as L_3. Winding L_2 is a high-voltage secondary that supplies 300 volts to the output rectifier tube V_5. Inductor L_4 with C_1 and C_2 filter the d-c potential that appears across R_1 and R_2.

A negative potential is placed on the cathode of the 6L7 tube through the ¼-watt neon bulb N. Any change in plate current of the 6L7 appears as a voltage of negative polarity across R_3. This potential is applied through an RC filter with a time constant of 0.1 second to bias the third grid of the input to 6J7 to maintain a regulated output.

The voltage at which the circuit will hunt is dependent upon the setting of R_2. If there is 300 volts across R_1 and R_2, then across R_6 there will be 240 volts, since the neon bulb drops approximately 60 volts and maintains that fixed drop. If R_2 is set at negative 250 volts to ground, there will then exist tube potentials of 240 volts plate and screen supply and -10 volts on the control grid.

When a rise in line voltage or signal voltage occurs, there is greater power output. Suppose a 310-volt potential instead of 300 exists across R_1 and R_2. Since the drop across the neon bulb is constant at 60 volts, there will exist 250 volts between cathode and ground. The setting of R_2 places the divider network in a 5-to-1 ratio of resistance and the potential existing from grid to ground will equal ⅚ of 310, or 258.3 volts. This is 1.7 volts more positive on the grid than the original circuit potential. The 6L7 will then draw more current and cause a greater voltage drop across R_3, which will in turn place a more negative bias on the 6J7. Reduction and stabilization of the amplifier output are then accomplished and the output is restored to 300 volts across R_1 and R_2. Maintaining this output constant will regulate the exciter lamp voltage since the two circuits are coupled to the same primary.

This circuit will regulate within $\frac{1}{20}$ volt on signal variations of 3 to 10 volts and line-voltage variations between 90 and 130 volts. The frequency may range from 300 to 3,000 cycles per second on the signal grid.

Daniel Schulman, Power Supplies for Photoelectric Controls, *Electronics*, February, 1945, p. 177.

Half-wave Rectifier Circuit for Reclaiming Dry Batteries

THIS simple half-wave rectifier circuit for reclaiming flashlight cells and other dry batteries sends 150 milliamperes of direct current through a number of the cells in series for 4 hours or longer. The rejuvenation period varies with individual cells, with most cells returning to above normal voltage in 4 to 8 hours.

A voltage-stabilizing period of about 6 hours should be observed following the charging period, as a final check on the cell before returning it to service. This shelf period will also permit the cell to return to normal voltage and prevent the burning out of flashlight bulbs often experienced with freshly charged batteries.

It has been found possible to repeat the rejuvenation process and corresponding life cycle of the better grades of dry cells about four times. A few cells have been depolarized and reused more than 30 times in actual practice. Best results were from fresh new cells, expended over periods of about 2 weeks, reclaimed before they were entirely dead, and reused under similar conditions. Cells that are permitted to stand in a totally discharged condition for long periods can seldom be reclaimed.

Maurice E. Kennedy, Reclaiming Used Flashlight Batteries, *Electronics*, October, 1943, p. 148.

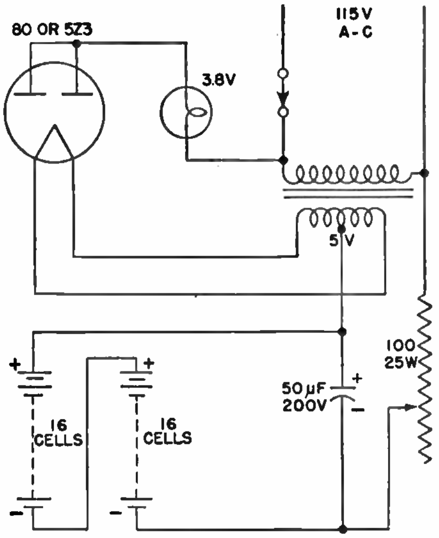

Variable B Voltage Supply Using a Tube as a Variable Resistance

Although variable transformers and resistance dividers can be used to provide a variety of output voltages from a power supply, certain applications dealing with vacuum tubes benefit from the use of the stepless variable source of voltage provided by an electronic tube.

Briefly, the principle involved is to employ a tube having a low plate resistance as a variable resistor, its value being varied by means of the grid bias to effect the desired control. In the diagram, a 6A5G is used as the resistance, which is varied from an equivalent value of 900 ohms to practically infinity by a change of bias from zero to −100 volts. The 2A3, 6A3, or 6B4G could be used in lieu of the 6A5G.

The cathode of the tube is above ground by the amount of the output voltage; hence a separate heater winding is required, which can be allowed to assume this potential. One tube of the type suggested is good for an output of 60 to 70 ma. Two or more tubes may be connected in parallel to handle more current. When tubes are paralleled, suppressor resistors must be placed in series with their grid leads to prevent parasitic oscillations. Anywhere from 50 to 500 ohms is satisfactory, but the resistors should be connected directly to the socket pins.

The bias for the control tube, or tubes, is provided by separate rectification with a type 6H6 tube. The cathode of diode T_1, being connected to one end of the main transformer, rectifies the peak negative swings. This rectified current charges capacitor C_1, and, passing through potentiometer R_1, provides the required bias. R_1 and C_1 act as a filter to smooth out the bias voltage. Ripple in this bias affects the plate current of the control tube and introduces ripple in the output voltage.

The values of R_1 and C_1 that are given introduce a 60-cycle ripple of 5 volts rms. At very light loads this ripple persists down to low d-c terminal voltages. If less ripple is required, a larger value of C_1 may be used, or the control tube may be placed between sections of the main filter. The peak voltage on the capacitor for the circuit shown is only 109 volts.

For potentiometer R_1 a linear taper is satisfactory. Some nominally linear potentiometers have considerable taper effect at both ends of the scale. These are particularly unsatisfactory for this application. The dissipation in this potentiometer will not exceed 1 watt if other quantities are approximately as shown; hence an ordinary receiver-type volume-control potentiometer can be used.

The current through potentiometer R_1 must return either through the control tube or the load. This current is in the reverse direction to the principal load current and tends to develop a small reverse voltage across the load when the control is turned down. This is remedied by finding a balance between R_1 and R_2 which is such that the control tube is never completely cut off. It will then pass enough current just to offset the bias current and bring the terminal voltage down to zero at the extreme setting of the control potentiometer.

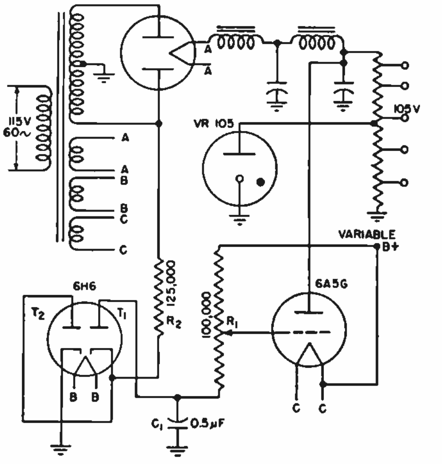

Where a supply with this type of control is used for vacuum-tube characteristic tests, it is convenient to provide a constant screen supply. This can be done by adding a voltage-regulator tube (VR105 or VR150) and connecting it with a suitable series resistor to a point ahead of the control tube. A separate output terminal must then be provided for connecting the screen circuit across the VR tube.

A. H. Brolly and J. L. Lahey, Variable B Voltage Supply for Lab or Classroom, *Electronics*, October, 1943, p. 156.

Cold-cathode Tubes in Electronic Ignition Circuit for Single Coil and Distributor

Here is an electronic ignition system designed for an engine having a single ignition coil and a single distributor. A 300-volt source is connected across the reservoir capacitor C_0 and bridged by the series-connected capacitors C_1 and C_2.

The junction point of the two impulse-generating capacitors C_1 and C_2 connects through the primary of the ignition coil to the interconnected cathode and anode of a pair of 631P1 tubes connected in series across the supply line. Interrupters I_1 and I_2, actuated by the cam in the distributor housing, successively place a positive bias on one of the grids in the two gas tubes, causing a primary discharge through T first in one direction and then the other as required by the circuit.

The 1-megohm resistor across C_1 ensures that C_2 will be charged to the full line potential when the apparatus is turned on after a period of inactivity, in which case the operation is as follows: As the cam rotates clockwise, contacts I_1 first separate, after which contacts I_2 close, placing a positive bias on the control element of V_2. This triggers off the discharge of capacitor C_2 through the primary, to which there is added the charge current of capacitor C_1 being readied for action on the next cycle. Upon the continuing rotation of the breaker cam, the contacts at I_2 are opened and those of I_1 close, firing V_1 and restoring the impulse capacitors to their original state ready to continue the operation.

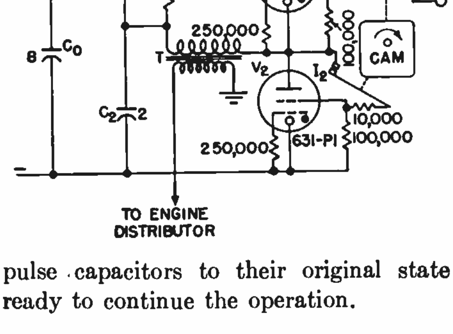

G. V. Eltgroth, Electronic Ignition Systems, *Electronics*, April, 1945, p. 106.

Ten-cycle Power Supply Using Tuning-fork Control of Impulse Frequency

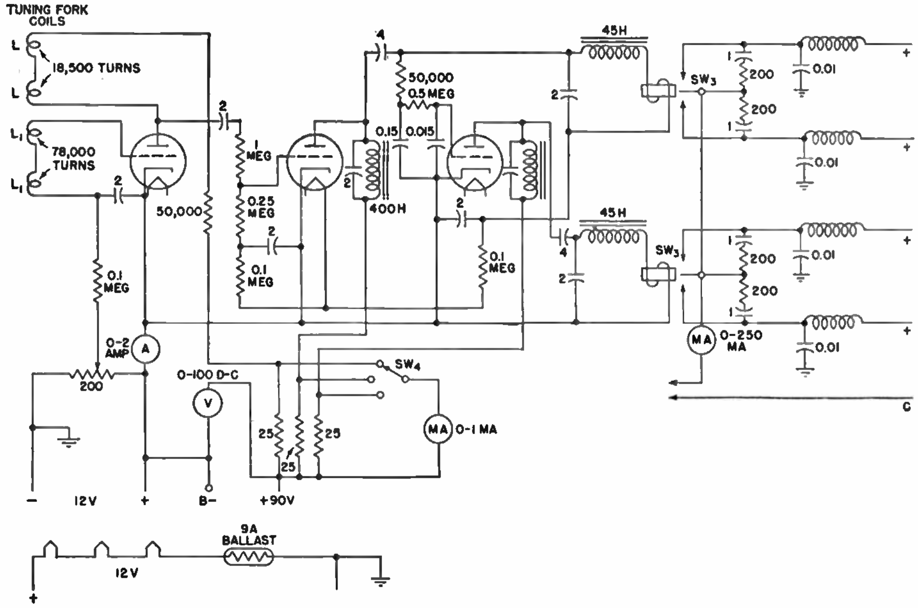

To obtain uniform drum speed for several drums in a seismograph, 10-cycle impulse power from storage batteries has been kept at constant frequency by tuning-fork control. The impulse-generating circuit makes use of W-E type 247A tubes as amplifiers.

Cylindrical iron lugs on the arms of the tuning fork project partly into the hollow centers of the coils and thus serve as cores. When tuning-fork vibrations cause the lugs to move relative to coils L_1, residual magnetism in the lugs induces a voltage in these two coils. This voltage will act on the grid of the first tube and be amplified, and the resulting plate current at the fork frequency will flow through coils L and keep the fork vibrating.

After further amplification, the plate current is used also to control two W-E type 209A polarized relay switches SW_3. These operate in quarter-phase time sequence, changing the storage battery current to 10-cycle quarter-phase impulse current suitable for operating a ¼-watt synchronous impulse motor. This motor in turn drives the recording drums through a train of gears terminating in an endless metal belt pulley system.

Film-recording Seismograph, *Electronics*, May, 1943, p. 89.

Cold-cathode Tubes in Electronic Ignition Circuit for Two Coils and Distributors

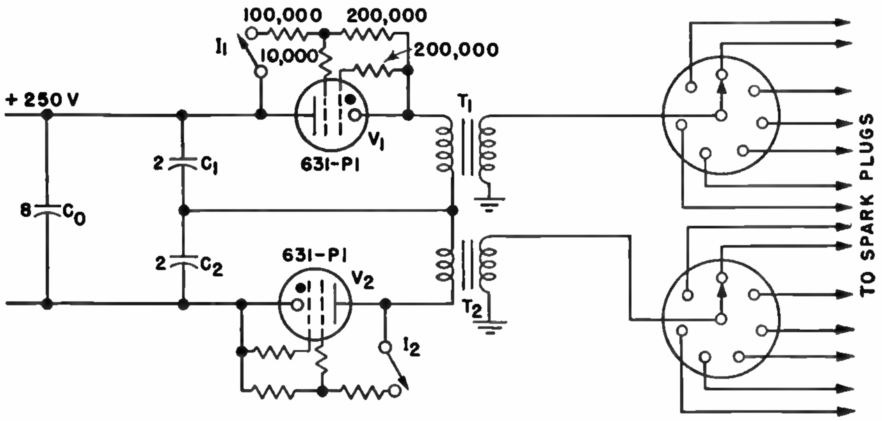

THIS electronic ignition system is designed for operation with two ignition coils working through two distributor heads. The two 631P1 tubes are symmetrically connected in the two supply lines leading to either end of the series-connected ignition-coil primaries. The center tap from the two primaries goes to the tap between capacitors C_1 and C_2. An interrupter I_1 closes, the positive potential on the control element fires V_1, connecting ignition coil T_1 across C_1 to discharge and charge C_2. On the next cycle of operation V_2 similarly fires, discharging C_2 and recharging C_1. The 631P1 is especially suited for this type of service as contrasted with hot-cathode types because of its very great surge-current-carrying capacity.

G. V. Eltgroth, Electronic Ignition Systems, *Electronics*, April, 1945, p. 106.

Full-wave Voltage Doubler for Transformerless Supply

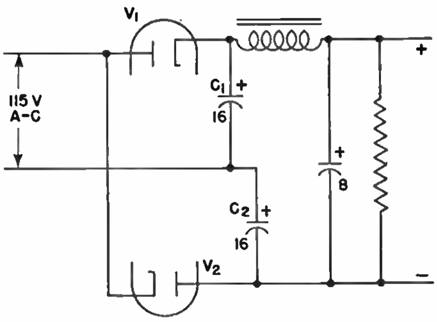

BOTH cycles of the a-c input from the line are rectified in this circuit. Greater output voltage and better regulation are provided than by a half-wave doubler. During the first half cycle of the a-c input, capacitor C_1 is charged to the peak value of the line through rectifier V_1. On the second alternation, capacitor C_2 is similarly charged through rectifier V_2. Each capacitor then acts as a storage unit in discharging through the load circuit, and each need withstand only the peak value of the line voltage. Frequency of the output ripple is 120 cycles because of the full-wave action. Neither side of the load circuit can be connected to ground, but this may be overcome by use of an isolation transformer in the line.

D. L. Waidelich, Voltage Multiplier Circuits, *Electronics*, May, 1941, p. 28.

Half-wave Voltage Doubler for Transformerless Supply

A POWER-SUPPLY system that provides a d-c output of about twice its input voltage is shown in the diagram. Two separate rectifiers are shown, but these may be a double-rectifier type tube, such as a 25Z6, or selenium rectifiers. One rectifier operates on half an input cycle to charge capacitor C_1. On the other half cycle, the capacitor discharges in series with the line voltage through the other (upper) rectifier to provide double the line voltage to the load. Rectified current flows to the load only on alternate cycles and the regulation of the system is not as good as with a full-wave voltage doubler. The main advantage of the circuit is that one side of the a-c line is common to the negative of the output circuit and hum difficulties are minimized.

At low values of output current, the output voltage is almost equal to twice the peak value of the a-c input. However, at high load current values, the output voltage is low. Capacitor C_1 must be rated to withstand the peak value of the line voltage, and capacitor C_2 is subjected to twice the line-voltage peak. The ripple voltage is 60 cycles.

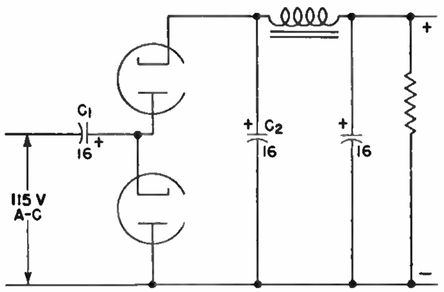

D. L. Waidelich, Voltage Multiplier Circuits, *Electronics*, May, 1941, p. 28.

Voltage Tripler for Transformerless Supply

COMBINATION of a half-wave doubler and an ordinary half-wave rectifier provides a voltage tripler that can be operated directly from the power line. As shown in the circuit, capacitor C_1 is charged to the peak value of the line voltage through rectifier V_2 during the first alternation of the input voltage. At the same time, capacitor C_3 is charged through rectifier V_3 to the same potential. On the second half cycle, the voltage across C_1 adds to the line voltage to charge capacitor C_2 through V_1 to almost twice the maximum value of line voltage. The d-c output voltage is the sum of the voltages of C_2 and C_3, about three times the peak line voltage.

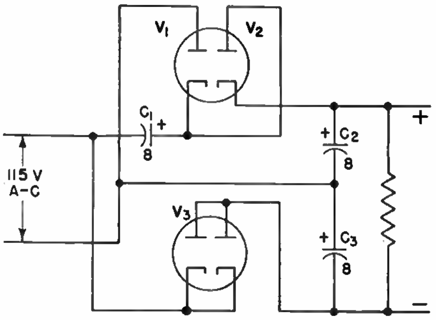

The ripple frequency is that of the line. Capacitors C_1 and C_3 must be chosen to withstand a potential equal to the peak line voltage and capacitor C_2 must handle twice that potential without breakdown.

D. L. Waidelich, Voltage Multiplier Circuits, *Electronics*, May, 1941, p. 28.

Voltage Quadrupler for Transformerless Supply

A VOLTAGE quadrupler can be formed from two half-wave doublers in series. During the first half cycle of alternating current, capacitor C_1 is charged to the line-voltage peak through V_2. For the second half cycle, the voltage across C_1 adds to the line voltage in order to charge C_2 through V_1 to practically twice the maximum value of the applied a-c voltage. The action of the lower half of the circuit is exactly the same as that of the upper half except that tubes V_1 and V_3 conduct during one half cycle while V_2 and V_4 conduct during the succeeding half cycle. The d-c output voltage will be the sum of the voltages across C_2 and C_4, and at light loads will be practically equal to four times the peak value of the line voltage. Capacitors C_1 and C_3 must withstand the peak of the a-c voltage, while C_2 and C_4 must withstand twice that voltage. The output voltage has a ripple frequency of 120 cycles.

D. L. Waidelich, Voltage Multiplier Circuits, *Electronics*, May, 1941, p. 28.

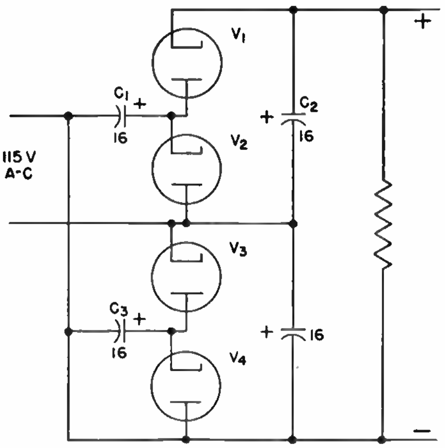

Obtaining 18 Volts Direct Current for Bias from 6.3-volt A-C Heater Supply

A SIMPLE built-in source of fixed bias voltage for audio pentodes and beam power tubes is shown. A double diode is connected as a half-wave voltage doubler and supplied with alternating current from the power-transformer heater winding that feeds other tubes in the amplifier. The output voltage depends upon the values of capacitor C and resistor R. With sufficiently large capacitance and high values of resistance, 18 volts of direct current for bias purposes can be obtained.

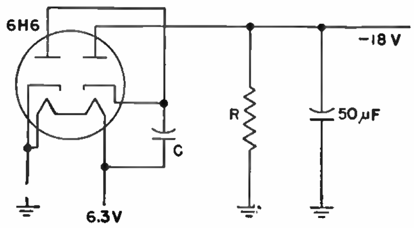

Howard T. Sterling, Use of Shunt Diode for Supplying Bias Voltage, *Electronics*, September, 1945, p. 218.

STROBOSCOPIC CIRCUITS

Strobotron Circuit Controlling Spark Coil for Starting Argon Flash Lamp

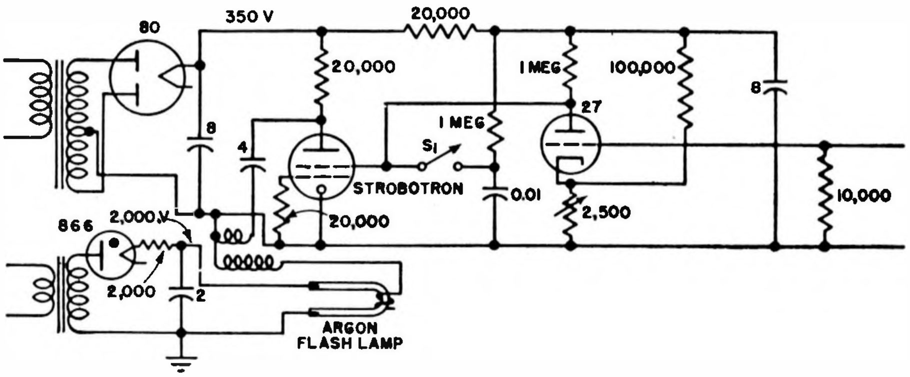

THE circuit shown has been used in an apparatus for recording data in an automatic wavelength comparator. A strobotron cold-cathode gas-filled control tube is turned on at the desired instant by an external contactor, or timer, acting through a simple d-c amplifier employing a type 27 triode. The strobotron in turn sends a surge of current through the primary of a spark coil, and the resulting high voltage across the secondary starts the argon stroboscope lamp. The result is a quick, intense flash of light as required for photographing a high-speed rotating counter that shows the wavelength of the spectral line. The counter wheel rotates at 1,000 rpm.

A negative surge at the grid of the type 27 amplifier tube increases the positive bias on the outer grid of the strobotron and turns it on at the instant a spectral line centers on a slit as the plate moves along. Either the voltage or the pressure of gas in the argon lamp is adjusted until the lamp does not flash by itself but is always flashed by the spark coil.

This circuit has also been applied to chronograph spark-recording apparatus. Here the output from the spark coil is connected directly to the marking electrodes that direct the spark through the moving waxed paper. Instantaneous control of the starting of the spark is thereby obtained without requiring an appreciable amount of electric power in the control circuit.

K. J. Germeshausen and H. E. Edgerton, The Strobotron, *Electronics*, February, 1937, p. 12.

Audio Amplifier Circuit for Stroboscopic Frequency Meter

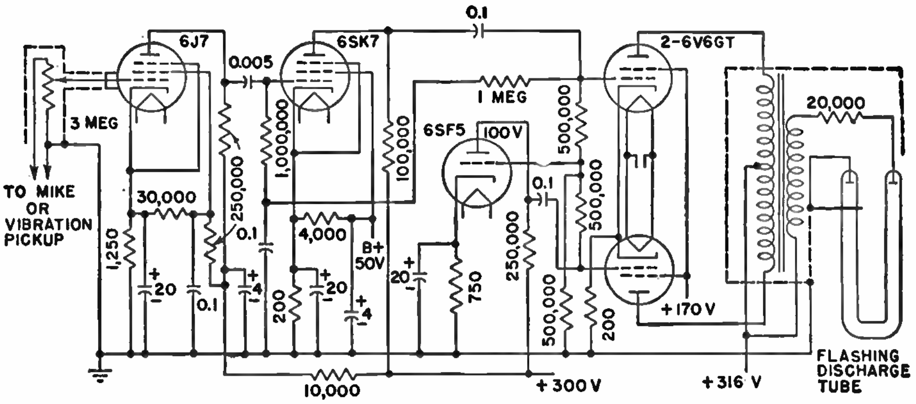

IN this amplifier circuit, the alternating quantity whose frequency is to be measured is converted into an audio signal by a microphone, vibration pickup, or other means, and is then amplified and fed to a special gaseous discharge tube that produces flashes of light at the audio rate involved. This light illuminates a series of 12 identical pattern disks, each rotating at a different determinable speed that is proportional to the frequency of a calibrated tuning fork in an electronic generator circuit which feeds a synchronous motor geared to the pattern disks. Each disk is imprinted with a pattern consisting of seven rings of alternate light and dark segments, with the inner ring having two segments and each other ring having twice as many as the preceding ring. The fork frequency is adjusted until one of the patterns on one of the wheels appears stationary due to stroboscopic effects. The frequency of the input signal can then be read on the dial.

The pickup device may be a crystal microphone, vibration pickup, rotating contactor, or any other device capable of delivering a signal of at least 1.5 millivolts to the input of the amplifier circuit. This amplifies the input signal sufficiently to actuate a U-shaped discharge tube that produces flashes of light at a rate corresponding to the frequency being measured.

Other applications include the original use as a chromatic stroboscope for testing intonation of wind instruments, tuning of pianos and organs, and investigating musical pitch, and industrial uses in checking speed of rotating objects, calibrating or checking tachometers, measuring natural frequencies of moving parts of engines, and calibrating oscillators, impulse generators, and similar equipment. The flashing amplifier and electronic generator circuits combined constitute essentially a logarithmic frequency meter of the stroboscopic type, capable of measuring the frequency of any sound, vibration, or a-f voltage directly in the logarithmic unit known as the semitone, or in cycles per second by referring to a suitable scale. The direct-reading range covers 32 to 4,000 cycles with 0.05 per cent accuracy.

Earle L. Kent, Precision Stroboscopic Frequency Meter, *Electronics*, September, 1943, p. 120.

Saw-tooth Relaxation Oscillator and Neon Lamp for Studying Moving Machinery

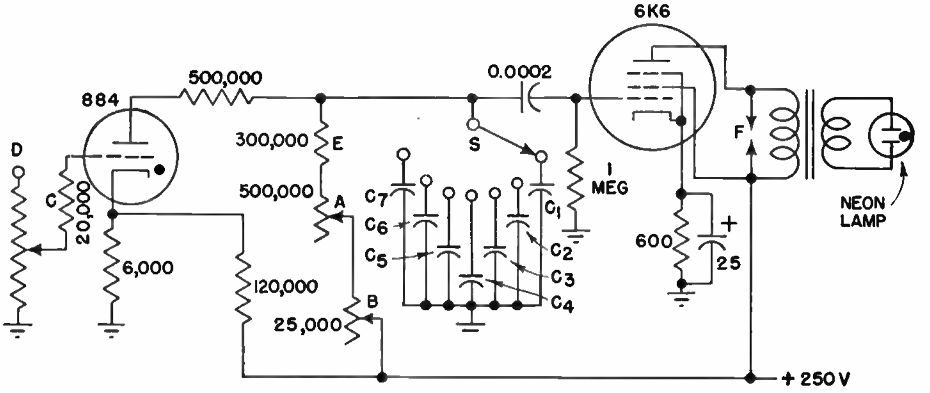

HERE is an inexpensive stroboscope using a conventional power pack which has a type 80 tube (not shown) and a relaxation oscillator which has a type 884 gas triode for generating a saw-tooth wave. The circuit is similar to that used for the sweep in some oscilloscopes.

In operation, one of capacitors C_1, C_2, etc., charges slowly from the B+ voltage through resistances *A*, *B*, and *E* to a voltage sufficiently high to cause the 884 tube to conduct. At this point of the cycle, the capacitor discharges rapidly through the tube until the tube ceases to conduct, whereupon the cycle is repeated.

The frequency of these oscillations depends on the value of the capacitor switched into the circuit by the switch *S* and the charging resistance controlled by rheostats *A* and *B*. Rheostat *A* is the coarse control for setting the approximate frequency and *B* is the fine control for setting the frequency more precisely and also for shifting the phase. Potentiometer *C* is used when required for synchronizing the oscillator with an external control connected at *D*; such a control might be a circuit with a mechanical interrupter on a rotating machine or an a-c source used to drive a synchronous motor or machine under observation.

A differentiating circuit is included, containing a 6K6 tube for converting the steep front of the saw-tooth wave into a sharp pulse of voltage for operating some form of gaseous tube that deionizes quickly. A small neon lamp, such as the GE type S14, is suitable, though other types of lamps may be brighter. It should be one that has no resistance in its base. To increase the brilliancy, the light may be concentrated by a condenser lens.

The lamp is coupled to the 6K6 tube by a stepdown transformer, such as an interstage type of about 3:1 ratio. Since the operation of the circuit, with the neon lamp disconnected, generates a high voltage across the transformer, it is desirable to protect it by a small spark gap *F*.

The stroboscope can be used as an electronic tachometer for measuring cyclic frequency, such as rotating or reciprocating speed. For this purpose, controls *S*, *A*, and *B* of the 884-tube oscillator circuit can be provided with dials and calibrated in frequency. The calibration can be made with the aid of an oscilloscope, using Lissajous patterns against a 60-cycle power line or other standard frequency. As the relaxation oscillator is rather unstable, such calibrations cannot be relied upon for great accuracy. For greater accuracy and stability, this stroboscope can be synchronized with an audio oscillator, using potentiometer *C*. The ranges of the controls are approximately as follows.

Switch position	*Capacitance, μf*	*Frequency, cps*
1	0.25	15– 30
2	0.1	30– 60
3	0.057	60– 120
4	0.03	120– 240
5	0.0145	180– 400
6	0.01	350– 650
7	0.0045	650–1,140

Robert C. Paine, A Simple Stroboscope for Moving Machinery, *Electronics*, December, 1944, p. 154.

Stroboscopic Test Circuit Employing Multivibrator and Type 1D21–631P1 Strobotron

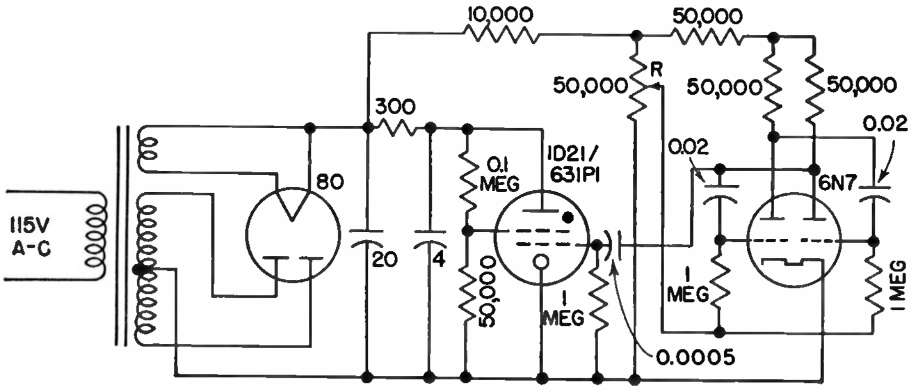

A MEDIUM-INTENSITY light source for stroboscopic applications is provided by this combination of a multivibrator, strobotron tube, and full-wave rectifier. The oscillation frequency is varied by changing the grid-bias voltage of the 6N7 by means of potentiometer *R*. The output signal of the multivibrator at the grid of the strobotron is in the form of a sharp negative pulse. This ensures that the time interval between strobotron flashes will be substantially independent of variations which may occur in circuit or tube constants.

The 1D21/631P1 is essentially a double-grid cold-cathode gaseous discharge tube capable of peak anode currents as high as 300 to 400 amperes under favorable duty-cycle conditions.

A peak cathode current of approximately 5 amperes is necessary for formation of the cathode spot and the resulting brilliant arc-type discharge. Best results for high-current operation are to be expected when the circuit constants are proportioned to give peak cathode currents of from 10 to 200 amperes, at an average anode current of 50 ma or less. The plate voltage should not exceed 350 volts direct current. Repetition rates up to 250 pulses per second may be reached, with some deterioration in life at the higher values.

R. C. Hilliard, Gaseous Discharge Tubes and Applications, *Electronics*, March, 1946, p. 122.

Stroboscope Circuit Using Cooper-Hewitt Lamp with Combination Timer and Power Pack

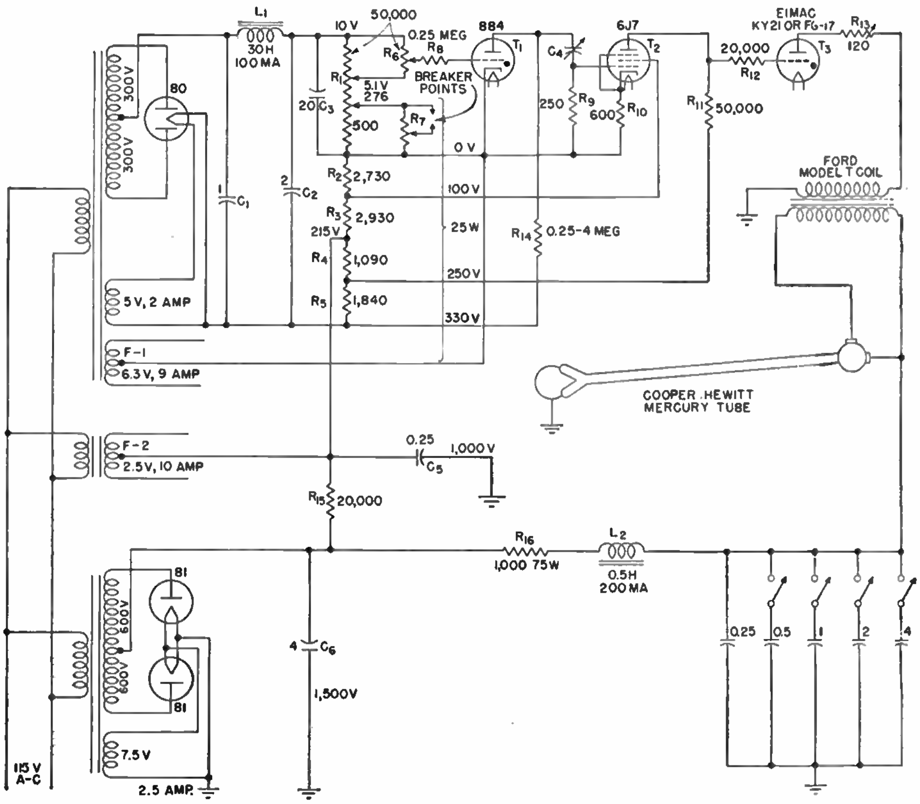

This practical stroboscope circuit, useful for industrial studies of high-speed motion, can be made to flash at frequencies between 17 cycles and 18,000 cycles per minute.

The source of light is a Cooper-Hewitt mercury-vapor lamp.[1] There is no need of securing a new one, since a tube that has been retired from regular illuminating service because of difficulty in starting will fire satisfactorily in this circuit.

The power supply shown will deliver 800 volts to the capacitors at about 170 ma. This amount of power is sufficient for average work, and it can be increased as desired for more intense illumination.

An independent power supply was used for the timing circuit to eliminate as much as possible the surge effects that result if the main power unit is used. The timing itself is accomplished with a relaxation oscillator similar to the saw-tooth generator of a cathode-ray oscilloscope. C_4 in the grid circuit of T_2 is charged through R_{14} from the voltage divider to a voltage determined by the grid bias of the 884 tube (T_1) minus the drop across T_1. This drop is constant during conduction at approximately 16 volts.

The voltage developed across R_9 is applied to the grid of T_2, a 6J7. When T_1 is nonconducting during the charging cycle of C_4, the only bias on T_2 is produced by R_{10}. This is simply to limit the current through the tube to a reasonable value. During the discharge of C_4 through T_1, the grid of T_2 is carried negative well beyond cutoff and conduction ceases. The voltage developed across R_{11} is applied to the grid of T_3 and will keep that tube nonconducting.

As T_2 goes beyond cutoff, the grid of T_3 goes 25 volts positive with respect to its cathode. This allows T_3 to ionize and to discharge C_5 through the Ford coil. The sudden surge of current in the primary develops an extremely high voltage in the secondary. This appears as an electrostatic potential between the mercury and shield of the Cooper-Hewitt tube. This high potential, in the neighborhood of 10,000 volts, ionizes the mercury vapor in its corner of the tube. As soon as free electrons are available, the power supply across the two ends of the tube causes further ionization and the bank discharges through the Cooper-Hewitt, giving a brilliant light of extremely short duration.

For the grid of T_3 to regain control of the tube when C_5 is discharged, it must be negative soon after ionization is complete. For this reason the discharge time of C_4 must be held to a minimum, limited only by the ionization time of T_3. In most tubes of the FG17 type ionization is complete in from 10 to 15 microseconds. The values shown will give a minimum discharge time for C_4 of 20 microseconds.

Potentiometer R_6 can be put at the end of a three-wire cable, and is used to control the speed of flash over a range of 2 to 1 for any setting of C_4 and R_{14}. The cable must be shielded or the stroboscope will flash at multiples of 60 cps due to external fields.

R_7 is used as an external synchronizing device. The breaker points across one section of it may be made from an old automobile distributor and driven at the speed at which the flashing is desired. If the amount of synchronization is kept low by having the breaker points short out only a small portion of the resistance of R_7, any multiple, or submultiple, rate may be used.

The layout of the chassis should be such that as little as possible of the magnetic fields of the transformers cut the two thyratrons. If desired, magnetic shielding may be employed. If T_3 is exposed to a 60-cps field, the arc within the tube is blown back and forth as its timing passes in and out of phase when firing near the natural fundamental frequency.

R_{13} is used to limit the voltage in the secondary of the high-tension coil. At low frequencies it is apt to spark across the exposed portion of the tube. The cable leads from the power supply to the mercury tube should be heavy. Any appreciable amount of resistance here will lengthen the duration of the flash and reduce its brilliancy.

R_{16} and L_2 are used to keep C_6 from discharging through the mercury tube, and allow its arc to be extinguished when the voltage of C_7 has fallen below the tube drop of approximately 75 volts.

If the high-tension transformer is to be cased, it should be done with a nonconducting material, such as Bakelite or hard rubber, since a metallic case will represent a shorted turn and impair correct operation.

Since the application of plate voltage to T_3 before the cathode has reached its temperature impairs the life of the tube, a switch or time-delay relay should be incorporated in the plate switch.

The power supply of this device is dangerous and can be fatal; hence all high-voltage wiring should be adequately insulated.

---

[1] C. C. Street, A Practical Stroboscope Circuit, *Electronics*, April, 1940, p. 36.

Stroboscope Circuit Producing One Flash per Supply Voltage Cycle

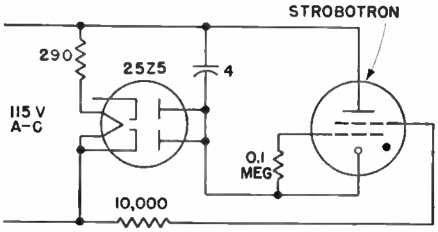

THE simple circuit shown will produce 60 flashes per second when operated from a standard 60-cycle power line. During the half cycle that the rectifier charges the capacitor, the grid-bias voltages on the strobotron cold-cathode gas-filled control tube are such as to prevent starting. On the other half of the cycle, however, the inverse voltage across the rectifier is applied to the outer grid and reaches the critical starting potential at a given part of the a-c voltage wave. Applications of this circuit include measuring the slip of induction motors and the power angle of synchronous motors.

E. J. Germeshausen and H. E. Edgerton, The Strobotron, *Electronics*, February, 1937, p. 12

Stroboscopic Circuit for Visual Representation of Electrical Vectors

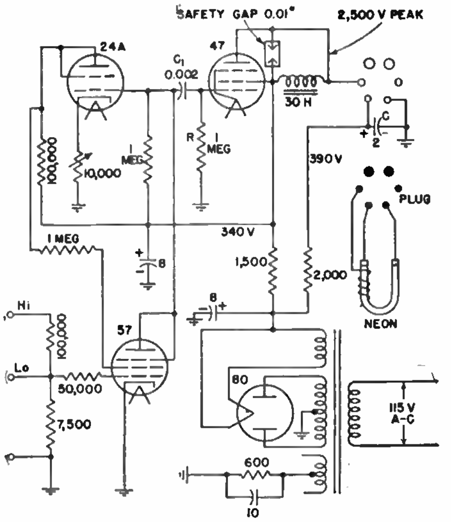

FOR visual demonstrations of vectors representing electrical quantities, this circuit provides a light flashing 60 times a second for illumination of a 3,600-rpm disk on which an arrow vector is painted. The instant of flash is determined by the phase of the end of the negative half cycle of the electrical quantity fed to the input of the circuit.

The input network is arranged to provide for two voltage ranges, 40 volts and 500 volts. The resistor in the grid lead of the first tube protects the grid during positive pulses by limiting the current to a safe value. The first two tubes are connected to provide trigger operation when acted upon by ¾ volt rms. The input sensitivity, including polarity sensitivity, is adjusted by the 24A cathode resistor.

The output derived at the plate of the 57 is nearly a perfect square-wave voltage swinging between -2 and -32 volts. When applied through C_1 and R, the square wave produces steep positive and negative pulses of approximately 20 volts amplitude on the grid of the output tube.

The output stage is a conventional a-f output circuit with an inductance comprising the load. It is advisable to connect the plate to the outer terminal and to provide extra insulation of strip mica between the outside of coil and core. On the steep negative pulse to this stage, most of the plate current is cut off and the resultant surge across the reactor reaches a value approximating 2,500 volts.

The light source consists of a neon tube whose diameter and pressure are standard for display purposes. The distance between electrodes is 12 inches; this will vary depending on the supply voltage, 25 volts per inch being approximately optimum. Magnet wire is coiled on the outside of the tube to act as a capacitive firing electrode. This tube can be made to order by local sign makers. Avoid the use of fluorescent-type tubing.

Of importance in the circuit is the gap connected in shunt with the output reactor. Set at approximately ten thousandths of an inch, it protects the tube elements, socket, wiring, and reactor insulation from flashover.

The discharge capacitor C and resistor R must have an RC value that will provide for adequate charging between firing pulses. If a more intense flash is required, the capacitor may be doubled and the resistor halved.

Adjustment of the circuit must not be attempted until at least 1 minute has elapsed to permit the tubes to warm up. The rheostat in the cathode circuit of the 24A tube is first reduced to almost zero resistance, then slowly increased until a flash occurs in the neon tube. When set in this manner the circuit is cocked by the negative pulse and fired when this voltage returns to zero.

This can be checked by applying voltage from a dry cell; positive polarity to the grid should have no effect, while negative polarity should cock the circuit and firing should occur when the voltage is withdrawn. Acting at the instant when the negative half cycle becomes zero, the circuit is independent of wave shape and voltage amplitude over a great range. This makes it adaptable for phase determination.

Methods of applying various quantities to the input depend upon the problem at hand. For the application of currents, shunts must be used that will provide approximately 2 volts. Magnetic fields may be explored by means of air-core coils.

Lawrence G. Betz, The Vectorscope, *Electronics*, February, 1944, p. 168.

Glow-modulator-tube Circuit for Varying Light Output Linearly with Current

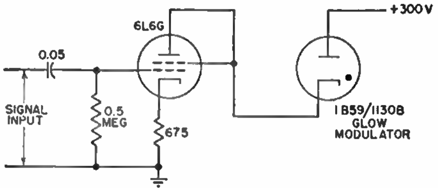

PRACTICALLY any application requiring an essentially linear relationship between current and light output can be served by this simple circuit utilizing a crater-type 1B59/1130B glow modulator tube. With an operating voltage of 140 volts maximum and operating current of 5 to 35 amperes, a high ionization density is obtained which, viewed in depth, gives high-intensity light output. The modulating frequency range is 15 to 15,000 cycles, and the useful light range is 3,500 to 6,500 angstrom units. Possible applications of the circuit include facsimile recording, sound on film, oscillograph timing markers, photoelectric counters, seismograph recorders, and stroboscopic devices.

R. C. Hilliard, Gaseous Discharge Tubes and Applications, *Electronics*, March, 1946, p. 122.

Voltage-doubler Power Supply for Electroflash Lamp

This capacitor-charging circuit provides high-voltage energy to operate the Sylvania type R4330 and similar high-speed flash lamps providing sufficient light intensity for use with ordinary cameras. The power supply consists of a relatively high-voltage transformer, two rectifier tubes connected as voltage doublers, and a large capacitor. The flash gun consists of the tube, a voltage-divider unit, ignition coil, and switch. The 30-μf storage capacitor becomes charged to the operating voltage, approximately 2,500 volts, but this cannot discharge through the tube until the discharge is initiated by the ignition coil.

To start the discharge, the 10-μf capacitor is discharged through the primary of the coil to produce a sharp peak of about 15,000 volts that ionizes the gas and allows the 30-μf capacitor to discharge almost instantaneously, producing a very intense blue-white light. The capacitor charges up quickly enough to allow a maximum flashing rate of 6 per minute.

The safety switch shorts the capacitor when the unit is taken out of its case for any reason. Construction and use of apparatus call for observation of all common safety precautions since lethal voltages are present. The bleeder resistors will completely discharge the capacitors in about an hour; therefore this much time should elapse before replacing a flash tube or otherwise working on the unit.

The power transformer has one filament winding that is 2,500 volts above ground; hence this winding should be tested at 6,000 volts to ground for 1 minute for a standard breakdown test. The ignition transformer is a special part also, similar to the 15,000-volt peak transformers used in some electric fence units. Ignition coils of model airplane engines may prove suitable also.

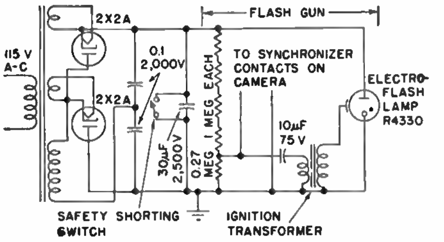

Circuit Data on Electroflash Unit, *Sylvania News Tech. Section*, July, 1946.

Adjustable-frequency Stroboscope Circuit Using Cold-cathode Gas-filled Control Tube

A simple stroboscope circuit that can be varied in frequency until synchronous with the moving parts to be inspected is given here. The flashing tube used as the source of illumination for stop-motion effects is a strobotron, which is basically a cold-cathode gas-filled control tube. A flash of light is produced each time the 4-μf capacitor is discharged through the strobotron. Control of the flashing rate is effected by impulses from the relaxation oscillator.

A negative potential is suddenly impressed on the inner grid of the strobotron when the left tube in the oscillator begins to conduct current in the course of the oscillation cycle. The potential difference between the inner grid and the outer grid at this moment exceeds the starting potential, and the strobotron flashes. The frequency of oscillation is controlled by the potentiometer. Changes of scale are achieved by changing the circuit constants in the grid circuits of the oscillator. With C_5 as 0.02 μf, the range of frequency is approximately 10 to 60 cycles per second; with C_5 as 0.005 μf, the range is 40 to 240 cycles.

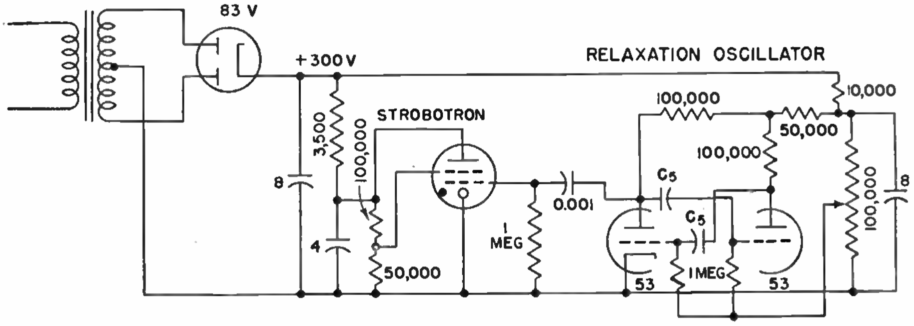

K. J. Germeshausen and H. E. Edgerton, The Strobotron, *Electronics*, February, 1937, p. 12.

Push-pull Output Circuit for Driving Two Type R1130B Modulator Glow Lamps

In this elementary push-pull output circuit for driving crater-type modulator glow lamps, the degenerative action of the amplifier tubes provides a lamp current that varies linearly with signal voltage regardless of variations in lamp impedance. Applications include facsimile recording, oscillograph timing markers, stroboscopic devices, seismic recorders, photoelectric counters, and other instruments where a high-intensity modulated point source of light is required.

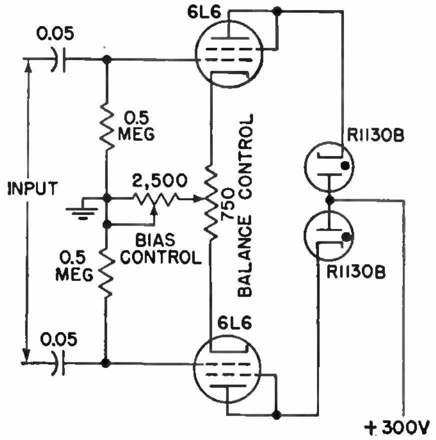

R. C. Hilliard, Gaseous Discharge Tubes and Applications, *Electronics*, March, 1946, p. 122.

Stroboscopic Light Source for Demonstrations at Line Frequency or Subharmonics

THIS simple stroboscopic light source, developed for demonstration of standing-wave patterns of electrons in motion by viewing dot patterns on a rotating phonograph turntable, provides flashes at the 60-cycle power-line frequency or at 20-and 30-cycle subharmonics thereof.

The two 25-watt lamps serve merely as resistors, and should be covered to prevent their light from interfering with the demonstrations. The type 631P1 cold-cathode strobotron tube is the same as that used in the General Radio Strobotac.

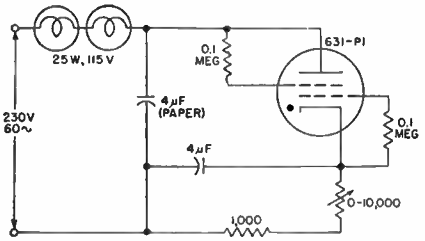

The strobotron tube emits the flashes of light. The frequency can be made 60, 30, or 20 by adjusting the 10,000-ohm variable resistance. This arrangement has proved especially useful for obtaining subharmonics of the line frequency.

J. F. Kline, Stroboscopic Depiction of Electron Motion on Transmission Lines, *Electronics*, June, 1945, p. 258.

TELEMETERING CIRCUITS

Electronically Powered Servo System for Measuring and Remotely Displaying Fuel Flow

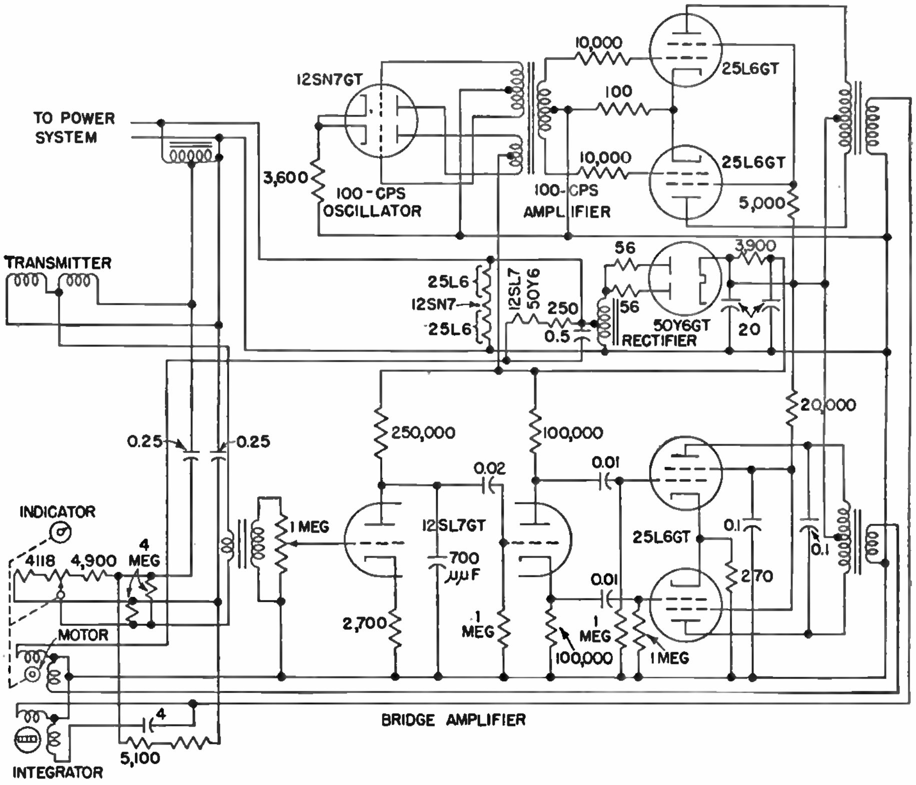

This electronic fuel-flow meter and integrator circuit, developed for accurate measurement of fuel consumption on large aircraft and remote indication thereof on the pilot's instrument panel, uses an electronic servo to transmit the position of an aircraft fuel-flow valve to a remote indicator. A mechanical integrator combines this information with impulses from a 100-cycle time standard to totalize the liquid flow. The system is applicable also to many industrial telemetering problems.

The mechanical motion of the fuel-flow transmitter is used to operate an inductance element of a resistance-balanced inductance bridge. The electric output of the bridge excites an electronic amplifier which supplies power to a small two-phase induction motor which balances the bridge by varying the resistance elements. The indicating hands are geared to this resistance element, the position of which is a function of the inductance position and therefore of the flow of fuel through the transmitter.

A stabilized 100-cycle oscillator is employed to power a small synchronous motor, which in turn acts as the constant-speed drive for the mechanical integrator.

The mechanical integrator is the conventional picker type, wherein a ratchet pawl is driven at constant speed by the synchronous motor around a ratchet wheel that has a suitable number of teeth for the accuracy required. The number of teeth that the pawl picks up on each rotation is a function of the fuel flow, so that the resulting rotation of the ratchet wheel may be geared to a suitable counter to indicate the total fuel consumed.

Special care is taken to ensure that the bridge is balanced for the fundamental at all portions of the scale, to ensure freedom from errors due to fundamental phase shifts arising from temperature changes. The bridge permits three-wire connection to the transmitter mounted on the engines. It also uses as the balancing element a precision potentiometer which can be wound to any desired curve to provide the exactly linear scale which is required when a sweep pointer and integrator are used.

The calibration accuracy of this instrument is within 10 pounds of fuel flow per hour everywhere on the scale, all points of which are within one dial graduation. The totalizer performs well, being adjusted to compensate partly for the small errors of the meter itself. Over-all errors throughout the cruising range are thus much less than 1 per cent.

David W. Moore, Jr., Fuel Consumption Indicator, *Electronics*, March, 1946, p. 152.

Induction Receiver for Remote Control

This long-wave receiver circuit employing a single cold-cathode type tube affords a cheap, simple, reliable, and rugged means for remote control of a motor-operated garage door, gate, or similar device from a desirably limited control radius of about 10 feet. The actuating signal can come from any simple low-power transmitter (1 to 5 watts) in an automobile employing a frequency in the order of 10 to 100 kc and feeding a transmitting loop mounted under the car.

The low-impedance receiving loop may be buried in the approach driveway, and coupled through a 4- to 8-ohm line and a conventional line-to-grid transformer to the starter anode of a type 1C21 or 0A4G cold-cathode tube, as shown by the solid lines to the transformer. Alternatively, a line-to-grid transformer having a 500-ohm primary winding tapped at 4 to 8 ohms may be used, with the tuning capacitor shunting the primary as shown by dotted lines and the loop connected to the low-impedance section. Standby power consumption is only the quarter watt or so dissipated by the voltage divider.

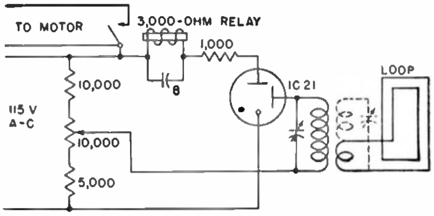

R. C. Rowe, Radio Door Actuator, *Electronic Industries*, September. 1945, p. 96.

Transmitter Operates from A-C Line for Remote Control of Toy Trains

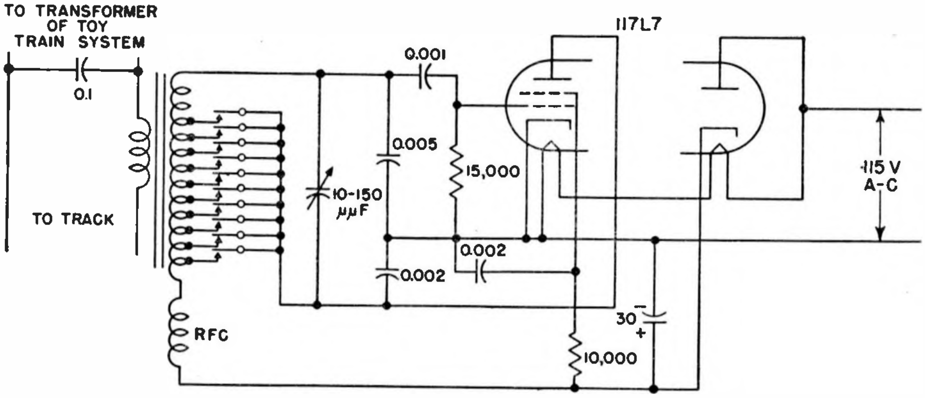

This transmitter circuit develops 1 watt of power at any of 10 different frequencies in the range from 220 to 360 kc when operated directly from the 115-volt a-c line without a power transformer, as required for electronic remote control of model railroad systems. This power is ample to actuate simple receiver units on the cars of the toy trains, consisting merely of a single r-f series tuned circuit, two metallic rectifier buttons, and a 500-ohm relay operating reliably on 6 milliwatts. The r-f transmitter output is superimposed directly on the train power circuit to give a wired wireless system, as shown. The low-voltage winding of the toy-train transformer acts as an r-f choke, and it is effectively bypassed by a 0.1-μf capacitor.

While oscillating circuits that are not crystal-controlled are ordinarily considered unstable, it was found that by proper selection of circuit constants frequency is maintained within 0.1 per cent. To achieve this result the tank-circuit mica capacitors, selected within 3 per cent tolerance, are shunted by a trimmer for accurate setting under load of the final frequency value. These capacitors, as well as the receiver capacitor, receive class C RMA treatment to prevent drift due to aging. The tapped oscillator tank coil is wound on a machine-threaded phenolic tube, the outside diameter of which is maintained within 0.2 per cent tolerance.

These precautions have resulted in transmitter stability that is well within the required limits of accuracy. Variation of line voltage from 90 to 125 volts has a scarcely perceptible effect, causing a frequency drift of less than 30 cycles. Variations in transmitter load from open circuit up to maximum of 10 ohms shift the frequency not quite 400 cycles from its normal operating adjustment. Frequency drift due to changes in normal ambient temperature is negligible.

Transmitter output distribution is relatively flat over the entire transmitter range even under maximum track loading. Since the vacuum-tube plate voltage is applied only when the transmitter is in actual operation, the normal life of 500 hours is extended considerably. Interchanging tubes has negligible effect upon the transmitter frequency because of the large circuit capacitances.

Ten taps on the oscillator tank coil, each connected to a separate contact button on the control panel, provide 10 fixed operating frequencies in steps varying geometrically from 11.3 to 18.7 kc.

Joseph L. Bonanno, Electronic Toy-train Controls, *Electronics*, February, 1947, p. 94.

Frequency-modulated Receiver and Control Circuits for Radio Control of Model Battleship

The accompanying full-page diagram gives the receiver circuit used with an f-m transmitter circuit for complete remote radio control of a model battleship. The control and voice signals are received on the model craft with a modified National FB7 receiver having a Foster-Seeley discriminator in the output of the i-f amplifier.

In the discriminator output the three types of control signals are separated from each other. The subcarrier and a-f components of the discriminator output are amplified by a pair of pentode amplifiers with their grids connected in parallel. One of these tubes has a dynamic loudspeaker connected in its plate circuit, and the other feeds a bank of five tuned circuits, each circuit tuned to one of the five subcarrier frequencies. Each of these tuned circuits feeds a triode biased beyond cutoff, functioning as an overbiased plate detector. Each triode has a sensitive relay connected in its output. The sensitive relays connected in the output of the 300- and 650-cycle channels operate a pair of mechanically interlocked relays that control the main drive motor. The mechanical interlock prevents the short circuit that would result if both the forward and reverse relays were accidentally turned on at the same time. Similarly the 1,390- and 3,000-cycle channels operate through a pair of mechanically interlocked relays to control turret rotation. Maximum turret excursion is controlled by limit switches.

The sensitive relay in the output of the 950-cycle channel is used to advance a stepping switch. The stepping switch consists of a magnetically operated pawl and ratchet mechanism that advances a pair of ganged but electrically isolated wiping contacts. Each contact is moved forward by the ratchet mechanism over a series of 10 contacts. The ratchet stop mechanism may be released, when desired, by a second magnet, allowing a spring to return the wipers to a zero or homed position. In this case the relay controlling the homing action is actuated by interrupting the carrier.

The actions controlled by the stepping switch and associated circuits are as follows:

Switch Position, Home	*Action Controlled*
0	
1	Disconnect subcarrier-controlled channels and connect loudspeaker
2	Fire first secondary gun
3	Fire second secondary gun
4	Fire third secondary gun
5	Fire fourth secondary gun
6	Fire forward turret
7	Fire second turret
8	Fire third turret
9	Fire aft turret
10	Turn on indicator light

The two stepping switch wipers are fed independently. The feed of wiper *A* is directly from the battery, but wiper *B* is fed from the battery through the back contact of a slow-release relay. The coil circuit of this slow-release relay is opened for the duration of each 950-cycle control signal by a pair of contacts held open by the pawl mechanism of the stepping switch. If the pawl is held down for more than half a second, the slow-release relay feeds current through its back contacts to the *B* bank of wipers and, hence, on to the circuit of the contact on which the wipers are resting. Thus, to energize any one of the circuits controlled by bank *B* of the stepping switch requires not only that the wipers be moved to the appropriate position, but that the final impulse used to move the wiper actually into position be more than a half-second duration.

For an example, suppose it is desired to move the wipers from the zero position to position 3. The operator sends two short impulses and then maintains the third for more than half a second. In practice the last impulse is maintained until the gun fires.

The loudspeaker relay is operated by the No. 1 contact on bank *B* and is electrically locked in place by a feed from the No. 1 contact on bank *A*. If the stepping switch is in the Homed position, a long pulse will move the wipers to position and operate the loudspeaker relay first. The loudspeaker is then connected, and the five tuned channels are disconnected. The loudspeaker is kept on by the electrical lock-in, despite the fact that the 950-cycle channel which controls selector advance is disconnected by the action of the loudspeaker relay.

With the loudspeaker connected, the operator may transmit speech and other frequencies simulating shipboard sounds without tripping the subcarrier-controlled channels. When the stepping switch is homed, the electrical lock feed through No. 1 contact of bank *A* is broken, allowing the loudspeaker relay to return to normal position. The loudspeaker is disconnected, and control of the subcarrier-operated channels is restored.

The sensitive relay controlling the homing action is fed from a triode that is normally maintained beyond cutoff by a negative potential picked from one leg of the discriminator. When the carrier is cut, the negative potential is removed and plate current flows. The sensitive relay is closed by the plate current, and its contacts operate the solenoid homing the stepping switch. A lamp connected to the contacts of this relay indicates when the carrier is off. The contacts of the sensitive relay also energize the coil of the power relay whose contacts break the main drive-motor feed for the duration of carrier interruption. This action is not objectionable, since only a momentary break is needed to home the selector. The circuit supplies a simple automatic stop in the event of transmitter failure.

Contact 10 on bank *A* turns on a small indicator light that is most used with loaded guns. So long as the operator can see the small indicator lamp burning at the masthead, he knows that the selector is at the end of its travel and that it is not resting on any of the gun circuits. When the operator is ready to fire the guns, the selector is homed and then advanced at once to the gun circuit to be fired. When the circuit operates, the selector is at once advanced again to position 10 to minimize the possibility of accidentally firing a gun, unless the operator wishes to fire another bank of guns immediately.

The rudder-control circuit differs fundamentally from the other controls in that it permits precise positioning of a remote unit by the control operator. This precise positioning is accomplished by deviating the mean carrier frequency of the transmitter and incorporating a motor-driven frequency-control unit in the receiver, which automatically tunes the receiver to each new frequency selected by the operator of the transmitter. The same motor that retunes the receiver also drives the rudder. Therefore, within limitations imposed by the sensitivity of the equipment, there is a discrete rudder position for each carrier frequency selected.

The d-c component of the discriminator output provides the cues for the operation of the automatic-frequency-control unit. If the receiver is tuned precisely to the frequency emitted by the transmitter, the average output of the discriminator is zero. If the receiver is tuned to a higher frequency than the transmitter, then the average output of the discriminator is negative, and if the receiver is tuned to a lower frequency than the transmitter, the average discriminator output will be positive.

This d-c component of the discriminator output is separated from the subcarriers by a low-pass filter, and is then injected into a polarity-sensitive amplifying system with a pair of sensitive relays in its output. One of these sensitive relays is tripped when a positive potential is applied by the discriminator, and the other is tripped by a negative potential.

The sensitive relay operated by a negative potential operates a power relay that causes the steering motor to rotate in such a direction as to increase the capacitances in the receiving circuits. This action steadily reduces the frequency to which the receiver is tuned, until the receiver is once more in alignment with the transmitter (until the discriminator output falls to zero). This rotation also turns the rudder to port. The sensitive relay controlled by positive potentials from the discriminator causes motor rotation, which decreases the capacitances in the receiver circuits and conversely causes the rudder to turn to starboard. Thus the transmitted frequency controls the position of the rudder and the frequency to which the receiver is tuned.

Electrodynamic braking is used to prevent overtravel of the steering motor and to minimize the possibility of hunting.

Sensitivities are so adjusted that a minimum change of approximately 300 cycles is needed to produce a change in rudder position. This 300-cycle dead zone is adequate for the electrodynamically braked motor to stop, makes it unnecessary to resort to more elaborate antihunt arrangements, and provides about 30 discrete rudder positions.

The polarity-selective amplifier circuit mentioned in connection with the rudder system merits some special consideration. Basically, it consists of a special balanced modulator input, single-stage amplifier, and double polarity-sensitive output stage, the whole so adjusted that plate current flows in one output tube when a positive signal is applied to the input grid and in the other output tube when a negative signal is applied to the input grid.

The balanced modulator converts the d-c input signals into a proportionate a-c signal that is more conveniently amplified and, in addition, indicates the polarity of the input signal by the phase of the a-c output. The balanced modulator as used differs from the conventional balanced modulator circuit in that an input signal is injected into only one of the input grids, and only alternating current is applied to the modulator plate circuit to reduce the number of components necessary in the modulator stage.

The grid not used for signal injection serves to balance the modulator. The modulator is balanced with zero input. The potentiometer connected to the balancing grid is adjusted to the point producing minimum modulator output. If the point of minimum output lies at either extreme of the potentiometer, the modulator tubes are reversed in their sockets and the potentiometer is again adjusted for minimum output. With the modulator thus properly adjusted, positive input to the modulator grid will cause an output signal of one phase, and a negative input will cause an output signal differing in phase by 180 degrees.

The modulator output is amplified by

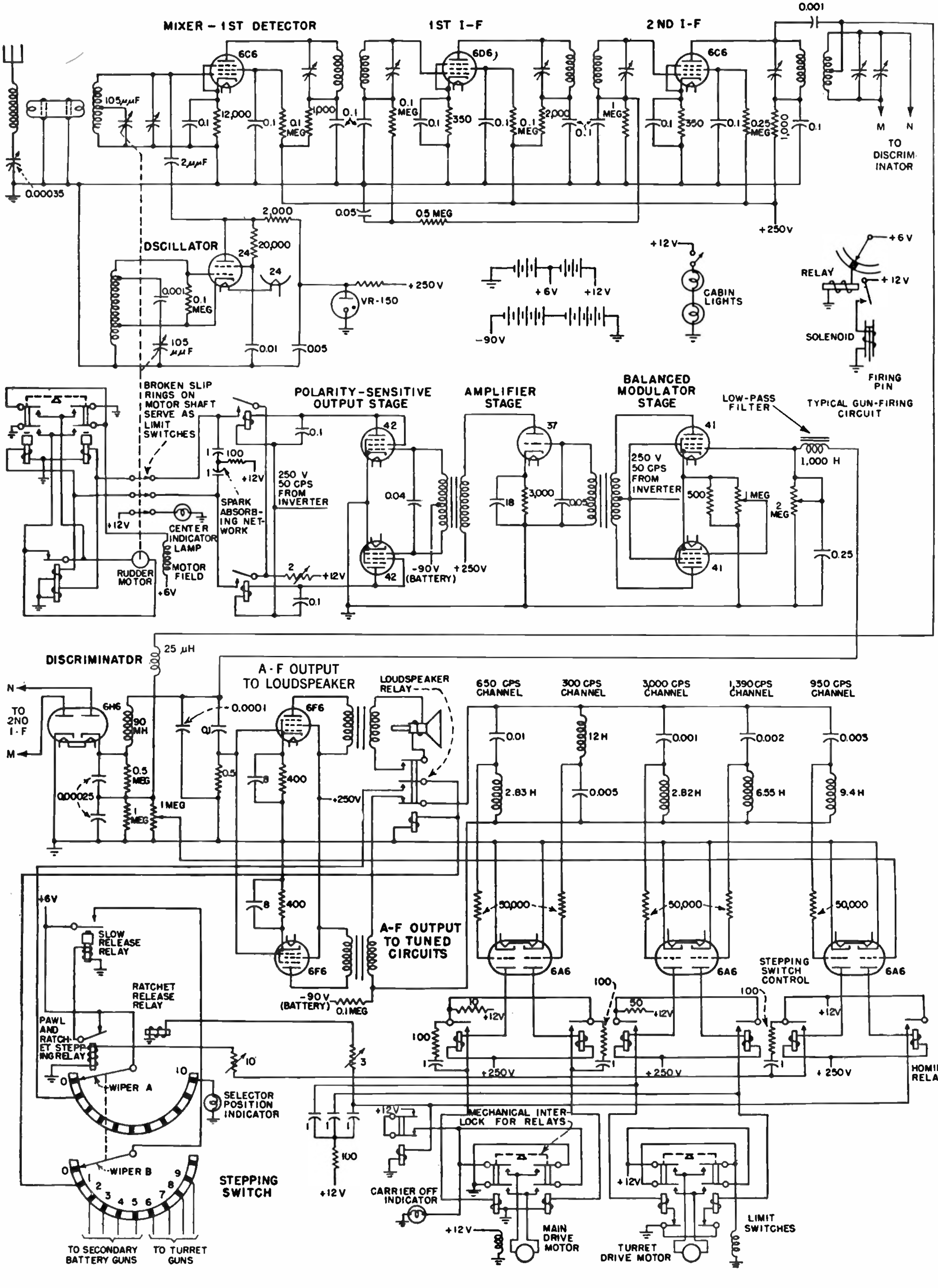
MIXER - 1ST DETECTOR
1ST I-F
2ND I-F
0.001
6C6
6D6
6C6
105 μμF
0.1
12,000
0.1 MEG
1,000
0.1 MEG
350
0.1 MEG
2,000
1 MEG
350
0.25 MEG
1,000
M
N
TO DISCRIMINATOR
2 μμF
0.00035
2,000
0.05
0.5 MEG
+250V
OSCILLATOR
24
20,000
24
0.001
0.1 MEG
+250V
VR-150
105 μμF
0.01
.005
+6V
+12V
-90V
+12V
CABIN LIGHTS
+6V
RELAY
+12V
SOLENOID
FIRING PIN
TYPICAL GUN-FIRING CIRCUIT
BROKEN SLIP RINGS ON MOTOR SHAFT SERVE AS LIMIT SWITCHES
POLARITY-SENSITIVE OUTPUT STAGE
AMPLIFIER STAGE
BALANCED MODULATOR STAGE
LOW-PASS FILTER
0.1
42
37
41
1,000 H
100
+12V
250 V 50 CPS FROM INVERTER
0.04
SPARK ABSORBING NETWORK
18
3,000
.005
250 V 50 CPS FROM INVERTER
500
1 MEG
2 MEG
+12V
CENTER INDICATOR LAMP
MOTOR FIELD
RUDDER MOTOR
+6V
2
+12V
0.1
42
-90V (BATTERY)
+250V
41
0.25
25 μH
DISCRIMINATOR
N
TO 2ND I-F
M
6H6
90 MH
0.5 MEG
.00025
1 MEG
1 MEG
A-F OUTPUT TO LOUDSPEAKER
0.0001
0.1
0.5
6F6
8
400
+250V
LOUDSPEAKER RELAY
650 CPS CHANNEL
300 CPS CHANNEL
3,000 CPS CHANNEL
1,390 CPS CHANNEL
950 CPS CHANNEL
0.01
12 H
0.001
0.002
0.003
2.83 H
0.005
2.82 H
6.55 H
9.4 H
+6V
SLOW RELEASE RELAY
8
400
A-F OUTPUT TO TUNED CIRCUITS
6F6
-90V (BATTERY)
0.1 MEG
50,000
50,000
50,000
6A6
6A6
6A6
STEPPING SWITCH CONTROL
RATCHET RELEASE RELAY
PAWL AND RATCHET STEPPING RELAY
100
10
+12V
50
+12V
100
+12V
100
1
+250V
1
+250V
1
+250V
HOMING RELAY
0
WIPER A
10
10
3
SELECTOR POSITION INDICATOR
+12V
MECHANICAL INTERLOCK FOR RELAYS
100
+12V
0
WIPER B
1 2 3 4 5 6 7 8 9
STEPPING SWITCH
CARRIER OFF INDICATOR
+12V
+12V
MAIN DRIVE MOTOR
TURRET DRIVE MOTOR
LIMIT SWITCHES
TO SECONDARY BATTERY GUNS
TO TURRET GUNS

the second stage and is fed through the push-pull grid transformer into the phase-sensitive output stage. The two tubes of the output stage are biased to cutoff by a negative grid supply. The plate circuit is supplied with alternating current from the same small inverter that supplies the plate potential for the balanced modulator. Normally, then, neither of the output tubes will draw current. When alternating current appears in the grid circuit of the output stage, the tube whose grid is going positive during the positive pulse of the inverter will draw current. The output grid that is going positive during the positive inverter pulse will, of course, depend upon the polarity of the balanced modulator input. Thus a positive input causes one output relay to operate, and a negative input causes the other output relay to operate.

The small capacitances connected across the modulator plate transformer and across the grid transformer of the last stage serve two functions. They bring the normal peak of the transformer nearer to the 50-cycle frequency at which the inverter operates, thereby increasing the effective gain of the amplifier and causing it to discriminate against random noise created by the inverter brushes. More important, the capacitances are trimmed so as to compensate for phase shifts that would otherwise occur in the amplifier, thus making the signals at the grids of the output stage either in phase or 180 degrees out of phase with the potential applied to the plates of the output tubes.

G. C. Fitzgerrell, Radio Control for Model Battleship, *Electronics*, January, 1947, p. 106.

Repeater Circuit of Telemetering System Utilizing Phase Angle as Transmission Means

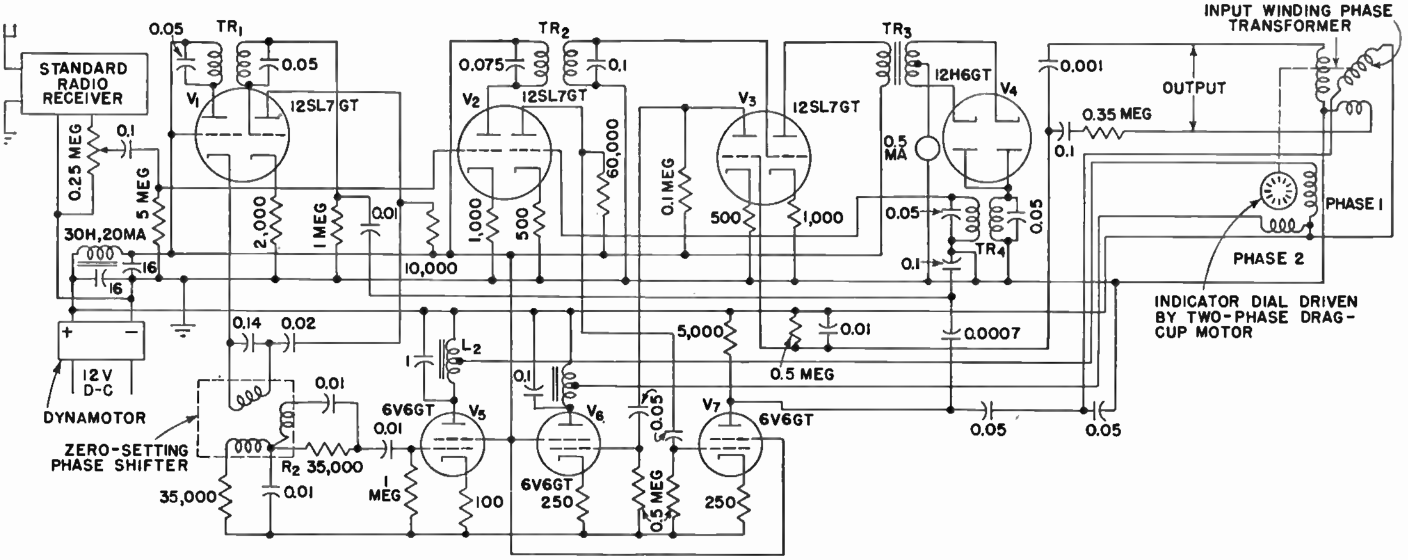

The repeater circuit shown, designed for an electronic telemetering system in which an instrument reading is translated into phase-angle change, converts the output of the radio receiver into currents suitable for driving an indicator which accurately repeats the readings of the instrument being telemetered. The output from the radio receiver energizes two filter systems starting with the first halves of V_1 and V_2 (both 12SL7GT). The output from the first half of V_1 is filtered by TR_1, which passes only the 500-cycle component to the second half of V_1 for energizing the zero-setting phase-shifting device that excites power amplifier V_5 (6V6GT). In turn, V_5 feeds into phase one of the two-phase drag-cup motors driving the phase-meter indicator.

The first half of V_2 is connected to TR_2, which passes only the 250-cycle reference component of the received signal. This 250-cycle component is amplified by the second half of V_3 and is then fed through TR_3 for rectification by V_4, producing a strong second harmonic component that is selected by TR_4, producing a reference signal of the same frequency as the intelligence signal and therefore easily compared with it by a phase-angle meter. This 500-cycle component is amplified by V_2 and V_7 and is fed into a phase transformer driven by the two-phase drag-cup motor. The output of this phase transformer is amplified again by amplifiers V_3 and V_6, and in turn excites phase two of the two-phase meter indicator.

The two-phase motor will develop torque when there is any phase-angle difference between the currents in phase one and phase two of the motor. Phase one is excited by the amplified 500-cycle component of the received signal. Phase two is excited by the comparison signal, doubled in frequency and shifted in phase by the phase transformer in the motor-driven phase-angle meter. The phase-transformer position for zero phase angle between the currents in phase one and phase two of the motor is then a function of the difference in phase between the intelligence and the comparison signal in the received wave, which is in turn a function of the altimeter reading.

The phase transformer operates the indicating pointer directly. Any discrepancy between the position of this phase transformer and the sensitive altimeter shaft, which might be due to electrical phase shifts in the radio transmission equipment and in the transmitting and receiving electronic units, is compensated at the time of installation by adjusting the zero-setting phase shifter. This adjustment has to be made only once for each installation.

A system of this type is also applicable to multichannel instrument transmission on one radio carrier. For this use one comparison signal is employed with a multiplicity of intelligence waves, permitting a compact and accurate system for transmitting the entire flight group of instruments.

For industrial telemetering, the radio link may be eliminated, providing accurate and flexible multichannel, or single-channel, telemetering adaptable to carrier current or wire service.

David W. Moore, Jr., Plane-to-ground *Radio Telemetering*, *Electronics*, November, 1945, p. 125.

Narrow-deviation F-M Transmitter for Radio Control of Model Battleship

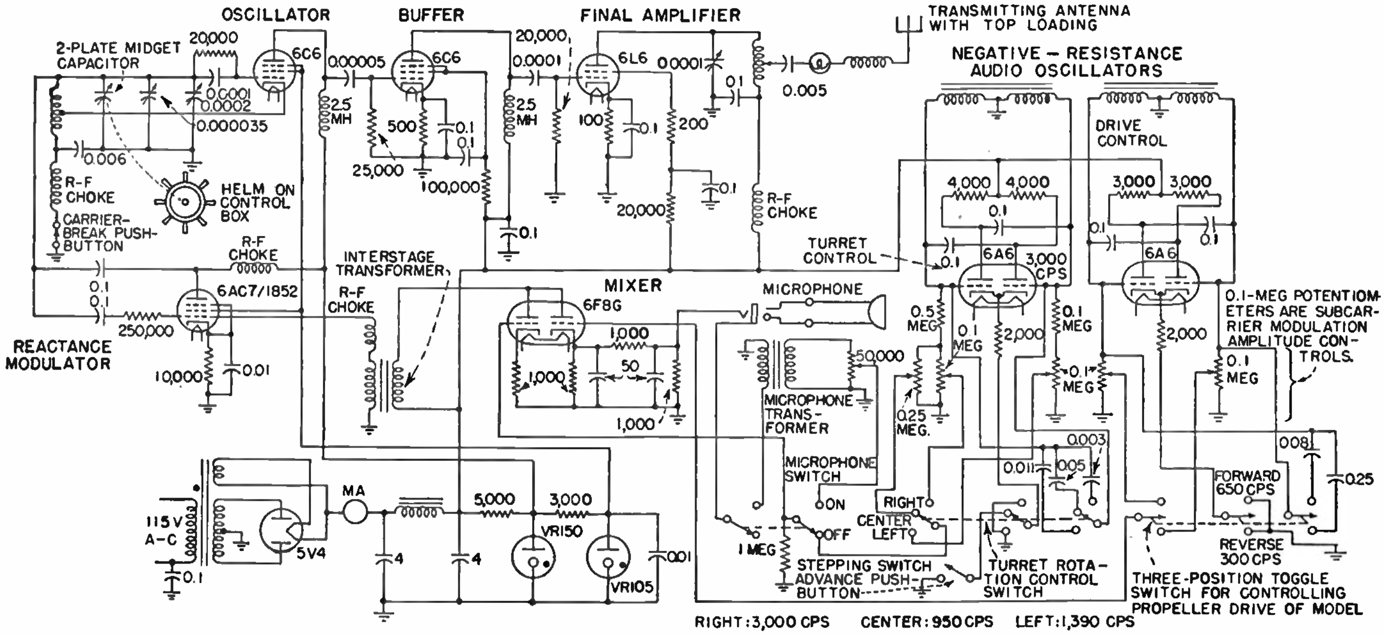

CONTINUOUS control of the drive motor, rudder, and guns on a battery-powered 10-foot model of the battleship U.S.S. "California" is achieved by carrier interruption and use of five subcarrier frequencies in this narrow-deviation 1,800-kc f-m transmitter circuit. Three types of signals are used:

1. Random variations of the carrier frequency over a total range of approximately 10 kc by means of a trimmer capacitor in the oscillator circuit. The capacitor is geared to a wheel on the control box, and the frequency deviation produced by varying the capacitance is used to control the operation of the model's rudder.
2. Audio-frequency modulation of the carrier by a reactance-tube modulator acting on the oscillator. The reactance-tube modulator is driven through a mixer tube by a pair of a-f oscillators. The oscillators may be operated simultaneously or singly, as desired. The constants of the first oscillator can be switched to permit it to generate a frequency of either 300 or 650 cycles. These subcarrier frequencies are used to control the main drive motors. The constants of the second oscillator can be switched to make the oscillator frequency 1,390, 3,000, or 950 cycles. The 1,390 and 3,000-cycle subcarriers control the direction of turret rotation, while the 950-cycle carrier is used to control the advance of an 11-position stepping switch used to fire the guns, operate an indicator light, and connect a loudspeaker into the audio system of the receiver for simulation of shipboard sounds.
3. Momentary interruption of the carrier frequency by breaking the plate supply of the oscillator. This signal is used to home the stepping switch just mentioned. Breaking of the carrier also opens the power supply to the main drive motor for the duration of the break, reducing the probability of runaway should the transmitter fail or the model sail out of operational range.

A microphone may be switched into the modulator system, thus permitting the operator to transmit speech and other sounds to the model. When a loudspeaker is connected into the audio system of the receiver, the transmitted speech may be heard from the model, or the subcarriers may be heard and used in simulation of shipboard sounds.

If the loudspeaker is not connected in the receiver output, the operator may, as a stunt, operate any one of the five subcarrier-controlled channels by whistling the appropriate frequency into the microphone.

The reactance-tube modulator elements and the electron-coupled oscillator in the transmitter circuit are fed from a voltage-stabilized source to minimize drift. The buffer stage and plate circuit of the electron-coupled oscillator are left untuned to simplify tuning procedures. The various a-f subcarriers are supplied by switching *LC* components in the grid circuits of simple negative resistance oscillators. Subcarrier modulation amplitudes are controlled by potentiometers in the oscillator outputs.

An 8-foot aluminum rod may be coupled to the 6L6 final amplifier when an operating range of more than a few feet is desired. A loading whip and inductance are coupled to the top of the rod to increase its radiating efficiency.

G. C. Fitzgerrell, Radio Control for Model Battleship, *Electronics*, January, 1947, p. 106.

Transmitter Circuit of Telemetering System Utilizing as Transmission Means Phase-angle Telemetering

THIS telemetering system permits reading a standard aircraft instrument with very slight modification to the instrument itself, transmitting this reading to any desired remote position or positions, and reproducing faithfully the initial indication on a dial equivalent to that of the aircraft instrument. Electrical phase angle serves as the transmission means.

An instrument indication pickup was designed which coupled magnetically to the sweep pointer of the sensitive altimeter, and which shifted the phase of its input signal degree for degree with the motion of the sweep pointer.

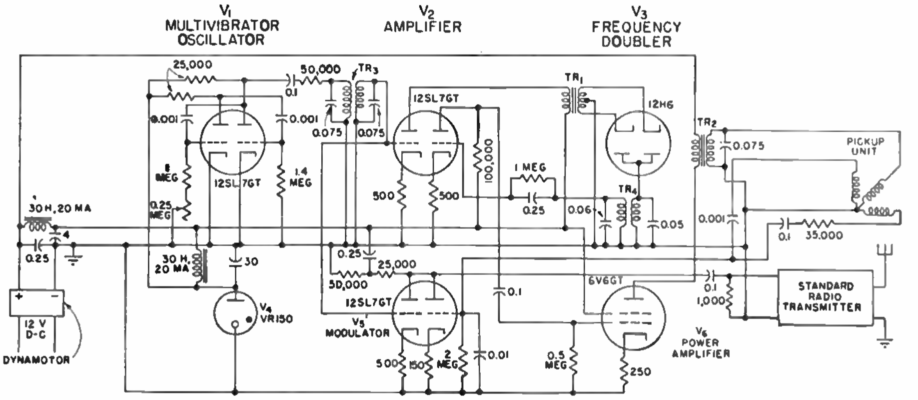

The pickup was designed to mount directly on the sensitive altimeter. No alterations were necessary to the altimeter other than the mounting of a small permanent magnet on the hub of the sweep pointer. This magnet enabled the use of magnetic coupling to the position pickup and the maintaining of the pressure seal of the instrument.

The position-receiving instrument was an electrical phase-angle meter with its output connected to a pointer system similar to that in the original altimeter.

To transmit intelligence by electrical phase angle, it is necessary to transmit a reference signal to be used as a time or phase standard, as well as the intelligence signal. The comparison signal and the intelligence signal are transmitted as two separate audio frequencies on one radio-frequency carrier. V_1 is a double triode (12SL7GT) acting as a 250-cps multivibrator oscillator. The 250-cycle wave passes through tuned transformer TR_3 to one half of V_2 (12SL7GT) acting as an amplifier for the frequency-doubling circuit including V_3 (12H6), and to one half of V_5 that acts as a modulator for the radio transmission system. Tube V_3 rectifies the 250-cycle signal, producing a strong second harmonic component which is selected by tuned transformer TR_4 which is tuned to 500 cycles. This second harmonic signal is then fed into the second half of V_2, which amplifies it and feeds it into power amplifier V_6. This power amplifier energizes the phase-shifting pickup whose output is fed to modulator V_5 and combined with the original 250-cycle signal that is used as the reference signal. The phase angle between the input of the phase-shifting pickup and its output is a function of the position of the altimeter sweep hand.

The output of the modulator tube is fed into a standard radio transmission system capable of being modulated by 250 and 500 cycles and having a small fixed phase shift between the two signals. For testing, a frequency-modulation radio transmitting and receiving system was used.

David W. Moore, Jr., Plane-to-ground Radio Telemetering, *Electronics*, November, 1945, p. 125.

Electronic Ammeter for Reading Transmitting Antenna Current at Remote Point

With this simple telemetering circuit, the transmitting antenna current can be read conveniently from within the station even though the antenna is several hundred feet away. The circuit is entirely electronic, contains no thermocouples, and can withstand direct lightning strokes on the tower without putting the station off the air.

The circuit uses a current transformer with a primary consisting of a heavy copper rod. An electrostatically shielded secondary feeds a 1V diode rectifier tube that actuates a d-c microammeter. The microammeter is calibrated in r-f amperes and provides an approximately linear calibration because the diode load resistance is made large in comparison with the tube impedance. An instrument of this type is not absolute and must be adjusted to agree with the regular thermocouple ammeter. Federal Communications Commission regulations provide that this adjustment must be made once a week. When not in use for calibrating purposes, the thermocouple may be switched out of the circuit.

C. R. Cox, Remote Indicating Antenna Ammeter, *Electronics*, January, 1946, p. 210.

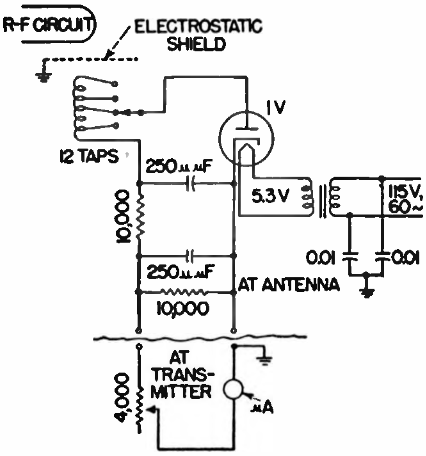

Four-channel Superheterodyne Receiver Circuit for Control of Razon Guided Bombs

This crystal-controlled tone-modulated remote-control receiver circuit is capable of operating at any one of 47 predetermined frequencies with four control channels, and was used primarily during the war for azimuth and elevation control of Razon bombs.

In operation, the tone-modulated r-f signal received by the antenna is amplified by the r-f amplifier circuit and then fed to the control grid of the mixer stage. The oscillator section employs a modified Pierce oscillator with an untuned grid circuit and with the plate circuit tuned to the third harmonic of the crystal frequency, followed by a tripler amplifier stage that applies the ninth harmonic of the crystal frequency to the mixer tube inductively by cathode injection. The mixer filament is connected in such a manner that it is at the same r-f potential as the cathode, eliminating the loading effect of the filament-cathode capacitance. The mixer plate circuit is tuned to the

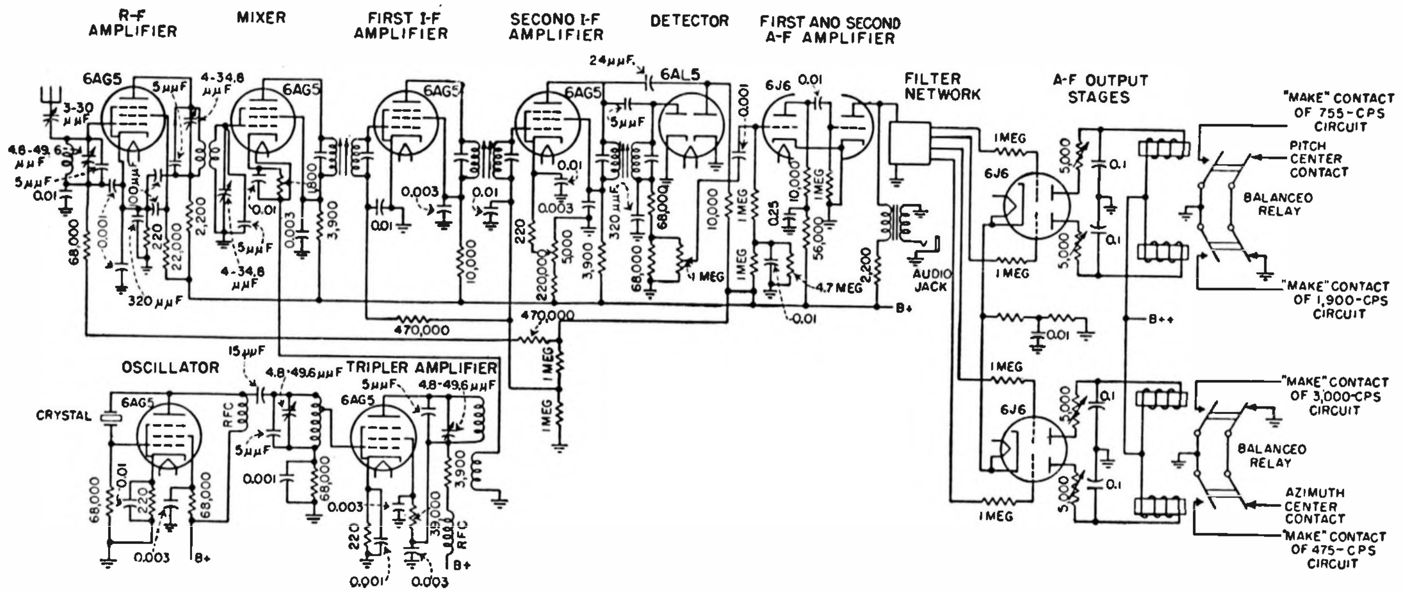

5-mc i-f value. The gain of the first i-f stage is controlled by avc, while that of the second i-f stage is controlled by three factors—avc, a fixed bias tapped from a bleeder resistance, and the bias voltage developed across the cathode resistor.

One section of the duodiode is used for audio detection, and the other provides avc voltage for the r-f stage, the i-f stages, and the first audio stage. The output of the second i-f amplifier stage is also coupled through a capacitor to the plate of the avc section of the duodiode, making possible the desired avc voltage for the audio tube. Two stages of audio amplification follow the detector, with the output feeding a selective filter network. The four secondaries of this tuned audio transformer network respond to the audio frequencies of 475, 755, 1,900 and 3,000 cycles per second. Each filter output voltage is applied to the grid of a triode which is biased beyond cutoff and which has in its plate circuit a relay which closes an electric circuit to a mechanical actuator. A series resistor in the grid circuit prevents strong signals from causing excessive grid current. High grid current would load the filters, reducing the circuit Q and thus reducing filter selectivity on strong signals.

Rheostats in the plate circuits of the triodes permit adjusting channel sensitivity. Balanced relays are used, one for each twin-triode. As long as no signal is applied, the relays will remain in a balanced condition. When a signal is received on a grid, the relay in that circuit will be unbalanced in one direction. If a signal appears on the other control grid of the same tube, the relay will be unbalanced in the opposite direction. In the balanced condition, relay contacts are set so that the mechanism controlled by the relay will return to a centered position. If the relay is unbalanced in one direction, the mechanism will be maneuvered off center position in a predetermined direction, and vice versa.

Sam L. Ackerman and George Rappaport, Radio Control Systems for Guided Missiles, *Electronics*, December, 1946, p. 86.

Remote Tuning of Receivers with Reactance-tube Circuits

THIS circuit portrays a simple and continuous electronic tuning and control arrangement whereby two different radio receivers may be turned on and tuned independently from a remote location by means of reactance-tube circuits actuated by direct voltages applied over the two pairs of telephone lines used for bringing the receiver outputs to the remote location.

The two reactance-tube circuits shown have identical values. A change in d-c voltage on the control grid, through R_1, produces a reactance change between points A and B. Capacitor C_1 is a blocking capacitor, C_2 is a phase-splitting capacitor, and C_3, C_4, and C_5 are bypass capacitors. Resistor R_2 merely drops screen voltage to a desirable value.

Points A and B go to the oscillator tank circuit to be controlled. Inasmuch as the impedance presented at AB may have a resistive term, there will be some loading of the oscillator circuit by the control tube. The magnitude of the resistive term diminishes as the phase difference between the grid voltage and the impressed voltage at AB approaches 90 degrees.

When tuning a voice receiver by means of the reactance-tube circuit, it is necessary to control the high-frequency oscillator, but for the reception of c-w telegraph signals the control may be applied to the beat-frequency oscillator and the high-frequency oscillator may be crystal-controlled.

The range of frequency variation at 5 mc when the high-frequency oscillator is controlled may be as high as 30 kc with a 12-volt bias variation. When the control is applied to the beat-frequency oscillator at 465 kc, the available variation in beat note is approximately 10 kc each side of zero beat for a total bias variation of 12 volts. The amount of variation, or control, is largely determined by the amount that the grid bias on the reactance tube is varied and the value of the coupling C_1; the larger this capacitor, the greater the control.

Closing the dpst power switch at the office turns on the office amplifier and also turns on the remote receivers. Closing the tuning switch at the office applies bias to the two remotely located reactance tubes. Variation of the tuning-control

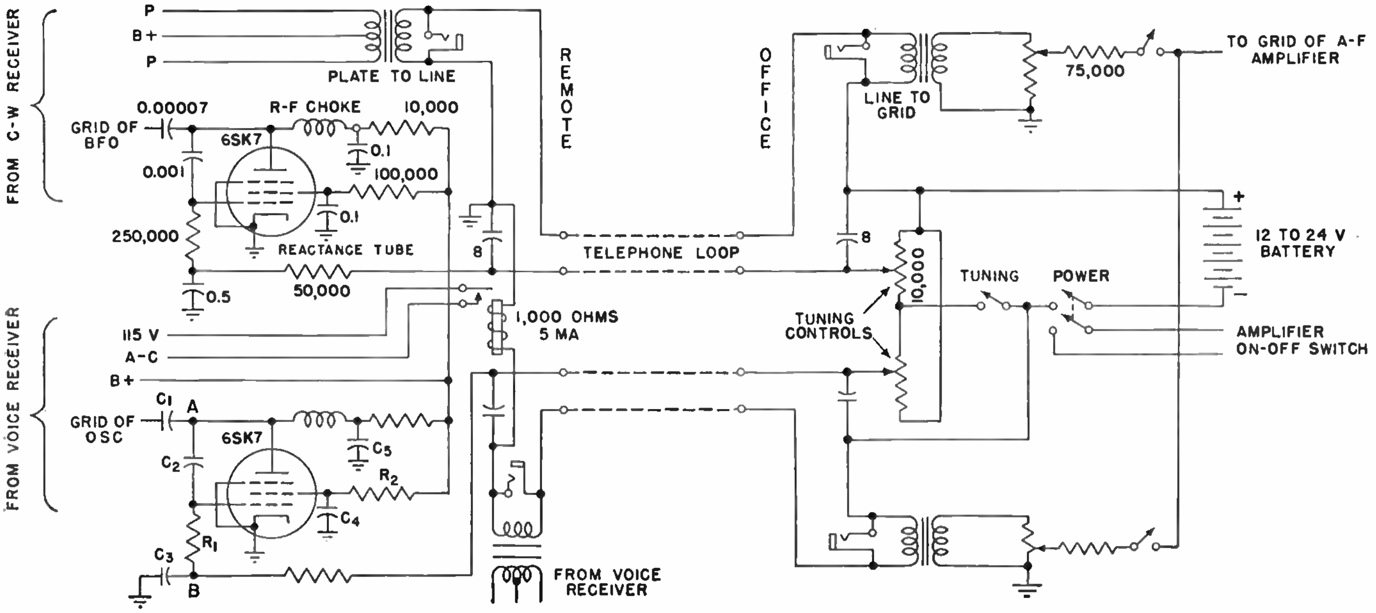

potentiometers changes the output reactance of the two reactance tubes and accomplishes the desired tuning. Audio output of the two receivers is fed back to the office over the associated telephone lines and applied to the office amplifier input through potentiometers and spst switches providing individual control.

H. B. Bard, Jr., Remote Tuning with Reactance Tubes, *Electronics*, August, 1945, p. 100.

TEMPERATURE-CONTROL CIRCUITS

Simple Temperature-control Circuit Using Thyratron with External Control Band

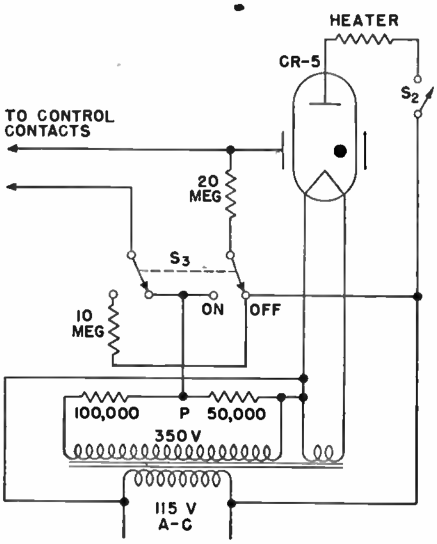

W. E. Gilson, Applications of Electronics to Physiology, *Electronics*, January, 1943, p. 86.

THIS simple temperature-control circuit provides sufficient accuracy of response for a variety of practical applications by using a thyratron to control electric-heater current directly. The control contacts may be the mercury column of a thermometer and an electrode embedded therein, since the CR5 thyratron (made by Continental Electric Co.) uses an external control band and thus virtually eliminates grid current that would cause oxidation and sparking at mercury contacts. The tube may be used without special ventilation at 1 ampere plate current, and will carry 5 amperes with a small fan blowing on it, allowing control of power up to 550 watts. The CR10, a tube twice as large, may be used in the same circuit.

With switch S_3 in the position shown, the control-band voltage is normally in phase with the plate voltage, and the tube fires early in each positive half cycle. When the control contacts are brought together, by a rising column of mercury or other means, the control band is brought to the potential of point P, which is 180 degrees out of phase with the plate, so that the tube can no longer conduct.

Provision has been made for the occasional application where it is necessary to turn the power on rather than off when the controlling contacts are brought together. With S_3 to the left the control-band voltage is normally 180 degrees out of phase with the plate voltage, so that the tube does not break down. When the contacts are closed, the control band is connected to a point in phase with the plate, causing the tube to conduct.

Oscillator Circuit Detuned by Mercury in Thermometer for Oven Control

THE temperature of laboratory ovens may be automatically maintained within ±0.5°C by means of this electronic control circuit, the precise accuracy being dependent upon the character of the thermometer used to indicate oven temperature.

The control may also be used as a safety device to cut off heater current in the event that standard controls supplied with stock ovens fail. In this case it is adjusted to operate at a temperature slightly higher than the critical value and takes over control of heater current at that point.

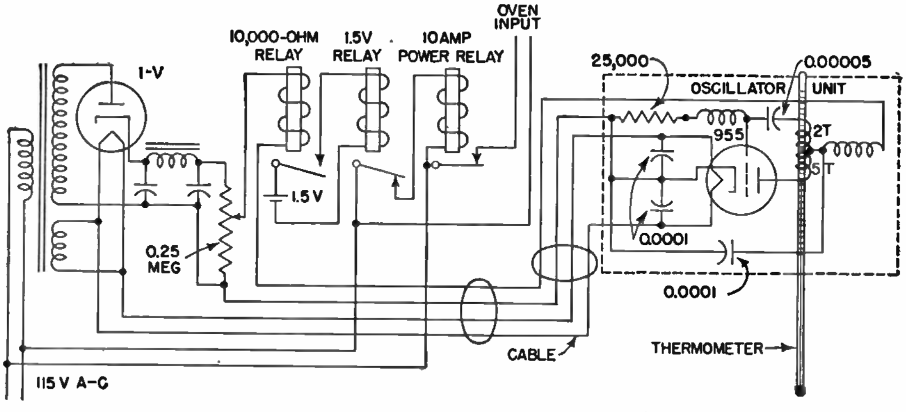

The oscillator unit, which operates at a noncritical high frequency, is designed around a type 955 acorn triode. The exposed end of the oven thermometer passes through the tank coil. Rise and fall of the column of mercury in the thermometer tunes and detunes the oscillator, altering its plate current.

The oscillator unit is oriented so that the mercury column is level with the plate end of the tank coil at the desired oven operating temperature. Oscillator plate voltage is then adjusted by means of the 250,000-ohm potentiometer so that the 10,000-ohm plate-circuit relay just barely closes. Voltage is reduced, and the relay opens.

Increase in oven temperature above the desired value causes the mercury column in the thermometer to rise. Inasmuch as the mercury column rises inside the oscillator tank coil, the oscillator is detuned, its plate current rises, and the plate-circuit relay closes. Closing of the plate-circuit relay energizes the 1½-volt battery-operated relay, opening its contacts. The 10-ampere power relay is deenergized and oven current is cut off. Oven current remains cut off until the mercury column falls to the critical value, at which time inverse relay operation takes place and heater current is restored.

Satisfactory action of the electronic control is largely dependent upon the adjustment of the 10,000-ohm relay. The limiting factors with respect to speed as well as accuracy are, however, the characteristics of the thermometer.

W. B. Ritchie Agnew, Laboratory Oven Temperature Control, *Electronics*, October, 1944, p. 108.

Thyratron-controlled Thermostat for Precision Control of Liquid Temperature

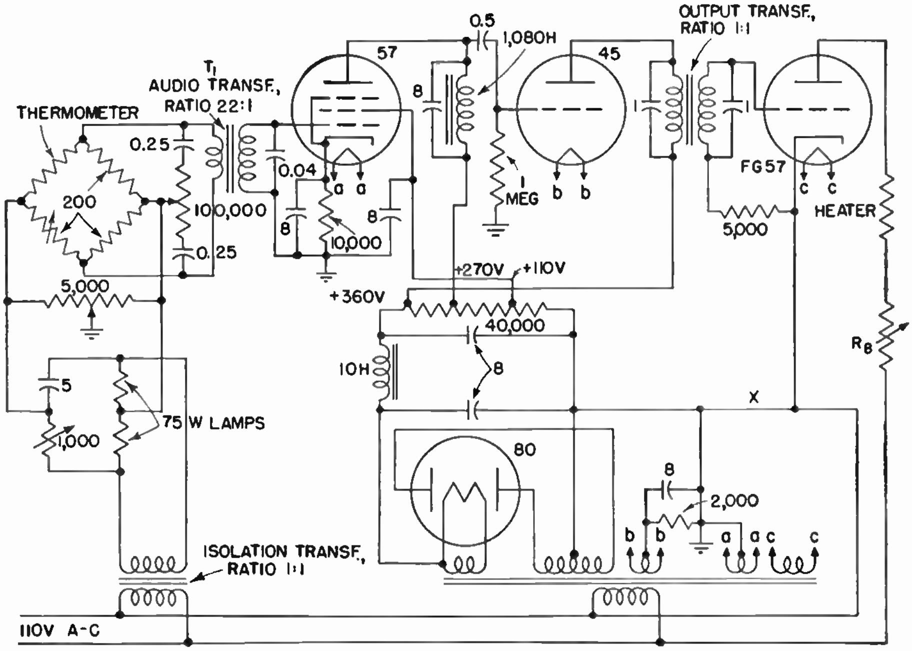

Temperature is maintained constant to within a few thousandths of a degree for periods of several hours by this thyratron-controlled thermostat, which operates from the 115-volt a-c power line rather than from batteries.

A resistance-type thermometer in one arm of a modified Wheatstone bridge forms the essential controlling element. Two other arms of the bridge are fixed resistors, while the fourth arm is variable and may be adjusted manually. The source of voltage for the bridge is taken from the 115-volt line and the output is applied to an audio transformer of the double-button microphone-to-grid type having a ratio of 22 to 1. This voltage is then applied to the grid of a type 57 tube, where it is amplified and then applied to the grid of the type 45 tube for further amplification. The output of the 45 tube operates a type FG57 thyratron whose plate circuit contains the heating elements of the thermostat.

It is advisable to shield the bridge and the amplifier thoroughly because sufficient amplification is used so that pickup voltages may otherwise be troublesome. Shielded leads connecting transformer T_1 to the amplifier are recommended. It is further suggested that the transformer T_1 be situated so as to have no inductive coupling with other equipment in the thermostat. A suitable position for this transformer may be determined by short-circuiting the primary winding and moving the transformer about until no voltage is observed at the grid of the thyratron.

With the resistance thermometer in the bath and maintained at the desired temperature, the 5,000-ohm voltage divider is adjusted so the circuit may be balanced to provide voltage at the grid of the thyratron when the resistance of the variable bridge arm is suitably adjusted. This adjustment serves to neutralize various voltages arising from leakage or coupling effect.

The variation with signal amplitude of the phase shift in the amplifier is sufficient so that it is unnecessary to supply more than a very small component of voltage other than that arising from the off-balance of the bridge in order to secure continuous control. This component is obtained by a slight change in the setting of the voltage divider, the best setting being that which gives a maximum rate of gain with respect to bridge off-balance of the plate current passed by the thyratron. Resistor R_8 is adjusted so that the maximum current the thyratron will pass is about twice that needed to maintain the constant temperature desired.

If the resistance of the thermometer increases beyond the point of bridge balance by more than about 0.2 per cent, the thyratron abruptly starts to pass maximum current. This results in a complete loss of temperature control, so that the temperature of the bath must be within a few tenths of a degree of the desired point before the control is entrusted to the thyratron.

In an operating period of 50 hours during which the room temperature changed from about 22°C to about 27.5°C, the temperature of the thermostat-controlled bath did not vary more than about 0.003°C from its mean or normal value.

Julian M. Sturtevant, A Thyratron-controlled Thermostat, *Rev. Sci. Instruments*, August, 1937, abstracted in *Electronics*, November, 1938, p. 58.

Phototube Relay Circuit for Maintaining Two Separate Chambers at Constant Temperature

This temperature-control circuit was designed to hold the temperature of an inner box and the temperature of a surrounding guard box at identical values, as required for heat-transfer tests and other applications.

The detecting element is a Wheatstone bridge having four equal arms of approximately 100 ohms each, made up of enamel-covered iron thermocouple wire. Two of the opposite elements, or arms, are wound on a light wooden frame and hung in the inner box, while the other two arms are similarly placed in the guard, or outer, box. A balancing resistor is also placed in the circuit to correct for slight inequalities the resistance of the four arms of the bridge. This type of detecting element has a particular advantage in its low heat capacity, making it ideal for rapid and sensitive response to slight temperature changes. In addition, since the four arms may be wound with comparatively wide spacings, the elements fill a reasonably large volume of the boxes, ensuring a good average temperature for each of the boxes.

The bridge is supplied from a single dry cell, while the unbalance across the bridge is detected by a Leeds and Northrup type 2420 lamp and scale galvanometer. For control purposes this galvanometer has been fitted with an RCA 924 phototube which has been mounted inside the galvanometer box in such a manner that it intercepts the light beam when the galvanometer deflects in one direction.

The operating control circuit consists simply of an electronic phototube relay that, under control of the galvanometer light beam, operates or releases a sensitive relay. This relay in turn controls another heavier duty relay used to supply or disconnect 115-volt power to the 80-watt heater of the guard box.

The operating control circuit includes a voltage-doubler rectifier and power supply for the phototube and vacuum tubes, a 6-volt transformer power supply for the galvanometer lamp, a battery and switch for the bridge circuit (not shown in the figure) and a rheostat for varying the galvanometer sensitivity (also not shown).

In operation the control system is so connected to the hotbox bridge that if the guard box is warmer than the inner box, the power to the 80-watt heater in the guard box is cut off. If the reverse, heat is added to the guard box.

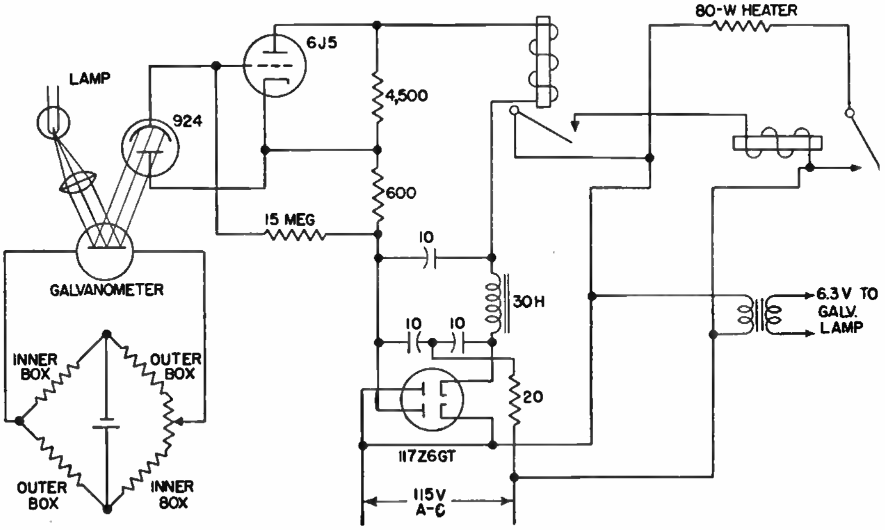

Robert V. Brown, Electronics Applied to Heat Transfer Tests, *Electronics*, July, 1943, p. 113.

Precision Electronic Control Circuit for Constant-temperature Bath

With the circuit arrangement shown, the temperature of a liquid bath can be maintained constant within a few thousandths of a degree Fahrenheit for unlimited periods of time at any temperature from zero to 240°F.

A resistance thermometer forms one arm of a simple resistance bridge that is fed by a low-voltage source of alternating current. The output of the bridge is coupled to the first amplifier tube by an impedance-matching transformer. The first and second amplifier tubes are resistance-capacitance coupled, with the second stage feeding a push-pull output transformer that drives a pair of type 2A4G miniature thyratrons whose plate current serves to saturate the core of a saturable reactor. The secondary windings of this reactor are connected into the heater circuit for the constant-temperature bath.

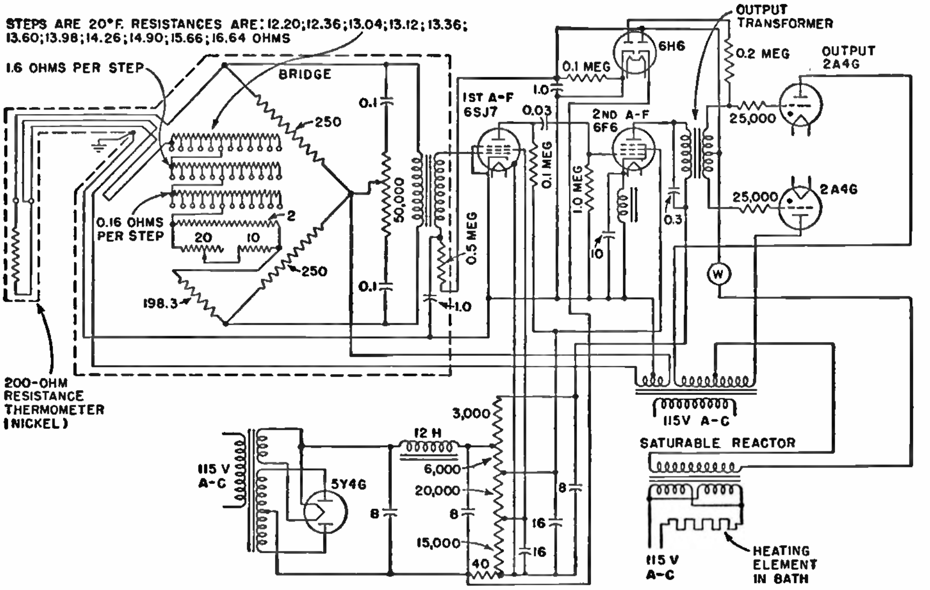

The circuit normally operates by means of a phase shift of the thyratron grid voltage, but a secondary shift occurs if the bridge continues to move off balance as the bath temperature increases and the amplifier output goes above about 50 volts. This secondary phase shift is caused by the large current amplitudes in the off-balance conditions, overloading the tubes and transformers, and is prevented here by using automatic gain control. Automatic bias voltage is obtained from half of the output transformer and applied to the first amplifier stage.

With this circuit, although a decrease of bath temperature of 0.02°F doubles the heat input, an increase of bath temperature of any value from 0.1°F to 40°F reduces the heater current to a minimum. Thus there is no danger of losing control.

The thyratron plate meter is calibrated in heater watts input for a given heater and line voltage. When the temperature has been set at the desired value and the variable heater input established, a deviation of this meter in an upward direction indicates that the bath temperature is low by a few thousandths of a degree. The deviation can be roughly estimated from the reading, considering that a deviation of 0.02°F doubles the heat input. Temperature is held well within ±0.01°F at 210°F.

C. J. Penther and D. J. Pompeo, Electron Tubes in Petroleum Research, *Electronics*, April, 1941, p. 20.

Bridge-type Vacuum-tube Voltmeter for Use with Radiation Pyrometer

With this highly stable bridge-type battery-operated vacuum-tube voltmeter circuit connected to a radiation pyrometer for flame radiation measurements, the operating efficiency of an open-hearth steel furnace can be quickly checked. The required stability is achieved by using one vacuum tube as a fixed resistance in one leg of the bridge and employing R_c to provide degeneration. The type 1S4 button-base tube operated as a triode has a sufficiently low d-c plate resistance to compare favorably with the smaller power triodes for bridge use.

Since a tube d-c plate resistance of a little over 10,000 ohms was expected at the operating point, a load of 2,250 ohms was assumed in this instance in order to make the bridge resistance ratios equal to a value of approximately 0.2. By trial, 1,000 ohms was found to be the largest value that could be used to approximate the desired operating point. Using these values gave a sensitivity of 23.8 microamperes for an input signal of 50 millivolts, which is appreciably better than the minimum requirements.

The bias cell and voltage divider were provided so that at any time a known potential could be switched into the input to check calibration of the instrument. A wire-wound zero-adjust potentiometer was used at first but, later replaced with a carbon control in order to get a stable adjustment for mobile use in the mill.

To take a reading the instrument is placed at a furnace door so that lugs on the heat screen engage the wicket hole. This centers the radiation pyrometer in the aperture and ensures an unobstructed view of the flame. Because of the rapid response of radiation pyrometers, a reading is obtained in a few seconds.

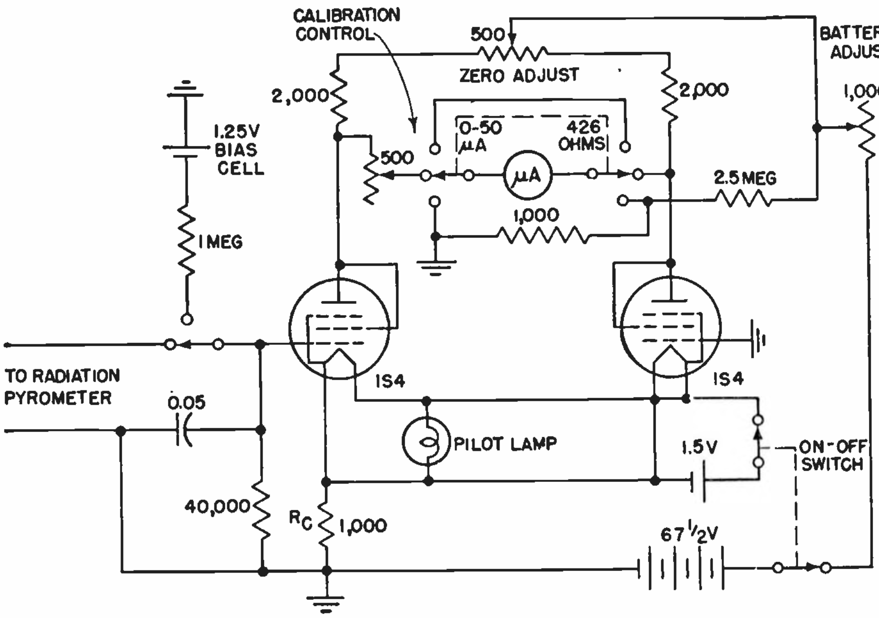

The readings are left in arbitrary scale values, since it is not intended to find furnace temperature, but to obtain comparative data on the radiating power of the flames. The readings can be converted if desired into millivolts pyrometer output with a simple chart.

Edward M. Yard, Flame Radiation Measuring Instrument, *Electronics*, November, 1946, p. 102.

Resistance Bridge Circuit for Temperature and Humidity Measurement and Control

THIS electronically actuated temperature and humidity printing recorder circuit can also be used for control purposes, measurement being the first prerequisite for control. Temperature and humidity-responsive elements from up to eight different stations can be switched in turn into the bridge circuit by conventional sequencing equipment, and many other uses can be found for this ingenious basic circuit.

Temperature indications are obtained by means of a special ceramic resistor that has a negative temperature-resistance characteristic. The resistance varies in the order of 4 per cent per degree centigrade. A suitable pair of such resistors located in the measuring station permits temperature measurements to be made by the same method as that used in making the humidity measurements.

The electronic unit utilizes nine vacuum tubes, including rectifiers and voltage regulators. The plate supply is regulated by a VR150 and a VR105, the latter being used to decouple the effects of the load produced by the clamping relay in the measuring station.

The bridge circuit consisting of potentiometers R_7 (temperature) or R_8 (humidity) as two legs and resistors R_4 and R_5 (temperature) or R_1, R_2, and R_3 (humidity) as the other two legs. Resistor R_5 is the temperature-responsive ceramic resistor, and R_2 is the humidity-controlled resistor (connected as a potentiometer), both of which furnish appropriate voltages in the bridge circuit as functions of temperature and humidity, whichever is under measurement.

The bridge null detector circuit includes R_6 and V_1 (a 6H6 diode) with a 0.5-volt 60-cycle injected voltage in the cathode circuit.

When potentiometer arm D_4 rotates from point D_1 (the high-voltage end) to point D_2 (the low-voltage end), balance is obtained at some point in the arc, depending on the voltage that the measuring station happens to be transmitting. As the arm passes through voltage balance, the negative half cycles of the injected voltage pass through V_1, producing a voltage drop across R_6. The contact potential and initial velocity of emission of the V_1, about 0.75 volt, is corrected for in the initial calibration. The voltage across the bridge is approximately 48 volts direct current.

At balance, the signal across R_6 is amplified by V_2. This amplified signal at the plate of the tube V_2 is 180 degrees out of phase with the input signal, and therefore appears as positive half-cycle pulses at the grid of V_4. This tube and V_5 are type 2050 gas discharge tubes connected in a modified Eccles-Jordan trigger circuit with the grids biased to cutoff so that only one tube is conducting at any time. Prior to passage of the bridge through voltage balance, tube V_5 is in the conducting state, so that the amplified signal from R_6 will cause tube V_4 to conduct. When V_4 becomes conducting, the drop across R_9 triggers V_6, which is a relaxation oscillator biased to cutoff. As V_6 pulses, it closes relay K_1, thereby energizing printing-bar relay K_2 or K_3, and thus the figure on the printing wheel corresponding with the position of the potentiometer arm D_4 is printed on the record paper.

After passing the balance point, the grid of V_4 continues to receive signal voltage. Since this tube remains conducting after the very first signals reach its grid, further signals have no effect unless they drive the grid too far negative, which might extinguish the tube. To prevent extinction, the diode V_{3A} is connected across the grid to limit the negative signal peaks.

When potentiometer arm D_4 reaches position D_2, the end of the potentiometer winding, all switching, such as selecting the next measuring station and changing from humidity to temperature circuits, is performed in the recorder. Since V_4 is still conducting, transients that might occur during switching are without effect, thus eliminating any possibility of spurious printing.

After all switching has been completed, potentiometer arm D_4 contacts point D_3, which is at +150 volts, and current flows through V_{3B}, whose cathode is biased to +100 volts. Thus 50 volts appears across V_{3B} and its associated resistor R_9.

This voltage change across the resistor appears at the grid of V_5 and makes it conductive, and therefore tube V_4 becomes nonconducting, resetting the trigger circuit for the next passage through balance.

Amplifier V_2 is used to produce a steep change in signal at balance so as to provide printing at the earliest possible time after the balance point is reached. A large rate of change of signal at balance is desirable, since it limits the errors that would otherwise occur because of the lifetime changes in striking potential of the gas discharge tube V_4 and changes in gain of the amplifier. These design principles produce an electronic system the operation of which is substantially independent of tube characteristics.

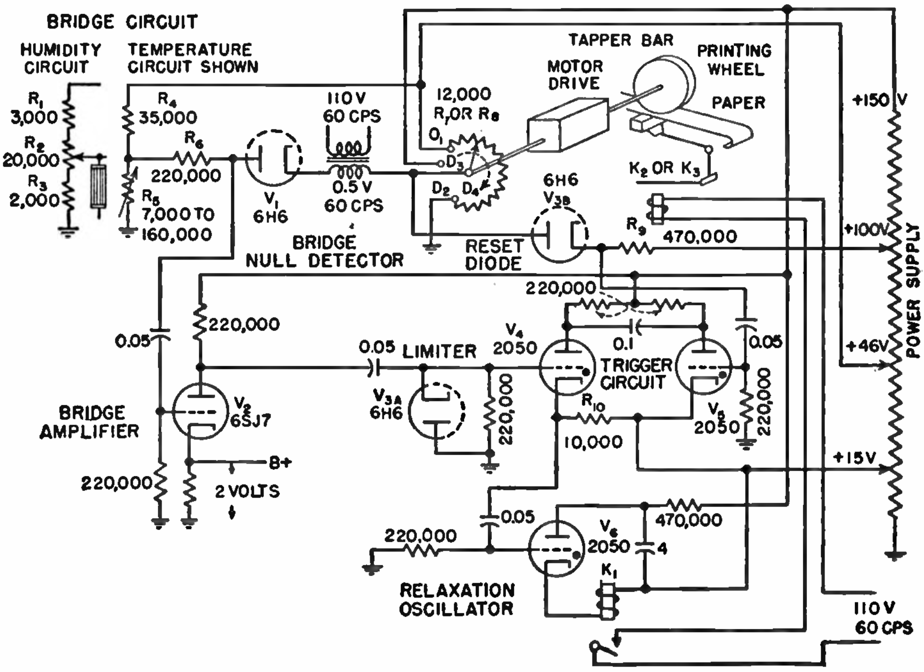

V. D. Hauck, R. E. Sturm, and R. B. Colt, Recorder-controller for Temperature and Humidity, *Electronics*, September, 1946, p. 96.

Phototube Temperature Regulator Using Resistance Thermometer and Wheatstone Bridge

Any change in the voltage output of the resistance-thermometer Wheatstone bridge system of this thermostatic control due to deviations of temperature from a desired value results here in movement of a galvanometer mirror that reflects light onto one of two phototubes. Thyratron amplifiers and relays then turn the electric heater element on or off, depending on which of the two phototubes was activated. Overshooting a phototube does not cause loss of control; hence no mechanical stops are necessary on the galvanometer.

To start heater H, relay S_3 is closed manually so that it locks through its own coil. As the temperature rises and resistance thermometer R_1 increases in resistance, the bridge approaches balance. The galvanometer swings the light beam in a clockwise direction. While phototube VT_1 is activated, relay S_1 closes, which act would normally close S_3. As the light beam swings from VT_1 onto VT_2, relay S_2 is activated, breaking the circuit through the coil of S_3; when S_3 is open, the heater is turned off. The heat is off until the light beam returns to VT_1. Coasting past a phototube or the presence of vibrations, causing multiple impulses to be sent to the phototubes, does not result in loss of control.

Resistances R_2, R_3, and R_4 should be of nichrome or other low-temperature-coefficient material to avoid the necessity of thermostating them at room temperature.

The sensitivity of the Wheatstone-bridge system described is greater than that of a thermocouple. For an iron-constantan couple the increment of voltage is only about 55 microvolts per degree at 400°C when no load is drawn.

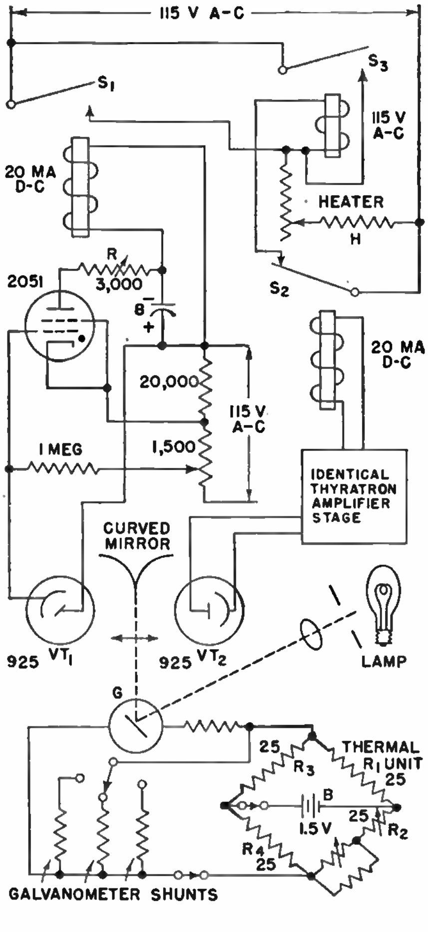

With applied emf of 1.5 volts, Wheatstone resistance of 25 ohms, and a temperature change of 1 degree at 400°C, a galvanometer with coil resistance of 100 ohms would have a current flow of about 8 microamperes or a voltage drop of about 800 microvolts (compared with 55 microvolts for an iron-constantan couple).

Galvanometers in the $25 price range have sensitivities of the order of 0.001 to 0.01 microamperes, or about 1.5 microvolts per millimeter at 1 meter. One degree of temperature change would give deflections of the order of 500 to 1000 mm. If this were the limiting factor, temperature regulation of the order of ±0.01 degree would be possible with such galvanometers by using phototubes only 05. meter from the galvanometer mirror. The sensitivity of the system may be doubled by having two opposite arms of the bridge serve as resistance thermometers in the bath (*i.e.*, R_4 as well as R_1).

If a more sensitive galvanometer is used, or even to protect a less sensitive one while approaching the desired temperature, shunts should be used across the galvanometer. The multiple-contact switch should be of the shorting rather than the nonshorting type; thus the full emf of unbalance will never be thrown across the galvanometer while switching from one shunt to another.

Jack G. Roof, A Thermostatic Control System, *Electronics*, October, 1943, p. 166.

TIMING CIRCUITS

Electronic Timer for Photographic and Industrial Control Applications

Time intervals ranging from 0.1 second to 111 seconds for operation of photographic printing lamps and other control operations requiring uniform timing are provided by this simple circuit based on charging a capacitor through an adjustable resistance.

The accuracy of the resistors is important. The 43 tube has to be quite free from gas, and the grid-control capacitor must be free from leakage currents.

The line-voltage regulator and meter may be omitted if a high degree of accuracy is not needed. A change in line voltage of 5 per cent changes timing about 7 per cent, which is usually not noticed.

The relay is chosen to stand the full plate current of the 43 tube and to open at about 2.5 ma.

The principle of operation is based upon the change of plate current of the 43 tube, which operates the relay. Bias is supplied from one side of a 25Z5 rectifier tube, which passes through the time-control resistors to the grid of the 43 tube. The capacitor, being in parallel with the bias circuit next to the 43 tube, will have a charging time of 1 second for a ½ megohm of resistance. Other values of capacitance will change the time also, as may be desired in some cases. The other side of the 25Z5 rectifier tube supplies the plate voltage. A simple filter circuit is all that is needed, as current requirements are small. The line ballast resistor is chosen for the two tubes used and the line voltage encountered. The cathode resistor is used to protect the control tube from excessive plate current.

Switch *S* is the control switch for operating the relay. In the Off position the capacitor is discharged, and the grid goes to a high negative potential. This opens the relay. When this switch is turned on, with one or more of the time-control resistors in the circuit, the bias is low, causing the plate current to close the relay, while the capacitor charges and the plate current lessens. The relay will open when its current reaches 2.5 ma. The time interval switches may be used in combinations to produce steps of 0.1 from 0.1 to 111.

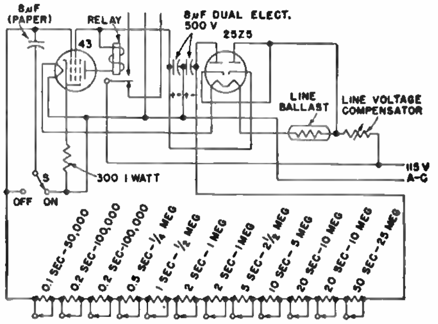

E. A. Milligan, An Electronic Time Control, *Electronics*, January, 1940, p. 50.

Thermionic Time-delay Relay Circuit for Accelerated Life Tests of Components

This simple, inexpensive, highly practicable thermionic time-delay relay can serve for such applications as repeating or cycling life tests in developmental and production-checking work. An example is accelerated life tests on new types of resistors. The time-delay relay offers on and off timed intervals of from 1/20 second to a full minute, and by adding proper resistors in series with controls *RC* (charging resistor control) and *RD* (discharging resistor control) longer timed cycles can be obtained. With suitable paper capacitors and volume controls, the unit may be readily calibrated to read in time-delay seconds.

The 25Z5 tube is operated as a voltage doubler and delivers pulsating d-c power of 250 volts (approximate). One half of the rectifier tube supplies the plate power for the type 43 tube, which operates the relay. The other half provides a negative bias voltage for charging *C*.

Since the charging voltage affects the time-delay constant of the entire unit, a variable charging voltage is employed. This is obtained by means of the 10,000-ohm wire-wound potentiometer.

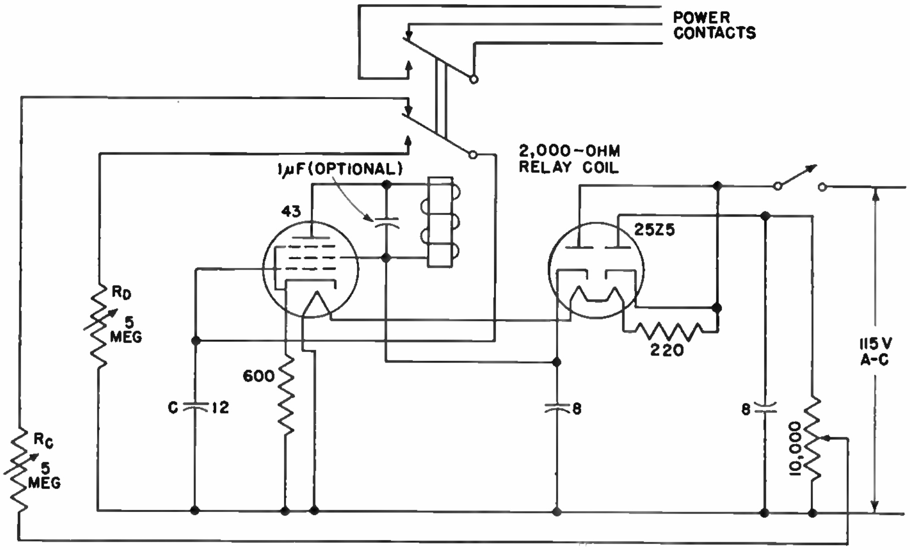

For time cycles greater than 1 minute, extra fixed carbon resistors (about 20 megohms) may be connected in series with the charge and discharge potentiometers *RC* and *RD*. With such an arrangement time cycles of more than 30 minutes may be obtained.

It is of prime importance that *C* be a good-quality paper capacitor with a very high leakage resistance.

The relay must have at least two sets of moving contacts, one controlling the charge and discharge of *C*, and the other acting as a power switch for the connected device or load under cycling test. Because of the relatively high impedance of the 43 tube's plate circuit, a high-resistance relay winding is necessary for proper power transfer. The relay should operate on a current of between 5 and 30 milliamperes.

George Mucher, A Thermionic Time-delay Relay, *Electronics*, April, 1936, p. 38.

Basic A-C-operated Thyratron Timing Circuit for Industrial Applications

A THYRATRON timing circuit for industrial use is here reduced to its simplest working components. With a source of alternating current connected to L_1 and L_2, the tube heater will be energized by transformer T and rectification will occur in the grid-cathode circuit. As a result, a charge of the indicated polarity will accumulate in C. When the switch is closed, the cathode is directly connected to L_1 and the full line voltage is applied to the plate-cathode circuit. However, the grid is biased negative by the charge accumulated in C, which charge effectively blocks space current until sufficient time has passed for the charge to be dissipated through R.

The grid-cathode voltage at any instant is composed of an alternating voltage, the magnitude of which is a function of the position of the slider on V, and the voltage across C. T is connected so that when L_2 is positive with respect to L_1, point B is negative. Consequently, movement of the slider toward B increases the negative component of grid alternating voltage when L_2 is positive. Since the tube will fire or ionize only when L_2 is positive, the adjustment of the slider on V permits a considerable reduction in the component of grid voltage supplied by C in order to prevent ionization of the tube.

If a maximum time period of, say, 2 minutes is required, approximate values of R and C are selected and the slider is set to yield 2 minutes with R at a maximum. R is then varied to secure time intervals between zero and the selected maximum. The phasing of the transformer to make B negative with L_2 positive is used instead of the opposite phasing as it tends to reduce the magnitude of R and C.

The tube fires at the expiration of the time period and supplies the load L (which may be a relay) with rectified alternating current within the limitations of the tube, if the constants of L are suitably selected. L remains energized until the switch disconnects K from L_1, at which instant L is deenergized and C starts to be recharged.

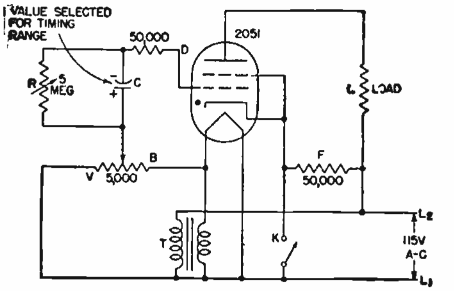

By properly proportioning C, R, D, and F, recharging of C requires but a few cycles, after which the cycle may be repeated. Resistor D is included to limit grid current during the charge period and during firing. The screen serves a dual purpose as it increases the control factor (about 100 in the 2050–2051 as compared with 10 in the 884–885) and also takes the brunt of the ion discharge during firing, protecting the cathode and grid, whose functions are more electronic than ionic because of this construction. The resistor F is simply to connect K to L_2.

Gilbert Smiley, Control Circuits for Industry, *Electronics*, January, 1941, p. 29.

Electronic Time-interval Meter Circuit for Microsecond Intervals

IN this time-interval meter circuit, a capacitor is charged for the exact duration of the interval, and the capacitor voltage is then measured with a vacuum-tube voltmeter calibrated to read directly from 0 to 140 microseconds with an accuracy of more than 2 microseconds. Uses include measuring propagation velocities, reaction rates, time lags of relays, projectile velocities, and fuse firing times. With appropriate circuit changes the time-scale range can be extended up to several milliseconds, and with some additional precautions even shorter microsecond intervals can be measured.

Two electrical impulses, representing the beginning and the end of the time interval to be measured, are each fed to a control tube. When control tube VT_1 receives the on pulse, it causes tube VT_4 to pass current and begin charging capacitor C. When control tube VT_2 receives the off pulse, it causes VT_4 to block. Thus capacitor C is charged to a value depending on the time interval over which current passes into it. A vacuum-tube voltmeter VT_5 reads this voltage, and can be calibrated directly in units of time.

The control tubes are type 2051 gas tetrodes. There is no appreciable delay in the firing action of such tubes, as the ionization time is less than 1 microsecond.

In principle, when the type 9001 current-controlling tube (VT_4) is at rest, it has zero control-grid voltage and negative screen-grid voltage (with respect to cathode), resulting in zero plate current. The on pulse is responsible for immediate application of a positive voltage pulse to the screen grid of this tube, causing it to pass plate current. This positive pulse is made to last for a time longer than the time interval to be measured.

The off pulse, arriving while the screen grid of VT_4 is still positive, causes immediate application of a negative pulse to the control grid of this tube, thus cutting off its plate current. The negative voltage pulse on the control grid will last a longer time than the positive screen-grid voltage swing, so that the control grid of VT_4 does not return to zero bias until the screen grid has first returned to its at-rest negative potential. Plate current therefore stays at zero after an off pulse.

The on and off pulses must be of positive polarity at the input with respect to ground. They may be capacitively coupled to the input, or direct-coupled if more convenient and not disturbing to the d-c grid voltages on the input tube. Gas tetrodes are preferable to gas triodes, in order to have a minimum of capacitive coupling from grid to plate and to avoid errors due to surges or pulses following the phenomenon to be measured. An input pulse fires its gas tube, which transmits a negative voltage pulse through capacitive coupling to the following tube. The gas tubes remain conducting once they have been fired, until their plate voltage is removed momentarily by operating a pushbutton switch. Neon bulbs N_1 and N_2 glow to indicate that the associated gas tubes have been fired.

The polarity of the negative pulse from VT_1 (produced by the on pulse) is reversed by VT_3, thus producing a positive pulse that is applied to the screen grid of VT_4. The duration of this positive pulse depends on the time constant of R_1C_1 or R_3C_3, whichever is smaller. Here R_1C_1 governs, and the pulse stays positive for a duration of approximately 0.005 second. If no other pulse arrived, VT_4 would stay conducting for this interval. However, the negative pulse produced by VT_2 upon arrival of the off

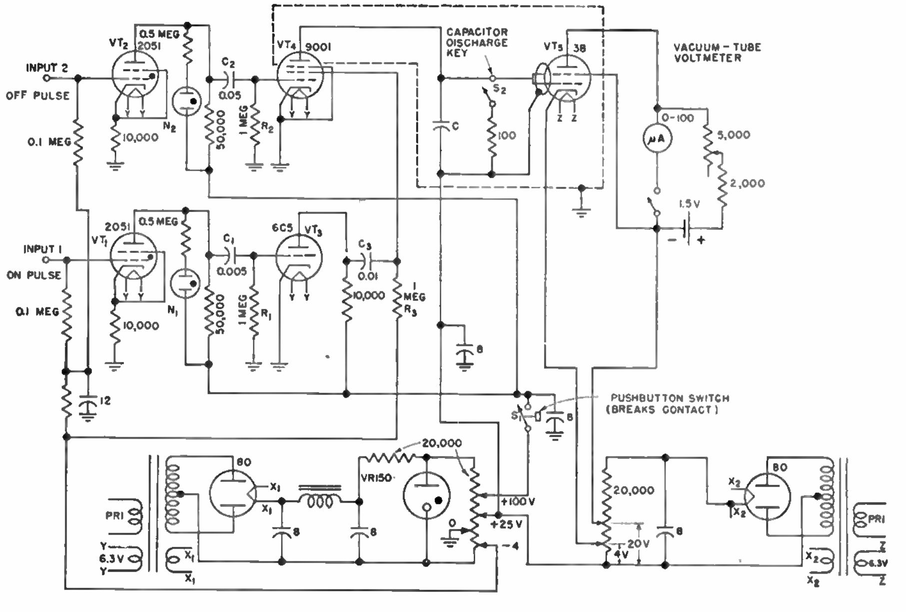

pulse is applied to the grid of VT_4 and immediately cuts off its plate current. This pulse on the grid will decay with a time constant determined by R_2C_2, which is 0.05 second (10 times longer than for the screen-grid pulse). In this way VT_4 cannot conduct at any time after the event to be measured has occurred.

Capacitor C is charged by the plate current of VT_4 during the pulse interval. A 1-μf capacitor should have a leakage resistance above 250 megohms; a 0.1-μf capacitor should be above 2,500 megohms. Such capacitors are now obtainable.

The vacuum-tube voltmeter must have an input impedance that is larger than 2.5×10^9 ohms for a 0.1-μf charging capacitor. The type 38 tube has good grid-impedance characteristics if used properly. Since the input impedance is determined by the grid current, the tube must be operated at a small cathode current. This current is about 0.4 ma in the circuit shown, and is obtained with a plate voltage of about 20 volts and a grid bias of about −4 volts.

To avoid surface leakage, the top of the tube can be dipped in a molten nonhygroscopic wax. Another good precaution is painting the rest of the glass envelope with colloidal graphite (Aquadag); when connected electrically to the cold end of capacitor C, this serves as an electrostatic shield, as a guard ring for leakage, and as a light shield. (Illumination often produces a grid current due to photoelectric liberation of electrons on the grid electrode.)

Leakage from the plate lead of VT_4 is also important. A polystyrene socket is or none at all recommended.

Operation of the instrument is simple. Pushbutton switch S_1 is pushed to break the discharge current through VT_1 and VT_2 if they were previously fired. Neon bulbs N_1 and N_2 must now be dark. Key S_2 is next closed to discharge capacitor C, and the output meter is adjusted to zero by means of the rheostat. The apparatus is now ready for the measurement. After the on and off pulses arrive, the meter is read.

Before each measurement, capacitor C must be fully discharged by a key arranged so that no additional dielectric problem is created.

To provide greater sensitivity, the output meter circuit is balanced using a 0.1-ma instrument. It is most convenient to use a dry cell as the source for the balancing potential, since the drain is only a fraction of a milliampere. Voltage drop due to aging over a period as long as a year or more is immaterial since balancing current can be adjusted with the 5,000-ohm rheostat.

For calibration of the instrument, a source for the production of two transients (pulses) with variable and known time spacing is required. If so desired, such a calibrating circuit can be incorporated in the apparatus to provide a permanent means of rechecking.

Paul B. Weisz, Electronic Timer for Microsecond Intervals, *Electronics*, April, 1944, p. 108.

Transient-pair Generator for Calibrating Electronic Microsecond Timers

A CIRCUIT for the production of transient pairs used in the calibration of electronic microsecond timers, with variable and known time spacing between the individual pulses of the pair, is easily constructed. Operation is based on the time it takes for a known capacitance C to charge from an initial voltage E_0 to a known voltage E_2 by application of a known voltage E_1 through a known resistance R.

The circuit uses a gas discharge tube of known flashing potential E_2. The initial voltage, before operating the mercury-pool key, is $E_0 = 0$ volts. When the key is pressed, a known voltage E_1 is applied. With three different capacitances C and a variable resistance, three ranges are obtained for the time of delay between pulse 1 and pulse 2, the latter of which will occur as a result of the delayed ignition of the discharge tube. The voltage-regulator tube VR105 (lower tube) can be used as a discharge tube. Its flashing potential is accurately reproducible, and was found to be $E_2 = 138$ volts ±1 per cent for four different tubes tried. Such cold-cathode gas discharge tubes introduce an intrinsic time lag which has to be taken into account. Under normal conditions, this time lag would be random and unpredictable, rendering the tubes worthless for this purpose. However, sufficient illumination from a steady source of light produces sufficient photoionization in the tube to eliminate all randomness, and simply yields a consistent time lag which, for the VR105, was found to be approximately $t_e = 2.5 \times 10^{-5}$ second for four different tubes.

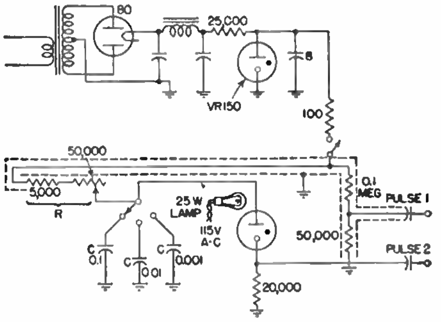

The source of light is made a permanent part of the apparatus, in the form of a 25-watt light bulb mounted so as to irradiate the VR105 through its top.

Paul B. Weisz, Electronic Timer for Microsecond Intervals, *Electronics*, April, 1944, p. 108.

Precision Timing Circuit for Intervals up to 50 Seconds

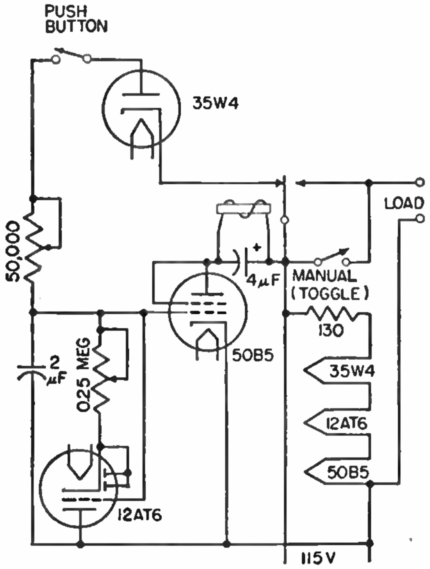

WITH this timing circuit, electrical equipment can be turned on and off automatically and precisely after a definite time interval that is adjustable from ½ second to 30 seconds, as required in such applications as controlling exposure time in a photographic printer or enlarger. Adjustment of the timing range is provided by a single low-resistance control. By setting this control at any desired point in this range, the required time interval may be obtained by simply pressing a button.

The timing control is a 0.25-megohm variable resistor in the cathode circuit of a triode. Pressing the pushbutton charges the 2-μf capacitor negatively, causing the relay to open. The discharge current from the capacitor flows through the triode and through the variable cathode resistor, which places a negative bias on the triode grid. This causes the triode plate resistance to increase, depending upon the value of discharge current. The degenerative effect produced permits use of a low-resistance control to obtain a wide range in the value of the plate resistance of the triode.

As the capacitor discharges, the negative voltage controlling the 50B5 tube is reduced to the point where sufficient current flows through the relay to cause it to close again. The degenerative action of the triode maintains a high rate of change of current through the relay, ensuring positive action.

The variable resistance in the charging circuit provides a means of compensation for variation in tubes and in line-voltage conditions. This control is intended for initial adjustment of the instrument but may be employed at any time to correct the calibration.

Donald G. Haines, Variable Timing up to Thirty Seconds, *Electronics*, July, 1946, p. 154.

Thyratron Timing Circuit Providing Time Cycle Range of 0 to 18 Seconds

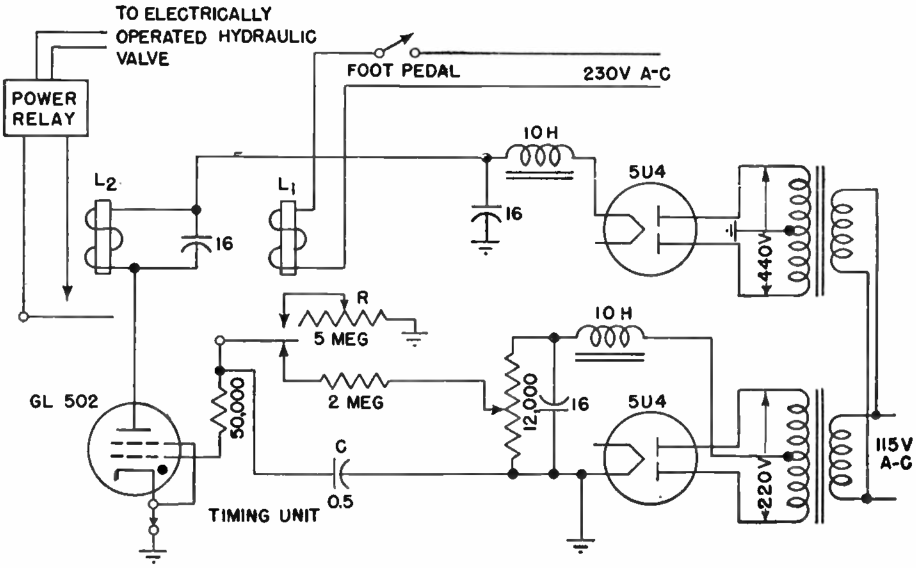

THE precision electronic timing circuit shown here provides accurate predetermined delay intervals of up to 18 seconds between operation of a foot switch and actuation of a solenoid-operated valve that opens a die-casting machine. The control grid of the type GL502 thyratron controls the flow of current between cathode and anode, and can be biased to cutoff without removing the plate voltage.

A negative potential up to 200 volts may be applied to the control grid of the tube. This can be drained off to ground—in this instance through a variable resistor to ground—until the voltage ranges from 3.75 to 0.9 volts at which point, depending upon the performance of the individual tube, the tube fires. To restore the tube to normal, high negative bias voltage is applied to the grid.

In the cycle of operation, the operator closes the die-cast mold, and pours molten metal from a ladle into the machine. He then steps on the foot pedal that rams the molten metal into the mold at high pressure and at the same time closes the initiating relay on the electronic timer, starting the timing cycle.

The contacts of the initiating relay L_1 normally apply the bias to the control grid of the tube and the tube is quiescent. Operation of the foot pedal actuates the 220-volt relay coil L_1, causing the bias to be removed from the tube and allowing capacitor *C* to discharge slowly through variable resistor *R*. This resistor allows the timing cycle to be changed from 0 to 18 seconds as required by the shop foreman. Up to 25 such timers, each for a different machine, may be operated in parallel from the power supply shown.

When the negative potential at the grid decreases to the proper value, the tube fires. The firing of the tube causes plate-current flow to operate relay L_2. This relay in turn operates a second and heavier solenoid that actuates a solenoid hydraulic valve to open the die-casting machine.

When the machine begins to open, the operator takes his foot off the pedal, pulling the ram back. This also removes the current from the coil of the initiating relay, allowing the contact arm to snap back and apply the bias voltage to the control grid of the tube, causing the tube to cease firing and complete the cycle.

Gerald DeLong, Timer for Diecasting Machine, *Electronics*, March, 1947, p. 110.

Sequence Timer for Microflash Units

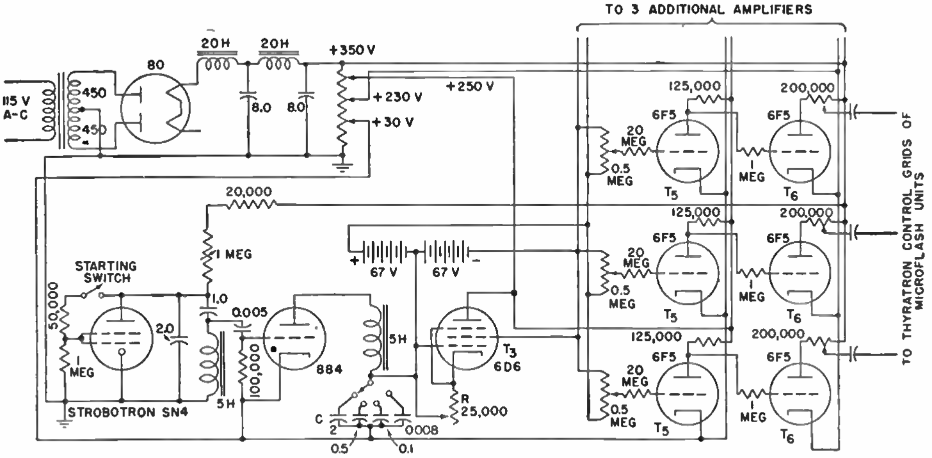

THIS timer, which is in effect a high-speed electronic commutator, is capable of firing from two to six microflash lamps in sequence. The time interval between the first and last flash may be adjusted from 0.00035 to 0.57 second, with either equal spacing or any desired irregular spacing between flashes. Applications include taking successive photographs to determine projectile velocity before and after penetrating armor plate, photographing successive stages of bursting of a turbo-supercharger rotor, and photographing any other high-speed mechanical action. Separate microflash units are required here because it takes 2 or 3 seconds for a unit to recharge and this is far in excess of the duration of the desired action being recorded. A single ordinary press camera is employed in a darkened room, with open shutter.

The flash sequence can be initiated by a mechanical switch or by connecting to the starting switch a microphone arrangement positioned to pick up the sound that initiates the action, such as the firing of a gun. The starting switch triggers, or fires, the type SN4 strobotron by making its grid positive. The resulting discharge of the 1.0 and 2.0-μf capacitors in the strobotron plate circuit swings the grid of the 884 gaseous triode positive enough to make it conducting, causing capacitor C to discharge through the 884. This capacitor was previously charged through the 6D6 pentode by energizing the timer before the microflash units were connected.

The action so far has only served to introduce a time delay ahead of the first flash, the duration of which depends on how long it takes C to discharge to the point where the 884 extinguishes. Different values of C can be switched in to change this delay as required for different distances, say, between gun and armor plate. Now the sequence timer action starts; C begins charging again through the pentode, with the voltage across C rising at a rate determined by the capacitance of C and the resistance setting of R. This voltage swings the grids of all six amplifiers in a positive direction from initial negative bias values determined by the potentiometers in individual channels.

The first amplifier channel to become conducting produces a pulse in the output circuit going to the thyratron control grid of its microflash unit, causing the unit to flash. In sequence each other channel triggers its flash as the voltage across capacitor C continues rising.

Initial adjustments of the potentiometers to the desired intervals between flashes can be made by photographing a motor-driven disk on which is painted an arrow. Each flash produces one arrow image on the negative, and time between flashes is proportional to angular spacing of arrows.

Charles H. Coles, Electronic Timing of Sequence Photographs, *Electronic Industries*, February, 1946, p. 74.

Thyratron Circuit for Controlling Electric Stop Watch

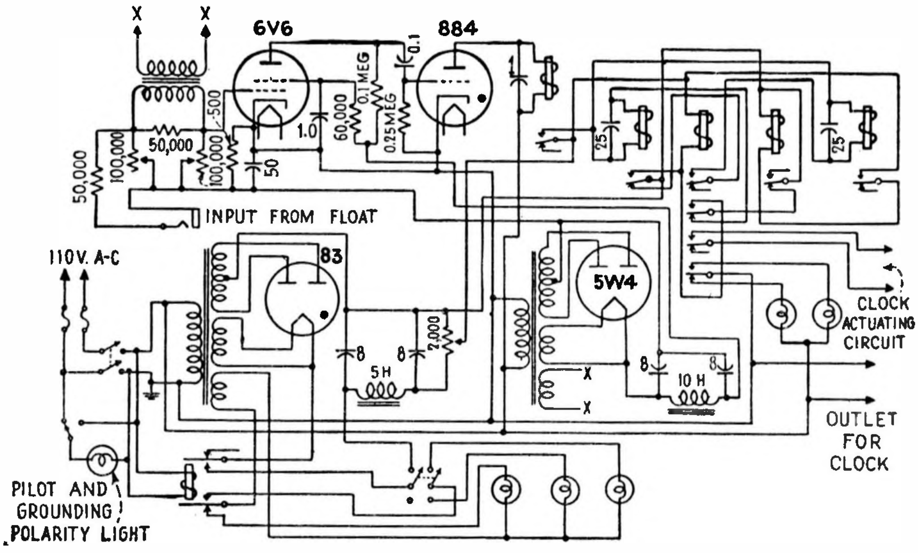

THE thyratron-controlled relay circuit shown was originally developed for timing the passage of floats between fixed points in a model waterway. The float contacts a wire as it passes the starting point, producing a momentary high-resistance contact sufficient to fire the thyratron tube and its associated relay. This operation starts the electric stop watch, locks out the relay circuit for a fraction of a second to prevent any effects from bouncing of the float on the initial contact, and then sets up the relay circuit to drop out on the next contact. Passage of the float under the second cat-whisker wire results in stopping of the stop watch, temporary locking out of the relay circuit, and then restoration of the relay circuit to the starting condition. This circuit makes it necessary to use only one lead wire from the contacting frame to the thyratron circuit, which enables the operator to make a very sensitive adjustment of the operating point.

Eugene H. Woodman, Electronics Aids Waterway Development, *Electronics*, September, 1945, p. 120.

Automatic Machine Time-cycling Control Circuit for D-C Operation

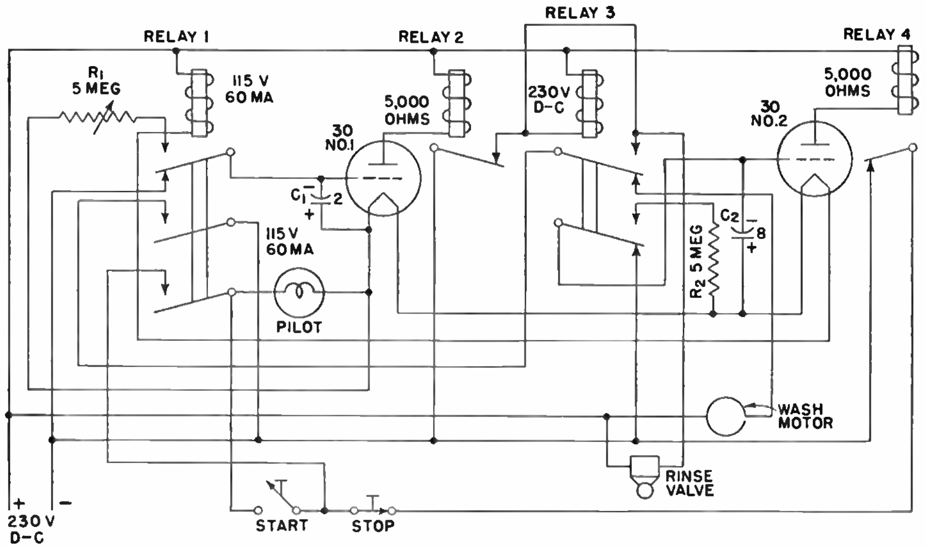

THIS control circuit was developed to operate an automatic dishwasher from 230 volts direct current. The operation may best be understood by a description of the operating cycle with reference to the circuit.

At the start of the cycle the unit is connected to the d-c mains as shown. C_1 and C_2 are charged to the full 230-volt potential of the indicated polarity.

The start button is pressed, shunting the lower contacts of relay 1. This establishes a series circuit through the coil of relay 1, the two filaments, the pilot light, the stop button, and the contacts of relay 4, energizing the tube filaments, pilot lamp, and relay 1. This relay shunts the start button (lower contacts), applies 230 volts to the wash motor (center contacts), disconnects C_1 from the 230-volt minus, and connects R_1 across C_1 to start the discharge cycle.

The quick-heating type 30 tubes are ready to operate promptly, but some time (about 2½ minutes) is required for C_1 to discharge through R_1 to the point where the bias on the type 30 tube number 1 permits relay 2 to operate.

Relay 2 operates, in turn energizing relay 3, which disconnects the wash motor and starts the rinse valve. At the same time C_2 is connected to R_2 for discharge.

C_2 discharges in about 10 seconds, at which time relay 4 operates, opening the holding circuit and turning everything off.

Thus the device provides a complete automatic cycle, circulating the alkaline wash solution with a motor-driven pump for 2½ minutes, shutting off the pump and turning on a hot water rinse for 10 seconds, and then turning everything off, including itself.

Gilbert Smiley, Control Circuits for Industry, *Electronics*, January, 1941, p. 29.

Combination Photoelectric Relay and Gas-triode Timing Circuit

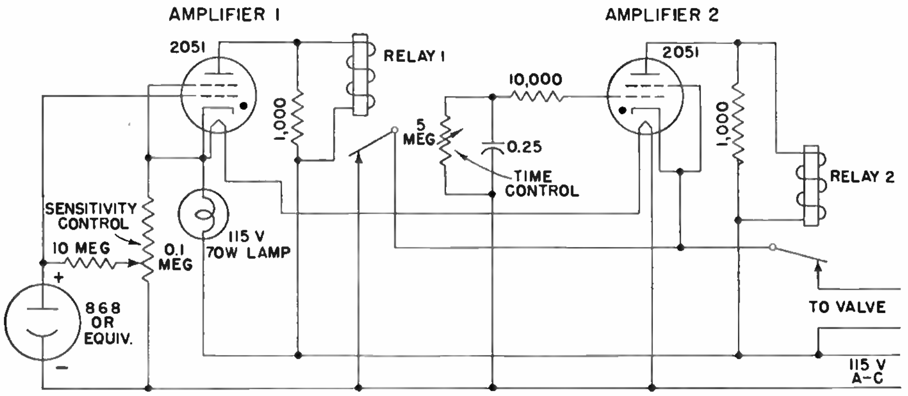

THIS combination photo-relay and time-delay circuit is used to control an air-doffer in a laundry, which is used to form neat piles of laundered articles. It was developed to stack hot towels, pillow slips, and other flat articles emerging from a laundry mangle on a conveyer. The conveyer belt consists of several parallel webs, and through one of the interstices the light source throws its beam up to a mirror and back into the phototube.

Increased conductivity of the phototube (from increased illumination) will make the grid of amplifier 1 more positive and that of amplifier 2 more negative, and vice versa. Thus increased illumination will cut off the plate current of amplifier 2, destroying the negative bias on gas tetrode 2 and energizing relay 2. Decreased light energizes relay 1. By proper adjustment of the potentiometers practically any desired range of illumination can be accommodated and the illumination levels for energization of the relays can be widely spaced, brought together, or even overlapped.

The leading edge of the article to be doffed intercepts the light beam energizing relay 1, opening its contacts, and recycling gas tetrode 2 and relay 2.

The article advances, its leading edge dropping down over the end roll of the conveyer, directly beneath which is a perforated pipe system and in front of which is a rack onto which the article is to be doffed.

As the following end of the article is about to leave the conveyer, it restores the light beam, closing relay 1, which energizes the solenoid valve admitting air to the blower pipe, starting the article in its flight from conveyer to rack, and starting the timing period of gas tetrode 2.

Gas tetrode 2 times out, opening the solenoid valve circuit, stopping the blast, and restoring the circuit to start a new cycle.

By proper design of the pipe system and accurate regulation of air pressure and timing, articles can be stacked with amazing accuracy.

Gilbert Smiley, Control Circuits for Industry, *Electronics*, January, 1941, p. 29.

Timing Circuit for A-C Electric-fence Controller

THE circuit given here delivers half-cycle impulses of power-line frequency at 1-second intervals as required for electric-fence controllers, intermittent life tests, and similar applications requiring timing impulses that have periods from a fraction of a second to several minutes, the timing being variable by adjustment of *RC* circuit constants.

The timing periods that may be obtained are multiples of the period of the power-line frequency, so that for 60-cycle power the period is $n/60$ seconds. The circuit may therefore be considered as a frequency divider. It operates directly from the a-c source without a d-c power supply.

When the circuit is first energized, there is no charge on capacitor *C* and therefore no bias on the first tube. This tube conducts during the first half cycle that makes its plate positive with respect to the filament, charging the capacitor to the peak of the supply voltage less the tube drop. The polarity of *C* is such as to make the grid negative with respect to the cathode, and conduction cannot occur during subsequent positive half cycles until the charge on *C* has been sufficiently reduced by discharge through resistor *R*. The time for this discharge may be adjusted over a wide range by suitable choice of values for *R* and *C*. The blocking voltage for the second tube is obtained across *C*.

At certain critical values of *RC* there may be an indeterminacy of one cycle in the time period, due to slight random variations in operating conditions. Where precise timing is required, the time constant should be carefully adjusted and the line voltage maintained constant.

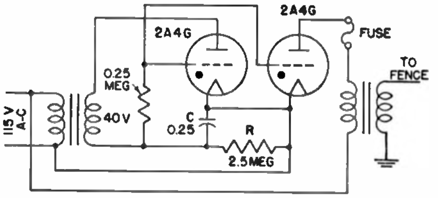

With the grids of both tubes tied together and with filaments similarly connected, the voltage across *C* controls conduction of the second thyratron, which in turn applies half-cycle impulses to the electric-fence transformer for the period during which *C* discharges. The fuse is included in the plate circuit as protection against continuous energizing of the fence in case the first thyratron fails to operate and provide a blocking voltage. Failure of the second thyratron deenergizes the fence, causing no danger.

Clifford E. Berry, Low-frequency Timing Circuits, *Electronics*, October, 1942, p. 84.

Circuit for Measuring Effective Shutter Speeds and Setting Flash-bulb Synchronizers

THIS electronic circuit measures the effective speed, not the total open time, of a camera shutter easily and accurately in daylight on all types of cameras, as fast as the shutter can be operated. It can also be used to set flash-bulb synchronizers by arranging the bulb to send its light through the lens and setting the synchronizer to obtain maximum deflection on the timer. The unit forms a simple compact device suitable for counter use in camera stores.

A phototube is connected to produce a current that is proportional to the light intensity reaching it through the camera lens and shutter. The phototube is in series with a capacitor and a direct-voltage source so that the total charge accumulated by the capacitor will be directly proportional to the actual exposure, regardless of the variation of intensity during the open period of the shutter.

The voltage across the capacitor is measured with a vacuum-tube voltmeter which has a meter scale which is marked to read shutter speed directly in reciprocal seconds. Calibration is obtained by marking the scale in terms of the full-scale deflection obtained with constant light intensity. The meter reading then will be the ratio of the voltage built up in the capacitor during measurement, to the standardizing voltage during calibration. These voltages are $e = Q/C$ and $E = IR$, respectively, from which the effective exposure time is found to be proportional to RC_e/E.

The instrument is standardized by adjusting the intensity of the light source for full-scale deflection with the shutter held open. Next the shutter is closed, and *C* is completely discharged through *R*. The pushbutton is now depressed, disconnecting *R*, and the shutter is operated. The meter then reads the voltage to which *C* has been charged and directly indicates the shutter speed. Releasing the pushbutton discharges *C* and restores the meter to zero reading for the next test.

It is desirable to use a meter capable of full-scale deflection between 0.2 volt and 4.0 volts for the negative charging voltage of 50 volts in this circuit, thereby confining the useful operating characteristic of charge versus time to a practical region of linearity, excluding the true exponential portion of the capacitor charging characteristic. The circuit shown will cover a range between 1/5,000 second and 2.0 seconds.

It is also possible to select ranges by switching different values of resistors instead of capacitors. Although this is advantageous in some cases, the latter case permits one calibration setting for all ranges.

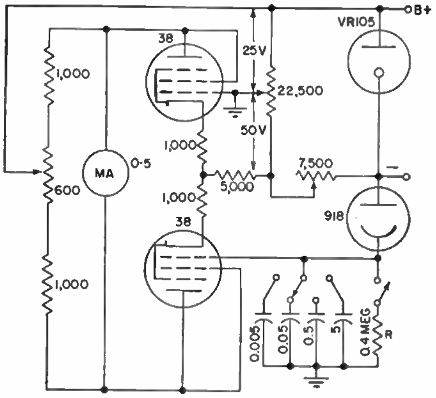

The input current to the voltmeter circuit is 10^{-12} ampere. With the circuit values shown, this will produce in 2.0 seconds approximately a 0.1 per cent loss of charge from a 1/1,000-second exposure. The meter needle therefore holds its maximum position amply long for a reading. Careful balance, generous feedback, and a voltage-regulator tube afford stability in respect to line-voltage fluctuations.

Normal 4 per cent 120-cycle modulation of light intensity obtained with a tungsten lamp on 60-cycle alternating current produced no appreciable error in respect to readings taken with direct current connected to the lamp.

C. J. Penther, Speed Meter for Camera Shutters, *Electronics*, May, 1944, p. 164.

Ballistic Galvanometer Circuit for Measuring Speed of Automobiles

A BALLISTIC galvanometer serves as the indicating and recording element in this circuit for measuring the speed of automobiles and other moving objects. A current is caused to pass through a thyratron and the galvanometer during the time that the moving object passes between two fixed points. Either phototube relays or mechanical switches can be located at the fixed points to operate the circuit. The mass of the moving element in the galvanometer must be increased so that one-quarter of its natural period exceeds the longest time to be measured. With a moving mass of about ¼ pound and a spring tension such that the period is 2 seconds, the graph of time intervals versus deflection for a constant current corresponding to an automobile speed over a 15-foot interval at 20 miles per hour is approximately 0.61 second.

The time required for a moving object to actuate switches at two fixed points a known distance apart is indicated directly in the desired units by the recording ballistic galvanometer in this thyratron circuit. The thyratron becomes conductive when the object momentarily closes the first switch S_1, and stops conducting when the object reaches the second point and momentarily closes switch S_2. Phototube relays may be used in place of mechanical switches where contact is not feasible, as in timing horse races.

A heated recording stylus moving on waxed paper is neat and simple. Since the stylus travels over the paper at a fairly high velocity, it is necessary that it ride lightly on a taut strip. Switch S_3 is actuated by the moving element of the galvanometer to prevent acceptance of another indication until the stylus of the recorder is at rest.

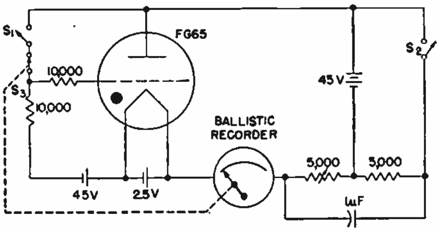

Herbert J. Reich and Hershel Toomin, A Ballistic Meter for Measuring Time and Speed, *Rev. Sci. Instruments*, February, 1941, p. 96.

Twin-thyratron Chronoscope Circuit for Measuring Millisecond Intervals

ORIGINALLY developed to measure the velocity, or time of flight, of a projectile between two fixed points, this combination of two thyratrons and a ballistic galvanometer measures intervals between 1 and 200 milliseconds with an accuracy within 1 per cent of full scale.

The operating principle involves passing a known current through a ballistic galvanometer during the time interval to be measured. The length of time required for the meter to swing up scale is long compared with the time interval being measured, and hence the maximum deflection is directly proportional to the time interval. The galvanometer used has a period of approximately 5 seconds. Galvanometer current is supplied by self-contained batteries and the switching operation is performed electronically by the thyratrons.

In the simplified circuit (top center), with no voltages applied to the inputs, no current flows through the gas-filled thyratrons because of the negative voltage applied to the grids through R_9 from E_3. An impulse on No. 1 input at the beginning of the interval breaks down thyratron V_1, allowing a known current I to flow from E_1 through R_A, galvanometer G, and tube V_1. The impulse on No. 2 input at the end of the interval breaks down V_2, connecting E_1 and E_2 in series through R_A and V_2. The resulting increase in voltage across R_A lowers the potential of the anode of V_1 to the point where it extinguishes, thus cutting off the current through the galvanometer.

This type of thyratron switching circuit has been used instead of the conventional plate-to-plate capacitance-coupled circuit for two reasons. (1) The current I that flows through the galvanometer during a time measurement can be set in steady state without regard to transient current. (2) The circuit locks out so that after the galvanometer current has been cut off, subsequent impulses on No. 1 input cannot reignite V_1 until the circuit through V_2 has been broken. Experience has indicated that when switches are used on the inputs, the chatter time is of such time as to cause V_1 to reignite if this arrangement is not used.

In order to provide a complete and convenient instrument, the basic circuit requires numerous additions and refinements. Protection must be provided for the galvanometer in case of failure of the impulse on No. 2 input; otherwise a current would continue to flow through the galvanometer many times that required for full-scale steady-state deflection and would result in the destruction of the meter. Internal means must be provided for checking the ballistic constant of the galvanometer. A milliammeter and resistors must be included for adjusting the current to the proper values for the various scales. It also has been found desirable to provide the input circuits with an arrangement whereby they can be operated directly from either a make or a break circuit as well as from an amplifier. All these features are incorporated in the complete circuit shown.

First, consider the circuit for checking the ballistic constant of the galvanometer. With the key in the position shown, the galvanometer is damped by R_D. With S_{22} on position A and S_{11} closed, C_C charges to the voltage E_1, and the milliammeter is connected through R_V to read the voltage of E_1. When K_1 is thrown to the left, C_C discharges through the galvanometer and the ballistic constant k can be determined.

In order to set the current I, the switch S_{11}-S_{12} is thrown to the right, thereby disconnecting the calibrating capacitor and energizing the filament supply. With selector switch S_{21}-S_{22}-S_{23} on positions 1 to 5 and with K_1 to the right as shown, a circuit is provided from the battery E_1 through R_A, through V_1 when it is broken down, through R_G, and through the milliammeter circuit. This makes it possible to set I by means of R_{A2} to the proper value for the desired multiplying factor. The circuit provided by S_{22}, R_M, and R_1 changes scales on the milliammeter in accordance with the time scale selected.

In regard to the input circuits, consider input No. 1. The grid of V_1 is always biased to cutoff from E_3 in steady state. If S_3 is open and a make circuit is closed across the input, current flows from $+E_3$ through the external circuit to charge C_9

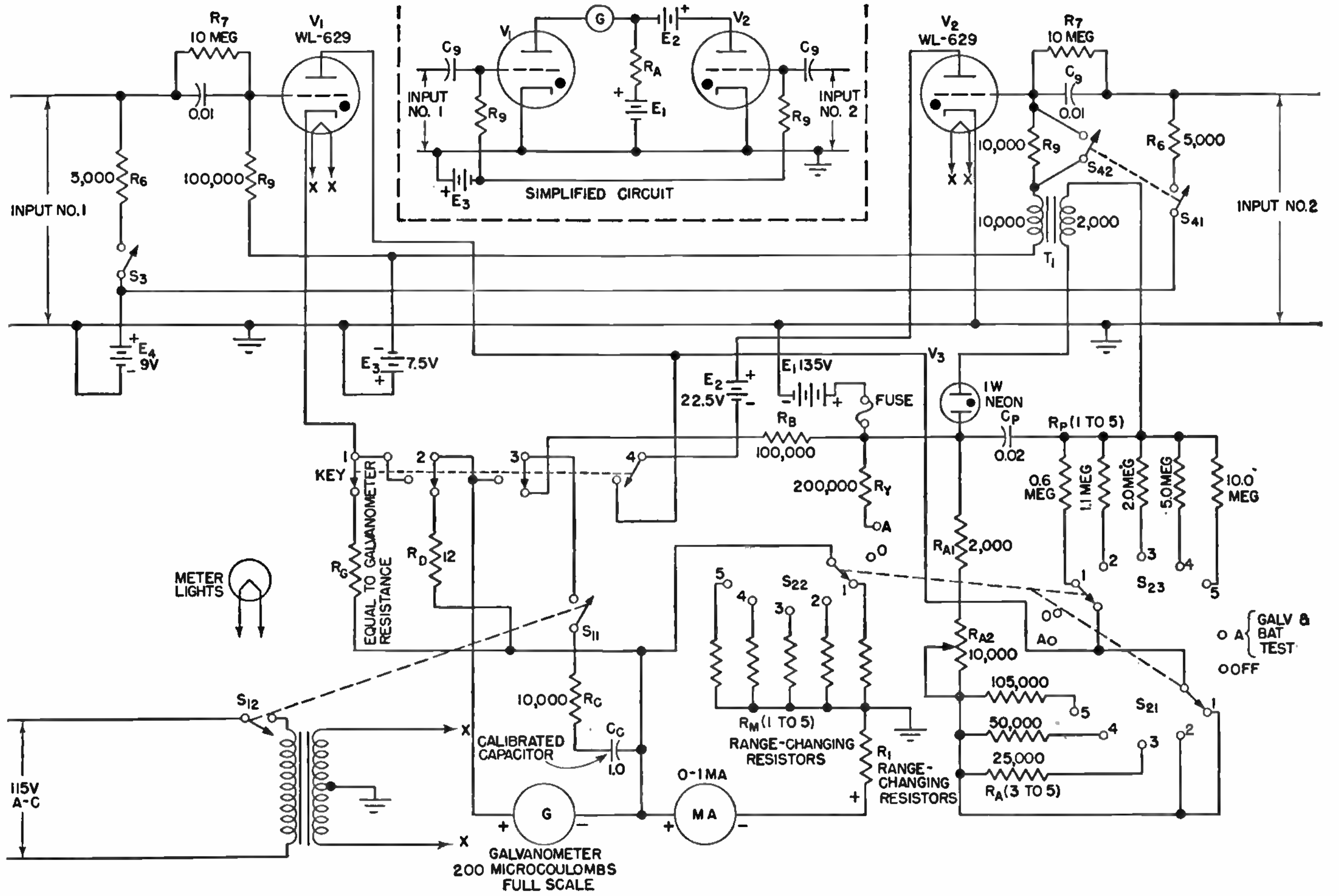

through R_9. This voltage developed across R_9 and applied to the grid is sufficient to cause V_1 to ignite. The resistance R_7 is extremely high and serves to discharge C_9 slowly in order to reset it for the next operation. Also, with S_3 open, any voltage applied to the input from an external source will appear directly on the grid of V_1 and will cause it to ignite. With S_3 closed the input circuit operates directly on a break as follows: The input is normally closed, and when the break occurs the voltage E_4 appears across the input terminals and through C_9 to the grid of V_1, causing it to ignite. The operation of input No. 2 is identical with that of No. 1.

The protective circuit consists of R_p, V_3, C_p, S_{23}, and T_1. The action is as follows: When V_1 breaks down, a voltage appears across R_A that is impressed on R_p and C_p in series. C_p continues to charge until its voltage reaches the breakdown voltage of the gas-filled tube V_3. The discharge of C_p through V_3 through transformer T_1 produces a positive kick in the secondary and trips off V_2 to turn off the galvanometer current. The length of time required for C_p to charge to the breakdown voltage of V_3 is selected by means of S_{23}. These values are so adjusted that the protective circuit operates on any interval longer than that required for full-scale deflection regardless of range.

Ganged switches S_{21}, S_{22}, and S_{23} select the five time ranges, 10, 20, 50, 100, and 200 milliseconds, and also provide means of reading the battery voltage and checking the ballistic constant of the galvanometer.

In making a series of measurements, the condition of the main batteries can be checked by the internal means provided. The ballistic constant of the meter can then be checked by the capacitor discharge method also provided. After the tube filaments are energized and the range is selected, the galvanometer current can be adjusted to the correct value in steady state. When these three points have been checked, full assurance can be had of the accuracy of the results obtained.

The principle used in the device in combination with the operation of the circuit results in high speed in making measurements. Furthermore, for the same two reasons, both tube life and battery life are extremely long.

C. I. Bradford, The Chronoscope, *Electronics*, November, 1940, p. 28.

Inductance Bridge and Electronic Timer for Protecting Machinery against Jamming

THIS combination of an inductance-bridge sensing circuit, a two-stage amplifier, and an electronic timer serves to shut off power to a punch press if the slugs are not cleared from the dies within 4 seconds. In normal operation, slugs evacuated through sensing coils prevent the timer from starting.

Properly ejected slugs pass into a funnel and through a coil as they are ejected from the die. Another coil, identical with the first, is mounted about 6 inches from the press near the first coil. These coils, marked L_1 and L_2, form the two reactance arms of a simple bridge circuit. A fixed resistance and a series fixed and variable resistance combination make up the other two arms of the bridge.

The variable resistance in one arm is used to balance the bridge circuit. Now, with the primary of transformer T_1 energized and the bridge balanced, the presence of steel in the sensing coil causes a change in the inductance of this

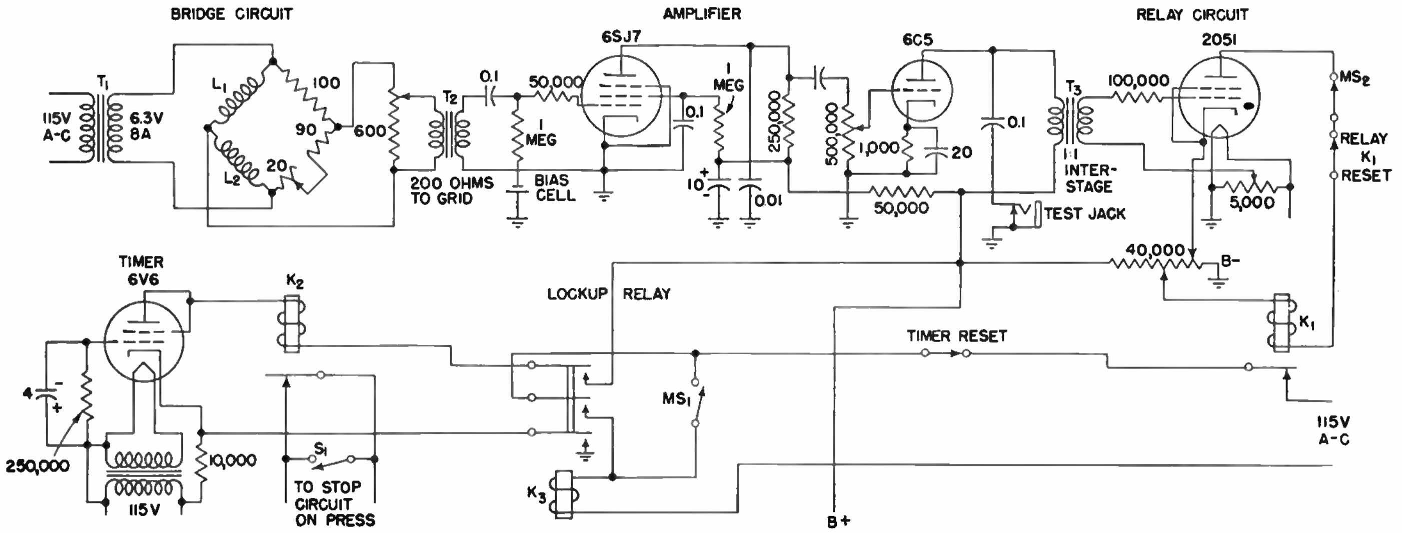

coil and thus unbalances the bridge. This unbalance voltage appears across the primary of transformer T_2.

A conventional two-stage amplifier using a 6SJ7, pentode connected, and a 6C5 amplifies the bridge output. Since this is at line frequency, 0.1-μf coupling capacitors have been used. The plate circuit of each tube is bypassed to ground to prevent any high-frequency feedback or regeneration that might be introduced. A test jack is provided in the plate circuit of the 6C5 so that an a-c voltmeter can be inserted when it is desired to balance the bridge.

Since compressed air is used to blow the metal slugs from the die, they pass through the sensing coil at a relatively high velocity. The bridge is unbalanced for only a fraction of a second, so that an ordinary relay cannot be made to operate satisfactorily on the amplified voltage. The relay is therefore connected in the plate circuit of a 2051 gas tetrode. In this type of tube, when the plate is positive, the tube will fire once the negative grid voltage is reduced to a critical value.

When the tube fires, the gas ionizes and the grid no longer has any control over the flow of plate current. Thus the amplified signal from T_3 is applied to the grid circuit of the 2051. When the instantaneous grid potential is reduced to the critical value, the tube fires and relay K_1 is energized. Switch MS_2 is opened by the punch-press cycle, and the unit is again ready to detect the presence of the metal slugs in the sensing coil.

It is necessary that the press be shut down if the die is not cleared after about three strokes. This is accomplished by the use of an electronic timer. The time delay is set for about 4 seconds (three strokes of the press), determined by the 4-μf capacitor and the 250,000-ohm resistor. When the plate and cathode circuits of the type 6V6 tube are disconnected through relay K_3, the cathode is connected to the hot side of the 15-volt line through the 10,000-ohm resistor. The capacitor and resistor combination connect from the control grid to the ground side of the line. The capacitor now charges because the grid and cathode constitute a half-wave rectifier. The charge leaves the grid negative with respect to ground. When relay K_3 is energized, the plate and cathode circuits are connected normally. No current flows through K_2 in the plate circuit of the 6V6 tube because of the negative voltage on the grid. The 250,000-ohm resistor discharges the capacitor so that the grid bias is decreased and plate current rises sufficiently to cause the relay to pull in. This relay remains energized until the plate and cathode circuits are again broken.

John Isaacs, Punch Press Protector, *Electronics*, December, 1946, p. 101.

Pulse Timing Circuit for Inductive Loads

This electronic timing circuit uses a type 2050 gas tetrode, with a 170-ohm resistor in the plate circuit to limit the capacitor charging current to the rated maximum of 1 ampere peak plate current.

A negative charge placed on the control grid of the tube leaks off at a rate determined by the *RC* combination in the grid circuit. When sufficient bias voltage has been lost, the 2050 conducts, closing the relay and charging the 6-μf capacitor, after which the plate voltage is too low for conduction to continue. The charge on the capacitor leaks off through the relay, thus keeping it closed for an additional length of time. One pair of relay contacts is placed in the load circuit; the other pair serves to replace the negative charge on the 2050 grid.

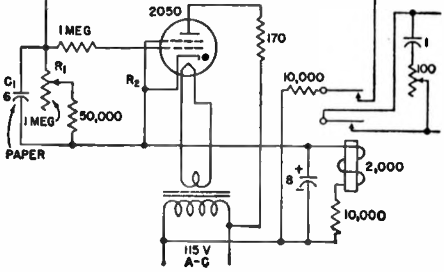

The pulse rate is determined by the setting of potentiometer R_1, and the range of rates upon the values of R_1, R_2, and C_1, making this circuit applicable to a large variety of timing applications.

Electronic Timer for Inductive Load, *Electronics*, October, 1946, p. 170.

Thyratron Capacitor-discharge Circuit for Timing the Operation of a Motor

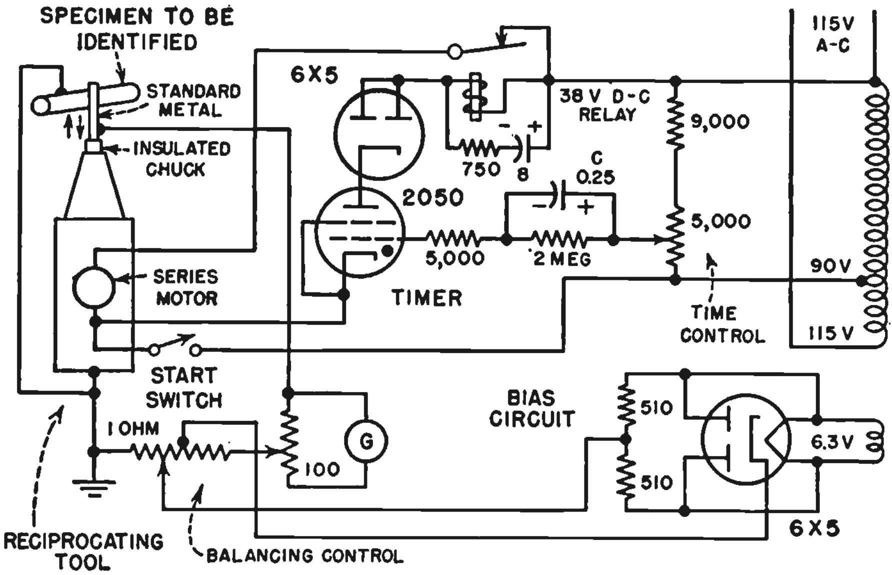

The electronic timing circuit shown has been used in connection with a portable metal-sorting instrument that sorts mixed-up bar stock, transformer laminations, billets, or castings according to chemical composition by rubbing a known metal against the unknown for an interval determined by discharge of a capacitor. The resulting triboelectric voltage is measured with a mirror galvanometer. The circuit controls the total operating time for a test and provides a biasing potential to balance out any parasitic or thermoelectric currents.

Capacitor *C* is normally charged from the 90-volt source to the indicated polarity by grid rectification of the 2050 thyratron, the circuit being completed through the series motor and the contacts of the relay each half cycle. When the start switch is closed, 90 volts alternating current is applied to the series motor in the reciprocating tool and to the thyratron timing circuit. Reciprocating action starts, but capacitor *C* holds the thyratron grid sufficiently negative to prevent the tube from firing. The start switch changes the grid voltage to a much lower value which is determined by the setting of the time-control potentiometer, so that *C* begins discharging through its 2-megohm shunt resistor the instant the switch is closed. When the capacitor voltage drops sufficiently, the thyratron fires and its plate current pulls in the relay, opening the motor circuit and terminating the test. A snubbing circuit across the relay coil (8 μf in series with 750 ohms) keeps the relay armature closed between rectified pulses. Releasing the start switch button allows the relay to drop out, reclosing the tool circuit and recharging *C* for the next cycle.

The reading of the galvanometer used as a microvoltmeter is taken after the tool has been automatically stopped. If the reading is substantially zero, known and unknown metals are identical; if different, the polarity and magnitude of the reading are indicative of the degree and nature of the dissimilarity.

The 6X5 tube, a slow-heating rectifier connected as a diode in the thyratron plate circuit, protects the thyratron against damage in the event that the start button is pressed before the thyratron heater is up to temperature.

N. F. Agnew, Sorting Alloys, *Electronics*, September, 1946, p. 124.

Direct-indicating Timer for Testing Camera Shutters

This time-measuring circuit makes use of the constant-current characteristic of a pentode to charge a capacitor to a voltage proportional to time for measuring percentage of deviation of a camera shutter from rated speed.

The 6SF5 tube acts as a combination amplifier and limiter. It is run normally at some bias such that the drop through its plate load resistor keeps the 6SJ7 beyond plate-current cutoff. A small negative signal then will drive the 6SF5 to cutoff and the 6SJ7 will become conductive and start charging the capacitor in its plate circuit at constant current. This charging current flowing in the cathode circuit and in the divider causes some regeneration due to R_1 and R_2, which effectively increases the gain of the circuit but is not sufficient to cause instability. The effect is somewhat counteracted by the degeneration in R_3, which is provided to keep the 6SJ7 grid in a region of greater current linearity.

For iris shutters the input phototube-amplifier arrangement (of conventional design and not shown) is such that the 6SF5 is driven to cutoff by a shutter-opening area equal to 1 per cent of total opening, remaining in that condition until the shutter is within 1 per cent of being closed. Thus the capacitor is being charged at constant current for the full open time of the shutter. With focal-plane shutters, the trapezoidal pulse from the amplifier is of sufficient amplitude to drive the 6SF5 to cutoff and to charge the capacitor for its duration.

One capacitor (C_1, C_2, or C_3) is used for each shutter speed to be covered, and a switch is provided to select the proper one. The capacitor values are so chosen that each one when charged for its indicated shutter speed will develop the same voltage. Switch S_1 is a telephone-type switch that connects the 6SJ7 plate circuit to the capacitor selected by the speed selector switch. When the shutter is operated and the capacitor charged, S_1 is thrown to its other position. This disconnects the capacitor from the plate circuit and places it in series opposition with a standard source of voltage.

If the shutter speed is exact, the two voltages will be equal and their resultant will be zero. If the shutter is in error, the voltages will differ and the resultant will indicate the direction and amount of error.

Switch S_3 is provided to discharge the capacitor completely before repeating the charging process.

It was found impossible to select conveniently capacitor values that were close enough to give an exact voltage for a given charging time; therefore voltage trimmers R_4, R_5, and R_6 were added. One of these is selected with each capacitor value and is adjusted to give the proper comparison voltage. This circuit is calibrated by applying electric pulses of known time duration from a commutator arrangement to the amplifier input.

The resultant of the capacitor and comparison voltages is fed into an indicator circuit through a 30-megohm resistor. This value is made high so that the capacitor will discharge slowly enough to provide a reliable reading for conditions of shutter error.

The 6J5 circuit is essentially a vacuum-tube voltmeter with a zero-center indicator. Shutter speeds higher than rated result in an upward deflection, low speeds in a downward deflection. As the voltages being compared for any shutter speed are the same, the indicator can be calibrated in percentage deviation from rated speed. The slight variations due to R_4, R_5, and R_6 do not introduce appreciable error. The full meter scale covers ±15 per cent error.

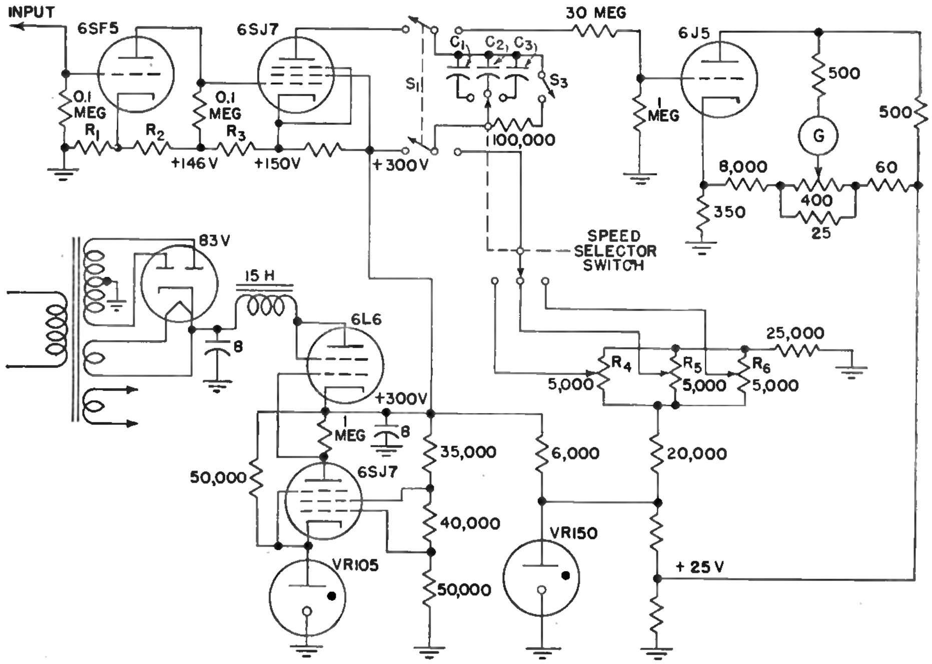

The circuit constants are such that large inputs cannot damage the 50-0-50 microampere meter, as the 6J5 reaches saturation slightly off scale on the upper end and reaches cutoff beyond the lower end. The circuit was arranged for shutter speeds of $1/125$, $1/250$, and $1/500$ second.

R. F. Redemske, Electronic Shutter-testers, *Electronics*, February, 1946, p. 128.

Phantastron Voltage-controlled Time-delay Circuit

THE phantastron circuit shown has the virtue of providing a time delay that is closely linear with control voltage. It is relatively insensitive to changes in supply voltages. In the steady-state condition, the control grid of the 6SA7 phantastron tube is held near zero bias by grid current since it is tied through a high resistance to +250 volts. The screen grid is positive with respect to the cathode. Grid No. 3 is negative with respect to the cathode since its voltage is set at about +20 volts by the voltage divider and the current flowing through the cathode resistor sets the cathode at about +40 volts. Since the No. 3 grid is negative with respect to the cathode, it cuts off the current to the plate. The cathode current is essentially all screen current. Since the plate resistor value is high, the plate voltage is held by conduction of the diode to a value equal to the voltage set on the diode cathode.

When a negative trigger pulse is fed to the cathode of the diode, a negative pulse will be developed in the plate circuit. This negative pulse is applied to the control of the 6SA7 through the capacitor connected between these two points. This will decrease cathode current and decrease the voltage drop across the cathode resistor. Thus, the No. 3 grid becomes less negative with respect to the cathode and will allow plate current to flow. Plate-current flow causes the plate voltage to drop, stopping the diode (half of the 6SN7) from conducting and applying the drop at the plate to the control grid through the capacitor.

The above action takes place so rapidly that the capacitor does not have time to change its initial charge appreciably. Since the grid is connected to +250 volts, the capacitor starts to discharge, raising the control-grid voltage. This increases the plate current, decreases the plate voltage, and tends to decrease the control-grid voltage. Since the two actions oppose each other, the result is a very slow decrease in plate voltage and increase in cathode voltage.

This effect continues until the plate and screen voltages are so low that further increase in control-grid voltage does not increase plate current. This occurs at a plate potential of about 40 volts. The control grid and consequently the cathode voltage continue to rise for a short time, with the screen taking the increase in cathode current. At this point grid No. 3 begins to cut the plate current off, with a consequent rise in plate voltage. This plate-voltage rise is fed back to the control grid, increasing the effect, and bringing the circuit back to normal. It is this sudden rise at the end of the cycle that can be amplified, differentiated, and used to trigger a blocking oscillator for various purposes.

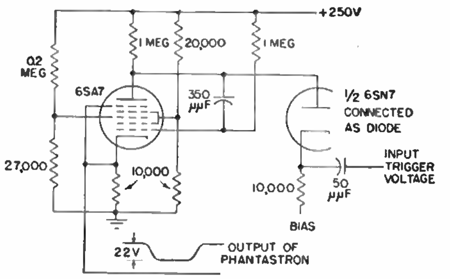

Thus the time interval between the initiating pulse and the end of the cycle is the time for the plate voltage to drop from its steady-state value, as set by the voltage applied to the diode cathode, to the minimum value (about 40 volts). The greater the diode-cathode bias voltage, the greater the delay.

J. V. Holdam, S. McGrath, and A. D. Cole, Radar for Blind Bombing, Part I, *Electronics*, May, 1946, p. 138.

Phototube and Cathode Follower for Measuring Starting Lag of Lamps

COMMERCIAL fluorescent lamp sizes as well as standard germicidal lamps can be measured for starting lag with the circuit shown. First the input voltage is adjusted to suit requirements of the lamp under test. Then the switch is closed, energizing the clock-clutch coil and the lamp ballast. When the test lamp does not light, no current will flow from the 917 phototube through the grid resistor of the 6SC7 cathode follower. Consequently, the cathode follower draws a maximum of plate current, and the 6A3 triode is thus made positive. Low plate-to-cathode resistance of the 6A3 permits operation of the clock clutch.

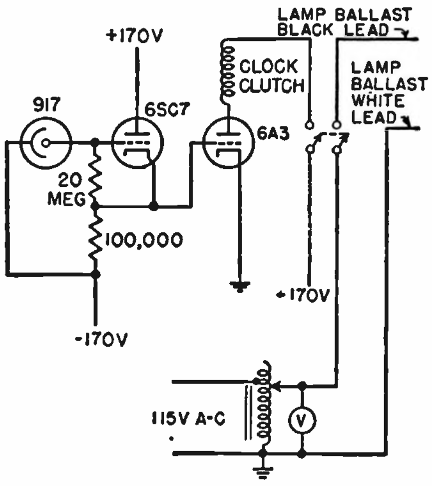

When the test lamp lights, current through the 917 causes the grid of the 6SC7 to become negative, reducing the plate current. Since the 100,000-ohm cathode resistor will then have less voltage drop, the 6SC7 cathode becomes negative with respect to ground. The grid of the 6A3 connected to this cathode will be cut off and the clock clutch will drop.

The operating current of the clock-clutch coil ranges from 40 to 50 milliamperes and is easily handled by the 6A3 tube. Use of the cathode-follower circuit permits the use of high series resistance in the phototube circuit for high sensitivity and convenient cable length between the phototube and the 6A3.

Trevor Temple, Fluorescent Lamp Delay Timer *Electronics*, March, 1947, p. 184.

Thyratron Pulse Generator and Phase Inverter for Calibrating Electronic Timers

USE of a gas tetrode in place of a cold-cathode discharge tube in a transient-pair generator for calibrating electronic microsecond timers is advantageous because the intrinsic lag of the gas tetrode is negligible and the grid-plate interelectrode capacitance is very small. The circuit shown is highly desirable for very short time intervals, since there would otherwise be danger of inducing a nondelayed pulse in the output circuit of pulse 2 by way of capacitive coupling. To make full use of this feature, the delayed pulse must be taken from the plate circuit, and, since this pulse has negative polarity, must be reversed in phase by a subsequent vacuum tube. If it were not for the relatively large grid-cathode capacitance, it could be taken off as a positive pulse on the cathode side without the need of an additional inverter stage.

As with the cold-cathode discharge-tube circuit, the principle of operation is based on the time it takes for a known capacitance C to charge from E_0 to E_2 by application of a known voltage E_1 through a known resistance R. The known voltage E_1 is applied indirectly to the delay network when switch S is operated, the voltage being between a' and b' and capacitively applied over C_L. This does not introduce an error as long as C_L is much greater than C. In this way, the necessary negative bias can be applied to the grid of the tube through RC, which, in order to introduce no error, must merely be large compared with R.

The initial voltage E_0 is not zero, but equal to the permanent negative bias (−45 volts). The voltage sources were

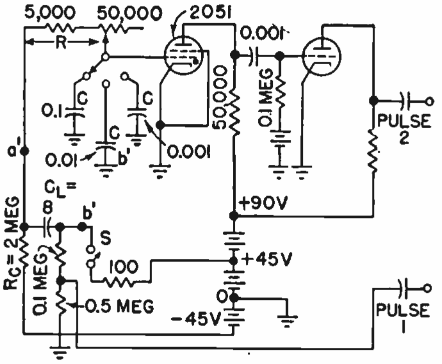

drawn as batteries merely for the sake of simplicity; a-c operation is naturally possible, and can be carried out in the customary ways.

Paul B. Weisz, Electronic Timer for Microsecond Intervals, *Electronics*, April, 1944, p. 108.

Electronic Timing Circuit for Precision Control of Electric Shock Therapy

THE extremely simple electronic timer shown here gives continuously variable shock durations between 0.15 and 0.5 second as required for electric shock therapy, and maintains its timing adjustment within a small percentage for line-voltage changes as great as 20 per cent.

Failure of a component results in total inoperation rather than wrong operation or excessive shock duration. A defective tube will prevent the passage of any shock current. Resistor or capacitor trouble will either prevent the relay from closing or make the shock of very short duration.

In order to guard against the remote possibility of the relay sticking closed through mechanical failure, the switch for administering the shock is of the pushbutton variety and the operator is instructed to hold it in the On position for a period not greatly exceeding that of the selected shock duration.

One side of the pushbutton switch opens the patient circuit, while the opposite side closes the circuit that keeps the relay closed. When the pushbutton is depressed, the patient circuit is closed through both the relay contacts and the pushbutton contacts, but the grid voltage that holds the relay closed is simultaneously removed from the tube except for the charge on the capacitor. When the capacitor charge falls low enough, the relay opens; the shock duration will be the time the relay stays closed after the pushbutton is depressed, and depends upon the setting of variable resistor R_1. The delay can be extended to several seconds if desired by increasing the value of R or C, provided that the capacitor has low leakage and that the tube is not gassy.

The spring bias on the relay affects the timing, and the final timing adjustment must be made for one specific relay adjustment. The relay should have no inherent delay. The timing adjustment is usually made by counting the cycles in the shock inpulse on some kind of oscillograph; the direct-writing oscillographs are of course the simplest to use for this work.

Paul Traugott, Medical Shock Machine, *Electronics*, November, 1943, p. 166.

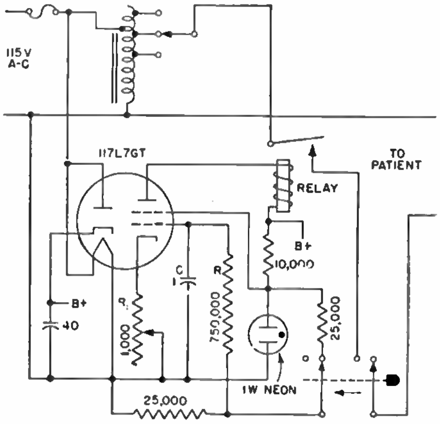

Precedence-indicating Circuit Using Thyratron-actuated Counters

This precedence indicator tells which of two contacts opens first, as is required in certain physiological investigations. The use of thyratrons eliminates simultaneous readings. The 2A4G has an ionization time of about 10 microseconds, and biological variability and human asymmetry being as great as they are, it is seldom that the two hands would be raised within 10 microseconds.

The circuit shows the system used, except for the lighting connections. One of 10 combinations of lights is chosen by a 10-point rotary switch. The lights are turned on by the resetting switch, at the same time that plate voltage is applied to the 2A4G tubes. The weight of the subject's hands holds the telegraph keys closed, providing sufficient negative grid bias so that the thyratrons do not fire.

The operator runs through several light combinations, finally turning on the two left lights, at which signal the subject raises his hands. If the right key has opened first, the removal of the grid bias on the right tube allows it to break down. The plate current operates both the right count and total count indicators, and produces a large voltage drop across the 10,000-ohm resistor in the cathode circuit, which is effectively the same as grid bias on the other tube. Thus, when the other key opens, sufficient grid bias remains to prevent it from breaking down. If the left key has opened first, the same events take place on the left side of the circuit. One hundred effective stimuli are given, as indicated on the total counter, and the percentage of rights and lefts is given on the respective counters.

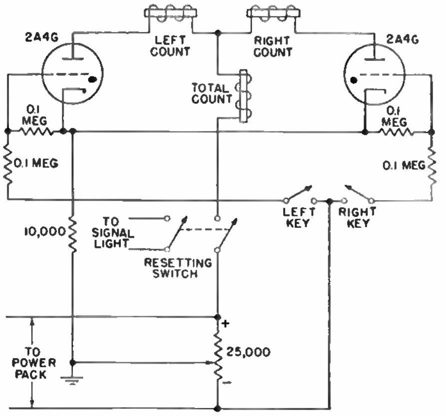

W. E. Gilson, Applications of Electronics to Physiology, *Electronics*, January, 1943, p. 86.

Time Interval and Speed-measuring Circuit Using VTVM to Measure Capacitor Charge

In this circuit for measuring time intervals and speeds of moving objects directly, the instantaneous closing of switches S_1 and S_2, or the interruption of light falling upon phototubes inserted in series with R_3 and R_4, causes the transfer of current from VT_2 to VT_1, and vice versa. The voltage across R_2 produced by the plate current of VT_2 serves as bias for VT_3. Thus plate current starts flowing in VT_3 when S_1 is closed, and stops when S_2 is closed. The resulting change of voltage of C, which is a measure of the elapsed time, is read by means of the voltmeter tube VT_4 and milliammeter *MA*.

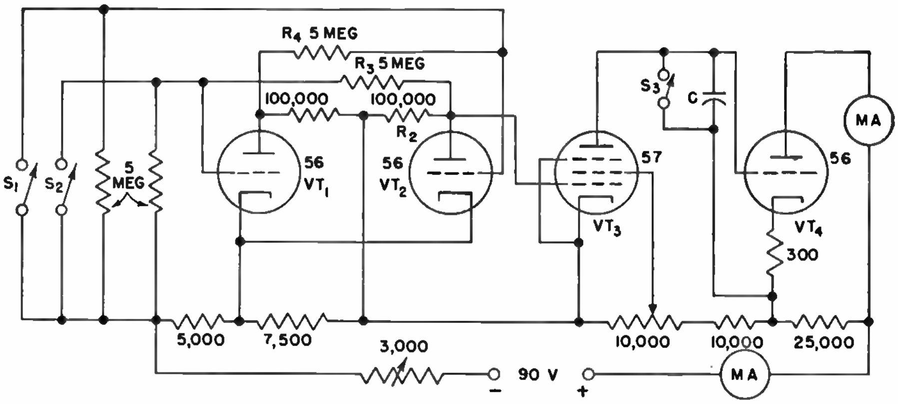

H. J. Reich, Trigger Circuits, *Electronics*, August, 1939, p. 14.

ULTRASONIC CIRCUITS

Capacitor-discharge Driver Circuit for Supersonic Echo Depth Sounder

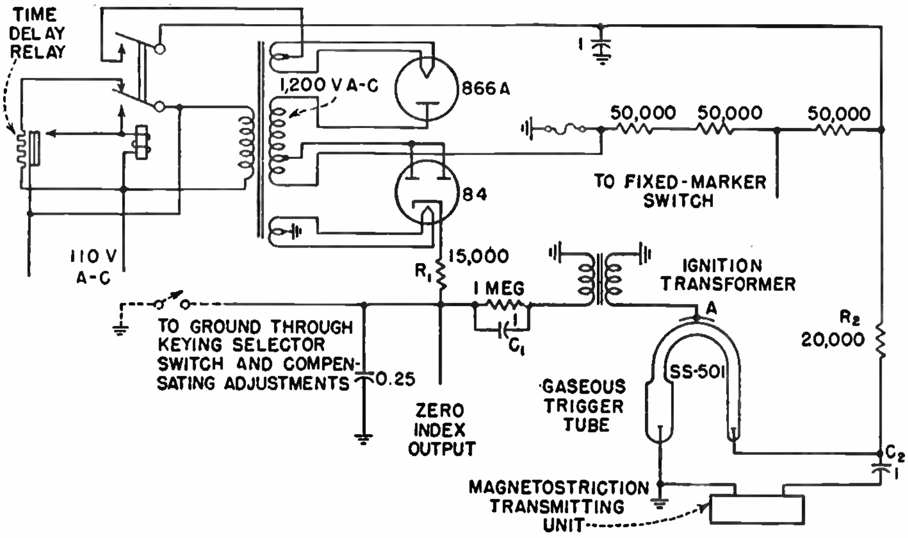

THE driver circuit for shock-exciting the magnetostriction transmitting transducer of an echo depth sounder at a 21.5-kc operating frequency, shown here, uses two diode rectifiers in a somewhat unconventional manner to charge two capacitors, C_1 and C_2. Discharge of C_1 by the motor-driven keying contacts of the depth sounder ionizes the trigger tube, allowing C_2 to discharge through the magnetostriction unit and shock-excite it into vibration at its mechanical resonant frequency of 21.5 kc to produce the desired supersonic signal.

Capacitor C_1 is normally charged to a medium-high potential by a winding of the power transformer, the circuit being completed through the 84 rectifier, the primary of the ignition transformer, and current-limiting resistor R_1. Simultaneously, capacitor C_2 is normally charged to a very high potential (approximately 1,500 volts) by another power-transformer winding through the 866A rectifier, the transmitting transducer, and current-limiting resistor R_2. Closing any set of keying contacts in the recorder unit permits C_1 to discharge through the primary of the ignition transformer without benefit of a current-limiting resistor. The high surge of current through this winding induces a very high potential between external plate *A* of the gaseous trigger tube and ground. As this tube has the potential of C_2 across its terminals, it is instantly ionized, allowing C_2 to discharge through the coils of the transducer without benefit of a series current-limiting resistor. This pulse of current, with an instantaneous maximum value approaching 200 amperes, causes the magnetostriction elements to vibrate at their mechanical resonant frequency of 21.5 kc and thus produce an acoustical signal in the water having usable power.

Opening of the keying contacts allows the two capacitors to recharge at low rates in preparation for the next cycle of the same operation. The special U-shaped argon-filled trigger tube serves essentially as a relay between the keying contacts and the transducer, providing the necessary control of the large current required to excite the transducer.

G. B. Shaw, Echo Depth Sounder for Shallow Water, *Electronics*, September, 1946, p. 88.

Circuit for Producing Sounds from Ultrasonic Frequencies

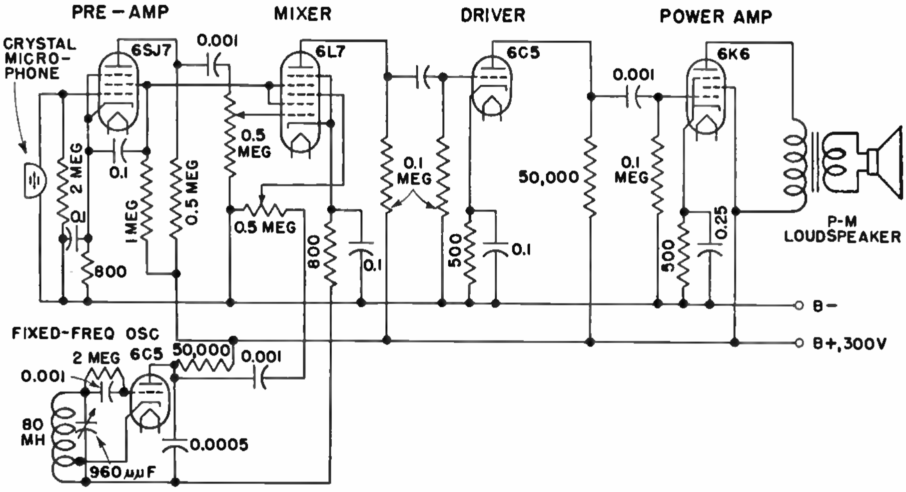

THIS circuit consists of an audio heterodyne amplifier used to pick up inaudible sounds, amplify them, and produce a note of proportional loudness in the audible range. It is useful in the manufacture and distribution of coin-operated beverage-vending machines, for the measurement of ultrasonic frequencies given off by the various coins when set into vibration, as a means of slug detection. A similar circuit arrangement is used in sonar underwater sounding equipment.

When the frequency of vibration extends above the audible range, an instrument for making these sounds audible is required. This instrument consists of an amplifier which contains a local oscillator that beats with the incoming sound frequency to produce a difference frequency in the audio range. This is similar to the superheterodyne principle used in communications.

Boley, A. Andrews, Supersonic Inspection Methods, *Electronics*, May, 1944, p. 122.

Amplifier-limiter-discriminator Circuit for Ultrasonic Door-opening System

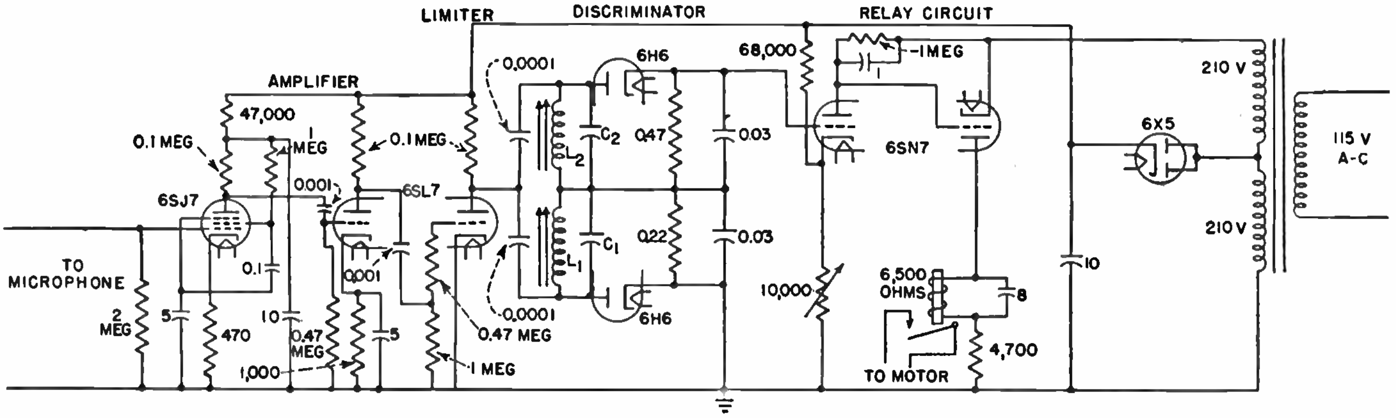

This five-tube amplifier with limiter and discriminator will, when connected to a crystal microphone positioned above a garage door, pick up the 25,000-cycle ultrasonic wave produced by a vacuum-tube ultrasonic whistle on an approaching automobile and cause operation of a relay in the circuit of the door-opening motor.

The amplified and limited signal is fed into a discriminator circuit which selects the desired signal frequency, rectifies it, and places a negative d-c bias on the grid of the first triode section of the following relay circuit, so that the second triode section operates the relay whose contacts control the door-opening mechanism. The discriminator also protects the control system from operation by unwanted ultrasonic sources.

A voltage amplifier is followed by a triode that serves as a limiter. Limiter action takes place with input voltages of 7 mv and over. The limiter is necessary because it is desirable to introduce into the discriminator tube circuit a constant voltage regardless of signal intensity variations.

A second tuned coil, generally tuned to a higher frequency than the desired signal, is inserted in the discriminator circuit. Any signals received in this circuit are rectified and delivered as positive voltages to the relay circuit. If an undesired ultrasonic signal is received at the discriminator circuit, which contains a multitude of frequencies, the resultant d-c output will be zero or predominantly positive, depending on the frequency distribution, and the relay will not operate. The relay tube circuit is thus operative only when a negative voltage of proper amplitude is applied to the grid.

The d-c voltage obtained from the discriminator circuit is applied to the grid of a two-stage double-triode relay control tube. Contained within this circuit is a time-delay network that closes the relay contacts after approximately 3 seconds of steady signal reception. This time delay is necessary to prevent door operation by transient ultrasonic waves and sudden line-voltage surges.

The relay used in the control has a low armature release point, being generally 50 per cent of the pull-in value. This is required because in field installations a large drop in line voltage occurs when the motor operating the doors is running on the starter winding. This drop in some cases reduces the line voltage from 120 volts to as low as 80 volts for a short instant.

Boley A. Andrews, Ultrasonic Garage-door Opener, *Electronics*, March, 1947, p. 116.

Automatic-frequency Control Circuit for Ultrasonic Generator

An electronic circuit for driving mechanically resonant vibrating sound generators, maintaining frequency very close to the resonant frequency of the vibrator, is shown in the accompanying diagram.

The generator is used to flocculate and remove suspended particles in smoke, fumes, and fog, and contains a duralumin bar that is free to vibrate at its resonant frequency. An extruding ring acts as a one-turn coil which, when supplied with induced alternating current, drives the bar in much the same manner that a voice-coil assembly drives the diaphragm in a dynamic loudspeaker.

A metal plate is mounted near the bar to form an electrostatic pickup whose capacitance varies with the motion of the vibrating bar. This capacitance change produces an alternating voltage which is amplified and fed back to the ring which energizes the bar. In the amplifier the alternating voltage is fed to a discriminator and reactor tube circuit similar to that used for automatic-frequency control of pushbutton receivers. Change in phase of the vibrator motion relative to the driving force produces a direct voltage that is applied to a tube employed as a variable reactance to correct the frequency of a vacuum-tube oscillator. Changes in either the oscillator frequency or the vibrator frequency, or both, of approximately 500 cps in 12 kc are followed automatically so that the oscillator frequency does not deviate from the resonant frequency of the vibrating member by more than 0.1 cps.

Under heavy acoustial load conditions the motion of the vibrating bar may be so small that the amplifier gain may not be sufficient to maintain oscillations and the system ceases to function. Too, the vibrations are initiated at low amplitude and gradually build up to a maximum, so that in borderline cases where the gain in the system is barely sufficient to maintain oscillations it may be difficult to get it started.

With the afc system the power from the oscillator is always available for driving the vibrating bar and, in most cases, the pickup capacitance changes are sufficient to provide automatic control over the oscillator frequency. With heavy acoustical loading the vibrating bar can still be driven and supply acoustical

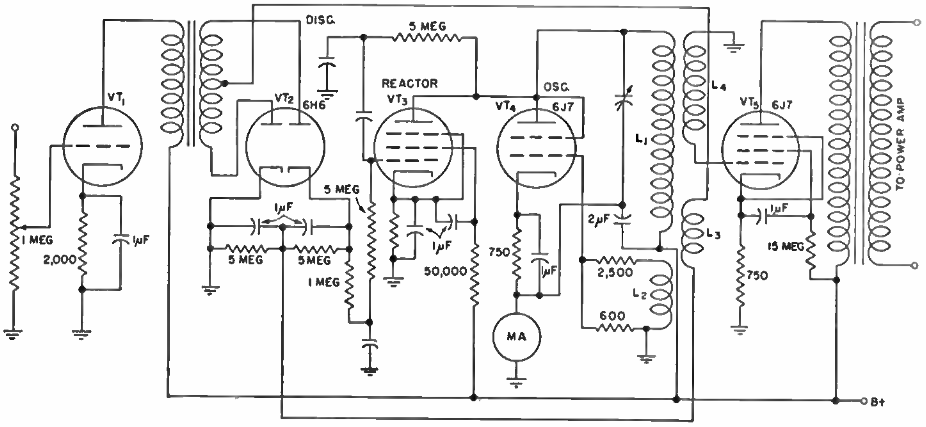

power. In addition, the power available for driving the vibrator has an initial value equal to the maximum output of the power amplifier, and the vibrator motion will build up to maximum in the least possible time.

These conditions are provided by the oscillator control circuit shown in the diagram. It consists of oscillator VT_4, voltage amplifiers VT_1 and VT_5, discriminator tube VT_2, and reactor tube VT_3. The oscillator consists of tube VT_4 and coils L_1 and L_2, connected in a conventional tuned-plate oscillator whose amplitude of output is controlled by the resistors connected to coil L_2. Amplifier tube VT_5 isolates the oscillator from its load and, for this purpose, coupling coil L_4 is electrostatically shielded from L_1 and L_2. Tube VT_3 is the reactor tube that, along with coil L_1 and the tuning capacitor, determines the frequency of the oscillator. The control grid of this tube receives its bias from the direct voltage produced across the diode load resistors in the discriminator circuit. Tube VT_1 amplifies the input voltage developed by a preceding amplifier.

The preamplifier converts the capacitance changes of the pickup into a voltage that, when amplified, furnishes the voltage for the discriminator. The actual motion of the vibrator bar and the resulting capacitance changes in the pickup depend upon the acoustical load on the vibrating bar and vary considerably. The amplifier must supply a constant output voltage to the discriminator, even though the voltage from the capacitance pickup varies from 5 to 200 millivolts. This is accomplished by incorporating an automatic-gain-control circuit in the preamplifier. A phase-shifting network is also included, so that the phase of the output voltage can be changed relative to the input voltage by substantially 360 degrees to have the proper phase relation in the discriminator circuit.

It was found that the reactor tube operated more effectively when the peak oscillator voltage was less than the direct voltage on the reactor tube plate. Using a pentode 6J7 tube, peak alternating voltage could equal the plate potential, but with tetrodes the peak voltage could not exceed half the plate voltage. A 6J7 was used because the output voltage could be readily controlled by the resistors connected to coil L_2. These were adjusted so that the peak voltage from the oscillator was about 0.9 of the direct plate potential applied to the reactor tube.

Automatic Frequency Control for Mechanical Vibrators, *Electronics*, November, 1943, p. 194; E. V. Potter, *Rev. Sci. Instruments*, July, 1943; H. W. St. Clair, *Rev. Sci. Instruments*, May, 1941, p. 12, *Electronics*, September, 1941, p. 79.

Two-tube Ultrasonic Oscillator and Amplifier for Driving Magnetostriction Transducer

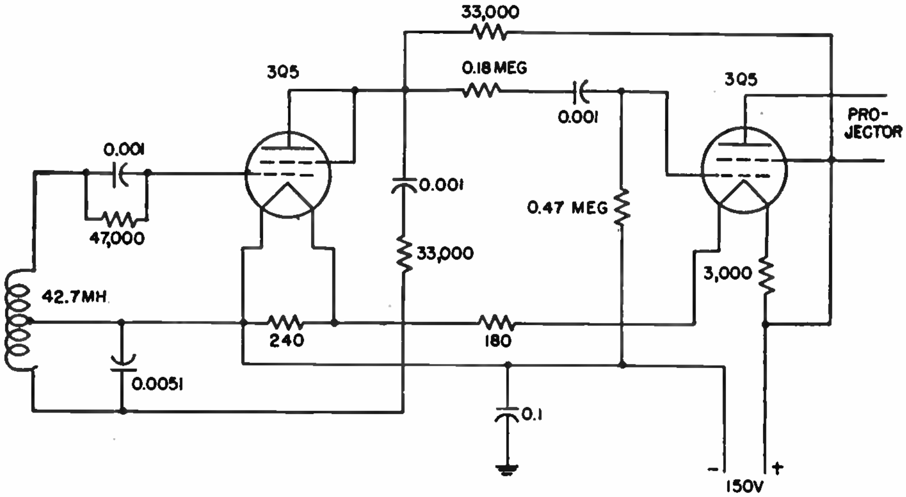

Two 3Q5GT tubes, one operating as a frequency-stabilized 24.5-kc oscillator and the other as the output amplifier stage, serve here to drive a magnetostriction transducer that can be used to transmit an almost nondirectional sound beam of moderate intensity into surrounding water or other liquid. The circuit was originally developed as a beeper to be installed in torpedoes for locating those lost during test runs.

Both filament and plate currents are supplied from storage batteries of an electric torpedo (or from conventional radio batteries). With a supply voltage of 150 volts, an acoustic signal in excess of 0.5 watt is transmitted to the water. A coil of several hundred turns surrounding a magnetostrictive nickel tube mounted on a small metal diaphragm serves as the transducer. A small permanent-magnet rod is placed inside and along the axis of the tube to provide magnetic polarization. Alternating current from the oscillator amplifier flows through the coil and produces the driving force to set the magnetostrictive tube into oscillation.

With a 10-volt signal at the resonant frequency impressed upon the coil of the transducer, the acoustic field at a distance of 1 meter in the direction of maximum intensity is from 30 to 35 db above 1 dyne per sq cm.

If an inverse square law of diminution of the field with distances is assumed and −20 db versus 1 dyne per sq cm is taken as a threshold signal strength, a maximum operating range is set at about 1,100 yards.

Eric A. Walker and Paul M. Kendig, Acoustic Locating System, *Electronics*, February, 1947, p. 124.

Ultrasonic Generator for Underwater Sounding

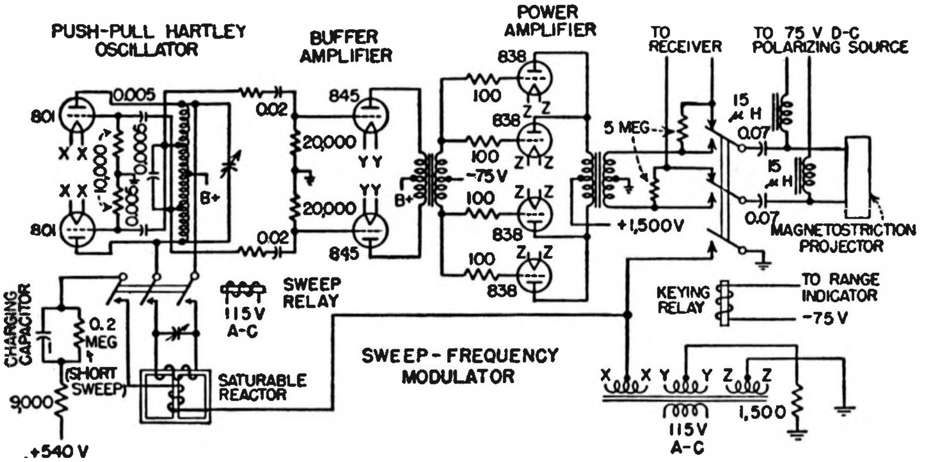

USED in model QCS/T sonar equipment, this circuit delivers a 600-watt pulse to an underwater magnetostriction projector at some frequency in the ultrasonic range from 17 to 26 kc.

The driver circuit consists of a self-excited oscillator that generates a 24-kc supersonic frequency, a two-stage amplifier that builds up the oscillator output to a maximum power of 600 watts, and a keying relay that clicks out the 0.1 to 0.2-second duration pulses at intervals of several seconds.

As shown, the driver employs a push-pull Hartley oscillator whose frequency is variable from 17 to 26 kc, a push-pull buffer amplifier, and a class C operated push-pull-parallel power amplifier to excite the projector. Keying of the driver is accomplished by completing the cathode circuit of the oscillator (by grounding the center tap of the filament winding for the oscillator tubes) and by connecting the projector to the power-amplifier stage of the driver through contacts of the keying relay during keying. A small portion of the driver output is applied to the receiver through 5-megohm resistors to provide a visual indication of keying on the range indicator. Power for the driver comes from a three-phase full-wave rectifier employing mercury-vapor rectifiers.

If the frequency of the oscillator in the driver is varied over a band of frequencies during keying (during transmission of a pulse), the reverberations arriving at the projector simultaneously from different distances will be of different frequencies and will not reinforce each other. Sweep-frequency modulation of the oscillator thus reduces reverberations to a low level, while echoes from a target are heard as a clear chirp of varying frequency. This modulation is generally used during search, but after a target has been picked up the sweep is usually disconnected to permit utilization of the Doppler effect for tracking an evasive moving target.

The transmitted pulse begins at 800 cycles above the frequency to which the oscillator is tuned and sweeps down to 800 cycles below the oscillator frequency. This is achieved by shunting across the oscillator tank circuit a saturable reactor whose inductance is made to vary by charging a capacitor through a coil on the center leg each time the keying relay is closed. An adjustable capacitor across the primary winding of the reactor permits adjusting the sweep-frequency range with relation to the natural frequency of the oscillator.

The values shown give a 0.1-second sweep. Provision is made in the equipment for inserting a larger charging capacitor to give a 0.2-second sweep for use with the longer keying pulses employed when using echo ranging at longer range. A resistor in shunt with the charging capacitor provides a discharge path between keying and prevents the current through the d-c winding from decreasing to zero when the capacitor becomes fully charged.

Richard J. Evans, Echo Ranging Sonar, *Electronics*, August, 1946, p. 88.

Three-stage Supersonic Amplifier for Echo Depth Recorder

THIS supersonic echo amplifier circuit for an echo depth sounder is a conventional three-stage single-channel unit with self-contained power supply, delivering 180-volt pulses capable of disintegrating black-bodied carbonized dry recording paper to make the desired record. The pulse voltage is applied to opposite sides of the moving chart paper by stylus and platen electrodes.

The first two stages are semifixed-tuned impedance-coupled stages at the signal frequency of 21.5 kc, and are resistance-coupled to the third. The gain, or sensitivity, control varies the gain of the first stage by adjusting the control-grid-bias voltage thereof, and it is essentially linear and continuous to 100 per cent gain. The input impedance is approximately 15 ohms; the output impedance to the stylus is of the order of 100,000 ohms when no signal is being recorded and drops to a few ohms under marking conditions. A chart density control is provided as shown to permit optimum density of marking under all conditions and to prevent excessive burning under strong-signal conditions.

The first stage (6AC7) is operated as a class A pentode amplifier with medium-negative bias voltage; the second stage (6SH7) is essentially a zero-bias amplifier, there being no fixed grid-bias voltage. The operating bias voltage is obtained from the preceding stage output signal, applied across the grid resistor and affording some limiting action. The third stage (6Y6G) is a power-type pentode operating at a point as close to cutoff at the cathode-resistor method of obtaining bias voltage will permit. On positive peaks of amplified signal voltage from the preceding 6SH7, large pulses of d-c plate current are caused to flow in the 6Y6G. Such rapid changes in magnetic flux lines in the output transformer produce the relatively high voltage (180 volts) necessary to produce disintegration of the paper coating beneath the stylus.

At the operating frequency of 21.5 kc an input voltage of 2 microvolts is necessary to mark the paper when the amplifier gain is set at 100 per cent. Under those conditions the bandwidth is

2 kc at the usual 3 db down reference point. The amplifier is designed to match the *Q* of the transducer, which is approximately 10. Higher degrees of sensitivity and selectivity are normally not required in depth sounding.

Contrary to general belief, feedback and regeneration conditions can occur at supersonic frequencies unless the usual rules of design are adhered to.

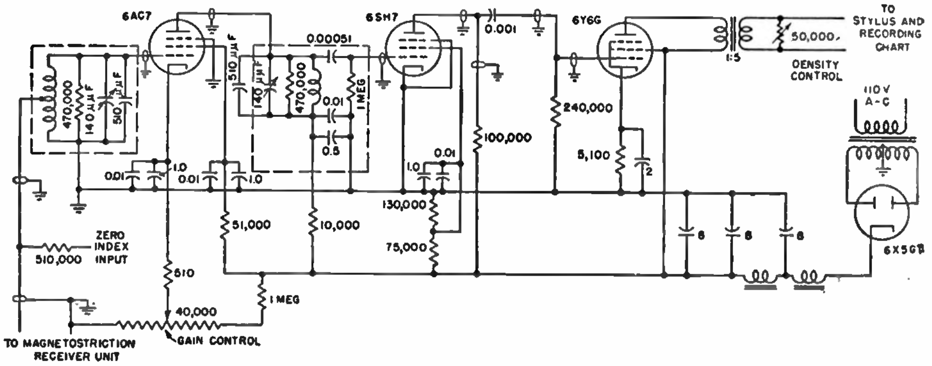

G. B. Shaw, Echo Depth Sounder for Shallow Water, *Electronics*, September, 1946, p. 88.

Five-hundred-watt Ultrasonic Generator Circuit

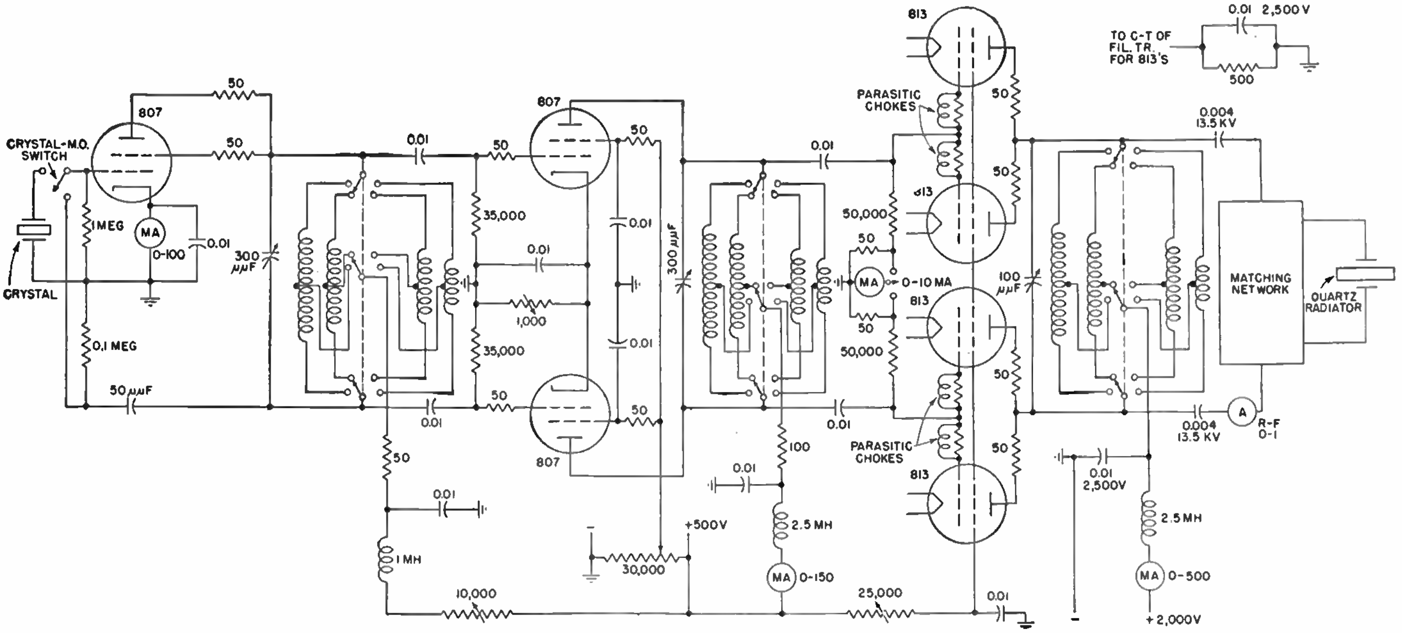

THE requirements of the r-f generator used to excite a quartz crystal for generating ultrasonic waves are similar to those of the usual radio transmitter, except that provisions for the use of both a crystal-controlled and a stabilized, calibrated variable-frequency exciter should be included. Operating frequencies may cover a wider range than usual but continuous frequency coverage is not absolutely essential. Additional refinements might also include a variable power output control and an automatic timing device to facilitate accurate ultrasonic time exposures.

The circuit of a generator designed and constructed to excite a quartz radiator is shown. It employs beam-power tetrodes to eliminate neutralization, and the final amplifier consists of type 813 tubes operating in push-pull parallel. The generator has an operating range of from 150 to 1,000 kc, obtained by switching plate-circuit inductors. When fully loaded, it will deliver over 500 watts output. In operation, all metallic objects associated with the equipment are grounded to prevent accidental burning of the operator by induced potentials.

Frederick W. Smith, Jr., and Paul K. Stumpf, Ultrasonic Generator, *Electronics*, April, 1946, p. 116.

Heterodyne Ultrasonic Receiver Circuit for Picking Up 24.5-kilocycle Underwater Signals

WHEN used with a directional magnetostriction hydrophone, this ultrasonic receiver circuit can be used to locate the source of an underwater ultrasonic signal, much as a radio direction finder is used to locate a radio station.

The first stage is an untuned vlf amplifier that is followed by a tuned vlf amplifier and a converter. The local oscillator injects a signal to the converter, which, when mixed with the incoming vlf signal, produces an audible beat-frequency output. Tuning of the local oscillator and vlf tuned circuits is ganged to produce proper tracking between the two frequencies over the tuning range of 21 to 51 kc. The difference in frequency between the local oscillator and input signal is 1,500 cycles, and the audio resonant filter is adjusted to that frequency. If necessary, the audio filter

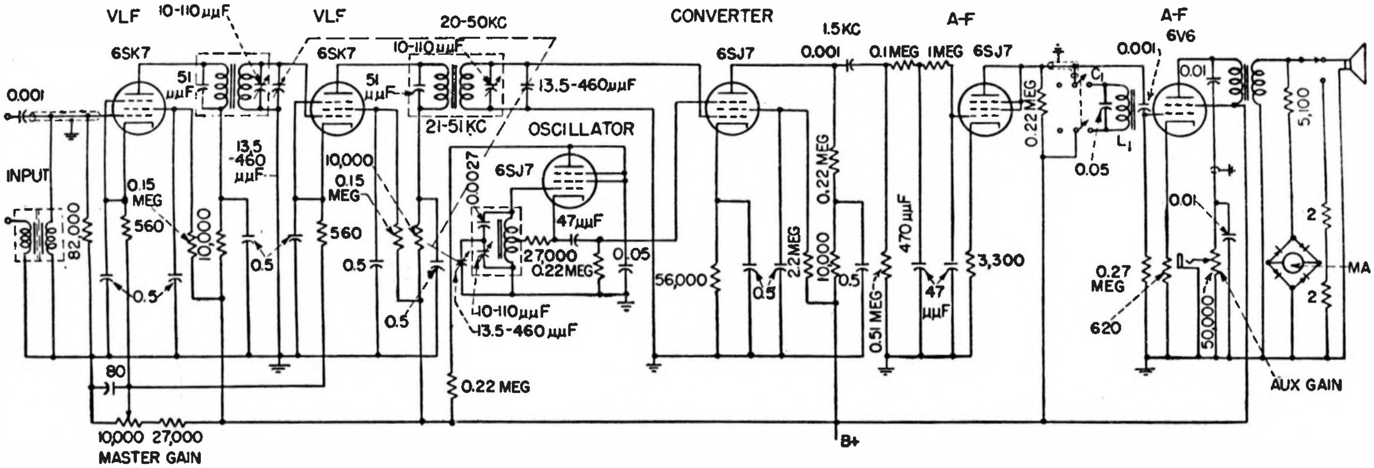

consisting of C_1 and L_1 may be switched into the circuit to improve signal-to-noise ratio. The 6V6 output stage provides appreciable audio power which may be applied to the loudspeaker or which may be picked up on headphones.

A level indicator is bridged across the output system, and use of this meter enhances the accuracy of bearing determinations.

A master gain control varies the gain of the first r-f stage, while auxiliary gain control in the a-f system permits the user of headphones to select his own desired operating level independent of the level of loudspeaker operation.

Eric A. Walker and Paul M. Kendig, Acoustic Locating System, *Electronics*, February, 1947, p. 124.

VOLTAGE-REGULATOR CIRCUITS

Electronic Voltage Regulator Using Triode and Pentode

A TYPE 2A3 triode serves as an automatically adjusted variable series resistor in the positive leg of this full-wave rectifier circuit, designed to deliver 180 volts of regulated output for precision electronic instrumentation, such as the kind required for the galvanometer amplifier of a seismometer. A type 6J7 sharp-cutoff pentode adjusts the bias on the 2A3 in response to filter output-voltage variations, and a 1-watt neon lamp provides fixed bias for the pentode. For additional protection against line-voltage variations, an automatic voltage regulator can be employed between the power line and the power-transformer primary winding.

Earthquake Recorder, *Electronic Industries*, October, 1944, p. 98.

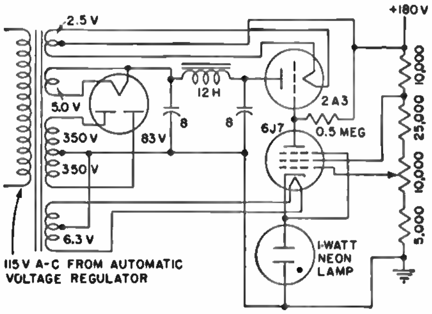

Alternating-current Voltage-regulator Circuit That Improves Wave Form

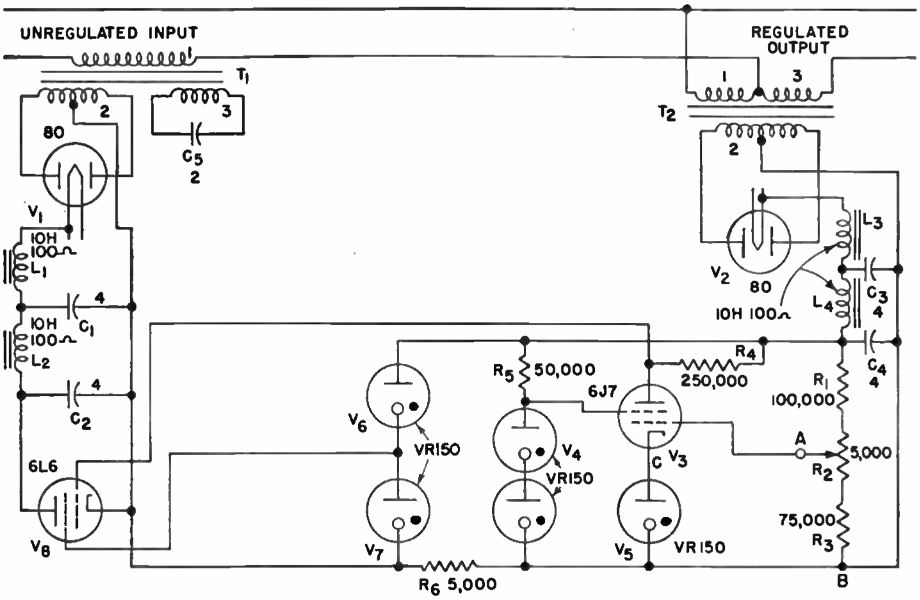

THIS regulator circuit automatically stabilizes the output voltage by adjusting the voltage drop across series transformer T_1 to compensate for any change of input voltage. For example, if the input voltage should increase by 1 volt, the circuit automatically makes adjustments that increase the voltage drop across the primary side of transformer T_1 nearly to neutralize the increase of input voltage.

A fractional part of any voltage change that appears at the input terminals will appear across the output terminals. This change is detected and amplified by the rectifier-filter unit and the voltage-change detector, and an amplified voltage change, or correction voltage, is applied to the grid of a vacuum tube that acts as a load on the secondary side of T_1. A change of grid voltage on this tube changes its power consumption, thereby changing the voltage drop across both primary and secondary sides of T_1. The resultant voltage change across the primary side of T_1 nearly neutralizes the original voltage change at the input terminals.

The voltage rectified by V_2 is supplied through transformer T_2 from a part of the regulated output voltage. After filtering, this rectified voltage appears across the series combination of R_1, R_2, and R_3. A portion of this rectified and filtered voltage is compared with a constant voltage across regulator tube V_5. The difference between voltage drops A-B and B-C is the grid-cathode voltage on voltage-change detector V_3. By this method a voltage change appearing at the regulated output produces a corresponding voltage change at the grid of V_3. This voltage change is amplified and applied to the grid of V_8, the loading tube. A change in the grid voltage of V_8 produces a change in the impedance of the primary of T_1, changing the voltage drop across it enough to neutralize most of the change in input voltage.

If the voltage drop across the primary of T_1 is to approximate a sinusoid, special consideration must be given to the values of circuit elements L_1, L_2, C_1, C_2, and C_3. The network involving these impedance elements and rectifier tube V_1 is used to convert the d-c resistance of V_8 into a nearly linear a-c impedance appearing across the primary of T_1.

The values of the circuit elements were determined experimentally, a cathode-ray oscilloscope being used to observe wave form. For closer adjustments, the harmonic content of the regulated output voltage can be measured with a wave analyzer. Transformers T_1 and T_2 are conventional radio power-supply transformers. Winding 3 of T_1 is the 115-volt primary winding; winding 2 is the 1,000-volt center-tapped secondary; winding 1 consists of two 5-volt windings connected in series. Winding 1 of T_2 is a 115-volt winding; winding 2 is a 800-volt center-tapped winding; winding 3 is a 6.3-volt winding. Winding 1 and 3 of T_2 are connected as an autotransformer to boost the voltage so that the output voltage has nearly the same value as the average of the input voltage.

The regulator suppresses the third harmonic found in the input and leaves the other harmonics essentially unchanged, so that the output wave form is actually slightly better than that of the input.

L. Dale Harris, Electronic A-C Voltage Regulator, *Electronics*, January, 1946, p. 150.

Simplest Degenerative Voltage Regulator for Power Supplies

THIS degenerative voltage regulator compensates for changes in output voltage resulting from changes of line voltage and varying load current. An increase of output voltage E_o, as a result of decreasing load current or increasing input voltage, increases the current through R, resulting in a higher bias voltage on T_1 and a corresponding decrease of plate current. This action tends to return the output voltage E_o to its original value. For best regulation, tubes with a high amplification factor are recommended; but this requirement limits the plate current of T_1, since tubes with high amplification factors in general pass low plate current. Where a simple method of manual voltage control is required with not too rigid regulation, 2A3, 6B4, or 6L6 tubes may be employed.

Resistance R may be replaced by an amplifier having a high μ so that in addition to manual voltage control a high degree of regulation may be had.

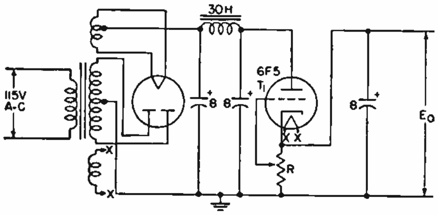

G. E. Hamilton and T. Maiman, Voltage-regulated Power Supplies, *Communications*, November, 1945, p. 44.

Single Thyratron and Lamp Bridge as Electronic Regulator for A-C Generator

THIS simple single-tube electronic voltage regulator for small- and medium-size a-c generators has the advantages of simplicity and rapid response as well as of stability, and it may be assembled entirely from standard parts. It will work for any single-phase, two-phase, or three-phase alternator requiring d-c excitation for its field. The thyratron handles only that fraction of the exciter field current that is required for effective control of the output voltage of the a-c generator.

An FG57 grid-controlled mercury-vapor rectifier tube (thyratron) with a negative grid-control characteristic secures power from a transformer whose primary is connected directly to the output of the a-c generator.

The bridge circuit consists of two 115-volt 75-watt Mazda lamps (R_1 and R_2) and two 115-volt 120-watt carbon-filament lamps (R_3 and R_4). Secondary No. 2 supplies this bridge circuit with a voltage of approximately 120 volts. An adjustable resistor R is provided in this circuit so that the applied voltage may be adjusted within limits. The output of this bridge circuit is applied to the grid-cathode path of the thyratron through 2-μf paper capacitor C_1. Secondary No. 3 supplies plate voltage for the tube. The output of the tube is fed to the exciter field through relay contacts S_2.

Relay contacts S_1 are used to change the exciter field rheostat from position 2 to position 1. The relay itself is operated by a motor-driven time-delay mechanism that allows the thyratron approximately 5 minutes to warm up before it is called on to function as a regulator.

The circuit $C_2R_5R_6$ serves to prevent the tube and machine from surging, or hunting, while in operation. By proper proportioning of these three values the action is smooth and rapid. C_2 is usually 4 to 5 μf, while R_5 and R_6 are 5,000 to 8,000 ohms each. R_6 must be adjusted to the time constant of the exciter and alternator fields. Reducing the resistance of R_6 reduces the sensitivity of the regulator; hence this resistor should be set at the highest value that will give stable operation.

When the a-c generator and exciter are started up by their prime mover, the regulator is not operative immediately. Contacts S_2 are open, and contacts S_1 are in position 2. Control of voltage is accomplished manually by means of the exciter field rheostat. The voltage is adjusted to the desired value by hand as load is applied during the first 5 minutes. A motor-driven time-delay switch starts up immediately. After the 5-minute delay, during which time the filament is heated, the delay switch energizes the relay. Contacts S_2 then complete the plate circuit of the thyratron and contacts S_1 change from rheostat position 1 to position 2. The S_1 contacts are so designed that the circuit is made at position 1 before it is broken at position 2.

The regulator is now in operation and has full control of the voltage. When the machine is shut down, the time-delay relay automatically resets itself, opening S_2 and throwing S_1 from position 1 to position 2.

The reason for using S_1 to change the rheostat from position 2 to position 1 when the tube is placed in operation is as follows: The exciter rheostat is initially adjusted to maintain the proper alternating voltage with the thyratron inoperative and S_1 in position 2. When S_2 is closed, the tube is inoperative at the load for which the exciter rheostat was set during the warm-up period. If some load were dropped from the alternator, the voltage would rise above normal. Additional resistance is introduced by S_1 so that even at no load the voltage will not be too high when the electronic regulator is operating. Best results are usually obtained by a resistance between positions 1 and 2 of at least twice the exciter field resistance, with the optimum value depending on the constants of the machine.

The control of the voltage is accomplished as follows: If the voltage drops below a value determined by the setting of rheostat R in the circuit of secondary No. 2, bridge $R_1R_2R_3R_4$ unbalances in such a direction as to make the grid of the thyratron less negative. The thyratron then becomes operative, rectifying the a-c supply from secondary No. 3 and feeding this rectified pulsating direct current through the exciter field in the same direction as the regular field current flows. The net excitation of the field thereby increases, causing the voltage of the exciter to rise. The current in the alternator field therefore increases, and the alternating output voltage rises.

The rising alternating voltage acts through the transformer to make the grid more negative, stopping conduction of the tube. This in turn allows the voltage of the exciter, and thus of the alternator, to decrease until the tube again becomes operative.

To prevent the circuit from surging, or hunting, R_5, R_6, and C_2 are connected across the exciter output. When the exciter voltage rises, a charging current flows through this circuit. The momentary voltage drop across R is in such a direction as to bias the grid of the tube negatively with respect to the cathode, which tends to make the tube inoperative. This action prevents the system from setting up sustained oscillations, called hunting, or surging. Resistance R_6 also acts as a grid leak from the grid to the cathode.

By properly proportioning the values of R_5, R_6, and C_2 the action can be made so smooth and rapid that no change is detected in the alternating voltage when the load is constant. The recovery of the voltage when full load is suddenly applied to the a-c machine is quicker than with other conventional regulators, since it does not depend entirely on the time constants of the alternator and exciter fields. When more voltage is required, the exciter field is energized almost instantly by the output of the tube.

The excitation is aided by the tube when the load comes on, thus raising the voltage more rapidly. Also, the tube is only fully conducting during short periods of very heavy loads. Under normal loads it rectifies only a small portion of the time, which results in increased tube life. Some of the required current for the exciter field comes normally from the exciter armature itself, and hence the tube can be much smaller than if it supplied all the field current. No special field winding is required; any standard exciter will work with this arrangement.

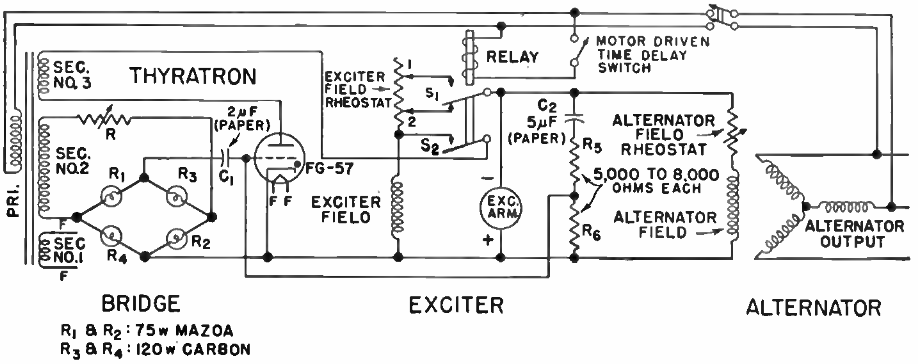

Arnold Benson, Electronic Regulators for A-C Generators, *Electronics*, April, 1943, p. 104.

Five-ampere Electronic D-C Regulator Circuit

For photoelectric and similar applications where a high constant value of direct current is required for maintaining constant light output of a 1 ampere, this circuit will hold lamp voltage constant better than 0.1 per cent, even though the voltage drop across the lamp is only 20 volts.

In this type of regulator the 2A3 tubes act as a variable resistor in series with the load. For this application the ten 2A3 tubes were shunted with a wire-wound variable resistor to help them carry the load, the tubes carrying ½ ampere and the resistor the remainder. When the circuit is operating, the grid of the first control tube (a 6c6) measures the change in lamp voltage; this change is amplified and applied to the grids of the 2A3 tubes to change the current and bring the voltage across the lamp back to its original value.

The load being fixed, the regulator has to compensate only for changes in line voltage. It will make a 10-volt swing in line voltage appear to the lamp as a change of less than 0.01 volt, or 0.05 per cent.

To be satisfactory the regulator must not only compensate for line-voltage swings but also must drift very little during the time of operation. This requirement is more severe than it is in most regulators of the same type because of the small changes of voltage that must be detected. However, due to the feedback in the circuit most of the components are not critical. For example, the circuit is so insensitive to the tube constants that one of the 2A3 tubes may be removed from its socket while the regulator is operating without producing a measurable change in the output voltage.

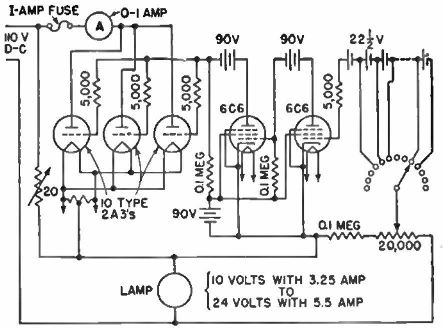

J. N. Coombs and P. T. Nims, A 5-ampere Electronic D-C Regulator, *Electronics*, January, 1940, p. 40.

Combination Voltage Regulator and Electronic Exciter for A-C Generators

Here is an all-electronic voltage regulator that also serves as the exciter for small engine-driven a-c generators, giving high speed of response to load changes. The regulator feeds directly into the field of a 5-kva three-phase 220-volt 1,800-rpm alternator.

The primary of the transformer is designed for the rated output voltage of the alternator. Secondary No. 1 of this transformer supplies the proper voltage for heating the filaments of the three tubes, namely, 15 amperes at 2.5 volts. Secondary No. 2 is wound for 120 volts and supplies the bridge control circuit $R_1R_2R_3R_4$. R_1 and R_2 are two 75-watt 115-volt Mazda lamps, and R_3 and R_4 are two 120-watt 115-volt carbon-filament lamps. This bridge balances at about 109 volts, but operates in the neighborhood of 112 volts with negative grid-control tubes, so that the output from it to the 2-μf paper grid capacitor and grid is sufficient to control the tube. In order to be able to adjust the voltage of the a-c generator between limits, a variable resistance R rated at about 25 ohms and 25 watts is used.

Secondary No. 3 is 500 volts center-tapped. The grid-control tube is an FG17 thyratron. The two type 866 rectifier tubes employ 50-ohm 10-watt resistors to divide the load between them.

In order to allow the machine to build up in voltage when started, a rotary reversing switch mounted on the shaft of the alternator is used in conjunction with a 6-volt battery and secondary No. 4. The secondary is 14 turns of No. 12 wire, center-tapped.

The reversing switch is made up of two slip rings with alternate interleaved segments forming an elementary commutator 1½ inches in diameter and 2 inches long. The brushes are normally held off the commutator by a spring mechanism, and are lowered in contact with the commutator only when solenoid *A* is energized by the ignition switch of the engine upon starting.

Three relays are used, labeled *B*, *C*, and *D*. Relay *B* prevents the plate voltage from being applied to the tubes until the heater has caused the bimetallic strip to energize the operating coil of relay *B* from the 6-volt battery, thus giving a heating time of 20 seconds for the tube filaments. Relay *C* is energized from the 6-volt battery when the ignition switch is closed. Relay *D* opens its contact when its coil is at about 25 per cent of rated voltage. This allows relay *C* to deenergize and open its top contacts, closing its bottom contacts.

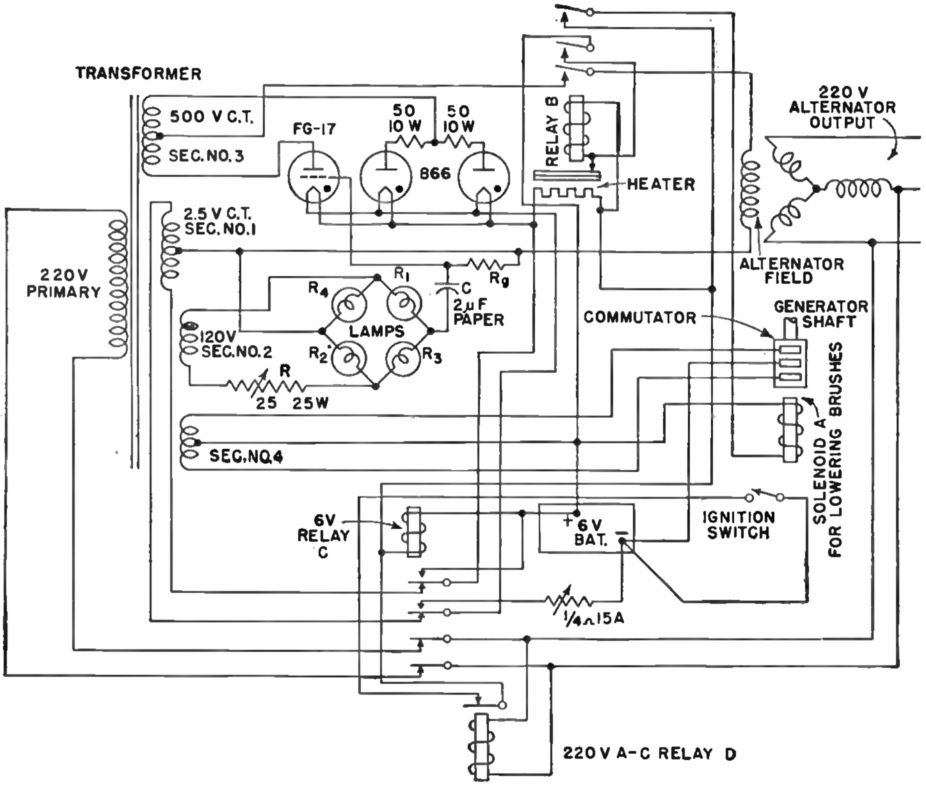

To start the machine, the ignition switch is closed and the filament voltage adjusted to 2.5 volts by means of the series rheostat. The engine is then started. When the thermal delay closes after the 20-second interval required to heat the filaments, solenoid *A* is energized, lowering the brushes on the commutator. Secondary No. 4 is then energized first on one half and then the other by the commutator-type reversing switch. This causes the generator to build up in voltage.

When about 25 per cent voltage is reached, relay *D* picks up and releases relay *C*, whose top contacts open and bottom contacts close. This energizes the transformer primary from the generator, and it also deenergizes solenoid *A* and raises the brushes on the rotary switch. The filaments are also transferred from the battery to secondary No. 1. All this is accomplished in a little less than 2 seconds after the thermal delay on relay *B* trips. The generator immediately builds up in voltage to the value for which rheostat *R* is adjusted, and remains constant. The rate of response is extremely rapid, and the circuit is very stable. No elaborate antihunting device is needed. Hunting is prevented by proper adjustment of R_g, which for this machine is 500 ohms.

If a short should occur on the generator, the voltage supply to the transformer is reduced to zero, the relays immediately throw over to the battery side, and the brushes are lowered on the commutator. The machine will function under excitation from the battery circuit until the short is cleared, when the voltage will again build up to normal and close the relays to the a-c side.

The division of current between the grid-control tube and the noncontrolled rectifiers depends upon the voltage drop in the field and upon the voltage of the transformer plate supply (secondary No. 3). For example, if the voltage of the supply transformer is 125 volts on either side of center tap, and the field *IR* drop is 100 volts, the thyratron and the 866 tubes would carry approximately equal currents as measured on a d-c ammeter. If the secondary voltage is doubled to about 250 volts, then most of the current would be carried by the 866 tubes, the thyratron being operative during only a short period of each cycle.

Arnold Benson and Ralph Heidbrak, Electronic Exciter for A-C Generators, *Electronics*, August, 1943, p. 112.

Multivoltage Regulated Power Supply Using Gas-filled Tubes

Two or more stable voltage values in multiples of 15 volts can be obtained from a conventional power supply by using various combinations of four standard gas-filled voltage-regulator tubes, the VR75, VR90, VR105, and VR150. To obtain the sum of any of these four voltages, the tubes are placed in series across the line, with an appropriate dropping resistor in series with the tubes. Subtraction of any of these voltages from the result is then accomplished by putting the combination of tubes whose voltage total is to be subtracted in series with the load. The circuit shown as an example provides two voltages, 135 volts and 45 volts, with the higher being obtained by subtracting the voltage across a VR105 from the sum of the voltages across a VR150 and VR90 in series. The 45 volts is obtained by subtracting the voltage across a VR105 from the voltage across the VR150 that is in series with the VR90. Measured values of regulation were 2 volts variation of the 135-volt output and 1.3 volts variation of the 45-volt output for an a-c line-voltage variation from 105 volts to 125 volts.

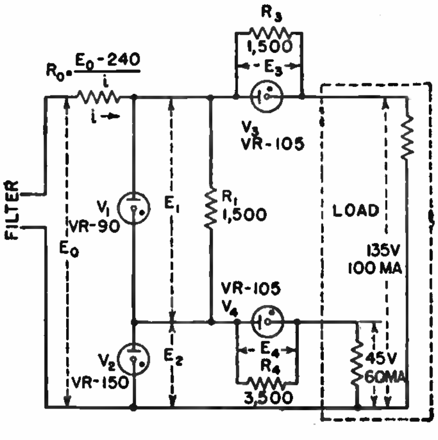

J. R. Mentzer, Multi-voltage Regulated Power Supplies, *Electronics*, September, 1946, p. 132.

Voltage-stabilized Power Supply with Four Output-voltage Ranges

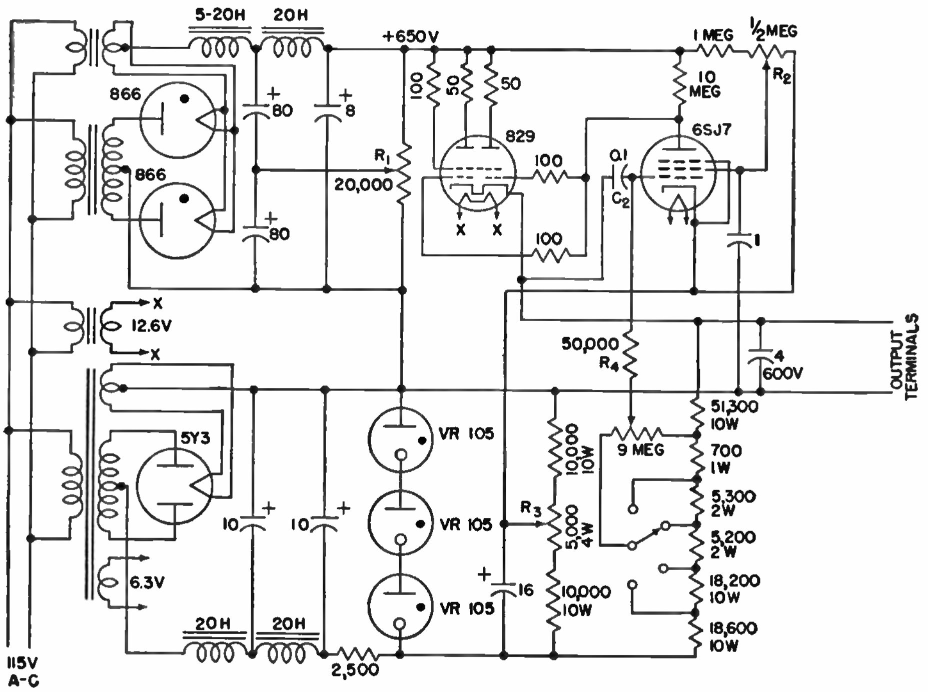

This complete voltage-stabilized power supply has an output voltage of from 0 to 500 volts, attained in four voltage ranges: 0 to 10 volts, 0 to 50 volts, 0 to 100 volts, and 0 to 500 volts. The circuit is conventional with the exception of certain minor refinements, and the values of its components therefore serve as an excellent starting point for designing power supplies for specific requirements. Maximum output current here is 300 ma, with more than 1 per cent regulation between 0 and 500 volts and with a ripple voltage of only approximately 10 millivolts.

The cathode of the control tube has been returned to a potentiometer across the bias supply to provide for a fine zero output-voltage control. The screen of the control tube has also been returned to a potentiometer.

This method of screen return can be adjusted to produce negative regulation; *i.e.*, increased load causes an increase in output voltage, or a decrease in line voltage causes an increase in output voltage. It is this factor that makes possible the good regulation characteristic at low voltages.

Where tubes are to be operated in parallel, it is almost always advisable to include parasitic suppressor resistors in plate, screen, and grid circuits, as shown. The purpose of R_3 and C_2 is to increase the feedback factor for fast changes of output voltage and, hence, reduction in ripple voltage. R_1 connected across the high-voltage supply serves the dual purpose of improved fundamental power-supply regulation and voltage divider for the 80-μf filter capacitors.

To adjust this power supply, first rotate the manual voltage control (R_4) to the zero output-voltage position, and adjust R_3 to give $E_o = 0$. Then R_4 is rotated so that $E_o = 10$ volts. Apply approximately a 33-ohm load (to obtain a full load current of 300 ma). If E_o decreases, R_2 should be adjusted so that a more positive voltage is applied to the screen; this adjustment is critical. Then R_2 is again turned to zero position, and R_3 is adjusted so that $E_o = 0$. This process is continued until the desired regulation is obtained; if E_o increases at step 3, the reverse process is in order. When regulation is attained at low voltages, satisfactory regulation will obtain at the higher values.

G. E. Hamilton and T. Maiman, Voltage-regulated Power Supplies, Part II, *Communications*, December, 1945, p. 70.

Automatic Battery Charger Using Thyratron

In this circuit, semiautomatic control of a heavy-duty charger rectifier is handled by a 2050 tube, which turns the charger off when the battery voltage exceeds a predetermined value and turns it on when the voltage tends to drop below that value.

About 70 volts alternating current is fed to the plate of the 2050 tube through the solenoid of a relay. This relay controls the a-c input to the charger. The full 6 volts from the storage battery is applied as grid bias in the usual manner. However, 6 volts is far too much to allow the tube to conduct; therefore a small a-c voltage is borrowed from the heater winding and is applied in series with the battery bias. The positive peaks effectively reduce the actual bias to the conducting point of the tube when the peak a-c voltage is equivalent to the amount of d-c bias beyond cutoff.

With the proper, effective, combined negative bias to allow the grid to ride just beyond the point where the plate conducts, any drop in battery voltage will reduce the bias enough to allow full conduction. Changing the amount of alternating current in the grid circuit will allow conduction to start at a different battery voltage, and the charger can be caused to turn on automatically at any desired battery voltage from 5 to 7.5 volts. Line-voltage variations do not change the adjustment, because they also cause proportional changes in the plate voltage in the same direction.

The 2050 is an ideal tube for such an application. It has high sensitivity; therefore a small variation in grid voltage will trigger conduction in the plate circuit with a minimum of backlash or sluggishness and the plate circuit will handle enough current to operate a relay that is made for real work. Conduction in the plate circuit takes place over a large portion of the positive cycle and, provided that a sufficiently large bypass is used across the relay coil, no hum or chattering is encountered.

The relay coil, regardless of its resistance, does not present much impedance to the peak current when the coil is bypassed with such a capacitor as ordinarily is necessary. Therefore a series resistor of 100 ohms is included in the plate supply to limit the peaks.

A simple filter is necessary in the plate circuit to prevent r-f radiation. A 0.1-μf 200-volt paper capacitor from plate to

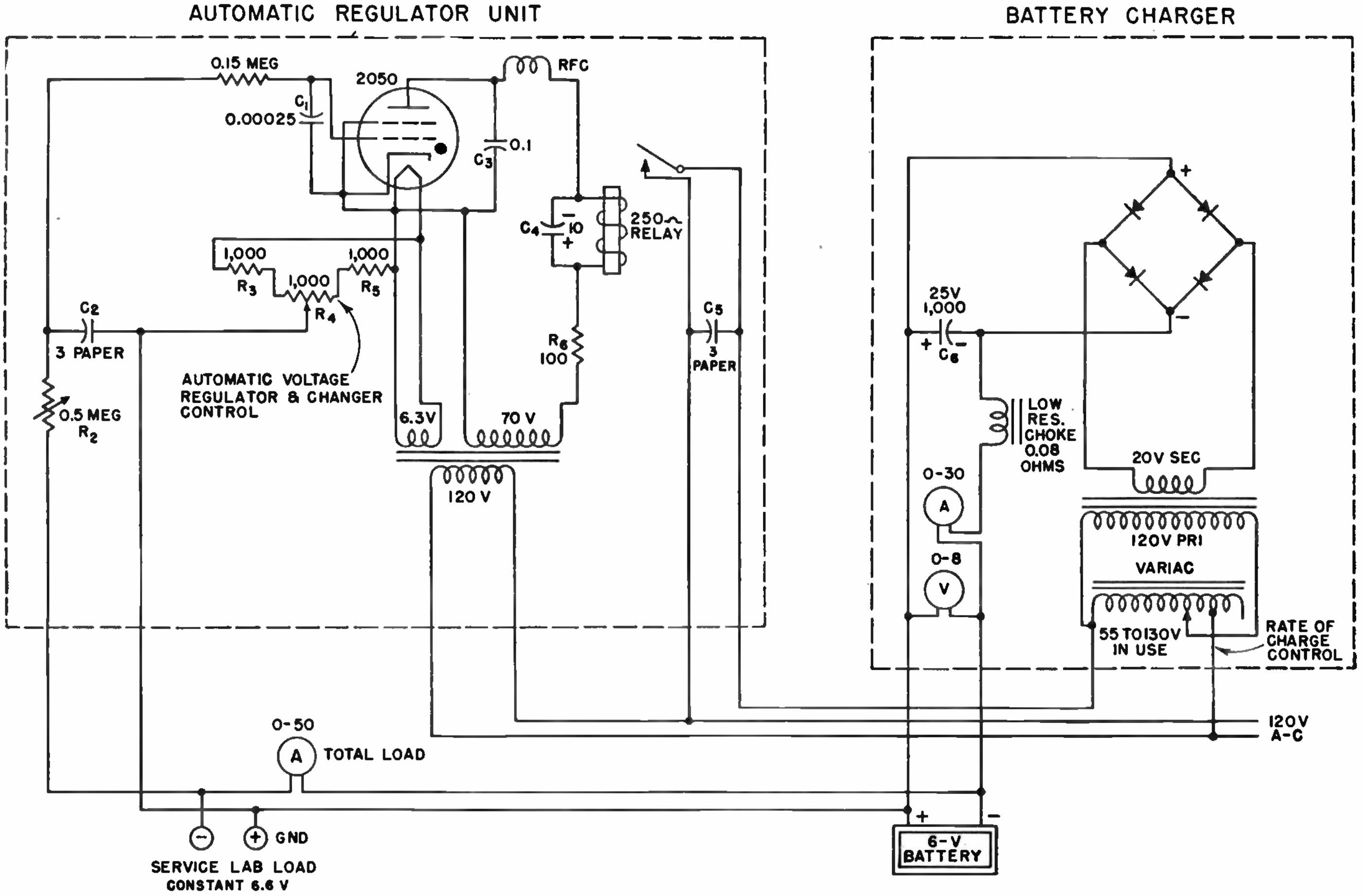

cathode and a small r-f choke in series with the plate supply cure the hash completely.

The action definitely becomes sluggish unless at least 0.1 megohm is in the circuit right next to the grid. Even a 0.01-μf mica capacitor directly from grid to cathode causes sluggishness. However, a 0.00025-μf unit in this position (C_1) causes no noticeable effect, and will prevent a strong r-f carrier from affecting operation. Without a small bypass here, the plate-circuit relay will follow a near-by c-w transmitter at 40 words per minute.

A total of more than 0.25 megohm in series with the grid-cathode circuit also brings on sluggishness. Sluggishness refers to a tendency for the tube to start conducting at one value of grid bias, with a noticeable increase in negative bias necessary to stop conduction. A little of this condition is desirable to keep the charger from turning on and off too often, and is easily regulated with a variable series resistor in the grid circuit (R_2, adjusted to about 0.1 megohm). The large paper capacitor C_2 is added to form a time-delay circuit with R_2, and also to assist in keeping the charger from turning on and off rapidly in case the charger is left at a high rate with no load on the battery.

The range of 2 to 4 volts that appears across R_4 is more than enough to spread the point of conduction in the 2050 from 5 to 7.5 volts battery voltage. This spreads the usually desired range of 6 to 6.6 volts over a convenient portion of the control.

As would be expected, the a-c voltage fed to the plate circuit should be in phase with the a-c voltage in the grid circuit.

Curtis C. Springer, Constant 6-volt D. C. Supply for the Service Lab., *APC Bull.* p. 14.

Degenerative Shunt-type Voltage-stabilized Bias Supply for Power Tubes

The diagram shows the circuit of a degenerative shunt-type voltage-stabilized bias supply that maintains a 65-volt output within very close limits on reverse current swings up to 200 ma, as required for bias on power tubes. Here the grid current of the power tube is in the reverse direction to current flow in the bleeder resistor of the bias supply and tends to remove the load from the supply.

In the conventional shunt type of voltage-stabilizer circuit, two 2A3 tubes can produce an output of about 60 volts when handling a grid-current swing of 100 milliamperes. With such a current swing an output-voltage deviation of about 8 volts takes place. Using the same tubes in the amplified shunt-stabilizer circuit shown in the diagram, the change in output voltage becomes 0.2 volt with the same current swing.

When the circuit is used to supply bias to a modulator or other power tube, the periodic increase of grid current causes a small change in the output voltage of the stabilized supply. This change in output voltage in turn is applied through the voltage-regulator tubes, VR150 and VR-105, in series with resistor R_3, to produce increased bias on the grid of T_1, a 6J7 tube. This action decreases the plate current of the tube, the plate becoming more positive. The positive voltage change is applied to the grid of T_2 and effectively lowers the plate-to-cathode resistance of the tube. The lowered resistance permits additional grid current of the power tube to flow through T_2 and stabilize the circuit.

To minimize the deviation of output voltage necessary for operation of the system, the change of resistance of T_2 is made large for a small change of grid voltage of T_1. Tube T_2 must be capable of a total current variation of from 10 to 210 ma at a plate voltage of 65 volts without having its grid go positive. A pair of type 48 tubes operated in parallel as triodes can pass 210 milliamperes at 65 volts and zero bias, and were therefore used.

Operating potentials at various points in the circuit are indicated in the diagram and are referred to the negative side of the input voltage source. An initial current of 10 ma through the type 48 tubes is permitted to stabilize the VR105 tube. To maintain this current, a negative bias of 25 volts is necessary on the grids of the type 48 tubes. Another 10 ma is allowed to flow through the VR150 for stabilization.

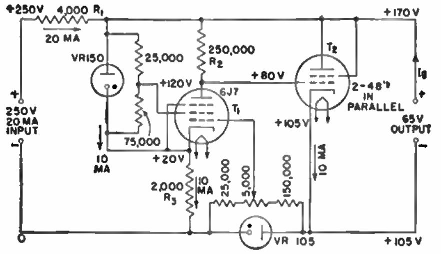

George E. Pihl, Voltage-stabilized Bias Supply for Power Tubes, *Electronics*, September, 1943, p. 160.

Forward-correcting Regulator Circuit Having Stabilization Ratio of 25,000 to 1

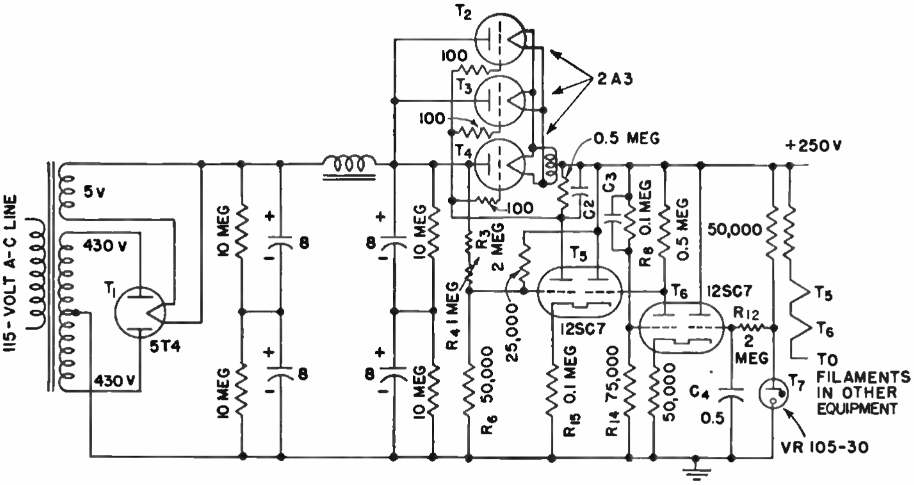

THOUGH it is conventional except for one important detail, the regulator circuit shown here provides a plate-supply voltage of 250 volts that is constant within 1 millivolt despite line-voltage changes of 10 per cent in either direction, and it has a stabilization ratio (factor by which the regulator reduces line variations) of 25,000 to 1. A portion of the output voltage is fed back and compared with a constant voltage reference, the difference is amplified, and the amplified difference is impressed on the grid of an amplifier tube in such phase as to maintain the output voltage constant, in accordance with conventional practice. The addition of voltage-divider network $R_3R_4R_6$ and its connection to the grid of the first section of mixer tube T_5 puts in a forward-acting correction, however, that makes possible the near-perfect regulation achieved with respect to line-voltage variations.

Variation of line voltage from 95 volts to 125 volts changes the output by less than 0.4 millivolt. The output resistance is only a fraction of an ohm. Advance wire resistances should be used for R_8 and R_{14} to minimize temperature drift effects. Resistance-capacitance filter $R_{12}C_4$ is used to eliminate the reference-tube noise voltages. When the regulator is first put into operation, it is necessary to adjust R_4 for a minimum of output hum; this operation will seldom need to be repeated.

Stewart E. Miller, Sensitive D-C Amplifier with A-C Operation, *Electronics*, November, 1941, p. 27.

Negative-resistance Circuit for Continuously Variable Regulated Power Supplies

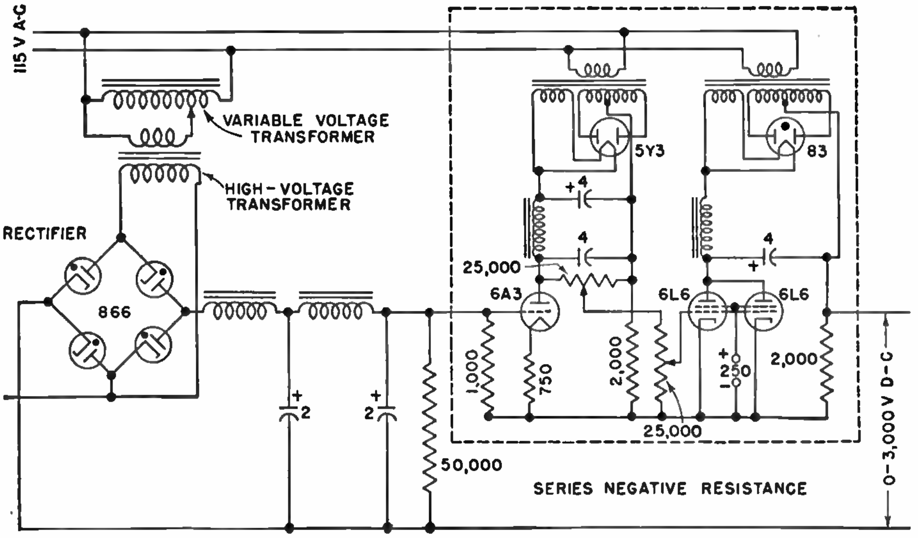

A SERIES negative resistance circuit such as is shown here will, when inserted in the output of a power supply, make the output voltage independent of current over a wide range of voltages. The arrangement is useful in all applications where it is necessary to have a power supply having negligible voltage variation with changing current—in other words, where a power supply with zero internal resistance is required. It is especially advantageous with klystrons, as it permits controlling the output voltage of the power supply continuously from zero to maximum with voltage regulation over the entire range.

If a negative resistance is placed in series with a power supply and its magnitude adjusted so that it just cancels the internal resistance of the power supply, then the power supply in conjunction with the negative resistance will have a zero internal impedance and a varying load will not affect output voltage.

E. L. Ginzton, Stabilized Negative Impedances, Part III, *Electronics*, September, 1945, p. 140.

Regulated Power Supply Using Thyrite Bridge to Develop Control Voltage

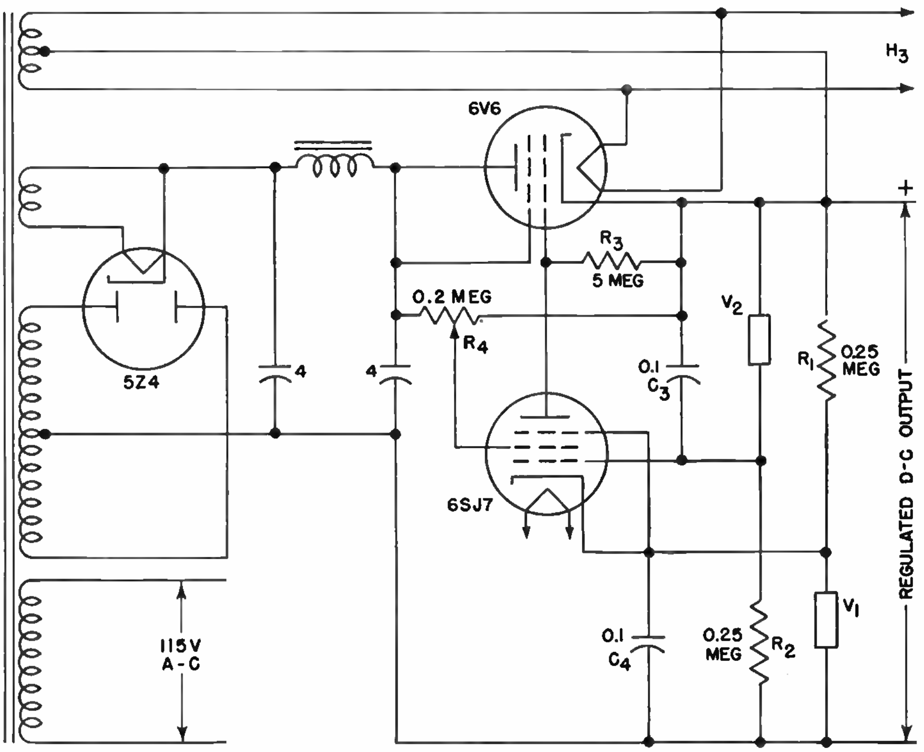

The regulated rectifier circuit given here consists of a full-wave rectifier and filter followed by a series low-impedance triode regulator and an amplifier pentode. The regulated voltage is that from the cathode of the series tube to ground; it is fed to the positive output terminal. The voltage across the output terminals serves as E_{IN} for the Thyrite bridge composed of the resistors R_1 and R_2 and the Thyrite units V_1 and V_2. Either R_1 or R_2 can be adjusted until the bridge is approximately balanced at the desired regulated voltage E_{IN}. Then an increase of this voltage would increase the bridge voltage E_{OUT} fed to the amplifier pentode, making its grid less negative in regard to its cathode. This causes an increase in its plate current, in the voltage drop on the load resistor R_3, and in the bias on the series regulator triode. Reducing the current through the latter then counteracts the initially assumed rise in the regulated voltage.

The bridge yields approximately minus 2 volts as the average control voltage on the amplifier grid. The screen grid of the voltage amplifier can be used for additional control by returning it to a preset high-impedance voltage divider R_4 connected between raw and regulated voltages. The larger the proportion of raw voltage that is fed to the screen grid, the more changes of line voltage and ripple are compensated, or overcompensated.

With a load current of 30 milliamperes, the output voltage rose or sank or was constant, according to adjustment of R_1, with change of line voltages between 90 volts and 140 volts, and between even wider limits with lower load current. The average plate current of the amplifier tube was 4 microamperes, yielding an average bias voltage of minus 20 volts at the grid of the series tube. This current is so small that its effect on V_2 in the Thyrite bridge can be neglected. The bridge was built with Thyrite units resembling 1-watt composition resistors, each passing 0.4 ma at 101 volts. The regulated output was 200 volts.

Heinz E. Kallman, Nonlinear Circuit Element Applications, *Electronics*, August, 1946, p. 130.

Pentode-controlled Voltage Regulator with Gaseous Regulator Tubes

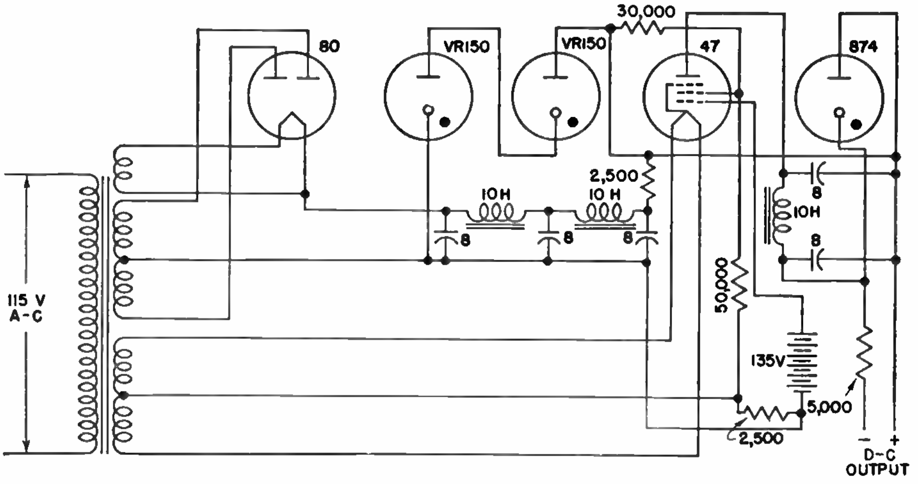

This modification of a pentode-controlled voltage-stabilizing circuit is operated in conjunction with a type 874 gaseous voltage-regulator tube rated at 90 volts. This circuit provides an output voltage of extreme stability, completely protected from a-c transients and long-time surges. The resulting straight trace obtained when the output voltage is fed into a cathode-ray oscilloscope is indistinguishable from a d-c battery trace, even when the equipment is operating at full sensitivity. All traces of 60- and 120-cycle voltages and their harmonics are entirely absent.

Eugene H. Woodman, Electronics Aids Waterway Development, *Electronics*, September, 1945, p. 120.

Simplified Electronic Regulator for Small A-C Generators

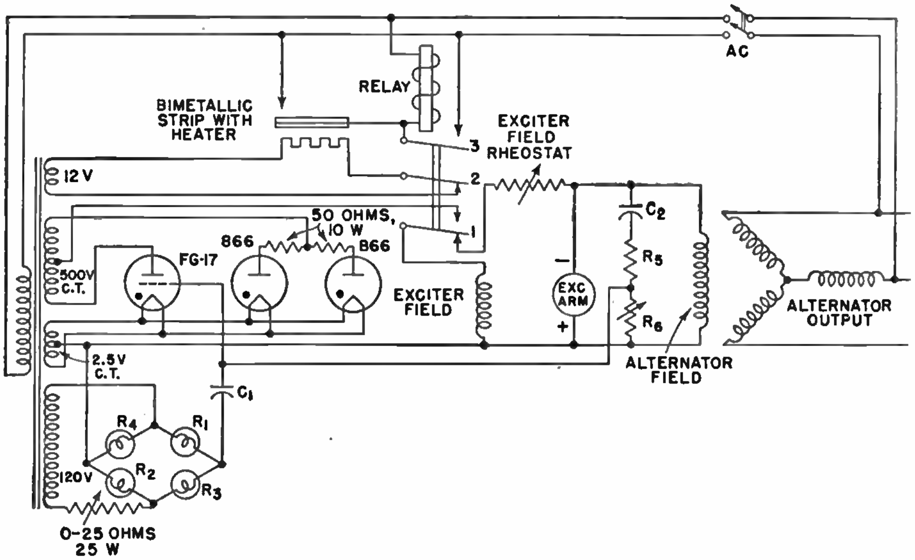

Where the maximum d-c field current of an alternator field does not exceed 1 ampere, inexpensive type 866 mercury-vapor rectifier tubes may be used with a small thyratron and the voltage-sensitive bridge of the previous circuit for an even faster response to output-voltage changes.

The plate supply is a center-tapped 500-volt winding that serves a full-wave rectifier circuit feeding the exciter field directly. The response is sightly more rapid than that of the previous regulator, but the adjustment of antihunting circuit $R_5R_6C_2$ is more critical. For this reason R_6 is a 1,000-ohm fixed resistor in series with a 5,000-ohm variable wire-wound resistor that can be adjusted readily to eliminate hunting. Reducing this resistance reduces the sensitivity of the regulator; hence the maximum value that gives stable operation should be used.

The rectifiers are two 866/866*A* tubes operated in parallel for one half of the cycle, and an FG17 thyratron for the other half cycle. If one half of the cycle of a rectifier feeding an inductance is controlled, the current during the other half of the cycle will necessarily be the same, due to the inductance. Thus only one grid-controlled tube is needed.

Two 866 tubes are used in parallel because they normally carry the greatest part of the current, with the grid-controlled tube operating over a very small portion of the cycle. To make these two 866 tubes divide the current equally, a 50-ohm 10-watt fixed resistor is connected in series with each of the tube plates.

The 866 tubes continue to conduct until the applied voltage on the grid of the control tube becomes less negative than the grid-control characteristic, even though these tubes may be conducting in the range where the applied voltage is in the wrong direction. This action is due to the inductance of the exciter field. The grid-control tube cuts off as soon as the applied voltage on the 866 tubes is sufficient to equal the internal tube drop, at which time the pair of tubes again takes over.

Since these tubes reach operating filament temperature in 15 to 20 seconds, the time-delay device is considerably simplified. A 20-second delay thermal strip that operates on 12 volts is used.

The field rheostat is set by hand to give rated voltage when the machine is brought up to normal speed. At the end of the 20-second time-delay interval, contact 4 on the thermal delay closes, energizing the relay coil. Relay contact 1 then connects the exciter field to the regulator. Relay contact 3 closes, providing a holding circuit that keeps the relay energized. Relay contact 2 opens, breaking the circuit through the heater on the thermal delay and allowing this heater to cool down in readiness for another cycle of operation.

Arnold Benson, Electronic Regulators for A-C Generators, *Electronics*, April, 1943, p. 104.

WELDING CONTROL CIRCUITS

Half-cycle Thyratron Timer for Welding Small Radio-tube Parts

THIS half-cycle electronic timer for welding small parts was engineered and constructed for welding operations in the radio-tube industry, where extremely short but uniform welding time is important. It provides uniform welds, with freedom from excessive oxidation and sticking of the electrodes.

Fundamentally, the circuit limits the current application for each weld to the time duration of a single and complete half cycle of the 60-cycle supply line, regardless of the instant of closing the contactor. This is accomplished through the use of a grid-control rectifier tube connected in series with the primary supply to the welder. This tube is capable of handling primary currents up to 77 amperes and is intended for use in 110-, 220-, or 440-volt supplies. The tube is a product of Electrons, Inc., Newark, N.J., and is known as their type C6J.

In the Idling position of the timer, alternating current is applied to the grid exactly 180 degrees out of phase with the anode, so that at no time during the cycle are the firing conditions satisfied. The grid bias is obtained through a transformer providing secondary voltage of 55 volts and energized from the same line that supplies the anode, but connected for out-of-phase operation. Actually the schematic diagram shows two transformers here, the reason being that these are standard and are more readily available than a single 220-55-volt unit.

In the Idling position, relay contacts S_1 and S_2 are closed. When the foot switch at the welder is depressed, it energizes this delay, opening both circuits. Opening of S_1 inserts R_1 in the 55-volt secondary circuit and this, in conjunction with C_1, causes a phase shift of a few degrees in the voltage applied to the grid, with the result that at some point in the cycle the tube will fire, and current will be supplied to the welder.

The grid is positive for the first few degrees of the positive plate cycle. As this is the only part of the cycle during which firing conditions are satisfied, no current flows after closing S_1 until the beginning of the next succeeding positive half cycle, at which time a complete half cycle of line voltage loses control as long as the anode is positive. The current drawn during this period depends on the welder and is practically unaffected by the tube.

While the tube is conducting, C_2 is charged through the type 83 rectifier, with a resulting high negative bias on the C6J grid, which prevents firing on succeeding cycles. The network R_3C_3 is provided to eliminate supply-voltage disturbances from the grid circuit. With release of the foot switch at the welder, the relay contacts close. S_2 allows C_2 to discharge through R_2, while S_1 shorts out R_1, allowing the 180-degree out-of-phase idling operation of the C6J tube to be resumed.

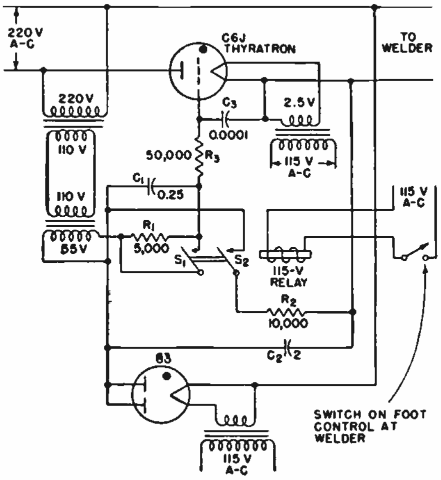

J. Kurtz, A Feedback Welding Timer, *Electronics*, April, 1940, p. 47.

Power-intensity and Timing-control Circuit for Spot Welding

CURRENT at any desired value up to 200 amperes rms can be delivered for any predetermined time from a fraction of a half cycle up to 60 half cycles of the 60-cycle power supply with this coordinated application of two basic electronic circuits, a biased multivibrator and a regenerative d-c amplifier that serves as a controlled square-wave generator.

The welding transformer is connected to the 230-volt a-c power source through two pool-type mercury-vapor tubes connected in parallel inverse so that they will conduct current on both halves of each a-c cycle. These tubes receive a high-voltage spark on the outside of the glass bulbs near the surface of the mercury to initiate the cathode spot and cause conduction at precisely the desired instant. By generating a predetermined number of these sparking impulses (up to 60), the control circuit determines the duration of the weld, and by varying the position of the impulse in each half cycle the control circuit determines the rms weld current.

The spark impulses are produced alternately by discharge of capacitors C_1 and C_2 through stepup transformers TR_1 and TR_2, with the two strobotron tubes serving to discharge the capacitors in response to the combined effect of two signals applied to the inner and outer grids of each. The inner grid (nearest the cathode) receives sharply peaked waves which are definitely phased in regard to the a-c line voltage acting on the mercury-pool tubes in the welding circuit, while the outer grid of each strobotron receives a timing signal which governs the total time during which each negative peak applied to the inner grid is effective in initiating the strobotron discharge.

The regenerative amplifier circuit serves to send out two sets of sharply peaked waves 180 degrees out of phase with each other and perfectly synchronized at any arbitrary desired phase with respect to the a-c line voltage.

When the starting switch is operated, the biased multivibrator (another form of regenerative circuit) receives an impulse through the coupling tube and sets up conduction in T_8. This stops conduction in T_9 for a time determined by the time constant of the RC circuit (C_8 and R_{17}) between the two tubes. When tube T_9 is not conducting, a positive bias of about 65 volts is applied to the outer grids of the two strobotrons, with the result that the combined effect of this positive bias

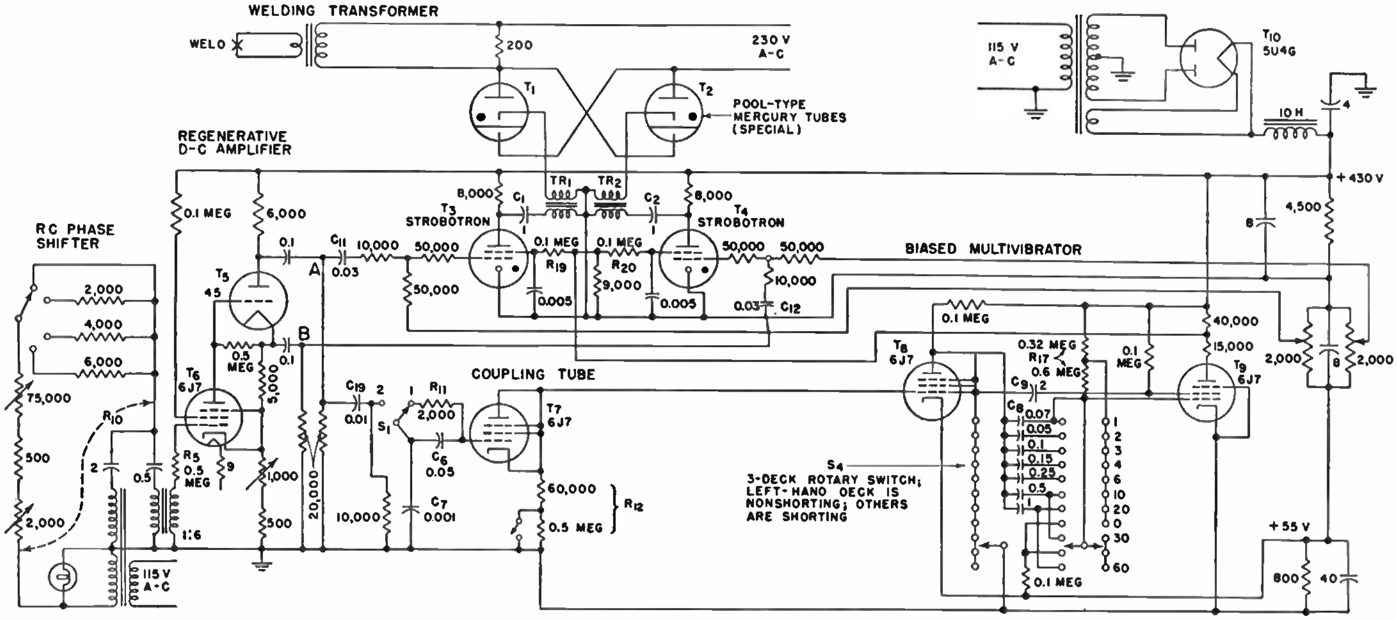

and the negative peaks applied to the inner grids determines the number of times the strobotrons will conduct after operation of the starting switch.

The coupling tube is operated as a diode and is connected to output terminal A of the peak-wave generator (regenerative d-c amplifier) through wave-sharpening capacitor C_{19} when starting switch S_1 is moved to position 2. The first positive peak arriving after operation of the starting switch charges capacitor C_6 and makes the first grid of T_7 (serving as the anode of the diode) positive with respect to the cathode. The resulting instantaneous voltage drop across cathode resistor R_{12}, practically equal to the peak voltage at A, starts the biased multivibrator timer. Capacitor C_6 is charged sufficiently high by the first positive peak so that second and successive peaks cannot set off or interfere with the operation of the timer.

When the starting switch, a pushbutton type, is released at the end of the weld, the switch arm returns to its normal position 1 and capacitor C_6 discharges through R_{11} in readiness for the next weld. Bypass capacitor C_7 permits use of a long three-conductor cable to the switch, so that a foot control may be used to start the welding operation.

The strobotrons are cold-cathode arc discharge tubes requiring a difference in potential of about 90 volts between their two grids for starting, and with an anode voltage at least 250 volts positive with respect to the cathode. The timing signal from the multivibrator is applied to the outer grids of the strobotrons through resistors R_{19} and R_{20}, while the two 180-degree-out-of-phase synchronizing signals for the inner grids are obtained from points A and B through capacitors C_{11} and C_{12} and associated resistors. Peak waves, alternately positive and negative, are thus applied continuously to the inner grids, but since their amplitude is only about 75 volts, they cannot start the strobotrons without the help of the timing signal. This is about 65 volts positive, which combined with a 75-volt negative pulse gives a potential difference of 140 volts, more than enough to start the strobotrons. Bias potentiometers permit applying additional negative bias to the inner grids individually to compensate for tube variations; holdover is a sign of excessive bias, while irregular firing indicates insufficient bias.

In the first seven positions of rotary switch S_4 the timing resistance R_{17} is 320,000 ohms and the various associated values of C_8 give times of 1, 2, 3, 4, 6, 10, and 20 half cycles, respectively, as labeled alongside the switch contacts. Two additional times, 30 and 60 half cycles, are obtained with 920,000 ohms resistance and reuse of the two largest capacitance values.

Construction details of the special pool-type mercury tubes are given in the original article, along with additional data on circuit theory and operation.

Wayne B. Nottingham, An Electronic Circuit to Control Intensity and Timing of Power for Spot Welding, *Rev. Sci. Instruments*, June, 1943, p. 161.

Reactance-limited Capacitor-charging Rectifier for Spot Welding High-conductivity Metals

In spot welding aluminum, magnesium, and other high-conductivity materials, the high-voltage rectifier circuit shown here charges a large capacitor bank from an a-c supply. When the capacitor voltage reaches a predetermined value (between 1,500 and 2,500 volts), the rectifier is blocked and the capacitor energy is discharged into a welding transformer. After the weld is made, the capacitor bank is recharged and maintained at the correct voltage until required to supply current for another weld.

The rectifier used to charge the capacitor bank must be designed so that the initial charging current to the capacitor is limited. This can be accomplished by the reactance in the rectifier transformer. Also, the rectifier transformer should be designed to take into account the intermittent operation and the decrease in rectifier current as the capacitor is charged.

The problem is to design a rectifier that will charge a given capacitance to a particular voltage in as short a time as possible with a minimum demand on the a-c supply.

The rectifier is a single-phase full-wave type using thyratrons as grid-controlled rectifying elements, with a special reactance-limited transformer. The leakage reactance of the transformer was sufficient to limit secondary short-circuit current to 5.8 amperes rms. This reactance was obtained by wide physical spacing of the primary and secondary windings, but could have been accomplished more compactly by inserting a magnetic shunt between the two legs.

A negative voltage of about 100 volts was applied to the grids of the rectifier tubes to prevent them from conducting. The rectifier tubes were made conductive by closing switch *S*, which changed the bias on the rectifier-tube grids from 100 volts negative to 25 volts positive (measured ouside of the grid resistor). An 80,000-ohm resistor was connected across the output terminals of the rectifier to serve as a bleeder on the capacitor bank.

In this rectifier the starting transient results in one tube carrying a higher peak current and conducting for a longer period (more than 180 degrees) than under steady-state conditions. Because the second tube cannot begin to conduct until the first tube has ceased conducting, the second half cycle will be short and the tubes will carry unequal currents.

Such transients are undesirable because tube ratings may be exceeded. In practice the transient can be eliminated by starting with the rectifier tubes phased fully back and advancing the firing angle to full forward in several cycles.

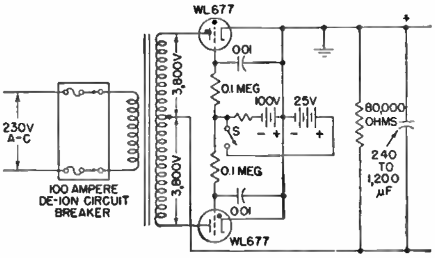

Harry J. Bichsel, Capacitor Charging Rectifier, *Electronics*, January, 1946, p. 123.

Capacitor-discharge Welding Circuit

A SPECIAL U-shaped double mercury-pool tube is ionized by a spark coil here to initiate discharge of the 56-μf energy-storing capacitor through the primary of the welding transformer. Use of an air-core transformer is possible because a damped oscillatory discharge is obtained, and residual magnetism difficulties are thereby eliminated. In conventional stored-energy welding systems there is often a relatively long period of decay of the current due to an iron core, restricting the speed at which successive welding operations may be made.

In the circuit shown, the 56-μf capacitor is charged through an FG17 thyratron rectifier tube, with a 5,000-ohm resistor in series to limit the initial rush of charging current. Charging takes 0.25 to 1 second, during which time the 1-μf capacitor is also charged. The voltage to which the capacitor is charged can be changed by means of the potentiometer in the grid circuit of the thyratron. To make a weld, the switch in the primary of the spark coil is closed, allowing the 1-μf capacitor to discharge through the primary. The 12,000-volt secondary of the spark coil is connected between one mercury pool and a metal band outside the U-shaped tube just above the pool, ionizing the mercury vapor and starting the oscillatory discharge through the welding transformer.

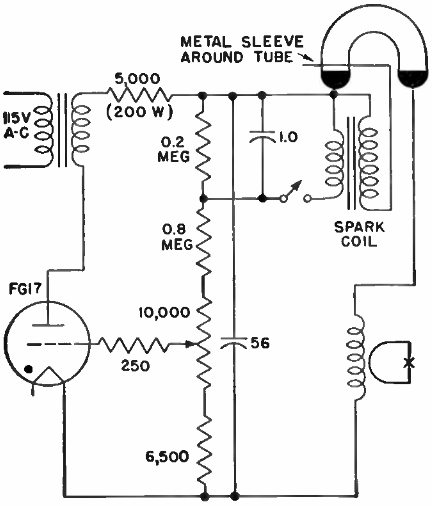

The short heating cycle of this high-frequency welding system permits concentration of welding energy at the junction between parts being joined, minimizing discoloration, deformation, and crystal growth in the materials being welded. Thin wires and sheets, as well as such difficult-to-weld combinations as tungsten to tungsten and fine wires to thin sheets, can be handled successfully.

C. H. Strange, Self-forging Welder, *Electronic Industries*, July, 1945, p. 109.

Half-cycle Spot-welder Control Using Strobotron Cold-cathode Tube

PRECISELY controlled time intervals within the duration of a half cycle are provided by this welding control circuit that incorporates a strobotron cold-cathode control tube and a band-igniter mercury-arc tube.

The strobotron circuit serves to deliver to the starting band on the mercury-arc tube a high-voltage peak accurately timed with respect to the wave formed on the power line, normally impressed across the mercury-arc tube. The strobotron-controlled mercury-arc tube becomes conducting for that fraction of the positive half cycle that remains after the starting impulse is delivered. The arc extinguishes itself at the end of the half cycle, and the mercury-arc tube remains nonconducting until another impulse is given to the starting band by the strobotron.

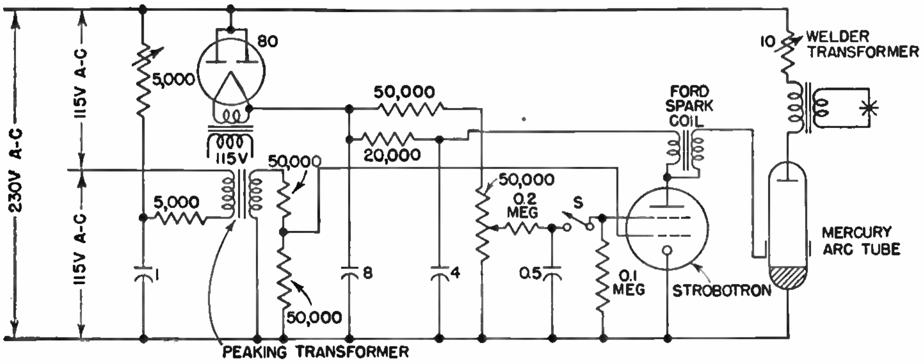

The type-80 rectifier tube is used to charge up a capacitor that, when discharged through the strobotron and the primary of the spark coil, produces a high-voltage pulse to set up the arc in the mercury-vapor tube.

T. S. Gray and W. B. Nottingham, Half-cycle Spot Welder Control, *Rev. Sci. Instruments*, February, 1937, abstracted in *Electronics*, May, 1937, p. 66.

AUTHOR INDEX

SUBJECT INDEX