Principles and Practices of Telecasting Operations

•

HAROLD E. ENNES
Staff Engineer — WIRE
Technical Director — WAJC (FM)
Instructor Radio & Television —
Jordan College of Butler University

•

FIRST EDITION

•

HOWARD W. SAMS & CO., INC.
INDIANAPOLIS 5, INDIANA
1953

To Mary Lou

Preface

Television stands today as a challenge to every man in the field, or contemplating the field; a challenge to meet the multitude of new practices and operational techniques involved in a complex job. As the novelty of this new medium gradually wears off from familiarity, it is more and more imperative that improvements of operations and technical production techniques jump ahead of the beginnings already made.

The purpose of this text is twofold; to serve as a thorough training guide for prospective operators (as distinguished from research or design engineers), and to provide a reference handbook for operators already in the field. *The reader should have fundamental radio knowledge, and have, or be concurrently studying for, a Radiotelephone First Class Operators license*, or equivalent background.

The handbook is arranged as follows:

Chapters (1-5) — WHAT THE OPERATOR SHOULD KNOW ABOUT THEORY.

Chapters (6-8) — OPERATING TV STUDIO EQUIPMENT.

Chapters (9, 10) — OPERATING TV FIELD EQUIPMENT.

Chapters (11, 12) — TRANSMITTER CIRCUITS, OPERATION AND MAINTENANCE.

Wherever actual schematic diagrams of commercial equipment is presented the manufacturer's literature pertaining to it is *omitted*. Commercial data assumes that the user is completely familiar with all the required theory. Therefore, so that the reader may gain the utmost from the presentation, the author has used schematics of actual TV equipment circuitry, but described the function in terms of basic theory. In this way, the practicing operator, especially the newcomer to TV, is able to understand the equipment he uses in relation to fundamental theory.

Chapter 1 contains an elementary approach to the function performed by each piece of apparatus in the TV system. This chapter should be studied by every reader who has not received a basic training in television theory. The more advanced reader will find it an excellent review to refresh and clarify the overall picture of television broadcasting.

Chapter 2 through 5 take up the details of each component. from the camera lens to the transmitter antenna, thus presenting the necessary theory in easy steps.

The setup of equipment, operation, and maintenance is thoroughly covered in Chapters 6 through 12. It is of utmost importance that the reader be well grounded in basic theory contained in Chapters 1 through 5 before undertaking the remaining portions. Any discussion of the practical operation of TV equipment can be very confusing and of little practical value if the theoretical functioning is not well understood.

The Appendix contains a detailed Glossary of Production Terms and Technical Definitions for reference. It also contains a handy reference guide to TV Rules and Regulations most important to the operator.

Acknowledgments

The author wishes to express his sincere appreciation to the following individuals, organizations and manufacturers, whose interest and material aid made this text possible:

James B. Tharpe, Television Transmitter Division, DuMont Laboratories.

G. W. Griffith, D. S. Campbell, E. L. Robinson and Robert E. Lauterback of the General Electric Co.

Arthur H. Jones, Vice President of the Gray Research & Development Co.

William O. Hadlock and S. F. Phillips of the Radio Corporation of America.

W. E. Neill of Raytheon Manufacturing Co.

W. I. Kisner of Eastman Kodak Co.

Jack Peglar of the Back Video Corp.

James D. Secrest of the Radio-Television Manufacturers Association (RTMA).

Richard B. Holt of the American Telephone & Telegraph Co. (AT&T).

Fred Whitney of the Society of Motion Picture & Television Engineers (SMPTE).

C. E. Worthen of the General Radio Co.

To American Telephone & Telegraph Co. (AT&T); DuMont Laboratories Inc.; Eastman Kodak Co.; General Electric Co.; General Radio Co.; Gray Research & Development Co.; Radio Corporation of America; Radio-Television Manufacturers Association; Raytheon Manufacturing Co.; and the Society of Motion Picture & Television Engineers (SMPTE).

To the engineers whom the author chanced to meet at WFBM-TV; WTTV; WLW-T; WLW-D; and WENR-TV.

HAROLD E. ENNES
Sept. 1952

Table of Contents

CHAPTER 12

APPENDIX 1

APPENDIX 2

CHAPTER

1

Introduction to Television: What the Equipment Does

Introduction to Chapter One

We are about to plunge headlong into a basic description of each major component concerned with the video signal at the TV broadcast station. In practice, these various units are so interdependent that it is difficult to clearly illustrate the exact functioning of any one unit without some mention of another unit. With this thought in mind, it is the purpose of this introductory section to give a brief overall view of the problems encountered, so that the strictly tyro reader will grasp more of the content of the following sections. Fig. 1 is presented to aid in this understanding.

This figure is a simplified block diagram of all units discussed at studio and transmitter. The numbers designate the section number which concerns this particular unit. It would be well for the reader to refer to this diagram often during the rest of the chapter so that the orientation of equipment may be clearly defined.

The lens focuses the scene to be televised upon the pickup tube within the pickup head. The pickup head and viewfinder constitute the television camera. The image that is thus placed upon the photosensitive surface of the camera pickup tube imparts a charge upon the surface which corresponds point by point with the light or dark content of the picture.

Before we can pick off these varying charges element by element, some means must be found to precisely relate the time at which such action is started. The synchronizing generator does this very thing. Every electrical action that takes place in the video signal process is directly controlled by this unit. Thus when a camera driving pulse is supplied to the camera for the purpose of exactly timing a certain function, a so called "sync pulse" is simultaneously transmitted on the video carrier to "trigger" the receiver action at the same time. Fig. 2 represents the functions of one line of a picture of varying shades of gray from white to black to white again.

Within the pickup head are multivibrator circuits which generate a "sweep current" to "scan" the image. (Refer to Fig. 2 during this description.) This means that a beam of electrons similar to that in a cathode-ray tube is caused to sweep across the image and become modulated by the charges at the various points upon the image surface. When a certain time has elapsed which corresponds to the time it takes the beam to sweep exactly one line of the whole picture, the driving pulse is received. This pulse triggers the circuit causing a rapid reversal of the scanning beam so that it is in a position to start another line of image scanning. At this same time, the horizontal (or line) sync pulse is transmitted on the video carrier which causes the receiver sync circuit to be similarly triggered. Also at approximately this same time, a "blanking" pulse is transmitted. This pulse drives the receiver picture tube into cut-off, extinguishing

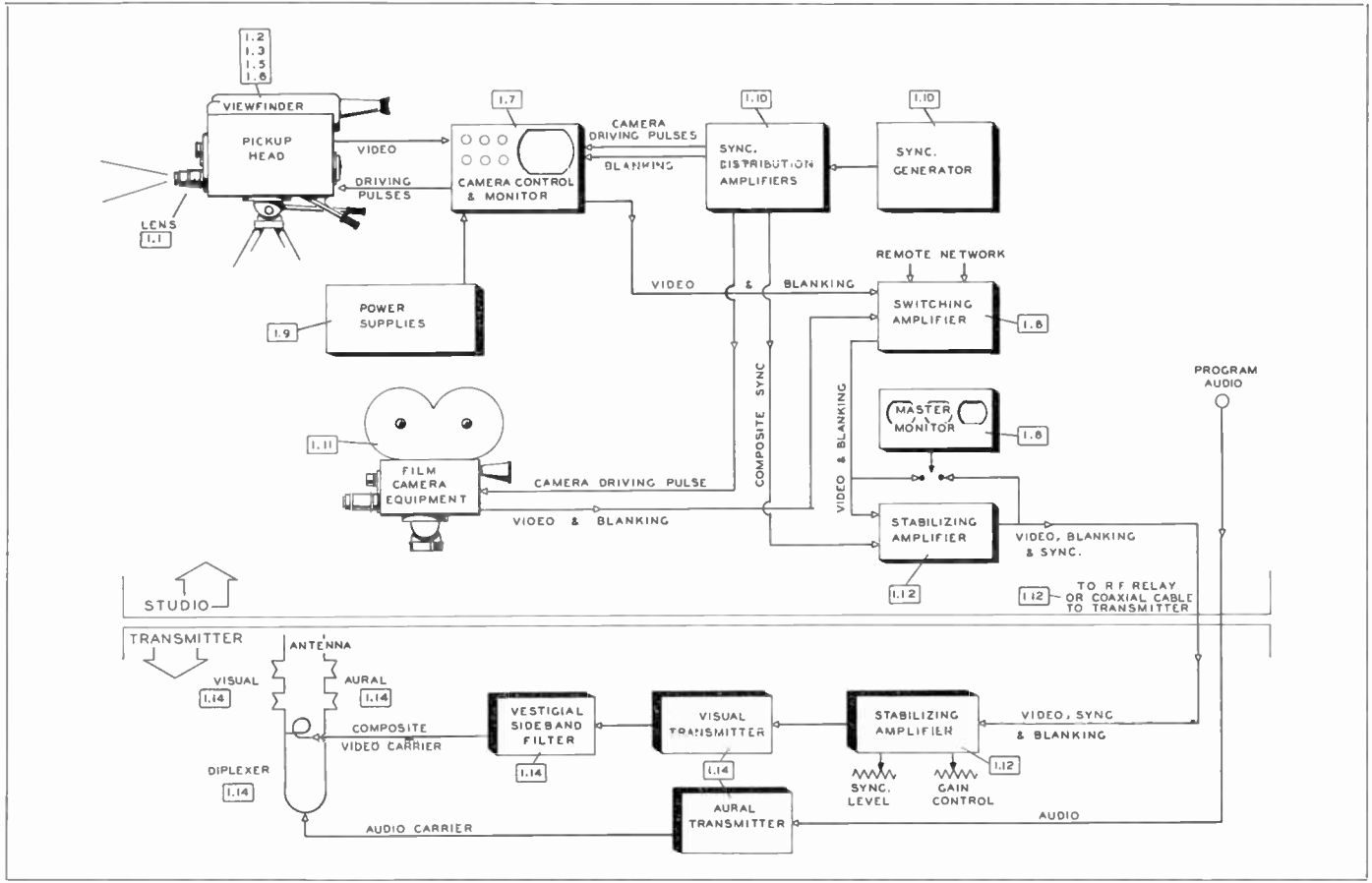

Figure 1. Block diagram of units described basically in Chapter 1. The associated numbers indicate the section pertaining to that unit.

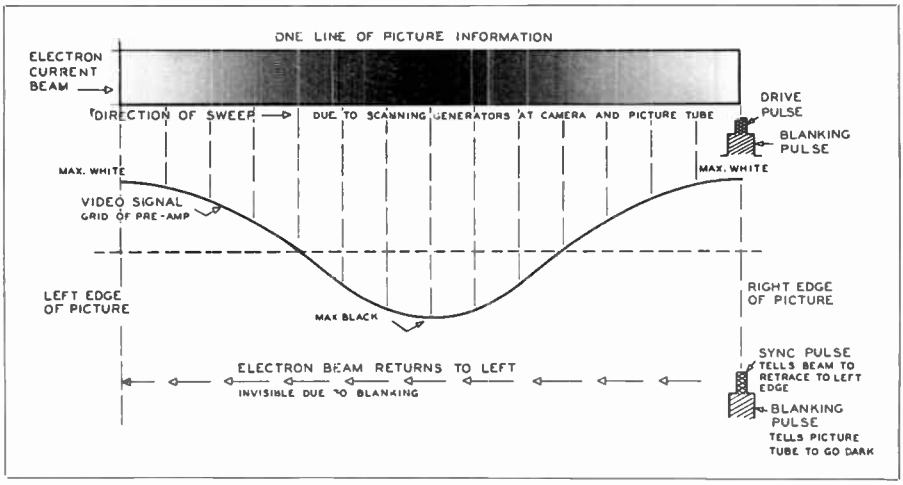

Figure 2.

the beam so that this rapid retrace line will not be visible to the viewer.

This action is repeated until the camera scanning beam has reached the bottom of the image. Now it must be returned to the top of the picture to start another complete scanning process. At this time, a *vertical* driving pulse is received from the precisely timed sync generator which causes the scanning beam to return to the top of the picture raster. Also, a *vertical* sync pulse is transmitted upon the video carrier so that the receiver is triggered the same way. Again, a blanking pulse is simultaneously transmitted which causes the retrace line to be invisible.

As shown in the block diagram of Fig. 1, the pulses from the sync generator are first fed to a sync distribution panel. Camera driving pulses are fed from this panel to the camera control unit in the studio, and through this unit (via coaxial cables) to the camera in the studio. This camera control unit also receives the video output signals from the camera, amplifies and controls them in amplitude and quality, and passes them on to the switching panel. It should be noted that the composite sync pulses from the sync distribution panel are fed to a "stabilizing" amplifier which feeds the line to the transmitter. This composite sync is made up of horizontal and vertical sync pulses. Blanking pulses are usually inserted at the camera control unit. The composite sync and blanking are therefore transmitted along with the video signal from the same output amplifier. The camera driving pulses are not transmitted, but supplied only to the camera and film equipment. They are precisely related in time to the composite sync by the functioning of the sync generator. Thus the transmitter and receiver functioning is exactly coordinated in operation at any instantaneous time.

As shown, the TV transmitter is actually two transmitters, one visual and one aural. These signals are combined in the antenna and radiated into space.

1.1 *Basic Function of the Lens*

There is, in the human eye, a device known as the "crystalline lens," which causes the diverging waves of light to *converge* upon the *retina*, or light-sensitive surface at the back of the eye. Without such a lens, only a confused jumble of light would strike the retina. Thus light waves from many different points must be "focused" upon a corresponding point on the retina of the eye.

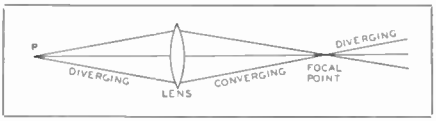

Figure 1.1A. Basic action of a lens.

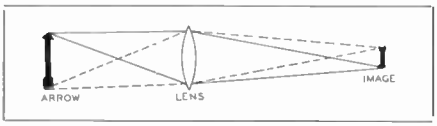

Figure 1.1B. Formation of the image by the lens. Showing how the image is inverted from the object focused upon. The rays of light from the center of the arraw (not shown in this diagram) are obviously bent an equal amount from the outer edge of the lens (See Figure 1.1A) and converge again at the center.

The basic function of the lens is illustrated in Fig. 1.1A. Light waves travel only about two-thirds as fast through glass as through air. When an advancing wave enters a medium in which it is retarded in velocity, and if it strikes the medium obliquely (as the two outer rays in Fig. 1.1A), it will be bent as shown because one part of the wave is checked in speed before the other part. The rays through the center of the lens, since they do not strike obliquely, continue on through the lens in a straight line, although retarded in velocity. Thus the light waves converge upon a point known as the "focal point" behind the lens, after which they diverge again and are no longer "in focus."

The image focused upon the light sensitive surface behind the lens at the focal point, is "upside down" from the object focused upon. This is illustrated in Fig. 1.1B. An arrow is the object focused upon. The rays from the top of the arrow (shown by solid lines) are bent in passing through the lens as shown, and converge at the bottom of the image being formed. Conversely, rays of light from the bottom of the object (shown by dotted lines) will be converged upon a point above that of the tip in the image. Thus the image formed by a lens is upside down from the object focused upon.

Colors, being essentially different wavelengths of the visible spectrum, act differently from one another upon passing through an ordinary lens. Although they travel at the same velocity relative to one another in the air, such is not true when they pass through any other medium. Fig. 1.1C illustrates the effect of an ordinary "uncompensated" lens when white light (all colors) are being passed. Two colors are shown, red and blue. The blue rays will be bent a greater amount than the longer wavelength red rays, and therefore will be focused at a point nearer the lens.

In actual practice, TV lenses are not the simple type of "biconvex" lens that have been shown thus far. As shown above, an ordinary lens will not focus the various colors of the spectrum at the same point behind the lens. Therefore, the TV camera lens may be composed of a number of lenses of varying curvatures to correct certain defects. Fig.

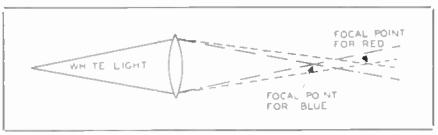

Figure 1.1C. The shorter the wavelength of the light rays, the greater is the bending effect of a given "uncompensated" lens. The shortest wavelength of visible light is violet, then blue, green, yellow, orange, and (the longest visible wavelength) red.

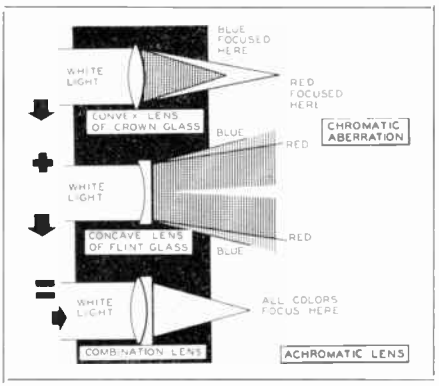

Figure 1.1D. Basic development of the achromatic lens. A convex lens of crown glass suffers from chromatic aberration as shown. A concave lens of flint glass results in variance of diverging colors as shown. Therefore, a combination of the types of lenses, corrects the defect of either lens.

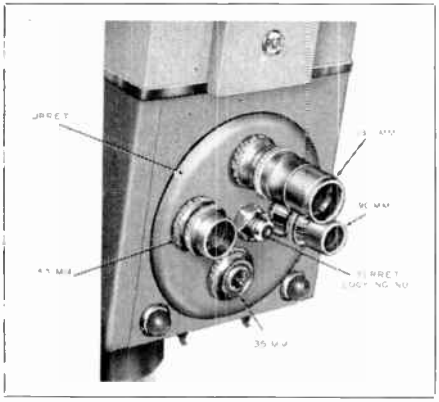

Figure 1.1E. Television camera lens turret with 4 size lenses.

1.1D shows the basic idea of a "color corrected lens." The original fault is known as "Chromatic aberration." A lens corrected as shown in Fig. 1.1D is known as an "achromatic lens," meaning that chromatic aberration has been corrected. Another fault with an ordinary single lens is that it cannot form an image entirely flat, that is, the edges of the image are apt to be less sharp than the center. Such a defect is known as "astigmatic aberration." A lens corrected for this fault is an "anastigmatic lens," sometimes called "anastigmats."

Many TV lenses are coated with a layer of magnesium fluoride approximately 4×10^{-6} inches thick. This reduces the amount of light *reflected* from the surface of the lens, thereby increasing the efficiency of light passage through the lens. Such lenses are recognized by a bluish or pale tint.

The TV camera lenses are mounted upon a "lens turret" accommodating 4 different types as shown in Fig. 1.1E. The turret is rotated by the operator from the rear of the camera.

1.2 *The Pickup Tube*

A microphone is an audio transducer, that is, it converts varying air pressures constituting sound waves into corresponding electrical waves. The TV camera is an optical-video transducer, which converts the reflected light waves reaching the lens, to corresponding electrical impulses.

The entire camera (not including the viewfinder) is termed the "pick-up head." It contains the lens and iris system, pickup tube, horizontal and vertical deflection coils, alignment coil, focusing coil, horizontal and vertical deflection amplifiers, blanking amplifier, and video signal preamplifier.

There are two principal types of pickup tubes used in TV transmission systems, the *Image Orthicon*, and the *Iconoscope*. The image orthicon is used in studio and field cameras for "live" pickups. The iconoscope is used largely for telecasting motion picture film and slides.

The *Iconoscope* tube illustrated in the photo of Fig. 1.2A was the first practical all-electronic principle type of pickup tube developed. It was used for many years for all types of TV programming, but is now used principally for telecasting motion picture films or slides.

Fig. 1.2B illustrates the basic action of the iconoscope. The tube is composed of two main sections, *the beam-forming and scanning section* and the *image section*. The former section contains an electrostatically focused electron gun, and electromagnetic deflection coils for the horizontal and vertical scanning currents. The image section contains a light-sensitive *mosaic*, which has a metallic surface backplate, and a metallic signal collector ring.

The *mosaic* of the iconoscope is a sheet of mica upon which are thousands of individual "silver globules" insulated

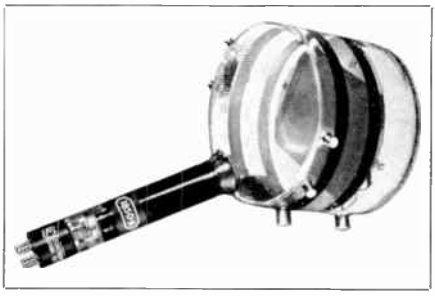

Figure 1.2A. RCA 1850-A Iconoscope. Courtesy RCA.

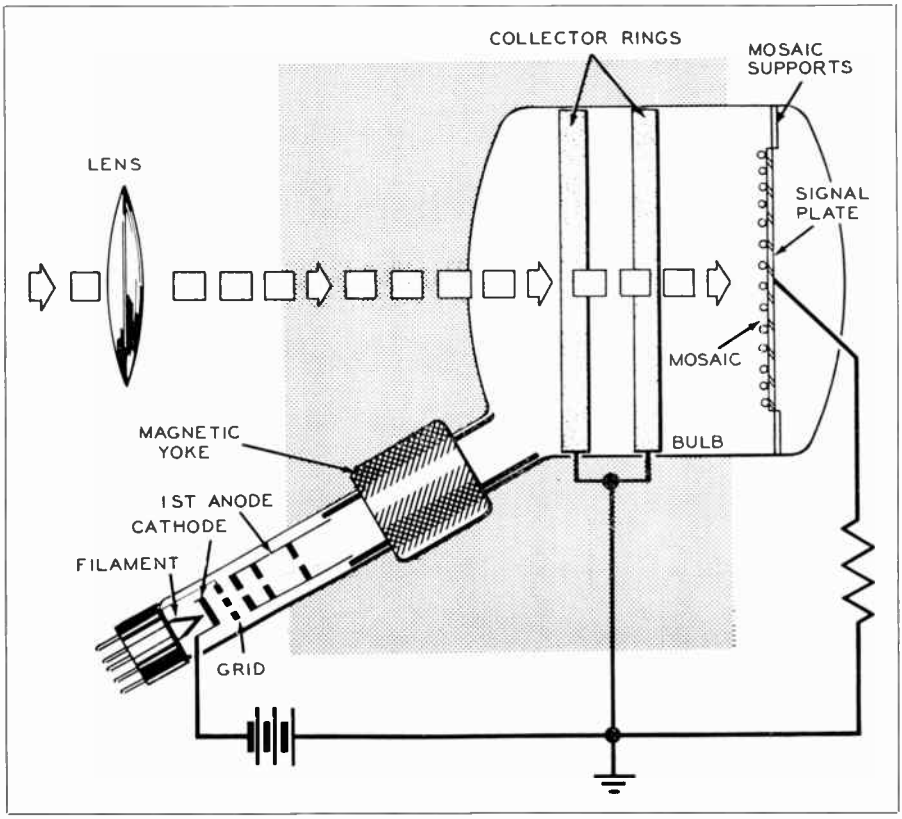

Figure 1.2B. Basic diagram of RCA Iconoscope.

from each other. The globules are made photoelectrically sensitive by a slightly oxidized surface covered with a very thin layer of metallic cesium. The reverse side of the mica sheet is covered with a conductive coating. This is known as the "signal plate" and is provided with an external connection to couple the signal to the video preamplifier. The mosaic, in conjunction with this metallic backplate, may be considered as being thousands of tiny capacitors, each of which assumes a charge proportional to the amount of light falling upon it. The storage principle of a charged capacitor is used, since each globule holds its charge until discharged by some means.

The globules are discharged in their proper sequence by the tiny beam of electrons from the electron gun. Controlled pulses through the deflecting coils allow the proper "sweep" of the electronic beam across the mosaic. This is the process of "scanning" discussed later. Secondary electrons are removed from the mosaic by the electron beam and are attracted to the collector ring. The ring is connected to the input of the video preamplifier so that the corresponding video signal variations are then amplified.

The *Image Orthicon* tube is the principal type of pickup device used in modern studio and field cameras for "live" TV telecasting. Fig. 1.2C illustrates two such tubes. The larger tube (15 inches long, 3 inches greatest diameter) is of the type used in TV broadcast type cameras. The smaller tube is the "miniature" type used in industrial and "closed circuit" cameras, *not* in broadcasting.

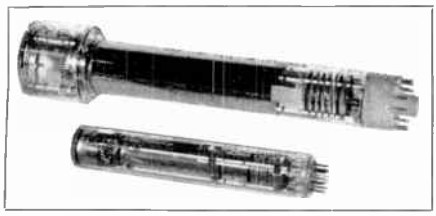

Figure 1.2C. Image Orthicon type pickup tube. Courtesy RCA.

Fig. 1.2D is a simplified schematic diagram of the image orthicon. This device is similar to the iconoscope in only one respect; that is, it operates upon the "storage" principle. The electron beam from the gun is of a "low velocity" type rather than the high velocity operation of the electron beam in the iconoscope. The camera lens focuses the reflected light from the scene onto a photo-sensitive surface which is a translucent photocathode (See Fig. 1.2D). Corresponding photoelectrons are therefore caused to be emitted from the back surface of the element. By "electron-lens" action these emitted photoelectrons cause a synonymous electron image to appear on the face of the target. The target is composed of two elements, a very thin plate glass with a face (toward the front of the tube) of screen wire comprising extremely fine wire mesh. An ordinary pinhead will cover some 7000 of the tiny openings of the screen mesh.

The more light that strikes the photocathode, the more the number of electrons that strike the front of the glass target. Thus at each "light" portion of a scene, electrons strike the glass target and cause secondary electrons to be emitted which are collected by the screen mesh and passed off to ground. The corresponding deficiency of electrons at that point on the target causes a positive charge at that point. Therefore, electrons on the back side of the glass will leak through to the front at that point, which now leaves the back side positively charged at that point of the surface.

The scanning beam from the electron gun is obviously "aimed" at this back side of the target glass. As the beam sweeps across the target, points which still possess a negative charge (black portions of the scene) will repel the electron beam and cause all of the emitted electrons from the gun to return in the form of a "return beam." (See Fig. 1.2D). However, when the beam is in the vicinity of a positive charge on the target ("light" portion of a scene) some of the electrons are "robbed" from the beam to neutralize the positive charge at that point.

Therefore, it may be observed that the return beam constitutes a varying signal which corresponds to the light content of that point of the scanned image on the target. This is the video signal. This signal is then passed through a five stage multiplier for amplification.

Obviously only the very basic characteristics of pickup tubes have been discussed in this chapter. They may be summed up as follows:

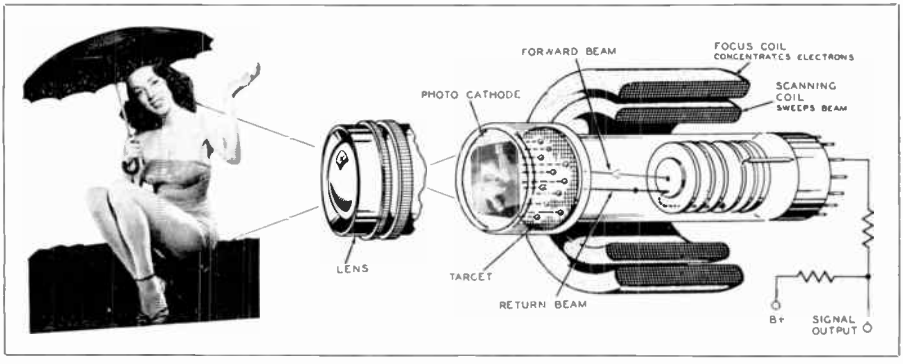

Figure 1.2D. Fundamental action of Image Orthicon tube. Photo Courtesy NBC.

The pickup tube is a video transducer, converting the varying light intensities of points of a scene into corresponding electrical impulses. The pickup head is said to be an optical-video transducer.

The iconoscope was the first practical all-electronic video transducer. It was originally used for "live" pickups as well as film by using extremely brilliant lighting systems. Due to its comparatively low sensitivity, it is now used mainly for film and slides. Video-transduction is accomplished by the "storage" principle in which tiny capacitors on the mosaic are charged an amount depending upon the reflected light at that point. When the scanning beam snaps across the mosaic, secondary electrons are emitted which alter the charge on the capacitor. The "modulated" stream of secondary electrons are attracted to a positively charged collector ring, flow through a load resistor, and the corresponding voltage variations are passed on to the video preamplifier.

Due to certain spurious signals generated in the iconoscope, correction signals known as "shading" signals must be used as described in detail in Chapter 2.

The image orthicon is a supersensitive video-transducer approaching the human eye in sensitivity. It is now used almost exclusively in studio and field pickup heads. It consists of three basic sections, the image section, the scanning section, and the electron multiplier section. In the image section, any optical image focused upon the photocathode causes it to emit electrons which are accelerated through a mesh screen in front of a glass "target." At points on the target where electrons strike, secondary electrons are knocked loose to be collected by the wire screen and passed to ground. This leaves the corresponding point on the target positively charged. The scanning beam will be repelled from the negative portion of the target, and return in entirety to the electron multiplier. At the positive points, however, a number of electrons (depending upon amount of positive charge) will be extracted from the electron beam, and the return beam will be less by an amount equal to those electrons extracted. This "modulated" beam is passed through a five stage electron multiplier, thence to the load resistor, across which is the input to the video preamplifier.

A close study of this process reveals that the darker portions of the scene result in a greater number of electrons in the return beam, while the lighter the scenic point, the less the number of electrons.

We will go into a detailed analysis of all types of pickup tubes in the next chapter due to the importance to the TV operator of a clear understanding of the operating characteristics of camera tubes.

1.3 *The Viewfinder*

The basic action of the conversion of the light energy in a scene to corresponding electrical impulses comprising the video signal has just been discussed. The question now arises as to the means of ascertaining the scene covered by the camera operator.

There are two general types of viewfinders; optical and electronic.

Optical types are divided into two physical designs. When an iconoscope pickup tube is used, as in televising film or slides, a mirror is so arranged that

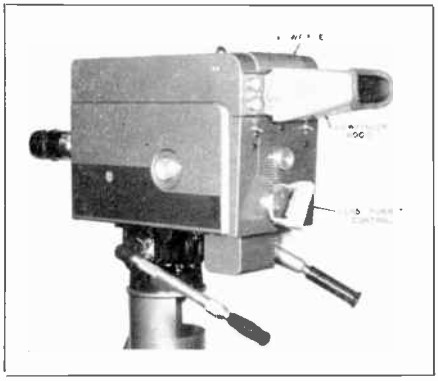

Figure 1.3A. Pickup head with electronic viewfinder mounted on top in normal operating position. Also shown is the lens turret control. This handle is squeezed to release the position lock and turned to position the choice of lens in front of the camera. Courtesy G. E.

the operator may look into the camera and view the image directly on the mosaic of the iconoscope. An optical viewfinder for regular studio and field camera employing the image orthicon uses a lens system which is a duplicate of the tube lens system. The two systems move simultaneously upon adjustment of a common control.

The electronic viewfinder is the most popular for cameras employing the image orthicon tube. It is most commonly mounted on top of the camera as shown in Fig. 1.3A. This viewfinder receives the video signal from the output of the preamplifier in the pickup head, amplifies it and reproduces the image on a cathode ray tube which serves as the viewfinder screen. Obviously the viewfinder circuit must also receive the various control and sweep voltages which are incorporated in the camera circuits.

There are various advantages and disadvantages to either type of viewfinder. The optical type is, of course, simpler to maintain. It may also be used in such a manner that the operator may "see" portions of a scene outside that covered by the camera, so that he knows what a "pan" (Sweeping of camera to right or left) will cover without removing his face from the "hood" of the viewfinder. This is not possible with the electronic type since the reproduced scene is what the camera actually covers as dictated by the output signal from the video preamplifier.

Advantages of the electronic viewfinder are several in number. First, the operator is always provided with sufficient brightness, which is not always the case in optical types. Remember that all pickup tubes have a certain amount of inherent gain whereas optical systems, as a rule, do not. The electronic type also permits the camera operator to know exactly what is going out over the cables to the control room, since he is able to observe loss in detail not only due to any optical misadjustment, but also to any misadjustment or fault in the electronic circuits of the camera.

1.4 *Frequency and Wavelengths*

The velocity of radiant energy (radio waves, light waves, etc.) in air is approximately 186,000 miles per sec. Scientists prefer the metric system of measurement, and 186,000 miles per second becomes 300,000,000 meters per sec.

1 meter = 3.28 ft., 1 meter = 100 centimeters

1 kilometer = 1000 meters

1 centimeter = 1/100 meter

To convert the frequency of a wave to the corresponding wavelength, the following relationships hold:

$$W \text{ (wavelength in meters)} = \frac{300{,}000{,}000}{f \text{ (in cycles per sec.)}}$$

$$\text{or } W = \frac{300{,}000}{f \text{ (in kc)}}$$

$$\text{or } W = \frac{300}{f \text{ (in megacycles)}}$$

In television, the engineer is faced with properties of light. Light is of such high frequencies that wavelengths are measured in units known as *Angstrom Units:*

Nature of Light Waves	Wavelength Limits in Centimeters		Frequency Limits in Megacycles	
	Max.	Min.	Min.	Max.
Infrared	0.1	0.00008	300,000	375,000,000
Visible	0.00008	0.000038	375,000,000	790,000,000
Ultra Vialet	0.000038	0.0000012	790,000,000	22,500,000,000

Table 1.4A

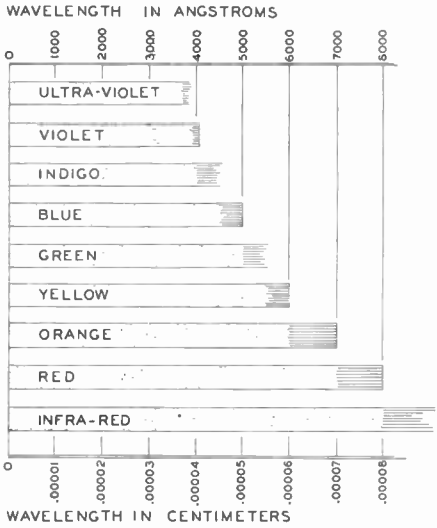

Figure 1.4B.

1.0 Angstrom = 0.00000001 or 10^{-8} centimeters. (cm)
= 0.0000001 or 10^{-7} millimeters (mm)
= 0.0001 micron (μ)
= 0.1 Millimicron (mμ)

The visible light spectrum, as measured in Angstron units covers the range of 3800 to 8000 A (380 to 800 millimicrons). In order to get a comparable idea of the wavelength and frequency ranges of the light spectrum, study Table 1.4 A. It is observed that the longest visible wavelength (red) is approximately 0.00008 centimeters long, corresponding to a frequency of 375,000,000 megacycles. The shortest visible wavelength (violet) is between 0.000038 and .00004 cm; a frequency of 790,000,000 megacycles. The convenience of using Angstrom units as a measurement of length may be seen here, since:

1 Angstrom unit = 10^{-8} centimeters
0.000038 cm. (shortest visible wavelength) = 3800 Angstrom units and
0.00008 cm. (longest visible wavelength) = 8000 Angstrom units.

A breakdown of the visible light spectrum is shown in Fig. 1.4B.

1.5 *The Scanning Signal*

From the content of section 1.2, the reader is aware that a means must be incorporated in the pickup head to "pick-off" the image in the tube point-by-point, and relay it to the series of video amplifiers in the form of an electrical impulse corresponding to the image at that point.

The electronic beam from the electron gun in the tube is first focused into a very narrow beam, then is caused to sweep back and forth across the image of the *mosaic* or *target* at a definite time interval and sequence. Such functioning of the electron beam is called the *scanning* process.

The beam is focused by a magnetic "focusing" coil which creates a magnetic cross-field narrowing the emitted electrons into an electronic beam of constant diameter. This cross-section of the electron beam is termed the *scanning aperture*, probably a carry-over from the old days of revolving mechanical discs with small holes which traversed the projected area of the scene.

The beam is caused to scan the image by horizontal (H) and vertical (V) magnetic deflection coils constituting a *yoke* around the neck of the pickup tube.

The H and V deflecting coils are provided with *saw-tooth* current waves which deflect the electronic beam electromagnetically.

Before describing the fundamentals of the scanning action, it may be well here to orient the "directions of scan" to prevent any confusion in the future discussions. It should be recalled that the lens system of the camera inverts the image on the photosensitive surface of the pickup tube; that is, the picture is upside down. Refer now to Fig. 1.5A. If the pickup tube is an iconoscope, the "top" of the image itself is on the bottom of the mosaic. Therefore, if we consider the scanning process to sweep the mosaic from the top left of the picture to the lower right (just as you are reading this page of print), the scanning beam, as shown, must start at the *lower left* of the mosaic. The beam then moves to the right until it reaches the edge of the

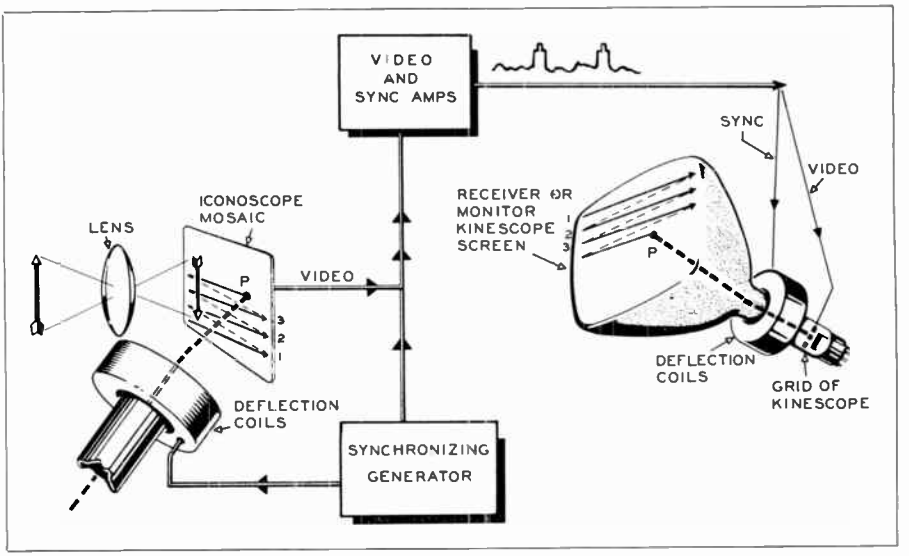

Figure 1.5A. The lens at the camera inverts the image. Therefore, the actual scan at the camera starts at lower left bottom, which is actually upper left top of the image. Throughout this text the scan is said to start at upper left top, which refers to the picture itself rather than the relative position of the scanned area.

mosaic, then retraces to the left to start the next line scan. How this compares to the receiver kinescope scan is also shown in the Fig. 1.5A. This should cause no confusion to the reader, since throughout the text when the scanning is said to sweep from top left to lower right, *we are referring to the picture* itself. There should be no confusion then as to why the picture is not transmitted "upside down" because of the lens action.

As will be discussed later in this chapter, when the iconoscope is used in televising motion picture film, the image is projected directly onto the mosaic by the projector lens of the film projector. In this case, the image is right-side up on the mosaic. Direction of scan is easily adjusted at the sweep coils by "reversing the leads" from the deflection source, rotation of the yoke, or adjustment of direction of sweep currents. This is detailed in Chapter 6. The point to remember is this: the image is said to be scanned from upper left to lower right, which means that *if you were looking directly at the scene in person, you would visualize the scene as being scanned from upper left to lower right.*

The H and V *driving pulses* (synchronizing or timing pulses) are generated in the control room in a part of the main synchronizing generator. They are then fed into individual camera control units in the video control room, which in turn are connected to their respective studio cameras via coaxial cables. Fig. 1.5B illustrates a block diagram of the scanning process. The *saw-tooth* scanning waveform generator is generally in the studio camera pickup head, and is "triggered" in operation by the driving pulses from the studio sync generator.

The question now arises as to why saw-tooth waveforms must be used for the deflecting coils instead of sine-waves. It should be recalled that a sine-wave does not change in amplitude linearly with respect to time; i.e., the slope of the curve is dependent upon the angle with respect to the X (time) axis. This would cause the scanning spot (aperture) to move across the image with irregular velocity, causing irregular brightness across the reproduced picture.

A saw-tooth wave is illustrated in Fig. 1.5C. Such a wave increases linearly with respect to time (slope of

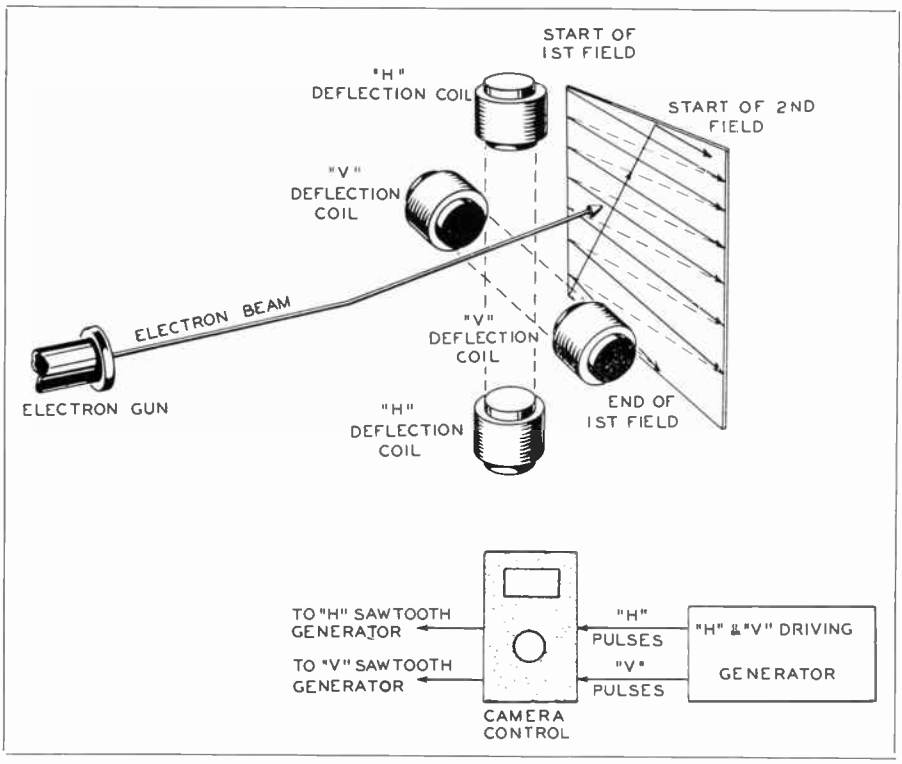

Figure 1.5B.

curve constant), returns quickly to the "X" axis, then the wave is repeated. Such a current waveform through the H and V deflection coils in the yoke about the camera pickup tube will cause the scanning spot to move at constant velocity across the scanned surface.

Fig. 1.5B shows the basic principles of the *odd-line, interlaced* scanning system which is standard for modern TV broadcasting. Odd-line scanning means that the total number of scanned lines is an odd number. It may be seen from Fig. 1.5B that this method of scanning allows the spot to return to the top of the surface to start scanning the second field at exactly the same *height* that it was when it started scanning the first field. Fig. 1.5D illustrates the basics of the action of the "H" and "V" sawtooth currents on the scanning process.

Consider now what would happen if an even number of lines were scanned. Fig. 1.5E shows 6 lines of scanning. It is noted here that alternate fields must be displaced *vertically* by one-half line with respect to each other. Thus the perfectly uniform vertical scanning period of the odd-line system could not be used, and would require more complicated scanning and synchronizing circuits.

The question now arises as to why "interlaced" scanning is used instead of allowing the spot to scan each successive line in turn. In the interlaced scan system, the scanning spot moves horizontally across alternate lines of the entire frame during one downward sweep, then returns to the top and scans the remaining lines during the next vertical sweep. Each one of these processes is termed a *field*, and two fields constitute one complete *frame*. The reason for the choice of interlacing lies mainly in the fact that such a process conserves bandwidth without sacrificing freedom from flicker.

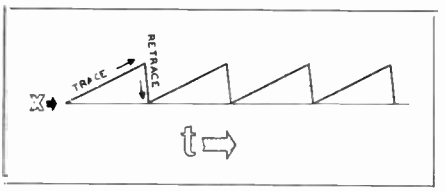

Figure 1.5C. Saw tooth waveform.

This will be made clearer if we go back to fundamentals of the motion picture. When a number of still pictures is flashed in rapid succession on the screen, the sense of movement is imparted when each successive picture is slightly displaced in position from the preceding one. This uses the ability of the eye to retain for a split second the visual impression of a scene after the original stimulus is removed. This is termed "persistance of vision." In the old movies (often referred to as "flickers") the 24 frames of the film were flashed upon the screen in one second. The flicker was very noticeable in these early movies. It was then discovered that if each frame was flashed upon the screen twice instead of once, the flicker disappeared. Thus, although the frame frequency is still actually only 24 per second, the *picture rate* is 48 per second.

This led to a basic law relating to the properties of flickers. The sensation of flicker of a reproduced image in motion is related to the *frequency of illumination* of the entire scene. A close study of interlaced scanning reveals that this principle is used to reduce the sensation of flicker for a given bandwidth of frequencies. If, for example, sequential scanning were used, "field" and "frame" would be one and the same. Frame repetition rates of 30 per second, if scanned (illuminated) only once in the frame time, produce noticeable flicker. The picture rate must be 60 per second, and if sequential scanning were used, all of the scanning lines must be traversed in 1/60 of a second. In the interlaced system, only half of the scanning lines are traversed in the same period, and the horizontal velocity of the scanning aperture is one-half that in the sequential system. Thus the signal frequencies making up the radiated TV composite waveform are reduced by the same factor.

Interlaced scanning therefore allows 30 frames per second to be scanned at *twice* this rate. Field frequency of 60 per second is easily synchronized by the 60 cycle power lines standard in the United States. The total number of lines constituting a frame is 525, thus 262.5 lines are scanned for each field. Since there are 30 complete frames per second, the number of horizontal lines per second is:

$H = 525 \times 30 = 15{,}750$ lines per second.

Thus we may set up our standards as follows:

Horizontal Line Frequency = 15,750 per second.

Vertical Field Frequency = 60 per second.

Vertical Frame Frequency = 30 per second.

Time of One Complete Line = 1/15,750 = 63.5 microseconds.

At the end of each line the aperture moves back to the left to start the scan of the next alternate line. This time is called the *retrace* or *fly-back* period. It

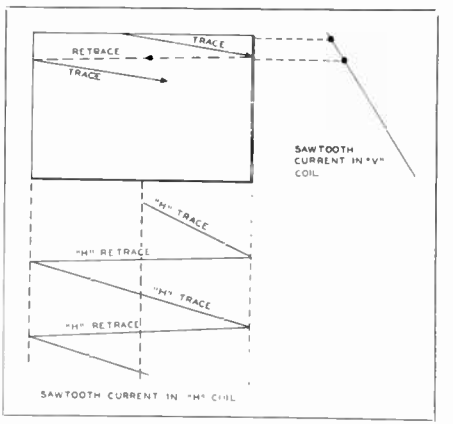

Figure 1.5D. Current in the horizontal (H) deflection coil causes the electron beam to deflect from left to right, then rapidly retrace as shown. The start of the second line will be lower from the top of the raster as shown because of the saw-tooth current in the vertical (V) coil, which is lower in value as shown. The frequency of the H trace is 15,750 cps; the frequency of the V trace is 60 cps.

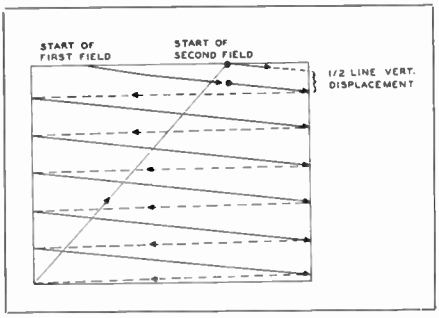

Figure 1.5E. Necessary scanning pattern if "even line" interlaced scanning were used. In this case, the ½ line difference would necessarily accur vertically, complicating the design and adjustment of sweep circuits.

is very rapid in action, being equivalent to the steep slope of the curve of Fig. 1.5C where it returns to the time axis.

Within the camera pickup head designed for studio operation, are located the H and V sawtooth generators. Such waveform generators are of the "driven" type, which means that their operation is controlled by a synchronizing or triggering impulses. By this means, the scanning is controlled by the main sync generator which must coordinate the entire TV system in relation to time.

The complete fundamental requirements of the scanning system may be outlined as follows: the electron in motion carries with it a minute magnetic field existing at right angles to the direction of electron motion. Therefore the electron can be influenced by an external magnetic field by the linking (either aiding or opposing) of the two magnetic fields of force. Thus the entire beam of electrons may be caused to deflect by magnetic coils carrying a current.

Examine again Fig. 1.5B. The beam of electrons from the "electron gun" must be caused to travel from left to right across the area to be scanned (looking toward the picture area). Also a sufficient downward slope is provided so that the retrace to the left side is spaced a width of one line below the previous one. (See Fig. 1.5D). This process of *alternate line* scanning is carried on at a linear time rate to the bottom of that field (262.5 lines), where it is returned to the top of the area to start the scan of the next field. The "next field' means that the aperture is caused to continue its horizontal and downward trace, this time falling in the spaces left blank (unscanned) on the preceding field scan. At the end of this second field (525 lines, one frame), the aperture is returned to the position at the top of the scanned area where the first field started.

It may now be pointed out that the driving pulses supplied to the saw-tooth generator circuits are also "blanking" pulses. This term *should not be confused* with the blanking (pedestal) signal transmitted with the composite video signal to operate the receiving tube kinescope (described in section on Sync Generator to follow). For this reason, it is better for the beginner to term the camera signals received from the sync generator the *driving pulses*, although they are often termed *camera blanking* in technical literature. When the saw tooth generator is "blocked" (no driving pulse received), the capacitor across which the saw tooth wave is formed receives its long charge interval from the B plus supply. This is the "trace" portion of the sawtooth. When the negative driving pulse is received, this capacitor is rapidly discharged, returning the trace (return trace) which occupies considerably less time than the full line scan. The same H and V pulses are applied to a "blanking pulse" generator in most cameras, which drive the target into the "black" region so that this retrace is not visible. The vertical driving pulse is broader in width (longer time duration) than the horizontal driving pulse, since a slightly longer interval is required to return the scanning beam from the bottom to top of the area. The mechanics of scanning and blanking are presented in greater detail in Chapter 2.

1.6 The Video Preamplifier

The video signal from the iconoscope (in the film camera) or the more sensitive image orthicon (in the studio camera) is of very low level and should pref-

erably be raised in amplitude before transmission via coaxial cable to the control room units. This is necessary to meet maximum signal to noise ratio practice in modern TV systems.

The video preamplifier is located in the camera pickup head, and receives the signal from the pickup tube load resistor. The voltage at the output of an iconoscope tube averages approximately 0.01 volt. An iconoscope preamp raises this level of the video signal to at least 0.1 volt before transmission to the control room units. Studio pickup tubes of the image orthicon type range in video output current from 3 to 30 microamperes through a load resistor of 20,000 ohms. This gives a range of 0.06 to 0.6 volts of video signal which is coupled to the first stage of the preamplifier, allowing excellent signal to noise ratio to be achieved in practice.

A video amplifier is a resistance-capacity (RC) coupled amplifier similar to the type employed in regular high fidelity audio circuits. The major difference in the video circuit is the greatly extended band of frequencies it must amplify. This range must include frequencies from 20 cps to at least 5 megacycles for adequate band amplification in the TV system.

Due to shunt wiring capacities, and dynamic input and output capacitances of tubes, special high frequency compensating networks must be used for higher efficiency of amplification at high frequencies. In the design of such amplifiers, vacuum tubes of low interelectrode capacitances are specified, usually of the pentode type. In construction, extreme care is exercised in circuit wiring and layout.

The compensating networks use what is known as a "peaking coil." The circuit is one of three designs: series-peaking, shunt-peaking, or a combination shunt-series peaking arrangement. These are discussed in Chapter 2.

The output of the video preamp is a *cathode-follower* circuit which feeds the coaxial line to the camera control unit in the control room. In fact, nearly all coupling in the video amplifier chain is accomplished by the cathode follower. The need for such type of output circuits is dictated by the nature of the video pass band of frequencies. The output of the conventional plate-loaded amplifier stage is of a fairly high impedance. Since coupling must be made by coaxial cables in TV systems for efficient transfer of energy, the high impedance must be transformed to a low value practical for coaxial line construction. Construction of a transformer having bandpass characteristics well over 4 megacycles broad is highly impractical. Thus the use of the cathode-follower type of output circuit is mandatory.

Fig. 1.6A illustrates the basic circuit of a cathode follower. The "follower" term springs from the fact that the video voltage in the cathode resistor R_k "follows" the grid input voltage in R_g and is therefore of the same polarity. The output impedance is low, conveniently matching a coaxial cable impedance, (RTMA standard 75 ohm), while maintaining a high input impedance to the stage. This system has wide bandpass characteristics with negligible frequency and phase distortion. The gain of this type of circuit however, is *less* than unity.

Video amplifiers may be generalized as follows:

1. Tubes of high values of transconductance are used, with low input and output capacitances.

2. The plate load impedance is of relatively low value (compared to orthodox audio amplifiers) to achieve flat response over a broad band, known as the passband. The passband should be at least

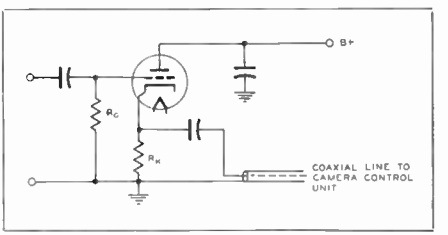

Figure 1.6A. Basic cathode-follower type output circuit of video preamp.

20 cps to well over 4 megacycles per second.

3. High frequency compensation is used in the form of series, shunt, or combination series-shunt peaking circuits.

4. Low frequency compensation is used in the form of an RC network.

5. Electrolytic bypass capacitors in video amplifiers are commonly shunted with a small paper or mica capicator. The operator should realize that electrolytics tend to become inductive at higher frequencies in the passbands. The small capacitor bypasses this effective inductance.

6. The output stage which couples to the coaxial transmission line for distribution is generally of the cathode-follower type.

7. Good low frequency response is important in resolving the general background or "vertical" contrast, since field and frame frequencies constitute the lower frequencies in the passband. Loss of low frequency response is apparent when large portions of the picture of the same relative brightness (or darkness) tend to become gradually "shaded." This will also result in bright streaks along the trailing edges of a large, dark object.

8. Good high frequency response is important for good resolution of fine details in the horizontal line structure of the picture, since the higher frequencies in the pass band are functions of multiples of the line frequency. (15,750 cps, or 63.5 microseconds for each line.) Loss of the higher frequencies results in less detail of fine lines in small elements of the picture.

1.7 The Camera Control and Monitor Unit

The output of the camera pre-amplifier located in the camera pickup head is connected by coaxial cable to an individual camera control unit in the control room. Fig. 1.7A illustrates one type of arrangement using four camera control units to accommodate four studio cameras. The fifth unit to the far right is the mixer control unit described in section 1.8 to follow. One of the units in the illustration could be a film camera control and one an "on-the-air" monitor. In this case, the setup would accommodate two studio cameras and a film or slide camera. The camera control units illustrated each incorporate a ten inch picture monitor with a five inch waveform monitor below. Portable types of

Figure 1.7A. Courtesy RCA.

camera control units generally use a 7 inch picture monitor and 3 inch waveform monitor. Such equipment is used often in regular TV studio operation, particularly in the smaller stations.

The picture monitor shows the picture output of the camera. A control amplifier chassis in the lower compartment of each unit contains the intermediate video amplifier, with facilities for mixing in the kinescope blanking (pedestal) signals from the studio synchronizing generator. The sync pulses may also be inserted here when only *one* camera is used and no switching is necessary. When *more than one* camera or signal source is involved, requiring mixing or switching, the sync pulses are inserted *after* the switching amplifier. The reasons for this are discussed more fully in other sections.

Controls on a camera control and monitor unit enable the studio operator to control the camera tube beam current, target voltage, image focus and orthicon focus. Details of such controls are fully covered in Chapter 3.

On the monitor panel are located adjustments for the kinescope focus and brightness (this applies to the monitoring kinescope, or picture monitor), an oscilloscope (waveform monitor) focus and brightness, and a switch to accommodate monitoring either the line waveform (horizontal), or field waveform (vertical) on the oscilloscope tube. Knobs on the same panel facilitate adjustment of the video gain and blanking (pedestal) amplitude. Constant brightness level is maintained by the operator through observing and correcting the video waveform on the oscilloscope in conjunction with the picture monitor.

Electrical connections to a camera control unit are made by means of coaxial line plug-in connectors. These connections supply the signal from the camera, blanking and driving pulses from the sync generator, driving pulses to the camera, picture output signal from the video amplifier, and power from the regulated power supplies.

The camera control operator is seated directly in front of the control consoles, and usually handles two such control units. If, for example, four video sources are being used, two operators are usually required for the four control units. Only one of the signals will ordinarily be "on the air" at one time (except when "lap dissolves" are employed), the other units showing the preview of what may be required at any instant by the script of the show. The operator has complete control of the electrical characteristics such as electrical focus, level of brightness and degree of contrast.

1.8 *Mixer Amplifier and Monitor Unit*

The outputs of the camera control units are fed to the mixer amplifier position where the video switching and fading facilities are concentrated. It is here that the particular camera output desired to be transmitted is selected.

The switching console is installed either alongside the camera control units as in Fig. 1.7A, or somewhere in visual range of the monitors, so that the switching operator may observe the camera outputs before they are actually switched to the program line.

The RCA Type TS-10A (extreme right Fig. 1.7A) selects any signal from six input circuits, switches or fades any desired signal into the program line, superimposes any two signals, or "lap dissolves" between any two signals.

In the lower cabinet section the high level video amplifier is housed. The synchronizing signals are often inserted at the output side of the amplifier. Sync (to be transmitted with the composite video signal) is never added *before* the switching circuits, since momentary switching operations would allow the receiver to "lose sync" momentarily by the same operation.

The monitor picture tube (kinescope) is fed by means of a switching circuit which enables the operator to observe either of two remote signals (such as network or relay pickups) for preview, or to monitor the signal being sent to the program line which feeds either the master control or transmitter. The very necessary "intercom" switching system is also usually incorporated in this unit.

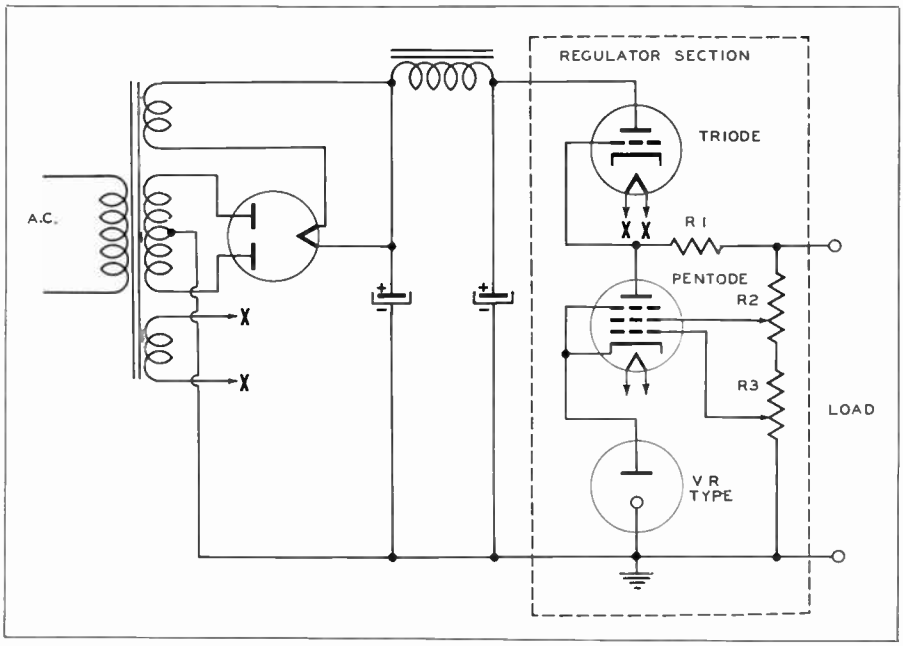

Figure 1.9A. Basic schematic of regulated power supply.

This permits the technical director and program director to converse with all cameramen, microphone boom operators and production personnel.

1.9 Power Supplies

Power supplies for the sync generator, switcher amplifiers, and camera control units are all of the regulated type, with excellent voltage regulation characteristics.

The primary requirement of all such supplies is that sufficient voltage be available to allow losses in the regulating section of the supply, which may be held under close automatic control. Such an arrangement draws upon the "reserve" voltage when the supply voltage tends to lower, and permits greater "loss" in the regulatory circuits when the voltage tends to rise.

The basic type of hookup of a low-voltage regulated supply is illustrated in Fig. 1.9A. Such a supply is very sensitive electronically to very low variations in AC line voltage. The VR gaseous type tube, since it maintains a steady voltage drop across it, stabilizes the cathode of the pentode tube at a specified voltage. The value of R_3 is adjusted so that the pentode grid is negative to the cathode. Thus under stable conditions, a constant current flows through the pentode and R_1 which results in a negative grid bias on the series triode tube. Triodes are invariably used in this position to provide extremely low internal resistance. In most commercial supplies, four to six triodes are used in parallel to adequately carry the load current.

A rise in AC line voltage, resulting in higher DC rectifier voltage, causes more current to flow in R_2 and R_3, with less consequent negative grid bias on the pentode tube. Thus greater current flows through the pentode and its series resistor R_1, increasing the bias on the triode grid. The greater internal resistance (which is in effect, in series with the load) absorbs the increased voltage from the rectifier maintaining the normal voltage applied to the load.

A decrease in line voltage with consequent decrease of rectifier voltage, re-

duces the internal resistance of the triode since the action is reversed from that described above. Thus it is seen that the triode tube electronically controls the voltage applied across the load.

In practice, the low voltage regulated supplies usually provide means of varying the voltage output over a usable range likely to be needed. For example, the RCA Type 580-C has an adjustable output between 260 and 295 volts, with variations of less than 0.25 volts from minimum to maximum load. A switch is provided for switching from a load range of 50-80 MA, and 80-400 MA.

1.10 The Synchronizing Generator

The synchronizing generator supplies the control pulses and sync pulses which co-ordinate the receiver with the transmitter and makes the entire TV system workable.

Such a generator must supply pulses that are precisely timed with relation to each other and accurately controlled as to wave form. Five output signals that are normally supplied by the sync generator are as follows:

1. *Horizontal Driving Signal.* Square wave pulses of short duration at 15,750 cps (horizontal scanning frequency) used to "trigger" the horizontal saw tooth generator in the camera. (Section 1.5.) Thus this control pulse is fed to the pickup head, and *is not a part of the transmitted signal.*

2. *Vertical Driving Signal.* Square wave pulses of somewhat longer duration than above, at 60 cps (vertical scanning frequency) used to trigger the vertical saw tooth generator in the camera. (Section 1.5). These pulses are fed to the pickup head, and *are not a part of the transmitted signal.*

3. *Kinescope Blanking Signals.* Square wave pulses at (a) horizontal scanning frequency (15,750 cps) and (b) vertical scan frequency (60 cps), added to the transmitted video signal for the purpose of blanking out the respective return traces in the receiver picture tube (kinescope). The blanking signal is often referred to as the *pedestal*, upon which the synchronizing signal (see below) is placed. These signals form a part of the *composite transmitted signal.*

4. *Synchronizing Signals.* These signals, also, must be added to the transmitted composite signal, in order to synchronize the scanning action in the receiver with that at the camera. The sync signal is, in itself, a composite signal consisting of (a) horizontal sync pulses of short duration (15,750 cps), and (b) longer duration vertical sync pulses (60 cps) which are "serrated" in form, and (c) a series of six "equalizing" pulses of short duration preceding and succeeding each vertical pulse interval. (a) and (b) above are placed upon their respective H and V pedestals, and (c) is transmitted just before and following the V serrated pulses.

5. *Oscilloscope Driving Signal.* Signals consisting of pulses at one-half the horizontal frequency (7875 cps) and one-half the vertical frequency (30 cps), used to trigger their respective saw tooth generators in the monitoring oscilloscopes which provide "wave-form" monitoring (Section 1.7). Since these signals are one-half the line and frame frequency respectively, the oscilloscope patterns are two lines or two fields in length. This will be expanded more fully in Chapter Three. These signals are *not* transmitted with the composite video signal.

Fig. 1.10A illustrates the line waveform detail. The line waveform in this figure is drawn so that "black level" is on top and "reference white" is on bottom. It should be remembered by the reader, however, that a phase reversal takes place from input to output of each video stage. In practice, therefore, the line waveform polarity on the waveform monitoring oscilloscope will depend upon the stage in which the device is coupled.

Drawing (a) of Fig. 1.10A illustrates the varying signal output as the scanning aperture sweeps across one line of the picture. Drawing (b) is the condition existing when the horizontal driving pulse from the sync generator fires the rapid discharge of the sawtooth generator in the pickup head which thereby "retraces" the scanning beam. This

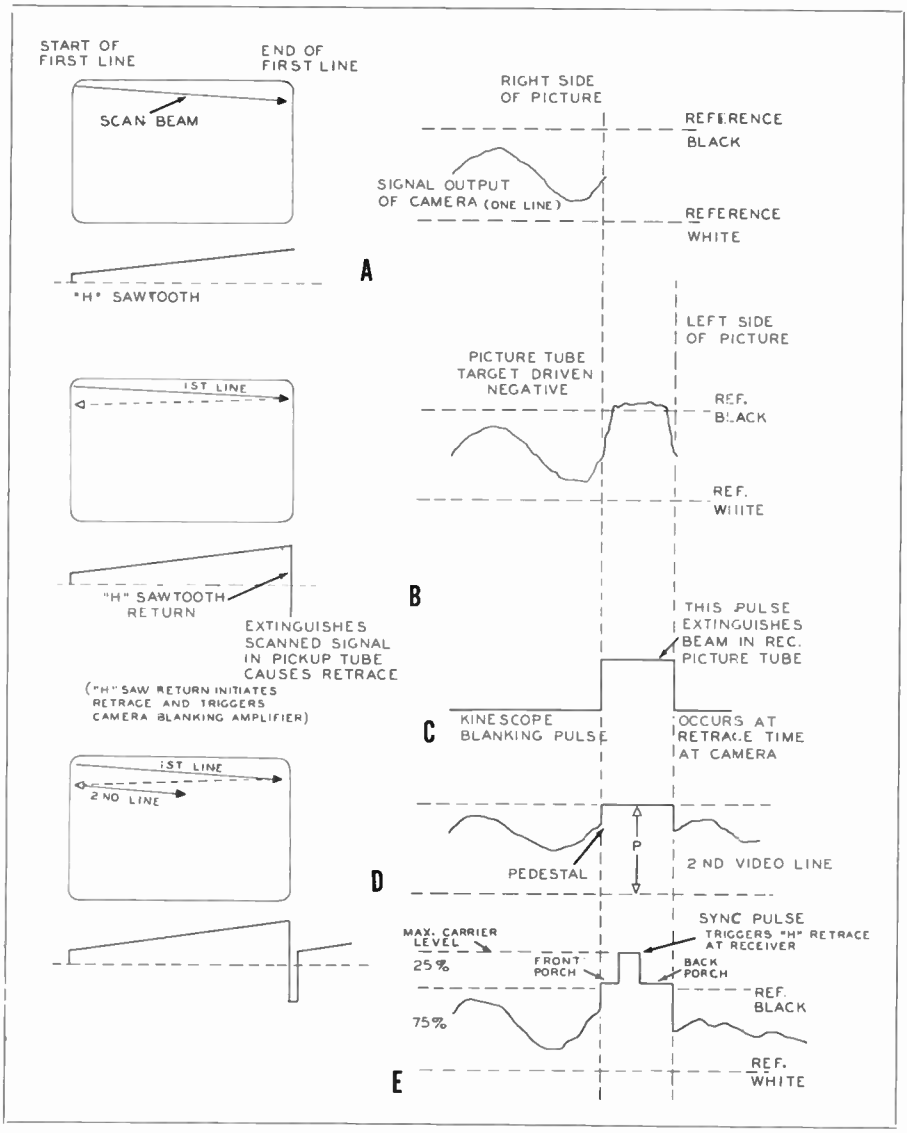

Figure 1.10A. Horizontal line detail.

takes place at the end of each horizontal line, and is the "camera blanking" interval. When image orthicon pickup tubes are used the output signal goes to black level, as shown, by action of the blanking generator in the camera "fired" at the same time as scanning retrace.

It is at this time that the receiving kinescope must be simultaneously "blanked" so that retrace lines of the receiver tube will not be visible in the form of spurious signals containing no picture information. It is here, therefore, that the "kinescope blanking signal," drawing (c), is supplied to the transmitted signal. The resultant combination is shown in drawing (d), and the next alternate line is being scanned

after the blanking interval. It is seen that a "pedestal" takes place at the end of each horizontal line.

Upon the pedestal is constructed the sync signal, drawing (e), which establishes the return sweep of the kinescope scanning beam at the end of each horizontal scan. As shown, all control pulses are in the "blacker-than-black" region. This region constitutes approximately 25% of the composite video signal, and is the amplitude which is greater than the peaks of the blanking signal.

Fig. 1.10B illustrates the basic *vertical* waveform of the TV signal. At the end of the last active horizontal line in a field, a long-duration vertical blanking pulse is applied during the time that the scanning aperture is being returned to the top of the picture to start the next field scan. Upon the vertical blanking pulse (vertical pedestal) are constructed the various pulses illustrated in the drawing.

The vertical blanking pulse blanks the scan aperture for a minimum of three horizontal lines *before* the vertical retrace is started at the bottom of the picture and retains cut-off for a minimum of thirteen horizontal scans. It is during this interval that the scan beam is returned to the top to start the succeeding field.

Duration of pulses in the TV system is related to a symbol "H" to show relative duration of all pulses involved. Present standards establish a 525 lines per frame, 30 frames per second system. Each *horizontal blanking* pulse transmitted has a duration established as H = 0.18 maximum. The frequency of 1 H is:

$$525 \times 30 = 15{,}750 \text{ cps.}$$

and $1\text{ H} = \dfrac{1}{15{,}750} = 63.5$ micro-seconds.

Therefore the duration of *H blanking* = 63.5 × 0.18 or 11.43 micro-seconds. *All durations are related to 1 H, which denotes the interval between successive scanning lines from the leading edge of one horizontal sync pulse to the leading edge of the next pulse.*

Table 1.10C shows the relative durations of all pulses shown in Figs. 1.10A and 1.10B.

The purpose of the equalizing pulses will be taken up first. As shown in section 1.5, TV standards specify interlaced scanning, and the number of lines making up each field is a whole number plus a half, or 262½ lines. The complete definition of such a system is two-to-one odd line interlaced scanning. Only those lines concerned with actual picture information are "active" lines. The retrace periods are "inactive" lines that do not

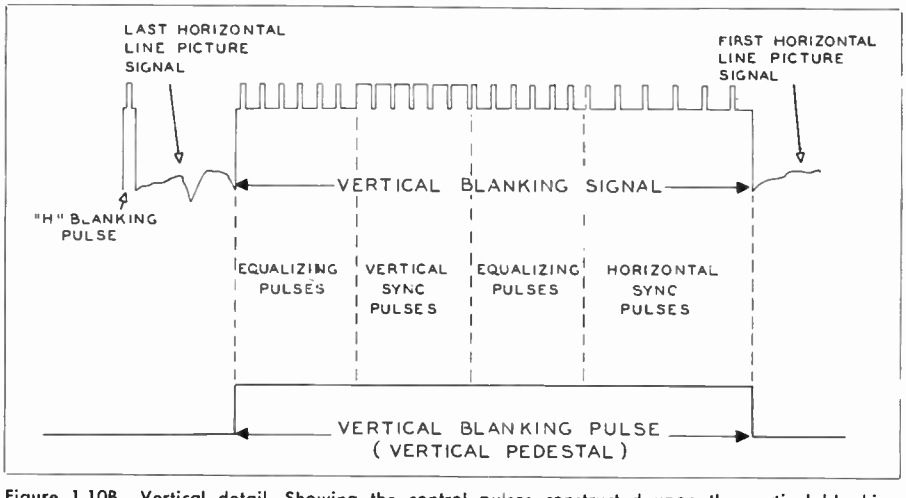

Figure 1.10B. Vertical detail. Showing the control pulses constructed upon the vertical blanking (pedestal) signal.

IDENTITY OF PULSE	Frequency in pulses per second (pps)	Duration at base (H)	Duration in Microseconds
Horizontal Blanking	15,750	0.18	11.43
Horizontal Sync	15,750	0.08	5.08
Equalizing	31,500	0.04	2.54
Vertical Serrations	31,500	0.07	4.44
Vertical Sync	31,500	0.43	27.3
Vertical Blanking	60	13.1 (min.) 21.0 (max.)	833.4 (min.) 1333.3 (max.)

1 H is the duration of one horizontal line, or 63.5 microseconds. Since the horizontal blanking pulse is 0.18H, or 11.43 microseconds, the duration of an active line (containing picture information useful in reproduction) is 63.5 minus 11.43 or approximately 52.1 microseconds. It should also be observed that the vertical blanking is from 13.1 to 21 H, therefore occurs during 13 to 21 horizontal line scans.

Table 1.10C

contain picture information. The 525 lines making up a complete frame contain both the active and inactive lines. It is recalled from section 1.5 that the camera scanning signal is blanked for each horizontal (line) retrace and for each vertical (field) retrace, which comprise the inactive lines. The receiver scan must also be blanked during these periods and sync pulse transmitted which is our concern at the present. When the scanning beam is returned from bottom to top of the raster of the kinescope, the lines of this field must fall directly between the lines of the preceding field. Otherwise the lines would "crowd" each other producing what is known as the *pairing* effect.

Since there is always a difference of one-half line between successive fields, some means must be provided to ensure that the vertical sync pulse will occur at exactly the same instant at the conclusion of each field and at the same level. This is the purpose of the equalizing pulses.

To better understand their function, it is necessary to look briefly into receiver circuit action. A "differentiating" circuit is used in the receiver to respond to the higher frequency components of the control pulses, and therefore selects the horizontal (15,750 cps) frequency to control the horizontal sweep oscillator. An "integrating" circuit, responding to the lower frequency control pulses, selects the vertical (60 cps) pulses to control the vertical sweep oscillator. This is illustrated in Fig. 1.10D.

The basic action of this part of the TV receiver will now be described so as to reveal the necessity of equalizing pulses. Sync of H sweep for the receiver is obtained across R_1 in the differentiating circuit from the leading edges of the transmitted H sync pulses. The time constant of R_1 C_1 is made short in ratio to the duration of the H sync pulses, and capacitor C_1 therefore charges very rapidly when the pulse voltage is applied. The voltage across R_1 also rises rapidly at this time toward the maximum amplitude of the H pulse. Since the capacitor charges very rapidly it quickly reaches the peak charge and the charging current falls to zero, hence the voltage across the resistor also quickly falls to zero. This maximum charge upon C_1 corresponds to minimum voltage across R_1, and when the capacitor discharges through the resistance upon removal of the H pulse, a voltage of opposite polarity is built up through R_1. The resulting voltage curve across the resistance is shown in Fig. 1.10D. This spiked voltage is used to drive the horizontal sweep multivibrator for the picture tube.

The integrating circuit R_2 C_2 has a

time constant very long in ratio to the serrated V pulses of Fig. 1.10B. Therefore the integrating capacitor will become charged only in steps during the V pulses, losing a slight amount of charge as shown in Fig. 1.10D during the intervals caused by the serrations. Thus during the block of vertical sync pulses, an appreciable charge is built up across C_2. Since this action is occurring during the V retrace period, this charge upon the capacitor is built up in six steps (corresponding to the six serrated V sync pulses) at a rate of 60 times per second, or the field frequency. When the integrating capacitor reaches the proper potential, it is sufficient to trigger the V sweep oscillator in the receiver.

It may now be seen that some means must be provided so that the V sweep oscillator is fired at the same instant and at the same amplitude at the conclusion of each field. Should the V sweep be instigated a fraction of a second earlier or later at the end of each field than it is at the end of each frame, the interlacing effect would be destroyed. The phenomena of unevenly spaced lines is known as *pairing*, and results in an inferior picture with poor resolution. The equalizing pulses provide this means. Assume for the present that the *field retrace* (retrace starting from the first field of the complete frame) must start from the lower right-hand corner. If this occurs then the *frame retrace* (retrace starting from the second field) must start from the bottom center, due to the half-line difference. Just before the start of the field retrace, the integrating capacitor C_2 is affected by a full line interim during which it is still discharging from its previous charge, whereas just before the frame retrace an interim of only a half-line occurs. This means that the V sync pulses for the frame retrace would start charging the capacitor C_2 at a slightly higher level than occurred for the field retrace. This of course would cause the V sweep oscillator to be triggered at a slightly quicker time than on the previous field retrace.

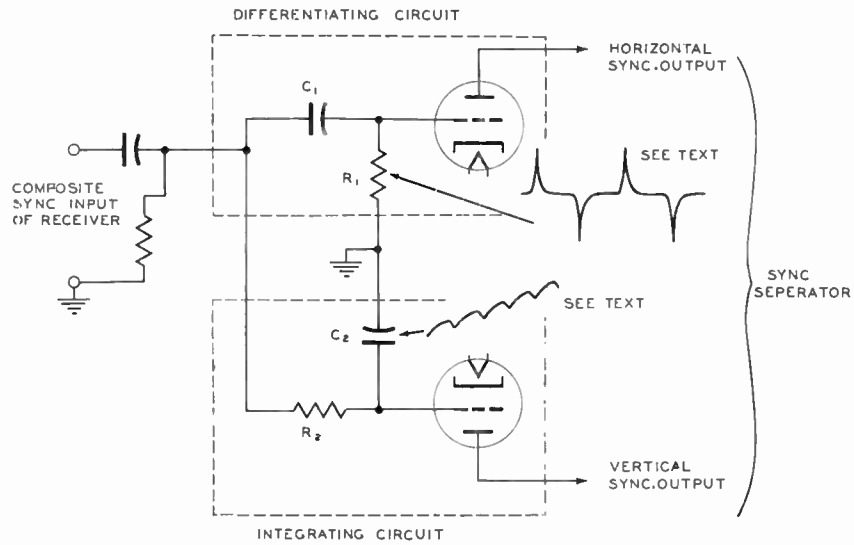

R_1 C_1 comprises a high-pass filter responsive to the horizontal sync pulses (15,750 pps). (Differentiator).

R_2 C_2 comprises a low-pass filter responsive to the vertical sync pulses (60 pps). (Integrator).

Figure 1.10D.

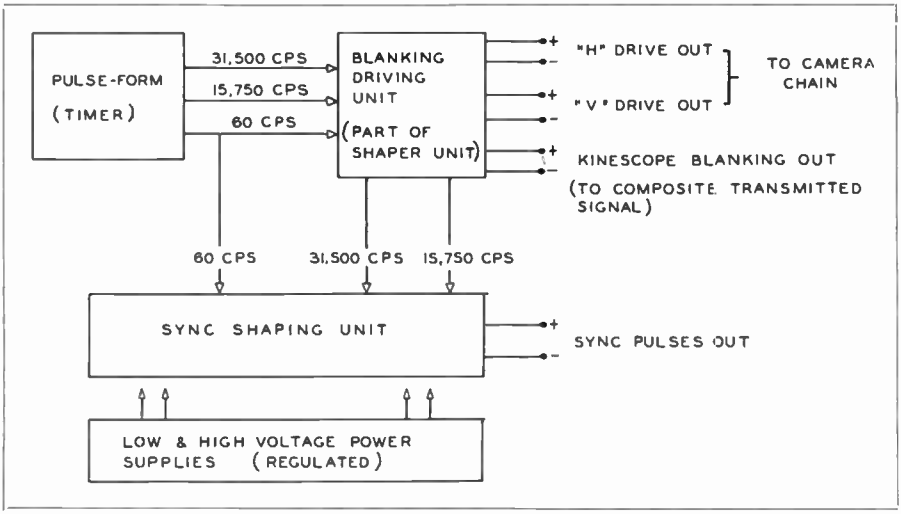

Figure 1.10E. Simplified block diagram of typical sync generator.

The inserted equalizing pulses prevent this uneven timing for firing the V sweep oscillators in the receiver by the following action: their short duration, long spaced intervals just prior to the V sync pulses (which are of long duration and short spaced) permits only a short charge time but a long discharge time for C_2. Any residual charge over a given value on the capacitor will be drained off during this first train of equalizing pulses. Thus at the time the V sync pulses arrive, the capacitor is brought to a certain predetermined level of charge at which the V sync pulses may begin their charging action. After the V sync pulses have triggered the sweep oscillator, another train of equalizing pulses allow the integrator capacitor to discharge to a predetermined value before the start of the following H scanning intervals. Thus the pulses are said to "equalize" the two sets of alternate fields, hence the name equalizer pulses.

It is noted from Fig. 1.10B that the vertical sync pulse is actually made up of six "serrations." This is necessary since during the comparatively long vertical sync pulse interval, the receiver horizontal sweep oscillator must be maintained constant in synchronization. Therefore the vertical sync pulse is "serrated" at a frequency equal to a half-line (twice line frequency or 31,500 cps), and in a manner such that the vertical pulse wavefront has a slope equal to the rise of a horizontal pulse. Thus in Fig. 1.10D, it may be seen that the differentiating circuit driving the horizontal sweep oscillator will continue to remain in sync horizontally, since *every other vertical serration* fires the horizontal sweep oscillator (Detailed in Chapter 3).

The synchronizing generator consists of three basic units; the regulated voltage supply, the pulse-former (timer) and the pulse shaper. This is illustrated in the simplified block diagram of Fig. 1.10E.

This part of the TV system is a highly complex, precision instrument as to timing of operation and exactness of wave shapes. Only the basic function is described here. Details of theory and commercial equipment are given in Chapter 3.

The pulse-former, or timer section, starts with a master oscillator of 31,500 cps from which all timing pulses are derived. The equalizing pulse frequency is 31,500 cps, the horizontal pulse frequency is 15,750 cps (one-half of 31,500) and the field frequency is 60 cps (derived from a frequency dividing chain which

effectively divides the 31,500 cps master oscillator frequency by 525). These various timing frequencies are fed into the pulse shaping unit.

The pulse-shaping unit must mix these pulses into the desired pattern, and form the resultant patterns into a precise waveshape. That is, they must be broadened or narrowed (for example, the camera driving or blanking pulse is slightly narrower than the kinescope blanking pedestal) and the leading edges must be advanced or retarded to comply with the standard RTMA specifications.

The exact integral relationships upon which the TV system is based may now be seen. A typical sync generator will use four counting circuits, each circuit having a characteristic response count such as 7, 5, 5, and 3 respectively. The combined product of 7 x 5 x 5 x 3 is 525, which is the number of lines (total of active and inactive lines) per frame. The product of the number of lines (525) and the field frequency (60) is 31,500, or the frequency of the master oscillator. A fifth counter circuit, dividing the master oscillator frequency by 2, yields the required line scanning frequency of 15,750 cps. Such a system is easily synchronized with the 60 cps power line which is standard in the United States.

The outputs of the sync generator usually feed into a "pulse-distribution" panel which routes the various pulses to the camera chain, main channel amplifier, etc.

The sync generator is analyzed in greater detail in Chapter 3.

1.11 Telecasting Motion Picture Film

The use of film in TV programming may be compared to the use of transcriptions and recordings in AM-FM stations. Considerable percentage of broadcast time is occupied by film programs in TV schedules. Equipment closely allied to filming is that which enables "slides" to be used, such as station identification cards, test patterns, commercial slides, etc.

Two sizes of motion picture film, the 35 MM and 16 MM, are popular for TV use. The 35 MM is the size normally used in motion picture houses. The 16 MM is popular for home use as is the 8 MM. The latter size is not practical for use in TV systems at the present stage of development.

The TV film projector itself is very similar to that used for theater projection, the basic difference being in the lens system and the means used to correlate the frame rate of 24 per second to the TV standards of 30 per second. The projection lens focuses the image upon the pickup tube in a second unit known as the film camera. The RCA Film Projector and Film Camera are illustrated in the photo of Fig. 1.11A.

There are two basic functions of any film projector. One is to project the image upon a screen or pickup tube. The other is to convert the lines of the sound track to corresponding audio signals for the aural system of the camera chain.

Standard motion picture frames are projected at a rate of 24 per second, and interrupted by shutter action to flash each frame twice upon the screen, resulting in 48 separate projected images per second. (Section 1.5.) Since the standard TV system in the United States is 30 frames and 60 fields per second (Sections 1.5 and 1.10) some means must be used to reconcile the difference in repetition rates.

The underlying problem here is that the illumination of the film must be timed to synchronize with the TV sync generator. There are two general methods in use:

a. mechanical rotating shutter which interrupts the continuous light sources of the projection lamp; and

b. illumination of the film from a light source pulsed in time by the sync generator.

Before going further, it is helpful to compare the function of the shutter in a standard motion picture projector with TV system function. The projector shutter serves to blank out the picture during the "pulldown time" of the film. In other words it should be realized that the image portion of a film is *not* rolled steadily over the aperture, but is pulled down a single frame at a time by a

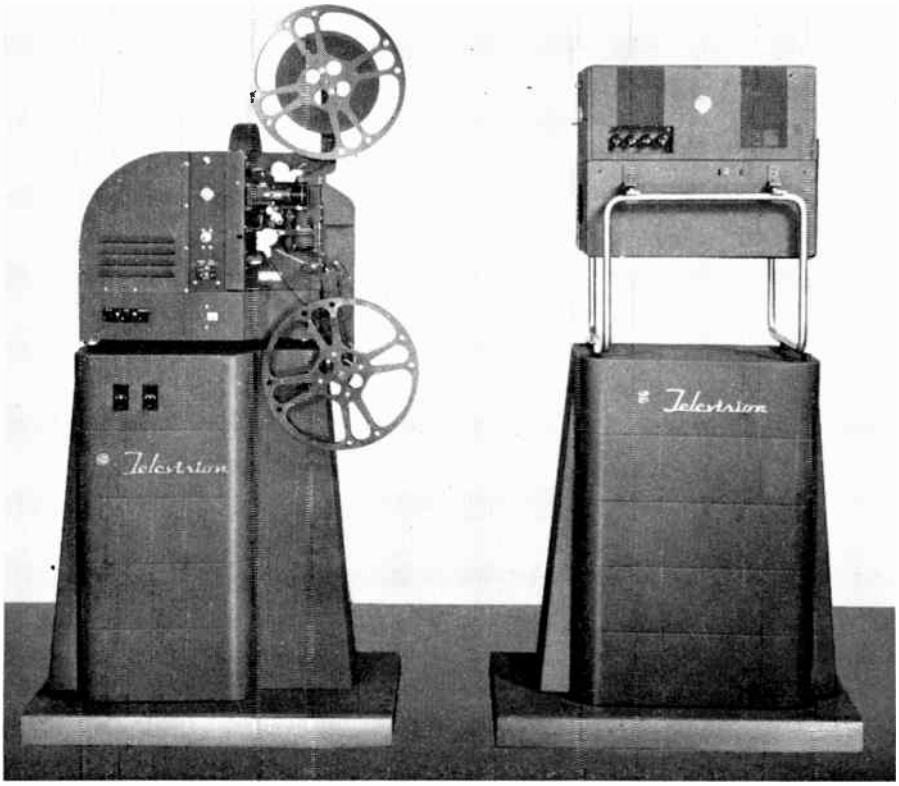

Figure 1.11A. TP-16A film projector and TK-20A film camera. Courtesy RCA.

sprocket arrangement at one frame each 1/24 second. This corresponds to the vertical blanking signal in the TV system during retrace. The projector shutter also is arranged to project two flashes of the same image (frame) to eliminate the flicker effect. This corresponds to the *interlaced* 30 frames, or 60 fields per second (Sec. 1.5), of the TV system.

It now remains to make the two systems compatible for TV transmission. Therefore, instead of flashing each frame twice which results in 48 projected images per second, one frame is flashed on the pickup tube twice, the next frame is flashed 3 times, the next twice, the next three times, etc. This is known as the 2-3-2-3 scanning sequence for TV motion picture telecasting. The average rate of scanning per frame is therefore 2½ times. Since the 24 frames per second are scanned an average of 2½ times,

$24 \times 2.5 = 60$ scanned fields per second.

Thus the 24 frame repetition rate of the motion picture projector is converted to the 30 frame standard TV requirement.

This is only a part of the problem, however, of telecasting motion picture film. The vertical *scanning* time of an inerlaced frame (a field) occupies from 92% to 95% of the total field period. The vertical blanking time is about 833⅓ microseconds (section 1.10) or 5% to 8% of the total field interval. Thus, if the film where projected onto the pickup tube during the scanning period, the "pull down" of the film would necessarily have to occur during the vertical blank-

ing period. Such rapid accelerations of a sprocket hole pull-down system is impractical for a film projector (especially true of the 35 MM type), and some other method of scanning must be used. Therefore, in practice, the scanning period is just reversed for film telecasting from that of "live" programs. The film frame is projected onto the pickup tube with high intensity illumination *only during the vertical blanking period.* This means that neither the pickup tube or the receiver kinescope is being scanned when the film frame is projected onto the film camera. The projecter light is then cut off either by a mechanical shutter or strobolite, *and the camera pickup tube is scanned in the absence of any projected image from the film.* This leaves the much longer scanning period of the TV system in which the pull down time occurs for the film projector.

This method, of course, must utilize a "storage type" pickup tube. (Iconoscope or Image Orthicon). The short, high intensity, burst of light through the film frame results in a corresponding charge placed upon the mosaic of the iconoscope. Then, while the projector light is cut off, the mosaic is scanned and the resultant signal is amplified. There is now ample time for the film pull-down without excessive acceleration before the next burst of light.

The vertical blanking pulse occurs every 1/60th of a second. It takes the scanning aperture approximately 1/750th of a second to return to the top from the bottom of the raster. Therefore the burst of light must be somewhat less than 1/750th of a second. In practice, this flash of light is made 1/1200th of a second. Thus we may see that the film picture is flashed on the mosaic of the pickup tube for only 1/1200th second every 1/60th of a second.

It is well for the beginner to review this section as many times as necessary to gain a mental picture of the fundamentals involved. The subject is elaborated in Chapter 3.

1.12 TV Linking Facilities

Wide band linking facilities are necessary for relaying TV signals from remote points to studio, studio-to-studio

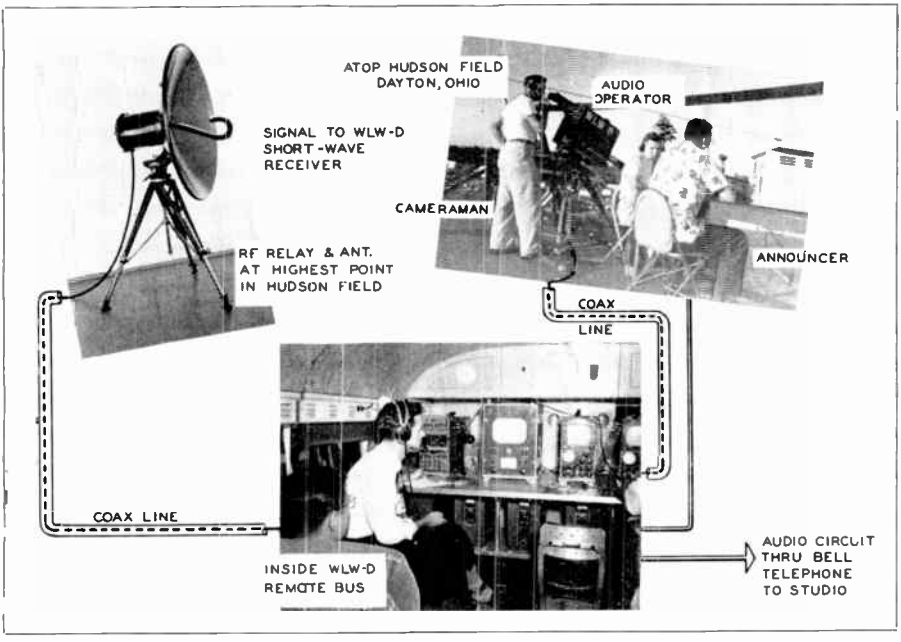

Figure 1.12A. Courtesy WLW-D, Dayton, Ohio.

(network) and studio to transmitter. Such relay is accomplished either by coaxial cable or microwave radio-frequency transmitter-receiver equipment.

Three types of radio-frequency TV auxiliary stations are defined as follows:

1. Television Pickup Station. A mobile station for TV broadcast licensed for transmission (audio and video) of temporary types of programs such as football, spot news events, etc. where coaxial cable service is not practical.

2. Television Intercity Relay Station. A fixed TV station owned either by TV broadcast station licensees or by American Telephone and Telegraph Company to relay TV programs from one station to others as for network broadcasting.

3. Television STL (studio-to-transmitter link) station. A fixed TV station for transmission of program to transmitter location from studio location.

Radio-frequency relay links are, of course, the logical choice for pickup of such remote-control events as baseball and football, where coaxial cable installation for such intermittent and temporary purposes are economically impractical. Fig. 1.12A illustrates the method used at WLW-D for relaying baseball telecasts from Hudson Field in Dayton, Ohio. The cameras are placed atop the grandstand, and relayed to the remote bus located just outside the stadium wall by coaxial cable. Inside the bus are the power supplies, sync generator, camera and mixer controls, and "on-air" monitor, all portable type equipment. The output line amplifier is connected to the RF relay transmitter, which is also atop the grandstand, by coaxial cable. The transmitter is contained in the cylindrical housing attached to the rear of the parabolic reflector. The microwaves antenna is pointed toward the transmitter site in this instance, where line-of-sight transmission may be obtained to the receiver reflector at the transmitter building. The signal from the receiver is then again amplified and fed to the main transmitter.

The terminal equipment for an RF microwave relay receiver is usually a unit known as a *stabilizing amplifier*. Its main purpose is to correct faulty video signals from field pickup equipment and transmission characteristics such as noise, switching surges, improper sync-to-signal ratio, etc. Such a unit includes circuits for separating sync signals, wave shapers, sync insertion circuits and video amplifiers.

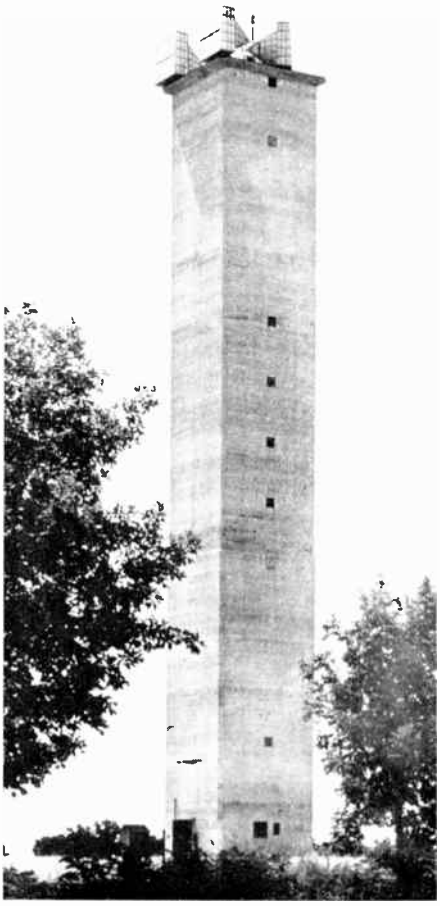

Figure 1.12B. One of the 35 stations on the New York-Chicago radio relay route. This station, located in Indiana, is 190 feet high. Courtesy A. T. & T.

The radio relay system now in use across the country for TV networks interconnection also uses microwave RF links for part of the service. Such relay stations are spaced on an average of 30 miles from each other, depending upon

the terrain. At microwave frequencies, line-of-sight propagation must be maintained for satisfactory service. Such frequencies are focused into a beam much the same way that light is focused into a beam in a searchlight. Because of the tremendous gain of such transmitting and receiving antennas, "flea power" in order of ½ watt is all that is necessary for transmitter output power.

One such installation, as used by the A.T. & T. on the New York-Chicago radio relay route, is shown in Fig. 1.12B. One radio relay, of the type shown, may transmit or receive up to six broad-band channels. Thus only four antennas at each point suffice to handle six broad-band channels in two directions. One transmitting and one receiving antenna are placed side by side facing in one direction, and a similar pair faces in the opposite direction. The receiving antenna feeds the relatively weak microwave signal into an amplifier to compensate for the original transmission loss. The output of this amplifier then feeds the opposite transmitting antenna which sends the signal on to the next relay station. A TV program signal transmitted over such a network from New York to San Francsico will pass through 105 microwave relay stations.

Of special consideration in the efficient maintenance of such a highly important service is the method of quickly determining any faulty cog in the complex system. The repeater stations are normally unattended and automatic in operation. A highly developed control system is therefore used to relay information to special maintenance or alarm centers revealing the operating condition of each individual station. When trouble occurs, both a visual and aural signal is produced at the alarm center. There are 42 different alarm conditions which quickly convey to the maintenance center such exact data as a rectifier failure, an open door, or failure of an aircraft warning tower light.

Network television facilities are, to say the least, amazing in their complex-

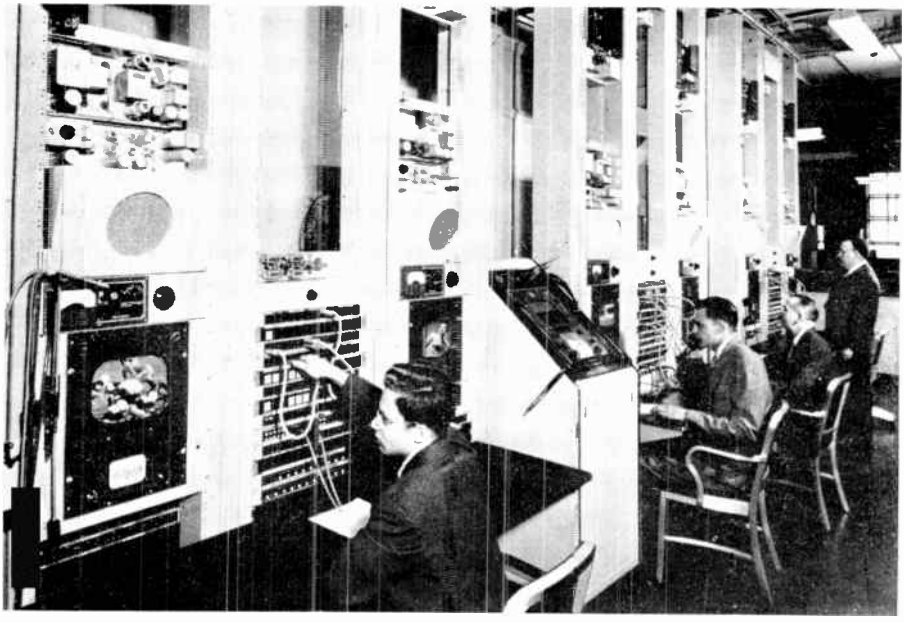

Figure 1.12C. Monitoring positions in the television network control center in the Long Lines Department of the A. T. & T. Company at New York. Video and sound equipment at each position give technicians finger-tip control in testing, maintaining, and switching the network channels. Courtesy A. T. & T.

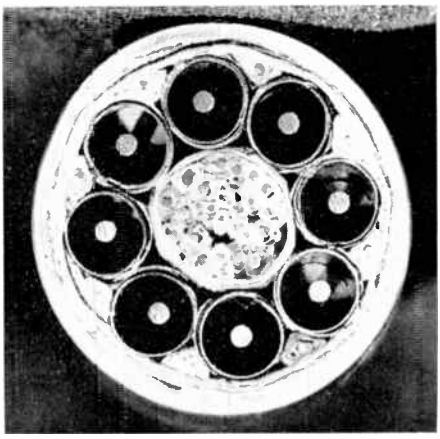

Figure 1.12D. A cross-section of an 8-tube coaxial telephone cable. Each coaxial tube carries high frequency electrical signals which can transmit hundreds of telephone conversations or one television program. (As each coaxial tube only transmits in one direction, two tubes are needed for a telephone conversation.) Courtesy A. T. & T.

ity. Under operating conditions a number of different programs are routed simultaneously to split sections of the country. The network routing may undergo a major rearrangement every 15 minutes, or one of the many programs may require even shorter interval switching.

Fig. 1.12C illustrates a portion of the A.T. & T. television network center at New York. This photo shows the line-up of monitoring positions. The operator in the foreground is in front of a central switching jack panel, with a picture monitor and waveform oscilloscope on each side of his position. A loudspeaker, volume indicator, and associated controls are also in view for suitable audio monitoring and control. Pushbuttons on the central jack panel operate remotely controlled coaxial line switches at the coaxial terminal equipment point. Telephone order circuits appear at the bottom of the panel.

TV networks, as well as some studio-to-transmitter routes, may use coaxial transmission lines instead of RF relays. Coaxial lines, unlike telephone cables are capable of providing sufficient bandwidth of transmission for television signals. A coaxial line is actually a copper tube with an inner conductor of heavy guage copper wire held in the center of the tube by insulating discs spaced along the conductor.

Coaxial cables for network service contain eight coaxial tubes about the diameter of a fountain pen, along with a limited number of ordinary wire circuits for maintenance purposes or short-haul telephone service. Such a cable is illus-

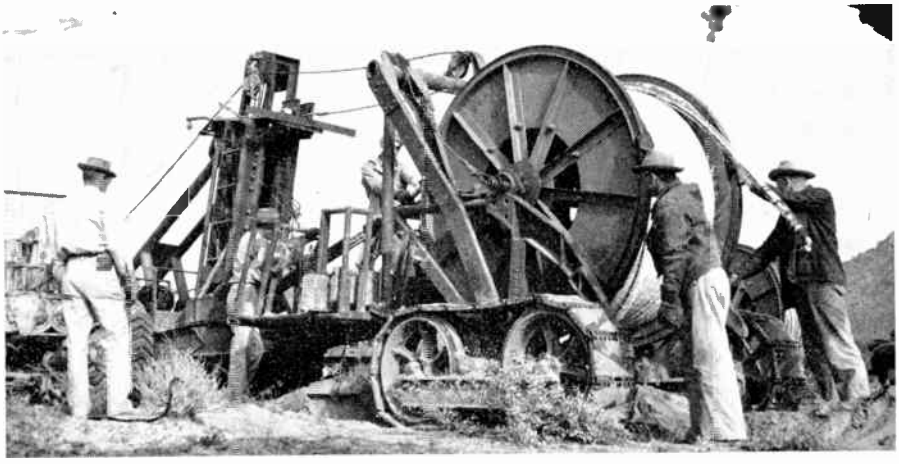

Figure 1.12E. A new reel of coaxial cable has been placed on the trailer. When the end has been secured to the overlapping end of the buried section, the train will continue plowing in the cable from the new reel along the El Paso-Phoenix link in the coast to coast coaxial cable. This installation is now completed. Courtesy A. T. & T.

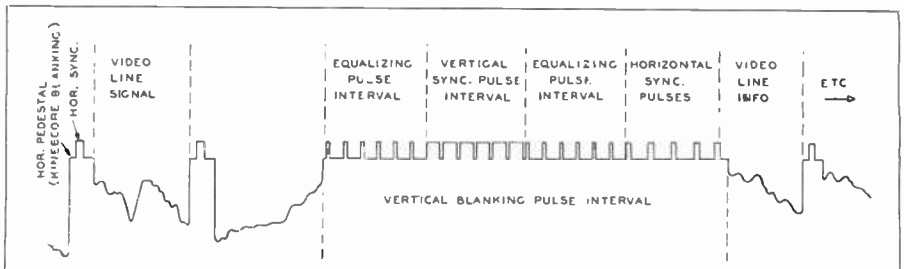

At the end of each line of video information, a kinescope horizontal blanking pulse is transmitted. This pulse is a "pedestal" upon which the horizontal sync pulse is constructed. At the end of each field, a kinescope vertical blanking pulse is transmitted. This is the vertical pedestal upon which the complex vertical sync and equalizing pulses are placed. When the next field is started at top of raster, the process repeats itself.

Figure 1.13A. Simple representation of composite video waveform

trated in Fig. 1.12D. The entire cable is approximately the size of a man's wrist.

As the TV signals travel along the coaxial lines, their energy becomes weakened and must be periodically amplified. Thus the cables terminate approximately every eight miles in the terminal amplifiers of a repeater station. The majority of such stations are unattended and receive power for the amplifiers over the cables themselves. At the more infrequent main stations, the required power is supplied to the auxiliary points and an alarm system similar to that described for RF relays, conveys information as to operating conditions of the unattended repeater stations.

The network coaxial cable is placed underground, deep enough to be unaffected by ground movements caused in hard freezing and thawing. Thus the lines are assured of freedom from storms, fires, falling trees, and other menaces common to above ground lines. In laying the cable (see Fig. 1.12E) the coaxial cable is contained on large reels mounted on a trailer and is threaded

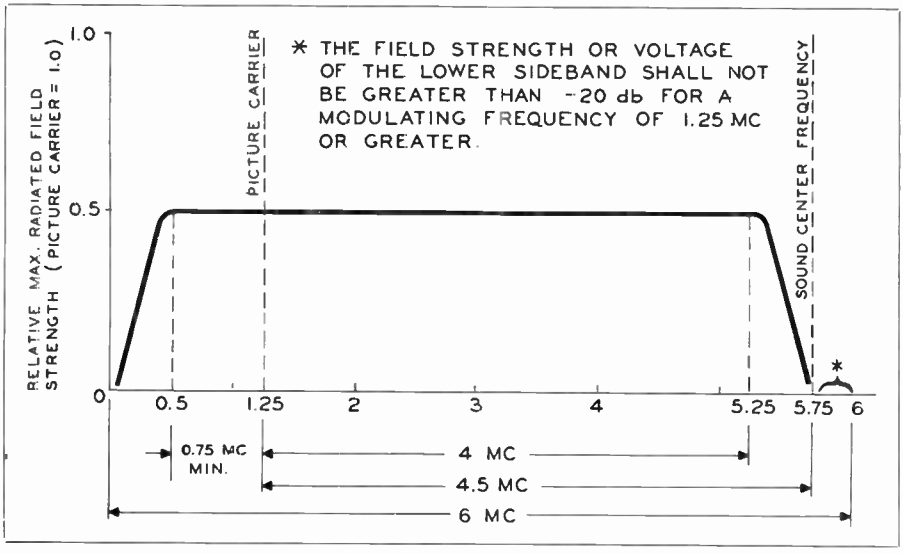

Figure 1.13B. Vestigial characteristic of RF signal. (After FCC Standards)

through a slotted plowshare which buries the cable as the tractor progresses across the land.

1.13 *The Nature of TV Waveforms and Channels*

Fig. 1.13A is a representation of the composite signal transmitted by the video transmitter. A summarizing of the individual signals making up the composite waveform may be presented as follows:

Where the vertical blanking time is assumed to be 5 per cent of total frame time, the number of picture elements (section 1.5) per frame (as limited only by the scanning aperture) may be found thus:

525 (total lines) $\times$ 0.05 (5% vertical blanking time) = 27

The value 27 is the number of retrace lines.

Therefore 525 — 27 = 498 active lines which contain the picture information.

Channel No.	Frequency Limits (Mc)	Freq. of Visual Carrier (Mc)	Freq. of Aural Carrier (Mc)	Channel No.	Frequency Limits (Mc)	Freq. of Visual Carrier (Mc)	Freq. of Aural Carrier (Mc)
2	54-60	55.25	59.75	43	644-650	645.25	649.75
3	60-66	61.25	65.75	44	650-656	651.25	655.75
4	66-72	67.25	71.75	45	656-662	657.25	661.75
5	76-82	77.25	81.75	46	662-668	663.25	667.75
6	82-88	83.25	87.75	47	668-674	669.25	673.75
7	174-180	175.25	179.75	48	674-680	675.25	679.75
8	180-186	181.25	185.75	49	680-686	681.25	685.75
9	186-192	187.25	191.75	50	686-692	687.25	691.75
10	192-198	193.25	197.75	51	692-698	693.25	697.75
11	198-204	199.25	203.75	52	698-704	699.25	703.75
12	204-210	205.25	209.75	53	704-710	705.25	709.75
13	210-216	211.25	215.75	54	710-716	711.25	715.75
14	470-476	471.25	475.75	55	716-722	717.25	721.75
15	476-482	477.25	481.75	56	722-728	723.25	727.75
16	482-488	483.25	487.75	57	728-734	729.25	733.25
17	488-494	489.25	493.75	58	734-740	735.25	739.75
18	494-500	495.25	499.75	59	740-746	741.25	745.75
19	500-506	501.25	505.75	60	746-752	747.25	751.75
20	506-512	507.25	511.75	61	752-758	753.25	757.75
21	512-518	513.25	517.75	62	758-764	759.25	763.75
22	518-524	519.25	523.75	63	764-770	765.25	769.75
23	524-530	525.25	529.75	64	770-776	771.25	775.75
24	530-536	531.25	535.75	65	776-782	777.25	781.75
25	536-542	537.25	541.75	66	782-788	783.25	787.75
26	542-548	543.25	547.75	67	788-794	789.25	793.75
27	548-554	549.25	553.75	68	794-800	795.25	799.75
28	554-560	555.25	559.75	69	800-806	801.25	805.75
29	560-566	561.25	565.75	70	806-812	807.25	811.75
30	566-572	567.25	571.75	71	812-818	813.25	817.75
31	572-578	573.25	577.75	72	818-824	819.25	823.75
32	578-584	579.25	583.75	73	824-830	825.25	829.75
33	584-590	585.25	589.75	74	830-836	831.25	835.75
34	590-596	591.25	595.75	75	836-842	837.25	841.75
35	596-602	597.25	601.75	76	842-848	843.25	847.75
36	602-608	603.25	607.75	77	848-854	849.25	853.75
37	608-614	609.25	613.75	78	854-860	855.25	859.75
38	614-620	615.25	619.75	79	860-866	861.25	865.75
39	620-626	621.25	625.75	80	866-872	867.25	871.75
40	626-632	627.25	631.75	81	872-878	873.25	877.75
41	632-638	633.25	637.75	82	878-884	879.25	883.75
42	638-644	639.25	643.75	83	884-890	885.25	889.75

Table 1.13C

The *aspect ratio* is 4 to 3, which means that the picture is 4 elements wide to 3 elements high.

Therefore, 4/3, or $1.33 \times 498 = 664$ (approx) horizontal elements. Thus we determine that about 664 "picture elements" are contained in each line of picture information. Since there are 498 active lines:

$498 \times 664 = 330{,}672$ picture elements.

Thus it is found that a complete frame will contain approximately 330,672 picture elements.

Visualize this data as follows: each *line width* in the picture is the diameter of the scanning spot. Since there are 498 active lines in a total frame, 498 *vertical* elements comprise the height of the picture. As shown above, the *width* of the picture is 4/3 of the height, therefore *each line* is comprised of 664 *horizontal* elements.

An *approximation* of the transmission bandwidth required for the numerical values found above may be determined as:

$$\text{Bandwidth} = \frac{\text{horizontal picture elements}}{2} \times \text{number of lines (active and inactive) per frame} \times \text{number of pictures per second}$$

or:

$$\text{Bandwidth} = \frac{664}{2} = 332$$

$$332 \times 525 \times 30 = 5{,}229{,}000 \text{ cps.}$$

or approximately 5.3 megacycles per second.

It is noted in the above computation that the number of horizontal picture elements is first divided by two. This is necessary since interlaced two-to-one scanning is employed, and *one cycle equals two picture elements.*

Thus it is found that a bandwidth of 5.3 megacycles would be theortically necessary for proper transmission of the composite video signal. In practice, the total bandwidth allowed per channel by the FCC for both video and audio is 6 megacycles. The width of the video portion of a TV channel is only 4.5 mc as compared to the 5.3 mc derived in the above computations.

This value was established as standard after careful tests regarding comparative resolution (detail) of a transmitted picture. The radiation spectrum is at a premuim, and every effort must be made to conserve frequencies. It was found by these tests that the slight loss of horizontal resolution resulting from the narrowed bandwidth is not apparent at the receiver kinescope.

In practice, one complete sideband of the carrier is transmitted and only a small part (vestige) of the other sideband. This is illustrated in Fig. 1.13B. The total width is 6 mc. The visual carrier is located 4.5 mc lower in frequency than the aural center frequency. (The aural signal is frequency modulated as discussed in section 1.14). The aural center frequency is 0.25 mc lower than the upper frequency limit of the channel.

As a practical example, consider the TV channel 2. This is the 54-60 mc band. Since the aural carrier center frequency is 0.25 mc below the upper limit, it is found to be 59.75 mc. The visual carrier is 4.5 mc lower than the aural center frequency, or 55.25 mc.

The relationship of TV channels 2 through 83 is shown in Table 1.13C.

1.14 TV Transmitters and Antennas

The basic functions of a television transmitter are comprised of two purposes; (a) to provide a video carrier, *amplitude* modulated with the composite TV wave form (section 1.13) and (b) an aural carrier, *frequency* modulated with the audio program signal.

One hundred per cent modulation of a regular FM broadcast transmitter in the 88-108 mc region is referred to ± 75 kc, or a total modulation bandwidth of 150 kc. In television, however, the FM aural transmitter refers to 100% modulation as ± 25 kc, or a total modulation bandwidth of 50 kc.

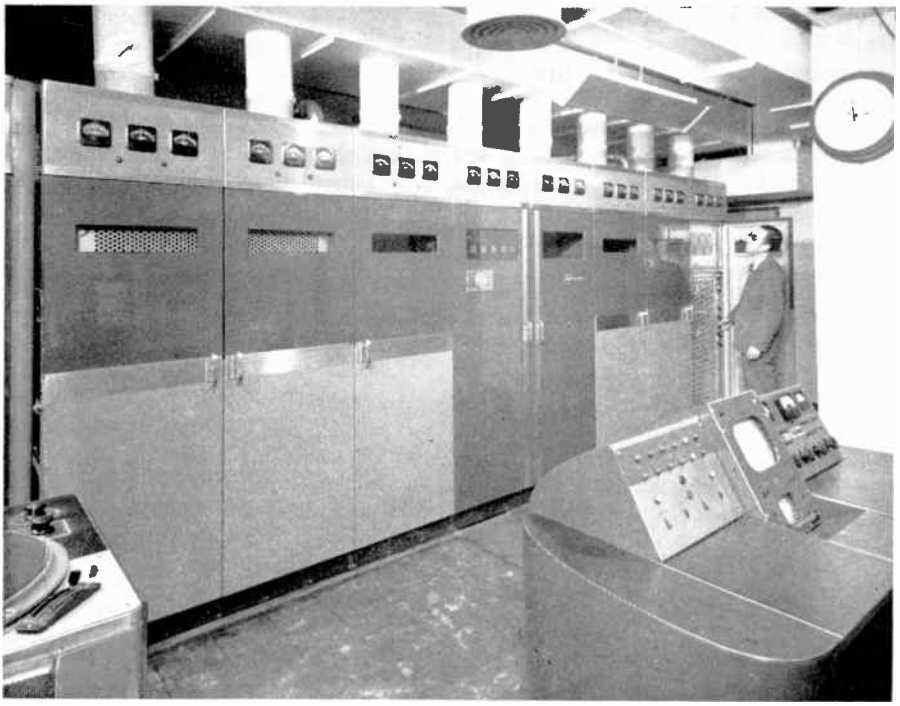

Figure 1.14A. RCA TT-5A transmitter at WENR-TV, Chicago, Courtesy RCA.

As pointed out in the previous section, the video composite waveform is alloted 4.5 megacycles of the total channel of 6 mc. Thus the modulator section must be broad band just as are the previous video amplifiers in the camera chain at the studio.

The number of broad band radio-frequency circuits of the carrier amplifier will depend upon the method of modulation. When the final stage is modulated, the final power amplifier is the only broadband RF stage necessary. When a lower level RF stage is modulated, all following RF amplifiers must respond to a bandwidth of 4.5 mc. The tuned RF stages from the oscillator up to the modulated stage are ordinary high-frequency transmitter circuits that may be "meter-tuned" as in other transmitters.

There are advantages and disadvantages to either high level or low level modulation. In practice, the major manufacturers differ in their ideas of the best method to use, and transmitters, therefore, differ in this respect. When the final video carrier stage is modulated (high-level modulation) grid modulation is used, rather than plate modulation, due to several design factors. When this method is used, the lower sideband is cut off (for single sideband transmission, see previous section) by means of a device known as a *vestigial sideband filter* discussed later.

When lowlevel modulation is used, the remaining RF carrier amplifiers must be broad band and tuned in such a way that the lower sideband is cut off by amplifier circuit characteristics. To make tuned circuits broad band, low impedance output circuits must be used at a sacrifice of gain per stage. Tuning must be done by special equipment using "marker" dots and oscilloscopes to accomplish the proper bandwidth and suppression of the lower sideband. Lower powered modulator sections may be used,

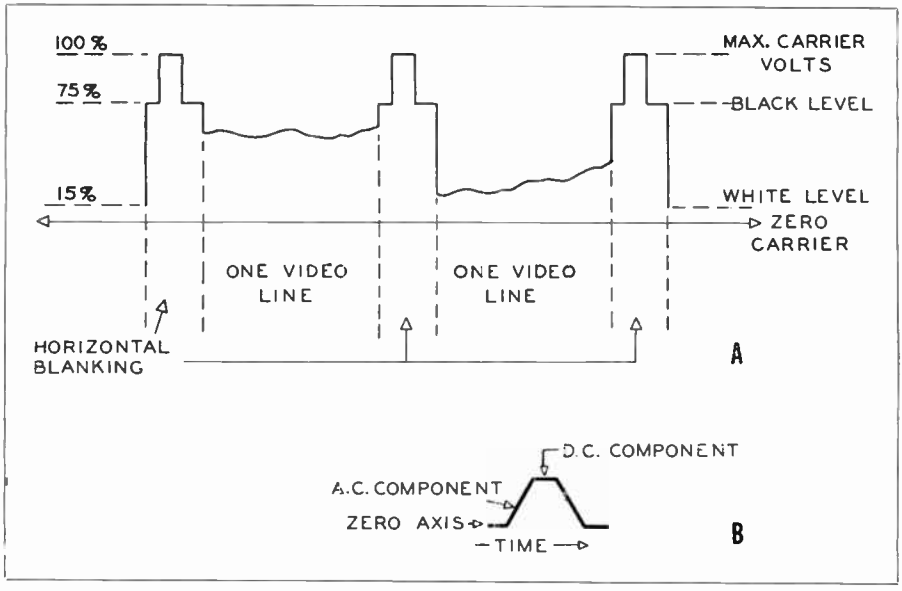

Figure 1.14B.

however, and the use of an expensive vestigial sideband filter is eliminated.

As an informative insight into the types found in practice, three specific TV transmitters are briefly described at this point.

1. RCA TT-5A. For TV channels 2 through 13. Modulates the grid circuit of the power amplifier output stage (high level modulation). This stage feeds into a vestigial sideband filter as described later to remove the lower sideband, or rather attenuate it to the required —20 db at a point 1.25 mc below the carrier frequency (discussed more fully later). The RCA TT-5A transmitter is illustrated in Fig. 1.14A.

2. General Electric TT-7-A/B. For TV channels 2-13. Low level plate modulation is employed. This modulated stage is excited in the grid circuit by the RF carrier amplifier from the crystal oscillator, and plate modulated at a peak-to-peak level of only about one watt. This stage is followed by a series of 5 or more (depending upon low or high band operation) class B linear RF amplifiers. Triodes are operated grounded-grid, with a high efficiency grounded-grid power amplifier in the final. Each linear amplifier acts as a section of a filter so that at the final stage, the required vestigial sideband signal prevails. Thus, of course, no extra filter is necessary with consequent output power loss.

3. The Du Mont Master Series. The Du Mont TV transmitters use a modulation system which is just between a strictly low level and high level method. The modulated stage grids receive both the RF carrier voltage from the oscillator-amplifier section, and the composite TV video waveform from a three-section modulator. (Therefore grid-modulated.) The output of this stage drives a series of class B linear amplifier stages, three being used for a 5 kw power output. The linear stages, as in the G.E. transmitter above, are tuned to attenuate the lower sideband, and no output filter is necessary.

The possible input and output load impedances of a tube in a TV transmitter is determined largely by its capacitances, since, at the VHF and UHF the capacities are the predominating impedances. The *figure of merit* of a vacuum tube is a ratio used to express the rela-

tive ability to amplify high video frequencies. Thus, at high frequencies, gain is proportional to transconductance and inversely proportional to shunt capacitance, and may be expressed as:

$$\text{figure of merit} = \frac{gm}{C_t}$$

where gm = tranconductance in micro-mhos

C_t = total shunt capacitance in micro-microfarads

It may be seen now why *plate modulation* of high power stages is not practical for a TV transmitter. The output capacity of a large 5 kw stage modulator tube working into an ordinary shunt-compensated circuit will be in the order of 200 micro microfarads. Since transformers cannot be used for the modulated stage due to *DC reinsertion* (discussed below), the plate voltage for the modulated tube would have to be supplied directly by the modulator tube across the plate load. In the instance cited here, the modulator tube would "see" a capacity of 200 mmf, or a load of 199 ohms at 4 mc. ($X_c = \frac{1}{2\pi fc}$). The required 3 to 4 kw peak-to-peak video signal into 199 ohms would necessitate a power of approximately 100 kw from the modulator.

Therefore when high level modulation is used as in the RCA TT-5A transmitter, the grids of the final are modulated rather than the plate. When plate modulation is used as in the G.E. transmitter, low level modulation takes place at a power level of a few watts where both the modulated stage and modulator tubes are small, with low capacitances.

Another function peculiar to TV transmitters is the matter of *DC reinsertion*. To understand the necessity for such function, it is well here to review briefly the composite TV waveform.

Fig. 1.14B (a) shows a graphical representation of two lines of video information, with the horizontal blanking pedestals (at end of each active line) upon which is inserted the horizontal sync pulse. Maximum signal exists (at transmitter output) upon black portions of a scene. In television, as in any system of transmission, certain maximum values related to 100% modulation of the transmitter must exist. As shown in Fig. 1.14B (a), the "black level" of the picture equals or nearly equals the blanking signal level. TV standards set this value at 75% of 100% modulation. The sync pulse peaks then occupy the remaining 25% of carrier amplitude, and the transmitter reaches 100% modulation only on sync pulse peaks. It is also shown that maximum white level is held to 15% of the total carrier amplitude, never reaching zero.

Fig. 1.14B (b) points out the fact that a pulse such as a blanking pedestal or synchronizing pulse has two components. The AC component is the "sides" forming the pulse where the value is changing with respect to time. The "flat top" of the pulse or video signal is a DC component, since it maintains a steady value of amplitude over a period of time.

Obviously the DC component is lost in ordinary transformer or R-C coupled circuits which act only upon changing values of voltage or current. Therefore in TV systems, *DC reinsertion* is accomplished at certain important points in the system. It is also carried out in the TV receiver.

Some reference must be used for establishing the DC level of the picture signal. It is recalled that the peaks of the sync pulses are maintained at a constant level above the pedestal (blanking) signal. At the transmitter this relationship may serve as the reference voltage for establishing the DC level of the carrier amplitude.

By means of the DC restorer tube and network which is "keyed" by the horizontal sync pulses, the modulator tube bias is automatically returned to the same predetermined value for each blanking pulse. This action, in effect, restores the DC component. The modulator plates are "directly coupled" to the grid or plate of the RF stage so that the DC value is maintained.

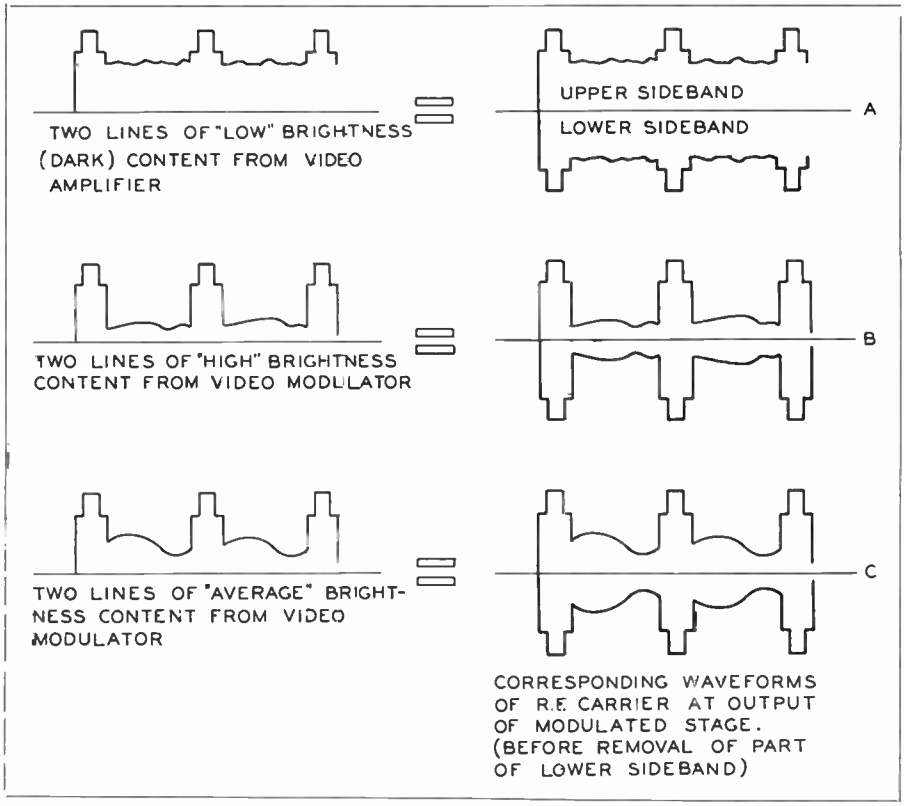

Figure 1.14C. Action of modulator and modulated stage of TV transmitters.

Another type of circuit commonly used in conjunction with the DC restorer is known as a *clamping circuit*. Such a circuit *maintains a constant voltage level output for an input waveform which contains amplitudes in the positive or negative sides above a predetermined value*. Clamping circuits are used in other points of the complete TV system and will be described where applicable in the following chapters. The basic function should be memorized at this time.

A *sync-pulse expander* is also common at transmitters and elsewhere in the TV chain of amplifiers. This type of circuit is used to compensate for any loss in the amplitude of the sync pulse. In a typical circuit, a class A amplifier which amplifies all the composite signal is used to excite a class C amplifier which draws plate current only on *peaks* (the sync pulse) of the signal. This added current, combined with the output of the class A amplifier, serves to expand the signal at the time of the sync pulse.

The TV transmitter radiates a composite modulated RF carrier as follows:

1. The RF carrier wave generated by the crystal oscillator, and amplified.

2. The picture signal content from the studio cameras, which is used to amplitude modulate the RF carrier.

3. The sync pulses as follows:

(a) Horizontal blanking pulse (Horizontal pedestal).

(b) Horizontal sync pulse (constructed upon the H pedestal).

(c) Vertical blanking pulse (vertical pedestal).

(d) Vertical sync pulse (constructed upon the V pedestal).

(e) Equalizing pulses (also constructed upon the V pedestal), preceding and succeeding the serrated vertical sync pulse.

Fig. 1.14C shows the appearance of the carrier envelope at the modulated RF stage, therefore prior to removal of the lower sideband. In (a) is the character of the envelope for two lines of almost black content. The carrier wave will be at maximum level. In (b) is the appearance for two lines of highest brightness, and the carrier amplitude will be at a minimum (approximately 15%). It is noted that the blanking pedestals and sync pulses remain of constant amplitude under video modulation (dc restoration). In (c) is shown two lines of "average" brightness. This system of modulation is termed *negative transmission.* It means that the *more* light content in the picture, the *less* the carrier amplitude. This is the standard method for the United States, and contains a number of advantages over *positive transmission* as follows:

1. Since the *black level* is maintained constant, and the sync peaks (representing a very short interval of time) represent the maximum radiated power, a considerable reduction in average power results. Since most of the signal represents varying degrees of lightness, the average carrier power is relatively low.

2. Electrical impulses constituting "noise" which are of amplitude variations are more readily compressed.

3. Negative transmission allows use of the pedestal level (black level) and sync peaks to operate a comparatively simple type of automatic gain control (AGC) at the receiver.

As mentioned earlier, when high level video modulation is used, a band elimination filter must be used to attenuate the lower sideband. This filter is known as a *vestigial sideband* filter and is placed between the final RF amplifier and antenna as shown in Fig. 1.14D.

The FCC Standards state that the lower sideband shall not be greater than minus 20 db for a modulating frequency of 1.25 megacycles or higher. The vestigial sideband filter accomplishes this attenuation. It is actually composed of coaxial elements which act as the simplified schematic of Fig. 1.14D. The low pass filter accepts the lower sideband

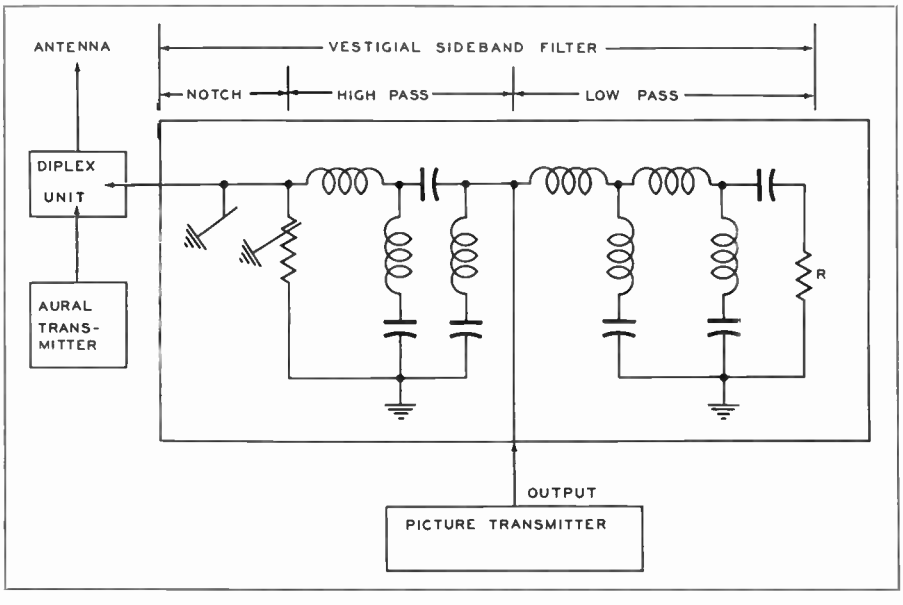

Figure 1.14D.

and dissipates its power in the load resistor R. The high pass filter allows the upper sideband to pass, and the *notch filter* is an arrangement so tuned that it produces a "notch" at the critical point, dissipating energy at a frequency 0.25 megacycles below the lower limit of the channel. This provides protection to the next lower TV channel.

The *diplex unit* is necessary since two transmitters, the visual and aural, are feeding a common antenna system. The equivalent schematic of a diplexer unit is shown in Fig. 1.14E. The principle is that of a balanced bridge which prevents interaction between the two transmitters. The resistive elements labeled N-S (north-south) and E-W (east-west) radiators represent the elements of a super-turnstile antenna. The balancing impedances are adjusted to "balance" the bridge circuit. Thus each transmitter feeds between two points of equivalent potential with respect to the other, and no interaction is possible when properly balanced. In order to effect a substantially circular radiation pattern from the elements of the antenna which are at right angles to each other, a phasing loop is inserted in one transmission line. This is actually an extra quarter-wave line section which delays the signal 90 degrees for the associated radiator.

There are several forms of TV transmitting antennas, the most popular being the above mentioned *super-turnstile* or "bat-wing" antenna. Regardless of the type, they are characteristically broad band for operation over a six megacycle range. They are also capable of power gain, since high-angle radiation is concentrated in the horizontal plane.

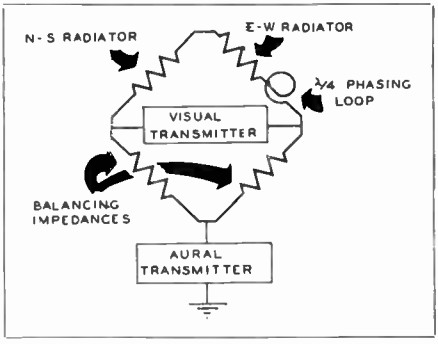

Figure 1.14E. Diplexer.

The *antenna field gain* is a rating commonly encountered in literature on TV antennas. The reference is an ordinary dipole with 1 kw input power, having a constant of 137.6 millivolts per meter at one mile. Thus antenna field gain is the *ratio* of the effective free-space field intensity produced by a given antenna of 1 kw power input at 1 mile in the horizontal plane to that of the constant 137.6 millivolts per meter. *Antenna power gain* is the square of the field gain. The greater the vertical number of antenna elements, the greater the gain.

CHAPTER

2

Details of the Television Camera

2.1 *The Camera Lens*

The lens is the device used to impart *definition* in the image built upon the photosensitive surface of the pickup tube. The TV tyro should thoroughly review paragraph 1.1 in Chapter One before going on with this study. Fig. 2.1A is a photograph of four sizes of lens commonly used on TV cameras in the studio.

In the television system, the lens must not limit the three dimensions of definition important to picture quality. These dimensions are (a) Horizontal definition, (b) Vertical definition, and (c) depth of field definition.

Details of the actual construction of a complete lens to overcome natural deficiencies in such optical devices are not important to the TV operator. He should, however, be as familiar with the general types of lenses as he is with the general types of capacitors and resistors used in radio circuits, even though actual construction of them is never undertaken.

Defects of a single lens, such as spherical and chromatic aberrations, are overcome in practice by using a lens system consisting of a number of different types of lens. In most cases, the individual lens are cemented together, giving the physical appearance of one unit. This arrangement of a typical TV type lens is illustrated in Fig. 2.1B. This should not be considered as an iron-clad rule, however, for all TV lenses.

Figure 2.1A. Courtesy Eastman Kodak Company.

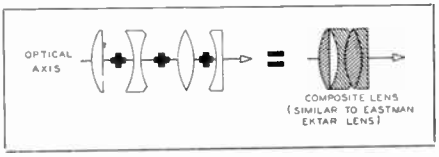

Figure 2.1B. Actual camera lens may be composite lens for correction of certain optical deficiencies.

The *focal length* (designated by the large letter F) is one important characteristic. Fig. 2.1C (1) shows how light rays from a source are converged to a

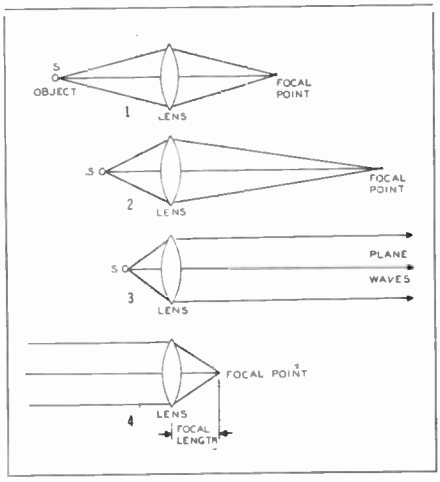

Figure 2.1C.

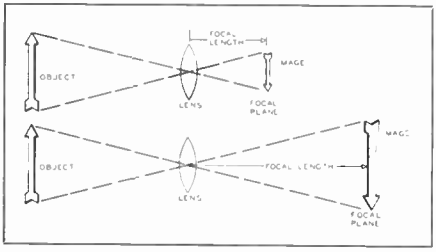

Figure 2.1D. Effect of focal length of lens on size of image.

"focus" by a lens as shown, and as discussed previously. (Section 1.1). As the source of light (S) is brought closer to the lens, Fig. 2.1C(2), the focus recedes as shown. In other words, the light rays are bent by a certain amount (refractive index) and the greater the original divergence, the less the convergence of the light rays transmitted by the lens.

If the light source is brought sufficiently near the lens, the transmitted light waves no longer converge, but become simply plane waves as illustrated in Fig. 2.1C(3). Conversely, plane waves, i.e., light waves coming from a point very distant from the lens, will be caused to converge upon the "principal focus." Fig. 2.1C(4) shows the effect, and the distance from the optical center of the lens to this point is known as the *focal length.*

DEFINITION: FOCAL LENGTH IS THE DISTANCE FROM THE OPTICAL CENTER OF THE LENS TO THE IMAGE, WHEN THE LENS IS FOCUSED ON INFINITY. In practice, "infinity" is any objects at distance greater than 100 feet from the lens.

Thus if this point occurs at (for example) 8½" behind the lens when focused upon "infinity," the focal length (F) is said to be 8½".

The most apparent distinguishing characteristic of the F of a lens is the physical length. This is illustrated in Fig. 2.1A. It is observed that the greater the local length, the greater the physical size.

The focal length of a lens governs the size of the image and the angle of field covered.

Fig. 2.1D illustrates the effect of F on the size of the image. It is obvious that the longer the focal length F, the greater distance will the rays of light have to diverge before focusing the image. (Focal plane). Thus telephoto type lenses of long focal length are able to bring us a "close-up" of a ball carrier in a football game, even though the camera is up in the stands or on the sidelines.

The greater the focal length, however, the less is the horizontal and vertical fields able to be "covered." The table of 2.1E shows the horizontal field angles for the most popular sizes of TV lens.

This table is true only for cameras using the image orthicon pickup tube.

To illustrate the difference in relationship of the focal length F to the *width of field* between an *image orthicon* and *iconoscope* type pickup tube, the following ratios may be set up:

$$\frac{F}{\text{Light-Sensitive Surface (width in inches)}} = \frac{\text{Distance of Subject from Lens}}{\text{Width of Field}}$$

Description	f:Number	Total Horizontal Field Angle. (Width of Field)
Studio camera lens 35mm (1½")	f:3.3	51.5°
Studio camera lens 50mm (2")	f:1.9	34°
Studio camera lens 90mm (3½")	f:3.5	19°
Studio camera lens 135mm (5.3")	f:3.8	13°
Studio and Field camera lens 8½"	f:3.9	8°
Studio and Field camera lens 13"	f:3.5	5°
Field camera lens 15"	f:5.0	4.5°
Field camera lens 17"	f:5.0	4°
Field camera lens 25"	f:5	2.75°

Toble 2.1E.

That is; the focal length (F) is to the *mosaic* (in an iconoscope) or the *photocathode* (in an image orthicon) as the distance from the lens to the subject is to the width of field. The *width of field* is the horizontal area covered for a given distance from the lens.

As an example of determining the width of field for an 8½" lens at 10 feet; first for the image orthicon type tube, then for an iconoscope tube, we may set up the width of field as the unknown (X) thus:

$$\frac{8.5''}{1.2''} = \frac{10 \text{ ft. } (120'')}{X}$$

The *width* of the *photocathode* in all image orthicon tubes *may be taken as 1.2 inches*, as shown in the above formula.

Solving:

$$8\tfrac{1}{2}\ X = 168$$

Therefore $X = 19.76$ inches or 1.7 feet (approx.)

Thus for an image orthicon type camera, the width of field 10 feet from the 8½ inch lens is approximately 1.7 feet.

Now to figure the width of field for an 8½" lens when used with an iconoscope camera; the width of the *mosaic* in an iconoscope tube is 4.75 inches, and our equation becomes:

$$\frac{8.5''}{4.75''} = \frac{120''}{X}$$

then $8.5\ X = 570''$

and $X = 67''$ or 5.58 feet (approx.)

Thus for an iconoscope type camera, the width of field 10 feet from the lens is approximately 5.6 feet.

The image orthicon tube is used almost exclusively in modern TV cameras for studio and field pickup. The iconoscope is used mainly for film and slide pickup. The iconoscope requires much greater light for satisfactory image response, and the picture is somewhat inferior to that obtained from the more sensitive image orthicon.

TV standards call for an *aspect ratio* of 3 units high to 4 units wide. Thus the vertical field is ¾ of the horizontal field, and the light sensitive surfaces of pickup tubes are proportioned accordingly. Thus the vertical field for the image orthicon *in the above example* is ¾ of 1.7 feet, or approximately 1.27 feet. For the iconoscope, the vertical field is ¾ of 5.6 feet, or approximately 3.45 feet.

The coordination of this type of data with camera operating technique is expanded in Chapter 6, Part 2 of this book.

Another important aspect of the TV lens is the *rated speed*. The "speed" of a lens determines the amount of light which must be used for satisfactory reproduction. Changing the speed of a lens affects the *depth of field*, described below.

The relative amount of light that gets through a lens depends upon the diameter. Obviously, a larger lens admits more light than a smaller one. Due to physical difficulties in the optical processes of "grinding" a high quality lens, and correcting it for certain deficiencies such as the color effect of focusing described earlier, the maximum size of the lens is limited.

A lens speed is rated at its "widest stop," that is, at the maximum diameter of the *iris* opening. The lens iris performs the same function as the human iris of the eye. When we look at a relatively bright scene, our iris contracts and admits less light, allowing us to distinguish the object without "blinding" our sense of sight. The TV iris varies the opening which allows light to pass through the lens.

The "stop opening" of the iris is designated by the small letter f, and is related as follows:

$$f = \frac{F}{D}$$

where f = stop value
F = focal length
D = lens diameter with iris opened wide (Iris opening diameter).

Thus it is observed that the f: number is rated *in proportion to the focal length*. If the widest stop on our iris is one inch, and the lens is an 8½ inch focal length:

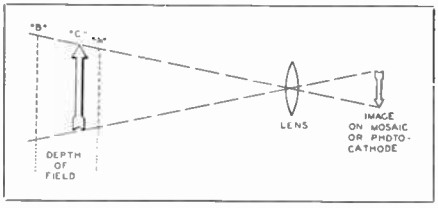

Figure 2.1F.

$$f = \frac{8.5}{1} = f{:}8.5$$

For the same 8½ inch focal length lens, a lens diameter of 2 inches would result in a "speed," or f: number of f:4.25, a diameter of 4 inches giving a very fast action of about f:2 speed.

A short focal length lens such as a 50 mm (2 inch), F gives a wider angle of field, and smaller image. A one inch diameter lens in this example would give an f:2 speed.

A relatively "fast" lens is exemplified by the ratings of f:1.9 or f:2.7. "Medium" speed is exemplified by such values as f:3.5, f:5.5. A relative "slow" lens has values of f:6.8, f:16 or f:22.

In practice, the iris on a TV camera is used to meet a variety of operating conditions. One of the more important effects of the "stop value" is the resulting influence on the *depth of field.*

As is probably obvious to the reader, the camera is rarely called upon to focus upon only one object. Usually, several objects or a comparatively large area of a scene is distinguished by the eye as being "in focus." This area is determined by the depth of field.

DEFINITION: DEPTH OF FIELD IS THE DISTANCE BETWEEN THE NEAREST OBJECT IN FOCUS TO THE FARTHEST OBJECT IN FOCUS, WHEN THE LENS IS FOCUSED UPON A GIVEN POINT. This is illustrated basically by Fig. 2.1F.

To gain a comprehensive mental picture of depth of field, it is well to explore the mechanics of "focusing" by a camera-lens system. Look to Fig. 2.1G. Remembering the basic principle of focusing, it is observed that the near object is "focused" at a certain point as shown, and so is the far object. At a certain point between the two images is shown the ideal point for best focus of both objects. Now study the point of focus for the *far object.* The path of the rays of light from the *near object* forms a small diffused circle of light (the drawing is exaggerated for study). Now look at the point of focus for the *near object.* Here the rays of light from the *far object* (which are now diverging again) again form a diffused circle of light. These "circles" are called "circles of confusion," and in practice must be kept under 1/100 of an inch to be unnoticed by the eye. Thus it is understood why objects outside the "depth of field" appear hazy or "unfocused."

Fig. 2.1H shows the effect of "stopping down" the active lens area by means of the iris diaphragm. The circles of confusion are greatly reduced by an amount depending upon the f: ratio, and the image is sharper, *allowing a greater depth of field.* In other words, the objects in good focus may be farther apart when using a smaller stop opening before the circles of confusion become great enough to cause a diffused (blurry) picture.

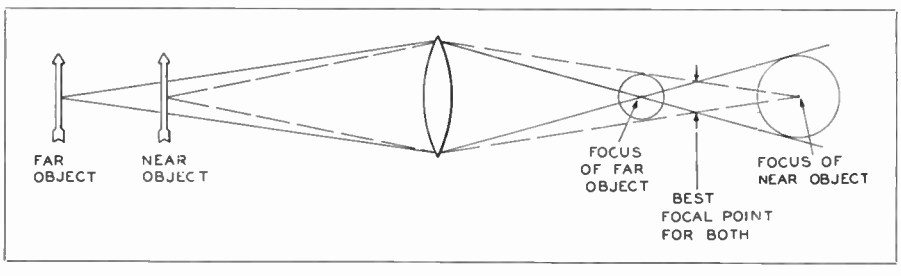

Figure 2.1G. Greatly exaggerated drawing of "circles of confusion."

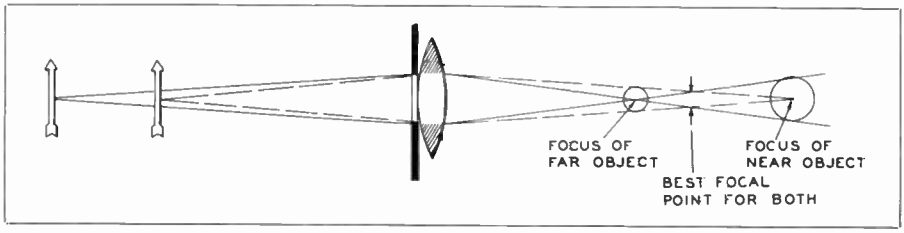

Figure 2.1H. Illustrating how smaller stop number reduces "circles of confusion," giving sharper image.

It should be noted at this time, that the field behind the principal focal point is greater in depth than the field in front of that point. The importance of this characteristic is more apparent in our operations study of Chapter 6, and is proved later in this section.

A closely related feature is the *depth of focus*, not to be confused with the above discussed depth of field.

DEFINITION: DEPTH OF FOCUS IS THE DISTANCE BETWEEN THE NEAREST IMAGE BEHIND THE LENS THAT IS IN FOCUS, AND THE FARTHEST IMAGE BEHIND THE LENS THAT IS IN FOCUS, when the lens is focused upon a given point. This is basically illustrated in Fig. 2.1I.

Another property of a lens, very important to the understanding of camera operation, is the *hyperfocal distance*. If the operator is workably familiar with the hyperfocal distance, he may more readily correlate the operational properties of his camera with focal length (F), lens speed (f) and depth of field that particular lens will adequately define.

The hyperfocal distance of any particular lens is *the nearest point at which objects are in sharp focus when the lens is adjusted for "infinity."* This distance for any lens is related to the focal length (F) and the stop opening (f) used as follows:

$$H = \frac{1000\ F}{f} \text{ inches}$$

Example: Assume a lens of 50mm (2 in.) focal length (F) using a stop opening of f:4

$$H = \frac{1000\ (2)}{4} = \frac{2000}{4} =$$

$$500 \text{ in.} = 41'9'' \text{ (approx.)}$$

In this example, the hyperfocal distance is about 41′9″. If this lens, instead of being focused upon "infinity," were *focused* upon the *hyperfocal distance* of 41′9″, all points from infinity down to one-half the hyperfocal distance will be within the depth of field. Thus a range of infinity down to one-half the above, or about 20′9½″ would be sharply focused by the lens system.

The next point of interest to the operator concerning the property of hyperfocal distance, is to visualize the nearest and farthest limits of depth of field when a given lens is focused at any certain distance from the lens. These limits are mathematically related as follows:

$$\text{nearest limit} = \frac{H \times d}{H + d}$$

$$\text{farthest limit} = \frac{H \times d}{H - d}$$

where H is the hyperfocal distance and d is the distance from the lens focused upon.

Example: For the lens given in the previous example, the nearest limit of depth of field when the lens is focused for 50 feet; (600 in.)

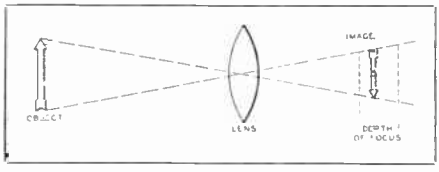

Figure 2.1I.

Focused Distance In Feet	Nearest and Farthest Limits of Depth of Field					
	H=175″	H=250″	H=350″	H=500″	H=700″	H=1000″
4	3′ 2″ 5′ 6″	3′ 4½″ 4′11½″	3′ 6″ 4′ 7½″	3′ 8″ 4′ 5″	3′ 9″ 4′ 3½″	3′ 9½″ 4′ 2½″
7	4′ 9″ 13′ 5½″	5′ 3″ 10′ 8″	5′ 7½″ 9′ 2½″	6′ 0″ 8′ 5″	6′ 3″ 7′11½″	6′ 5½″ 7′ 7½″
10	5′11″ 31′10″	6′ 9″ 19′ 3″	7′ 5½″ 15′ 2½″	8′ 1″ 13′ 2″	8′ 6½″ 12′ 1″	8′11″ 11′ 4″
15	7′ 4½″ ∞	8′ 8½″ 53′ 7″	9′11″ 30′10½″	11′ 0″ 23′ 5″	11′11″ 20′ 2″	12′ 8½″ 18′ 3½″
25	9′ 2½″ ∞	11′ 4½″ ∞	13′ 5½″ 175′ 0″	15′ 7½″ 62′ 6″	17′ 6″ 43′ 9″	19′ 3″ 35′ 9″
∞	14′ 7″ ∞	20′10″ ∞	29′ 2″ ∞	41′ 8″ ∞	58′ 4″ ∞	83′ 4″ ∞

∞ = infinity

Table 2.1J.

Focal Length	Hyperfocal Distance at f: Stop Number										
	f:2	f:3	f:3.5	f:4	f:4.5	f:5.6	f:6.3	f:8	f:11	f:16	f:22
50mm (2″)	83′6″	55′6″	47′7″	41′9″	37′ 1″	29′ 9″	26′8″	20′11″	15′1″	10′6″	7′ 6″
90mm (3½″)	146′0″	97′3″	83′4″	73′0″	64′10″	52′ 0″	46′8″	36′ 6″	26′6″	18′3″	13′ 3″
135mm (5.3″)	229′3″	152′9″	131′0″	114′7″	101′10″	81′10″	73′6″	57′ 4″	41′9″	28′8″	20′11″

Table 2.1K.

$$\frac{(500)\cdot(600)}{1100} = \frac{300{,}000}{1100} = 272.7 \text{ inches or about } 22'8''.$$

The farthest limit of depth of field would be:

$$\frac{300{,}000}{500\text{-}600} = \frac{300{,}000}{\text{-}100} \text{ or infinity (Since answer is negative)}$$

This points up an important characteristic: When H is equal to d or less than d, the farthest limit of depth of field is at infinity. When H is greater than d, the farthest limit is finite, and will have a value related to the above formula.

For the convenience of the reader, a number of tables illustrating the subject under discussion is presented in the following pages. Table 2.1J presents the nearest and farthest depth of field limiting distances for various values of H and distances focused upon. It may be noted here again that as d becomes greater than H, the farthest limit of depth of field becomes infinite. Table 2.1K shows the hyperfocal distance for the most popular sizes of TV studio camera lenses at various f: stop openings. Tables 2.1L, 2.1M and 2.1N show the limits of depth of field for three of the most widely used lenses on studio setups.

Close study of these tables prove the points concerning focusing and depth of field discussed earlier. It was shown, for example, that the depth of field is greater beyond the focal point than in front. Observation of the Table 2.1N reveals that when the 5.3″ lens is focused at 50′ with a stop opening of f:8, the usable depth of field is from 26′9″ to 391′0″. Therefore, the field in front of

the focal point (50′) is approximately 23′, whereas the field beyond the focal point is about 341 feet. Close study shows that this characteristic is due to the hyperfocal distance characteristic of the lens system.

Another important item is the effect of "stopping down" a lens of given focal length on the depth of field. Observing Table 2.1M, it is noted that the 3½″ lens at stop opening f:3.5 focused at 10′, has a depth of field range from 8′11″ to 11′4½″, or about 2′5½″. Stopping the lens down to f:8 gives a limiting range at 10′, of 7′10¼″ to 13′9½″, or about 5′11¼″. Thus the effective depth of field is increased from 2′5½″ to 5′11¼″ at 10 feet by using a smaller stop opening.

In practice, the actual theoretical limits as given in these tables are flexible. Objects slightly out of the limits may still be within the limits of definition of the overall TV system. The operator, however, must be thoroughly familiar with such lens characteristics so as to know which type must be used for the "shots" called for during a studio production.

Depth of field varies as shown by the discussion thus far with focal length of lens as well as the stop opening. Fig. 2.10 shows this relationship graphically. The relative depths of field for three popular size (F) lenses are shown when focused at 20 feet with a stop opening (f:) of f:8. Also to be considered is the relative size of the resulting image, also shown in this illustration. Thus a shorter focal length lens may be seen to include a greater depth of field but the relative size of a given object is smaller in proportion.

Another factor affecting depth of field should be pointed out here. Observing again Table 2.1N, the 5½″ lens stopped to f:8 and focused at 20 feet, has a depth of field of a little over 15 feet. When this same lens, with the same f: number, is focused at 50 feet, the depth of field is almost 365 feet. Thus depth of field for any given lens will be increased by *moving the camera back* from the scene. Again, of course, the image size of any given object is smaller. The reader should thoroughly grasp these various relationships before proceeding with

Theoretical Limits of Depth of Field for Lenses of 50mm (2″) Focal Length

f:Number	Distance In Feet									
	2′	4′	6′	8′	10′	15′	20′	30′	50′	∞
f:2	1′11½″ 2′00½″	3′ 9¾″ 4′ 2½″	5′ 7⅛″ 6′ 5½″	7′ 3½″ 8′10″	8′11″ 11′ 4″	12′ 8″ 18′ 3″	16′ 1″ 26′ 4″	22′1″ 47′0″	31′3″ 125′0″	83′ 6″ ∞
f:3.5	1′11″ 2′ 1″	3′ 8¼″ 4′ 4½″	5′ 4″ 6′ 9½″	6′10″ 9′ 7½″	8′ 3″ 12′ 8″	11′ 5″ 21′11″	14′ 1″ 34′ 7″	18′5″ 55′0″	24′4″ ∞	47′ 7″ ∞
f:4.5	1′10¾″ 2′ 1⅜″	3′ 7¼″ 4′ 5¾″	5′ 2″ 7′ 2″	6′ 7″ 10′ 2½″	7′10½″ 13′ 8″	10′ 8″ 25′ 2″	13′ 0″ 43′ 5″	16′7″ 157′0″	21′3″ ∞	37′ 1″ ∞
f:6.3	1′10¼″ 2′ 2″	3′ 5¾″ 4′ 8½″	4′10¾″ 7′ 9″	6′ 2″ 11′ 5″	7′ 3¼″ 16′ 0″	9′ 7″ 34′ 3″	11′ 5″ 80′ 0″	14′1″ ∞	17′5″ ∞	26′ 8″ ∞
f:8	1′ 9⅞″ 2′ 2½″	3′ 4¼″ 4′11½″	4′ 8″ 8′ 5″	5′ 9½″ 13′ 0″	6′ 9″ 19′ 3″	8′ 8½″ 53′ 6″	10′ 2″ 500′ 0″	12′3½″ ∞	14′9″ ∞	20′10″ ∞
f:11	1′ 9¼″ 2′ 3¾″	3′ 2″ 5′ 5¼″	4′ 3½″ 9′11½″	5′ 2¾″ 17′ 0″	6′ 0″ 29′ 8″	7′ 6″ ∞	8′ 7″ ∞	10′0″ ∞	11′7″ ∞	15′ 1″ ∞
f:16	1′ 8⅛″ 2′ 5¾″	2′10¾″ 6′ 6″	3′ 9¾″ 14′ 2″	4′ 6¼″ 34′ 6″	5′ 1¼″ 250′ 0″	6′ 2″ ∞	6′10″ ∞	7′9″ ∞	8′7″ ∞	10′ 5″ ∞

∞ = infinity

Table 2.1L.

Theoretical Limits of Depth of Field for Lenses of 90mm (3½") Focal Length

f:Number	Distance in Feet								
	4′	6′	8′	10′	15′	20′	30′	50′	∞
f:3.5	3′9¾″ 4′2½″	5′ 7¼″ 6′ 5½″	7′ 3½″ 8′10″	8′11″ 11′ 4½″	12′8½″ 18′3″	16′ 1″ 26′ 4″	22′ 1″ 47′ 0″	31′3″ 125′0″	83′ 4″ ∞
f:4.5	3′9¼″ 4′3¼″	5′ 6″ 6′ 7¼″	7′ 1½″ 9′ 1½″	8′ 8″ 11′10″	12′2″ 19′6″	15′ 3½″ 28′11″	20′ 6″ 55′10″	28′3″ 218′6″	64′10″ ∞
f:6.3	3′8¼″ 4′4½″	5′ 3¾″ 6′10¾″	6′10″ 9′ 8″	8′ 3″ 12′ 9″	11′4″ 22′1″	14′ 0″ 35′ 0″	18′ 3″ 85′ 0″	24′2″ ∞	46′ 8″ ∞
f:8	3′7¼″ 4′6″	5′ 1¾″ 7′ 2¼″	6′ 7″ 10′ 3″	7′10¼″ 13′ 9½″	10′7½″ 25′5″	12′11″ 44′ 3″	16′ 5½″ 168′ 6″	21′1″ ∞	36′ 6″ ∞
f:11	3′5¾″ 4′8½″	4′10¾″ 7′ 9″	6′ 1¾″ 11′ 5½″	7′ 3″ 16′ ½″	9′7″ 34′7″	11′ 5″ 81′ 6″	14′ 1″ ∞	17′4″ ∞	26′ 6″ ∞
f:16	3′3⅜″ 5′1½″	4′ 6¼″ 8′11¼″	5′ 6¾″ 14′ 3″	6′ 5½″ 22′ 2″	8′3″ 84′3″	9′ 6½″ ∞	11′ 4″ ∞	13′4″ ∞	18′ 3″ ∞

∞ = infinity

Table 2.1M.

Theoretical Limits of Depth of Field for Lenses of 135mm (5.3") Focal Length

f:Number	Distance in Feet							
	6′	8′	10′	15′	20′	30′	50′	∞
f:4.5	5′ 8″ 6′ 4½″	7′ 5″ 8′ 8½″	9′1½″ 11′1″	13′ 1″ 17′ 7″	16′ 9″ 24′10″	23′2″ 42′3″	33′6″ 98′6″	101′10″ ∞
f:6.3	5′ 6½″ 6′ 6½″	7′ 2½″ 8′11½″	8′9½″ 11′7″	12′ 5″ 18′10″	15′ 8″ 27′ 6″	21′4″ 50′8″	29′9″ 156′6″	73′ 6″ ∞
f:8	5′ 5¼″ 6′ 8½″	7′ 0″ 9′ 3½″	8′6″ 12′1½″	11′11″ 20′ 4″	14′10″ 30′ 9″	19′9″ 63′6″	26′9″ 391′0″	57′ 4″ ∞
f:11	5′ 3″ 7′ 0″	6′ 8½″ 9′11″	8′1″ 13′2″	11′ 0″ 23′ 5″	13′ 6″ 38′ 6″	17′5″ 107′0″	22′9″ ∞	41′ 9″ ∞
f:16	4′11¾″ 7′ 7″	6′ 3″ 11′ 1″	7′5″ 15′3″	9′10″ 31′ 6″	11′ 9″ 66′ 3″	14′8″ ∞	18′3″ ∞	28′ 8″ ∞

∞ = infinity

Table 2.1N.

operational practice described in Chapter 6.

Remember in this connection that when a lens is stopped down to a higher f: number (smaller iris opening), the *image brightness* is reduced as the *square* of the f: number. Actually, the f: number is a ratio of lengths, ($f = \frac{F}{D}$,) whereas light passing properties depend upon area. Since the area (D) in the above equation is the denominator of the fraction, the smaller the value of f:, the greater is the quantity of light gathered. A lens mount is usually marked off in f: number values so that traveling from one figure to the next cuts the amount of light passed by one-half. Thus if f:2 is the maximum aperture, the next value

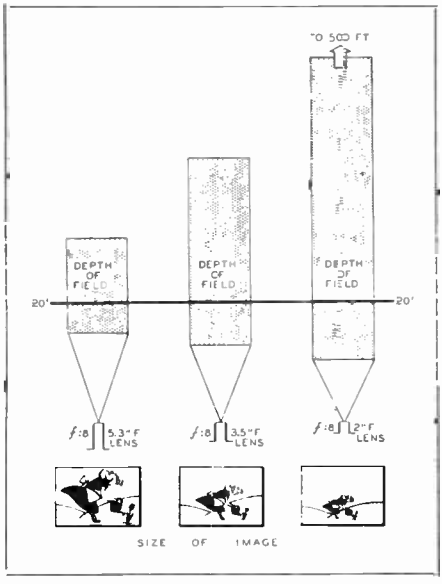

Figure 2.10. Effect of focal length on depth of field and comparative image size.

is usually f:2.8, where the transmitted light is halved. The next value is usually f:4, where the light is again halved, or is only one-fourth the amount transmitted by the f:2 opening. Another way of saying this is that an f:2 lens transmits 4 times as much light as an f:4 lens. Since the difference between f:2 and f:4 is 2, it may be seen that image brightness is related to the *square* of the f: number ratio.

Thus available lighting in the studio or in the field is a limiting factor as to how a lens may be stopped down in practice. Lighting in the studio is usually ample and well controlled. Field events pose a greater problem in this respect.

Television lenses are of the bayonet base type to facilitate interchanging them, when required, with minimum time. A lens turret holds four lenses of various sizes, so that the turret may be rotated in a matter of seconds to change the operating position so that a different lens may be used. This is accomplished by squeezing the large handle on the rear of the camera head, and rotating it to the desired position. An arrow is usually engraved on the turret handle indexing plate, and points to four "lens identification spaces" on the masking ring. These spaces provide a means for the operator to pencil-in the type of lens mounted in that particular position.

Optical focusing (relative distance of lens to photocathode surface in image orthicon), is accomplished by turning a knob on the side of the camera. Some cameras have focussing knobs on both right and left side for convenience. Others have the knob only on the right-hand side. This knob does not move the lens at all. The distance is varied by moving the image orthicon tube and its associated yoke (deflecting and alignment coils) on two tracks upon which the assembly slides back and forth. This facilitates the use of the lens turret, since complicated mechanisms would be required with a turret to move the actual lens in and out when mounted upon the turret.

Most cameras, especially of the studio type as distinguished from the field or portable type, have facilities for adjusting the iris opening (f: number) from the rear of the camera.

While on the subject of the lens, it should be mentioned that no lens has a 100% light passing characteristic. An efficiency of 70 to 75% is average for the TV type lens. The "lens barrel" in which the lens is mounted must be dark since any reflection here would result in severe distortions, destroying the ability of the lens to define the scene. Practically all TV lenses are fluoride coated to prevent internal reflections and thereby increase the efficiency of transmitting light through the lens structure (Section 1.1, Chapter 1).

Due to the spectral response of some image orthicon tubes, as discussed later in this chapter, extending well into the ultra-violet or infra-red range, it is necessary to use corrective filters in front of a lens to provide proper rendition of visible shades from black to white. A lens-adapter ring is used in this case with a filter such as Wratten No. 6 placed immediately in front of the lens. Such filters reduce the sensitivity about one-half. This is actually no problem as

Figure 2.1P. Dr. Frank G. Back, inventor of the Television Zoomar Lens, the Video Balowstar, the 40-inch Reflectar and the Video Analyzer, testing c 40-inch Reflectar Lens now used extensively for remote pickups of baseball, football, horse racing, soccer, aviation, parades, etc. Courtesy Back Video Corporation.

a general rule, since the image orthicon is so sensitive that sometimes out-of-doors in brilliant sunlight, it is impossible to stop the lens down far enough to keep from saturating the photocathode. Wratten neutral filters are often used in this case, with transmission factors of only 10 to 20% to reduce the intensity of illumination.

Lenses of 13" and longer focal length are termed *telephoto* types. It is the purpose of such a lens to bring "close-ups" of objects at relatively great distances from the camera. They are extremely popular for field events and are often used indoors where distances of 20 to 50 feet and longer are involved in the telecast. The image of the object upon which the lens is trained is made large by sacrificing vertical and horizontal fields covered, and depth of focus.

A telephoto lens seldom has a built-in iris. Usually such a lens employs a lightweight "Waterhouse" type fixed stop of f:8, f:11 or f:22 aperture, easily interchanged manually. An f:5.0 stop is maximum for most telephoto designs. Fixed stops for telephoto applications present no great operational problems, since the image orthicon is adaptable over a wide range of light intensities by proper electrical adjustments.

The use of the longer telephoto lens on a lens turret precludes the use of other shorter lenses on the same turret, since it comes into the angle of view of a shorter lens. An unusual lens in this respect, and one that at first thought is

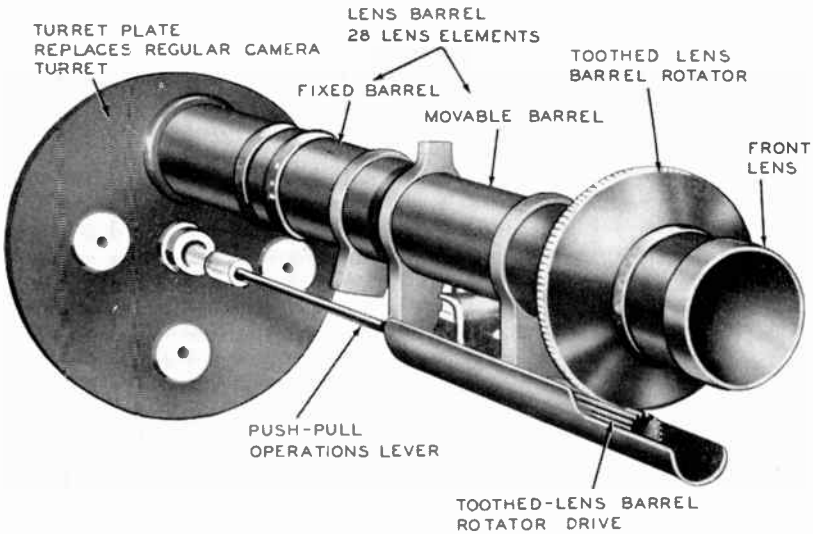

Figure 2.1Q. Zoomar Lens. Courtesy Back Video Corporation.

fantastic, is the Reflectar, invented by Dr. Frank G. Back, noted optical scientist. Up until the development of the Reflectar, a lens of 40″ focal length would necessarily be at least 40 inches long. Yet this lens, although it is of 40″ focal length, is actually only 16 inches long, and contains no lens at all! It is capable of being mounted upon the regular camera turret, with the other three lenses mounted as usual.

The Reflectar is illustrated in Fig. 2.1P, along with the inventor, Dr. Back, President of the Back Video Corporation. At the front of the "lens" housing may be noted a rotatable damper which may be adjusted to give an f:8 to f:22 stop opening. As stated above, this instrument does not employ a single lens in its construction. Four special type reflectors "bounce" the entering light beams back and forth in such a manner as to obtain high magnification. An object 5 feet high and more than a block away from the lens may be made to completely fill the monitor screen. The Reflectar is used at distances greater than 70 feet, and is effective at 1000 feet or more. It may be readily realized that such a device finds optimum application in sporting events of all kinds.

There are only four main elements to this device other than the damper and housing. Light first enters an element known as the correction-plate, which is a mirror-reflector shaped in the form of a segment of a large sphere. From the correction plate the light is picked up by the three aluminized flat mirrors and bounced between them in such a manner as to obtain large optical magnification, then reflected onto the image orthicon photocathode. This "lenseless lens" is capable of high resolving power and does not limit the total definition in any way.

Another special type of telephoto lens was also invented by Dr. Back and is known as the *Zoomar* lens. This lens is shown in Fig. 2.1Q. The focal length (and therefore picture area covered) may be changed at will *while in operation* by means of a single push-pull lever operated directly through the turret shaft of the camera. The operator may vary the covered area slowly and almost imperceptibly or suddenly in order to follow a ball in flight. This lens is used in studios but has found greatest application in outdoor sports events. The main limiting factor in the use of the Zoomar is available light; the lens requires a greater intensity of illumination than other telephoto lenses popular for field events.

The Zoomar has two main Focal length ranges 3 to 13 inches and 5 to 22 inches. It features continuously variable F over these limits. Since it is 30″ in length, the lens mounts upon a special turret without other lenses. The f:speed may be varied from f:5.6 to f:22. When using a focal length above 12″, it is recommended that the widest stop used be f:8. Either range of F may be stopped down to f:22 when desired. According to the Back Video Corporation, when the lens is stopped to f:16, there is no appreciable difference in definition between the Zoomar and a good single purpose lens. At f:11, the definition is equal to about 90% that of a good single purpose lens; at f:8, the definition equals about 80%. Used wide open at f:5.6, the definition is equivalent to about 75% that of a good single purpose lens. It has been found that the Zoomar works best when used with an image orthicon practically free of infra-red response, such as types 5820 and 5826.

The two main focal length ranges mentioned above are accomplished by using the specified "front lens." The "wide-angle" front lens allows the 3″ to 13″ F range, and the "tele-front" lens allows the 5″ to 22″ F range.

The complete mounting and adjustment procedures are given in Chapter 9 on Operating Field Equipment.

2.2 *The Image Orthicon Pickup Tube*

There are several type numbers of image orthicons, varying in sensitivity, spectral response, and operating characteristics. All of them, however, are interchangeable in the TV camera. Exceptions, of course, are the special types designed for miniature industrial circuits and other non-broadcast applica-

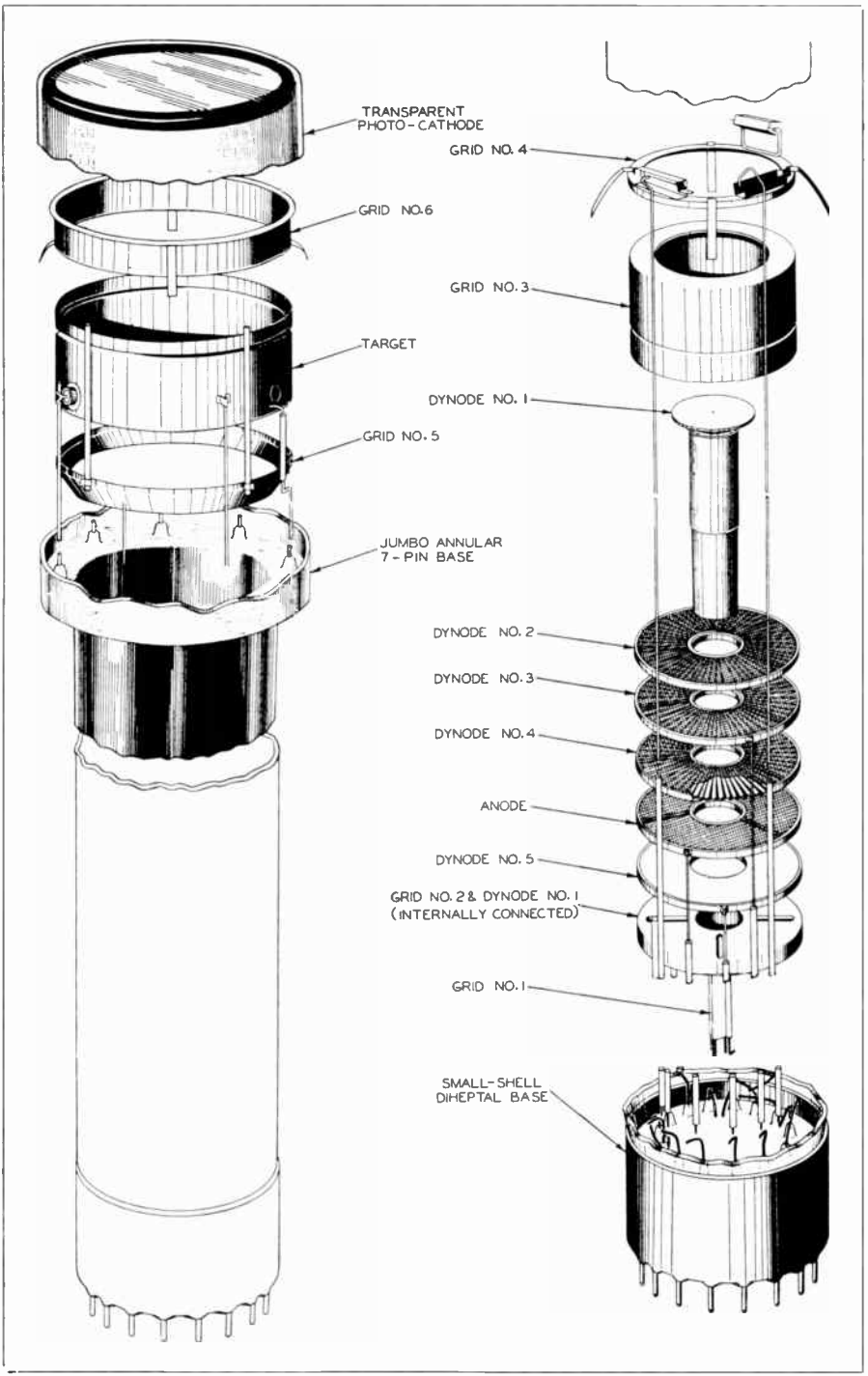

Figure 2.2. RCA Type 2P23 Orthican (Drawings from sample. Courtesy RCA).

tions. Fig. 2.2 illustrates the physical construction of the Type 21'23 image orthicon tube, popularly used in field cameras for out-of-doors pickups.

Fig. 2.2A shows details of the Type 5820 image orthicon. It may be observed that such a tube has two pin bases; the keyed 7-pin base around the outer rim at the back of the front projection of the tube, and the small-shell 14-pin base at the end of the electron gun. The "keyed jumbo annular" 7-pin base fits into the socket which is part of the deflecting coil assembly in the camera. The 14-pin socket, or end-base pins, fit into the diheptal socket at center of the coil assembly to the rear of the camera. Tube mounting details and methods of adjustments are described in Chapter 6 on Operational Technique.

An image orthicon tube consists of a heater, cathode, 6 grids, 5 dynodes, 1 anode, a photocathode, and a target. These components will be defined immediately, then each section of the tube will be described as to function in the following sub-parts of this section.

Grid 1 is the control grid, and immediately surrounds the emitting cathode of the electron gun. The potential on grid 1 therefore serves to limit and control the *beam current*.

Grid 2 is next to grid 1, and is termed the accelerating grid. The potential on grid 2 sets the velocity at which electrons leave the cathode.

Grid 3 acts upon the return beam. Grid 3 potential controls electron collection of dynode No. 2, and is adjusted in practice for optimum picture quality.

Grid 4 creates an electrostatic field which, in conjunction with current passing through the focusing coil to form an electro-magnetic focusing field, causes the electron beam to be focused upon the rear of the target.

Grid 5 is termed the decelerator grid. The potential on this grid serves to ad-

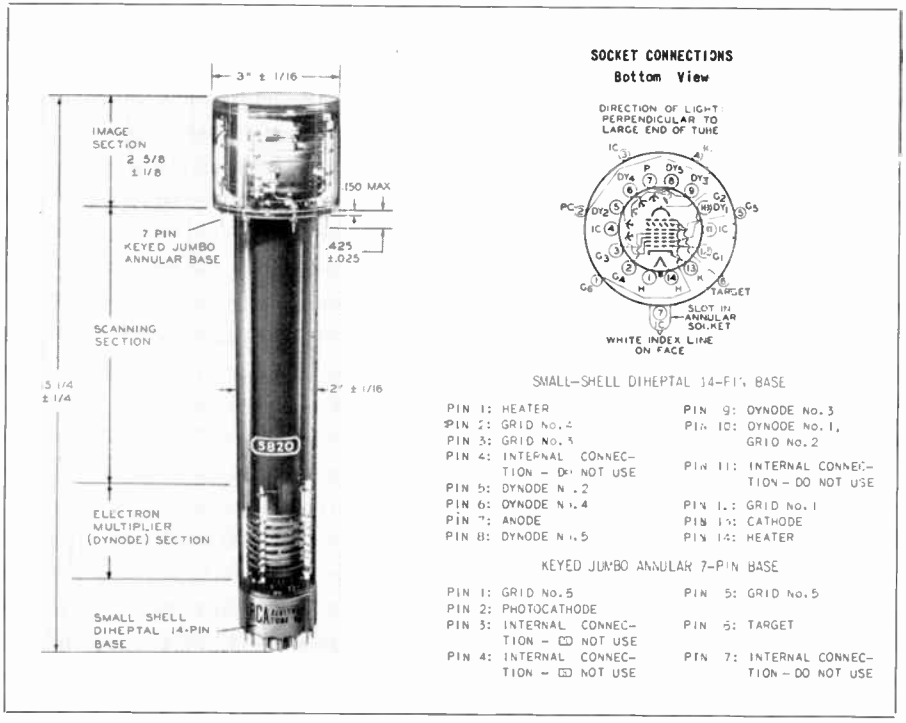

Figure 2.2A. Showing the two bases of an image orthicon tube and the physical dimensions. Also bottom view of sockets connections. Courtesy RCA.

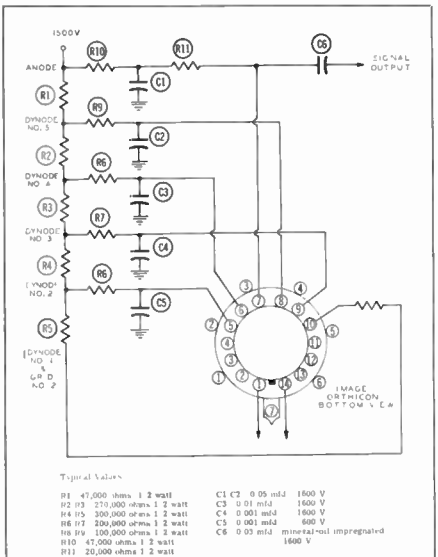

Figure 2.2B. Typical dynode circuits of image orthicon tube.

just the shape of the decelerating field between the target and grid 4 to obtain uniform electron bombardment of the entire target area. Its potential is low (+ 25 V) so that the forward beam is slowed down sufficiently to prevent the beam itself from producing secondary electron emission of the target.

Grid 6 is in the image multiplier section at front of tube, between the photocathode and target, and is termed the accelerator grid. The potential on this grid serves to accelerate the incident photo-electrons from the rear of the photocathode over to the face of the target.

The photocathode and target have already been basically described in section 1.2, Chapter One.

It now remains to define the basic functions of the dynodes in the image orthicon pickup tube. A dynode is capable of producing secondary electrons with high efficiency. It is recalled that the return beam which is modulated by the corresponding charge on the target at that particular scanning instant, is fed to an electron multiplier section before being impressed across the output resistor of the anode circuit. The simplified schematic of Fig. 2.2B shows the connections of the dynode multiplier section. The return beam first impinges on dynode 1, which is the first dynode of the five-stage electrostatically focused multiplier. The multiplied electron beam then strikes dynode 2, and so on through the following stages to the anode. The modulated beam is thus amplified some 500 times before reaching the anode.

It should be remembered from section 1.2, Chapter One, that less positive portions of the target correspond to dark portions of the scene, and more positive points correspond to the lighter points of the scene. Thus at the time of scanning the highlights of the scene, more electrons are robbed from the beam to neutralize the charge on the target, and the return beam is *decreased* in amplitude. This action causes the signal output voltage across R11 in Fig. 2.2B to change in the *positive* direction (less voltage drop across the load resistor). Thus the grid of the first video preamplifier stage swings in the positive direction for light portions of the scene and in the negative direction for dark portions of the scene. This is known as "black-negative" polarity.

For the convenience of the reader and for future references in this text, the typical operation values for the various types of image orthicon tubes are given in the table of Fig. 2.2C. It may be observed that slight differences in typical voltages of dynodes and anodes exist, with most of the voltages and currents being the same for all types.

The major difference between image orthicon tubes is the sensitivity rating and spectral response. For example the sensitivity values are as follows:

Type 2P23: Highlight illumination on photocathode for maximum output:

with 2870° K Tungsten illumination or daylight:	0.07 ft-c
with white fluorescent illumination:	0.15 ft-c

TYPICAL OPERATION AND CHARACTERISTICS

	2P23 Type	5655 Type	5820 Type	5826 Type
1. Photocathode Voltage (Image Focus)	—300 to —500 volts	—300 to —500 volts	—300 to —500 volts	—300 to —500 volts
2. Grid No. 6 Voltage (Accelerator) 80% P. C. Volts	—240 to —400 volts	—240 to —400 volts	—240 to —400 volts	—240 to —400 volts
3. Target Voltage*	0 volts	0 volts*	0 volts*	0 volts*
4. Grid No. 5 Voltage (Decelerator)	0 to 100 volts	0 to 100 volts	0 to 100 volts	0 to 100 volts
5. Grid No. 4 Voltage (Beam Focus)	160 to 240 volts	160 to 240 volts	160 to 240 volts	160 to 240 volts
6. Grid No. 3 Voltage	225 to 330 volts	225 to 330 volts	225 to 330 volts	225 to 330 volts
7. Grid No. 2 (Dynode No. 1) Voltage	300 volts	300 volts	300 volts	300 volts
8. Grid No. 1 Voltage (for picture cut-off)	—45 to —115 volts	—35 to —100 volts	—45 to —115 volts	—45 to —115 volts
9. Dynode No. 2 Voltage	600 volts	600 volts	600 volts	600 volts
10. Dynode No. 3 Voltage	880 volts	800 volts	880 volts	800 volts
11. Dynode No. 4 Voltage	1160 volts	1000 volts	1160 volts	1000 volts
12. Dynode No. 5 Voltage	1450 volts	1200 volts	1450 volts	1200 volts
13. Anode Voltage	1500 volts	1250 volts	1500 volts	1250 volts
14. Anode Current	50 microamperes	100 microamperes	50 microamperes	50 microamperes
15. Target Temperature Range	35 to 60 degrees C.	45 to 60 degrees C.	35 to 60 degrees C.	45 to 60 degrees C.
16. Minimum Peak-to-Peak Blanking Voltage	10 volts	10 volts	10 volts	10 volts
17. Focusing Coil Current (approx.)	75 milliamperes	75 milliamperes	75 milliamperes	75 milliamperes
18. Deflecting Coil Current (approx.):				
Horizontal (Peak-to-Peak)	625 milliamperes	625 milliamperes	625 milliamperes	625 milliamperes
Vertical (Peak-to-Peak)	290 milliamperes	290 milliamperes	290 milliamperes	290 milliamperes
19. Alignment Coil Current (approx.)	0 to 30 milliamperes	0 to 30 milliamperes	0 to 30 milliamperes	0 to 30 milliamperes

*Adjustable from —3 to +5 volts.

Table 2.2C.

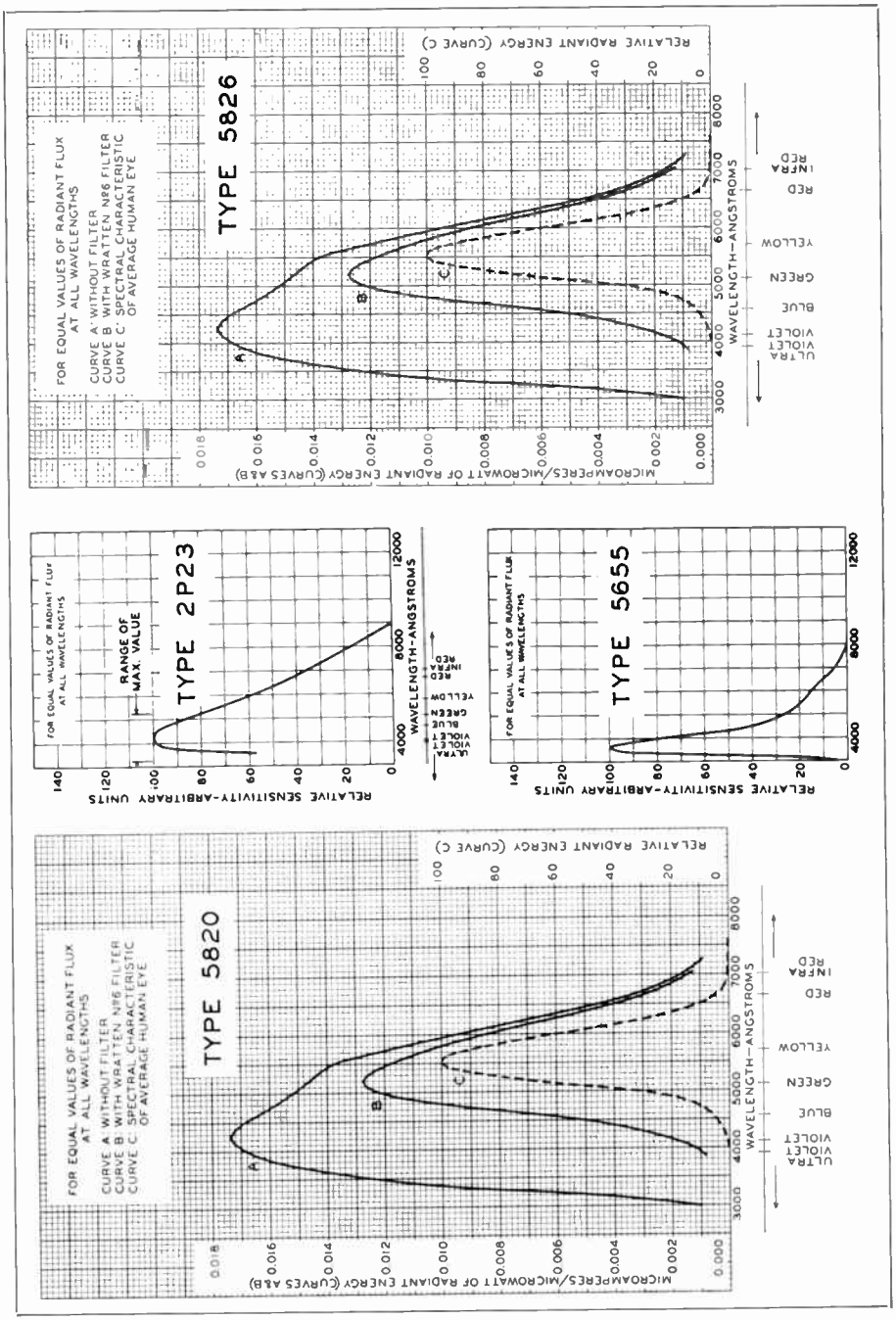

Figure 2.2D. Spectral sensitivity curves for 4 types of image orthicon pickup tubes. Curve "C" for types 5820 and 5826 tubes shows the spectral characteristics of the "average" human eye. Curve "A" is the average spectral response of the naked pickup tube (no corrective filters). Curve "B" shows the spectral response when a Wratten No. 6 filter is used with the lens system. This curve very closely approaches that of the human eye. Courtesy RCA.

Type 5655: Highlight illumination on photocathode
for maximum signal output:
using "Daylight" fluorescent lamps: 0.3 ft-c

Type 5820: Highlight illumination on photocathode
for maximum signal output:
with 2870° K Tungsten illumination, daylight, or white fluorescent: 0.01 ft-c

Type 5826: under same lighting as above: 0.04 ft-c

The spectral sensitivity and response curves are shown in Fig. 2.2D.

In the following subsections, each principle part of the image orthicon pickup tube is described in detail.

The Image Section

Reflected light from the scene being televised is gathered by the lens, transmitted through the face plate of the image orthicon, and optically focused upon the *photocathode*. The basic action is illustrated in Fig. 2.2E.

The photocathode is a semi-transparent, photo-sensitive surface. This means that when light rays strike the front surface, electrons, called photo-electrons, are caused to be released from the back of the surface. These released electrons are in proportion to the intensity of the light striking the area.

Using the data given in the previous section as to sensitivity of various types of tubes used for image pickup, the reader may see at this point the relationship of the tube used to the required amount of lighting in the studio or field. As an example, the Type 5820, which is of exceptional sensitivity, requires only 0.01 foot-candles of light on the photocathode to obtain maximum signal output. It is apparent that sufficient illumination must be present in the scene to give this amount of light onto the photosensitive surface if maximum performance is to be achieved.

The amount of illumination reaching the photocathode is related to the actual scene illumination as follows:

$$I_s = \frac{(4f^2)\,(I_{pc})\,(m+1)^2}{T \times R}$$

where: I_s = scene illumination in foot-candles
f = f: number of lens
I_{pc} = photocathode illumination in foot candles
m = linear magnification from scene to target
T = total transmission of lens
R = reflectance of principal subject in scene

This is not as complex as it appears at first glance. The linear magnification (m) may be neglected except for extreme close-ups. Assuming we are using the 5820 tube with a lens stopped to f:8, having a transmission (T) of 70%. Assume also that we are televising a test card composed of blacks and whites, where we may take the reflectance value (R) at 50%. Since we should allow some safety margin, a photocathode illumina-

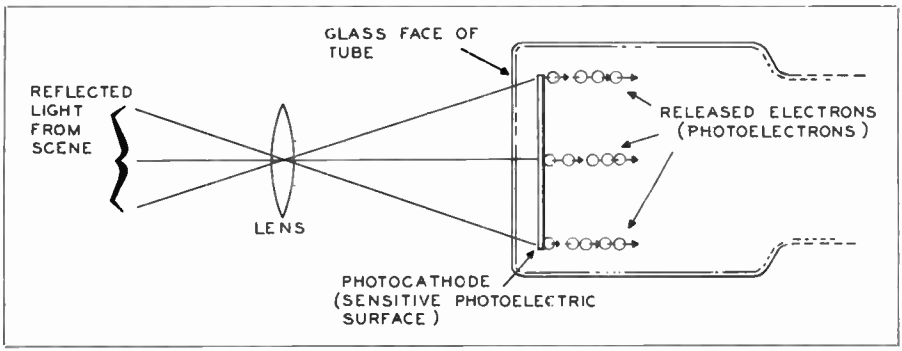

Figure 2.2E. Image section of image orthicon pickup tube. When light rays strike the photocathode, photo-electrons are caused to be released from the rear of the surface. These electrons are in proportion to the intensity of the light striking the area.

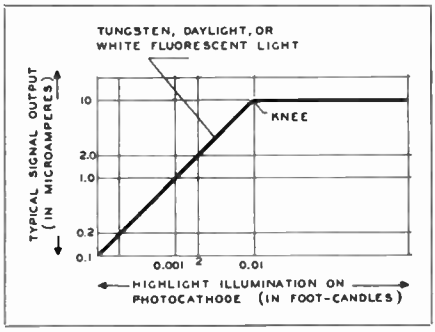

Figure 2.2F. Typical signal output of type 5820 image orthicon. In practice, the circuits are operated so that the highest highlights of the scene being televised brings the image orthicon just above the "knee" of the operating curve. Thus, in the operating range, an exact replica (in amplitude) of output signal is obtained of the light striking the photocathode, and good contrast is obtained. Compare this to class "A" amplifier operation in conventional radio theory, with this important difference: the scales are logarithmic, corresponding to the response of the human eye.

tion of 0.02 foot-candles (instead of 0.01) in the calculations. Therefore the theoretical intensity of scene illumination should be:

$$I_s = \frac{4 \times 8^2 \times 0.02}{0.70 \times 0.50} = \frac{5.12}{0.35} = 14.6 \text{ ft-c}$$

Thus 14.6 foot-candles would be required for the test chart. (Actually there are other factors here as will be analyzed in Chapter 6). Also, the reader must realize that for scenes where principle subjects may have reflectance values much lower, the intensity of illumination required for the pickup would be correspondingly higher.

In practice, the image orthicon is operated so that the highest highlights of the scene being televised brings the tube just above the "knee" of the operating curve. Fig. 2.2F illustrates a typical curve (ratio of typical output signal in microamperes to photocathode illumination), and shows the "knee" of the curve often referred to in manufacturers instructions. It is seen that over the operating range of the curve, an output directly relative to the photocathode illumination is obtained. This may be compared to a class "A" amplifier curve in conventional amplifier theory, with this important difference: the scales upon which the linear portion of the curve occurs are logarithmic, corresponding to the response of the human eye.

The Image Multiplier Section

The image multiplier section consists of the photocathode described in the previous section, an "electron lens system" consisting of the electromagnetic field from the focusing coil and the electrostatic field of the accelerator grid, and a target. See Fig. 2.2G. The photocathode is approximately 1.6″ across the diagonal. The target is a very thin glass disc with an extremely fine wire-mesh screen closely spaced to it on the photocathode (face) side.

When the photoelectrons are released from the back of the photocathode by the incident light rays from the lens, they enter the electromagnetic and electrostatic fields of the electron lens system. Focusing (as distinguished from optical focusing of the lens) of the electron beam is accomplished by the focusing coil current. The accelerator grid No. 6 provides the accelerating field.

Typical operating potentials are: photocathode, –400 volts, accelerator grid, –320 volts, target voltage approx. 0, and the target screen at ground potential or slightly negative. Therefore the photoelectrons are accelerated with about 400 volts by the time they pass

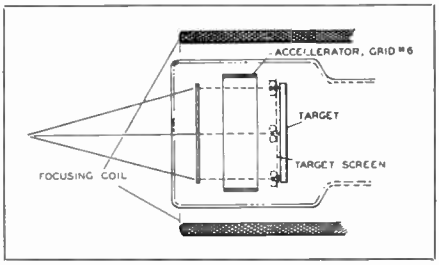

Figure 2.2G. The released photoelectrons from the photocathode are accelerated, by about 400 volts, to the target. Secondary electrons are emitted from the glass target by an amount depending upon the intensity of the photoelectrons at that point, and collected by the wire screen at the face of the target. At points on the target where this occurs, a deficiency of electrons results, leaving the point positively charged.

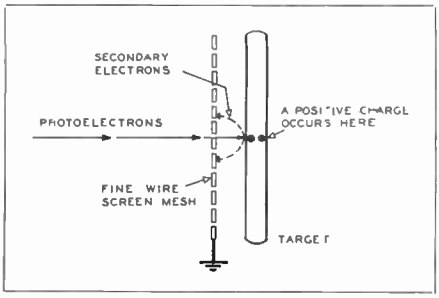

Figure 2.2H. Showing the action of the target as secondary electrons are bounced out of the glass. Since that point is deficient in electrons due to this release, the point becomes charged with a positive potential. Therefore, the corresponding point at the rear of the target becomes charged positive, since electrons rush to the front to the positive charge there.

through the fine wire screen to hit the target. Upon striking the target, secondary electrons are emitted from the glass target and these secondary electrons are collected by the adjacent wire screen.

Fig. 2.2H shows what occurs when a beam of photoelectrons strike a point on the glass target. The secondary emission of electrons at that point may be considered to be attracted to the screen and passed off to ground. This leaves that point of the target deficient in electrons, therefore positively charged. Since electrons from the back of the target will be attracted to the front to neutralize this electron deficiency, the corresponding point on the back of the glass will become charged positively. Thus it is evident that the extent of the charge at any point on the target will depend upon the intensity of the photoelectrons striking that point, becoming more positive as the light intensity is increased.

The Scanning Section

Elements comprising the scanning section are illustrated in Fig. 2.2I. The electron gun is conventional, of the type found in cathode ray tubes. The emitted electrons are formed into a beam by the combined action of the focusing coil, and grids 2, 4 and 5. Grid 3 has little effect on the forward motion of the beam, but acts upon the return beam as described later.

As the beam of electrons are caused to focus upon the rear of the target by the above action, control pulses (scanning sawtooth) applied to the Horizontal and Vertical deflection coils cause the beam to sweep across the target in accordance with the prescribed standards. (Sections 1.5 and 1.10, Chapter One). If no positive charge exists at the target (lack of light, or black portions of the scene), the electron beam will be repelled by the ground potential (or slightly negative potential) of the target. Therefore the entire beam of electrons will be returned in the form of a return beam which is equal to the forward beam. When a portion of the target is positive (corresponding to a light portion of the scene), some of the electrons of the beam will be extracted to neutralize the positive charge at that point. Naturally, the greater the positive

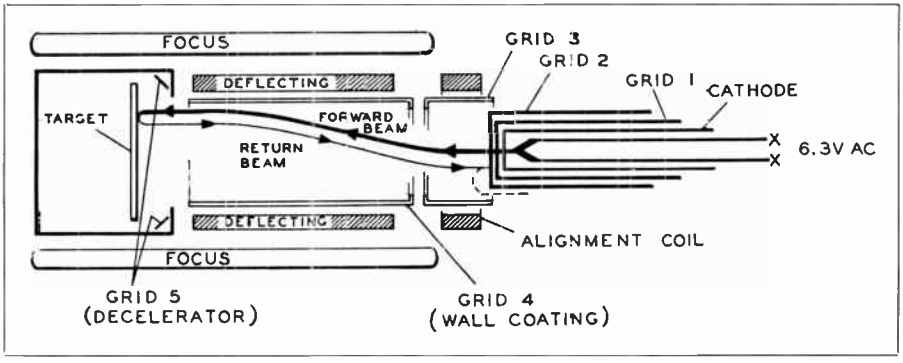

Figure 2.2I. Scanning section of image orthicon pickup tube.

charge (the lighter the scenic point), the more electrons extracted from the beam. Thus the return beam from the rear of the target is amplitude modulated in accordance with the corresponding light variations of the original set-up before the camera lens.

The H & V deflection coils through which the deflection currents pass are located *within* the long *focusing* coil which extends almost the full length of the image orthicon. The *deflection* coils extend only along the scanning portion of the tube, and are prevented from affecting the image section by a metal shield oriented about the target section. The alignment coil shown at the gun end of Fig. 2.2I creates a transverse magnetic field which serves to impart an initial alignment to the electron beam, allowing exact control for any slight irregularities of alignment between gun and target, between different tubes.

The Electron Multiplier Section

The sensitivity of the image orthicon as compared to earlier types of pickup tubes is due both to the image multiplier section, described earlier, and the electron multiplier action now to be described. The essential components of the electron multiplier section are shown by Fig. 2.2J.

As the modulated electron beam from the rear side of the target starts its return journey, it re-enters the field of grid 4 which, it should be noted, is a wall coating along the tube held at a potential of approximately 120 volts. Therefore by the time it enters the field of grid 3, the beam has a tendency to spread, which is called fringing. In so doing, it strikes the surface of grid 2, which is also the No. 1 dynode. A dynode is coated with material of high secondary electron emitting characteristic, and for each electron striking its surface, emits several additional electrons. Dynodes actually consist of flat vanes inclined at an angle of 40 degrees to the axis of the structure. Fig. 2.2K shows an approximate representation of a dynode. The screen is used to prevent distortion of the electrostatic field by the dynode vanes. These vanes radiate from the center of the tube much like spokes of a wheel.

The electrons released from dynode 1 enter the field of grid 3, and the accelerating field of dynode No. 2. Grid 3 provides a more complete collection by dynode 2 of the released electrons. The acceleration through the five stage electrostatically focused multiplier may be more clearly understood by observing typical operating voltages of, for example, the Type 5820 image orthicon. Dynode voltages are as follows:

Dynode 1 (grid 2) ..	300 volts
Dynode 2	600 volts
Dynode 3	880 volts
Dynode 4	1160 volts
Dynode 5	1450 volts
Anode voltage	1500 volts

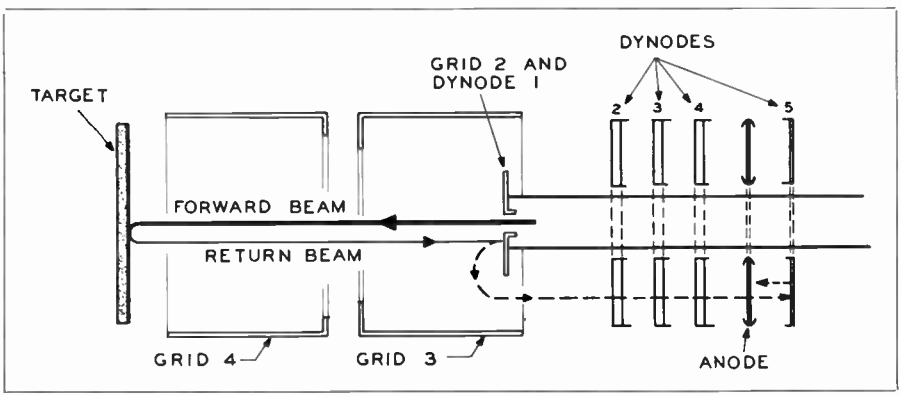

Figure 2.2J. Simplified diagram of dynode section of image orthicon pickup tube.

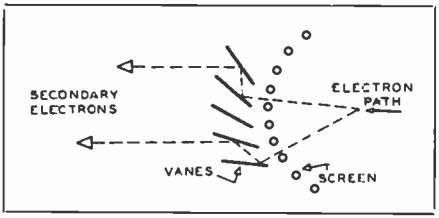

Figure 2.2K. Structure of dynode vanes and illustration of electron path.

The much amplified return beam current from the final dynode No. 5 is attracted to the anode which serves as the signal plate for the pickup tube. Useful signal output current of several microamperes through the load resistor is obtained, and picture "noise" is dependent only upon the actual "shot effect" of the electron beam itself. Signal output is well above the noise level of the input preamplifier stage.

Image Orthicon Operating Temperatures

The electrical resistivity of the glass target is affected by temperature. The extreme ranges of operating temperature are approximately 35 to 60 degrees *centigrade*. The optimum temperature is in the neighborhood of 45 degrees. 45 degrees centigrade is 113 degrees fahrenheit. ($tf = 1.8\ t_c + 32$). When the temperature is too low, the electrical resistivity is higher than at proper temperature, hindering the transference of electrons to the screen. This results in the so-called "sticking picture" of opposite polarity from the original upon movement of the televised object. When the temperature is too high, the electrical resistivity is decreased to the point where loss of resolution occurs, since random electrons travel too easily from point to point of the atomic regions. Permanent damage may result to the target with high temperature.

Temperature control of a television camera tube used in studios is provided by a cooling blower, since heat from the coils and tubes is sufficient to bring the operating temperature high enough, and the cooling air then provides the necessary control. In cases where the camera is used out of doors in cold weather, such as a football game, a target heater may be necessary to bring the temperature up to normal value. This heater fits between the focusing coil and the bulb near the shoulder of the tube. The cooling blower directs air along the bulb surface. The cooler is seldom needed in ordinary studio applications, but is sometimes required when used in direct sunlight or in particularly hot locations.

In practice, a very close approximation may be made of target temperature by measuring the temperature of the glass bulb adjacent to the target. This temperature will be essentially the same as that of the target.

2.3 *Circuits for the Image Orthicon*

Fig. 2.3A illustrates the Du Mont television camera with side doors open. The top section constitutes the electronic viewfinder, and is detachable from the lower section. The lower assembly is the *pickup head*. The lower section contains the image orthicon tube and associated coils (H and V deflection, focusing, and alignment coils), the video preamplifier, H and V deflection amplifiers (sweep circuits), and the blanking circuits.

For the purpose of making this analysis as practical as possible, a typical commercial camera circuit will be described. Although circuits vary between different manufacturers, the same principles are carried out. The camera described herewith is the Du Mont Type 5098-A pickup head, illustrated in Fig. 2.3A.

Fig. 2.3B is the complete schematic diagram of the connections made directly to the image orthicon tube. The Type 2P23 is shown, but any of the broadcast type image orthicon tubes may be used with proper voltage adjustments.

It should be remembered that the pickup tube (designated as V98-1 in the diagram), has two base-pin terminals; the 7-pin annular terminations at the rear of the image section, and the smaller 14-pin diheptal base-pins at the extreme end of the tube (the electron gun end). These

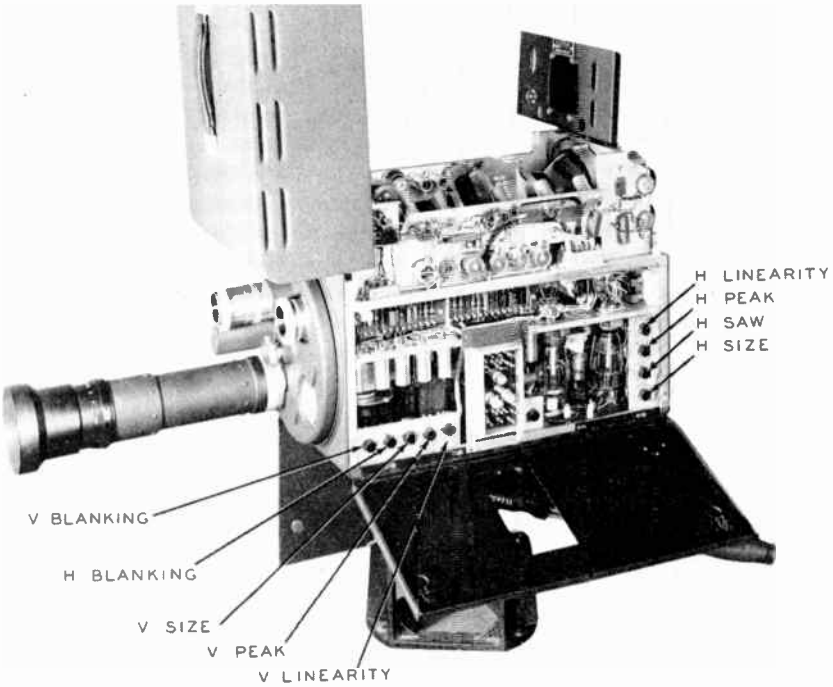

Figure 2.3A. DuMont type 5098-A Television camera. The upper section is the electronic viewfinder described in the next section. The lower section is the pickup head. This contains the image orthicon tube (not visible), the video preamp, H and V deflection generators and H and V blanking generators. Image orthicon controls may be seen along the lower left-hand corner of the photo and vertically along the right edge. These controls are discussed in the text. Courtesy DuMont.

end base-pins fit into a diheptal 14-pin socket at the center of the coil assembly, the 7-pin base slides into a keyed jumbo annular 7-pin socket which is part of the deflection yoke assembly. The tube is installed by inserting the 14-pin end base through the coil assembly and then turning the tube until the annular base pins (keyed by pin No. 7) can be inserted in the annular socket at the rear of the deflection yoke. These pins may then be pushed into their socket, which also fits the 14-pin base into its respective socket. When properly installed, a white line which is on all pickup tubes on the front of the tube will be at the bottom, and another white line on the rear of the tube will be on top. This is standard in all makes of TV cameras.

Details of installation and setup of the entire assembly are given in Chapter 6. It is necessary, however, at this point to become acquainted with the actual electrical circuits. Electrical adjustments are also described in Chapter 6. Such adjustments, of course, would be meaningless unless the operator is familiar with the actual circuitry, which is the subject now under consideration.

Note first the pin terminals at the 7-pin annular socket of the 2P23 in Fig. 2.3B. Pin PC is the photocathode connection, and runs to terminal A of the diagram. This terminal receives its voltage from the "PC Focus Control" on the camera control unit in the control room. It is a negative potential, adjustable in the control unit from —250 to —440 volts. Resistor R98-36 and capacitor C98-11 serve to by-pass stray signals picked up by the runs of interconnecting cables. Pin G6 is the image accelerator

electrode (grid No. 6), whose voltage is fixed, by the resistors in the lead shown, to approximately 80% of the photocathode voltage. (See typical operation values of image orthicon tubes, section 2.2). Pin T is the target mesh, the shielded lead running to terminal E on the diagram. This terminal receives voltage from the "Target Voltage Control" on the camera control unit in the control room. This voltage is within a few volts plus or minus of ground reference. The voltage lead wire up to the target pin must be well shielded to prevent possible pickup from the sweep fields. The remaining pin of the 7-pin annular base which uses external connections (two pins on this socket are internally connected) is Pin G5. This pin is connected to the beam decelerating electrode Grid No. 5. The voltage to this terminal may be varied from 0 to plus 100 volts, the average setting being about 25 volts. Resistor R98-34 sets this voltage, and is adjusted at the camera.

We may now progress to the pin connections which constitute the 14-pin diheptal base end. Pin 12 is grid No. 1, and the lead wire runs to terminal B on the diagram. This connects to the "Beam

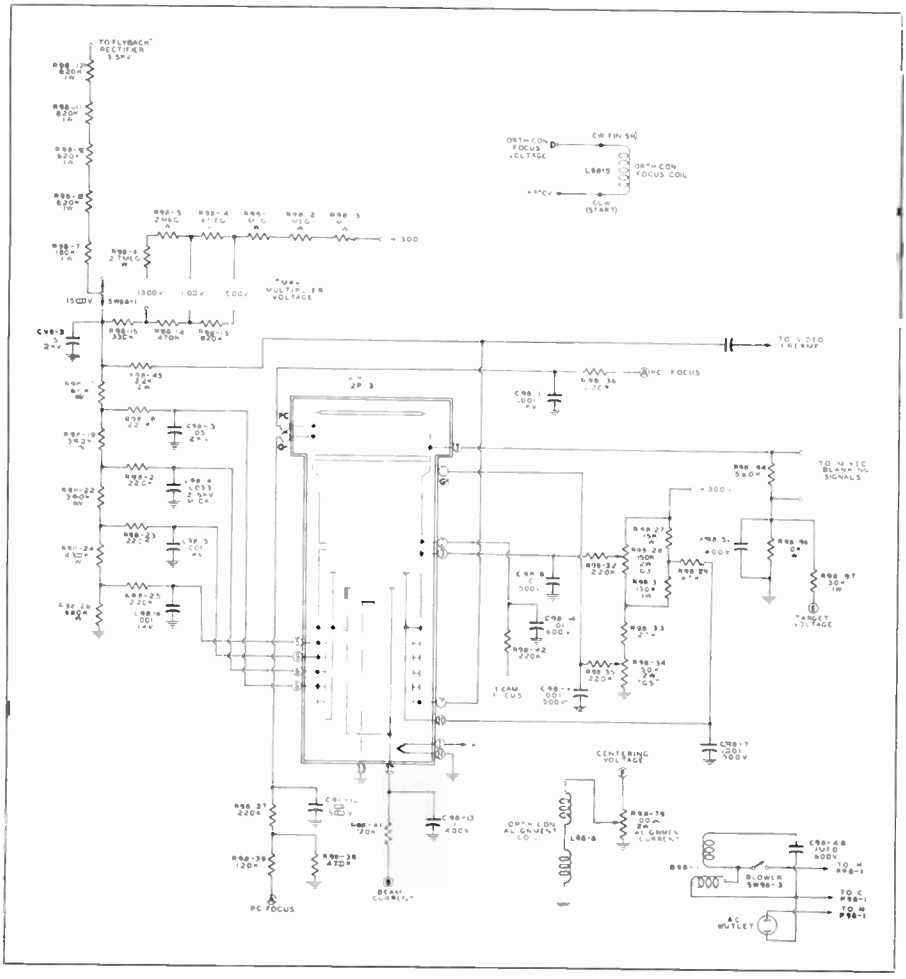

Figure 2.3B. Image orthicon circuits, DuMont TV camera type 5098-A. Courtesy DuMont.

Current Control" on the camera control unit in the control room. Grid No. 1 voltage is negative and is variable between —5 and —85 volts, depending upon the adjustment at the control unit. Pin 10 is Grid No. 2 and Dynode No. 1. Its potential is aproximately 300 volts positive. Pins 5, 9, 6, and 8 are dynode numbers 2, 3, 4, and 5 respectively. The dynodes operate at progressively higher potentials; for the 2P23 they run 600, 880, 1160, and 1450 volts. The resistance-capacitance networks serve to decouple the dynodes from the power supply. Pin 7 is the anode or signal plate which collects the multiplied electron stream constituting the video signal from the dynode No. 5. The corresponding video signal produces a voltage drop across R98-43, which is applied to the first stage of the video preamplifier. Pin 2 is the wall coating constituting Grid No. 4, which provides the most effective beam focusing for the target scan. Its potential is between plus 150 and 230 volts, determined by the amount of focus coil current. The remaining pin which is used is Pin 3, Grid No. 3 in the image orthicon. This grid is the first electrode in the electron lens system, next to the beam gun. Grid No. 3 may be varied between plus 150 and 300 volts by the potentiometer R98-28, located in the camera head. C98-8 serves to bypass spurious signals which otherwise might modulate the dynode electrons.

L98-5, the orthicon focus coil, is connected at one end to the plus 300 volt bus, and at the other end (terminal D) to the focus coil current regulator. The focus coil current is usually in the vicinity of 65 milliamperes. Current through the alignment coil (L98-6) is adjusted by R98-79, a potentiometer located in the camera head. In practice, this coil is both rotated about the axis, and its current varied, for maximum video signal obtainable with correct shading.

It is noted that the anode and dynodes obtain their potentials from a high-voltage (3.5 kilovolts) rectifier. This voltage is dropped across resistors R98-7 through R98-12, to the arm of switch

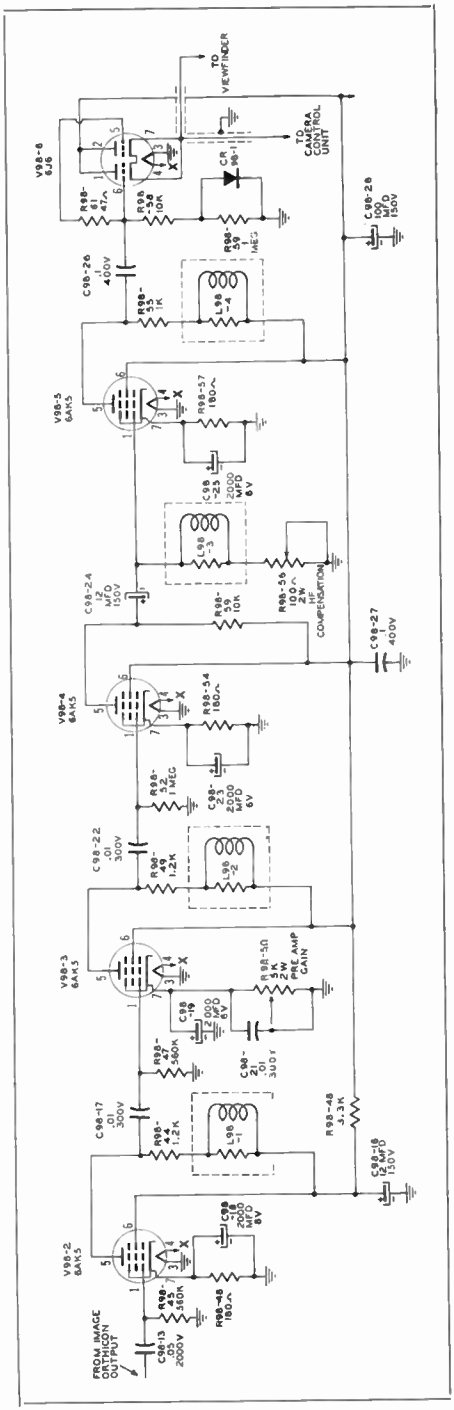

Figure 2.3C. Videa preamplifier as used in DuMant type 5098-A pickup head.

SW98-1, allowing voltage adjustment from 900 to 1500 volts. This adjustment prevents overloading of the last dynodes that might occur from the more sensitive image orthicon tubes. The switch and resistor network allows a voltage adjustment to be made without a change in bleeder current, which would otherwise vary the load on the horizontal sweep circuits. (The "flyback" circuit rectifies the horizontal sweep pulse rapid change through an inductance which provides the high voltage, hence any change in the load of this rectifier would affect the stability of the H sweep circuit). The flyback rectifier will be discussed presently in this section.

The signal voltage from the image orthicon tube is amplified by a video preamp located in the pickup head. Fig. 2.3C shows the schematic of the amplifier for the Du Mont camera under discussion. This allows sufficient amplication of the picture signal to adequately transmit the signal over a coaxial cable to the associated camera control unit in the control room, well above any random noise level. The preamp of Fig. 2.3C uses four 6AK5 voltage amplifiers, and a 6J6 cathode follower to feed the coaxial cable. The first stage (V98-2 in diagram) is shunt-peaked (described in section 2.4), and the plate and screen supply is decoupled from the supply used for the rest of the preamp by R98-48 and C98-16. The second stage V98-3 is also shunt-peaked and contains a gain control in the form of a potentiometer in the cathode circuit. This control is located in the pickup head and may be adjusted by the cameraman. The setting of this gain control is determined by a number of factors and must be adjusted in close cooperation with the camera control unit operator in the control room. The third stage, known as the "high-peaker," V98-4 works into L98-3 and R98-56 constituting the plate load of the tube. This is a high-frequency compensation network to boost the highs in direct relation to those lost by the shunt capacitances in the input circuit of the preamp. The control is made variable to allow for changes of tubes, aging of components, etc., which might affect the effective capacitances. The fourth stage V98-5 is a shunt-peaked voltage amplifier driving the 6J6 double triode cathode-follower output stage. Such stages are used in TV systems, since transformers are inadequate for extremely wide bands. The crystal diode CR-98-1, across the 1 meghom resistor R98-59 in the grid circuit of the 6J6 is used to prevent overloading of the stage by extreme white peaks. As the grid swings positive over a pre-determined value, the crystal will conduct to the ground thus avoiding an overload. One output of this stage feeds the camera control unit, the other is used to feed the electronic viewfinder of the head. Tubes connected as cathode-followers have no signal gain, but effectively match the circuit output impedance to the 75 ohm transmission line.

Fig. 2.3D illustrates the schematic of the remaining portion of the pickup head circuits. Horizontal *driving pulses* timed from the H sync pulses, are received from the sync generator through the camera control unit, on terminal No. 3 (lower right) of the diagram. These pulses trigger one-half of V-98-11, the 6J6 horizontal blocking oscillator, through the trigger winding on the transformer T98-2. Trace this out on the diagram of Fig. 2.3D, and follow the description. Remember it is the purpose in this part of the circuit to generate a sawtooth scanning wave triggered by the horizontal line frequency of 15,750 cps.

A blocking tube oscillator of the type described here is common in sawtooth wave form generation, when it is necessary to synchronize its action with a definite time-displacement of operation. Such a circuit forms the *trace* of the sawtooth waveform when the blocking tube *is not conducting*, and the *retrace* is formed when the blocking tube *is conducting*. Referring to Fig. 2.3D, the sequence of operation for the blocking oscillator V98-11 (upper right hand tube), is as follows:

When the grid, pin No. 5, swings positive, plate current *increases* and plate

voltage *decreases*. The increased voltage drop across the transformer primary (T-98-2) is coupled into the secondary winding with such polarity as to reinforce the positive swing of the grid. This is known as a feedback cycle which drives the grid positive to a point where no further increase is obtained in the plate current. At this time, transformer feedback ceases (no current *change* through the inductance), and grid voltage falls off rapidly. Therefore plate current rapidly decreases and plate voltage increases. The new change in plate current appears in voltage of opposite polarity across the primary, initiating a negative voltage upon the grid and therefore a new feedback cycle of opposite polarity. At this time the tube is biased well beyond cut-off, and is not conducting. The large negative charge on the grid capacitor C98-41 (due to the previous grid current flow) begins to flow through the grid resistor R98-78 while the tube remains non-conducting. When the capacitor discharges, the grid will again reach a potential allowing the tube to start conduction. The time allowed for the capacitive charge to leak off is determined by the time-constant of the RC combination, determining the frequency of the sawtooth.

The second section of this tube is the *discharge* section. The grids are tied together, therefore receiving the same charges simultaneously. When the oscillator section is conducting (grid positive), the discharge section also conducts since its grid is also positive. When the grids become negatively biased, the capacitor in the plate circuit of the discharge section slowly charges through resistors R98-76, R98-73 (adjustable), and R98-75. This generates the *trace* portion of the sawtooth waveform. When the tube is triggered by the driving pulse causing the tube to conduct, the capacitor rapidly discharges, generating the *retrace* portion of the waveform.

Due to the action of the blocking oscillator which is being triggered at the horizontal frequency, the second section

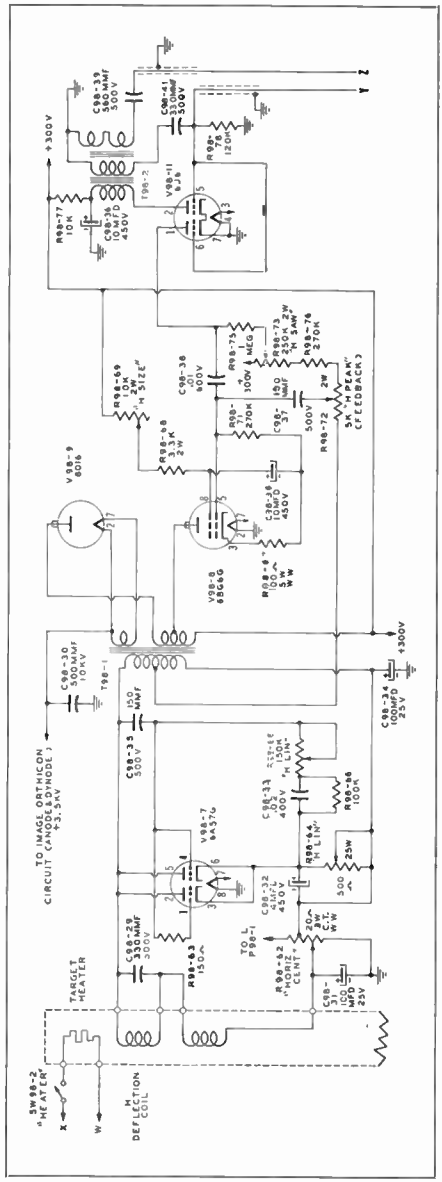

Figure 2.3D. Above and right. Courtesy DuMont.

of this tube (the discharge, section, or sawtooth generator) will have its plate driven almost to ground potential at the end of each sweep. During the sweep interval when the blocking oscillator is *not* triggered, plate voltage rises in sawtooth (linear) form. This sawtooth volt-

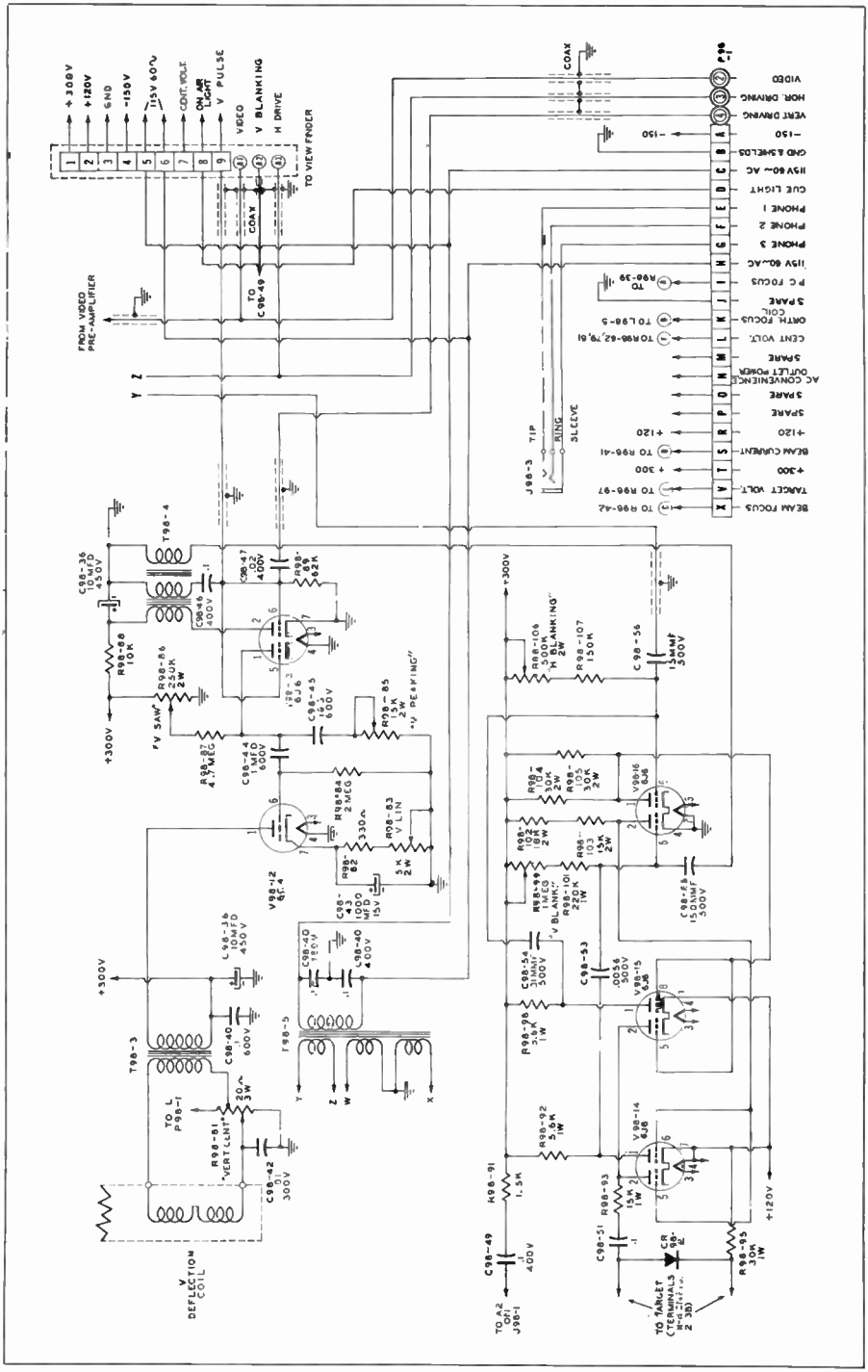

Figure 2.3D. Center and lower. Courtesy Du Mont.

tage is applied to the V98-8, a 6BG6-G *driver* tube. It may be seen from the diagram that the top of the deflection transformer T98-1 is connected to the top of the horizontal deflection coil (across the damper tube V98-7 to be described). When the driver tube is conducting, current in the H deflecting coil is increasing as shown in Fig. 2.3E. When the driver tube rapidly decreases conduction, the H coil current also rapidly decreases as shown in Fig. 2.3E. It is well known that a rapid change of current flowing through an inductance will create a voltage surge dependent upon the rate of change of the current and the self-inductance of the coil. This is the source of voltage for the high voltage ("flyback type") rectifier shown in the diagram as V98-9. This interval is the "flyback time." The yoke inductance and its distributed capacitance is said to "ring" in a damped oscillatory fashion for about a half cycle. The tube which now comes into operation is the stage V98-7, a 6AS7 *damper* tube. This tube now conducts and causes current to flow through the H coil in the direction shown by Fig. 2.3E. Thus it may be seen that the scanning (sawtooth) current through the H deflecting coil is supplied alternately by the *driver* and the *damper* tube. In practice, it will be found that the driver tube supplies sweep for the right side of the picture, and the damper tube supplies sweep for the left portion of the picture. This will be explained in detail later in this section.

Resistor R98-73 in the discharge tube circuit is a control located in the camera head (marked "H Saw" in diagram) provides a discharge time-constant for adjusting sweep linearity. It is found in practice that this control affects the size and linearity of the picture on the right-hand side of the raster. R98-69 marked "H Size" adjusts the screen voltage of the driver tube. It affects the size of the overall picture, since this affects the peak current drawn by the H deflection coil. Two linearity controls are shown in the damper tube circuit, one in the grid circuit, and one in the cathode circuit. These control the phase and extent of conduction of the damper tube, and affect the linearity of the left-hand side of the picture. The "horizontal centering control" R-98-62 adjusts the amount of an externally applied direct current through the H deflection coil, serving to center the sweep. Another control in the pickup head not yet discussed is R98-72 in the grid circuit of the driver tube, marked "H Peak." This is a feedback adjustment to prevent the driver tube from conducting at too early a time which would upset the proper transition of current from the damper tube to the driver stage.

The vertical deflection circuits are shown in the diagram at the center of the drawing. This circuit operates upon the same principle as described above, but is at much lower frequency (60 cps as compared to 15,750 cps) and therefore is somewhat different in circuitry. The coil of the vertical yoke is largely resistive at 60 cps, therefore no large surge of voltage occurs during retrace. Thus there is no "ring," or oscillation to be damped out, and no damper tube is employed. The vertical deflection circuits therefore consist of the blocking oscillator-discharge tube V98-13, the driver tube V98-12, and the deflection transformer and yoke combination. There are four controls located in the pickup head for the vertical sweep circuits. The control marked "V Saw" in the diagram, R98-86, adjusts the time constant of the sawtooth generation, and affects the vertical size of the picture. This is in the plate circuit of the vertical

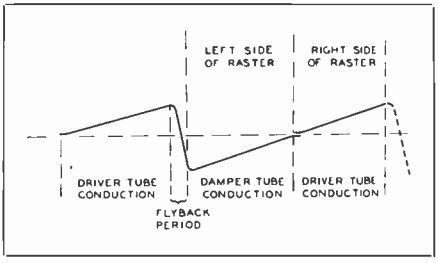

Figure 2.3E.

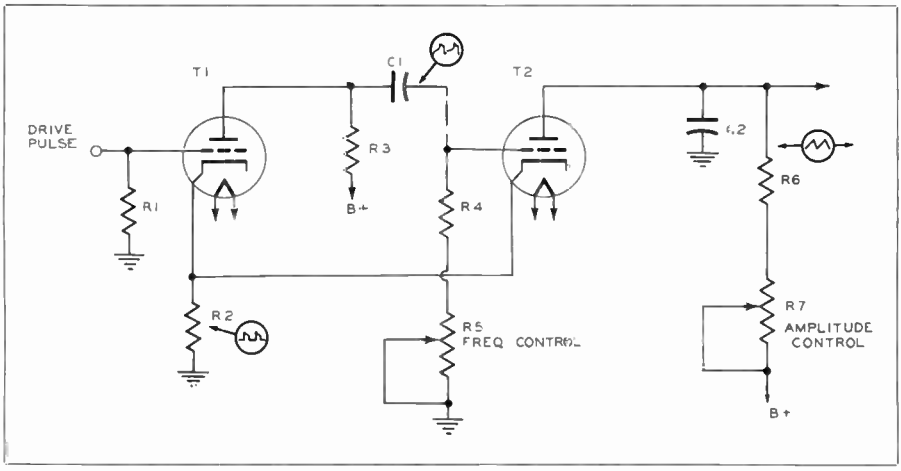

Figure 2.3F. Basic multivibratar circuit.

discharge tube. The control marked "V Peaking," also in the plate circuit of this type, supplies a trapezoidal component of voltage which assists the start of the sweep conduction. The vertical linearity is controlled by R98-83 in the cathode of the driver tube (marked "V Lin" in diagram). Centering of the vertical sweep is affected by passing direct current through the yoke, and controlling the direction of flow by means of the center-tapped potentiometer R98-81, marked "Vert Cent."

It should be recalled that the sweep must be blanked at the target at the time of the retrace, to prevent the retrace lines from being visible, and the generation of spurious signals caused by retrace action on the target charge. Blanking circuits which accomplish this function are shown at the bottom of the diagram, Fig. 2.3D. The same horizontal and vertical driving pulses used to trigger the sawtooth H and V scanning generators, are used to trigger the H and V blanking generators. The circuits in this diagram are *multivibrators*, and the basic principles of such a circuit will be presented at this time before an analysis of the diagram.

Fig. 2.3F illustrates a basic multivibrator circuit. Essentially, such a circuit provides feedback action between two tubes (usually a single duo-triode type) so that one tube conducts while the other is non-conducting, then *vice-versa* on the succeeding alternation. The similarity of circuit action to the blocking tube oscillator described above will become obvious in the following discussion.

Assume for the moment that the grid of T2 is swinging in the positive direction. Plate current of T2 will increase, and since this current is flowing through the common cathode resistor R2, T1 receives a negative bias. (Grid more negative with respect to cathode due to increased voltage drop across R2). Thus the plate current of T1 decreases, and its plate voltage increases. As T1 plate voltage increases, the grid of T2 increases still further in the positive direction, thus reinforcing the initial increase in T2 grid voltage in the positive direction. Here it may be seen that tube T1 is serving as the feedback tube, similar to the transformer action in the blocking tube type of oscillator described above. The grid of T2 increases in the positive direction until no further increase of T2 plate current is able to take place. At this time, since no further change of plate current occurs, feedback ceases and T2 grid voltage begins to decrease, and the feedback cycle is reversed. Since

the bias is now decreased on T1, its plate current increases (tube starts conducting), and the resulting reduced plate voltage on T1 drives the grid of T2 into the region of bias below cut-off. T2 then remains non-conducting until the capacitor C1 discharges through R4 and R5 to the point where T2 may again conduct. During this interval, capacitor C2 is charging through resistors R6 and R7, and the sweep of the sawtooth is formed as shown in the diagram. When T2 starts conducting, capacitor C2 rapidly discharges through the tube, and the sawtooth waveform returns rapidly to zero as shown. Since R5 is a variable resistance in the grid circuit of T2, it provides a means of determining the rate of discharge of C1, hence the frequency of the sawtooth wave. R7 in the plate circuit of T2, determines the amplitude of charge placed upon C2 while the tube is not conducting, hence provides a means of adjusting the amplitude of the sawtooth waveform.

Returning to Fig. 2.3D, horizontal pulses from the grid of V98-11 are also applied to the grid of one section of V98-16. The second tube of this horizontal blanking multivibrator circuit is one-half of V98-15, which is direct-coupled to V98-16. A blanking pulse must be essentially rectangular in shape rather than a sawtooth form, and since this type of waveform requires excellent low frequency response, direct-coupling is usually used in such circuits. R98-106 in the grid circuit of V98-16, since it provides control of the time constant, adjusts the width of the blanking pulse. This control is marked "H Blanking" in the diagram, and is located in the pickup head. The output of this horizontal multivibrator circuit is direct-coupled to the mixer section of V98-15.

The other section of V98-16 receives the vertical driving pulse from winding on the B.T.O. transformer (T98-4) through the capacitor C98-55. This is the "on-tube" of the vertical multibrator, and is direct coupled to the second or "off-tube" V98-14. R98-99 in the grid of this section of V98-16, since it sets the time-constant of operation, is the Vertical Blanking Width control.

Since the plates of V-98-15 and V-98-14 are connected together, the H and V blanking waveforms are mixed together. These waveforms are triggered at the proper times since they are started by the driving pulses which, in turn, are generated in the main sync generator.

This mixed blanking signal is fed to the target of the image orthicon through the capacitor C98-51. The target voltage is set by the "Target Voltage" control on the Camera Control Unit in the control room. A *negative* voltage is applied across R98-97 (Fig. 2.3B) to balance the positive voltage across R98-95 in the cathode of V98-14 in Fig. 2.3D. This allows the necessary 3 to 5 volts variation in DC level of the target voltage with respect to ground.

Since it is necessary to use the coupling capacitor C-98-51, the DC components of the blanking signals are lost. Therefore a 1N34 crystal, CR 98-2, is used to maintain the DC component.

The jack J98-3 in Fig. 2.3D provides for insertion of headphones for the camera operator, which is part of the very necessary intercom system, enabling the technical director and producer in the control room to instruct the operator in camera movements and operation.

Although the above analysis has concerned a specific model of TV pickup head, the general characteristics will be found common in all cameras. It will now be possible to study the refinements in electrical operating characteristics for various pickup-head circuits, that are applicable to every make of television camera.

The first subject to be considered is the detailed action of the various magnetic coils positioned around the image orthicon tube. These coils are the focusing coil, the alignment coil, the horizontal deflection coils and the vertical deflection coils.

The focusing coil encircles the tube from the emitting end of the electron gun to the face. Its purpose is to concentrate the electron stream into the nar-

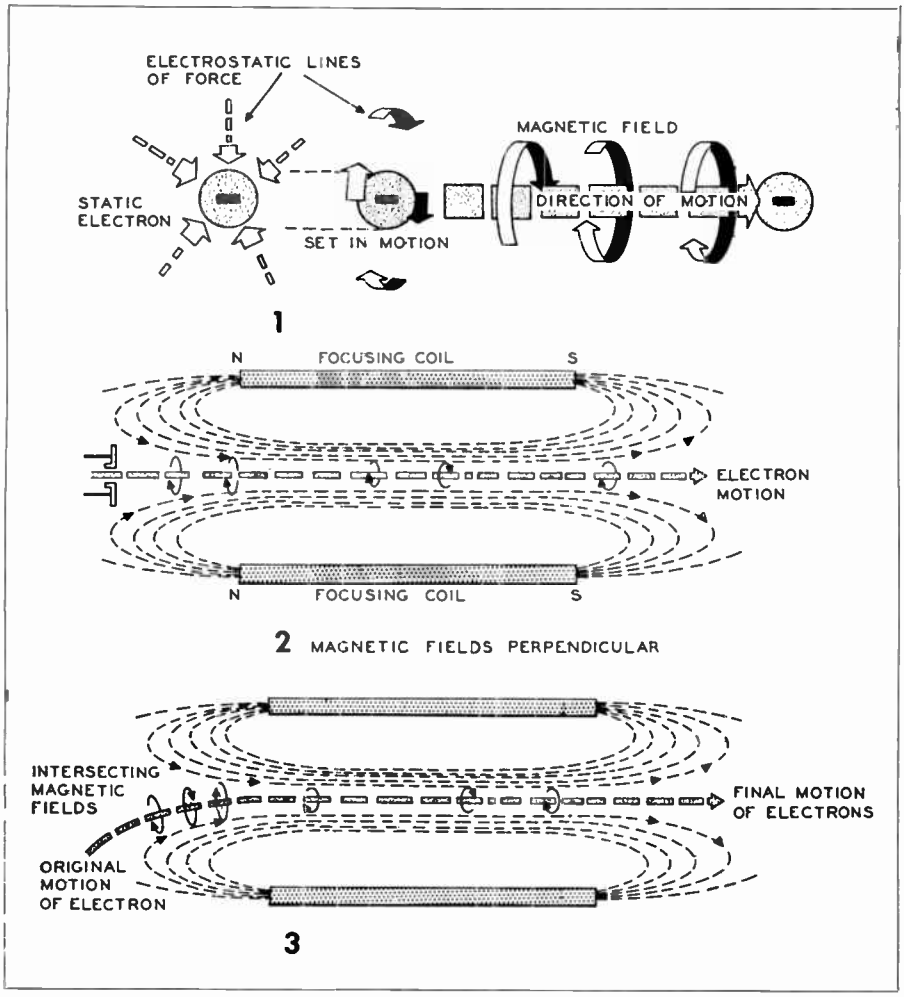

Figure 2.3G.

rowest diameter possible for good resolution of picture content. It must obviously be small enough not to overlap the line structure. The action of the focusing coil is commonly termed a magnetic lens, and may better be visualized by reference to Fig. 2.3G. In drawing (1), it is recalled from basic theory that an electron has an electrostatic field of force about it, converging upon the charge. When set in motion, the electrostatic field is distorted, creating an electromagnetic field at right angles to the electrostatic field. In (2) the magnetic field of the focusing coil is shown. If the electron enters the field so that its magnetic lines of force are perpendicular to the focus field (that is, in a straight line between the coil), no interaction occurs except that required to keep the electron in a straight path. In (3), the initial direction of the electron is such that its magnetic field is not in accord with the focus field, and interaction occurs to "line up" the direction of travel. There is no interaction between perpendicular

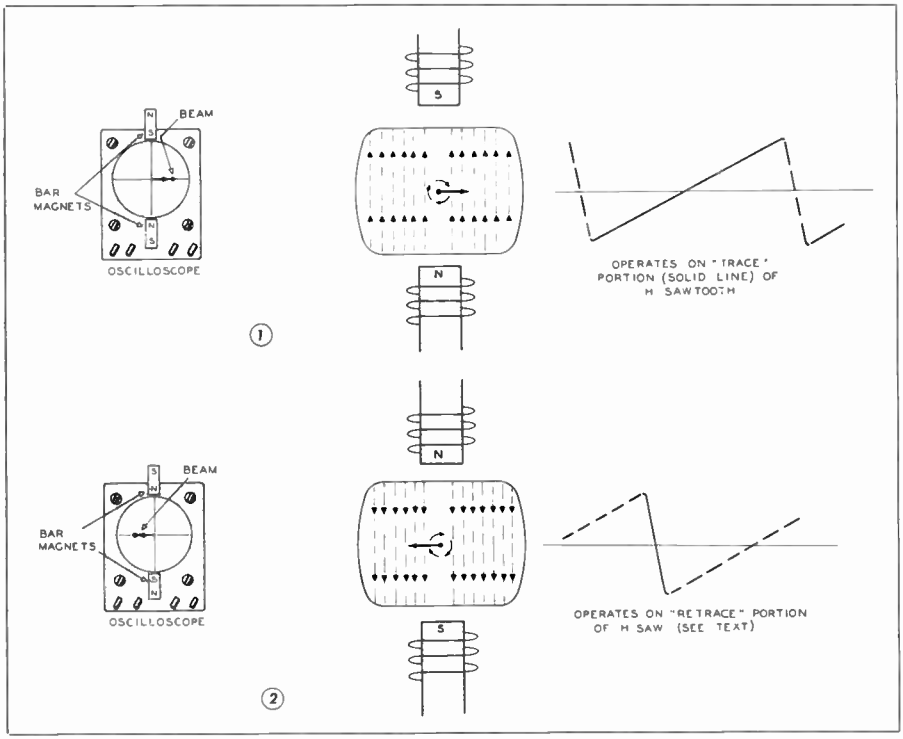

Figure 2.3H. Looking from target toward electron gun, with sawtooth in "H" coil creating a North Pole on bottom, lines of force move "up" and beam is deflected to right.

magnetic fields, but when the angle shifts from 90°, interaction occurs. Thus the electrons are focused into a beam.

It is now possible to more clearly examine the mechanics of the scanning function. If strong bar magnets are positioned at top and bottom of the tube in a cathode-ray oscilloscope as at the left in (1) of Fig. 2.3H, with N pole on bottom and S pole on top, the beam is deflected to the right. In the center drawing (1), the trace portion of the deflection sawtooth current is passing through the H coils in such a direction that the N pole is at bottom and lines of force are running upward. We are looking toward the electron gun from the target, and the beam is therefore traveling toward the observer. The left-hand rule should be used to find the direction of magnetic lines of force about the beam: grasping the beam of electrons by the left hand, and pointing the thumb in the direction of flow (toward the observer), the fingers indicate the direction of the magnetic field, in this case clockwise. Therefore, the lines of force to the left of the beam are additive, and those to the right of the beam (since they run in opposition) tend to cancel out. Thus it is seen that the force is exerted on the left side of the beam, deflecting it to the right. This constitutes the "scan" or "trace" of the electron beam across the target scanning area.

Figure 2.3H(2) illustrates the action when the sawtooth current through the H coils reverses in direction, therefore reversing the direction of the magnetic field. The lines of force on the left of the beam now cancel, while those to the right of the beam add together in strength. Force is now exerted on the right of the beam, deflecting it to the left. This is the

retrace function of the horizontal line scanning, returning the beam to the left side of the raster so that another line may start to be scanned.

Fig. 2.31 illustrates the interaction of the magnetic fields for vertical deflection of the scanning beam. Again looking from the target toward the electron gun, considering the electron beam coming toward the observer and the V current causing a magnetic field in the direction shown, the beam is moved downward. It is recalled that the lines scanned move slightly downward along each horizontal scan so that the return at the end of each line causes the beam to fall into the second line down for "interlacing" of the scan. This action illustrated in drawing 1 of Fig. 2.31 occurs on the long linear portion of the V trace, which last for 262.5 lines, or one field. Drawing 2 illustrates the occurrence of the vertical retrace period, where the sawtooth waveform current has reversed direction, causing the magnetic field to reverse. Thus the beam is returned to the top of the raster to start a new field.

It should now be possible to visualize the details of the entire scanning cycles. The scanning for a complete frame is started at the upper left of the target, and sweeps back and forth on alternate (odd) lines to the lower right corner of the area. At this time the *field retrace*, (vertical retrace) returns the beam to the upper center of the raster. The beam now sweeps the remaining alternate (even) lines until it hits the lower center of the target. The *frame retrace* (since this constitutes two fields) takes over, and returns the beam to the top left corner to start the same sequence over

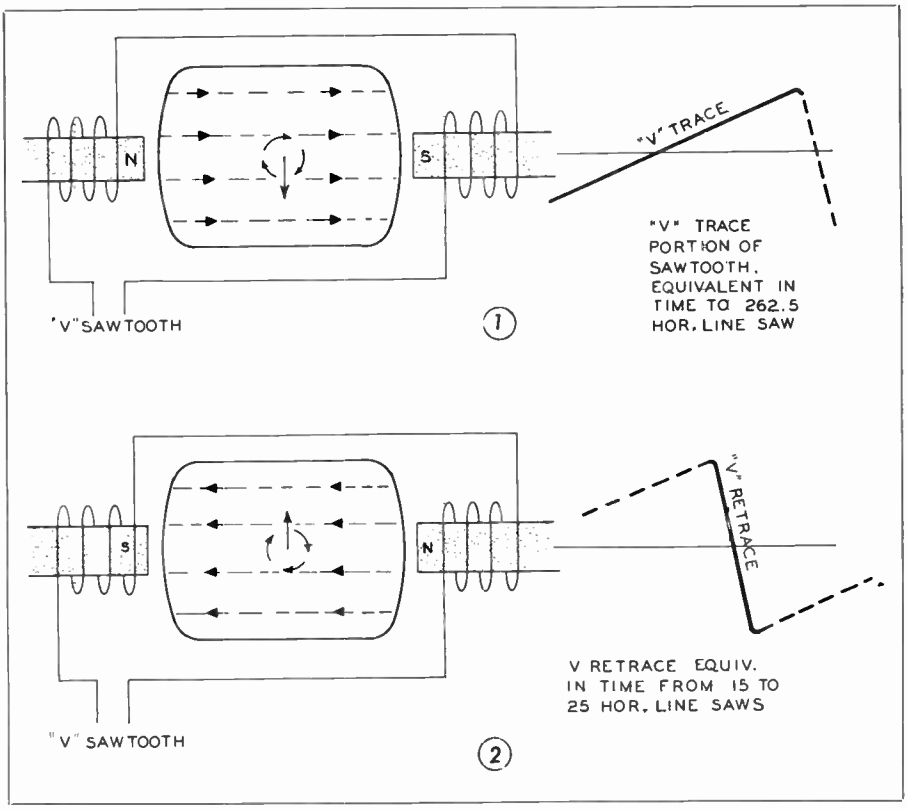

Figure 2.31.

again. *Field* retrace and *frame* retrace are produced from the same type of vertical waveform; the terms simply designating the position at which the retrace starts and ends.

This will be made clear by close study of Fig. 2.3J. Numbers on the scanning raster are correlated with those on the horizontal sawtooth waveform shown. Point 1 is the start of the last line of the first field of a complete frame. As pointed out previously in our discussion of the DuMont camera circuits, the *left* hand side of the raster (looking toward the electron gun) is scanned by current in the horizontal coils contributed from the *damper* tube. At the center of the picture (point 2), the sweep is affected by the current in the H coils contributed from the *driver* tube, and the *right* hand side of the target is canned. Point 3, therefore, represents the end of a full line of horizontal scan. In this example, it also indicates the end of the field, and the field retrace occurs. This means that point 3 has been reached on the V sawtooth, where the retrace begins. It should be observed that the beam does not return immediately to the top center, but sweeps back and forth a total of from 15 to 20 horizontal lines. This interval is blanked as discussed previously so that the beam does not actually cause any spurious charges on the target. At point 4, the second field is started. This is the *right* side of the target, and commences on the portion of the horizontal sawtooth contributed by the *driver* tube as shown. Point 5 is then the horizontal retrace to return the beam to the left hand side of the target, and the sequence is repeated. When the bottom line (half line) of the 2nd field is reached, the frame retrace occurs, and the beam is returned over an interval of another 15 to 20 horizontal lines, to the top left hand side to start another frame.

We have in this example and other places in the text, assumed the field retrace to start at lower right and frame retrace to start at lower center. It is, however, possible for just the opposite to be true; the field retrace could start at bottom center and frame retrace from

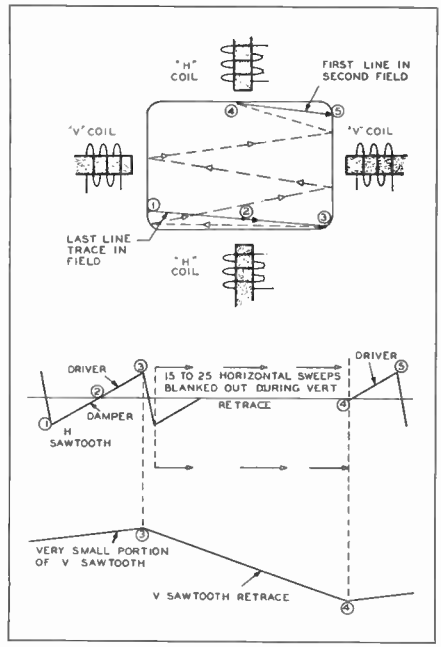

Figure 2.3J.

bottom right. Such sequence depends upon whether the vertical sweep oscillator happens to be triggered by an even number or odd number V sync pulse. Remember, however, that retrace between fields or frames is always one-half line apart, regardless of the position of the beam when retrace is fired. Retrace also may start anywhere along the bottom line.

The field rate occurs 60 times in one second, as compared to the line rate of 15,750 per second. Since a frame constitutes two fields, the frame rate is 30 per second. There are 262.5 horizontal lines in each field for a total of 525 lines in a complete frame. Since the vertical blanking period constitutes about 6% of the horizontal scan period, there are actually only about 493 *active lines* horizontally. In practice, this varies between 485 and 500 maximum horizontal lines which actually contain picture information, and are termed active lines. This varies because the vertical retrace time (according to present TV Standards) may lie anywhere from a minimum of

883.4 microseconds to a maximum of 1333.3 microseconds (Section 1.10, Chapter One).

Remember in this connection that the above timing rate applies to the vertical blanking or pedestal signal that is *transmitted* in the composite TV signal to blank the receiving kinescope during the vertical retrace period. The blanking pulse of the pickup head is *not* transmitted, is applied only to the camera sweep, and is shorter in duration than that transmitted. In this way the longer time interval of vertical blanking at the receiver allows a safety margin for good "trim" of picture edges. The receiver therefore has a vertical blanking interval equivalent to from 25 to 40 horizontal lines. The camera blanking at the studio must be slightly less than a 25 line interval, and usually lies in the vicinity of 15 horizontal lines. The exact shaping and timing of these various signals is fully analyzed in the next chapter covering sync generators.

It is now possible to see what actually constitutes the maximum possible *resolution* of the picture so far as the scanning process is concerned. If, for example, there are 490 active horizontal lines in a frame of the picture, there will be this number of line elements *vertically* in the image. Therefore if we consider a line as an element, the *vertical resolution* is set by the number of active lines, in this example, 490. This amount of vertical resolution is unusual in practice, because the scanning beam is not able to exactly reproduce a sudden change in illumination vertically. As an example, if the original scene being televised contains a thin black line next to a thin white line, the scanning beam is actually apt to be covering the point on the target directly in between, and reproduce a gray scale because it is really covering both lines. The relation between the actual picture information and the scanning aperture is termed the *Kell factor*, and limits the practical vertical resolution to *less* than the number of active horizontal lines. Vertical resolution usually lies between 350 and 400 lines at the receiver. Higher resolution may be obtained at the studio monitoring units.

Horizontal resolution depends upon the number of picture elements which the system is capable of reproducing along each horizontal line. In practice this is found to be between 400 and 600 elements per line. In our present example, if there were 500 elements in each line, the 490 lines would yield a total of 245,000 horizontal elements per frame. The number of elements along each line which the camera is able to actually reproduce is limited by the diameter of the scanning beam, as discussed below, and the frequency response of the video amplifiers. In practice, the horizontal resolution is also measured in lines by means of the test chart, as thoroughly outlined in Chapter 6. The RTMA (Radio-Television Manufacturers Association) Committee on TV Transmitters have proposed in their Standards Proposal No. 217, that the over-all resolving power of TV studio facilities be at least 350 lines vertically, and 400 lines horizontally. As equipment improves, this minimum standard undoubtedly will be raised.

The spot size, or aperture, places an immediate limit as to maximum resolution of detail that may be obtained from the pickup head.

Observe Fig. 2.3K in (1) is a "checkerboard" pattern consisting of alternate picture elements of black and white squares. In (2) is shown the "ideal" camera signal output for such a pattern. In (3) is an illustration of the aperture as it sweeps across a single square of the pattern, when the size of the spot is just equal to the sides of the square. In (4) it may be seen that the resultant waveform is "distorted" from the ideal, because of the finite size of the scanning aperture. In (5) the resultant waveform output of the camera is shown, which is seen to differ from the ideal camera signal for the checkerboard pattern. Such deviation of signal content is known as "aperture distortion," and occurs for elements in the image on the tube that approach the size of the spot diameter. In practice, a *picture element*

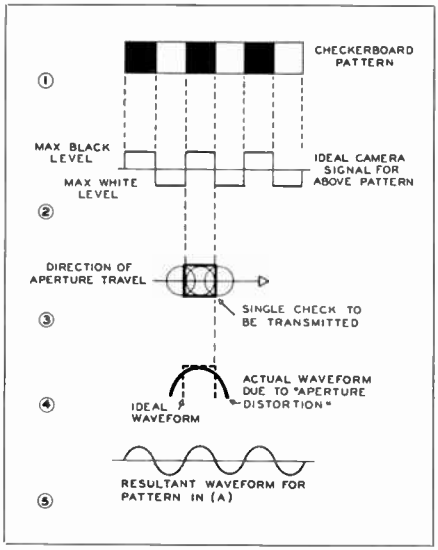

Figure 2.3K.

is defined as being the smallest area of a scene that may be *resolved* by the pickup tube. Thus such a picture element may be limited by the spot diameter.

The phenomena of aperture distortion should now be more apparent. In practice, such distortion is of minor consequence compared to other forms of resolution limiting factors, *if the beam current is exactly focused for minimum spot size.* When such is not the case, either from faulty adjustment or circuit troubles, the aperture distortion increases rapidly and should be understood by all TV operators.

For the convenience of the reader, the entire scan sequence is here reviewed. Due to the extreme importance of understanding this sequence, it is suggested that any step listed below which does not seem clear, should be reviewed in the previous text.

1. The 6.3 heater volts is applied to bring the electron gun to operating temperature, which boils electrons from the cathode surface.

2. The electrons are drawn toward strong positive charges on a path toward the target. They are limited by the potential of grid 1. The velocity with which they are fired is determined by the potential of grid 2. The exact alignment of their travel is influenced by current passing through the alignment coil at the very emitting end of the gun.

3. Current in the long focusing coil which surrounds the entire tube and yoke assembly concentrates the electrons into a thin beam for the purposes of scanning small areas of the target. The potentials of grids 4 and 5 assist in this formation of the beam. Grid 3 has negligible effect here.

4. At the start of a frame scan, currents (sawtooth) in the H & V deflection coils create a cross-magnetic field which positions the beam at the upper left-hand corner of the target. As this sawtooth current in the H coils increases in one direction from the damper and driver tubes of the H deflection generator, the scanning beam moves to the right across the target. Under the influence of the changing current in the V deflection coils, the spot is given a slight downward trace.

5. As the aperture thus traverses the line, positive charges on the target at points corresponding to varying degrees of light in the televised scene extract a certain number of electrons from the beam. The number extracted will depend upon the amount needed to neutralize the charge, in other words upon the degree of brightness at that point. As the beam which is deflected back toward the electron multiplier (return beam) thus varies in strength, it is said to be amplitude modulated by the amount of charge at scenic points along the image on the target.

6. The beam continues along the line until it reaches the right-hand edge. At this time, the saw current in the H coils rapidly reverses direction, changing the direction of the magnetic field and therefore deflecting the beam back to the left-hand side of the target. Due to the slightly downward trace of the scanned line, the beam returns to the alternate line below (interlaced scanning). At the instant this retrace deflection starts, a blanking pulse triggered from the blanking generator is received on the target

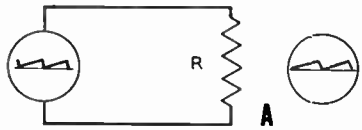

Sawtooth applied to a pure resistance will produce a sawtooth current thru the resistance.

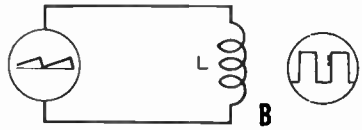

Sawtooth applied to a pure inductance will produce a squared or rectangular current thru the inductor.

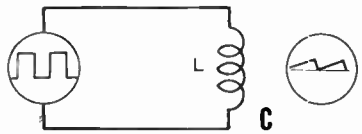

A rectangular wave applied to a pure inductance will produce a sawtooth current thru the inductor.

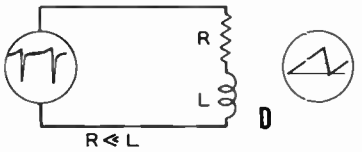

Type of modified waveform typical of application to "H" deflection coils since inductance is large compared to resistance.

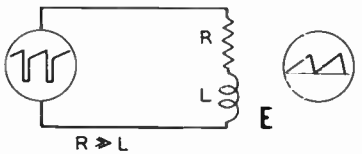

Type of modified waveform typical of application to "V" deflection coils since load is largely resistive.

Figure 2.3L.

screen. This pulse drives the target far enough negative that the entire forward beam is repelled, corresponding to maximum black level of the signal. Thus the retrace beam never actually reaches the target, and the retrace is not visible.

7. The above sequence is repeated throughout the field line scan to the bottom of the target scan area. At this time, the sawtooth current in the V deflection coils reverses direction, changing the direction of the V magnetic field. The beam is thus deflected to the top center of the target over a time duration equivalent to 13 to 21 H lines. During this time, the target is blanked by the longer vertical blanking pulse, keeping the return (signal) beam at black level.

8. The second field scan now starts, and the beam falls into the remaining alternate lines to complete the frame constituting a whole picture.

It is obvious from the study thus far that the shape of the sawtooth current in the deflection coils is highly important. The current should rise linearly at a definite time rate for absolutely linear deflection. Since both resistance and reactance is present in deflection coils, modified waveforms must be applied to them to achieve a real sawtooth form of current flow. Fig. 2.3L illustrates the principle under discussion. A sawtooth wave applied to a pure resistance (A) will cause a sawtooth current to flow therein, since no reaction is present. If, however, a sawtooth waveform is applied to a pure inductance (B) the self-inductive properties create a back emf on the first current flow which impedes the start of the current flow, then upon a collapsing field tends to maintain the current flow, distorting the applied sawtooth into a rectangular wave as shown. Conversely, a rectangular waveform applied to a pure inductance (C) will become close to sawtooth in form from the same action.

In the H deflection coils, the inductance is large in comparison to the resistive component, but the R cannot be discounted in considering the shape of the necessary applied waveform. Drawing D (Fig. 2.3L) shows a typical wave-

form applied to H deflection coils. Such a waveform has a rectangular formation along with a sawtooth component, in the proper ratio to compensate the R & L effects to produce a pure sawtooth. Drawing E shows a typical waveform as applied to the V coils, since at 60 cps the yoke may be made largely resistive. In this case a sawtooth is used along with a small rectangular characteristic.

For this reason, all H and V deflection amplifiers have some means of "shaping" the deflection waveform. Such controls in the pickup head are usually marked H or V "Saw" or "Linearity," and are used to vary the shape of the applied sawtooth over narrow limits. The main shape forming is done by the design of the circuit themselves.

A most important point to remember in control of sweep linearity is that the damper tube circuit in the horizontal sweep amplifier contributes to the left-hand side of the picture, and the driver (sometimes called the "output" stage), contributes to the right-hand side. This is common in all magnetic sweep systems at the studio or in the receiver.

Further camera circuit refinements and troubles in waveforms are elaborated under Maintenance and Servicing in Chapter 8.

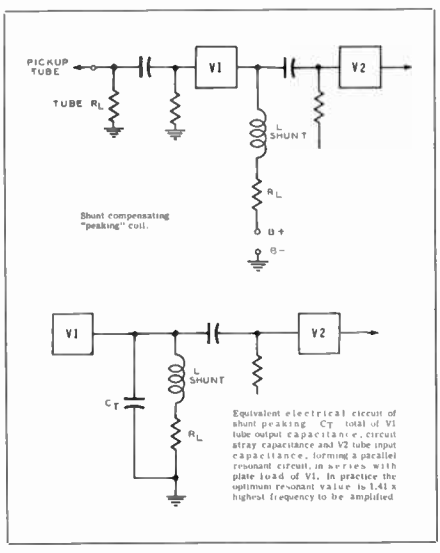

Figure 2.4A.

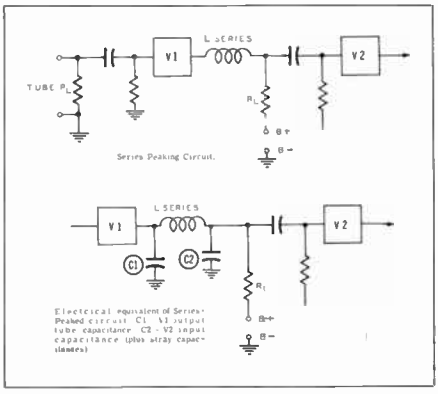

Figure 2.4B.

Series, or shunt "peaking" have been mentioned several times. The operator, especially the maintenance engineer, should be familiar with such circuits used to extend the bandwidth of amplification.

2.4 *Video Amplifier Peaking Circuits*

Fig. 2.4A illustrates the shunt peaking method for compensating usual high frequency losses. Electrically, the circuit amounts to a parallel resonant circuit, designed so that the resonant frequency is approximately 1.41 times the highest frequency to be amplified. Thus a boosting of the "high pass" frequencies* is affected, with no effect upon the lower pass frequencies.

In practice, peaking coils vary in value between one and several hundred microhenries. Ten to fifty microhenries is the average range found in commercial equipment for shunt peaking.

Fig. 2.4B illustrates the series type peaking circuit. The series coil, in combination with the effective circuit capacitance, forms a low-pass filter network. At first thought it might appear that such a circuit defeats the purpose intended; that is, to increase the efficiency of amplification at higher frequencies, referred to as the high pass frequencies. A basic analysis is therefore necessary.

*See Glossary in Appendix: "passband."

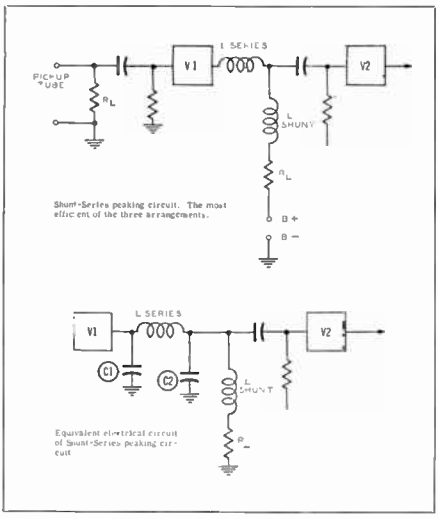

Figure 2.4C.

It is necessary to make C_1 twice the capacity of C_2. The load resistor R_L is always connected to the low capacitance side of the circuit. In practice, therefore, a small physical capacitor may be found in the circuit where the effective capacity C_1 would appear, therefore considered to be in parallel with C_1, effecting a 2:1 ratio in effective capacities.

The inductor L and capacitance C_1 forms a series resonant circuit with an effective resonant increase in current as the frequency increases. C_2 is separated from C_1 by the inductance L with resultant reduction in shunting effect across L at high frequencies in the pass band. Therefore, since the voltage drop in the series resonant circuit increases with increase in frequency, and is applied across the load resistor R_L shunted by C_2, the voltage developed in the load will likewise increase for frequencies in the high passband. This video voltage is then coupled to V_2 in the orthodox manner. The increase of higher frequency voltages resulting from the resonant effect of L and C_1, more than offsets the decrease in reactance of C_2 with increasing frequencies.

Fig. 2.4C illustrates the most efficient design used in video amplifiers to increase the high pass range. This is the shunt-series peaking circuit, and is seen to be a combination of the two methods just discussed. The increased voltage gain from such a circuit is aided materially by the fact that a load resistor of around 80 per cent greater value may be used than is possible with a simple shunt-peaked circuit. Since the gain of a stage is equal to the trans-conductance of the tube times the value of R_L, it is seen that the gain is appreciably increased by this factor alone. It should be remembered that the value of plate load resistance is limited in ordinary amplifiers by the bandpass required; too great a value of load resistance reducing the bandpass capabilities of the stage.

The relative gains of video amplifier circuits may be tabulated as follows:

1. Uncompensated 0.707
2. Shunt Peaked 1.0
3. Series Peaked 1.5
4. Shunt-Series Peaked . 1.8

Low-pass frequencies are of just as much importance in the video amplifier as the high-pass frequencies. It is recalled that a signal of 60 cps is used, which must also be transmitted with effective gain.

Fig. 2.4D illustrates an orthodox circuit with the addition of the low frequency filter circuit R and C. At the lower frequencies, the voltage across the

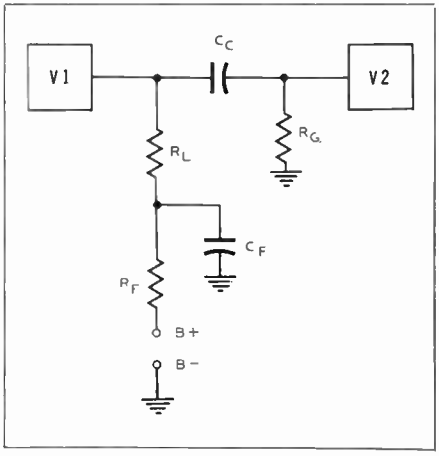

Figure 2.4D. Low frequency compensation network for video amplifiers.

grid resistor of V_2 decreases due to the increased reactance of the coupling capacitor C_c. However, the reactance of C_f also increases at the lower frequencies, and the shunt impedance of R_f C_f is added to the load resistor R_L. Thus it is observed, that as the lower frequencies become somewhat attenuated by the limited value of coupling capacitance, the total plate load impedance becomes greater and the resulting low passband boosting effect occurs to maintain constant gain across the entire passband.

2.5 *The Electronic Viewfinder*

The viewfinder is a separate unit which usually is removable from the camera head, ordinarily mounted atop the actual camera. Fig. 2.5A illustrates the Du Mont pickup head with viewfinder mounted, and all doors opened to expose the circuitry. The purpose of the unit is to allow the operator to see the scene being reproduced by his camera, and to make the necessary adjustment in the pickup head.

A block diagram and associated waveforms is shown by Fig. 2.5B. Such a viewfinder contains a video amplifier to drive the picture tube, with the necessary H and V deflection and blanking amplifiers usually of the same type as in the camera circuit itself. The video amplifier input is bridged across the output of the camera video preamp, thus receiving the same signal as is being trans-

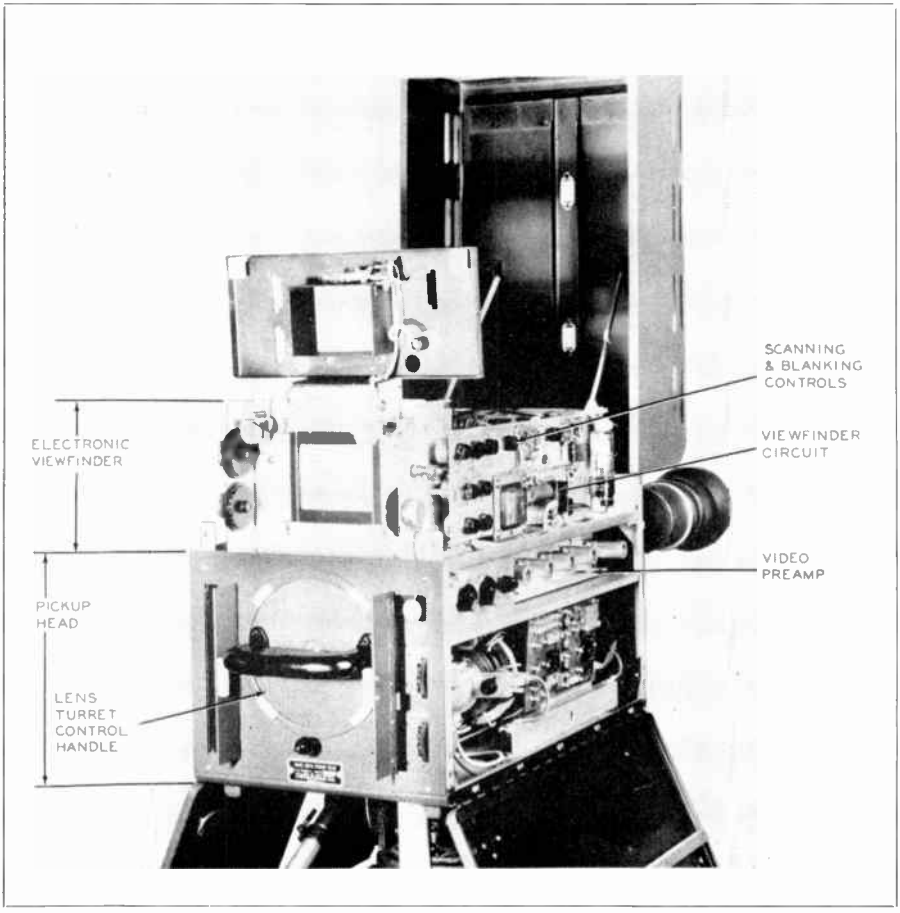

Figure 2.5A. DuMont image orthicon camera. Courtesy DuMont.

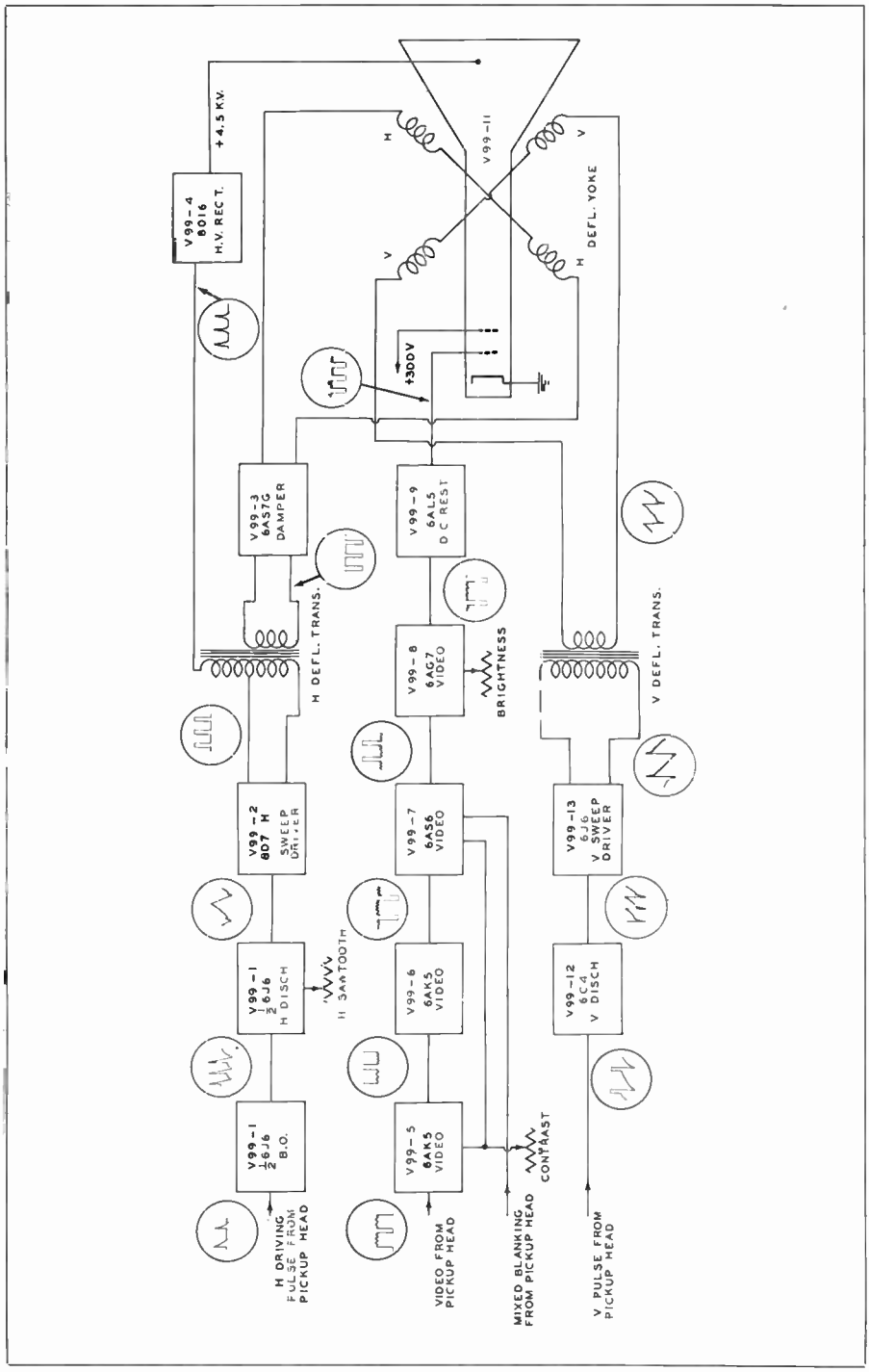

Figure 2.5B. Block diagram and waveforms, DuMont electronic viewfinder. Courtesy DuMont.

ferred to the control room via coaxial cable. The viewfinder H and V sweep circuits are "triggered" from the same signals that are used in the pickup head.

Following the block diagram waveforms (Fig. 2.5B), the video signal is applied to the first stage of the video amplifier, a 6AK5 tube. The remaining stages amplify the signal sufficiently to drive the control grid of the picture tube. DC restoration is made by the 6AL5 stage. It should be noted that the waveforms are inverted from each preceding stage, showing the normal 180 degree phase shift. Any deviation from this is known as non-linear phase distortion, and must be kept to an absolute minimum in TV amplifiers.

The video amplifier used here utilizes inverse feedback stages to obtain wide-frequency response, rather than peaking circuits. The "contrast" control shown is actually in the cathode circuit of the first 6AK5. It is a video gain control varying the effective mutual conductance of the tubes, since this is the accepted method of gain control with this type of feedback amplifier. The greater the gain, the more the picture contrast. The less the gain, the less picture contrast. Thus actually, it is noted that the "brightness" of the picture is affected by the contrast control, as well as the "brightness" adjustment shown at the DC restorer stage. The action of this stage is such that the video waveform is always positive with respect to an operating point determined by the voltage on the arm of the "brightness" potentiometer. This sets the operating bias for the grid of the picture tube, hence is the actual "brightness" control.

The electrical functioning at this point should be well understood by the reader since "DC restoration" is an important part of TV transmission. Fig. 2.5C is the schematic of this section of the Du Mont viewfinder, and will be analyzed here.

Remember that it is the function of the video signal from the 6AG7 tube to drive the control grid of the viewfinder tube brighter or darker (less negative

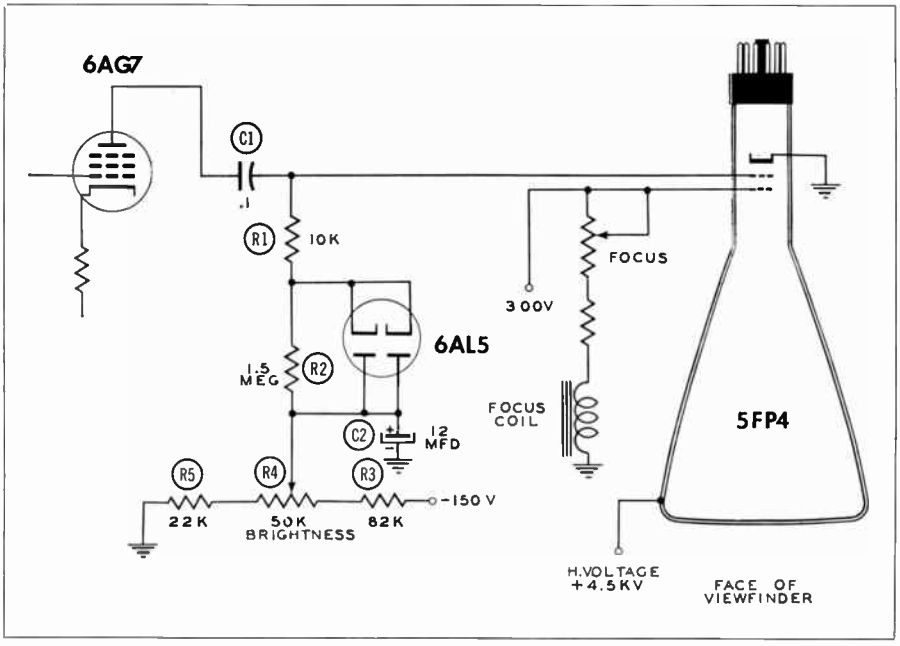

Figure 2.5C. DC restorer, DuMont viewfinder.

or more negative) corresponding to the brightness or darkness of the televised scene. At a very dark line of video content, the grid is very near cutoff; at a very bright line, the bias is reduced allowing a greater intensity of beam to reach the screen of the cathode ray tube face. The cathode ray tube is so biased that the grid exercises proper control over this relative brightness, and is driven into the cutoff region when the blanking signals arrive. This prevents the retrace lines from being visible on the viewfinder screen. Thus when no video signal is being received, the cathode ray tube is biased just to the cutoff point by means of "Brightness" control shown, which is R4 in the diagram.

Before proceeding further, it is well to examine what actually happens when circuits are capacitively coupled. Fig. 2.5D illustrates the point in question. In drawing 1 to the left is an illustration of what occurs at the image orthicon target. A line of high average brightness has a relatively low value of current output as covered in the interval "A" of the drawing. A line of low average brightness has a relatively high current as in interval "B." In either case, the blanking level is the same. Since this blanking level contains a large DC component (as shown in Chapter One), a capacitively coupled stage will not transfer it in the same amplitude relationship to the next stage. This is shown to the right of drawing 1. What has actually occurred is that the blanking amplitude has become changed, whereas the brightness level containing the video information has become relatively constant. The effect of this at the receiving cathode ray tube as used in monitors or home receivers is shown in drawing 2. The average brightness is at one point of the beam current characteristic curve, and will obviously not reproduce the varying brightness levels to make up a picture. The blanking levels are so altered that some of them (those occurring with low average brightness) will not drive the beam current to cutoff. It is therefore the function of the "DC restorer" to return the blanking levels to a constant value corresponding to beam cutoff, and allow the brightness levels to vary over their required range. This is illustrated in drawing 3 as it applies to the beam current — characteristic curve.

We may now proceed with the discussion of Fig. 2.5C keeping in mind that the *blanking pedestal* is small for a relatively dark line of video information, and large for a relatively bright line. These blanking pulses arrive at the grid of the cathode ray tube as negative pulses so that they may correspond to the cutoff point of beam current. When a large blanking signal arrives (corresponding to a bright line of video information) since the pulse is a large negative excursion, the 6AL5 diode will conduct, rapidly discharging capacitor C1 through it. At the end of the blanking interval, this capacitor will charge again through resistors R1 and R2, developing a positive voltage on the upper end of resistor R1 which is at the viewing tube control grid. This prevents the diode from further conduction, and reduces the large negative bias of the control grid by the amount of the positive voltage developed. Since this positive voltage depends upon the amplitude of the blanking pulse, the larger the blanking pulse, the greater the positive voltage developed and the less the bias on the cathode ray beam current. Thus the brighter the video line (the larger the amplitude of the blanking pulse) the less the beam current bias and the brighter the line at the cathode ray tube face. A small amplitude of blanking pulse, corresponding to a dark line of picture information also causes the diode to conduct, since as mentioned previously, the initial bias is adjusted for cutoff with no video signal. The magnitude of the positive voltage developed at the top of R1, is now small, however, since the pulse producing it was low in amplitude. Thus the fixed negative voltage originally established by the brightness control is reduced slightly, transferring the video signal to the cathode ray tube grid at a point close to beam current cutoff. This illustrates the point mentioned previously; that the DC restorer functions so that

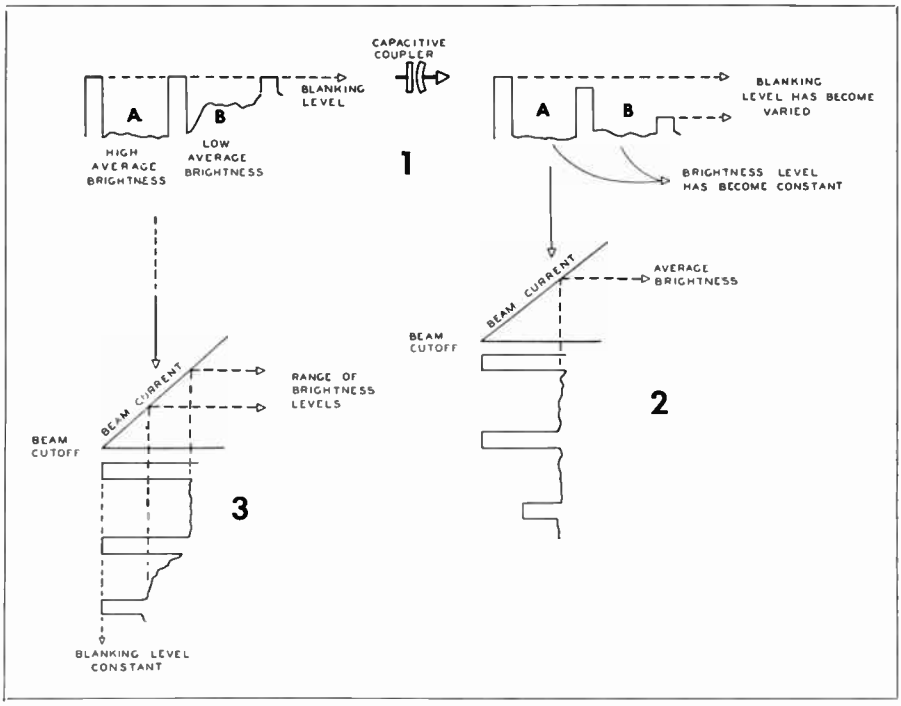

Figure 2.5D.

the video waveform is always positive with respect to an operating point determined by the voltage on the arm of the "brightness" potentiometer R4.

The modifications in sweep waveforms as discussed in a preceding section may be noted in the block diagram of Fig. 2.5B. The "H" coil is essentially inductive with little resistance, hence the rectangular waveform shown across the "H" deflection transformer. The "V" yoke is essentially resistive to the 60 cps vertical sweep, hence the sawtooth wave shown with small rectangular component to compensate for the slight inductive reactance.

All different makes of electronic viewfinders are designed around the principles discussed in this specific case. The video signal output of the camera is amplified through suitable amplifiers and controls, and applied to the control grid of the picture tube so that the electron beam is accordingly varied in strength corresponding to shades of black-through-gray-to-white. The beam is scanned in synchronism to the camera scan, and blanked at the synchronized time to achieve correct reproduction.

2.6 *The Iconoscope Pickup Tube*

The iconoscope type of pickup tube is illustrated and basically described in Chapter 1. It now remains to examine in greater detail the electrical functioning and response characteristics of this tube. It is used primarily for the telecasting of films and slides, and most engineers claim better resolution is obtained than using an image orthicon for this purpose.

A drawing of the essential parts, and bottom view of the socket connections for the iconoscope are shown in Fig. 2.6A. The heater and cathode assembly form the conventional electron gun as the source of scanning electrons. It should be observed that the scanning beam strikes the signal mosaic at an angle, which has effects described later

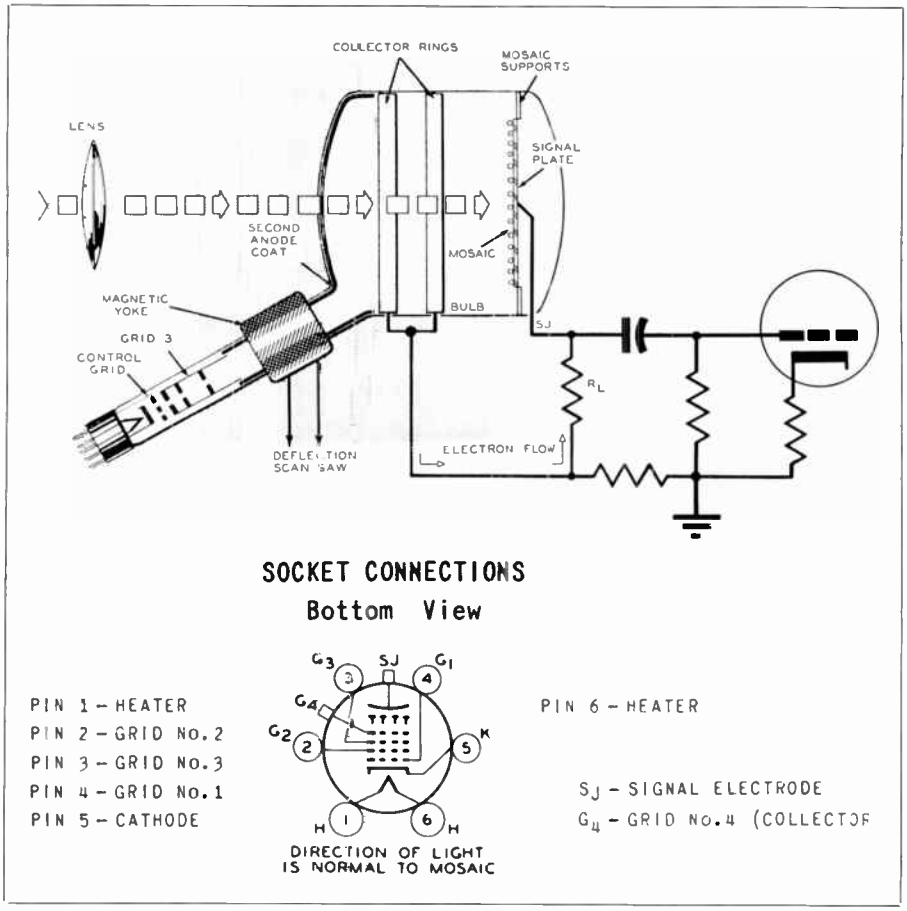

Figure 2.6A.

in this section. The tube is shown in the mounted position, with the mosaic on a vertical axis behind the lens system. Light reflected from the scene being televised (usually in this case film or slides) is focused upon the mosaic by the lens system through the face of the iconoscope. It is recalled that the mosaic is actually tiny silver globules deposited upon a thin mica sheet. Each globule is something less than 0.001 inch in diameter, but are insulated from each other as well as the signal plate. These globules comprise a photosensitive property which emits electrons by an amount dependent upon the light intensity striking their surface. The back side of the mica strip is coated with collodial graphite and forms the *signal plate*. Such an arrangement results in each silver globule forming a tiny capacitor with the mica as the dialectric and the signal plate being a continuous plate forming the other side of the capacitance. This should be visualized as a photosensitive surface (silver globules) being capacitively coupled to the output circuit, or signal plate.

Note at this time the Typical Operating Characteristics for the type 1850-A iconoscope given in Table 2.6B. Grid No. 4 is the *collector* shown in Fig. 2.6A, and operates in the vicinity of 1000 volts. Grid No. 3 voltage is 24 to 36% of this

Typical Operating Characteristics Type 1850-A

Signal Electrode Voltage	1000 volts
Grid No. 4 Voltage	1000 volts
Grid No. 3 Voltage (Beam Focus) 24% to 36% of Grid No. 4 Voltage	240 to 360 volts
Grid No. 2 Voltage	1000 Volts
Maximum Grid No. 1 Voltage for Pattern Cutoff 7% of Grid No. 4 Voltage	–70 volts
Grid No. 4 Current (with no mosaic illumination)	0.1 to 0.2 micro-amperes
External Load Resistance	100,000 ohms
Illumination on Mosaic:	
Steady Highlight Value for slides	4 to 6 ft-c
Average Pulsed Highlight for Motion Picture Film	10 to 20 ft-c
Ratio of Peak-to-Peak Highlight Video Signal Current to RMS Noise Current (approx.)	100
Minimum Peak-to-Peak Blanking Voltage	20 volts

Table 2.6B.

voltage, or around 240 to 360 volts. Here is the first major difference to be noted between this tube and the image orthicon described above. The iconoscope is *electrostatically* focused rather than using magnetic focusing. It should be observed, however, that the *scanning deflection* is accomplished by magnetic coils as in the image orthicon. Grid No. 3 is the beam focus grid and controls the spot diameter of the electron gun beam. It should be noted that the signal plate and the collector ring operate at the same potential.

The deflection coils shown are composed of a pair of H coils and a pair of V coils. This magnetic yoke sets up a field from the sawtooth scanning currents which serve to sweep the beam back and forth across the mosaic much as that described for the image orthicon. The yoke is rotated about the neck of the tube until the picture or test pattern is properly positioned as indicated by the picture monitor.

Consider first what happens when the lens is "capped," or no light is allowed to enter the optical window at the front of the tube. The scanning beam is caused to sweep the mosaic in accordance with the standard interlaced pattern of the TV system. In the iconoscope, this electron beam does not form a part of the signal as was the case with the image orthicon tube, and does *not* function as a modulated return for the picture signal. Its sole function here is to scan the mosaic. The beam is usually no smaller than about 0.006 inches in diameter, and since the individual globules are smaller than 0.001 inch, the scan actually covers 8 to 10 photosensitive globules at a time. When this high-velocity scanning beam strikes an area of globules, a number of secondary electrons are released. When operated in total darkness, the number of secondary electrons released are approximately equal to the number of beam electrons. These secondaries are released with such velocity that they are attracted to the positive potential of the collector ring, and the circuit is closed around the external connections of collector, load resistor R_1, and the signal plate. This is so because the large number of electrons released leaves the signal plate more positive than the collector (since their original potentials are the same), and the electrons are attracted around through the external load to the positive excess at the signal plate. Thus maximum signal current corresponds to dark portions of the scene, just as in the case of the image orthicon.

This release of the electrons from the mosaic leaves the signal plate positively charged with respect to the collector ring. The resulting plus potential however, is quite small, being around plus 2.5 to 3 volts maximum. The efficiency of the iconoscope is quite small compared to the image orthicon, being in the region of 10 to 20% in efficiency.

Consider now what happens when light reaches the photosensitive surface of the mosaic. Each of the photosensitive globules now releases secondary

electrons in ratio to the intensity of light striking its surface. These secondaries are released at low velocity, and are not released with high enough velocity to be attracted to the collector ring. In being released from the surface, however, the element assumes a positive charge. This "charge" is stored in the capacitance of the element to the signal plate, until the scanning beam strikes the charged capacitance. It may now be seen that the number of secondary electrons released at high velocity by the scanning beam is *reduced* in proportion to the positive charge, which in turn was proportional to the light intensity. At this time, the capacitance is obviously discharged, and the resulting current flow is inversely proportional to the amount of positive charge. That is, the secondary electrons flowing through the circuit is reduced by an amount depending upon the magnitude of the plus potential caused by the intensity of light at that point of the scene.

Thus the iconoscope is often called a "storage type" tube, since it does, in effect, store a capacitive charge across each element that is in proportion to the amount of light at that element. When traversed by the scanning beam, the elements are discharged. The output current therefore varies in accordance with the point being scanned, maximum current corresponding with the darker portions of the scene. The light from the scene may be thought of as creating a pattern of charges on the photosensitive surface, which are picked off point by point as the electron beam scans the surface. As pointed out in Chapter 1, the storage capabilities of the iconoscope play an important role in some methods of televising motion-picture film.

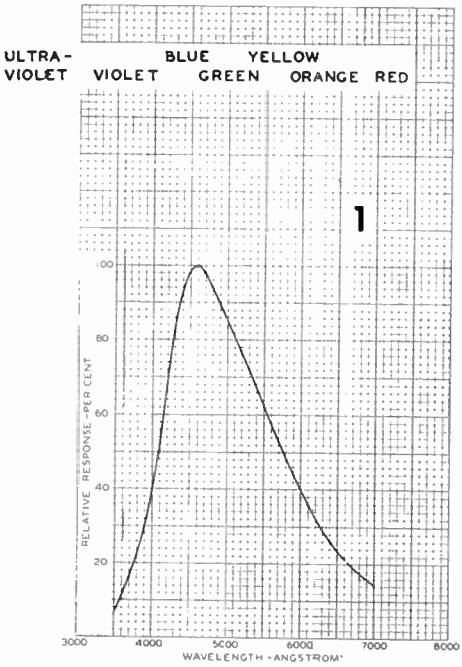

1. Spectral sensitivity characteristic. Curve is taken for equal values of radiant flux at all wavelengths.

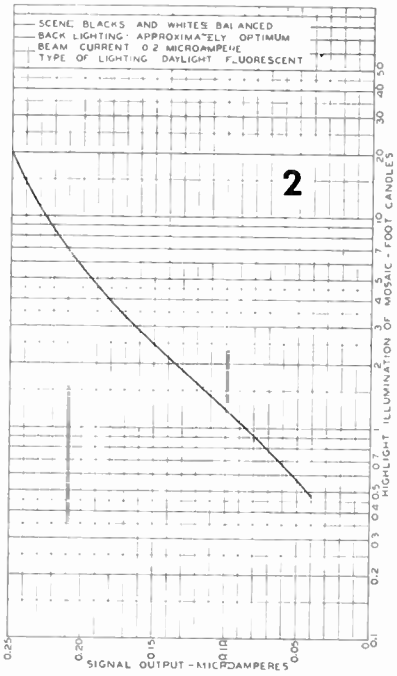

2. Typical signal-output characteristic under continuous illumination.

Figure 2.6C. Courtesy RCA.

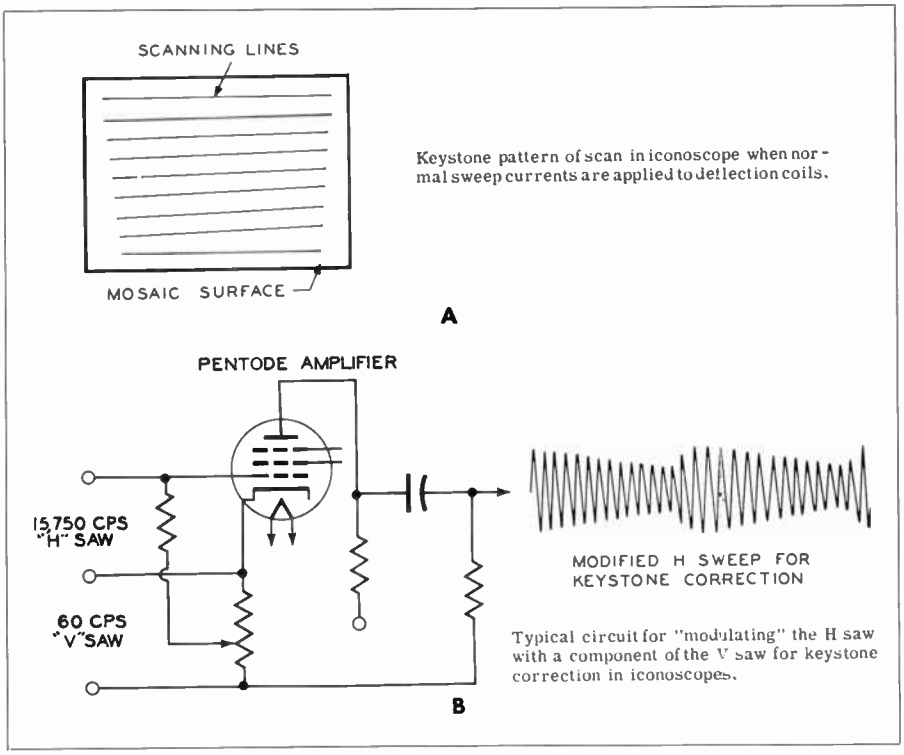

Figure 2.6D.

The dimensions of the photosensitive mosaic is approximately 4¾" wide by 3½" high, corresponding to the 4 to 3 aspect ratio of TV standards. Compare this to the 1.6" maximum across the diagonal of the photocathode in the image orthicon tube, and it is observed that the iconoscope requires a much larger and more expensive lens system for comparative lens speeds. However, in motion picture film telecasting, *the light through the film is projected directly onto the iconoscope mosaic by the projector lens, and no lens system is used on the iconoscope.*

The spectral response and the typical signal-output characteristics of the type 1850-A iconoscope is illustrated in Fig. 2.6C. In graph 1, it is observed that the tube covers the entire color spectrum, but not in a flat response; being most sensitive in the blue region. Graph 2 is the output current-to-mosaic illumination curve. The steady highlight value for slides should be 4 to 6 ft-candles, while a pulsed highlight value of 10 to 20 ft-candles is recommended for film telecasting. The pulsed method of televising film was outlined in Chapter 1, and is elaborated on in Chapter 3. The above values of illumination refer to the actual amount upon the mosaic.

The blanking signals for the iconoscope are applied to the control grid, so that the negative pulses shut off the beam during retrace intervals, driving the pickup tube into maximum current region corresponding to the black region. Thus blanking in this case is similar to the blanking of the picture tube monitor and home receiver kinescope. The circuits for producing and amplifying such signals are similar to those used for the image orthicon as described in the preceding section. It is noted from the table of typical operating characteristics of

the iconoscope that this blanking voltage should have a minimum peak-to-peak value of 20 volts.

Although the iconoscope properly operated will give a highly satisfactory picture, especially as applied to film telecasting, its design characteristics call for more complicated control circuits than does the image orthicon. One of these factors in design is the angle which the neck of the tube containing the electron gun must make with the surface of the mosaic. Such an angle is obviously necessary since the gun end would otherwise obstruct the passage of reflected light through the lens into the face of the tube envelope. Due to this angle, the scanning beam must travel over a longer path to the top of the mosaic than to the bottom. Since the scanning aperture deflection across the surface of the mosaic for a given amplitude of sawtooth current in the deflecting coils is proportional to the length of the beam between the coils and mosaic surface, the top scanning line is longer than the bottom scanning line. The resulting effect is shown in Fig. 2.6D, drawing A. This is called a keystone pattern, and the bottom edge of the picture is shorter horizontally than the top edge. In all iconoscope circuits, a means must be provided to decrease the deflection at the top, and increase the deflection at the bottom. This is accomplished by modifying the horizontal sweep sawtooth currents as shown in drawing B of Fig. 2.6D. A portion of the V saw is mixed with the H saw to obtain the desired H deflection saw shown in the diagram. The potentiometer provides a "balance control" to adjust the balance of the two saws. This waveform applied to the H deflection coils shortens the sweep at the top of the mosaic to that usually obtained at the bottom, providing the proper rectangular aspect ratio of 4:3 in the picture. In regular commercial circuits providing keystone correction, the operator finds a keystone gain control in addition to keystone balance. If insufficient gain is used, the keystone effect is not fully corrected. If gain is too high, overcorrection results and an inverted keystone is produced.

Another defect of the iconoscope is spurious dark-spots formed by a nonuniform rain of secondary electrons upon the mosaic surface. It should be recalled that the output signal of the iconoscope results from a quite small difference in potential created between the mosaic and the collector ring. Since this potential is small, many secondary electrons fall back indiscriminately upon the mosaic instead of reaching the collector. Where this occurs, a reduction of stored charge per picture element results, and bright spots as well as dark spots appear on the monitor and receiver screens.

The correction circuits for this type of tube defect are somewhat complex, and even more complex to operate. The correction is accomplished by means of a *shading generator*, which produces a number of different waveforms, amplitude and phasing controls. By means of the shading signals the operator is provided with control over the spurious signals from the iconoscope, by mixing in such shading components as to cancel the effect of the defects in the picture. Since the unwanted components of the iconoscope signal are nonuniform, they may occur anywhere in the picture: upper, lower, left or right. A shading control operator spends a great deal of time in becoming familiar with such occurrances, and still more time in learning the necessary compensating waveform, amplitude and phase adjustments required to "shade out" the spurious signal. Fortunately, the restrictions of the use of the iconoscope to motion picture film and slides minimizes the necessary controls and time consumed in mastering the shading process.

Fig. 2.6E illustrates in simplified form a typical shading generator and associated controls. The controls may be grouped generally into horizontal and vertical, and subdivided as follows:

Horizontal Controls for Shading

H Sawtooth	H Sinewave
H Parabola	H Sinewave Phase

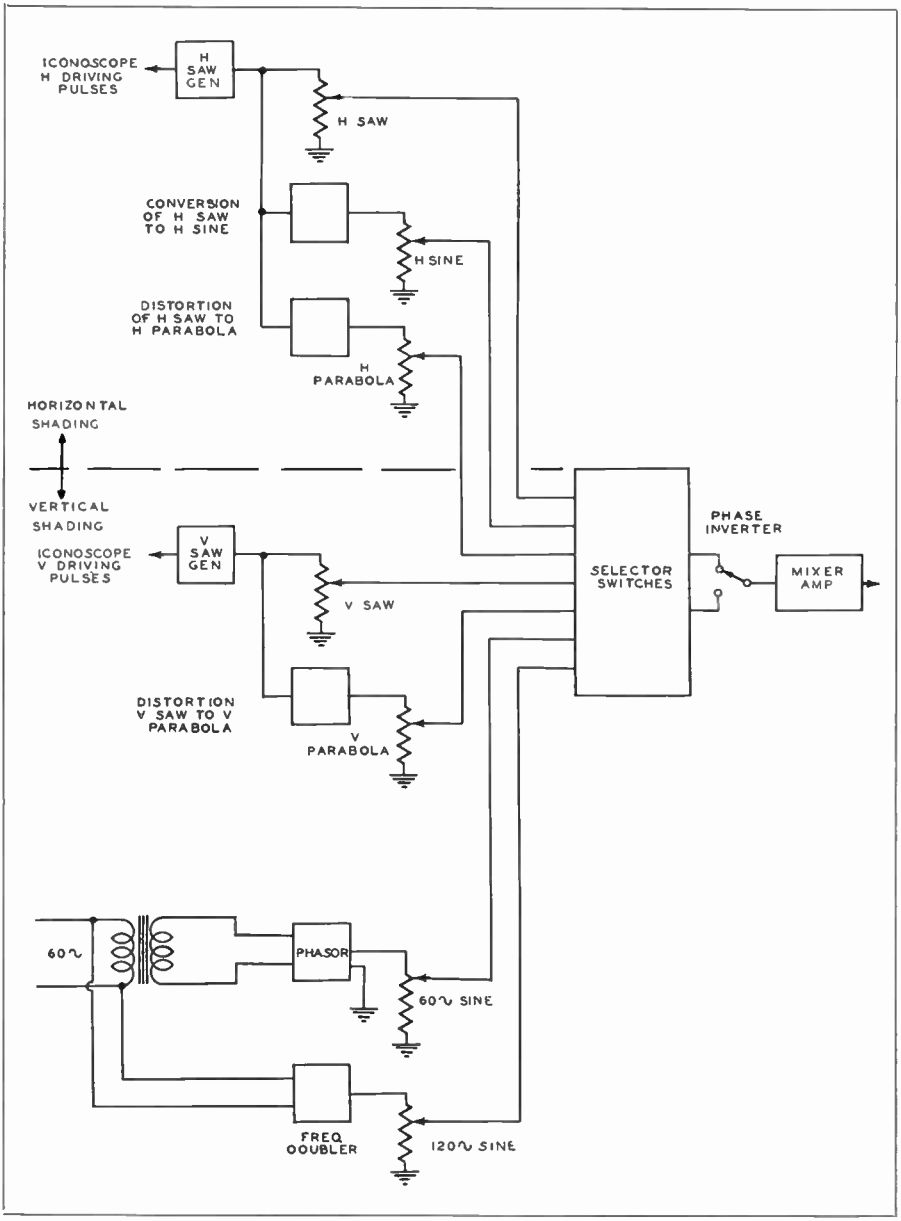

Figure 2.6E. Simplified diagram of shading generator for iconoscope tube.

Vertical Shading Controls

V Sawtooth	V Sinewave
V Parabola	V Sinewave Phase

Observation of Fig. 2.6E reveals that the shading generator is synchronized with the iconoscope by driving pulses used for iconoscope sweep. As shown, horizontal driving pulses from the H camera sweep are used to trigger the H sawtooth generator in the shading device. The other H shading waveforms are cre-

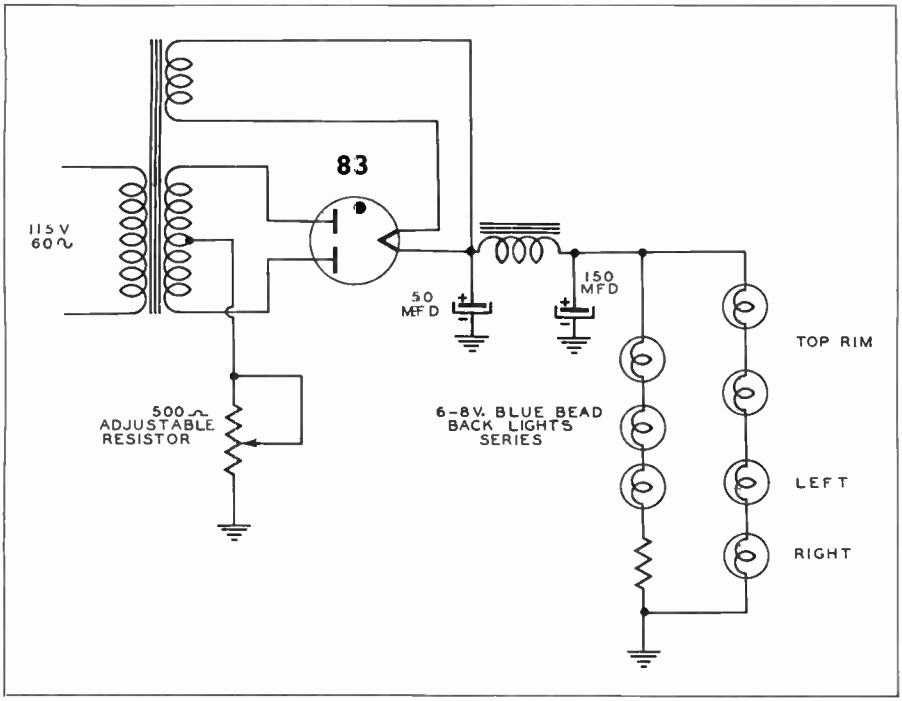

Figure 2.6F. Typical power supply for rim and back lighting for an iconoscope pickup tube. The supply must be a well filtered DC to prevent stray fields close to the mosaic. Batteries are sometimes used in this application. Separate supplies for rim lights and back lights are sometimes used to provide individual control over the lighting at these points.

ated from the output of the saw oscillator; the sine-wave being formed by an LC circuit converting the applied saw curve to sinewave, and the parabola being formed by a "distortion" amplifier clipping part of the wave and forming the other part into a parabola. Vertical driving pulses are likewise used to trigger the shading generators sawtooth oscillator, the V parabola being formed from a similar distortion amplifier. The V sinewave (since the V sweep frequency is 60 cps) is taken from the regular 60 cps power line. Both 60 cps and 120 cps sines are provided in this section of the generator.

Controls on a shading device provide both amplitude and phase controls, and selector switches to allow selection of any one or combination of waveforms. The output of the mixer amplifier feeds the composite shading signal to one of the iconoscope amplifier stages, usually at a low level point such as the first stage of the preamp. As an example of its use, an H saw shading signal will provide darker shading toward the left of the picture, and by reversing the phase, toward the right. V sawtooth shading may provide progressively darker shading toward the top of the picture, and by reversing the phase, toward the bottom. Use of the other waveforms provide a means of controlling the shading at any point in the frame.

Another feature in the operation of the iconoscope pickup tube is a means of providing *rim lighting* and *back-lighting*. If the metal support used on the mosaic to hold it rigidly in position inside the glass envelope is not illuminated, a phenomena known as *edge-flare* results. This is a highly objectionable flare or streaks of light on the outer

edges of the reproduced picture. To prevent this, the "rim," or metal support immediately adjacent to the photosensitive mosaic, is illuminated with several pilot bulbs of the 6-8 volt variety. Since it is very important to prevent stray magnetic fields from influencing the low level video signal at this point, DC is used for this lighting. Although there is a variance in method, there are usually two bulbs for top rim illumination, and one each on right and left side. The mounts for the bulb reflectors are adjustable, so that the positions of the bulbs may be varied for best effect. *Back lighting* means that a small amount of light is used at the rear of the signal plate which does not shine directly upon the front side, or mosaic. This raises the efficiency of the tube, since it releases electrons from the caesium coating on the inside of the glass bulb where they collect instead of reaching the collector plate. The number of 6-8 volt pilot bulbs used here is variable, ranging from one to three in different installations. They are also operated from a DC source of power supply. Fig. 2.6F illustrates a typical arrangement for rim and back lights. It may be noted that the applied voltage is made variable. This is important since no two iconoscope compare in optimum light value necessary for optimum performance. Further technical details of the television camera are included in sections 6.2 and 8.9.

2.7 *Camera Mounts*

The mountings used for TV cameras may be generally divided into tripods, dollies, and cranes. Tripods may be either fixed or mobile, while a dolly or crane is usually mobile. Any type of camera mount must be very sturdy to provide smooth panning and general operation of the 125 pound (approximate) weight of the camera.

The camera mounting itself is made directly to a device known as a *friction head.* A typical friction head is shown in Fig. 2.7A, mounted upon a fixed type of camera tripod. This head provides the means of tilting and panning operations

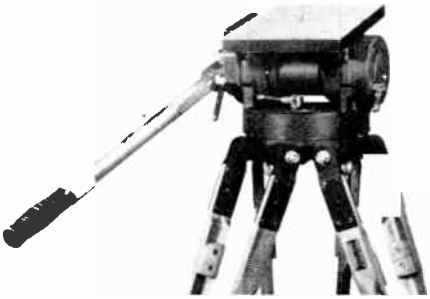

Figure 2.7A. Courtesy Camera Equipment Company.

for the camera. The camera operator uses the long handle shown in the photo to tilt the pickup head in any angle up or down that may be called for in production. A full 360 degree rotation horizontally is provided so that panning may take place over any possible latitude that might be necessary. The camera is mounted upon the friction head by means of the single screw shown. The friction head, in turn, is attached to the tripod by means of a single hand operated wing nut and lever. The long handle is telescopic for adequate length adjustment, and is detachable.

The amount of friction for tilt and pan movement is made adjustable by a friction shoe arrangement attached to

Figure 2.7B. Courtesy Camera Equipment Company.

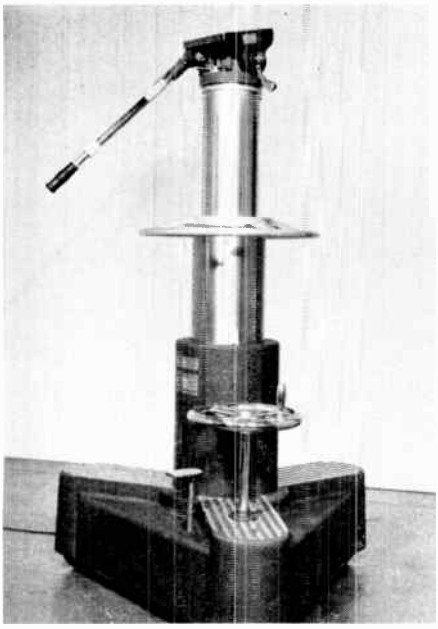

Figure 2.7C. Courtesy RCA.

an external handle. The head may be locked into a fixed position when desired.

Each leg of a tripod is made adjustable in length, and is usually marked off in inches or some form of calibration with a means of locking into place. This is necessary to obtain an absolutely level placement of the camera from its initial mounting position. The tripods are constructed so as to be easily portable, collapsing into a handily carried package.

Fig. 2.7B illustrates a friction head and tripod mounted upon wheels to provide mobility of the camera. With this type of camera mount the camera operator usually sits on the seat provided for that purpose, and the tripod (more rightly called dolly in this instance) is moved about by a *dolly operator* whose sole function is to move the dolly as directed. When a dolly operator is employed, an extra pair of headphones is provided for his use so that the technical director in the control room may direct his movements.

Another type of TV camera dolly is illustrated in Fig. 2.7C. It is designed primarily for studio operation or any indoor location where telecasts might originate. The camera is mounted on the

Figure 2.7D. Studio scene at WFIL-TV. The first camera to the right is mounted upon a crane, moved about by the crane operator, shown wearing headphones, at the rear of the dolly. Courtesy RCA.

usual friction head shown. The wheel with the crank handle seen mounted on the lower platform provides for an adjustment of camera heights from 40 inches to five feet above the floor. Due to the excellent mechanical balance of the associated gear mechanism, very little effort is needed in this adjustment. The large wheel shown about the center of the cylindrical pedestal steers three rubber-tired wheels upon which the entire pedestal is mounted for mobility. The pedal which may be seen on the bottom platform lowers a caster which in turn raises a pedestal wheel, allowing complete maneuverability about a given point.

The *crane* type of camera mounting is illustrated in use in Fig. 2.7D (first camera to right). In this case the camera is mounted upon a boom which may be raised, lowered, or swung completely around to obtain unusual angle shots. The dolly is maneuvered by the dolly operator shown wearing headphones to the rear of the dolly crane. For complete mobility, the rear wheels may be turned at right angles, allowing the rear end of the dolly to be swung around while the front end of the chassis pivots on a caster. This caster may also be lowered simultaneously with the turning of the rear wheels. Some cranes of this type employ a fifth wheel so arranged that the dolly may be moved sidewise, increasing the scope of mobile operations. The actual camera lens height above the floor may be varied from 2 feet to as high as 15 feet for some of the larger cranes. The second camera to the right in Fig. 2.7D is mounted upon the pedestal type dolly described previously.

There are two prime requirements in any type of camera dolly used for television: quiet movement and ease of operation. Rubber-tired wheels are obviously necessary, and a routine maintenance schedule of greasing and oiling is highly important. Dolly maintenance is described in Chapter 8, along with maintenance hints for all TV studio equipment.

CHAPTER

3

Inside the TV Control Room

3.1 General Outline of TV Control Room Equipment

The scope of equipment required in TV control rooms varies widely depending up the program range of the particular location. Small independent and network affiliated stations in small communities may have very limited equipment, such as film chains and slides for station identification, with no locally originating programs. On the other extreme, a station in a large city originating network programs will have multiple studios with one to six cameras in each, complex associated control room equipment, a master control, many film and slide machines, and elaborate distribution facilities for local and network routing of the signals. In such cases, the audio facilities alone including program audio and intercom system may be triple the cost of the entire equipment in small TV stations. Because of this wide range of requirements, the author has chosen for discussion in this section a typical setup midway between the extreme cases cited above, such as a network affiliated station with one studio, a control room for the studio, combined with a master control and film projection room.

This approach is most appropriate since every type of control room equipment may thus be covered, the only difference to any particular application being in more or less of the same type of control units involved.

Fig. 3.1A illustrates an example of a typical control room layout. Drawing A is a birdseye view, drawing B showing the orientation in relation to the studio and camera heights. This is a "platform" type of control room very popular in practice. Such design enables the audio operator and program director to view both the studio action and the monitors in the control room. The units immediately in front of the video operator (V.O. in drawing A) are the individual camera control units for the studio cameras. Those in front of the technical director (T.D.) are the switcher and mixer units which are usually operated by the technical director upon directions from the program director. The audio operator (A.O.) operates the usual audio switcher and mixer, and the two turn tables shown in the diagram to his left. The program director and technical director have intercom facilities enabling them to converse with the production and technical personnel on the studio floor. The audio operator is provided with similar facilities so that he may instruct the microphone boom operators (discussed in next chapter). Drawing B is a side view of the layout illustrating the visibility necessary for the control room personnel.

Fig. 3.1B is a simplified block diagram of the major video units in the combined studio, film and master control room. Each studio camera is connected to its respective camera control unit by means of flexible coaxial cable of about 75 ohms impedance. These units contain a picture tube showing the picture output of the camera, and a small oscilloscope to monitor the associated waveforms. It is here that any necessary adjustments during a show for picture contrast, brightness or shading are carried out. The video level

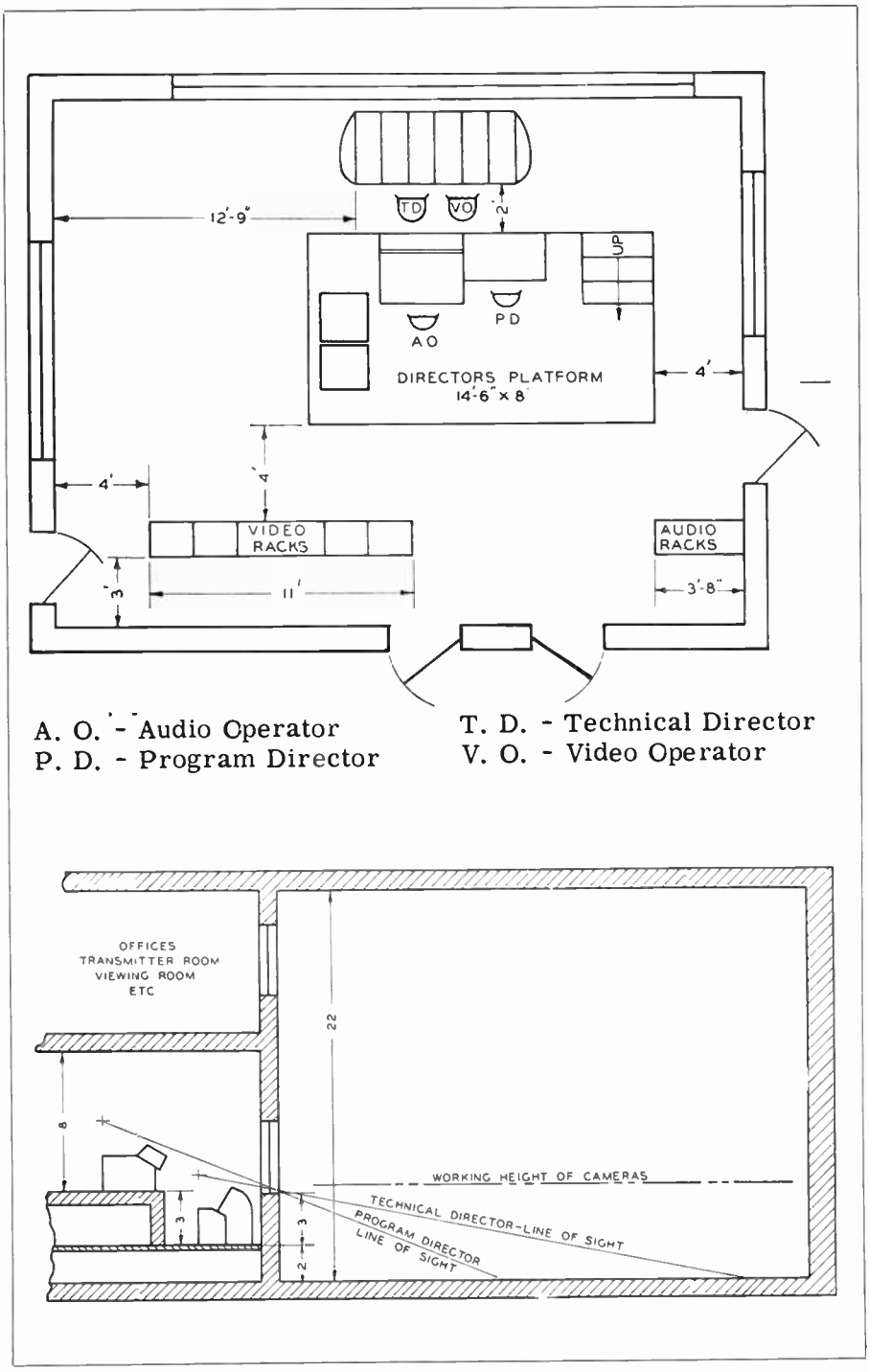

Figure 3.1A. Courtesy RCA.

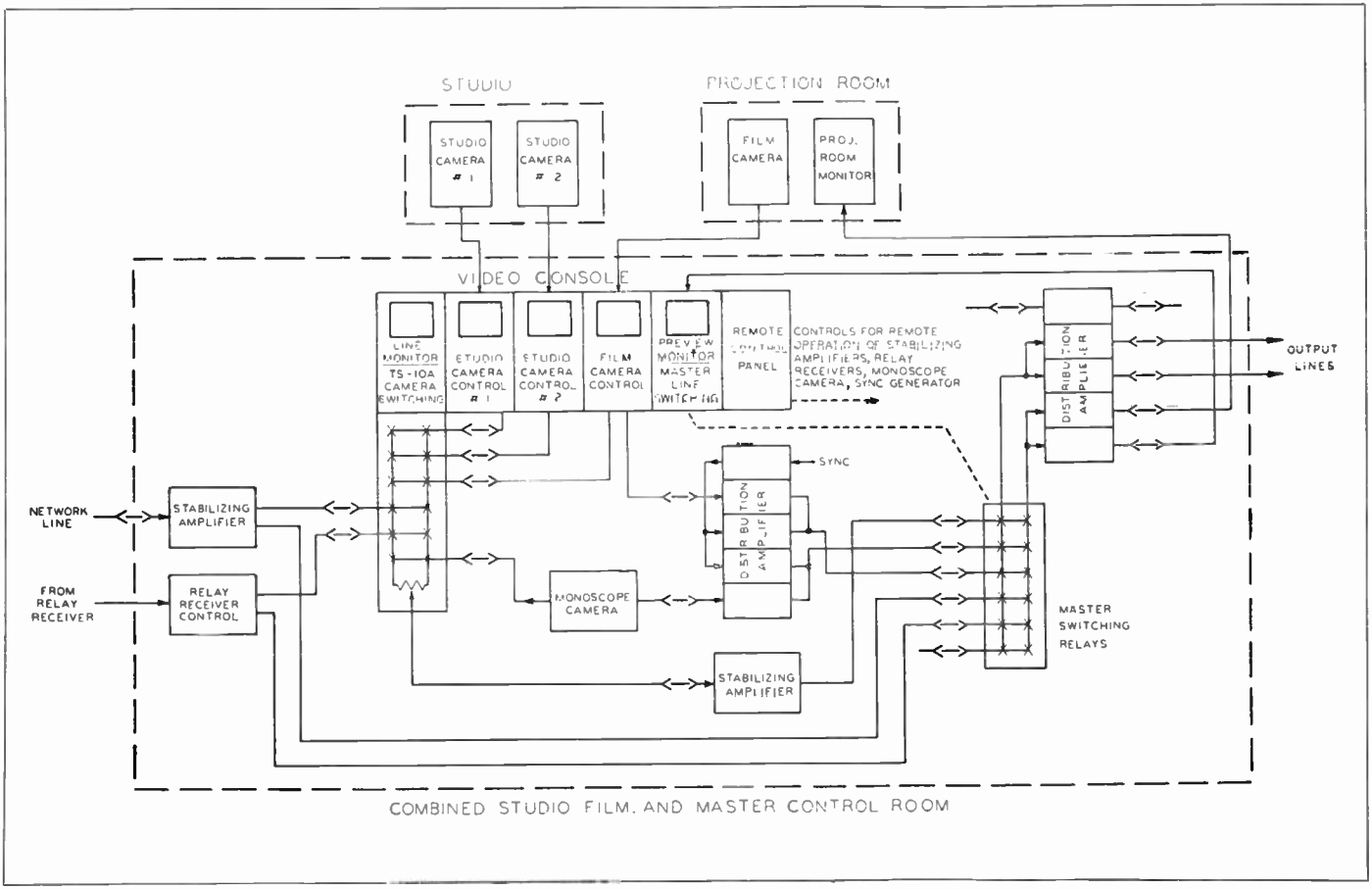

Figure 3.1B. Typical layout of control room equipment as suggested by RCA <—> designates video jacks. Courtesy RCA.

into the switcher is also adjusted at this point, and is determined by observing the signal levels on the oscilloscope. It is seen that the control unit for the film camera is also in this chain of units, and provides the same facilities for film telecasting as those for the studio cameras. The camera switcher to the left serves to select the output of either studio camera or the film, or such effects as lap dissloves and superimposition of any two signal sources. Its associated line monitor shows the picture thus selected going to the master switcher. The master switching panel contains a number of pushbuttons so that the operator at this point may select any of six incoming signals (such as from studio, remote point coaxial cable, microwave relay receiver, etc.), and feed them to either of two outgoing lines. This unit has a preview monitor enabling preview of all incoming signals. The pushbuttons on this unit operate rack-mounted master switching relays used in the video circuits. The remote control panel to the extreme right of this video console provides means of making video and sync level adjustments of the associated amplifiers which are located in racks. The sync pulses from the main sync generator, which is also located in the control room (not shown in diagram), are fed to the video signal at the distribution amplifier. Sync is always mixed into the video signal at some point past the switcher unit, preventing possible momentary loss of sync when switching between signal sources.

The stabilizing amplifiers shown contain special keying and clipping circuits which remove any low-frequency disturbances that may be present from remote points, and also match the video and sync levels of remote signals to those of the local cameras. A number of video jacks are shown in the diagram. These are usually of the rack-mounted type, and enable the operators to patch any signal source to any switching arrangement, and allow quick rerouting of signal in case of trouble in any particular control unit. The monoscope camera is a special device for transmitting a test pattern for test and alignment purposes, described in this chapter.

Fig. 3.1C is a simplified block diagram of the audio section of a typical TV control room. The arrangement shown here provides the following general facilities:

1. Inputs for 4 studio microphones, and provision for 4 additional mike lines which may be patched to consolette input circuits.
2. On-Air signals for studio and film projectors.
3. Studio monitoring speaker for cueing or talk-back during rehearsal.
4. Intercom circuits as follows: production circuits for program director, stage director, and production personnel; talkback for audio engineer to mike boom operators; talkback for technical director to camera and dolly operators.

The audio consolette must provide for switching and mixing the audio signal from the mikes, the film projectors, and remote or network lines. It is also generally used to mix and switch the outputs of one or two turntables. The signal from the turntables may be switched into the outgoing line, or fed to the studio loudspeaker for program background purposes in special cases.

All of the units briefly outlined in this section are detailed in the following sections of this chapter. However, since all the video units are "master minded" in operation by the synchronizing generator, this unit will be taken up first.

3.2 Waveforms Required for Synchronization

The sync generator provides the electronic coordination of the entire TV transmission system. This means that the receiver and monitor kinescope picture tubes have their respective scanning beam start to the left of a particular line at the same time as the camera scan, sweep the line at the same rate, start the retrace from right to left at

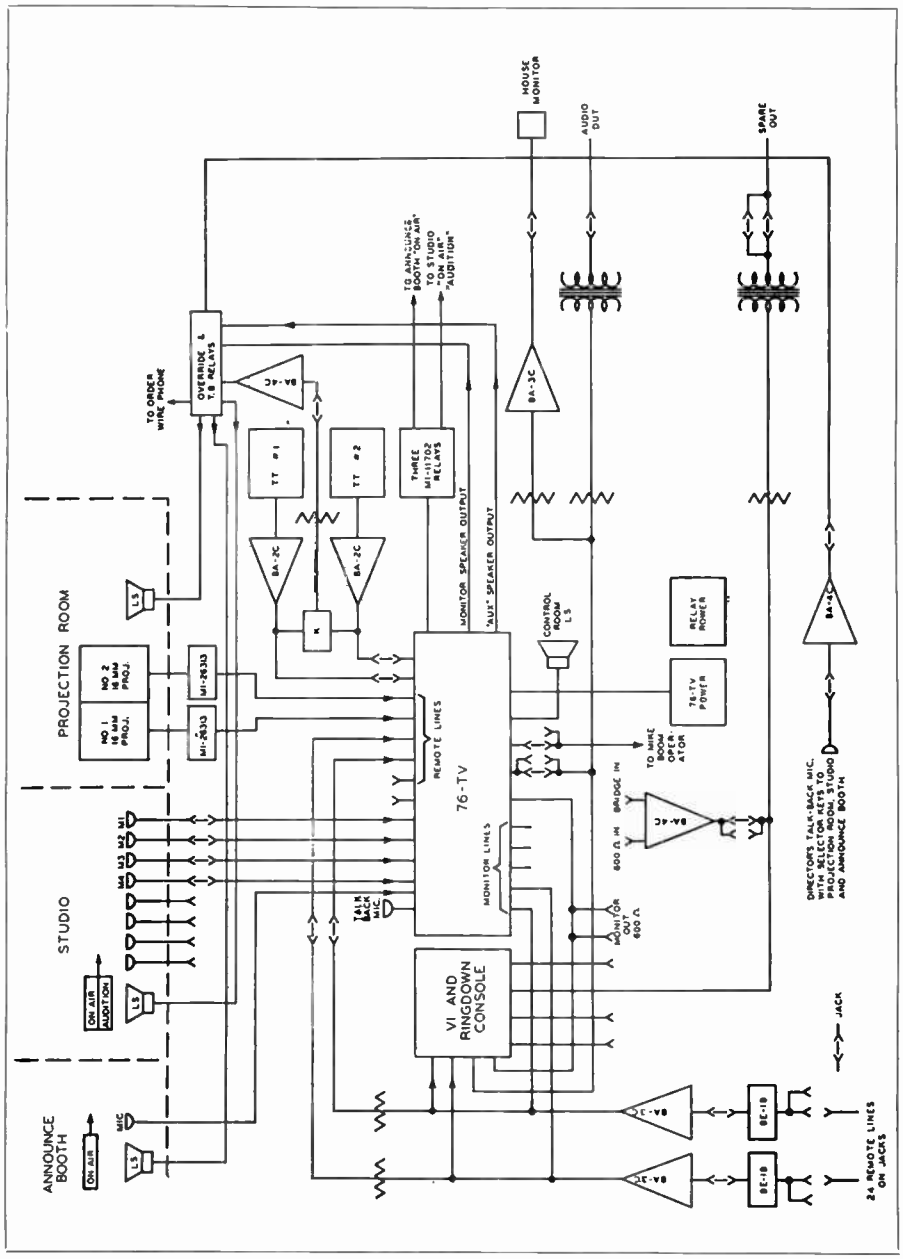

Figure 3.1C. Typical audio facilities for television control rooms. Courtesy RCA.

the same time, blank this retrace at the same time, and returns from bottom right to top left at the same time for a start of the next field. The receiver and monitor kinescopes have their own deflection and blanking means; it is the business of the sync generator to "trigger" the operation of picture tube scanning and blanking with those at the camera.

It is understandable then that the sync generator is necessarily rather complex in function. It must generate not only precisely *timed* pulses, but precisely *shaped* pulses as well. A thorough understanding of the sync generator is not beyond the scope of the TV operator if he will take the pains to dig into the following explanations of this chapter. The engineering and development of circuit designs are not important to the operator. What *is* important is familiarity with the pulses in the required composite TV signal, their purpose, and how the sync generator first creates, then forms and mixes the various pulses together for combining with the actual video picture information from the camera.

First then let's review how many functions are required in this system of coordination, and where they must be performed.

1. The photosensitive surface of the camera pickup tube looking at the scene to be televised must be scanned from upper left to lower right as outlined previously, so that the picture is transmitted in "elements" of instantaneous value. The pickup head contains its own H and V deflection mechanisms, and H and V blanking mechanisms. Since it is the function of these mechanisms which determine where the scanning beam will be at any given time, they must be so "timed" from the one coordinating headquarters — the sync generator. Therefore H and V *driving pulses* are supplied to the camera H and V sawtooth deflection generators from the sync generator. *The camera deflection generators cause the scanning beam to trace across the target, the driving pulses trigger the retrace.* Since these driving pulses do trigger the time of retrace (section 2.3, Chapter 2), they are also used to trigger the blanking, so that the retrace lines are made invisible.

2. Consider now the receiver in the observers home. This kinescope is being scanned by its electron beam (which is being modulated in intensity by the video picture information) due to the action of its own deflection generators. Therefore, at the same time that a driving pulse is fed to the studio camera, a sync pulse is fed to the remote receiver, as well as a blanking pulse to drive the kinescope tube into the cutoff bias region, or black. The sync pulse initiates the kinescope retrace, the blanking pulse makes the retrace invisible to the viewer. Such action occurs on both horizontal and vertical scanning functions.

As a starting point in our study, we may list 8 general types of synchronizing signals delivered to the overall system by the sync generator as follows:

1. Horizontal driving signal. Consists of short duration square wave pulses at the horizontal scanning frequency of 15,750 cps fed to the sawtooth generator in the camera to trigger the horizontal retrace voltage for the pickup tube. These pulses also trigger the blanking generators in the camera so that the target of the image orthicon (when used) is driven negative, repelling the scanning beam so that the signal corresponds to black, thus blanking the retrace action. Although formed at the same *time* as the horizontal sync pulse which is part of the radiated carrier wave from the transmitter, the driving pulses are *not* transmitted, but fed only to the cameras.

2. Vertical driving signal. Consists of square wave pulses of longer duration than above (equal in width or time to 15 to 20 H driving pulses) and occur at the vertical frequency of 60 cps. These pulses are also fed only to the camera, and trigger the camera vertical sawtooth generator for the pickup tube. They are also used to trigger the camera blanking generator, thus blanking the vertical return trace of the pickup tube.

3. Kinescope horizontal blanking signal. Consists of square wave pulses at the horizontal scanning frequency of 15,750 cps. They are added to the transmitted video signal for the purpose of driving the receiver kinescope into the

cutoff region, blacking out the retrace of the horizontal lines. This signal is transmitted at the "maximum black" level, and forms the "pedestal" voltage upon which the horizontal sync pulse is transmitted in the "blacker-than-black" region.

4. *Kinescope Vertical Blanking Signal.* Longer duration pedestals than above transmitted at the same black level at the vertical frequency of 60 cps. Their purpose is to drive the kinescope tube into the cutoff region, blacking the tube during the longer vertical retrace time.

5. *Horizontal synchronizing signal.* Short duration pulses at 15,750 cps, slightly narrower than the horizontal pedestal upon which it is properly positioned in time, used to trigger the horizontal sweep generators at the receiver kinescope initiating the return sweep at the end of each line, occur at the same time as the H driving pulses for the camera.

6. *Vertical synchronizing signal.* "Serrated" type pulses of longer duration than above at the vertical frequency of 60 cps. They are properly placed in time upon the vertical pedestal, or blanking pulse. Used to trigger the vertical sweep generators at the receiver kinescope, initiating the return of the beam from bottom to top at end of each field. Reasons for the "serrated" form were briefly covered in section 1.10, Chapter 1, and will be amplified further later in this section.

7. *Equalizing signal.* Consists of short duration pulses also placed upon the vertical pedestal voltage, and immediately precede and follow the vertical sync pulses. They are used to achieve uniform vertical firing of the receiver retrace, and prevent *line pairing* otherwise resulting in interlaced scanning. This was briefly discussed in section 1.10 of Chapter 1, and further discussed later in this section.

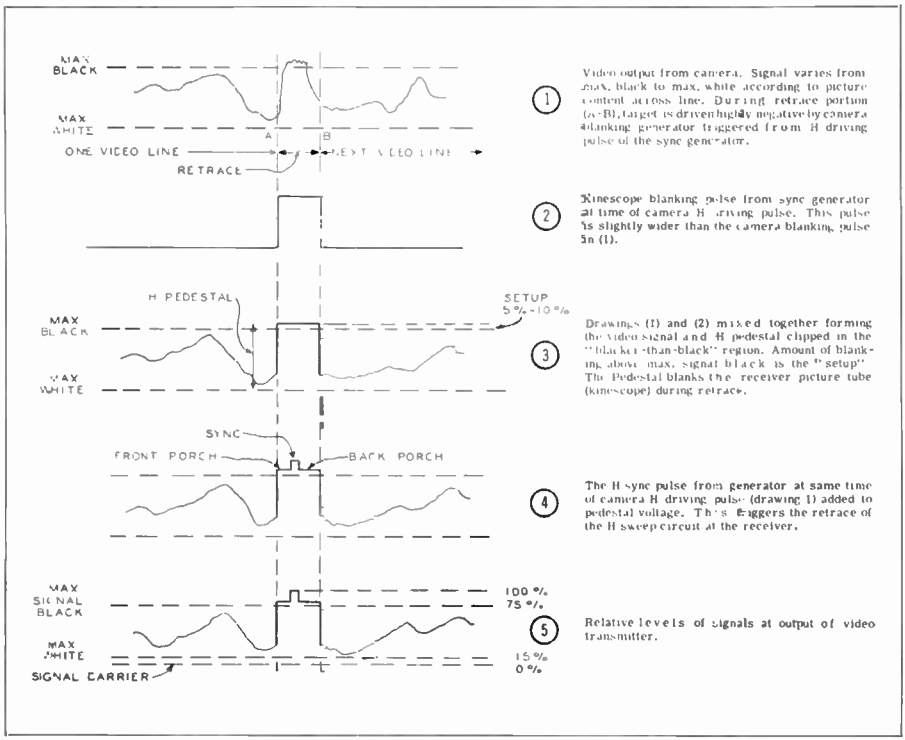

Figure 3.2A. Formation of blanking and sync pulses on video line signal.

8. Oscilloscope driving signal. Used only to provide waveform monitoring sweeps for the oscilloscopes at the studio or transmitter. Since it is best to obtain oscilloscope patterns that are two lines or two fields in length, these driving signals are one-half the line and frame frequencies; namely 7,875 for the line waveform monitoring and 30 for the field waveform monitoring.

Fig. 3.2A illustrates what happens at the line frequency. Drawing 1 shows the camera video line signal, with the retrace portion at the end of one line and beginning of the next line. At this time, the camera blanking generators are triggered from the H driving signals which cause retrace, and drives the video into the black reference level. Drawing 2 illustrates the kinescope H blanking pedestal as generated by the sync generator at the same time as the camera H driving pulse. Drawing 3 shows the addition of (1) and (2), clipped by means of "clipping amplifiers" to a predetermined level. The "setup level" is also shown here. Drawing 4 shows the addition of the H sync pulse at the same position in time as the H driving pulse of the camera. The distance from the start of the pedestal pulse to the start of the sync pulse is known as the "front porch"; the distance from the trailing edge of the sync pulse to the end of the pedestal is the "back porch." Drawing 5 illustrates the comparative levels as they should appear at the output of the TV video transmitter. Maximum white level is held close to 15% of maximum carrier, and maximum black level is set at 75% of maximum carrier voltage. Thus the sync pulses in the "blacker-than-black" region are the only pulses which drive the carrier to 100% modulation.

Fig. 3.2B shows the definition of terms used in describing pulse characteristics. Drawing (a) shows the leading and trailing edges of a pulse. Drawing (b) illustrates the duration of H, or 1 H. This distance is the time from the leading edge of one H sync pulse to the leading edge of the next sync pulse. This may be seen to be the length of

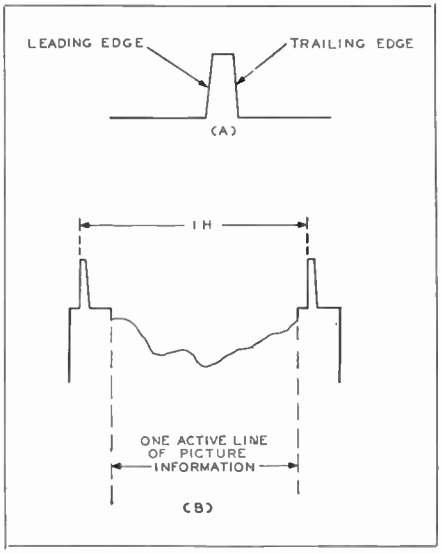

Figure 3.2B. Illustrating the definition of the terms "leading edge" and "trailing edge" of a pulse, and the meaning of 1 H.

one horizontal line of picture information. The reader should observe here that all of this interval does not contain "active" picture information. The time involved includes the back porch of one blanking pedestal and the front porch of the next blanking pedestal, therefore includes one whole horizontal blanking pulse. Therefore, 1 H is the line interval of $\frac{1}{15{,}750}$ or 63.5 microseconds. The time of the active scan is 63.5 minus the time of the H pedestal (0.18H) which is 63.5 $\times$ 0.18 or 11.43 microseconds. Thus 63.5 — 11.43 is 52.1 microseconds of active line scan. Refer to the table in section 1.10 of Chapter 1 for the time of the various pulses in relation to H. The reader should be able to quote this table from memory.

It is now possible to discuss in detail the composite TV waveform as illustrated in Fig. 3.2C. This illustrates the relative levels and timing of both H and V pulses, as well as the allowable tolerances. The necessary shaping is also shown in this figure.

Drawings (1) and (2) in Fig. 3.2C show the H and V pulses much as we

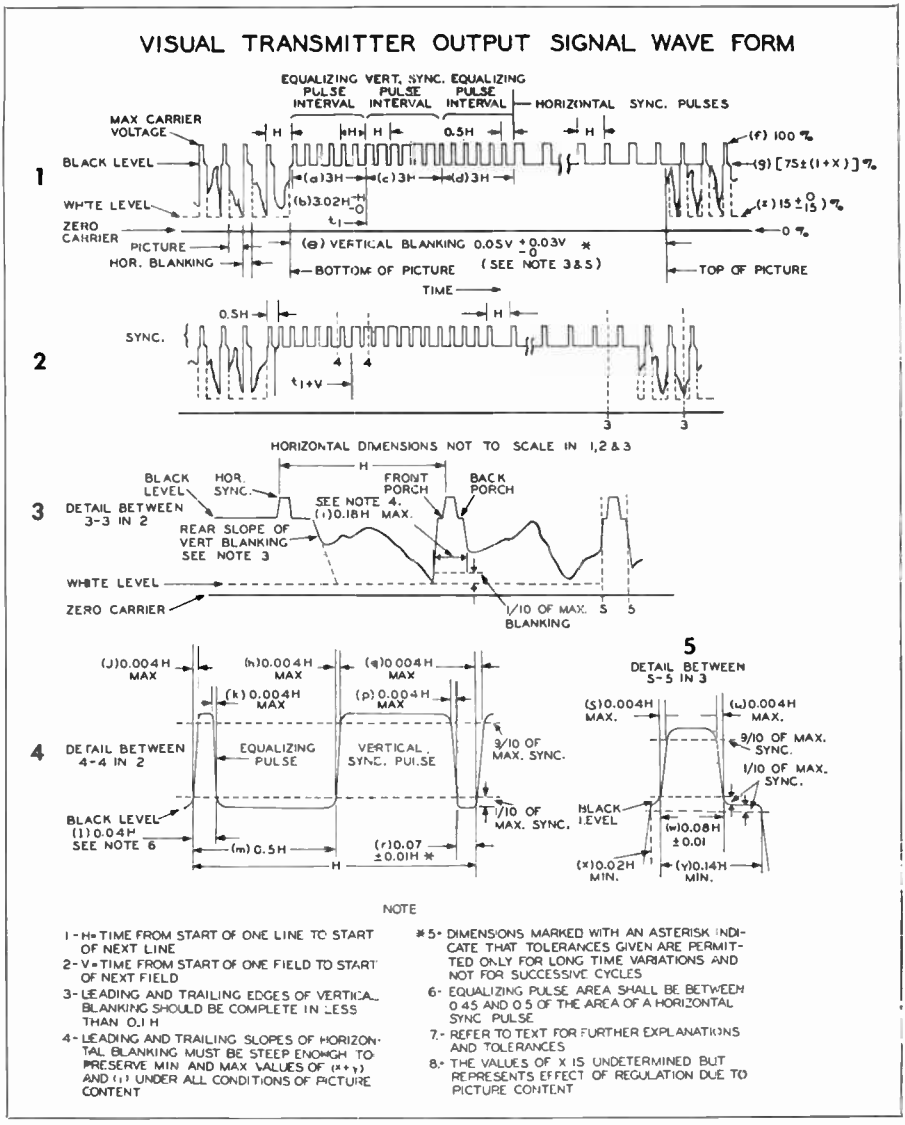

Figure 3.2C. Courtesy RTMA.

have discussed them in this section. At the left are the last few lines of a field, showing the H pedestals and sync pulses. Upon reaching the bottom of the picture (end of a field) the V blanking takes over. The equalizing and vertical sync pulses are constructed upon this V pedestal. The equalizing pulses assure that the receiver integrating circuit "fires" the V retrace at the same time and level for each field as discussed earlier. The actual V retrace occurs during the V sync pulses after the first six equalizing pulses, thus giving positive assurance that the retrace occurs well after the kinescope screen is blanked. Horizontal sync is maintained during this vertical blanking by the equalizing and serrated vertical sync pulses. At the conclusion of this V blanking pedes-

tal, the scanning beam at the receiver has been returned to the top of the picture as shown, and the next field is started.

Details of the H blanking and sync pulse are shown in drawing 5 of Fig. 3.2C, which details the area 5-5 in drawing 3. It is noted here that the sides are not exactly straight, since this would correspond to an instantaneous change of infinite value of voltage impossible to obtain in any amplifier. The sides in this case are "sloped" an amount corresponding to a maximum of 0.004 H, which means 4 thousandths of 63.5 microseconds. (See Note 4 of the Fig.) The duration (width) of the blanking pulse must be sufficiently long to cover the H retrace in the most inefficient receiver. The sync pulse is delayed from the start of the blanking pulse to form the front porch, so that blanking of the kinescope is assured before the retrace is triggered. Drawing 3 illustrates the details of the trailing edge of the vertical blanking and the following H line blanking and sync. Drawing 4 details the sixth equalizing pulse and first vertical sync pulse. The action of these pulses will be reviewed and presented in greater detail at this time before actual functioning of the sync generator is outlined.

The sequence of pulses as shown in drawings 1 and 2 of Fig. 3.2C should become so familiar to the reader that he may draw them roughly from memory. Interlacing of the scanning lines is revealed in drawing 2 which shows the time-displacement of the H blanking at the left of the V blanking to be 0.5H with respect to those at the number 1 drawing. This is to say, that if drawing 1 was the first field of a complete frame, the lines of drawing 2 fall in alternate positions to the lines of field one which is a time-displacement of one-half line interval or 0.5H. Also to be remembered from these drawings are the following facts:

1. The six equalizing pulses may be seen to be equal to 3H, or twice the line frequency.
2. The V sync pulse interval consists of six wider pulses (actually a single wide pulse with six slots making it appear to be six separate pulses) also at 3H interval or twice the line frequency.
3. Followed by six more equalizing pulses identical to those preceding the V sync interval and
4. H sync pulses transmitted for the remainder of the V blanking pulse. In addition to the above the reader should keep in mind that regardless of the purpose of these pulses, they must also maintain H sync of the receiver. The equalizing pulses maintain interlacing and H sync, the V sync pulses trigger the receiver vertical retrace and maintain H sync, and regular H sync pulses following the last equalizing pulses maintain H sync. It is this need for maintaining H sync during the V blanking interval that the vertical sync pulse must be split up into serrations. The "slots" are approximately equal in duration to the H sync pulses, and since they are of twice line frequency, *every other* serration maintains the H sweep oscillator in the receiver in proper sync. This is described below. Since the equalizing pulses are also of twice line frequency, *every other* pulse maintains H sync, also described below.

The most natural question at this point is why the equalizing pulses and V sync pulses are made twice the line frequency ($2 \times 15{,}750$ or 31,500 cps). When we speak of the V sync pulses being of twice the line frequency, bear in mind this relates to the serrations of the actual pulse, but that this pulse occurs at the field rate of 60 times per second, or 60 cps.

The answer to this question is that since the rasters produced in alternate fields are displaced by one-half of a line (interlaced scanning), means must be provided so that a choice of the proper alternate pulse makes available an H sync pulse at the end of the scanning line for either *even* or *odd* fields.

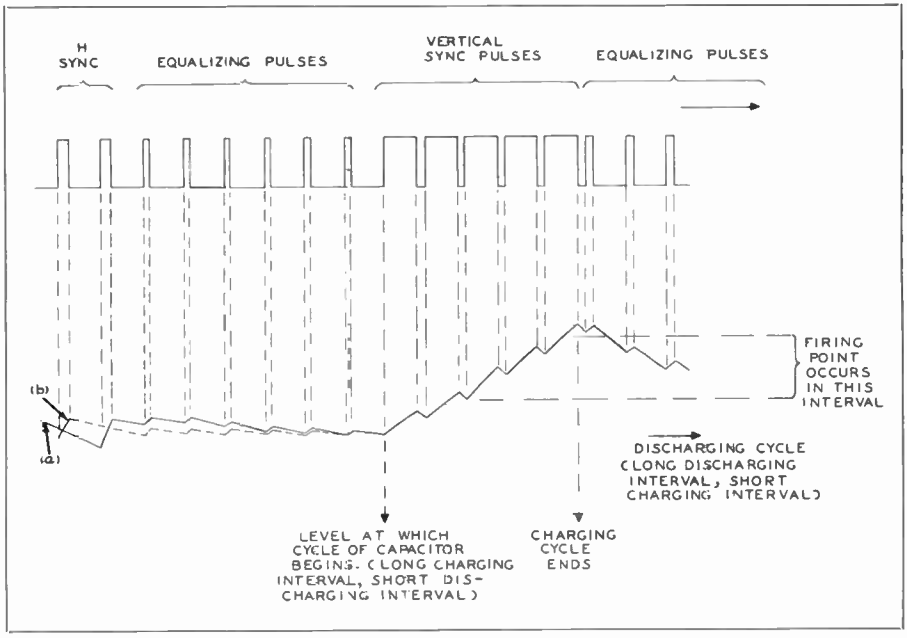

Figure 3.2D.

Since the pulses are twice the line frequency, they are 0.5H (half-line) apart as shown in drawing 1 and 2 of Fig. 3.2C. Hence either the interval H or H/2 is available. This feature is important in maintaining accurate interlacing and will become clearer as the discussion progresses. Lack of proper interlacing results in *pairing* which seriously affects the picture quality. Section 1.10, Chapter 1 should be reviewed at this time.

It is recalled that an integrating circuit in the receiver builds up a charge across the integrating capacitor to a voltage sufficient to trigger the vertical sweep oscillator to cause retrace of the beam from bottom to top of the raster. Since there is a half-line difference between fields, the integrating capacitor would (without equalizing pulses) have a different charge upon it at the start of each charging cycle (vertical sync pulses), hence would fire at a different time for each field. It is the purpose of the equalizing pulses to equalize this difference between fields of the charging action on the integrating capacitor. Fig. 3.2D illustrates this function. At the left of the drawing it is noted that curves a and b are a "half-line" out of step, representing the charging curves of an odd and an even field. This would obviously cause a discrepancy in timing of the integrating capacitor charging cycle. When the equalizing pulses start, the capacitor charges over a very small time, and discharges over a relatively long time. At this point, regardless of whether the field is an even one or an odd one, the integration takes place at the same relative time ahead of the vertical sync pulses. By the time the first V sync pulse arrives, the curves a and b are shown almost converged, showing that the capacitor will start charging at approximately the same level for each succeeding field. The integrating capacitor is charged over the duration of each V sync pulse as shown until by the end of the sixth serration, the capacitor has reached the voltage at which it will discharge through the circuit which triggers the V sweep oscillator, causing the beam retrace from bottom of raster to top. Of course it is

necessary for the beam to remain cut-off during the rest of the retrace, hence the blanking pedestal is in effect for some time longer. A second set of equalizing pulses follows, during which time the capacitor is *discharged at an equalized rate*, aiding in the overall function of the pulses. As shown in drawing 4 and note 6 of Fig. 3.2C, the equalizing pulse is one-half the width of the H sync pulse. If the equalizing pulses were made the same width as the H sync, the integrating capacitor would charge over a longer period of time during their influence in the circuit and cause possible premature firing of the V sweep generator in the receiver.

As already pointed out, it is very necessary to maintain the H sweep oscillator in perfect sync during this V blanking, otherwise the H sweep would be out of sync after each field. It is recalled that the receiver H sweep oscillator is driven from a *differentiating circuit* which accepts the higher line frequencies (15,750 cps) and above. Therefore, in order that the H sweep circuits be driven during the low frequency (60 cps) vertical blanking and sync time, the V sync and equalizing pulses are twice the line frequency as described. The action of the receiver during this time is illustrated in Fig. 3.2E. In drawing A the action of the differentiating circuit upon the usual H sync pulses may be observed, which shows that the leading edge of each pulse triggers a discharge through the succeeding stage to drive the H sweep generator and cause the H retrace of the scanning beam. Drawing B shows how the H sync is maintained during vertical blanking by the arrangement of vertical pulses which are constructed upon the 60 cps V blanking signal.

At this time the reader may wonder why the 31,500 cps frequency of equalizing and V sync pulses does not "sync" the horizontal sweep oscillator at this same frequency. The answer is that the

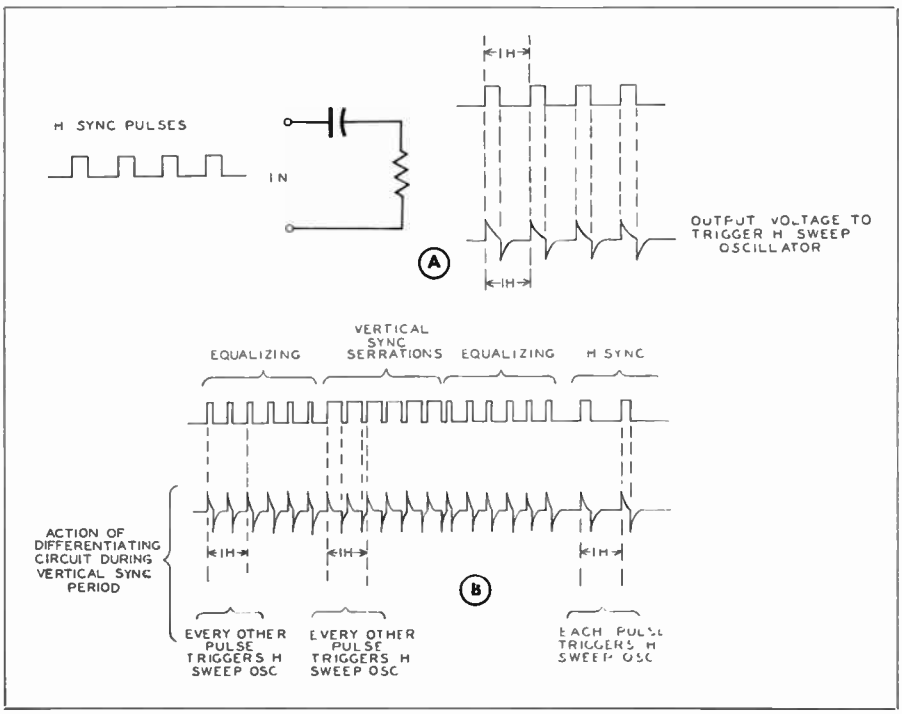

Figure 3.2E.

receiver H sweep oscillator is essentially a "free-running" type, and in order to "lock in" the circuit it is necessary for the "lock in" voltage to be very close to the same frequency. Thus if this free-running oscillator is adjusted close to 15,750 cps, frequencies of double this rate have no effect upon its operation, whereas frequencies of 15,750 cps will lock the oscillator in with 15,750 cps. In this way *every other* pulse of those constructed upon the V blanking pedestal will affect the firing of the oscillator, thus maintaining lock-in at the horizontal line frequency.

Lest the reader become confused at this point in trying to correlate receiver action with studio camera action, it is well to point out why the complex transmitted waveform is not necessary at the studio equipment end. In fact, the sync pulses are not inserted into the video waveform until some point after the final switching point at the studio, otherwise switching from one signal source to another could cause momentary loss of synchronization. The answer is that all receiver sync control pulses must be transmitted over a single channel, which constitutes the band

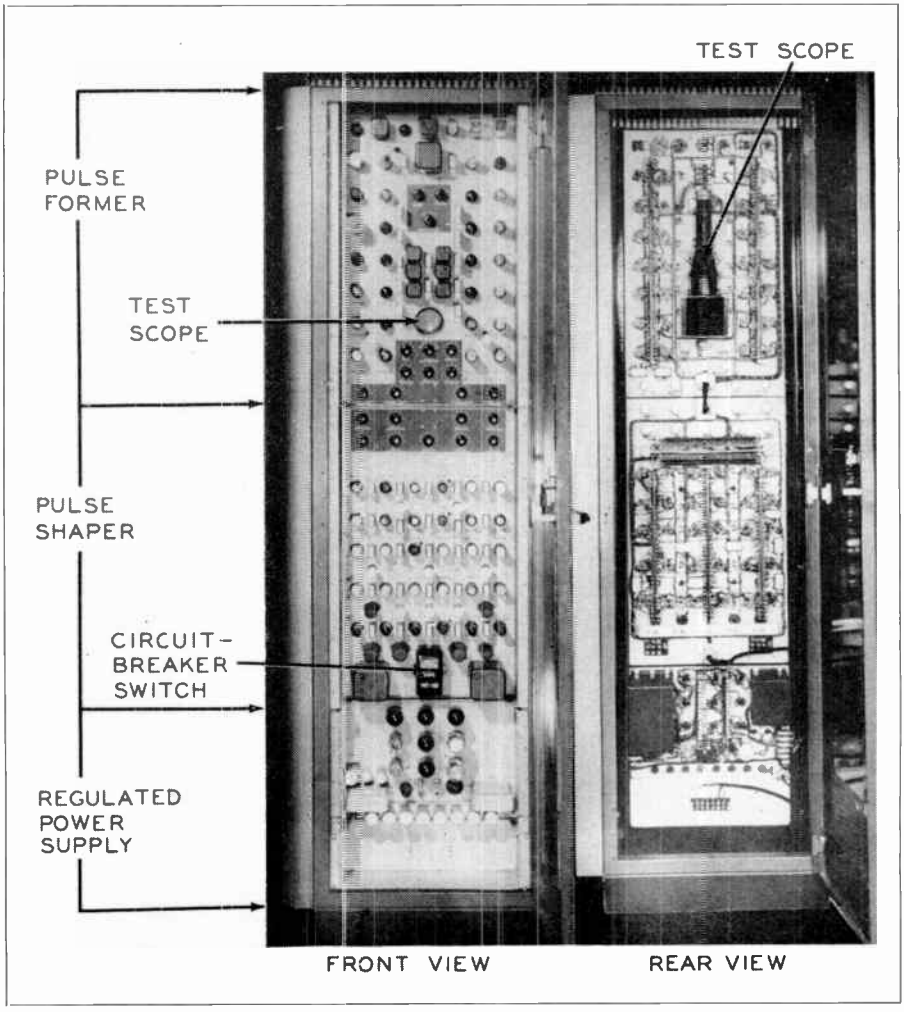

Figure 3.3A. Front and rear views RCA type TG-1A Synchronizing Generator. Courtesy RCA.

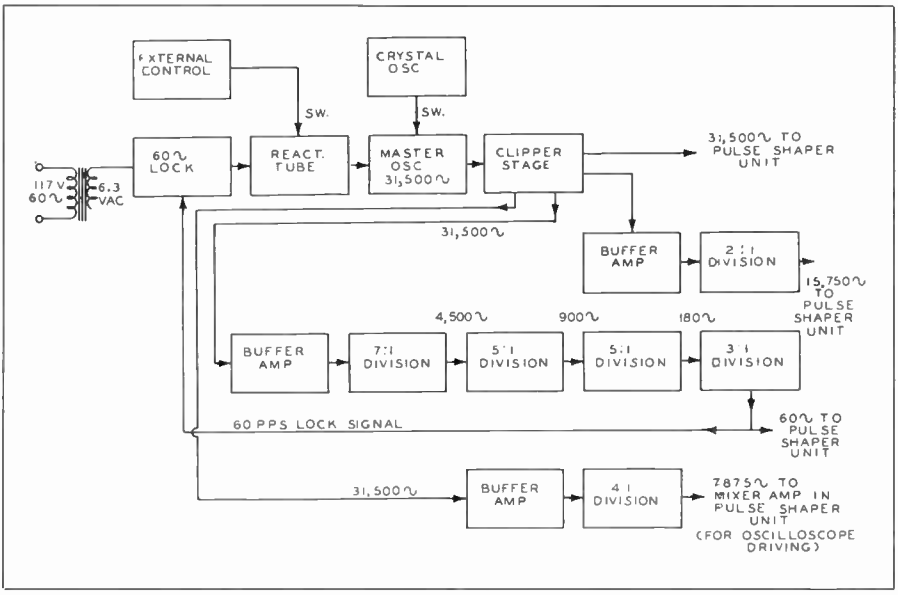

Figure 3.3B. Black Diagram of Pulse Farmer (timing) Unit in RCA Sync Generator.

allotted to any TV transmitter. Conditions are different at the studio. The cameras and control monitors are operated from the *driving pulses* (in synchronism with the transmitted sync pulses) from the sync generator. The H and V driving pulses are usually fed to the equipment completely independent of each other and over separate coaxial cable circuits. These driving pulses directly trigger the sawtooth scanning generators, and the only possible interlacing errors would be inherent errors in the driving signals themselves.

3.3 The Synchronizing Generator

Fig. 3.3A illustrates a typical commercial sync generator widely used in TV studios. This particular unit contains 60 tubes including the regulated power supply comprising the bottom section of the rack. The top section contains the pulse forming circuits and the center section comprises the pulse shaping circuits. The built-in oscilloscope is provided with a selector switch to check the step-down ratio of any of the frequency-dividing counter circuits.

The pulse-forming unit contains the master oscillator from which all the various timing pulses at the required frequencies are obtained. This master oscillator may be locked in either (1) from the local 60 cycle power line frequency, (2) with a crystal oscillator or (3) with any desired external source such as sync signals generated from a field pickup remote from the studio. In addition, it may operate as a free-running oscillator.

The pulse-shaping unit accepts the signals from the above section and shape them to the required waveform. These various signals are fed to ten output connectors on a subpanel at the base of this section. These coaxial outputs provide two connections for each signal, either positive or negative polarity as may be required for the associated equipment. When more than one signal chain is to be fed, isolation amplifiers are used to isolate the various circuits being driven. Flexible coaxial lines of 75 ohms, such as RG11/U or RG59/U, run from these output connectors to the camera control units, mixing amplifiers, etc. All AC power

input to the rack is controlled by a circuit-breaker switch at the bottom of the pulse-shaper unit (center section).

Fig. 3.3B is a block diagram of the pulse former unit for the sync generator of Fig. 3.3A. The master oscillator is essentially a free-running type with a reactance tube across the tank for automatic frequency control (AFC). The output is a sine wave. This 31,500 cps sine-wave is fed to a "limiter" or "clipper" amplifier, which squares off the tips of the sine-wave to achieve a rectangular waveform at the same frequency. The clipper has four output connections as follows: (1) direct line to furnish the 31,500 pps to the pulse-shaper unit, (2) excitation through a buffer amplifier to a 2:1 frequency divider which supplies the resulting 15,750 pulses per second to the pulse-shaper unit, (3) excitation through a buffer amplifier to the 7,5,5,3 frequency divider (section 1.10, Chapter 1), which supplies the 60 pps to the shaper unit from which a feedback loop is run to the 60 cycle lock circuit for the AFC voltage, and (4) excitation through a buffer amplifier to the frequency divider which delivers 7875 pps to be used in waveform monitoring at the studio positions.

The sync generator is usually operated so that it is timed, or locked in, with the power line frequency. Fig. 3.3C is a basic diagram showing the principles of a 60 cycle lock circuit for AFC of the sync generator. It may be seen that the arrangement is the usual AFC discriminator and reactance tube combination. A small voltage from the power line is fed between cathode center tap and the voltage-dividers R_1 and R_2 of the discriminator, through which the grid of the reactance tube receives its negative bias. An additional voltage is transformer coupled into the cathode circuit of the discriminator as shown. This voltage is a component from the final count-down circuit of the 7,5,5,3 chain which is a 60 cps pulse derived initially from the master oscillator itself. The manner in which these two 60 cps voltages are coupled into the discriminator results in a phase relationship between them of 90 degrees. When this is exactly true, the rectified output in the balanced network of R_1 and R_2 will be equal in absolute values but opposite in polarity, resulting in zero output for these two reference voltages. At this time the reactance tube bias will be at its normal control voltage. Since any change in frequency of the 60 cps voltage from the count-down circuits will affect the normal 90 degree phase relationship with the line voltage frequency, the output voltage of the discriminator will be of a magnitude dependent upon the amount of frequency

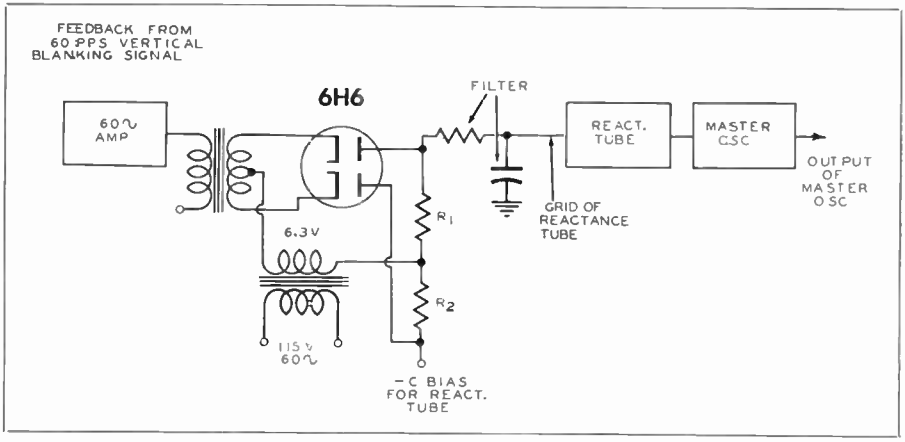

Figure 3.3C. Basic diagram of a 60 ~ lock circuit as used in synchronizing generators.

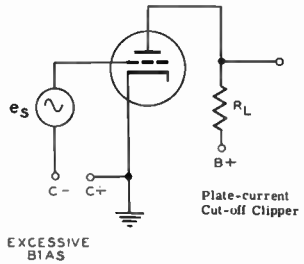

Plate-current Cut-off Clipper

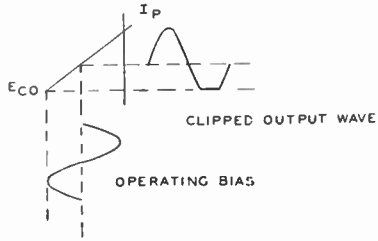

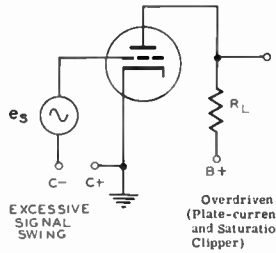

Overdriven Stage. (Plate-current Cut-off and Saturation Clipper)

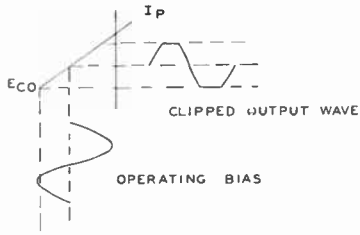

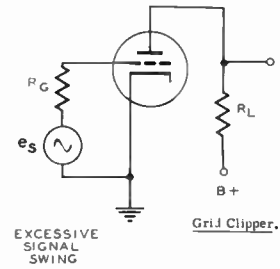

Grid Clipper.

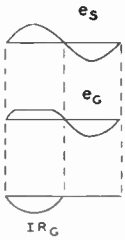

Uses series Rg and overdriven grid. Large positive excursion of signal voltage e causes large Ig to flow with resulting IR drop across Rg cancelling positive swing of voltage.

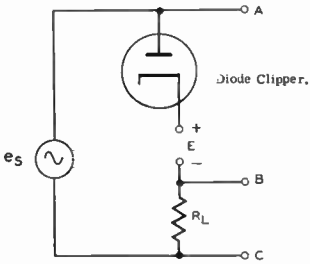

Diode Clipper.

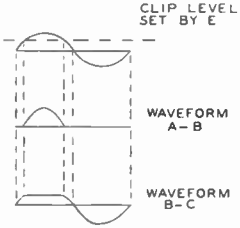

When signal e_s is zero, diode plate is negative with respect to cathode, therefore does not conduct. When e_s exceeds the DC supply voltage E, plate becomes positive with respect to cathode and diode conducts. Adjusting E adjusts clip level. Diagram shows how either polarity of output may be obtained by choice of output taps.

Figure 3.3C. (1) Fundamental clipper circuits.

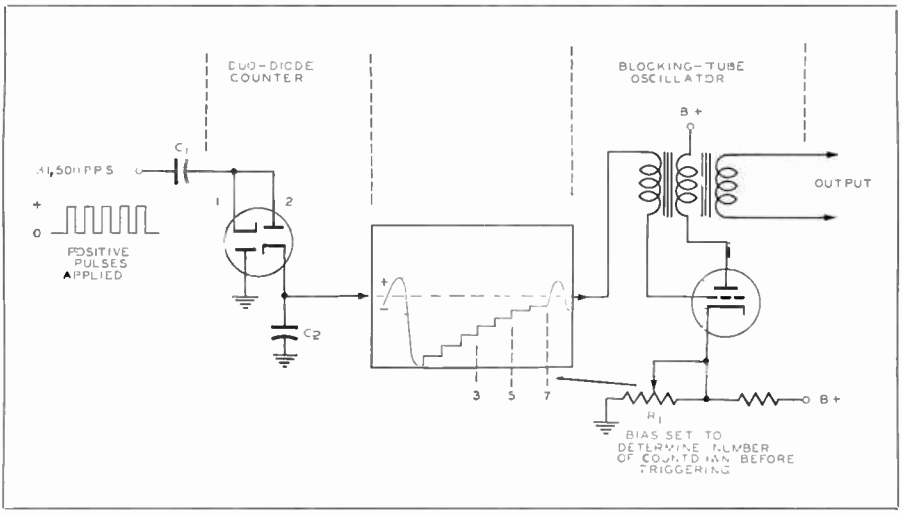

Figure 3.3D. Fundamentals of Duo-Diode Counter Circuit and Blocking Oscillator.

difference, and negative or positive depending upon the direction of deviation in frequency. This, then, either adds or detracts from the normal bias on the reactance tube, correcting the frequency of the master oscillator. The connection from the discriminator to the grid of the reactance tube is filtered as shown to allow only pure DC voltages to be applied to the AFC action.

Clipping circuits vary in methods and application. Such circuits may be used to square off extremities of a sinusoidal wave, or may have pulsed waveforms applied in which case the clipper removes either positive or negative tips of the waveform. Any of the usual methods are found in commercial equipment; series or parallel diode clipping, class C amplifier, plate saturation, or grid clipping. For convenience, fundamental clipper circuits are reviewed in Fig. 3.3C (1).

Early forms of frequency divider circuits utilized the principle of locking in a multivibrator type of circuit to one of its natural sub-multiple frequencies. This method has been largely replaced in modern sync generator circuits by triggering a blocking oscillator with a duo-diode counter circuit, achieving maximum stability. This is illustrated in Fig. 3.3D. This shows a basic circuit used to trigger a blocking oscillator by such a counter circuit, as described in the following paragraphs.

Following the diagram of Fig. 3.3D, it is seen that positive pulses from the clipper and buffer amplifiers are applied to the input terminals of the counter circuit at the master oscillator frequency of 31,500 pps. Capacitor C_2 is of much larger capacitance than C_1. When a positive leading edge of the input pulse is applied, the plate of section 2 is driven positive and this section of the tube conducts, charging capacitor C_2. This capacitor charges to only a small fraction of the applied voltage, since its value is quite large in ratio to C_1. When the trailing edge of the input pulse arrives corresponding to a sudden negative excursion, C_1 discharges through the number 1 section of the duo-diode, since the cathode is driven negative with respect to the plate. C_2 however must retain its small charge since it cannot discharge through its section of the tube due to the resulting negative charge upon its plate. Upon the next leading edge of a pulse (positive excursion) the same cycle of charging of C_2 takes place, and upon

the trailing edge the same cycle of discharging of C_1 recurs. In this manner the voltage across C_2 is built up in steps with a definite increase in charge for each leading edge of an applied pulse. The step-up of charge decreases exponentially as the stored voltage approaches the amplitude of the applied pulse due to the exponential charging rate of a capacitor. Thus it is noted in the drawing that the last few steps are small in increase value. When the positive voltage across C_2 is at a certain value, the bias on the blocking tube oscillator which has held the tube below cutoff is now overcome, and conduction begins, producing a pulse of plate current. The feedback transformer then produces a corresponding positive pulse in the grid circuit. When this occurs, C_2 is discharged through the oscillator cathode-grid circuit, and is ready to start counting all over again. The amount to which C_2 must be charged before this trigger action occurs is determined by the bias across the cathode circuit of the blocking oscillator from the B plus supply. Thus, if this bias is adjusted to obtain triggering upon the count of 7, the 31,500 pps input is divided to 4500 pps.

Actual commercial circuits use isolation or buffer amplifiers after the blocking oscillator as shown in Fig. 3.3E. This arrangement eliminates the need for the tertiary winding on the feedback transformer. It should be noted that the counting capacitor C_2 is actually two capacitors as shown, so that the associated test oscilloscope may be conveniently driven from that point. This figure illustrates the chain of 7,5,5,3 frequency dividers to obtain the 60 pps for the pulse-shaping unit, with related waveforms appearing on the test oscilloscope associated with the sync generator. By this means the operator may count the number of steps of charge for the counting capacitor, and ascertain the accuracy of frequency division in each stage.

The pulse-forming unit, then, derives all the necessary frequencies needed in synchronization from the one master oscillator, and delivers them to the pulse-shaper unit. The pulse-former may be thought of as the initial pulse generator and timer for the pulse-shaper.

A block diagram of the pulse-shaper unit is presented in Fig. 3.3F. Note first the outputs of the line amplifiers (symbol LA in diagram). Line amplifier No. 1 contains the video blanking. It is recalled that both horizontal and vertical blanking must be used, hence this amplifier actually presents the output of a composite wave representing both H and V blanking pulses. LA No. 2 gives the composite oscilloscope sync signals, both the field test of 30 cps and the line test of 7875 cps. LA No. 3

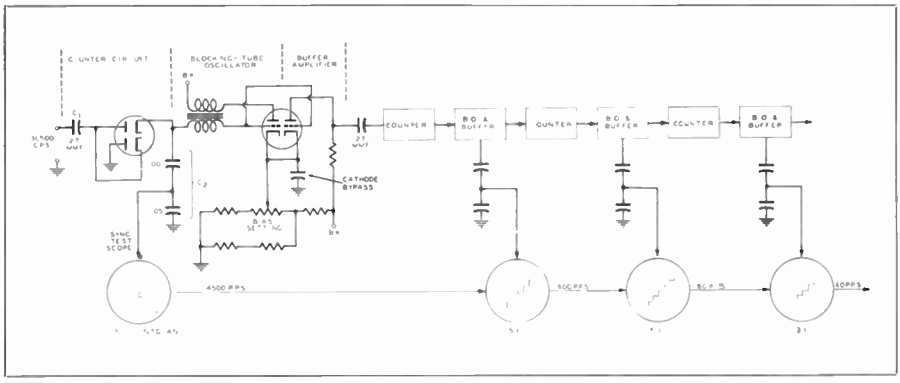

Figure 3.3E. Elementary arrangement of 7, 5, 5, 3, frequency divider to obtain 60 pps from the master oscillator frequency of 31,500 cps.

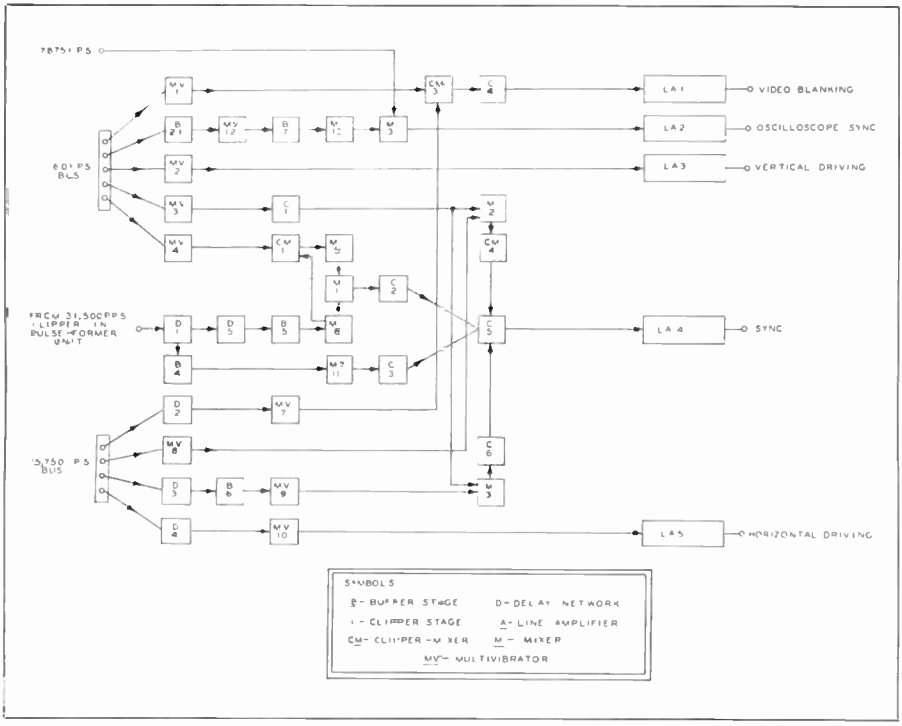

Figure 3.3F. Black diagram pulse shaper unit (after RCA data).

contains only one signal; the Vertical driving pulses for the camera chain at the studio. LA No. 5 also is a single pulse amplifier; the *horizontal* pulse rate for driving the camera chain. LA No. 4 presents the sync pulses, actually a composite signal of both H and V pulses; the V sync in themselves comprising a complex wave of equalizing pulses and serrated sync pulses.

The action of this unit will now be broken down into segments so that the over-all function will be illustrated. First, it is necessary to realize that the various multi-vibrator oscillators (designated MV in diagram) operate continuously as timed by the pulse-former unit. Thus, when it is necessary to deliver, for example, the six serrated V sync pulses to the composite signal, a "pulse-keying" circuit is used to allow this MV to pass exactly six such pulses, then to "block" the continuing pulses for the required amount of time. Observe Fig. 3.3G, drawing A. This shows the basic action of a "keying-in" circuit. The screen of the pentode tube is operated with no voltage, and circuit constants are such that the tube is normally non-conducting. Thus, although the V sync pulses may be continuously applied to the grid, no corresponding signal voltage appears at the plate output. However, a "keying signal" of 3H duration and of positive polarity applied to the screen will cause the tube to conduct during this time interval. Thus six V sync pulses of inverted polarity appear at the plate output. Drawing B illustrates a commercial type of keying-in circuit. In this case, the keying signal must be of negative polarity so that the amplified pulse applied to the screen of the pentode tube is a positive pulse, causing conduction during this time interval.

In some instances it is necessary to utilize a keying-out circuit. One such

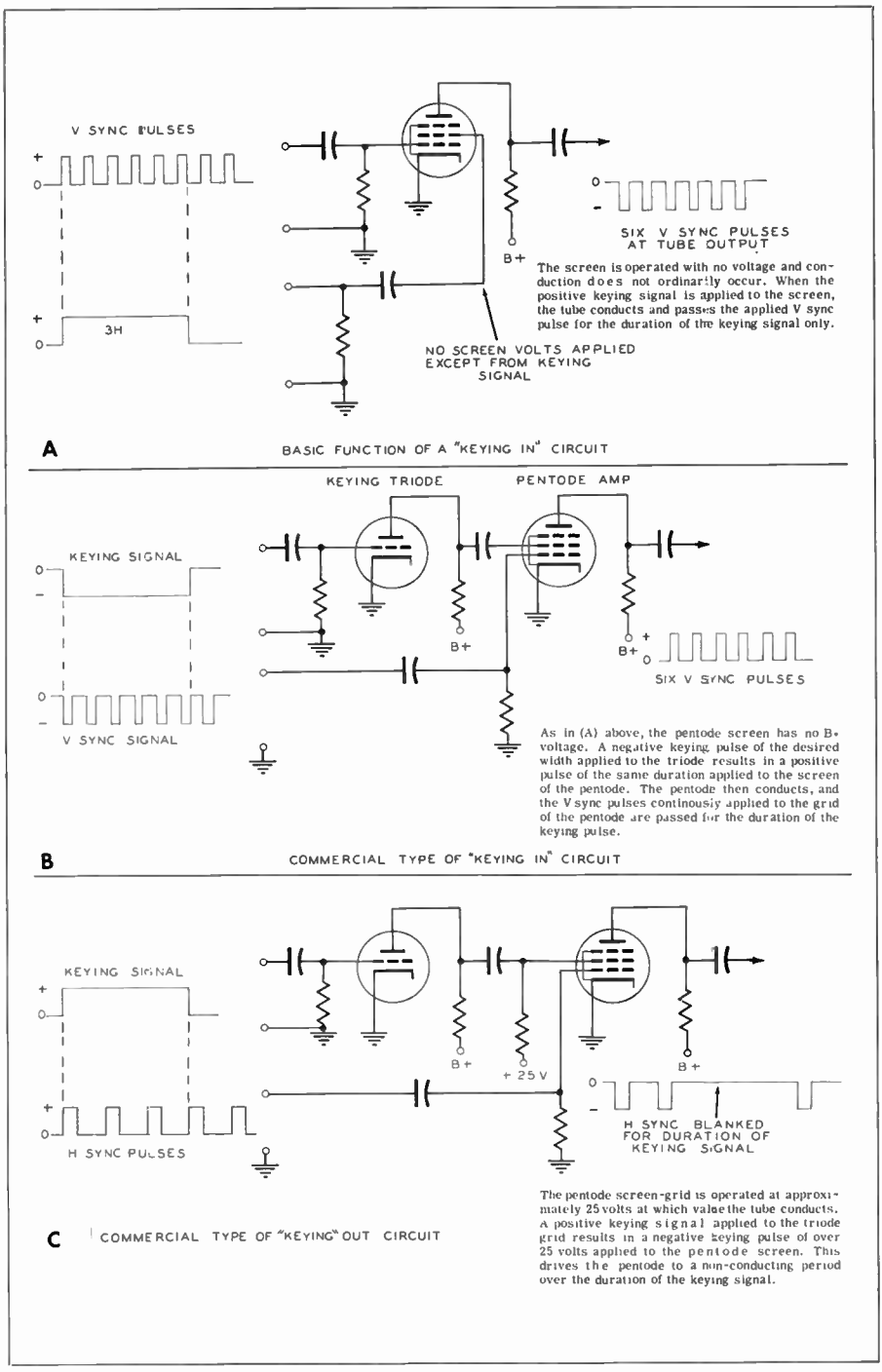

Figure 3.3G. (A) Basic function of a "Keying In" circuit. (B) Commercial type of "Keying In" circuit. (C) Commercial type of "Keying Out" circuit.

application is in eliminating the 15,750 pps H sync pulses during the V sync interval every sixtieth of a second. A commercial type of keying-out circuit is shown in drawing C of Fig. 3.3G. Here it is observed that the screen of the pentode is operated with a low screen voltage of about 25 volts. The continuously applied H sync pulses at the grid circuit are passed during the time the screen voltage is plus 25 volts. When the positive 60 pps keying signal is applied at the grid of the triode, a negative pulse of over 25 volts is applied to the screen of the pentode, cutting off conduction during this interval. Thus the H pulses are keyed-out 60 times per second for the required time as determined by the duration of the keying signal. Keying circuits are sometimes termed "gate circuits."

The leading edges of the equalizing pulses which are derived directly from the 31,500 cps master oscillator, are used as the timing source for the various multivibrators. Since some pulses must be delayed in time from other pulses, special *delay circuits* are used for the purpose. Such a circuit sometimes takes the form of an artificial transmission line terminated in its characteristic impedance as shown in Fig. 3.3H. The amount of delay is relative to the number of sections containing lumped inductances and capacitances. For example the pedestal (blanking) signals must start ahead of the sync signals to assure that the kinescope tube is blanked before start of the retrace. Thus the sync signals are delayed in respect to the pedestal signals.

Referring back to the block diagram of Fig. 3.3F, it is noted that the simplest chain is that feeding the line amplifier LA 3 which supplies the vertical driving pulses for the camera chain at the studio. This chain consists of a single multivibrator circuit triggered from the 60 cps bus which receives the final count-down from the 7,5,5,3 counters from the 31,500 cps master oscillator. This is a conventional multivibrator circuit (see section 2.3, Chapter 2), supplying the vertical driving pulses. The width of this pulse is determined by the value of grid resistance in the MV circuit, which is fixed at an exact amount to properly proportion the V driving pulse. The output of LA 3 provides 60 pps driving pulses for the cameras, of either positive or negative polarity as required by the associated equipment. The horizontal driving signal is similarly derived from the 15,750 pps bus; the multivibrator MV 10 being triggered through the delay network D4. MV 10 properly adjusts the width of the H driving pulses. It should be mentioned at this time that all of the line amplifiers act as limiters. This is to assure flat tops on all pulse waveforms.

We may now investigate the chains in the pulse-shaper unit which controls the waveforms needed for transmission on the radio-frequency carrier wave output of the transmitter (Fig. 3.2C). The video blanking signal from line amplifier LA 1 is actually a composite signal of both 60 cps V blanking and 15,750 cps H blanking. The 60 cycle pulses are formed by MV1, triggered by pulses from the 60 cycle bus. The 15,750 cycle pulses are formed by MV7 through the delay network D2. Both signals are mixed into the clipper-mixer CM3. The basic action of this circuit is illustrated in Fig. 3.3I. The two signals are combined in the common load resistor R_L. The H pulses (15,750 cps) which happen to occur during the V (60 cps) pulses stand up on top of the V pulses as if on a pedestal. This is partially removed in the clipper section of this stage. Complete removal takes place in the following stage, Clipper C4. This is shown in Fig. 3.3J. Thus the

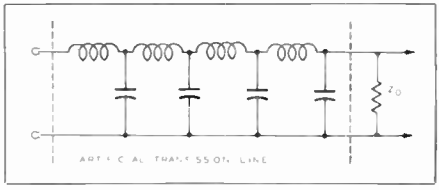

Figure 3.3H. One type of delay circuit as used in synchronizing generators.

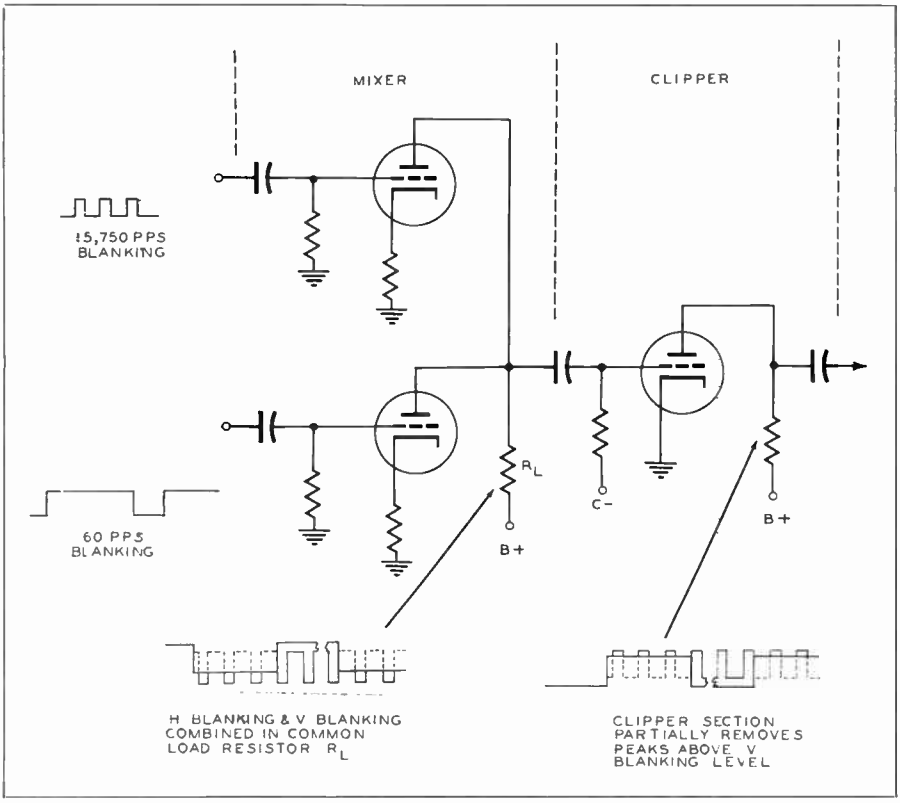

Figure 3.3.. Basic action of clipper-mixer stage for video blanking.

composite H and V video blanking signal is furnished to the line amplifier. These pulses are much broader than the H and V sync pulses so that the receiver kinescope is adequately blanked before retrace starts.

The synchronizing signal at line amplifier LA4 is the culmination of the most complex chain of functions in the entire sync generator. The final RTMA sync signal is shown in curve (I) of Fig. 3.3K. Refer again to the block diagram of Fig. 3.3F during this discussion. The V sync pulse (curve g) as discussed earlier, consists of six flat-topped pulses of 31,500 cps repeated (as a group) sixty times a second. These pulses by themselves (curve e) are provided by multivibrator MV6 driven by a pulse from buffer B5. The leading edges of the keying-in pulse waveform (curve f) is precisely controlled so that it will fall between the pulses of wave (e) which is the original V sync pulse. In order to insure this function, the keying pulse, curve (b) obtained from MV4 is fed to CM1 which also receives the original V sync pulse (curve e) from MV6. The circuit of CM1 is so arranged that the following MV5 will be triggered by the first (e) wave that follows the trailing edge of the (b) wave. Therefore the leading edge of the "keyed-in" vertical sync pulse (curve g) will occur slightly after the leading edge of the keying-in pulse (curve f).

The horizontal sync pulse (curve d) is formed by combining in limiter-mixer M3 the 60 cycle pulses from MV3 with

the 15,750 cycle pulses from MV9, after which the combined signal is clipped in clipper C6. In this way the H sync pulses are keyed out 60 times per second during the V sync period. The equalizing pulses (curve a) are formed by MV 11. The keying-out pulse shown in curve (c) serves to depress every other pulse of equalizing wave, except during the V sync interval, and are removed by the sync clipper C5. This keying out pulse is formed by combining in mixer M2 the 60 cycle pulses from MV3 with the 15,750 cycle pulses from MV8, and clipping the combined wave in CM4. Curves a-c-d-g when combined appear as in curve h. This signal is then fed to the two-stage sync clipper C5 where the pulse forms above and below the dotted lines are removed. The final RTMA sync waveform (curve I) results.

The oscilloscope driving signals for waveform monitoring is a composite signal of 30 and 7875 cycle pulses. The 30 cycle pulses for field waveform monitoring are provided by MV 13 driven from the 60 cycle bus through buffer B21 and MV 12. The 7875 cycle pulses for line waveform monitoring are from the frequency-divider circuit in the previous pulse-former unit. The signals are combined in mixer M3, and fed to the line amplifier LA2.

It is noted that the oscillators used in the pulse-former (timer) unit were of the blocking tube type, whereas those in the shaper unit just discussed were of the multivibrator type. It is now general practice to use the blocking tube oscillator for frequency ratios greater than 2:1, and the multivibrator for 2:1 ratios. Since the timer unit must employ frequency divisions as great as 7:1, the blocking oscillator is used in conjunction with a counter tube circuit.

It is possible at this point to investigate the basics of how the various pulses are shaped in exact accordance with RTMA standards adopted by the industry. Notation should be made at this time that the actual form of the transmitted composite signal is not made at the output of the sync generator; i.e., the sync pulses, for example, are not placed upon the blanking pedestals but simply are available separately as shown in the block diagram. The final formation therefore is made at the point in the transmission system where the sync and blanking is mixed with the video signal. This takes place at some point *after* the final switching

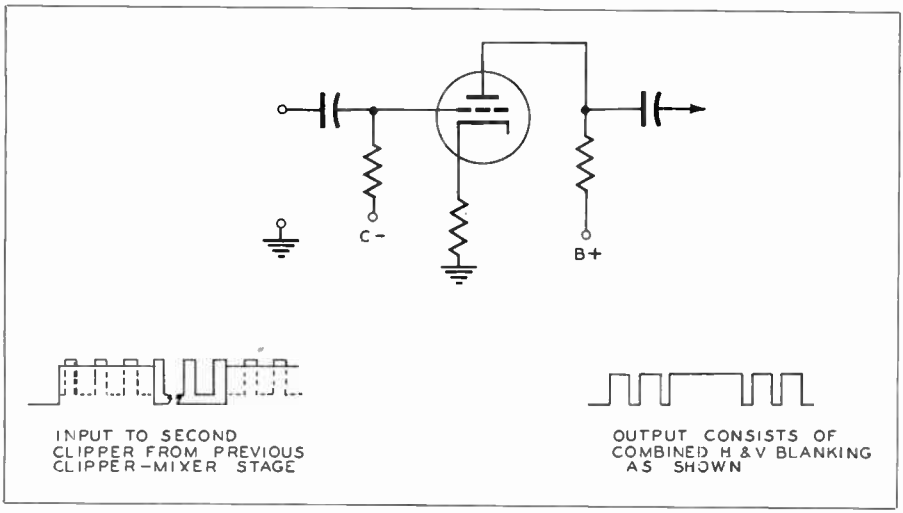

Figure 3.3J. Basic action of second clipper stage. The output is the composite blanking signal.

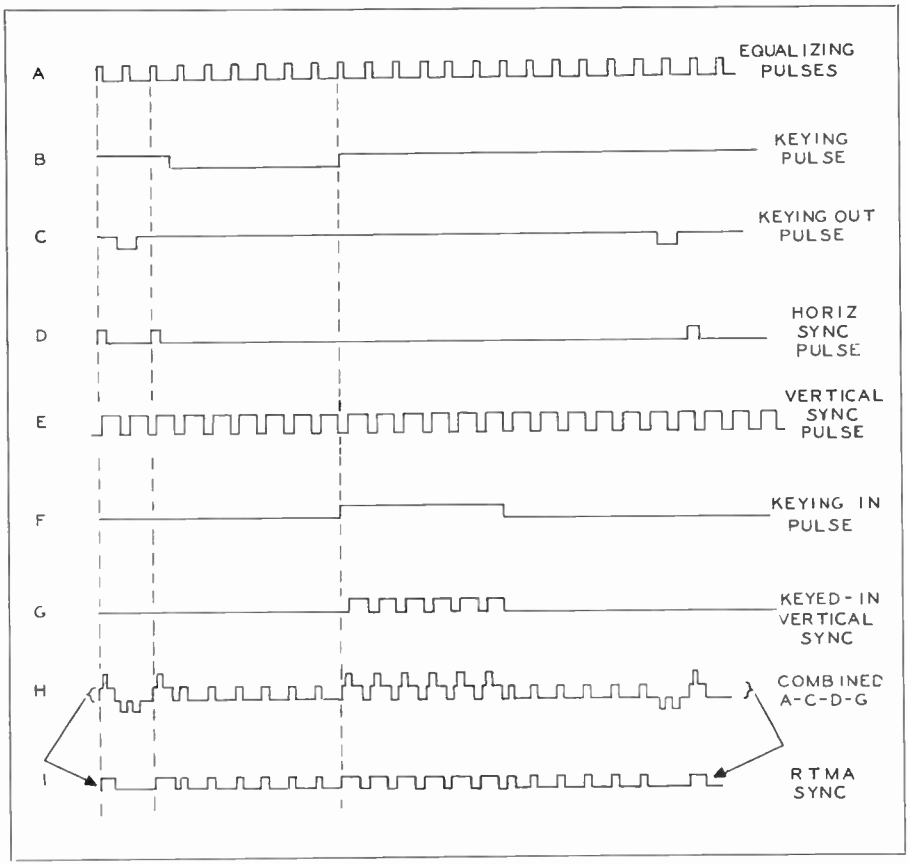

Figure 3.3K. How the RTMA sync waveform is formed in the Pulse-Shaper unit.

of video sources takes place, since, if sync were inserted before the switching point, momentary loss of sync signals could occur. The mixing of the sync generator signals with the video signal is discussed later in this chapter.

Fig. 3.3L shows the basic action of an equalizing pulse multivibrator. This circuit (drawing A) is triggered from squared pulses derived from the 31,500 cps sine wave oscillator and clipped to form the square wave for triggering. The grid resistor adjusts the time over which the oscillator is active for each trigger pulse, hence determines the width of the output pulses (drawing B).

To meet the requirements of waveforms, square and rectangular shaped pulses must not only be of exact required width, but must also have steep leading and trailing edges and flat tops. The fundamentals of controlling these characteristics are illustrated in Fig. 3.3M. Drawing (A) shows a differentiating circuit with square wave pulses applied. When the relationship of the time of the square wave (T) is approximately equal to the time constant RC, the output of the waveform voltage across the resistance is shown immediately to the right. When T is much less than RC, as ¼ of the time constant, or less, the output voltage is more nearly equal to the applied waveform as shown immediately below. When T is much greater than RC, as 4 time constants, or more, the waveform

becomes that shown at the bottom drawing. In circuits used, for example, to narrow an applied pulse, a relatively small capacity and low resistance (making T greater than RC) serves to attenuate the low frequencies and easily pass the highs. Thus the condition of T being much greater than RC results in the waveform shown at the bottom of drawing (A). The pulse is initially narrowed here, but is not of the required waveform. Drawing (B) illustrates how the differentiated wave is clipped and squared to produce the final waveform shown. The class B amplifier clips and squares the wave, the resulting narrowed wave being reinverted in a class A amplifier. The more the value of C in the differentiator is reduced, the greater the narrowing of the wave as applied to the class B stage. This stage, aside from being biased to cut-off, operates at low plate voltage (or is over-driven), hence squaring off the applied peaks due to the overdriven condition of the plate current.

In production of various components of signal and keying waves in the sync generator, it is sometimes convenient to use a "delaying" circuit for an ap-

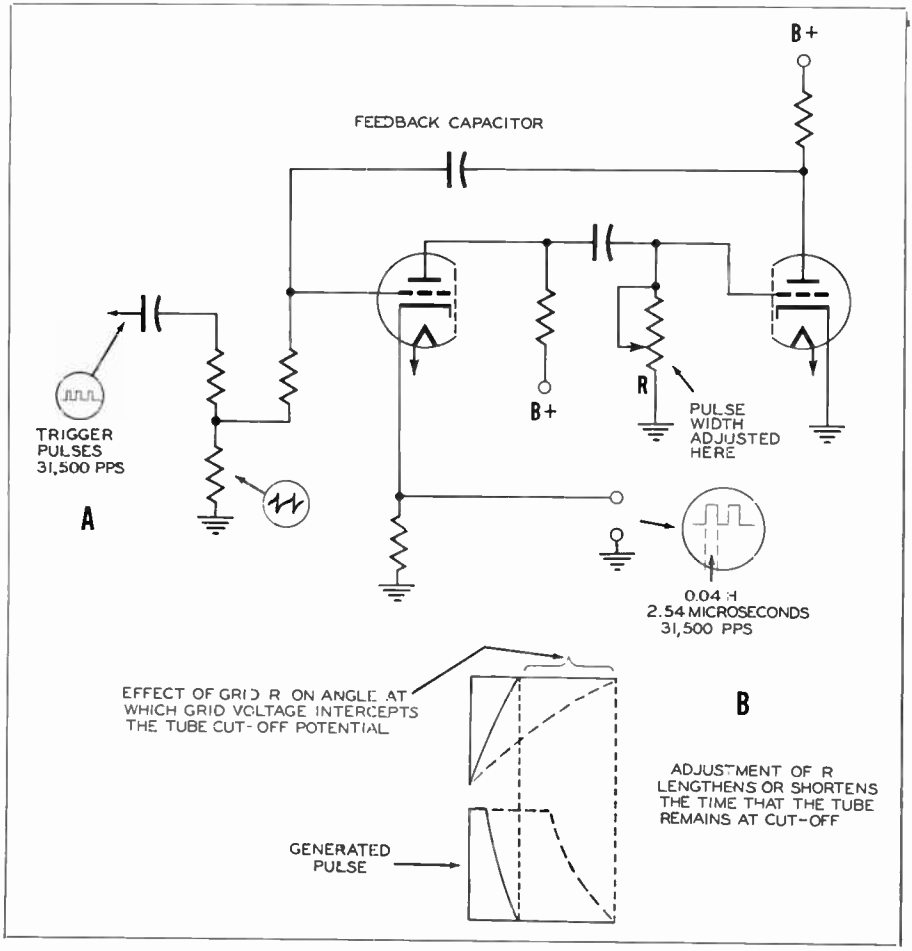

Figure 3.3L. Basic equalizing pulse multivibrator circuit. The MV is triggered from a rectangular wave derived and clipped from the 31,500 cps master oscillator. This MV does not divide the frequency, but adjusts the width of the pulse to correspond to the RTMA standard.

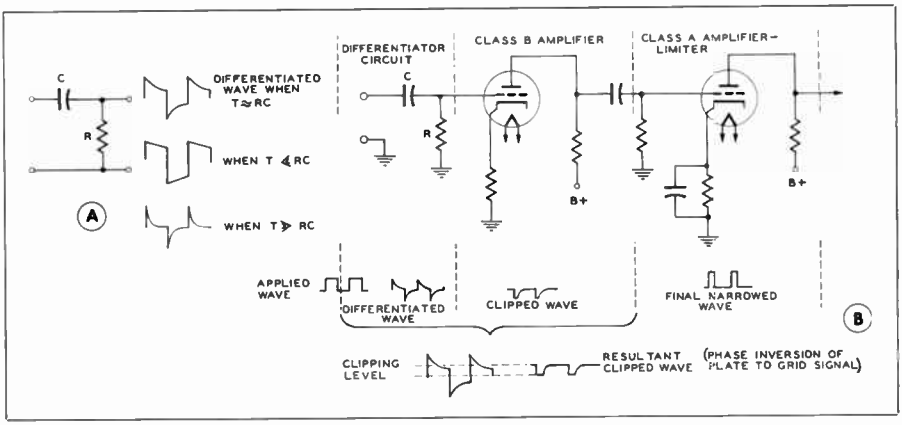

Figure 3.3M.

plied pulse. Where a slight delay in the order of several microseconds is required, the circuits of Fig. 3.3N may be used. The first step is in passing the applied pulse through an integrating circuit. Since this is a series R and shunt C arrangement, such a circuit discriminates against the high frequency components of an applied signal. This is to say that the leading and trailing edges of a square wave, since they correspond to the high frequency component of the pulse, will become sloped as shown. The resulting wave-

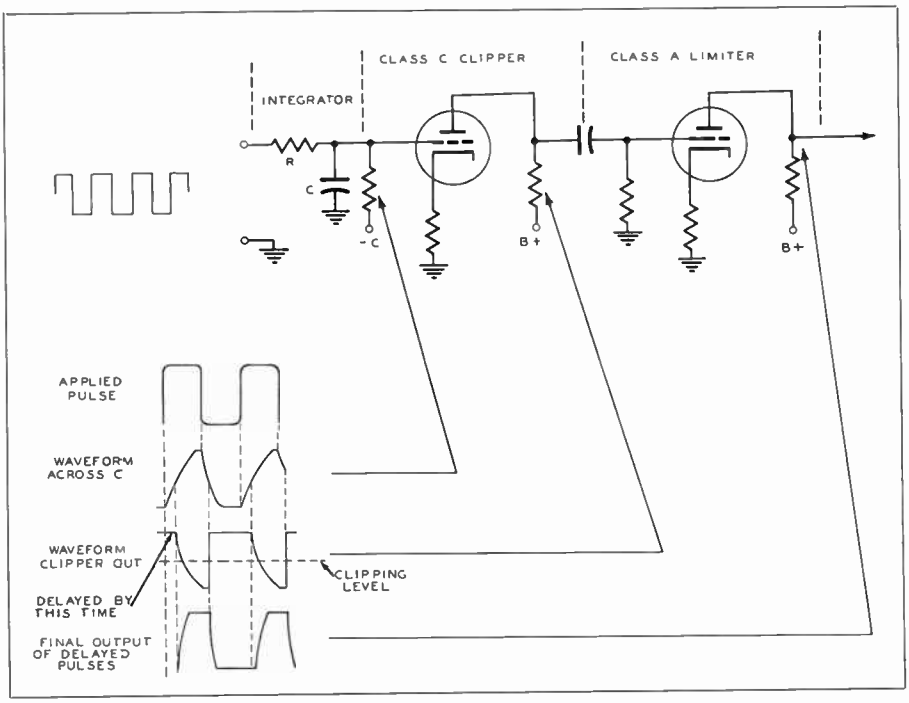

Figure 3.3N.

form across C is then applied to a class C amplifier which delays the initial rise of the pulse by an amount depending upon the actual amount of bias below cutoff. The pulse is then reinverted in polarity in the following class A amplifier, which also acts as a limiter or clipper to assure a flat top on the output pulse. These actions are shown in the figure.

The outputs of the sync generator are usually fed to a distribution amplifier, sometimes referred to as a pulse distribution unit. This unit contains a number of separate isolation amplifiers so that more than one channel may be fed without interaction on any other channel. As an example it may be necessary to feed the driving signals to a number of studio cameras. If isolation amplifiers for the separate cameras were not used, a disturbance such as a short circuit on any one camera would cause a disturbance or complete loss of driving signals to all other cameras. Thus the distribution amplifier unit provides a high degree of isolation between lines or between any line and the source.

Further technical details of the synchronizing generator are included in sections 6.9 and 8.6.

3.4 *The Camera Control Unit*

Each camera used in the studio is connected directly to an individual Camera Control Unit in the control room. This unit enables the *video operator* to control and monitor the quality of the picture being televised by the camera.

Fig. 3.4A illustrates the monitor and control panel of one type of commercial camera control unit. The camera monitor reproduces the picture output of the camera on a 10-inch Kinescope. The lower monitor is a 5-inch oscilloscope which displays oscillograms of the video signal waveform. By observing the picture, the video operator is enabled to keep the camera in proper electrical focus, and maintain any desired level of brightness in the picture. Constant brightness level is maintained by keeping the oscillogram as displayed on the 'scope at a definite amplitude. The control chassis in the lower compartment of the unit console contains the intermediate video amplifier driven by the signal from the preamp in the pickup

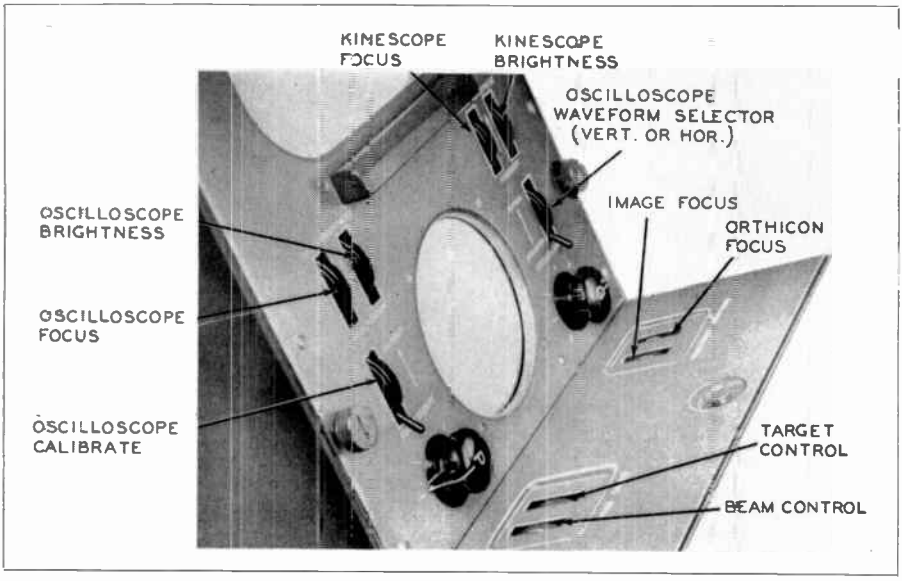

Figure 3.4A. RCA camera control unit. Details of control panel.

head, and circuits for mixing in picture blanking signals supplied by the sync generator. When only one camera is used, the sync pulses may also be introduced in this unit. As a rule, more than one camera source is used, requiring switching. In this case, the sync pulses are introduced at some point after the switcher. Electrical connections to the camera control unit are made through plug-in connectors for the coaxial lines. In the unit illustrated, five multi-pin connectors on the amplifier chassis provide connections for: (1) power input from regulated power supply, (2) video signal from the camera preamp, (3) input to the camera monitor, (4) blanking and driving pulses from the sync generator, and (5) video signal output.

Four controls for the image orthicon pickup head are located on the inclined desk top as illustrated in Fig. 3.4A. These controls are:

1. *Beam current.* Adjusts Grid No. 1 voltage of image orthicon tube in pickup head. This voltage is variable between —5 and —85 volts, and determines amount of beam current.
2. *Target voltage.* Adjusts image orthicon target voltage within a few volts plus or minus of ground potential.
3. *Image Focus.* Termed *Photocathode Focus* on some makes of camera control units. Adjusts photocathode voltage between —250 and —440 volts.
4. *Orthicon Focus.* Termed *Beam Focus* on some makes of camera control units. Adjusts potential of Grid No. 4 (wall coating) of the image orthicon, and mostly affects the electron beam focus at the target of the tube. This potential varies between 150 and 230 volts, the actual value being determined by the focus coil current used.

The functions of the above mentioned current and voltage values were detailed in sections 2.2 and 2.3 of Chapter 2.

The controls for the monitor picture tube and oscilloscope are located on the inclined panel above the surface of the desk. Knobs at the bottom marked G and P adjust the video output gain (G knob) and blanking (pedestal) amplitude (P knob). The waveform oscilloscope controls are located at the left. Upper left controls adjust focus and brightness, lower left control being used to calibrate the 'scope. Upper right controls are for the picture kinescope focus and brightness. The control at right center when placed in the "up" position allows waveform monitoring at the field frequency on the oscilloscope. When placed in the down position, the 'scope monitors the line waveform.

It is pertinent at this time to discover exactly what the purpose of this waveform oscilloscope is, and how it functions in practical application. To monitor the *line waveform*, it is recalled that a 7875 cycle (one-half line frequency) sweep from the sync generator is supplied to the 'scope deflection circuits. Since this sweep frequency is ½ the line frequency two video lines (separated by the H blanking pulse) will be displayed on the screen of the scope. When it is desired to observe the *field waveform*, a suitable 30 cycle sweep is applied. Thus two fields (separated by the V blanking pulse) will be displayed on the screen. The purpose of this is to make visible the relative amplitudes and waveforms of the video signal and blanking-sync pulses. This also permits proper video and blanking (pedestal) gain adjustments to be made so that an overall amplitude corresponding to 100% modulation of the video transmitter may be maintained. This is the video level indication analogous to the VU meter in audio transmission. Relative TV video levels are fully discussed in section 3.5 to follow.

The oscilloscope "calibrate" control mentioned above is used to determine the amplitude of the waveform as shown on the waveform monitor screen. When the control is thrown to the "calibrate" position, a pulse of some definite predetermined value, such as 1.4 volts,

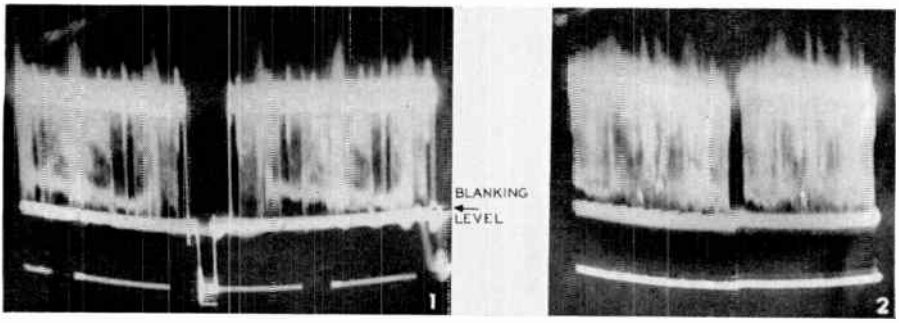

Figure 3.4B. (1) Horizontal (line) waveform as shown on the waveform monitor using a sweep of 7875 cps. The sync is shown inserted here, although not always inserted until after the camera control unit monitoring point. The polarity is black negative, standard for output of camera control units. Note: When sync is not inserted here, the line waveform observed in the scope is identical, without the patterns shown below the blanking level. (2) Vertical (field) waveform observed in the scope with a sweep of 30 cps.

is displayed on the screen which may be marked with lines for references. The pulse is taken from the regulated power supply so that when once adjusted to the reference voltage, remains of steady-state value. The gain of the signal (waveform) may then be adjusted to this reference value by the camera control operator.

Fig. 3.4B shows two photographs of typical patterns displayed on a camera control waveform 'scope. In (1) appears the *line waveform* position (7875 sawtooth sweep) displaying two video lines and the H blanking and sync pulse which occurs between each successive line. It is noted that the picture at this point is black negative polarity. *The reader should remember that the sync pulse is inserted here only when one camera is used with no subsequent switching between picture sources.* Sync is shown added here for completeness of discussion. When more than one camera is used, with subsequent switching, the same type of pattern appears *minus the sync pulse shown.*

The video picture waveform needs some explanation, since, contrary to what is expected by the newcomer, it does not display a single line of varying amplitude as has been represented in our drawings of a single video line. The actual display of only two picture lines would be impossible *unless* the camera were continually scanning only two lines over and over. Actually, the scope must be considered as *scanning the video signal*, and, although during any single sweep of the scope beam two horizontal lines will have been scanned in the camera and traced out on the waveform screen, *all the lines of the picture* are present at the video input terminals to the scope. The effect of persistence of the fluorescent screen and of the human eye, as well as the fact that all the lines of the picture are traced out on top of each other during a single sweep of the scope beam, lends pattern as shown in the figure.

The heavy line appearing at the blanking level is also in need of explanation. It should be remembered that at the end of each field (262.5 lines) the vertical retrace takes place and the V blanking pulse is present to blank out the kinescope beam during this time. Since the waveform monitoring scope beam is *not* blanked during this time, and is still sweeping the screen, the vertical pedestal voltage is traced out in the horizontal direction as shown. It is a relatively heavy line because the V pedestal is some 13 to 21 horizontal lines in duration (per field) thus is swept over a wide portion of the screen. The long interrupted lines at the sync tip level are the V sync pulses placed atop the V pedestal. They are of longer duration than the H sync, and are ser-

rated in form. Details of operational interpretation are given in Chapter 6.

When the monitor sweep is set at 30 cps, the *field frequency* waveform is displayed as in (2) of Fig. 3.4B. A single sweep now takes place in 1/30 second, and the lines of one field are traced out to the left of the V pedestal, and the following field is traced out to the right. The line at the extreme bottom is composed of the horizontal sync pulses for the lines comprising the fields above, and therefore do not appear if sync is not inserted at the camera control unit. Since there are approximately 262 such pulses for each field (one at the end of each line, 262.5 lines per field), the pulses appear as a horizontal line across the screen. The serrated V sync pulses are also on this line immediately under the V pedestal, but are hardly distinguishable as such due to their short time duration in ratio to the scope sweep of 1/30 second. In this case the heavy line at the blanking level is made up of the horizontal pedestals for the lines in the above fields.

A block diagram of the video and blanking mixer amplifiers of a typical camera control unit is shown in Fig. 3.4C. Several special types of circuits are used here that have not been described thus far in the text.

The first video amplifier in this intermediate chain of signal amplifiers receives the output from the camera preamp via a flexible coaxial cable interconnecting the two units. It is noted from the block diagram that this stage also receives a *shading sawtooth* signal. The image orthicon type of pickup tube is much less trouble to properly "shade" than is the iconoscope type tube used for telecasting films. Such tubes do, however, require a slight amount of corrective signal for optimum results. In contrast to the iconoscope whose continuously changing spurious response results from an uncontrolled rain of electrons back to the mosaic, an image orthicon tube, once properly shaded, will ordinarily need no further adjustment during any one period of use. Thus, should a picture appear bright on the right side of the raster and correspondingly dark toward the left side during a rehearsal, the shading adjustment may be made at that time and no further adjustment need ordinarily be made so long as the same tube is used. Therefore the shading adjustment does not usually appear on the front panel of a studio type camera control unit, but is ordinarily placed under a hinged cover or recessed corner. This is in direct contrast to controls for an iconoscope which must be continuously adjusted during a film program (section 2.6, Chapter 2).

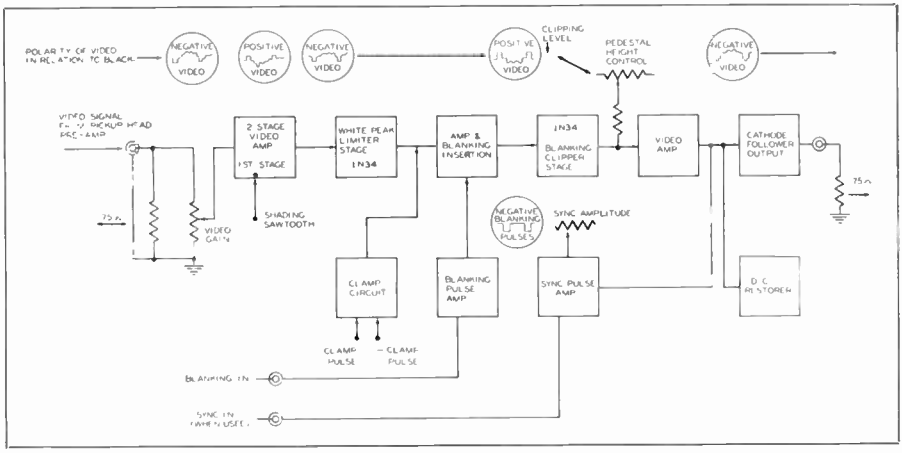

Figure 3.4C. Black diagram of typical commercial camera control unit, showing video section.

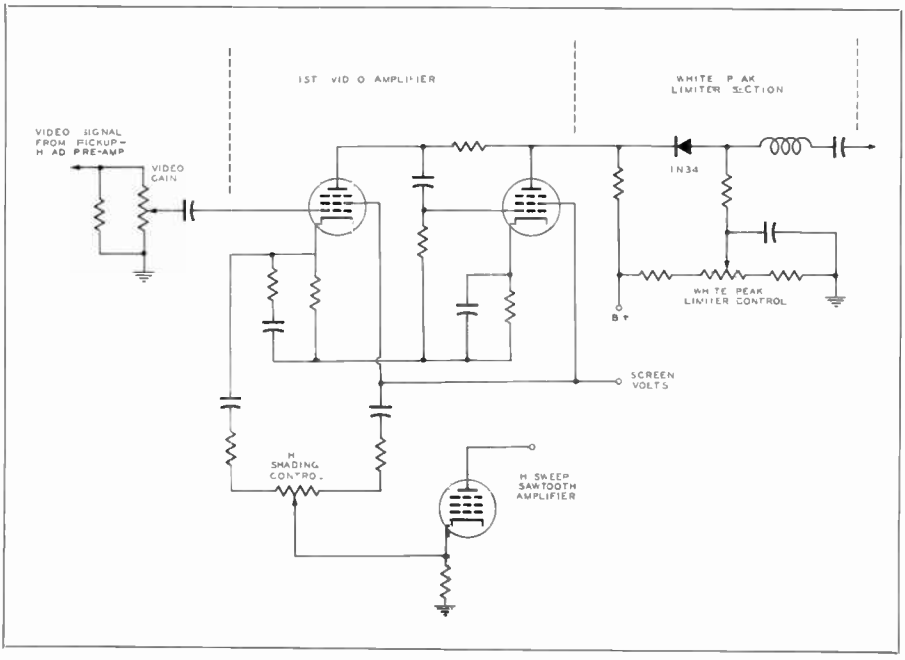

Figure 3.4D. Simplified schematic of first intermediate video amplifier, showing shading signal injection and white peak limiter stage.

Fig. 3.4D is a simplified schematic illustrating a typical circuit used. The video gain control is shunted by a terminating resistor used to fix the input impedance at 75 ohms. The shading signal is taken from the cathode of a horizontal sweep sawtooth amplifier (which may be in the monitor circuits of the control unit or a separate stage) and injected into the screen grid and cathode circuits of the first tube. Adjusting the shading control varies the amount and phase of the corrective sawtooth signal so that shading is accomplished for either right or left sides of the televised picture. Horizontal shading is all that is necessary for an image orthicon pickup tube.

This simplified schematic also shows the white peak limiter section shown in the block diagram. This 1N34 crystal network is in the plate circuit of the second tube. Because of the wide contrast range of image orthicons, white peaks of several times usable maximum white levels may occur due to unexpected reflections from such objects as beads, jewels, chrome plated objects, etc. The white peak limiter prevents such overloading. Adjustment of the limiter potentiometer control places a certain value of voltage at the arm of the control from the B plus plate supply. Parameters of the circuit are such that any signal voltage which rises above this potential will not be passed by the 1N34 crystal since its negative terminal will be too far positive to allow conduction. It is obvious here that polarity of the video signal at this point must be such that maximum signal corresponds to white level, known as *negative black* polarity. It is therefore noted that the video signal input to the grid of the first tube must also be negative black, so that the normal phase inversion of 180° causes a positive black video signal to appear at the grid of the second stage. Thus the input to the clipper is negative black.

At various points in commercial video amplifiers a *clamping circuit* is used.

Such a circuit is feasible due to the extremely wide bandwidth of frequency amplification that is necessary for television signal amplification. A clamping circuit accomplishes two things that at first appear to be contradictory in functioning: (1) improves low frequency video signal response, and (2) eliminates spurious low frequency pickup such as 60 cycle AC from the amplifier response.

How an electronic device may eliminate one low frequency signal and improve the response of another low frequency signal comprises the study of the clamping circuit which functions at high efficiency due to the nature of the TV waveform itself. Consider first the drawing of Fig. 3.4E. This is an AC signal source with a series R-C circuit and a switch. Drawing (1) is the graph of the signal voltage which would appear at the output terminals if the switch is open. Suppose now that the switch is closed (shorting the output terminals) for the duration of the shaded areas along the axis of the AC signal. Drawing (2) illustrates the severe attenuation of the signal appearing at the output terminals. It is understandable, then, that if the switch were opened and closed at a rate *much faster* than the frequency of the applied AC signal, the output voltage would be practically zero. A clamping circuit in a TV amplifier is actually an electronic switch which does exactly what is described above; opening and closing a switch at the horizontal line frequency (15,750 times per second), so that any 60 cycle *sine-wave* (such as would occur from a stray field) is greatly attenuated.

Consider now the action of the same circuit when the input waveform is *not* a pure sine-wave, but is broken up by *pedestals* at a fixed level, such as a video signal from the pickup head, with inserted blanking pulses. Drawing (1) Fig. 3.4F pictures the output waveform with switch SW open, showing that the same waveform appears as is applied. Assume at this time that some circuit action occurs which results in poor low frequency response. Drawing (2) shows the resulting waveform if the switch remains open as above. The low-frequency component is attenuated, but the pedestals (fixed levels) remain of the same amplitude. Thus the tips of the pedestal peaks vary from constant level above the DC axis as shown. (Review need for DC restoration; section 2.5, Chapter Two.) Thus if the switch is closed for the Δt intervals shown, the output waveform will appear as in (3), restoring somewhat the original waveform. Should the switch be operated electronically at a rate much faster than the applied waveform, *negligible*

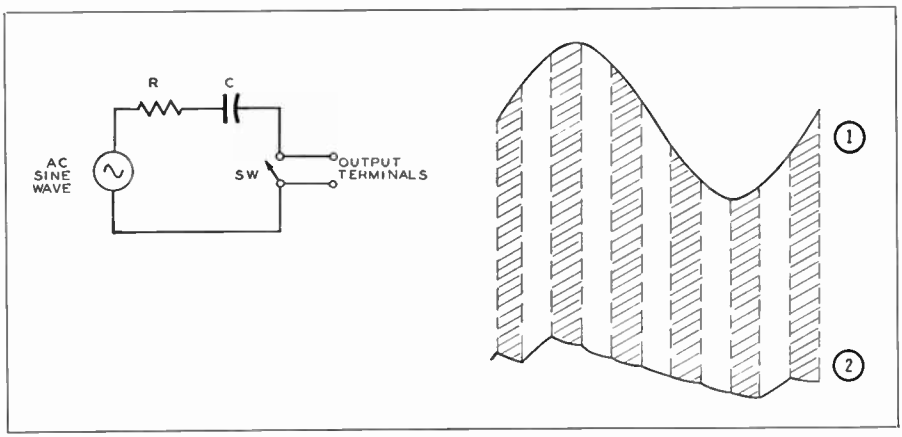

Figure 3.4E. Clamp circuit theory far sine waves.

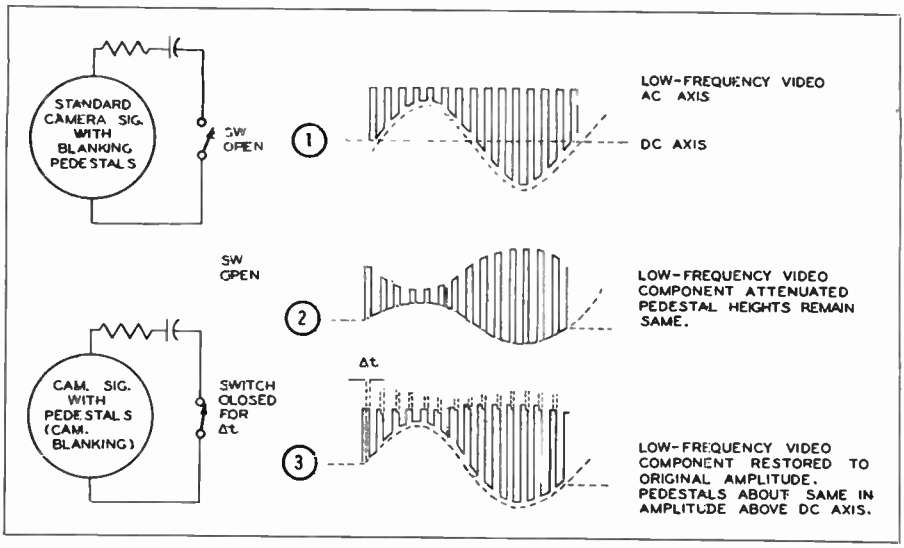

Figure 3.4F.

attenuation will result. In effect, the low-frequency video signals will be improved in response. It may be observed that the clamping action depends upon having a *fixed pedestal level for the duration of time in which the switch is closed.* In this way, low frequency *sine-waves* are severely attenuated, whereas video signals containing fixed pedestals are passed without attenuation, improving low frequency response without accentuating stray field response.

A clamper is variously known as a *keyed clamping* or *line-to-line clamping* circuit. It is used when desired to maintain all voltage amplitudes of either positive or negative parts of a waveform at some predetermined level. It is pulse operated, either during the horizontal sync pulse or the back-porch of the H blanking interval. The clamping process establishes a fixed level for repetitive pulses of a video signal, and may be used just as the DC restorer described in section 2.5, Chapter Two. When used in the intermediate amplifier of the camera control unit as now being described, the clamp switch is closed for a brief interval during the H sync or back porch, and opened during the active line scanning time. The point of injection of the clamping signal is shown in the block diagram Fig. 3.4C.

Fig. 3.4G illustrates one commercial type of clamping circuit commonly used in camera control units. This particular schematic is a simplified version of the clamper used in the Du Mont camera control unit Type 5028-B. Positive pulses from the cathode circuit and negative pulses from the plate circuit of the blocking tube oscillator supply the clamping pulses at H line frequency for the 4 diode clamper. Point (A) is the point to be clamped; that is, point (A) must be maintained at a predetermined reference level on successive pulses of the video signal. The diodes function as an electronic switch triggered in action by the horizontal line frequency pulses. When pulses are applied, point (B) becomes negative and point (C) becomes positive, creating the condition for diode conduction to occur. This is therefore equivalent to "closing the switch" of the simple circuit described above. When the diodes conduct, a rapid discharge path for capacitor C_1 results. During the active line scanning interval, the diodes do not conduct. During this time, should point (A) develop

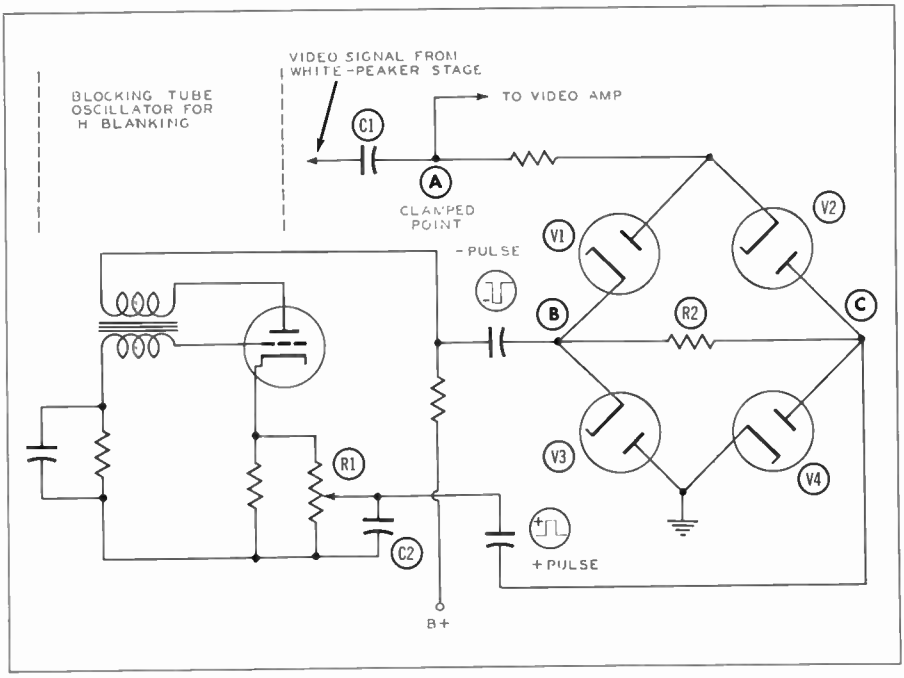

Figure 3.4G. Four-diode clamping circuit as used in DuMont camera control unit — after DuMont data, Courtesy DuMont Labs.

a positive DC potential, conduction will occur through V_1 to point (B). If point (A) should develop a negative DC potential during this time, conduction will occur through V_2 to point (C). In either case, the clamped point is maintained at a certain reference level which determines the DC level of the video signal. The resistor R_2 prevents point (B) from drifting in the positive direction and point (C) from drifting in the negative direction which would render the clamp inoperative. Thus the clamped point (A) is maintained at reference level during the line scanning interval, and discharged at the conclusion of each scanning line. By this means, interaction upon the video signal line information is prevented, since the time constant (product of C_1 and forward clamp resistance) is long compared with the line interval.

R_1 and C_2 are used for balancing the clamp circuit. The need for this may be realized by noting that point (A) is at high impedance, and therefore a small component of the pulse appearing at (B) will appear at (A) through the cathode-to-plate capacitance of V_1. From the same principle, a pulse from (C) will also appear at point (A). If these pulses are effectively balanced in phase and amplitude, their effect at (A) is nullified, since they are equal and opposite in polarity. Without R_1 and C_2 however, a slight unbalance would occur, since the cathode clamping pulse tends to rise more rapidly than the plate clamping pulse. By adjusting R_1 to balance the amplitudes, and C_2 to slightly delay the cathode pulse, an almost exact balance may be achieved in practice.

The next point in the block diagram of Fig. 3.4C is the stage for blanking pulse, or pedestal, injection. Fig. 3.4H illustrates one commercial method of this insertion known as suppressor-grid injection of the blanking pedestals. It should be noted that negative black

video is combined with negative pedestal voltages; the polarity being important since the video signal maximum black must occur just under the blanking level. The composite blanking signals from the sync generator are fed to a blanking amplifier, then to the suppressor-grid of the mixing stage. The large negative pulses on this grid result in plate current cutoff during this interval. The video signal and resulting pedestal formed by plate current cutoff appear as positive excursions (positive black) in the plate circuit, and are impressed upon the 1N34 clipper stage. The clipping level (hence pedestal level) of this crystal rectifier is determined by the setting of the Pedestal Height Control, since any amplitude of the signal which rises above the DC voltage on the arm of this control will not be passed by the diode.

The purpose of *clamping* at this point may now be more clearly understood. It is recalled from our discussion above that clamping occurs during the blanking intervals of the pickup tube. It is the grid of this stage (blanking insertion amplifier) which is the clamping point, being held to a predetermined grid voltage level. Therefore the pedestal control determines the clipping level at a voltage which is fixed in reference to the blanking level of the camera. Thus any necessary change in the video gain control on the first stage does not usually necessitate another adjustment of the pedestal control, since the *ratio* between black signal level and pedestal height is not affected by the gain control. In this way the pedestal is fixed with reference to black in the signal rather than to the average signal content.

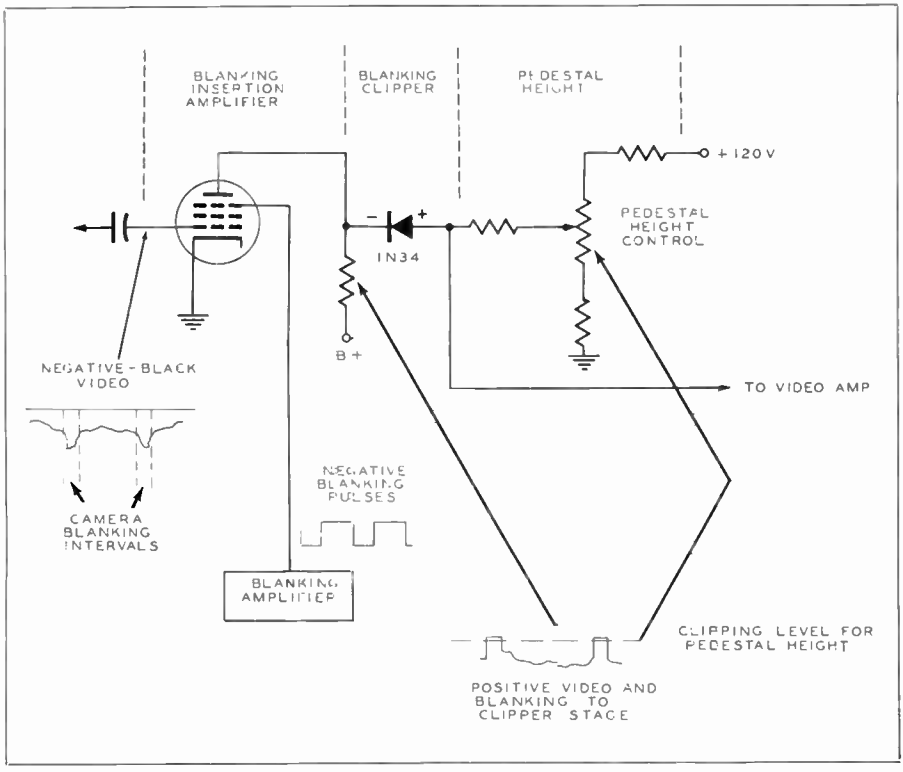

Figure 3.4H.

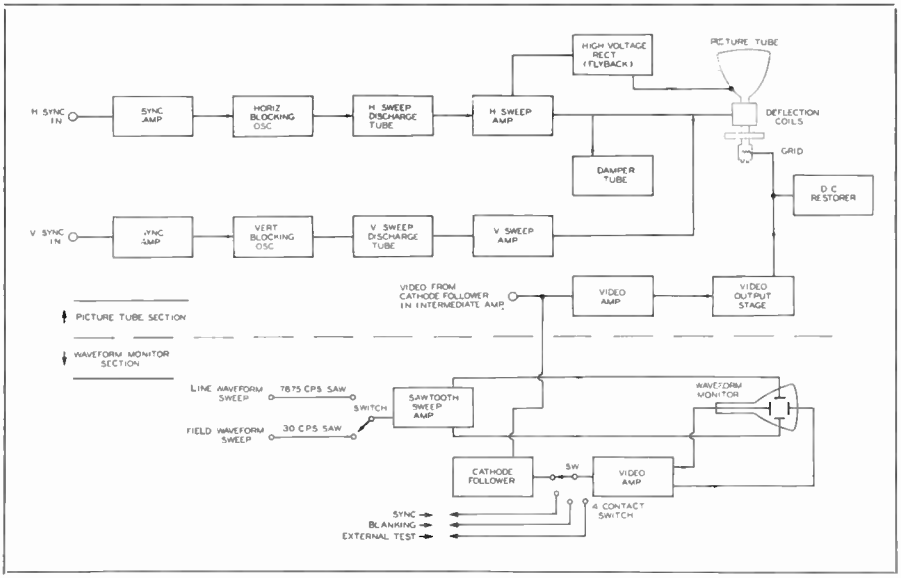

Figure 3.4I. Picture and waveform monitor sections of typical camera control unit.

The signal which now contains both video and pedestals is applied to a conventional wide-band amplifier to feed the cathode follower output stage. When only one camera is used and it is desired to insert the sync signals, the sync pulse amplifier is fed into the plate circuit at negative pulse polarity, and combined with the blanking pedestals in a common plate load resistor. When more than one camera is used, requiring addition of sync at a later point, the sync amplifier is biased below cutoff, allowing no sync voltage to appear at the output. Some camera control units insert the sync at a positive polarity stage, requiring positive sync pulses.

It should now be noted that in addition to the four controls mentioned earlier for the image orthicon tube in the pickup head, the camera control unit contains four other controls which directly affect picture quality. These are: (1) Video gain control, (2) Pedestal height control, (3) Horizontal shading control and (4) Sync level control, when sync is inserted in this unit.

Fig. 3.4I is a typical block diagram of the picture monitor and waveform monitor sections of a camera control unit. The picture tube section is very similar in function and design to the circuits described for the electronic viewfinder in section 2.5, Chapter 2. In some installations, the H and V driving pulses supplied to the camera are used for the sync pulses to drive this section of the monitor. In other cases, the composite H and V sync signal from the sync generator is fed to a sync separator stage and applied to the terminals shown. It should be recalled that the driving and sync pulses have the same timing bases in the sync generator. In either case, they are used to trigger their respective horizontal and vertical blocking oscillators for supplying the proper sweep timing to the picture tube. Video signal from the cathode follower output stage in the intermediate amplifier described above is fed to an amplifier stage and coupled to an output stage which is in turn coupled to the picture tube grid for video modulation of the electron beam. A DC restorer diode is used on the grid to maintain proper background level of the picture. (Section 2.5, Chapter 2.) The high volt-

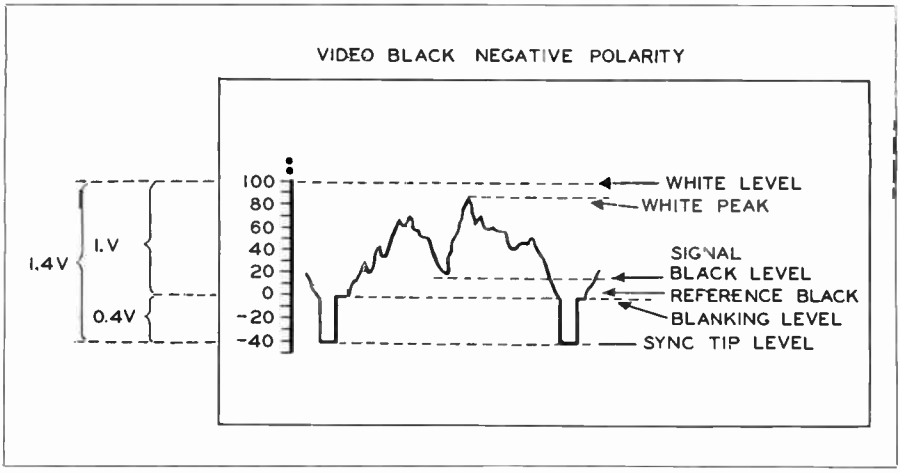

Figure 3.5A. Showing a typical scale for measuring television signal levels, typical measured leads, and reference leads. The "Reference Black Level" is arbitrary, determined by station operating practices.

age for the picture tube is supplied by the "flyback rectifier" operating from the H sweep amplifier and H deflection yoke, also described in section 2.5, Chapter 2.

Circuits associated with the waveform monitor are shown in the lower section of the block diagram. The line waveform sweep sawtooth (7875 cps) and the field waveform sweep sawtooth (30 cps) are selected by the switch at the input of the sweep amplifier. This switch is preceded by a separator circuit which separates the 30 and 7875 cps signals in the composite waveform output of the sync generator. A cathode follower bridged across the video signal is used to supply the video signal to the scope as shown, selected by a switch which has four possible positions. This feature is usually incorporated to allow observation of sync or blanking pulses instead of the video waveform when desired, and also to allow any external signal applied to be observed on the scope. Most commercial circuits also provide for the video waveform to be observed at both input and output terminals of the intermediate amplifier.

Further technical details of the camera control unit are included in sections 6.2, 6.4 and 8.10.

3.5 *Video Signal Levels*

The comparative levels of the composite television signal have been mentioned several times in this book, and in particular in section 3.2 of this chapter. In addition to maintaining approximately correct ratios of the various signals making up the composite waveform, the overall amplitude must be set up and maintained at some given level which will always correspond (at maximum value) to 100% modulation of the video transmitter.

The are six values to be considered in video levels. These are:

1. Reference White Level.
2. Maximum Signal White (White Peak).
3. Reference Black Level.
4. Maximum Signal Black (Black Peak).
5. Blanking Level.
6. Synchronizing Level.

These values are illustrated in Fig. 3.5A. In this illustration the video polarity is negative black, and *reference white* is 100 on the scale. The scale to the left is one type of scale adopted for measuring video levels.

Several important operational factors are illustrated here. It should be noted that the maximum signal white (white

peak) is held below "reference white" by about 10%. *Reference white* corresponds to approximately 12.5% carrier at the transmitter output. (Negative modulation, Chapter 1.) This allows the necessary safety factor in the white peak direction, since severe overshoots in this direction causing carrier cutoff (zero percent carrier) result in distortion. It is also noted that signal black level is held to 10% below the blanking level, this being the *setup* value of the blanking level. This factor is desirable to prevent overshoots of black signal into the sync region. The blanking level is at 75% of maximum transmitter carrier value, the remaining 25% of carrier occurring on sync peaks.

The technique and standards of measurement in video levels is undergoing the same process of development as occurred during the interval in sound broadcasting before the VU meter. In television, it is imperative that the operator have available a means of ascertaining wave-form as well as level. The level measurement in itself is more complex than the audio counterpart, since several different signal levels must be maintained in proper ratio to one another. To meet these critical requirements the cathode ray oscilloscope is used universally for monitoring of the video signal.

It is quite natural therefore that the final standards set will result after long experience in the field as to optimum overall level values necessary for most efficient transmission of video signals over coast to coast networks with minimum distortion effects. The importance of maintaining a standard value of levels for all video sources cannot be over-emphasized. For example, a change in amount of *setup* used changes the over-all brightness, requiring continual adjustment of receiver or monitor brightness controls. Since program fidelity is becoming increasingly important as the first novelty of TV wears off, the study of this problem assumes an ever increasing importance to video operators.

In the year 1946, standards were adopted by the industry specifying a 2 volt peak-to-peak signal displayed on the scope as the reference level. Thus 1.5 volt of signal comprised the video and blanking signals, with about 0.5 volt of added sync to total the 2 volt peak-to-peak composite signal. The 2 volts is related to the standard 75 ohm transmission line used to interconnect equipment.

Early in the year 1950, the study of video transmission levels concerned in network operation was put under a microscope by interested groups from New York TV stations and the Bell System. Representatives from TV equipment manufacturers also assisted in the study. It was found at that time that an appreciable percentage of studio equipment already in use was inadequate in linearity to provide optimum performance of large numbers of video amplifiers in cascade, when the reference level of 2 volts was used. The culmination of the study was that the reference level could be reduced somewhat with consequent increase in fidelity of signal without increase in noise levels. It was proposed that the standard operating level be established at 1.4 volts peak-to-peak of composite TV signal as illustrated in Fig. 3.5A.

This scale form is an adoption from the IRE Standard Scale, as published by the Institute of Radio Engineers in 1950. (Standard, 50 IRE 23.S1—TELEVISION: METHODS OF MEASUREMENT OF TELEVISION SIGNAL LEVELS, 1950.) The special study committee of network broadcasters and equipment manufacturers decided to recommend correlating the 1.4 volt video standard level to the arbitrary units in the IRE scale. This relationship is then:

$$\text{Videl Signal in Volts} = \frac{\text{Number of IRE Scale Units}}{100}$$

Thus from 0 to 100 on the scale represents 1 volt of signal, and 0 to —40 represents 0.4 volts of sync signal.

Fig. 3.5B illustrates the three scales recommended for the various points to be monitored. Operating scale No. 1 is

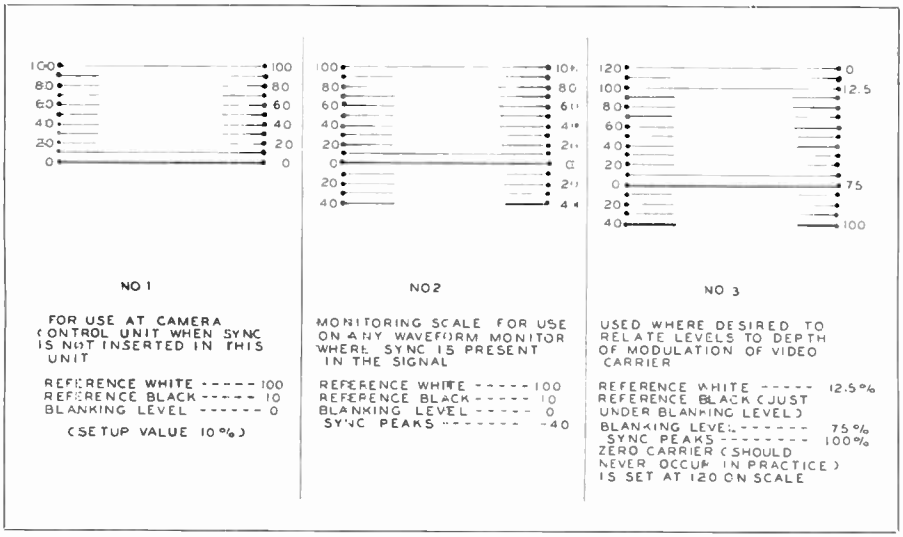

Figure 3.5B. Video level measuring scales as recommended by IRE standards (Black Negative Polarity).

for use at the camera control unit when sync *is not* added at this point. Reference white is at 100, reference black at 10, and blanking level at 0. It is noted that the reference black level at 10 is a continuous line as is the blanking level at 0. This *setup* level is very important. In a theoretically perfect transmission system, black level and blanking level could be maintained the same, thus utilizing to the fullest extent the video amplifier gains. In practice, however, some amplitude distortion exists, resulting in at least slight amounts of overshoots in the black region. When this occurs, unless the receiver controls are adjusted to clip black peaks, some retrace lines are visible on the picture. This results in *compression of blacks*. By raising the setup value to about 10%, optimum operating conditions are realized. The setup must be constant and of the same value between cameras (studio or film), slide boxes, studios, networks, etc., to maintain constant background brightness in the home receiver.

The amount of setup is also important in considering the action of the *stabilizing amplifier* to be described later. This amplifier somewhat reduces the applied setup level, emphasizing the importance of sufficient setup level from the camera control unit through the final video amplifier.

Operating scale No. 2 (Fig. 3.5B) is recommended where the composite signal level (sync added) is to be measured. Reference white is at 100, reference black at 10, blanking level at 0, and sync peaks at —40. This type of scale is common at the line monitoring position.

Operating scale No. 3 is recommended at transmitter locations where desirable to relate the arbitrary IRE units to depth of modulation of the video transmitter carrier wave. Reference white of 100 represents 12.5% carrier, zero carrier being represented by 120 on the scale. Reference black is at 10, and blanking level at 0 represents 75% carrier. Sync peaks at —40 represents 100% carrier modulation. The relationship to the FCC specifications of carrier levels may now be observed. Zero carrier level (which should never occur in practice) is set opposite 120 on the IRE scale, and maximum carrier opposite —40. Blanking level (zero on scale) then occurs at 75% of maximum carrier, and reference white (100 on scale) occurs at 12.5% of maximum carrier.

3.6 *Camera Switching and Mixing*

Since practically all TV stations of even the smallest types must necessarily use more than a single camera source at some time in its daily schedule, some means of switching signal sources must be included. Also desirable is a means of fading out or in on a given signal, and the momentary mixing of two separate video signals for purposes of lap-dissolves or deliberate superimposition of pictures.

Fig. 3.6A is a photo of one commercial type of Camera Switching Panel. Fig. 3.6B is the block diagram of this unit. The video amplifiers are located in the lower compartment of the console. There are 2 two-stage amplifiers for each picture channel. Another two-stage amplifier feeds the monitor from a selector switch allowing preview or on-air monitoring. Observation of the block diagram also shows the sync-interlock system which automatically adds local sync upon failure of remote sync (when broadcasting from a remote point), or may be used when local sync is otherwise required. Sync signals for local telecasts in this system are usually added in the following stabilizing amplifier position described later.

Controls for the switching amplifier project through the inclined top panel of the desk as shown in the photo. These consist of two banks of pushbuttons which select the on-the-air signal; two toggle switches for adding local sync to incoming remote signals; gain controls for the remote signals; fading controls (also used for lap-dissolving); a three-position switch for selecting either one of the two remote signals or on-the-air signals for display on the picture monitor; and tally lights which indicate the inputs being used.

The Camera Control Units described in the preceding section are connected to the switcher by means of standard 75 ohm flexible coaxial cables. The particular unit under discussion accommodates the outputs from four camera controls and two remote or network sources. The remote or network video signals are accompanied by sync from that source,

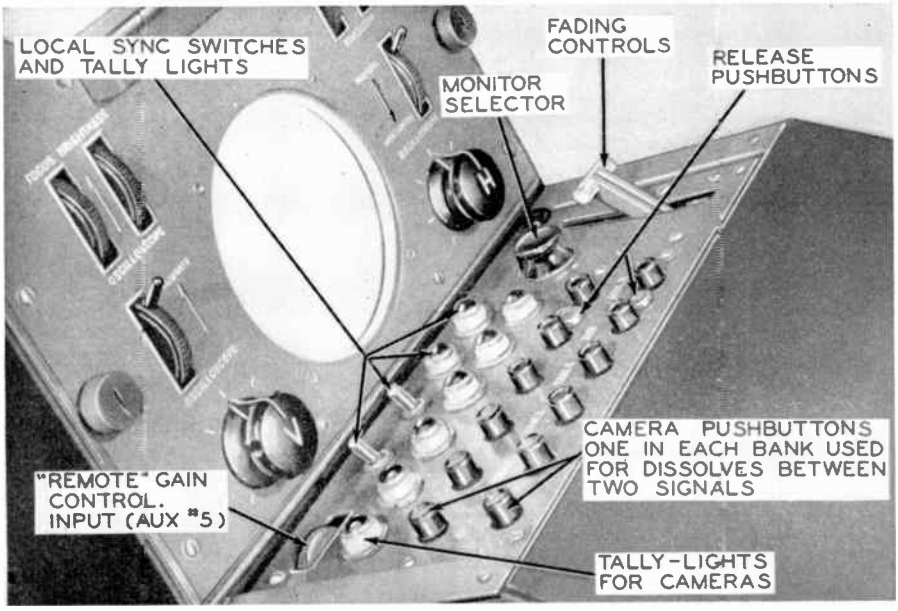

Figure 3.6A. RCA type TS-10 switching panel. Courtesy RCA.

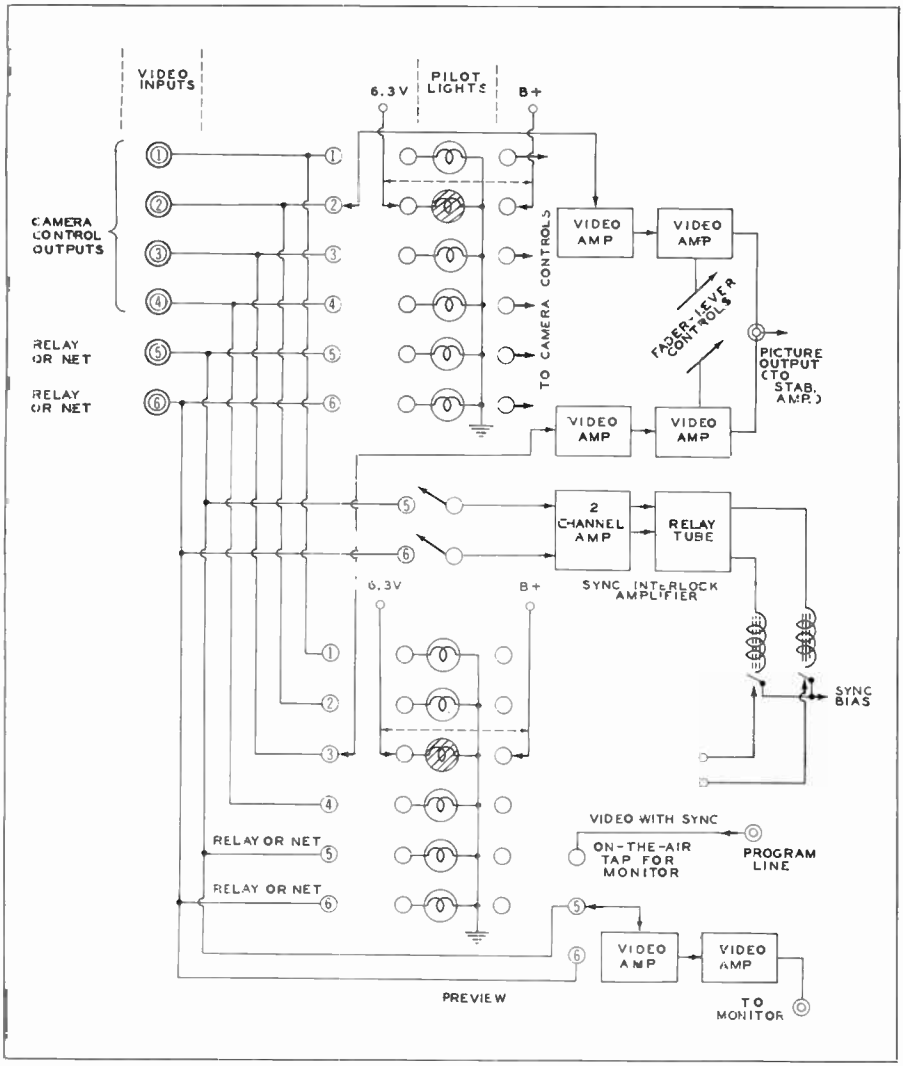

Figure 3.6B. Block diagram of RCA type TS-10A switching system. The diagram indicates that camera No. 2 pushbutton is operated on the upper row of keys, causing No. 2 pilot bulb to light, and camera No. 3 pushbutton on the lower row of keys is operated, causing No. 3 pilot bulb to light on that row. The output signal is then determined by the respective positions of the lever type fader controls. The diagram is also indicating that the monitor selector switch is thrown to No. 5 terminal, which may be a remote or network signal. Thus the monitor is previewing that signal.

whereas local camera signals fed to the mixer unit are video and blanking only, without sync. The two banks of pushbutton switches feed separate amplifiers which have their outputs connected together to feed the line connecting the Stabilizing Amplifier, which is usually rack-mounted in the control room. When desired to switch instantaneously from one camera to another, one bank of pushbuttons is used. Depressing any pushbutton releases any other pushbutton on the same bank by an interlocking feature. This prevents two sources from

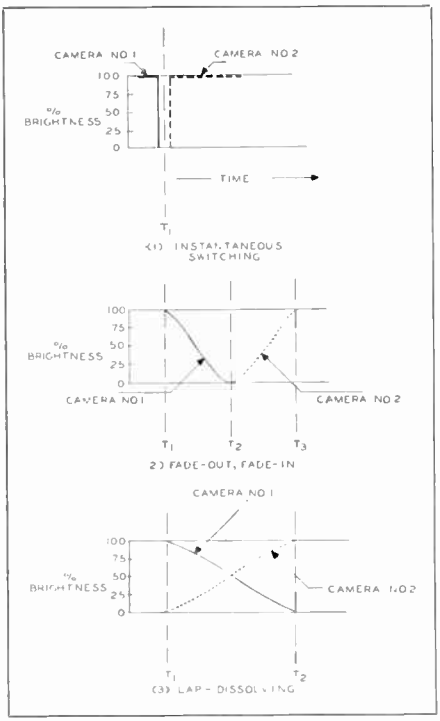

Figure 3.6C. Video switching techniques, showing three most common types of signal switching.

being fed to a common amplifier at the same time. When it is desired to lap-dissolve or superimpose two pictures, both banks of pushbuttons are used. Assume for an example that 4 cameras are being used, number 1 being on the air at this time. Assume also that this is being accomplished by having camera No. 1 pushbutton on bank No. 1 depressed. Now by depressing camera No. 3 pushbutton on bank No. 2, both camera output signals are fed through respective channels and combined in the output. Each picture may be adjusted in relative brightness by adjusting the respective fader control (lever-type control) shown to the right of the control panel. (Fig. 3.6A.) The fader controls are shown operated together in the illustration. When adjusting relative brightness of the two different sources as in superimpositions, the handles are separated and operated independently. Thus either picture may be faded out entirely, at any time ratio.

Fig. 3.6C shows the technical definition of the three common types of switching in use during telecasts. In (1), camera 1 and camera 2 are switched instantaneously. This is to say that camera 2 pushbutton on the same bank of switches on which camera 1 pushbutton was depressed, was operated, immediately releasing camera 1 and feeding camera 2 signal. In (2) is shown the "fade-out, fade-in" technique. Camera 1 pushbutton is depressed on one of the banks and is adjusted at reference brightness level up to time t_1. At this instant, camera 2 pushbutton on the other bank is depressed, but its fader control is adjusted at zero brightness. Simultaneously, the fader for camera 1 is adjusted from reference brightness (100% on scale) toward zero. By time t_2, camera 1 is *faded out* and the fader for camera 2 is adjusted from zero brightness toward reference brightness. By time t_3, camera 2 signal fully occupies the screen, and is entirely *faded in*. In drawing (3), camera 1 pushbutton is depressed on one of the banks and its fader adjusted at reference brightness as above. Camera 2 pushbutton on the other bank is also depressed but its fader is at cut-off and only camera 1 signal is transmitted up to time t_1. At this time the fader for camera 1 is adjusted toward cut-off, and (simultaneously) camera 2 fader is adjusted toward reference brightness. Thus between t_1 and t_2, both signals appear on the screen while signal 1 is decreasing and signal 2 is increasing. At time t_2, camera 2 signal fully occupies the screen and camera 1 is completely faded out.

Operating techniques are thoroughly covered in Chapter 6.

In installations where a large number of video sources are involved, or even in small stations which contemplate expansion, remotely controlled relays are used to switch the video signals. In this type of switching the relays may be rack mounted, with all the various coaxial cables centralized, and with individual relay switching panels installed at

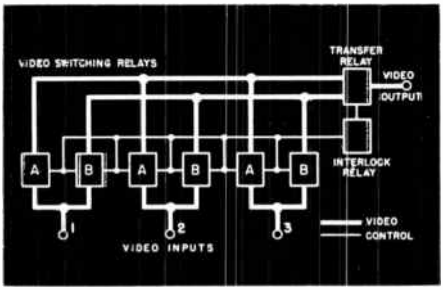

Figure 3.6D. Block diagram illustrating basic switching scheme of RCA relay switching system. The relays (A) and (B) are electrically operated by pushbuttons. Courtesy RCA.

points most convenient for any particular installation. The push-keys themselves are non-locking in this type of switching, the interlocking action taking place in the relay system. That is, the push keys operate the relay coils, which themselves are connected in a "lock-up" type of circuit which drops out any relay already operated when another relay is operated.

Fig. 3.6D is a simplified block diagram of the RCA TS-20A video relay switching system. The type of relay and method of mounting is illustrated in Fig. 3.6E. The contacts extending through the chassis are the inputs to the video contacts. The output or "operated" side stands above the relay frame. The basic chassis provides the circuits and relays for switching six inputs to two outputs. When additional inputs or outputs are required, auxiliary relay panels are used. Two general types of switching are possible with relays; gap or overlap. The instantaneous switch illustrated in (1) of Fig. 3.6C is known as *gap* switching, or break-before-make contacts. *Overlap* switching is make-before-break contact, thus a black gap between signal switching is avoided. Either type of switching is obtainable in the RCA relay system. Lap-dissolving simply involves the use of a mixing console in conjunction with a relay system when used.

The basic action of a video relay switching is illustrated by observing Fig. 3.6F and the following description.

Each incoming video signal is connected to *make contacts* on a *pair* of switching relays. Two video bus wires which run to a transfer relay are connected to the other side of these contacts. When the associated "Channel 1" pushbutton is operated, relay (A) will close, connecting the incoming video signal to one of the transfer bus wires. Other contacts on this same switching relay operate the transfer relay connecting the output line to the video bus wire and hence to the video signal. When another pushbutton (not shown) is operated, separate contacts on the transfer relay informs the new video switching pair that bus (A) is in use, which causes (B)

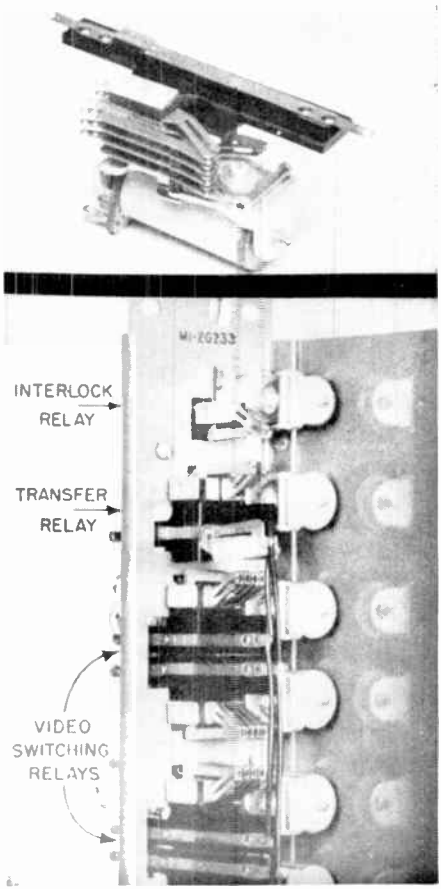

Figure 3.6E. Video relays. Courtesy RCA and Broadcast News.

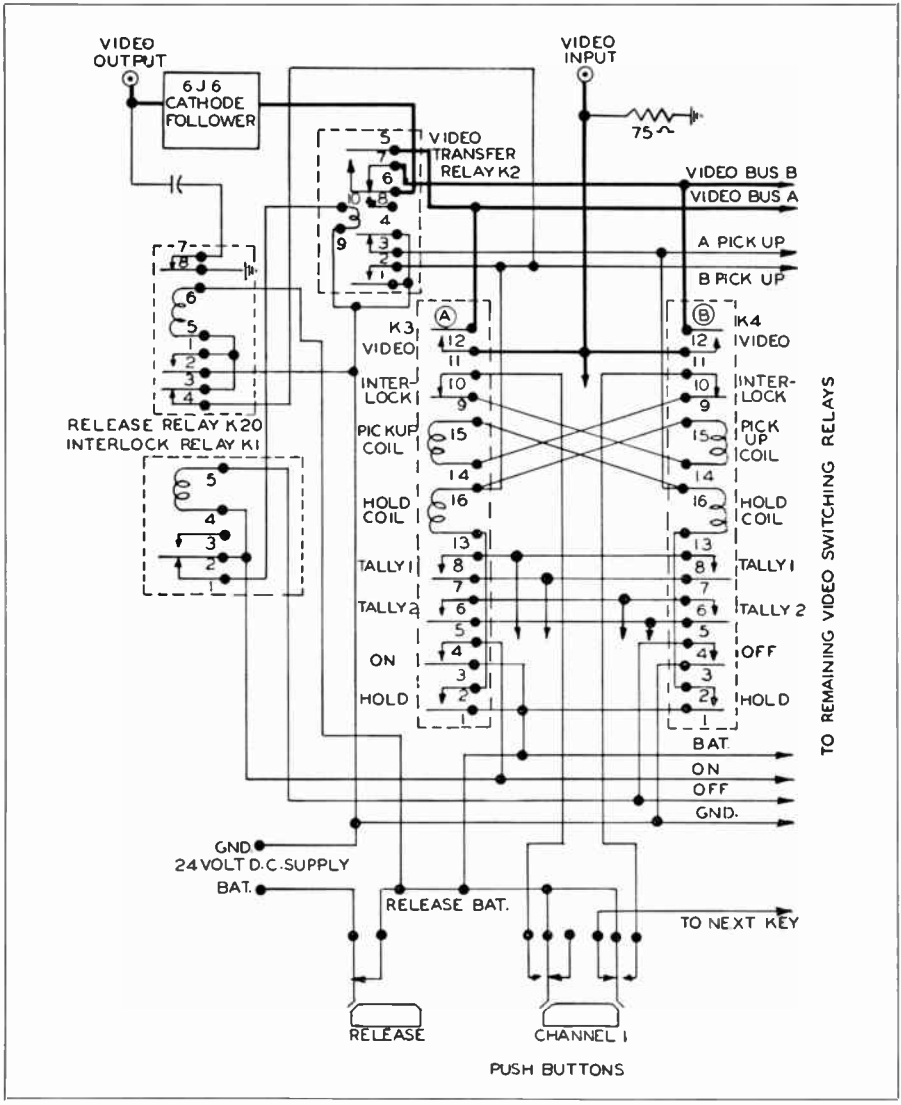

Figure 3.6F. Circuit details of RCA relay switching system. Courtesy RCA.

switching relay to operate. It is observed that had we started out with our description at a time when (A) was already in use, operation of the pushbutton shown would have caused (B) relay to operate instead of (A). When the video contacts on the (B) relay close, the new incoming video line is connected to the "B" video transfer bus wire. At this same instant other contacts on the (B) relay close, operating an interlock relay which in turn releases the transfer relay. In this way the outgoing line is transferred from the original input to the new input. Circuits of (A) relay are now released from the "busy" hold of the transfer relay contacts and the above process is repeated upon subsequent operation of the pushbuttons.

In this system the time of the signal transfer is determined entirely by the transfer relay rather than being governed by the individual relays' operate and release time. By choice of appropriate connections to the video transfer bus wires, either gap (break-before-make) or overlap (make-before-break) switching is available.

Another popular type of television control room switching is known as *audio-video* switching. In this method audio channel relays may be operated from the video relay system. Or an audio console with its associated relays may provide for operation of the video relay bays. Such systems are usually made variable so that either separate or tied-in operation may be used.

When several channels must be switched simultaneously between several outgoing lines, *preset switching* methods are used as discussed under the master control later in this chapter.

Further technical details of switching units are included in section 8.11.

3.7 *The Stabilizing Amplifier*

The primary function of a stabilizing amplifier is to correct any fault existing in the video signal. Such faults may be hum, switching surges, noise, or sync tip modulation. It may also be used to insert sync pulses into the composite signal, or in some instances is used to separate sync from the composite signal.

Stabilizing amplifiers may be found in the control room as the first amplifier for incoming network programs, incoming remote relay position, and following the switcher unit described in the above section. This type of amplifier is also found at the transmitter room, being used as the first amplifier from the coaxial cable connecting the studio, or from the studio-to-transmitter RF relay receiver. The unit contains video amplifiers, sync separators, sync insertion circuits, keyers, shapers, and clamping circuits.

The first two or three stages usually provide linear video amplification, and a means of inserting the composite (hori-

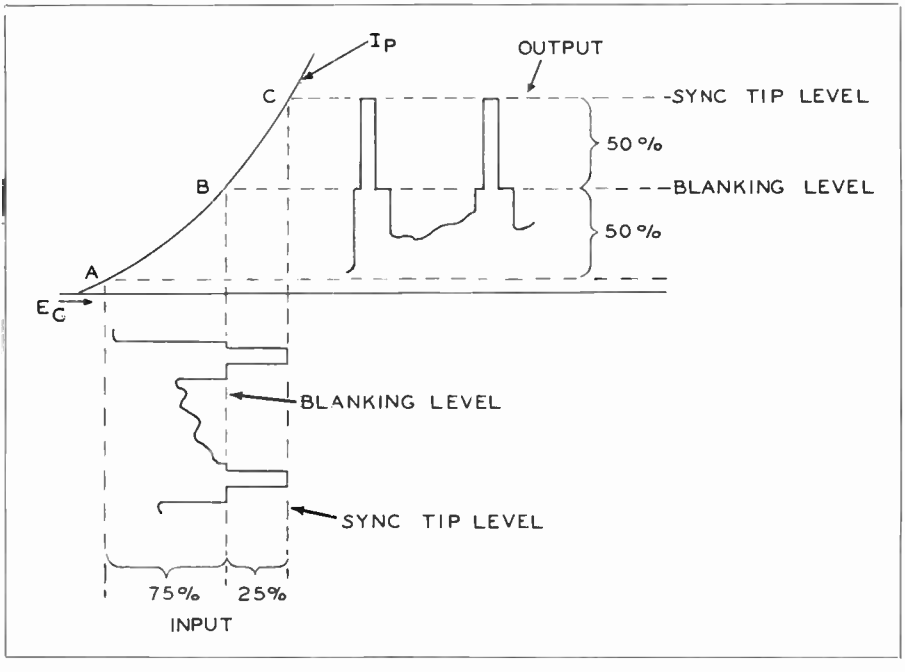

Figure 3.7A. Basic action of sync stretcher.

zontal and vertical) sync pulses. Such insertion is accomplished by means of two input tubes with a common plate or cathode load. The combined video and blanking signal is fed to one tube, and the composite sync to the other tube. The signals are then mixed in the common load. This stage is then followed by one or two linear video and sync amplifiers.

At this time a phenomena known as *sync stretching* takes place. Fig. 3.7A illustrates the electrical function of a sync-stretcher circuit. This type of circuit employs both a class A stage and class C stage. Over the normal video signal range up to the blanking level (points A to B on the total plate curve), the amplification is linear. At blanking level, the class C stage also begins conduction, adding to the total signal from blanking level to sync tips (points B to C). In this manner, a normal composite signal input of 25% sync and 75% video, may have its output sync region expanded as shown. There are several reasons why this function is desirable. For example, if the sync tips should become modulated by any stray noise pickup, sync stretching allows a following clipper stage to remove the modulated tips. Also, in the case of incoming network lines or remote signals of any source, the sync region is apt to become compressed, thus requiring stretching to restore proper sync-to-signal ratio.

The blanking level at point B is held at this constant level by a clamping circuit (section 3.4) which functions independently of the picture amplifier. The clamp circuit "clamps" the peak of each blanking pulse at the correct point on the amplifier curve, and eliminates spurious low frequency components from the signal.

The resulting amplifier composite signal is then fed to a clipper stage. The sync is here clipped by an amount determined by grid-bias adjustment or whatever type of clipping circuit is used in this stage. The proper sync-to-signal ratio is thus restored after the faults have been removed. The grid circuit of this clipper is also usually clamped at blanking level so that the predetermined sync amplitude is independent of variations in the average video signal amplitude. Thus, in this stage also, spurious signals are eliminated from the video and blanking portions of the composite signal.

The output of a stabilizing amplifier consists of two stages; one to feed the line or transmitter, the other to feed a monitor bus.

The reader should note from what was said above that the clamping in the sync-stretcher stage is independent of the video signal in the amplifier. What this means is that keying pulses (section 3.3) are derived from the sync portion of the incoming signal or from the sync input itself, properly shaped and amplified, and used to operate the clamping circuits. The keying-pulse shaping circuits which develop the clamping pulses provide a delay in time so that clamping takes place during the portion of blanking signal which follows the sync interval. This is the "back-porch" interval of the blanking pulse. Clamping during this interval is much more effective than attempting to clamp on sync tips, since any compression of the sync region would tend to defeat the purpose of the clamping circuits.

Further technical details of the stabilizing amplifier are included in sections 6.6 and 8.7.

3.8 *Video Monitors*

Monitors at the camera control position and at the mixer-amplifier switching unit have been mentioned. Monitors may also be used at various other points in the control room depending upon the size and complexity of the particular installation. Several Master Monitors are usually used, since one such monitor should be showing the "on-air" video at all times. Other master monitors may then be used to preview individual camera lines, film chains, network or remote signals so that the quality of these pictures may be judged before switching into the program line. Most of the video monitors incorporate the waveform monitor as well as the picture monitor,

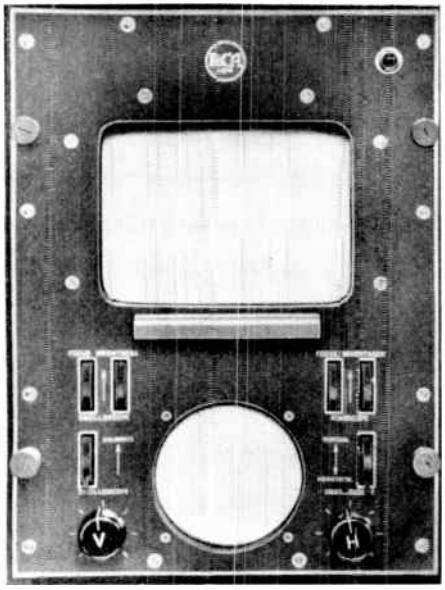

Figure 3.8A. Front view of RCA TM-5A master monitor.

since much useful information is more readily interpreted by waveform observation than by actual picture appearance (Chapter 6).

Fig. 3.8A illustrates the RCA TM-5A Master Monitor. Fig. 3.8B is a simplified block diagram which should be followed during the following description.

Two video inputs are provided, one for the picture monitor and one for the oscilloscope (waveform) monitor. These inputs are normally tied together, but may be separated if desired to monitor separate sources simultaneously. The composite video for the kinescope tube picture monitor goes through 2 stages of amplification, then to a cathode follower output feeding the grid of the picture tube. This signal modulates the tube's scanning beam in accordance with the picture information. An additional tube is used as a DC restorer on the grid of this tube. (Similar to that described in section 2.5, Chapter 2.) The brightness

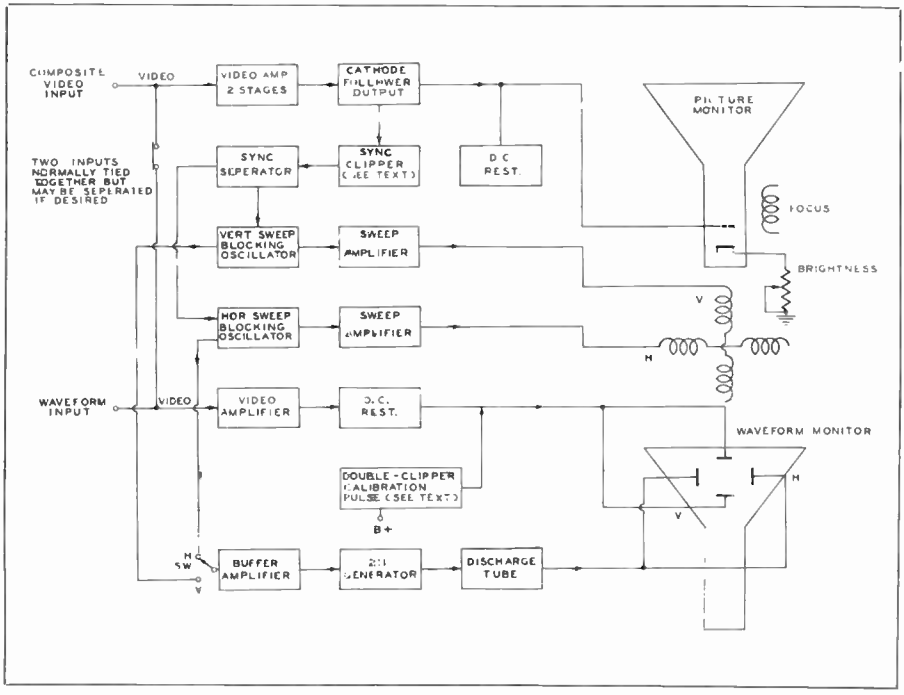

Figure 3.8B. Block diagram of RCA TM-5A master monitor.

control for the tube is shown as providing bias adjustment, hence intensity of the scanning beam. The video amplifier output also feeds a "sync clipper" stage as shown in the diagram. This stage operates essentially as a class B or C amplifier, conducting only upon peaks of the signal, thus passing only the sync pulses and eliminating the picture signals. The composite sync pulses are then fed to a conventional sync separator circuit which separates H and V pulses and feeds them to their respective blocking oscillators. These blocking oscillators generate the appropriate scanning pulses, amplified by sweep amplifiers and fed to the horizontal and vertical deflection coils of the picture tube. The action of all such circuits have been described earlier and need not be repeated here.

The picture input to the cathode ray oscilloscope waveform monitoring circuits is also amplified before being applied to the vertical deflection plates of the oscilloscope. As shown, a DC restorer stage is also used here to hold the black level constant. Incorporated in these circuits is a double clipper stage which develops a pulse having a constant peak-to-peak value in direct ratio to the B plus supply. Since this supply is well regulated, the pulse always has the same value, and is adjustable to a predetermined value such as 1.4 volts. This pulse is known as the *calibration pulse*, and whenever the "calibrate" switch on the front panel of the monitor is operated, the height on the screen allows a convenient means of observing the peak-to-peak amplitude of the waveform.

It is noted from the simplified block diagram that no provision is shown to drive the waveform monitor section from the half-line and half-frame oscilloscope driving pulses from the sync generator, as occurs in other monitors in the system. Since this monitor is often used as a portable instrument, so that it may be plugged in at convenient points where monitoring is desired, without permanent wiring or rack mounting, it is designed to operate from a composite signal. When used to monitor a non-composite signal, such as a camera chain before sync insertion or for other testing (detailed in MAINTENANCE, Chapter 8), provisions are included to drive the monitor from the H and V driving signals supplied to the rest of the terminal equipment. Therefore this particular monitor has its own means of providing the half-line and half-frame frequencies for allowing two lines or two fields to be displayed on the 'scope. A switch on the front panel selects either the vertical or horizontal blocking oscillator outputs (from Kinescope generator section) to be applied to the buffer stage in the waveform section. This buffer drives a 2:1 frequency divider, which divides either line or frame frequency by two. These waves are amplified and applied to the horizontal plates of the oscilloscope for sweeping the video signal.

Further technical details of the master monitor are included in sections 8.5 and 8.6.

3.9 *Remote Sync Phasing Units*

One of the most apparent problems in telecasting from the viewers standpoint is the interlocking of sync phase between local and remote program originations. As the state of the art progresses, the viewer will not expect to see the vertical roll-over so often apparent when the program signal is switched from local to remote, and vice-versa. The problem is to be able to "lock-in" the exact phase relationships of two different sync generators, the one in the control room and the other at the remote point. Without such lock-in, the horizontal or line-frequency scanning pulses change very quickly and momentary loss of H sync is negligible; but the higher inertia of the vertical or field frequency pulses causes noticeable loss of vertical hold. This results in the vertical roll-over mentioned above. It is also apparent here that lap dissolves or superimpositions of local and remote signals is impossible under these conditions.

For this reason some means is used in the modern TV control room to lock the sync generators together in both

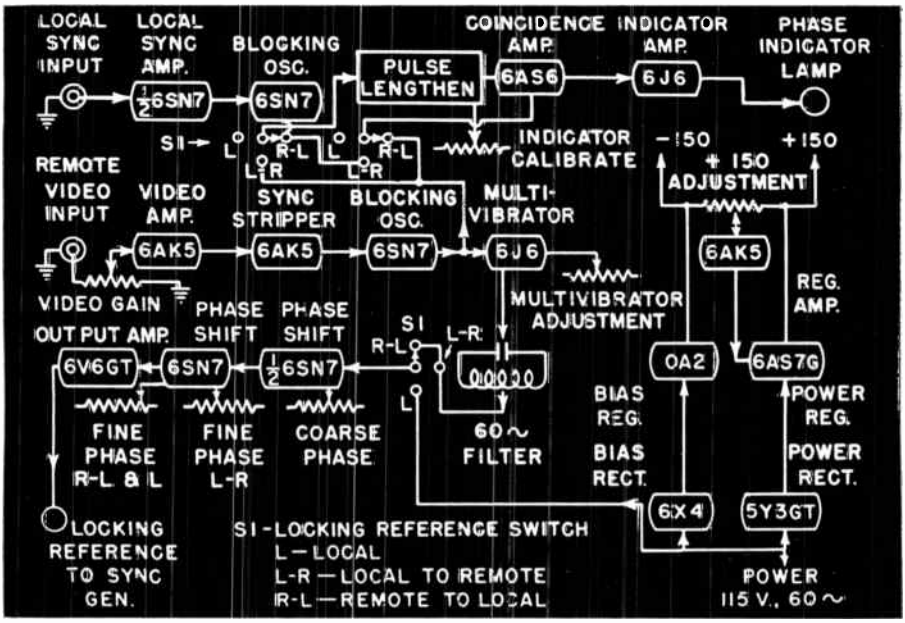

Figure 3.9A. Block diagram remote sync phaser unit by DuMont. Courtesy DuMont Labs.

field and line frequencies. This is achieved by locking the main sync generator as a "slave" to the remote sync generator as the "master." As in the case of any single unit involved in the entire line-up of control room equipment, it is impractical to discuss all the various methods of achieving this means. One typical unit will be described for the purpose of illustrating the principles involved.

Fig. 3.9A is the block diagram of the Du Mont Type 5056-A Remote Sync Phasing Unit. Its purpose is to provide a locking reference sine-wave to the frequency controlling unit of the main sync generator at the control room. It should be noted that the locking reference switch (S1) has three positions; Local (L), Local to Remote (L-R), and Remote to Local (R-L). The Local position locks the slave sync generator to a local power line over a phase range of 400 degrees, thus permitting exact phase relationships of two sync generators on the same power line. An example of the use here is in exactly phasing the motion picture film chains which sometimes involve synchronous motors to drive the shutter on the projectors. It is often noticed that switching (for example) from a local studio camera to a film camera, that the same type of momentary roll-over is effected that occurs when switching from local to a remote point. This occurs even when two identical types of sync generators are operated from the same power line, since, without automatic lock-in, there is a random variation in line-frequency pulses between the two. This is true even though the average frequency is constant and the same in both generators.

When used for locking-in the main sync generator with one at the remote location which is usually operated from a separate power line than that at the studio, the remote composite signal is first fed to the video amplifier. This stage is followed by a sync stripper circuit, which removes the sync pulses which then are applied to the blocking oscillator tube. The resulting pulses trigger the following multivibrator whose output is applied to a filter circuit for the purpose of deriving a sine-wave

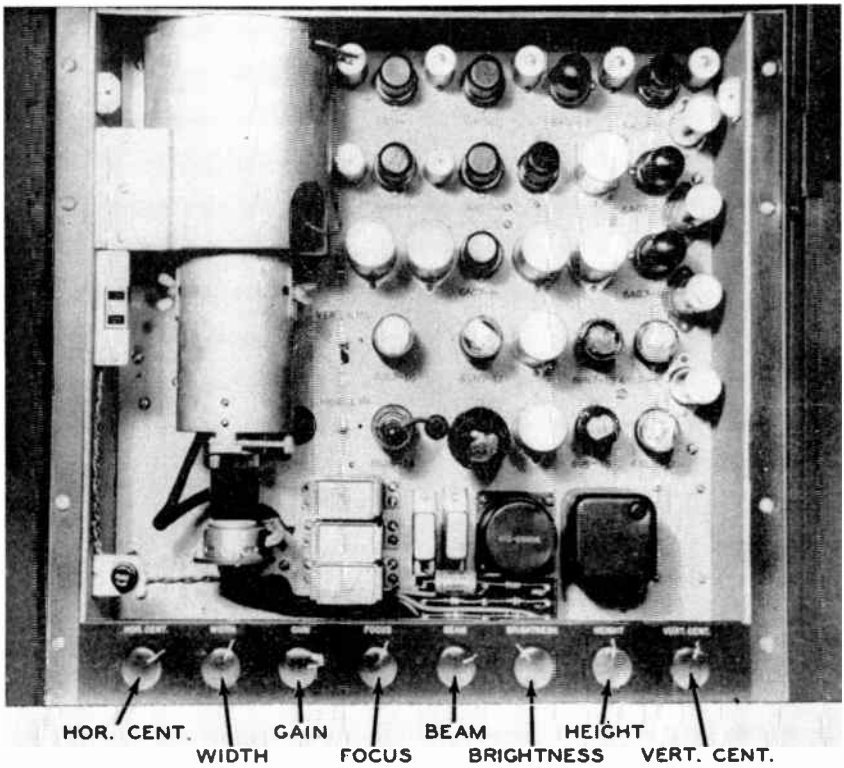

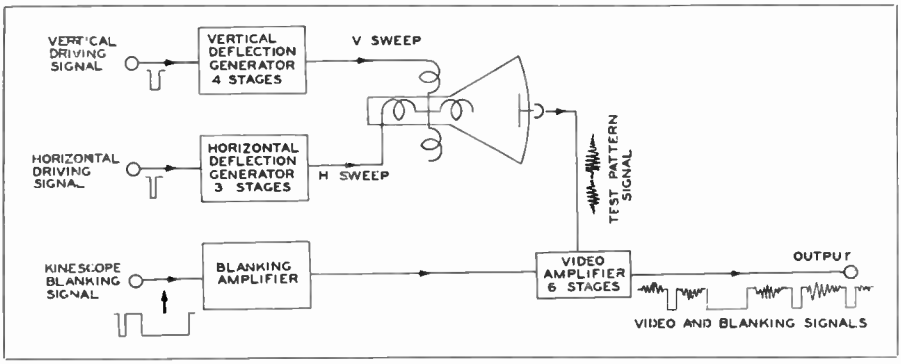

Figure 3.10A. Phata and black diagram af RCA manoscope camera.

for driving the slave sync generator. The phasing controls permit an adjustment over a 400 degree range, and when once set, will hold the phase within 1 degree of the value derived. This circuit incorporates separate "fine-phase" controls for Local-to-Remote and Remote-to-Local, eliminating adjustment for each signal-switching operation.

The phase indicator lamp is used to give visual indication when the phase difference between the vertical sync intervals of the remote signal and the local sync generator are within the RTMA limits of 5% leading and 1% lagging. When the locking reference switch is in the Local-to-Remote position, the sense of the indicator corresponds to local sig-

General:

Heater, for Unipotential Cathode:
- Voltage. . . . . 6.3 ± 10%. . . . . ac or dc volts
- Current . . . . . 0.6 . . . . . amp

Direct Interelectrode Capacitances
- Grid No.1 to All Other Electrodes. . . . . 7 . . . . . μμf
- Pattern Electrode to Grid No.4 . . . . . 5 . . . . . μμf

Pattern:
- Type . . . . . See Illustration on next page
- Dimensions (Approx.) . . . . . 2-5/16" × 3-1/16"
- Calibration. . . . . Up to 500 lines

Focusing Method. . . . . Electrostatic
Deflection Method . . . . . Magnetic
Maximum Solid Deflection Angle . . . . . 40°
Overall Length . . . . . 12-7/16" + 1/4" − 7/16"
Greatest Diameter of Bulb. . . . . 5-1/16" max.
Caps (Two) . . . . . Recessed Small Ball
Mounting Position. . . . . Any
Base . . . . . Long-Shell Medium 6-Pin
- Basing Designation for BOTTOM VIEW . . . . . CBV
- Pin 1 – Heater
- Pin 2 – Grid No.2
- Pin 3 – Grid No.3
- Pin 4 – Grid No.1
- Pin 5 – Cathode
- Pin 6 – Heater
- End Cap – Pattern Electrode
- Side Cap – Grid No.4

Maximum Ratings, *Design-Center Values*:

PATTERN-ELECTRODE VOLTAGE.	1500 max.	volts
GRID-No.4 (COLLECTOR) VOLTAGE.	1500 max.	volts
GRID-No.3 (FOCUSING ELECTRODE) VOLTAGE .	600 max.	volts
GRID-No.2 (ACCELERATING ELECTRODE) VOLT.	1000 max.	volts
GRID-No.1 (CONTROL ELECTRODE) VOLTAGE:		
Negative Bias Value.	125 max.	volts
Positive Bias Value.	0 max.	volts
PEAK HEATER-CATHODE VOLTAGE:		
Heater negative with respect to cathode	125 max.	volts
Heater positive with respect to cathode	125 max.	volts

Typical Operation: †

Pattern-Electrode Voltage.	1000 . . .	volts
Grid-No.4 Voltage.	1050 . . .	volts
Grid-No.3 Voltage for Focus at 0.5 μamp Grid-No.4 Current*	300 approx.	volts
Grid-No.2 Voltage.	1000 . . .	volts
Grid-No.1 Voltage for Visual Cutoff on Monitors	−50 approx.	volts
Internal Resistance between Grid No.4 and Pattern Electrode	Greater than 1	meg.
Grid-No.4 Current.	0.5 . . .	μamp

†, *: See next page

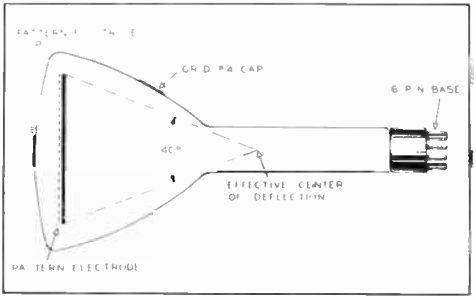

Figure 3.10B. Photo and details 2F21 monoscope tube. Photo Courtesy RCA.

nal on the air with remote signal on preview. In the Remote-to-Local position, the sense of the indicator corresponds to remote signal on the air and with local signal on preview. The sine-wave output to the sync generator is approximately 60 cycles, depending on the frequency of the remote sync.

3.10 *The Monoscope Camera*

The Monoscope is a camera which provides a test pattern signal for overall checking of equipment from camera control units to the video transmitter. This signal is often combined with the station call letters for transmission prior to the regular telecasting schedule. The RCA Type TK-1A Monoscope Camera is illustrated in Fig. 3.10A, along with the functional block diagram.

The front cover is removed in this photo. The large shield to the left contains the Monoscope tube, a 2F21, illustrated in Fig. 3.10B. The shield is of mumetal, and the magnetic deflecting coils are attached to it. The tube socket, anode, and signal leads may be disconnected and the entire assembly including tube, coils and shield may be swung outward for easy maintenance or tube replacement. It should be noted that the test pattern is printed on the signal plate of the tube. This test pattern is shown in Fig. 3.10C.

The test pattern is of the standard aspect ratio of 4 to 3, with the large circle having a diameter three-fourths the pattern width. This large circle and the four smaller circles provide a useful means of checking the scanning symmetry of the units through which the signal passes. The wedges within the circles are used for closely estimating the system resolution. The figures 20, 30, etc., located between these wedges indicate resolutions of 200 lines, 300 lines, etc. It should be noted that both vertical and horizontal wedges are used, so that both V and H resolution is checked. The actual testing procedures and pattern

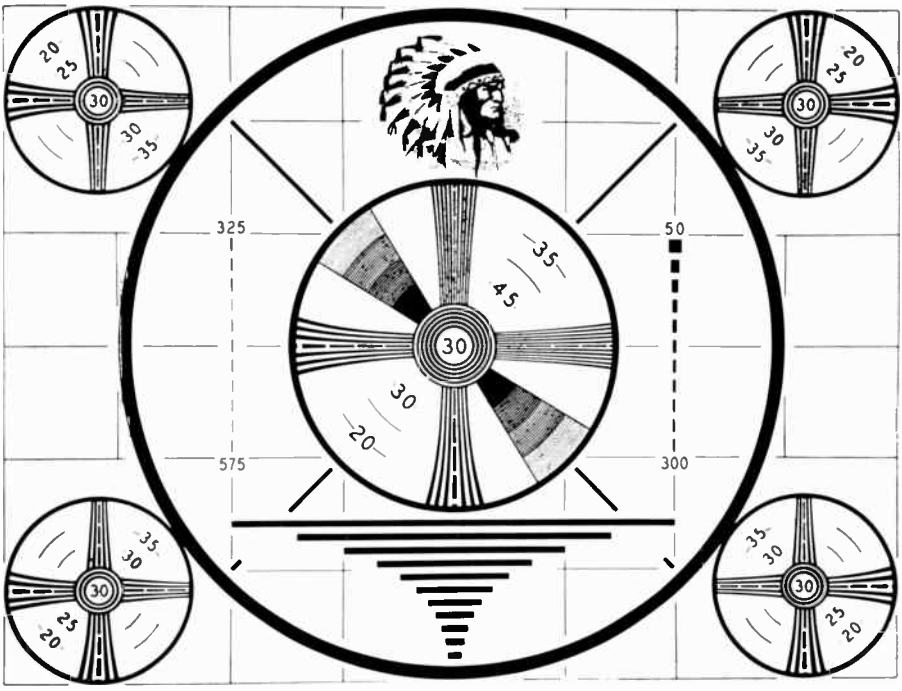

Figure 3.10C. Manascape camera test pattern. This pattern provides far checking harizantal and vertical scanning linearity, shading, cantrast, and brightness. Actual aperatirg interpretatians are discussed in Chapter 6. Caurtesy RCA.

image interpretation are covered in Chapter 6.

The functional block diagram of the monoscope camera is shown in Fig. 3.10A. The first of the 4 tubes in the vertical deflection generator amplifies the V driving signal from the sync generator and generates a sawtooth voltage wave. This sawtooth is amplified in the second stage. The third stage drives the vertical magnetic deflection coils of the test pattern tube. The fourth stage provides negative feedback for the purpose of improving scanning linearity.

The first stage in the 3 stage horizontal deflection generator amplifies the horizontal driving pulses from the sync generator and generates a sawtooth voltage at the H (line) frequency. The second and third stages amplify this sawtooth and drive the horizontal deflection coils of the monoscope tube. The blanking amplifier receives and amplifies the composite blanking pulses from the sync generator, and provides the proper level and polarity of these pulses to the video amplifier for proper mixing with the video signal of the test pattern.

The video amplifier uses six stages of video amplification, with a clipper stage between the fifth and sixth stages. The reason for the clipper is to provide adjustable clipping level to adjust the height of the blanking pedestals. The monoscope output signal is fed to the first stage of the video amplifier and amplified through the following chain of amplifiers. The blanking signal is inserted in the output of the fourth stage. The output of the fifth stage therefore contains both video and blanking, and the clipper stage is adjusted for the correct level of clipping of the blanking peaks. The sixth, or output stage consists of two tubes with grids tied in parallel, but separate plate circuits. This type of circuit provides two separate outputs, one connected to drive the

equipment to be tested, the other to drive a monitor.

It is noted from the photo that the tubes and main components are mounted on the front panel. All controls are grouped on a small control strip at the bottom of the chassis. In actual operation, the cover plate which fits in front is interlocked so that the high-voltage on the rectifier tube and circuits is removed upon removal of the cover.

3.11 *Slide Projectors and the Flying Spot Scanner*

Perhaps one of the most widely used facilities in the TV Control Room is the equipment concerned with telecasting of still subjects. Simple pictures and titles

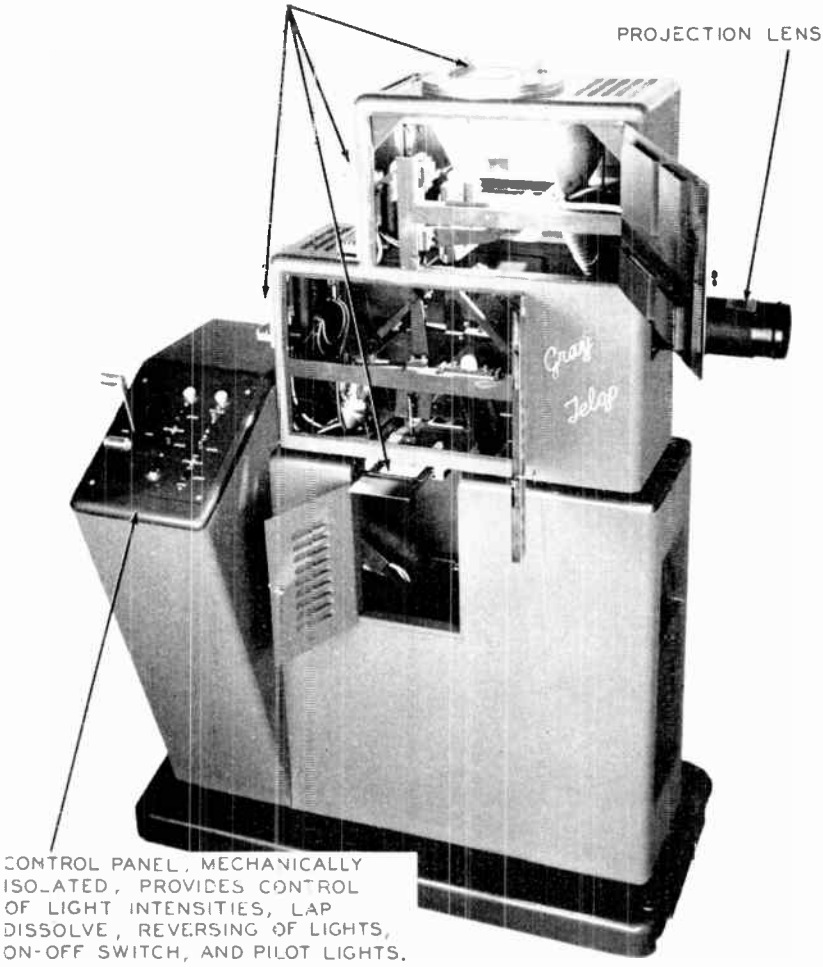

Figure 3.11A. Courtesy Gray Research and Development Company.

for announcements or commercials, test patterns, news photos, temperatures and time announcements, and station identifications, all are samples of the application of projecting still subjects.

It is becoming more and more popular in practice to use some means of reducing such subject matter to a slide, either a negative or actual glossy print, and a slide projector and camera system to transmit the subject. Such practice not only facilitates quick change of subject matter, but avoids tieing up a regular camera chain with awkward handling of large cards placed upon easels in the studio.

There are a number of ways slides may be telecast, some home-made and some commercial. One of the more popular commercial types of slide projectors is the Grey Telop, illustrated in Fig. 3.11A. This projector is used to focus the picture on a regular film camera in the film control room. As shown in the photo, there are four optical openings for opaque cards, photos, glass slides, art-work, transparencies, strip material, or even small objects of any type called for. Two of the optical openings are horizontal, two vertical. Slide holders may be used in any of these openings. The size of the transparencies, etc., are 3" by 4", and the object-to-image ratio is 1:1 when the camera is 33" from the projector lens as shown. In this way, as many as 20 subjects may be in readiness for any particular program or subsequent programs.

The control panel shown to the left provides versatile televising through lap dissolve, superimposing, fade-out and fade-in, or combining small objects or even moving news ticker-tape with slides. Fig. 3.11B illustrates an accessory unit which may be used to provide moving news ticker-tape with any small object such as the carton of breakfast food shown. This carton is mounted upon a turntable which may be rotated at the same time to display other objects related to the subject. Thus it is obvious that almost any combination desired may be achieved in such an arrangement, limited only by the producers imagination and application technique.

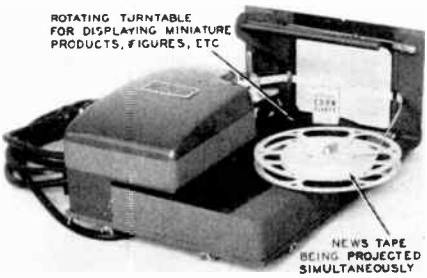

Figure 3.11B. Illustrating accessory unit used with Gray Telop to extend special effects. Courtesy Gray Research and Development Company.

Another increasingly popular means of televising slides is the *flying spot scanner*. This method utilizes only one unit in which the projection and camera action is combined. The unit gets its name from the principle of operation; i.e., a flying spot of light (rather than a beam of electrons) is made to move across (scan) the slide to be televised in the standard manner of scanning so that the light variations may be converted to corresponding electrical variations for the purpose of transmission. This spot of light is reflected (if a positive print is used) or is passed through (if a transparency is used) in varying degrees according to the light and shade or density of the object. The resulting light variations are then converted to similar electrical variations by means of a photocell.

How this is accomplished is shown by the functional block diagram of Fig. 3.11C. The kinescope tube is used here only as a source of generating the flying spot used to scan the object. The kinescope electron beam is first focused into a sharp spot of light on the phosphor of the face of the tube. The spot of light is then deflected by application of the regular H and V driving impulses from the sync generator usually supplied to the camera chain. The unit also supplies the blanking at the end of each line and each field so that retrace of the flying spot is cutoff. It should be noted that two mirrors are used, so placed that the raster

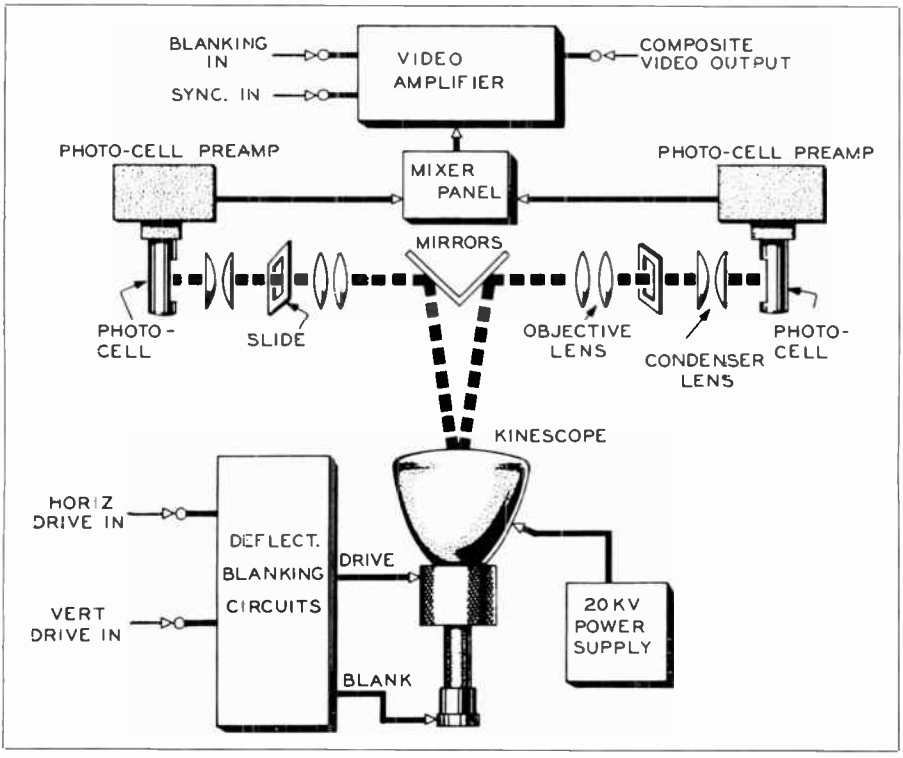

Figure 3.11C. Functional black diagram of typical flying spot camera.

is reflected into two separate assemblies. In this way two separate pictures may be scanned by one flying spot. Each assembly contains the necessary objective and condenser lens, between which the slide carriers are mounted. A photocell is mounted behind each slide carrier and their outputs feed a mixer circuit utilizing the same type of fader levers as described for mixer circuits in section 3.6. Thus switching may be provided in any of the required forms such as fading, lap-dissolving, superimposure, etc. The output of the mixer then feeds a video amplifier in which the composite blanking and sync pulses may be inserted for direct transmission to the transmitter.

Fig. 3.11D is a phantom sketch of the RCA Type TK-3A Flying Spot Camera, showing actual orientation of the components in the block diagram. The most often used electrical controls are placed upon the control and mixer panels. The slide changing and optical focus controls are on top, convenient to the operator. This particular camera uses a 5″ kinescope mounted in a vertical position as shown. Controls used in setup and in need of only occasional adjustment are on the video amplifier chassis which is "bath-tub" type, mounted on hinged rails in lower front of the table cabinet. Controls affecting centering and beam current are mounted on a narrow panel on top of this chassis, and are available through an opening in the front cover.

A camera of this type has a number of advantages. Studio or film cameras are not tied up for still projections, freeing them for other shows, rehearsals, or maintenance. The most severe limitation at the time of writing appears to be in the insufficient light output from the kinescope phosphor, which limits the size of the object to 2″ by 2″. This size

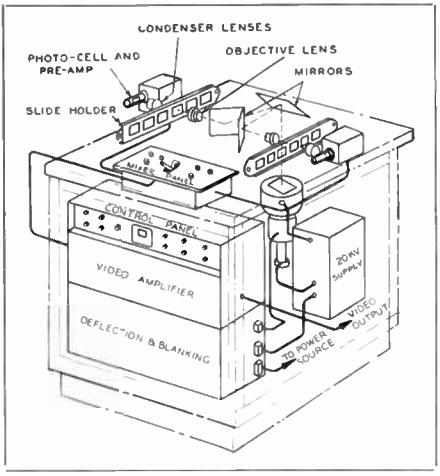

Figure 3.11D. Phantom sketch illustrating the location of major components and circuits elements of the RCA TK-3A flying spot camera. The heavy black lines denote circuit connections between stages. Courtesy RCA and Broadcast News.

picture or slide, however, is very satisfactorily transmitted in present setups.

3.12 *Special Effects Equipment*

"Special Effects" as applied to television is a broad and varied field. It may be recognized by the reader that some special effects have already been mentioned; lap-dissolving, superimposing of two separate pictures, blending of slides with actual objects, etc. In the means thus far employed, however, it was necessary to blend the "whole" of each object together as, for example, superimposing one picture over another. The special effects within the scope of the TV program, include not only the methods above, but also means of using any one part of any picture with varying outlines of the areas involved. Indeed the scope of special effects is limited only by the imagination and adaptability of the production and technical departments.

To meet the growing demands in the application of special effects, a variety of specialized equipment has been developed to derive unusual pictorial effects with the minimum of preparation and chances of operational error. Such special effects equipment will be described presently. First, let's explore the latitude provided in this application by slide projectors, mixer panels, and flying spot scanners.

The action of lap-dissolving, or the gradual fading out of one picture while another is faded in simultaneously, is so common that it is now considered a part of normal operational technique. Superimposing is done less often, as it should be, and is classed as a special effect although this is the most common effect produced by the mixer operator. Since the entire pictures are blended together, background must be watched carefully to avoid a hopeless hodge-podge in the final picture. A dark object which should predominate would be lost to view if the "mixed in" picture provided a dark background at that section of the raster. Such practice is only carried out after careful rehearsals with the entire crew.

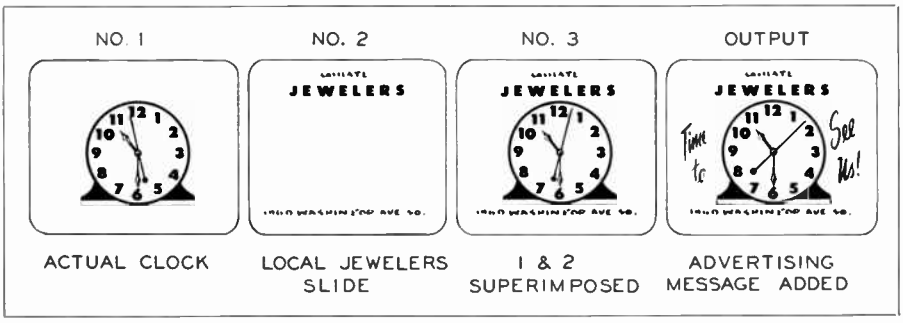

Figure 3.12A. How actual clock with moving sweep second hand, slide and advertising message may be combined in equipment such as Gray Telop.

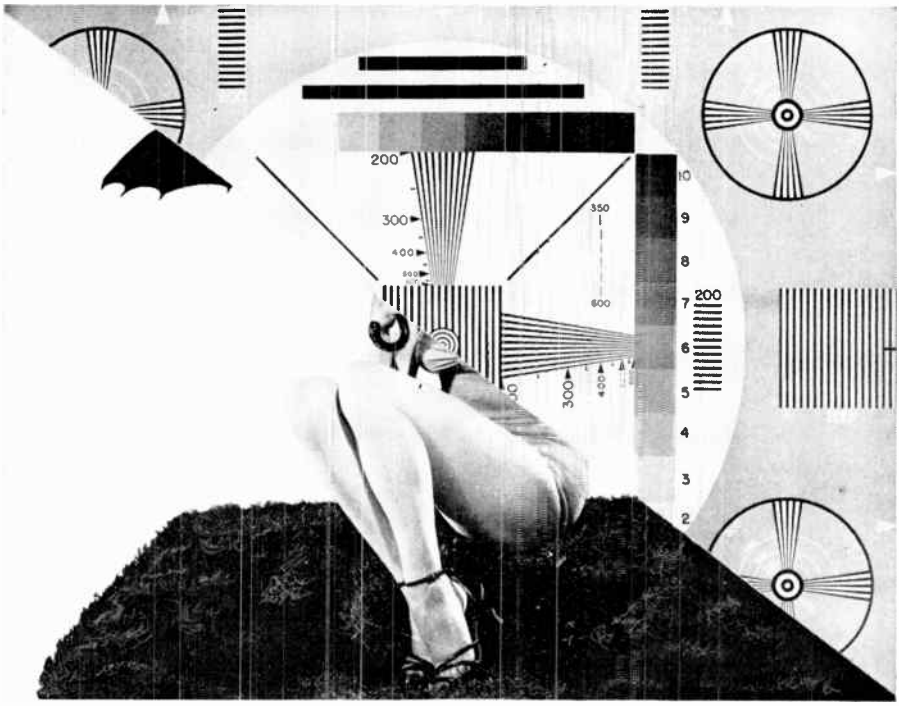

Figure 3.12B. (1) Angular wipe from bottom left to upper right, half completed.

Another special effect requiring only the normal equipment is the "night-time" scene which is often used. Normal lights may be used in the studio, while the camera control unit operator may adjust the target voltage so that the signal is "dark." One effect which has been used is providing one camera signal from the studio with an extra amplifier stage, to result in a "negative picture" at the receiver kinescope. Naturally such procedures are rare and the scope of operations are limited severely.

The use of such slide projectors as the Grey Telop, described in the previous section, for special effects, are common, and provide greater latitude in application. Fig. 3.12A illustrates one of a number of possible effects. An actual clock may be used with a sweep-second hand to show the exact time. The commercial slide, containing the sponsor's name and location, is mixed with the picture of the clock as shown in the figure. The sweep-second hand on the clock will be moving, and the sponsor's message may be stationary or changed at will by switching to other slides.

Another procedure which may be classed as a special effect is the action of "wiping" away one picture to be replaced by another. This technique is easy with such equipment as the flying spot scanner described above. Fig. 3.12B illustrates two unusual types of wiping away one picture with another one to be viewed. This is accomplished by inserting an opaque mask in the scanner (in place of the usual transparencies), which may be of fixed or variable area. The masking boundaries determine the boundaries between the two pictures. When wiping, the mask may be moved by hand in any direction desired, such as horizontally, vertically, or angularly as in (1) of Fig. 3.12B. The "pointed" wipe as in (2) of Fig. 3.12B is made by using a variable area opaque mask, or diaphragm. Such masking techniques may also be used to insert only a certain part

Figure 3.12B. (2) Pointed or "Wedge Wipe," three-fourths completed.

of one picture within a certain part of another picture. Operational techniques are covered in Chapter 6.

Equipment especially designed to achieve special effects in telecasting allow the most versatile use of optical and electrical combinations. Such equipment usually provides means for blanking out any one or more areas of a single picture, inserting another signal into these areas, and changing the separating boundary in any desired shape.

One system which was developed by RCA research engineers is shown in a simplified block diagram form in Fig. 3.12C. This system functions from the action of a keying signal which is dependent upon the shape of an optical mask, this signal being used to operate an electrical switching system which switches from one video signal to another. For convenience in discussing this method, we will assume a mask of the shape shown of a black background, with two vertical white stripes. It will be shown how the video signal selected depends upon whether the black or white areas are being scanned. A single line interval of time may now be traced. It should be noted here that the camera scanning the signal control mask may be either a regular studio camera, or a flying spot scanner. The latter facilitates the changing of the forms of the mask with less cumbersome dimensions of masking materials. When the flying spot scanner is used, the mask shown in Fig. 3.12C would have slits cut into the mask corresponding to the "white" portion. The spot of light would reach the photocell only through these slits.

Following closely the functional diagram of Fig. 3.12C, it is noted that a single line from the masking scanner consists of a black line (black positive polarity), a white peak, a black line, and another white peak, and a black line. This corresponds to the single line variation of the scanning signal as it sweeps across the mask. To eliminate any spuri-

ous noise levels, the signal is clipped in the following amplifier as shown, which allows squared-off tips for proper control. This clipping level is variable.

The resulting clipped signal from the amplifier-clipper is fed to a stage which yields two keying outputs of opposite polarity. One keying signal is fed to the video No. 1 switcher, the other keying signal goes to video No. 2 switcher. These switchers might be connected to two separate studio cameras viewing different objects. The switching (keying) signals are clamped during the blanking intervals as are the video signals also. In operation, the keying signals cut off one signal while the other is passed, and vice-versa. For example, if video No. 1 is passed during black scanning of the mask (or when the light spot is behind the mask in the flying spot scanner), video No. 2 is cut off. Then when white is being scanned (or the photocell receives light through the slit), video No. 1 is cut off and video No. 2 is passed.

The two composite signals are combined in a clipper stage which sets the black level of the picture. The signal is then amplified to the necessary transmission level and is set at proper polarity for feeding the studio system.

In this manner, the mask may either be moved or changed to provide a varying final "special-effects" picture. Interchange of the transmitted or blanked out portions of the two signals may be accomplished either by changing the input lines, or reversing the polarity of the switching signals at the polarity splitter. Obviously, the shape of the "white" or "black" portions of the mask will determine the shape of the boundary between the two pictures. This is illustrated in Fig. 3.12D, where the mask used is a black heart outlined on a white background and positioned as shown. The polarity of keying is such that No. 2 camera signal is passed on white, and No. 1 camera signal is passed on black.

The General Electric Company has developed an unusual special effects unit known as the Television Montage Amplifier. This unit is capable of keyed insertions between two video signals as in the method described above; keyed insertions of selected parts of one video signal into another video signal; and horizontal, vertical or wedge wipes by means of its own wipe control signal

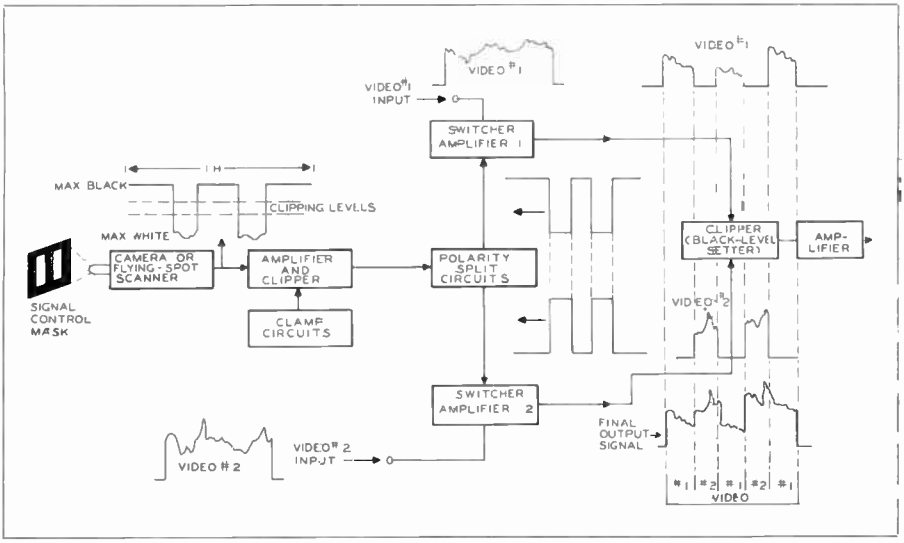

Figure 3.12C. Simplified functional block diagram of video special effects amplifier as developed by RCA. Waveforms show one line of video information.

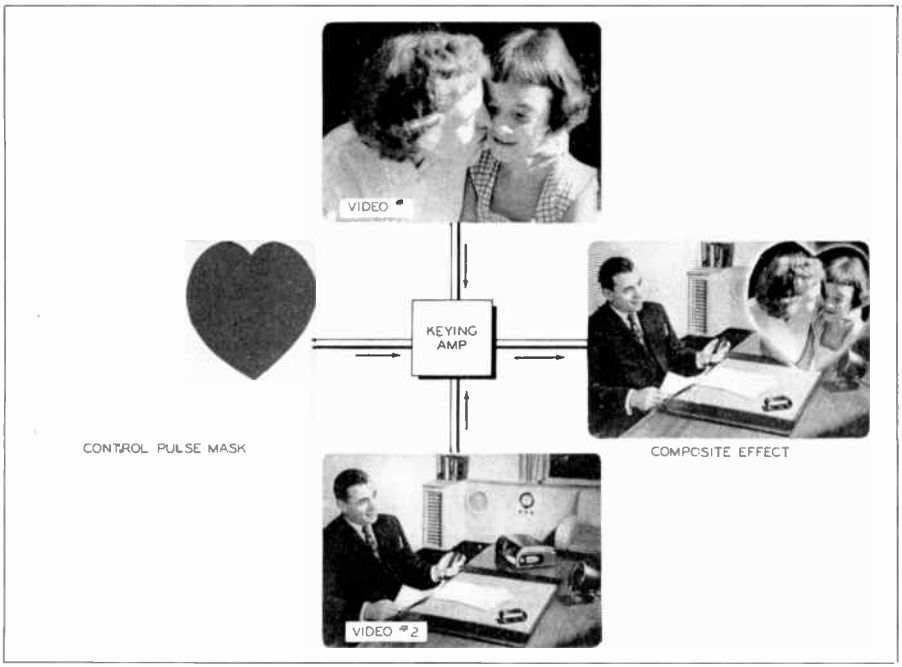

Figure 3.12D.

generators. Fig. 3.12E illustrates the Control Panel of this unit, and Fig. 3.12F shows the relative orientation of the special effects amplifier and control units in relation to a typical studio control room setup.

One very unusual feature of this unit is the fact that a *locating signal* from one of the montage amplifiers is combined with the drive signal fed to the cameras involved in the studio pickup, which produces on each camera viewfinder screen a bright line enclosing the area used in forming the final picture. In this way each camera operator is aware of the area of coverage being used, so that his operational technique may be well coordinated with the intent

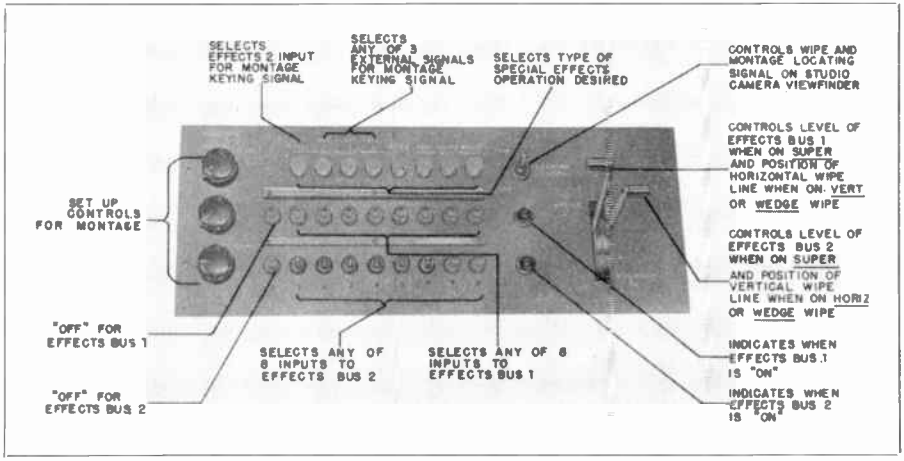

Figure 3.12E. G. E. type TC-34-A TV Broadcast Montage Amplifier control panel.

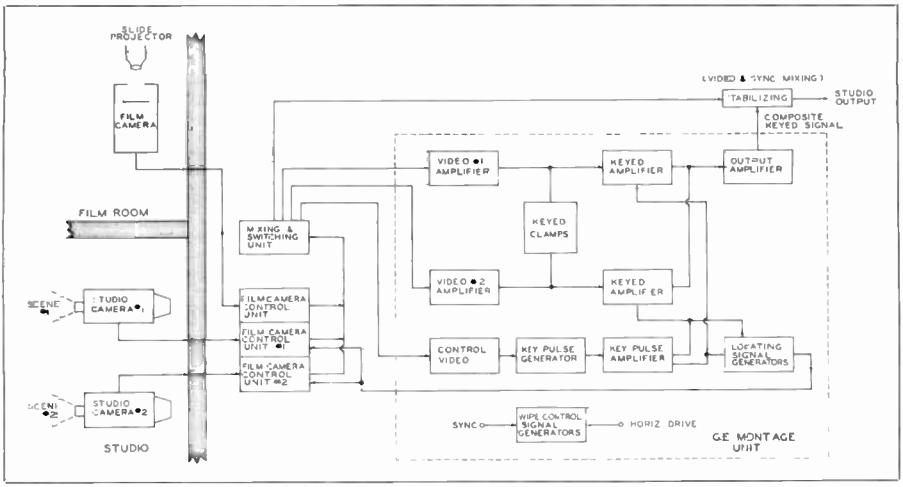

Figure 3.12F. Interconnection of Montage Amplifier with studio units.

of the effect. This locator signal is initiated in the "locating signal generator" (Fig. 3.12F), a 6BN6 stage normally operated so that the tube is conducting. The keying signals which are applied to the suppressor grids of the keyed mixers in the diagram are passed through a differentiating circuit and applied to the two control grids of this 6BN6. With the tube normally conducting, positive pulses thus applied have no operational effect, whereas negative pulses bias the tube below cut-off. From this action, a positive pulse appears in the plate circuit for each negative pulse applied to the grid. Since the differentiating circuit is driven from identical pulses of opposite polarity (since the amplifiers are keyed at opposite polarity) at least one grid of the 6BN6 will receive a negative pulse for each transition in keying signal. The net result is that a positive pulse appears in the plate circuit at the start and finish of the keying pulse of each line. These pulses fed through a cathode follower output stage to be mixed with the driving signals to the studio cameras, cause a continuous series of dots to intensity modulate the viewfinder kinescope outlining the keyed-in area. As shown in the block diagram of Fig. 3.12F, the locating signal is fed to the camera control unit so that proper mixing with the camera drive signals may be obtained.

The operator should become familiar with the terminology of special effects as obtained in commercial equipment of this type. *Keyed insertions* is the type of special effect shown by Fig. 3.12D. In this method, the keying control signal is obtained from a film camera and slide projector, a flying spot scanner, or a third studio camera. The flying spot scanner is rapidly becoming the favorite in this application, since any fixed or variable shape opaque shutter or diaphragm which will fit in place of the transparent slides may be used. This signal, fed to the control video amplifier produces the desired keying pulses for the insertion of one signal into any part of the other signal.

Combined montage is similar to keyed insertions with this difference: the keying signal for selection between channel 1 and 2 is the actual picture input to channel 2. This may be considered as a two signal, self-keyed insertion. The first key on the left in the upper row of pushbuttons (Fig. 3.12E) is depressed in this instance, which is the "self-key" button, connecting the video No. 2 signal into a clipper amplifier preceding the No. 2 video amplifier. (Not shown in block diagram.) On the original setup

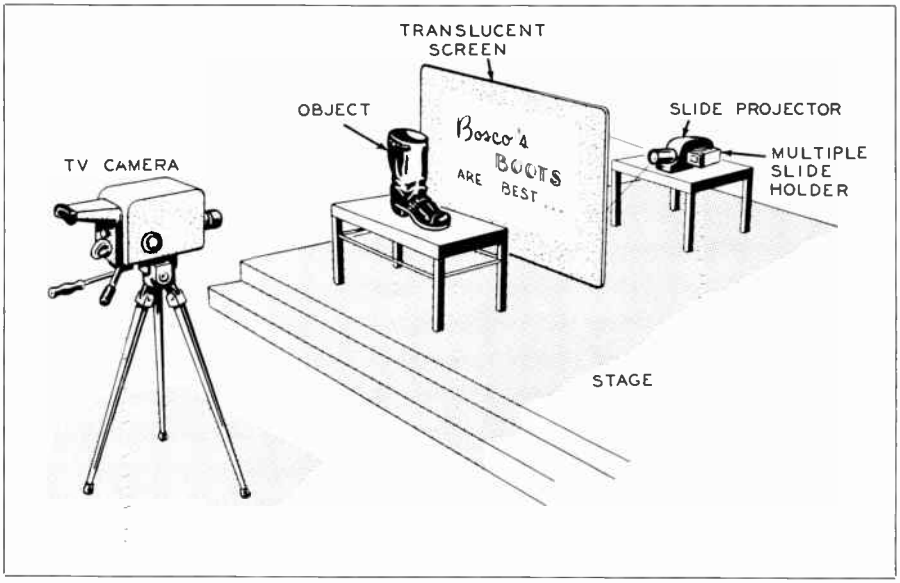

Figure 3.12G. (1) Method of backscreen projection to provide fixed or changing backgrounds for small objects. The slides may also contain sponsors messages.

of camera No. 2, the signal source is confined to a very low contrast range between white and a medium gray level. No source approaching black in content may be included. This amplifier then conducts for all signals in the medium gray to white region, and keys off at other times. By judicious choice of the two signal contents, a very effective montage is achieved. The original restricted contrast range of video No. 2 is restored in the clipper amplifier by clipping the signal, adjusting the gain so as to establish the medium *gray* level to transmitted *black* level, and white level to normal transmitted white level.

Stationary wipe technique is another popular method of producing an insertion of one picture into another picture. For example, if the "wiping" action of Fig. 3.12B were stopped as it is in our illustration, we would have an insertion of one picture into another. A popular usage of this effect in television shows is the scene of a person talking on the telephone in the lower left corner of the raster, and another picture of the person receiving the phone call in the upper right of the raster. Wipes, either moving or stationary, are produced in the GE Montage Amplifier by internally generated keying signals. The wipe control signal generators (Fig. 13.12F) are driven by the composite sync and horizontal driving pulses from the main sync generator. For horizontal wipes, camera H driving pulses trigger a sawtooth generator, and the DC level to which the sawtooth is restored is varied so that the instant the grid of the keying tube passes through the off to on transition is caused to vary linearly from one side of the picture to the other. The net effect is that of a DC restorer at the grid of a tube, the variable DC level being determined by the position of the control lever at the far right in Fig. 3.12E. For horizontal wipe operation, the pushbutton in the upper row marked "HORIZ WIPE" would be depressed. To produce wiping action to the right, the lever would be operated from up toward down position, and *vice-versa* for wipe to the left. Wipe action may be stopped at any point, in which case the two signals would occupy their respective positions in the composite picture. The word *SUPER* in the caption for this

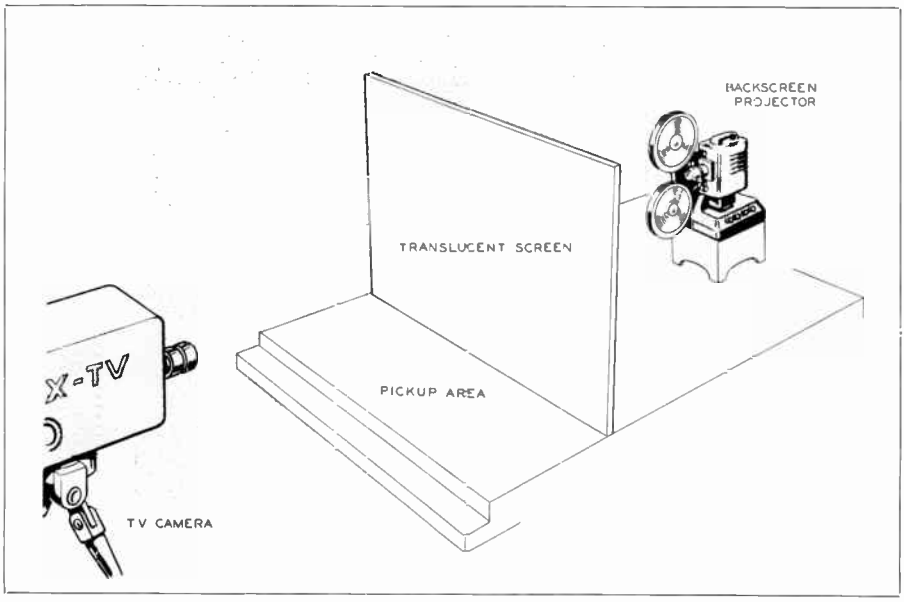

Figure 3.12G. (2) Method of backscreen projection to supply moving backgrounds for TV productions.

control refers to the superimposition pushbutton on the top row. The left lever is used for vertical wipes. The wedge wipe is actually a combination of both H and V wipes.

It should now be apparent to the reader that television is equipped to handle any conceivable type of special effect that could enhance a program, limited only by the imagination and resourcefulness of production and technical departments. Such effects were achieved in motion pictures only by complicated and time-consuming printing processes of the film.

Special effects also include back-projection of slides to provide a background for small objects or entire stage setups as illustrated in Fig. 3.12G(1) and (2). Outdoor scenes may be most conveniently simulated by this method. A translucent screen is used for the purpose, and sufficient projection light must be used to prevent the normal key lighting used in the studio for the subject from "washing out" the projected background. This technique for providing a variety of backgrounds is becoming very popular in practice. By proper control of front lighting and the use of the ultra sensitive 5820 type orthicon, very satisfactory results are obtained.

Also popular in the larger stations such as the key network studios is the use of backscreen motion picture projection. As might be expected, the primary problem is properly synchronizing the projected pictures with the TV camera. At first thought, it might appear that a regular 2-3-2-3 television projector throwing the picture on the screen would be usable. While it is true that this technique is compatible with the studio camera (section 1.11), it has been found in practice that the available illumination on the screen is far below allowable limits. The projector for backscreen projection must be about 18 feet behind a 9x12 foot screen to fill the picture area, as compared to about 40 inches when used with the TV camera.

This problem was solved by using the rapid pull-down 2-3-2-3 type of "intermittent" (described in following section on the TV Film Chain), both a high-intensity carbon-arc and incandescent projection lamp, and a special type of shutter. The major difference, therefore, in

a backscreen projector for studio backgrounds and the regular TV projector for the iconoscope film camera is in the type of projection lens used and the much higher intensity projection lamps.

3.13 *The TV Film Chain*

The film department is an overworked division at most TV installations today. Film consisting of regular features, news reels, commercials, and special effects are a major source for the television program department. The adaptability and split-second timing of films may easily provide the incentive to keep a large portion of TV programs on the film chain. Certainly this system provides an easy way to "edit out" and re-do any bad fluffs or embarrassing mistakes on programs to be distributed throughout the country.

The fundamental problems of telecasting film and the basic methods of meeting them were outlined in section 1.11 of Chapter One. It is advisable to review this section at this time. Fig. 3.13 shows the fundamental properties of a film projector.

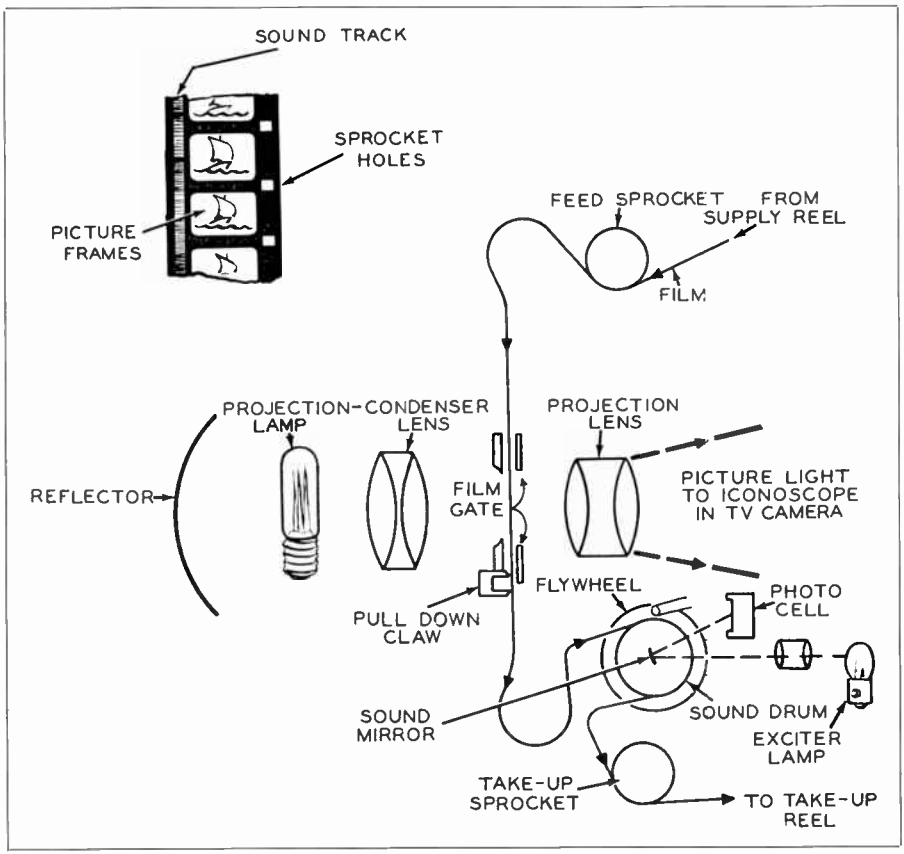

Figure 3.13. 16mm sound film is 0.630″ wide by about 0.006″ thick. The base is acetate and is non-inflammable. Picture frame is 0.294″ high by 0.410″ wide, each picture being separated from the next by a 0.006″ opaque line, 40 frames to the foot. While the picture frame is pulled down intermittently and allowed to rest at the gate momentarily, the sound track is caused to roll steadily over the sound drum and photo-cell assembly. The sound track with audio for the corresponding picture frame is 26 frames ahead. The exciter lamp supplies light to the photo-cell through the sound track, thus the photo-cell receives fluctuations of light according to the density of the recorded sound on the track. The photo-cell thus feeds the audio preamp. The picture projection lens places the image upon the iconoscope tube mosaic which is in the camera about 40″ from the projection lens.

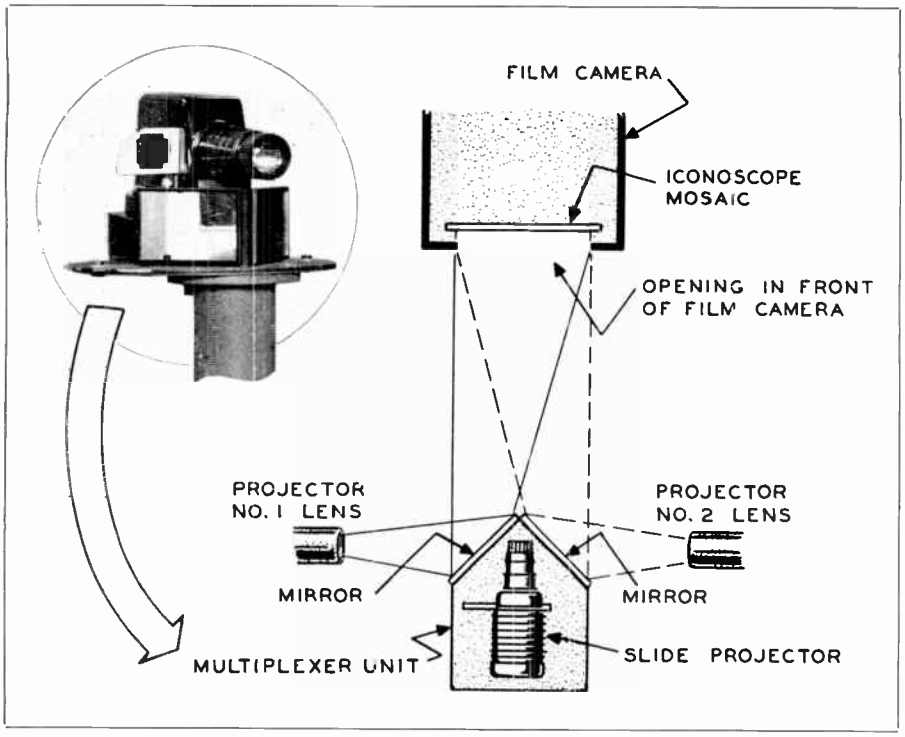

Figure 3.13A. Multiplexes unit permits use of 2 film projectors and one slide projector with only one film camera unit. Photo Courtesy of RCA.

In practice, one camera, consisting (usually) of an iconoscope pickup tube with its associated sweep circuits and amplifiers, serves *two* film projectors. This is accomplished by means of a *multiplexer*, illustrated and diagrammed in Fig. 3.13A. The unit shown is an image-reflecting device (two-mirrors) fitted with a standard slide projector. Images are thus picked up from the slide projector or from either film projector without movement of any unit involved. The slide projector is mounted above the two mirrors as shown, the mirrors being mounted at the required angles to properly reflect the image from either projector to the film camera unit. A typical projector and film camera is illustrated in section 1.11, Chapter One.

This arrangement is common in all installations using two or more projectors. The operator in the projection control room may select at will the picture from any of the projection units. Such a method facilitates easy changing from one projector to another during a continuous program when one projector cannot hold enough footage of film for the entire show. The slide projector is often used for station identification or any type of stills.

There are several major differences in film projectors for television than those used for theater application. Firstly, in order to successfully employ the 2-3-2-3 scanning sequence, the pull-down time (time the projector takes to pull the next frame into place) must be shorter than the theater type. Secondly, the projection lens is comparatively close to the pickup camera, being in the neighborhood of 40 inches. Thus the optical system is used to correctly size and focus the picture upon the Iconoscope mosaic.

As already discussed (section 1.11), there are two methods of providing light

flashes to the film; the shutter method and the "pulsed-light" system. In general, it may be found in practice that the 16mm projector uses the shutter, while the 35mm projector uses the pulsed-light. At the present time, the 16mm is more commonly used due mainly to the more rigid safety and fire codes prevailing for booths containing 35mm equipment. The 16mm film is on a safety base, whereas 35mm film is not on a safety base since such is not economically feasible. The 35mm type, however, provides slightly better resolution and picture fidelity.

The time relationship of the pull-down, light, and scanning sequences as compared to standard theater projection is shown in Fig. 3.13B. Following closely this diagram, it is noted that the pull-down in the standard projector is about one-sixth of the total frame-cycle. The next line down shows how the TV projector pull-down time is decreased so that this interval is only about one-eighth of the total frame-cycle. If the standard pull-down interval were used for telecasting, alternate pull-downs would slightly overlap the light flash cycles causing an effect termed "travel-ghosts." Thus the claw mechanism which pulls down on the film is slightly speeded up for TV use. The next line down in Fig. 3.13B shows the approximate intervals of the light flashes allowed by the shutter to reach the film. It is noted here that frame 1 is illuminated twice, frame 2 three times, frame 3 twice, etc. The next line down indicates the scanning intervals, which occur during the *unlighted* intervals following each burst of illumination. The mosaic of the iconoscope "stores" the signal voltage during the interval between light bursts. The scanning process then transforms the stored voltage variations to corresponding electrical variations which are applied to the preamplifier in the film camera.

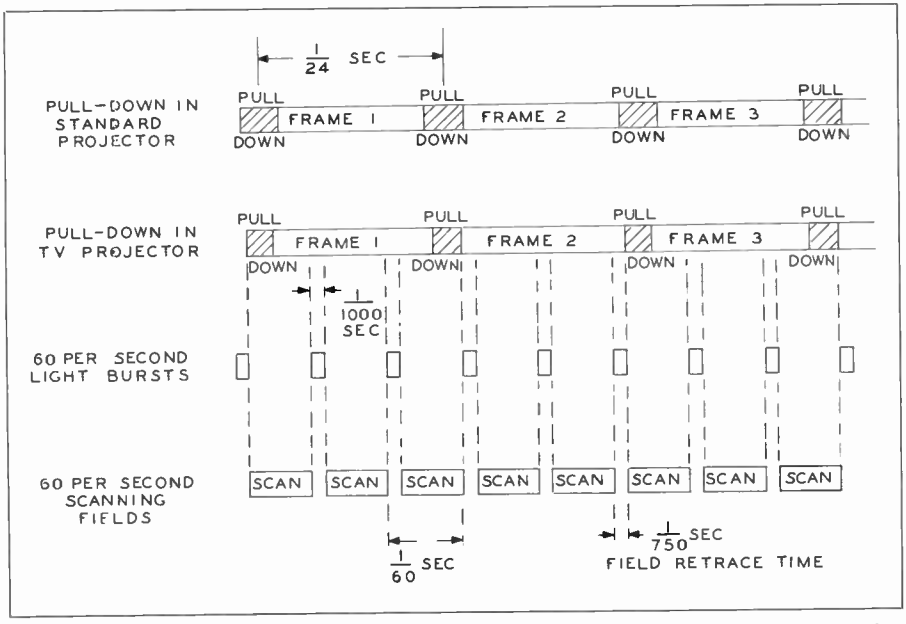

Figure 3.13B. Framing, light and scanning time sequences to adapt 24 frame per sound standard film projection to 30 frame per second TV standards. The shortened pull-down time prevents light flashes from reaching the film during the pull-down interval. Scanning during the pull-down in this sequence is allowable since light does not reach film at that time. Light flashes occur during vertical blanking interval.

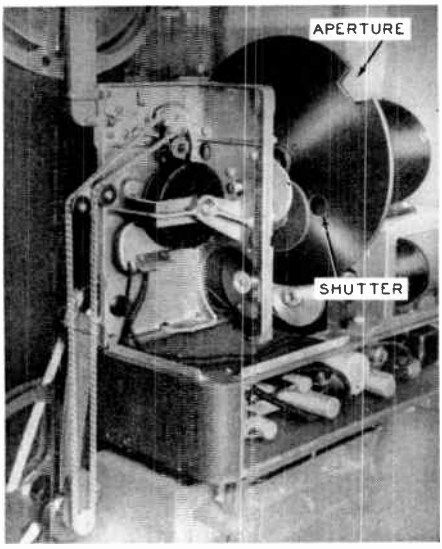

Figure 3.13C. Shutter and shutter drive mechanism in RCA 16mm TV projector type TP-16A.

In this system, the 60 light flashes required every second (for a duration of one-thousandth second) are supplied by a shutter which is driven by a synchronous motor. Thus this motor must be supplied with power from the same power source as the main sync generator, or a "remote sync-phasing" unit (section 3.9) must be used. In practice, the motor usually employs a separately excited DC field. Since such a field is polarized (direct-current) the motor will always "lock-in" to proper phase relationship with the sync generator when once adjusted. Phasing procedures are described in Chapter 6.

Types of shutters vary slightly in practice. Fig. 3.13C illustrates the rotary shutter used in the RCA TP-16A projector. This is an 18 inch metal disc with a slot cut in its periphery as shown. This shutter is driven at a speed of 3600 rpm by the motor. This provides the proper interval of light bursts and rate of repetition. The location of the disc is such that the cross-section of the light beam from the projection lamp is small compared to the size of the shutter opening, resulting in quick opening and closing times. The Du Mont 16mm projector (made by the Holmes Projector Co.) uses dual shutters having a single aperture each. The rear shutter is between the condenser lens system and the film, while the front shutter is located ahead of the projection lens. The apertures of the shutters are aligned together and with both revolving in the same direction, the projection lens creates a light burst projected onto the iconoscope mosaic which is cut off simultaneously from top and bottom to the center of the aperture. In the General Electric television projectors, both the 16mm and 35mm types are pulsed-light systems.

The pulsed-light method commonly used on all 35mm TV projectors will now be described in more detail. The action of the mechanical shutter is eliminated by using a pulsed-light instead of a steady light broken by shutter action. The pulses must be supplied by a pulse power supply which is driven from the main synchronizing generator, thus complicating somewhat the overall circuitry for the projector. The pulsed projection lamp is of the gaseous type to allow brilliant bursts of light for the extremely short duration of 1/1200 second, or about 830 micro-seconds. The duration and shape of the pulses supplied are under control in the associated power supply and pulse forming unit.

Fig. 3.13D is a photo and diagram of the RCA Type TP-35B television film projector. The gas-filled discharge tube is driven from the pulsed power supply synchronized from the main sync generator. This power supply is rack mounted, as is the exciter lamp supply for the audio track. Controls on the projector and at the rack provide starting and stopping at either location. "Dousing" and "undousing" operations upon changeover between projectors is accomplished by electrically operated relays in the RCA system. The operator is provided with a picture monitor which provides for check on quality and cues for switching. When the first cue-marks appear at upper right of picture (described under Operations in Chapter 6), the operator pushes a button to start the

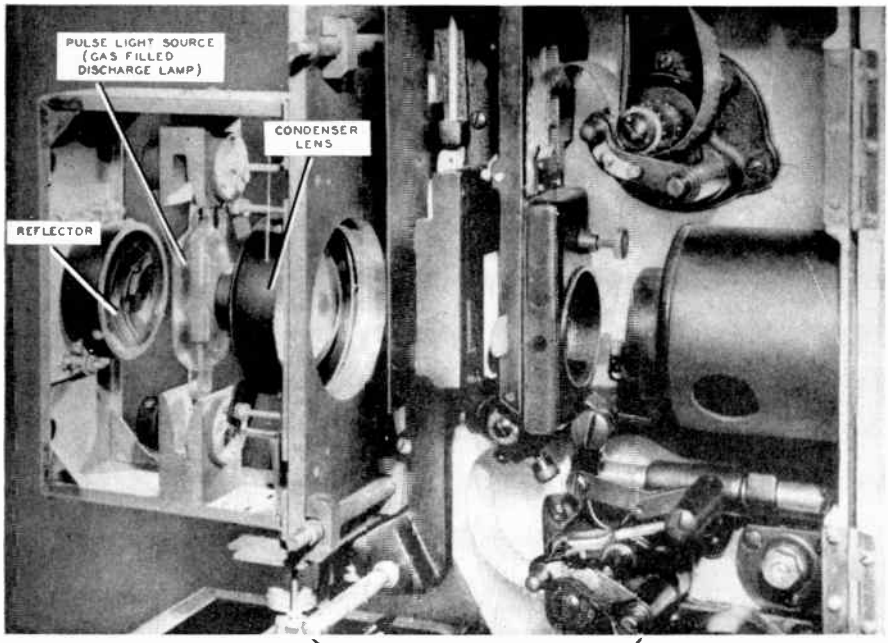

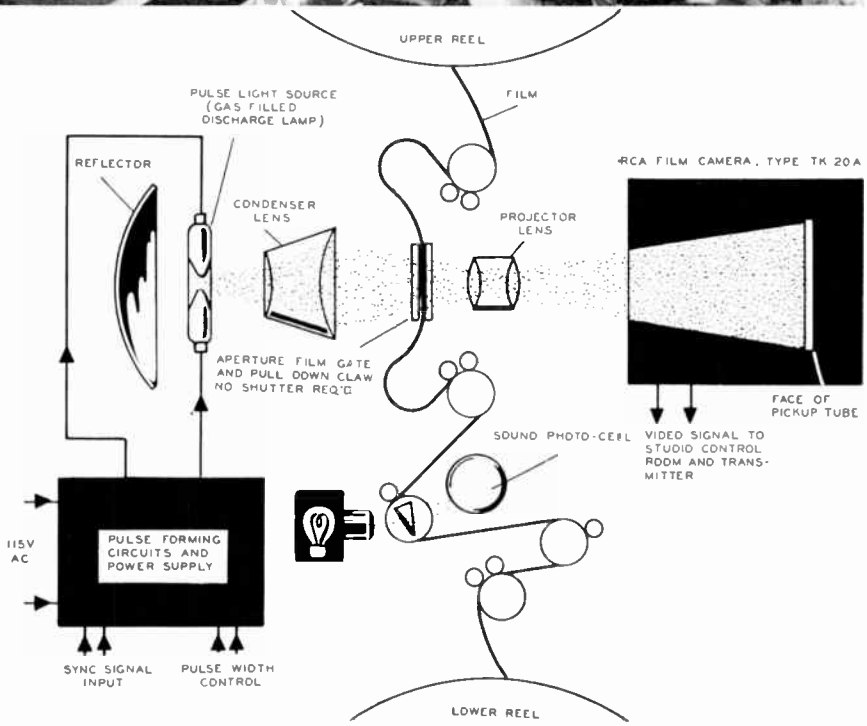

Figure 3.13D. Pulse-lighting and film gate system of RCA 35mm Television projector.

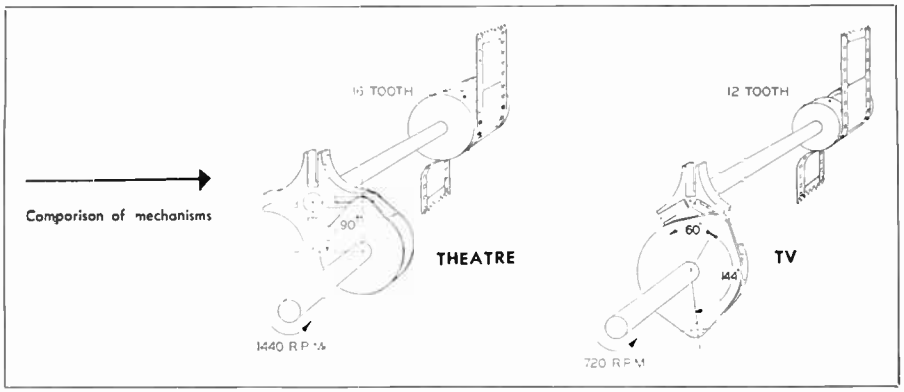

Figure 3.13E. Special type of intermittent used in RCA type TP-35B television film projector as compared to standard projectors used in the theatre. This is a three-sided geneva movement which, driven by a synchronous motor, pulls the film down at unequal time intervals. Alternate frames stay in place at the film gate 1/10 second longer than the preceding and succeeding frame. This, together with speedy pulldown allows the 830 microsecond light pulses (at 60 times per second) to flash twice through the first frame, three times through the second, twice through the third, three times through the fourth, etc. Scanning in the pickup tube of the film camera is synchronized to follow the rate of the light pulses, beginning immediately upon the cessation of each light flash, and continuing during the unlighted intervals. Courtesy RCA.

motor on the second projector. Upon the appearance of the second set of cue-marks, the operator pushes a single button which switches both picture and sound to the second projector, and "douses" the first projector. The type of "intermittent," or movement used to operate the pull-down claw for the RCA projector as compared to the conventional theater projector is shown in Fig. 3.13E.

The General Electric pulsed-light system is known as "Synchro-Lite" projection. In this unit, the pulse power supply, as well as the exciter lamp supply and photo-cell (audio) amplifier are located in the base of the projector. This particular projector is unusual in that it also employs a small mechanical shutter on the projection lamp which is used to further reduce flicker. The complete description follows.*

The standard sound motion picture film with 24 frames per second must be converted to the 30 frames per second TV standard. As a further requirement, it is desirable to illuminate only during the vertical blanking period of the TV signal and the film must be stationary in the gate at this time. The vertical blanking is set at 5 to 8% of 1/60 of a second so the illumination time cannot exceed 5% of 1/60 of a second or 830 microseconds. In this projector, when used for standard 16mm motion picture sound film, 24 frames per second are transported intermittently past the aperture. The illumination is supplied by an arc lamp with a mechanical shutter which interrupts the light beam 72 times per second or three illuminations per frame to reduce flicker. The TV system with its 60 fields per second has 2.5 times the 24 frame motion picture rate. In practice, this ½ frame differential is taken care of by illuminating one frame three times and the next one twice. This imposes restrictions on the maximum pull down time of 7 milli-seconds. Fortunately, there are standard 16mm projectors that have better than 7 milli-seconds pull down so that if the projector mechanism is synchronized with the vertical pulse from the sync generator, no special intermittent, such as required for 35 mm projectors, is needed.

The illumination of the film must be timed to synchronize with the TV sync

*ctsy General Electric Co.

generator. This can be accomplished either by using a rotating shutter to interrupt a continuous light source such as an arc or incandescent projection lamp or by illuminating the film from a pulsed light source timed from the sync generator. Synchro-Lite is the General Electric designation for the pulsed light source used in this projector.

High intensity illumination is required to obtain satisfactory reproduction with present film pickup tubes. The short light pulse (830 micro-sec.) for TV is only ⅛ as long as the 50% pulse in a conventional motion picture projector so the light output must be very high to give adequate intensity through a dense film onto the camera tube mosaic. The Synchro-Lite gives this high intensity illumination without requiring either excessive power or forced cooling.

The audio system should reproduce all that is available on high quality film. The requirements for broadcast audio quality are much more stringent than for a 16mm motion picture projector so that special steps need to be taken to reduce hum and microphonics and to equalize the frequency response.

The Synchro-Lite uses a Krypton filled flash tube Type FT-230 made by the General Electric Lamp Department. The arc strikes between the tips of the two tungsten alloy tips and requires about 6000 to 7000 volts to break down the gap. The flash tube is filled with Krypton gas at a pressure of two atmospheres which gives a bluish-white light pulse.

The operation of the FT-230 to provide a satisfactory pulsed light resolves itself into three functions:

1. The gas between the electrodes is ionized.
2. Energy for the light pulse is supplied to the lamp.
3. The light pulse is cut off at the proper time.

The vertical synchronizing pulse from the sync generator is fed through a buffer amplifier and used to trigger a multivibrator which in turn fires a blocking oscillator and Thyraton. A RC circuit in the grid of the pulse amplifier tube is used to filter sharp spikes from the sync lines and to make the circuit insensitive to disturbance on the sync line such as might be caused by power line hash in the ground system. The pulse developed by the blocking oscillator is used to drive a 715B high voltage pulser tube. High voltage for this pulser is supplied by a conventional half-wave rectifier. The output of the 715B is an oscillatory wave having a peak-to-peak value of 15,000 volts with a 1 micro-second period. This voltage appears across the gap of the lamp and performs the first function of ionizing the gas.

A much lower voltage at high current is required to maintain the arc in the FT-230 during the light impulse and this is provided by a three phase selenium rectifier with an output of approximately 135 volts at approximately 2 amperes in conjunction with two resonant circuits. This resonant charging circuit charges the capacitors to a peak of 600 volts just before the high voltage pulse is applied to the lamp. This charging circuit operates in conjunction with a resonant discharge circuit consisting of an inductance, capacitance, the FT-230, and the Thyraton. The duration of the flash and the shape of the light pulse is controlled by this resonant discharge circuit which is so designed that the light pulse will be 4½ to 5% of the 1/60 of a second field rate. This insures that the light pulse will be equal to or less than the lower limit of the vertical blanking period.

The Thrytron carries the full flash lamp current and acts as a diode to cut off the light pulse during the negative swing of the resonant discharge cycle. The peak current through the lamp is approximately 70 amperes and the light pulse is a half sine wave which reduces the transient generated in the camera pickup tube over that from a rectangular light pulse. The unit is fully enclosed with safety interlocks for protection of personnel and with the necessary power switches on the front panel. No adjustable controls other than these power switches to control the high voltage and low voltage power supplies are required.

From an operating standpoint, the Synchro-Lite permits stopping a single frame in the gate, illuminated at full intensity without danger of burning or blistering the film. This permits a channel to be readied for switching on the line with shading, back light, and level adjustments preset and gives the program director a clear image for preview of his available channel.

Continuity of program is assured since the FT-230 flash lamp does not burn out suddenly like an incandescent lamp but gradually burns away the electrodes and darkens the bulb so that the end of life is caused by a reduction of the light output after 50 to 75 hours.

The optical system, except for the projection lens, consists of a separate lamphouse with provision for precision mounting and control for the flash lamp, reflector, and condensing lens system.

The condensing lens system is designed to uniformly illuminate the film in the aperture and is so designed with its reflector mirror to eliminate any flicker in the projected picture from arc wander in the flash tube. This is done by allowing sufficient overlap of the aperture by the light beam and by properly positioning the reflected image with respect to the direct image. Both rotation and elevation of the flash lamp is provided to properly position the light source with respect to the optical system. The projection lens itself, completes the optical system. It consists of a 3" f2 Bell and Howell "In-crelite" coated lens which projects the correct size picture at a distance of 40" from the projection lens.

The projector head itself is a specially modified Bell and Howell Filmoarc projector with a standard double-claw type intermittent with a pull down time of 4.6 milli-seconds. The intermittent movement is driven by a 1800 rpm, 1/75 h.p. synchronous motor. Since no mechanical shutter is required, the drive motor can be small and consequently, the starting and stopping time is greatly reduced since there are no heavy elements to add inertia to the system. A starting time of 3 seconds and a stopping time of 2 seconds is thus attained. A separate take-up mechanism and motor are included which are also used to provide rewind facilities. Synchronization of the intermittent movement of the film with the TV sync generator is assured since the synchronous motor drive and the TV sync generator are both locked to the power system. Phasing the projector is accomplished by mechanically changing the position between the motor shaft and the intermittent drive shaft with a set-screw coupling. Once the projector is properly phased with the sync generator and other projectors in the same system, there is no need for further adjustment. Since the Synchro-Lite properly times the light pulse with the sync generator, no DC field on the driving motor is required and the projector will always come up with the proper phase. Complete freedom from the power line frequency can be obtained by synchronizing the projector driving motor directly from the sync generator. This will eliminate any projector phasing requirement and will permit the station sync generator to be phased with remote or network signal to meet the suggested RTMA recommendation concerning continuity of vertical synchronization. A framing device is provided in the projector head to permit exact placement of the film frame in the aperture. 4000' reel arms are provided with the projector so that up to 110 minutes of continuous film can be provided with a single projector. The intermittent movement and driving mechanism is designed for 1000 hr. life and requires only routine cleaning and oiling for maintenance.

The sound system consists of a conventional exciter lamp, lens, slit, with a photo-cell pickup. The exciter lamp filament is lighted by high frequency (50 KC) supply to eliminate AC hum and a light shield is provided to exclude extraneous light from the room from entering the photo-cell. After the film leaves the picture aperture, the intermittent motion is largely removed by a continuously moving second sprocket and a

third continuously moving sprocket which draws the film at a constant speed from the sound aperture. Vibration removing or damping devices are used consisting of a weighted rotating flywheel rigidly mounted to the shaft of the roller which carries the film past the sound aperture. This is called the sound filter. In addition, a device called an oscillatory stabilizer is used to neutralize irregularities in the rate of film travel by transmitting a forward motion of the film on the take-up side of the sound aperture back to the portion of the film that has not yet reached the sound aperture as a backward impulse. This acts so that any change from a constant rate in the travel of the film is made to neutralize itself. Finally, a constant tension take-up mechanism provides a steadily increasing torque as the wheel becomes loaded with the film and protects against vibration and jerks inherent in a take-up driven by a spring belt with a slip clutch to adjust for differences due to changes in the amount of film on the take-up reel.

The audio system starts with the photo electric cell type 918 which along with a preamplifier makes up the sound head for the projectors. Since the photocell is a low level, high impedance device, the location of the amplifier next to the phototube greatly reduces hum and noise pickup and provides a high level lower impedance signal which can be passed through a cable to the amplifier in the projector base. A 2 tube amplifier is used with a self-contained power supply and an equalization network to compensate for the film sound track deficiencies. The amplifier itself has a frequency response within 1½ db between 50 and 10,000 cycles and a noise level 60 db below —20 dbm which is the normal output signal level fed from the unit into a 600/150 ohm line.

The equalization provided will give the system a flat response from 80 to 6000 cycles from a standard multifrequency test film. Old noisy film may dictate a somewhat reduced frequency range which can be obtained by controls in the equalization network.

The system noise level is made up principally of the random noise from the photocell and 1st amplifier and microphonics from the projector mechanism. With the projector stopped and a 25% neutral filter in the gate, the noise level is 55 db and with the projector running, the total signal to noise ratio is 50 db.

At this time it is well to point out that the exciter lamp which supplies light to the photo cell is never excited by DC or the usual power frequencies in AC. These lamps are powered by a supersonic frequency, varying in manufacture between 28KC and 80KC. The oscillator which supplies this power for the exciter lamp is usually found on the preamplifier chassis for the audio system. This procedure has been found most satisfactory to eliminate hum and noise from being introduced into the system by the exciter lamp.

The television film camera consists basically of an iconoscope pickup tube with its associated back and rim lights, video preamplifier, iconoscope blanking and sweep amplifiers, and usually a protective device which removes the high voltage in case of sweep failure. The audio output from the film projector is fed directly to the film chain control unit or audio console mixer-amplifier.

Fig. 3.13F illustrates a typical film camera with top cover removed to show mounting of the pickup tube. Fig. 3.13G illustrates the film pickup control console for use in adjusting and operating the entire film chain.

The camera always incorporates a video output polarity switch which allows use of either negative or positive film in the television projector. Thus if it is necessary to telecast filmed events within a very short time after the initial filming, negative film may be used. (Section 3.14 to follow.)

Immediately below the control panel of Fig. 3.13G are the "screw-driver adjustments" such as sweep linearity, iconoscope blanking width, keystone correction signal amplitude, etc. These are not ordinarily adjusted during program transmission, being set up during rehearsals or pre-air warmups of equip-

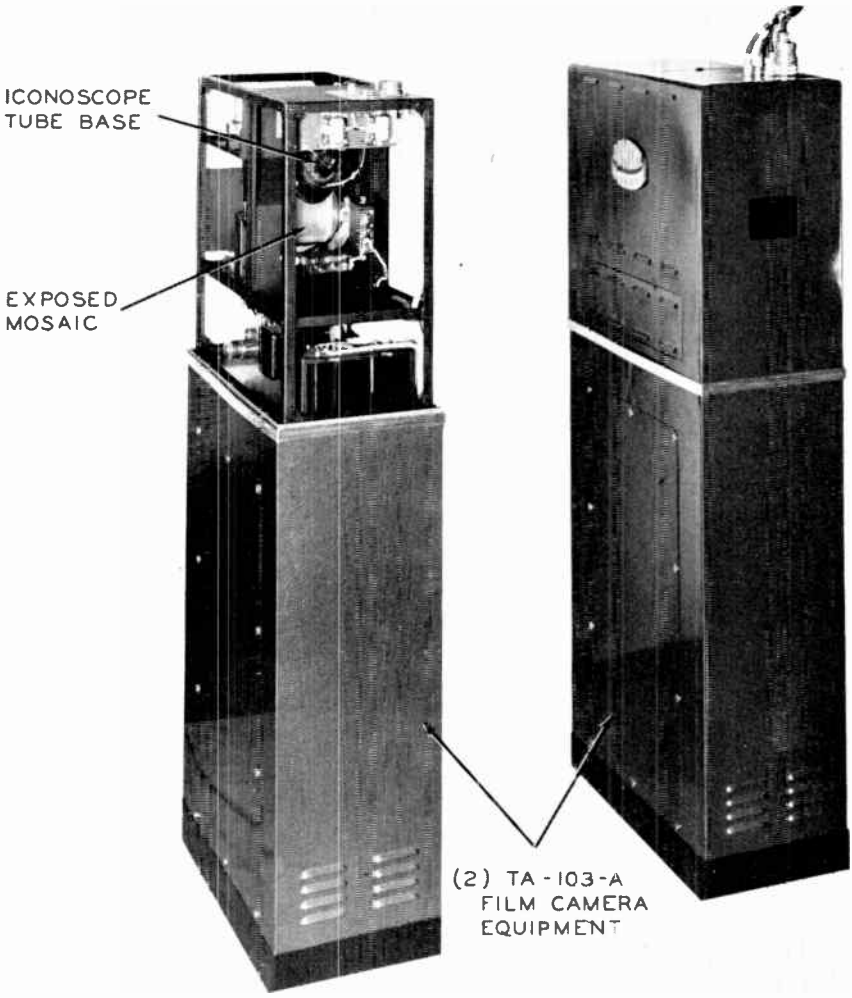

Figure 3.13F. DuMont TA-103-A film camera equipment. Courtesy DuMont.

ment. The normal operating controls which may be seen on the panel are iconoscope sweep amplitude (vertical and horizontal), sweep centering (positioning), focus and intensity controls; the rim light and back light brightness controls; and the shading controls.

It is observed that both picture monitors and waveform monitors are used as in the regular studio camera control unit. On the unit shown, multiple inputs on the waveform monitors enable the operator to use them for test scopes and level indicators for external video signals as well as normal operation. The picture monitor may also be used as a preview monitor so that the picture inputs can be observed before switching to the program channel. Video amplifiers and sync insertion circuits are contained in rack mounts. A clamp circuit is used to improve low-frequency performance, and minimizes the need for a great amount of vertical shading.

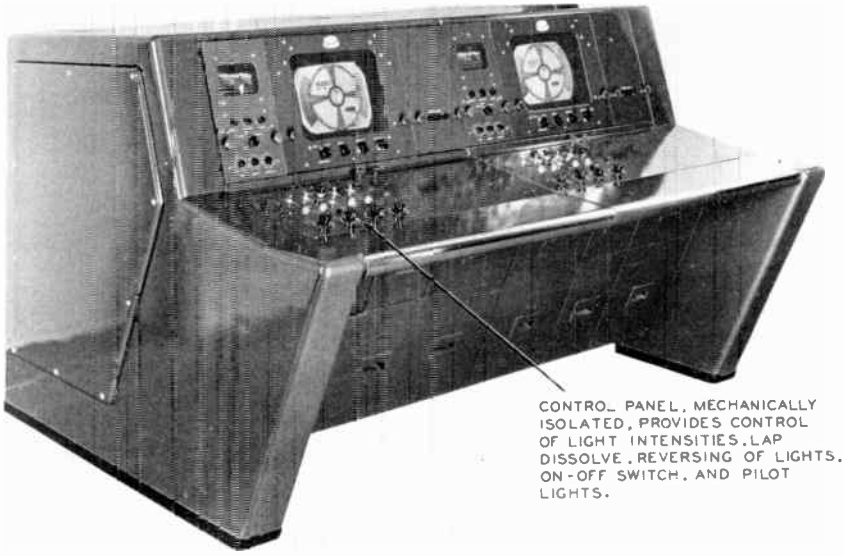

Figure 3.13G. DuMont TA-105-A Film pickup control console. Courtesy DuMont.

This film control equipment as well as many other models of film controls provides an automatic, electronically controlled fading and lap-dissolving arrangement, as well as "manual" control of these functions. The automatic system is quite common on many makes of remote control units which are often used in small or temporary studios, as well as in the film chain. Thus it is advisable at this time to become familiar with the automatic electronic action of such controls.

Automatic switching is based upon electronic biasing arrangements whereby one channel amplifier tube is allowed to conduct, other channel tubes being biased below cut-off, hence non-conducting. The *rate* of fade out and fade in is controlled by RC time constants in the biasing circuits. Considering a two-channel circuit, Fig. 3.13H shows the electronic action necessary for the fade out-fade in type of switching, where channel 1 is faded out toward black screen at a certain rate, and channel 2 is faded in at the same rate of time. In automatic systems, a switch is thrown at t1; at t2, the screen is black (channel 1 faded to black, channel 2 just at cut-off), at t3, channel 2 picture is up to normal brightness on the screen. Such circuits usually provide for automatic lap-dissolves as well as the fade out-fade in type of switching, as well as pre-set of rate of switching action.

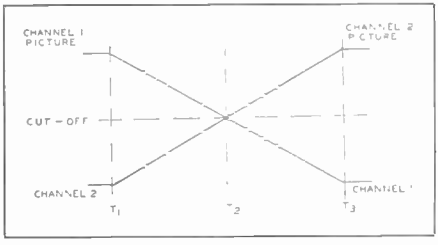

Figure 3.13H. Electronic action for automatic fade out-fade in between two separate video signals.

Fig. 3.13I illustrates the basic type of automatic switching. Switch SW1 and SW2 is a two-gang switch so that when SW1 section is closed, SW2 section is open. When SW1 is closed, the excessive bias on the tube's suppressor grid is removed, and channel 1 is conducting a

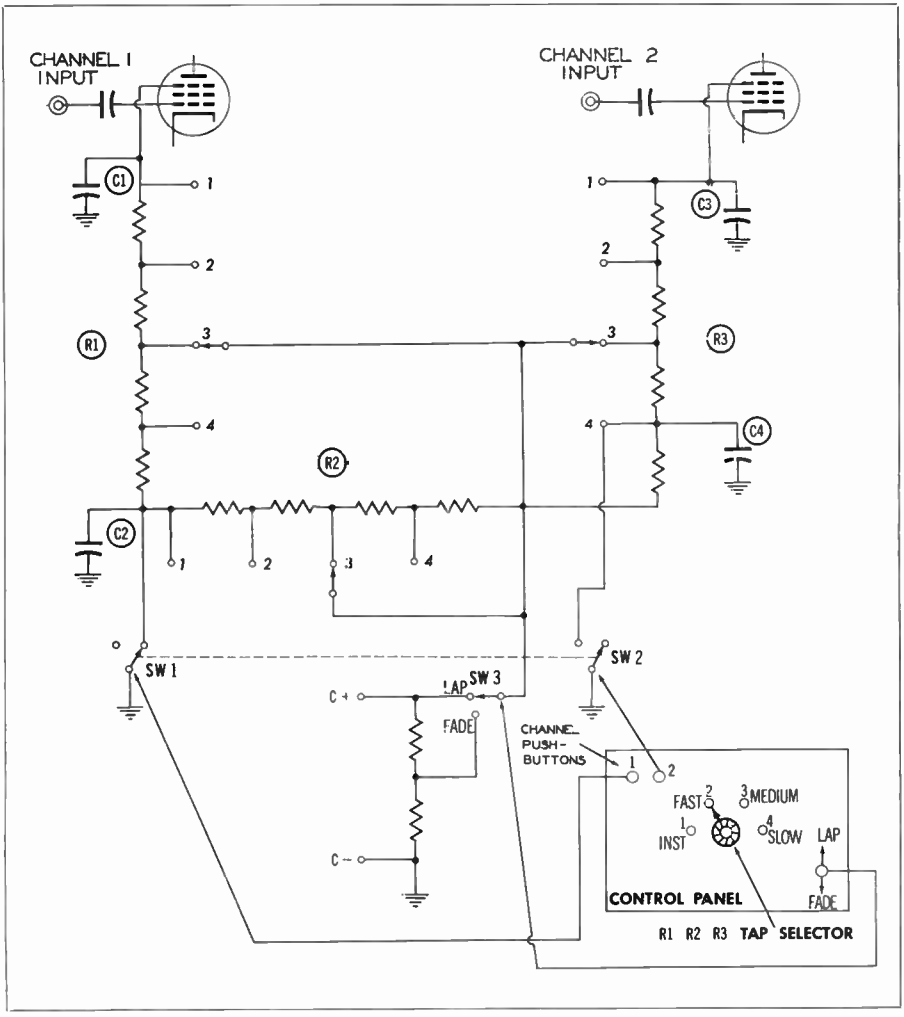

Figure 3.13.. Basic automatic switching arrangement. Switching occurs automatically at pre-set rate by pushing the selector channel pushbotton.

picture. At this time, channel 2 tube is biased below cut-off and is not conducting. When channel 2 pushbutton on the control panel is operated, SW1 opens and SW2 closes, just reversing this condition. The rate at which V1 falls to cut-off is determined by the time-constants of R1 C1 and R2 C2, the R being adjustable. The rate of V2 rise to conduction is determined by the time-constant of R3 C3 only, since C4 is now grounded when SW2 is closed. R3 is also adjustable. This circuit allows 4 rates of switching; instantaneous, fast, medium and slow, depending upon the setting of the control on the panel which actually switches the taps on R1, R2 and R3. SW3 is a 2-position switch which in one position causes one picture to completely disappear before the other picture appears (fade). In the "Lap" position, the first picture is still visible when the second picture appears. As shown, this is

accomplished by varying the C minus supply to the switcher tubes.

3.14 Video Recording Facilities

A great amount of time and almost a million feet of motion picture film a year is used in video recording. This is a recording made by photographing the visual images (displayed on a special kinescope) on motion picture film in specially adapted cameras. Motion picture photography of an image on a kinescope picture tube is variously referred to as video recordings, kinescope recordings, kinephotos, or teletranscriptions. Many important reasons contribute to the necessity for video recordings: (1) transcription of a live program or special event for delayed broadcast or syndication; (2) reference file, for documentary, legal, historic or advertising purposes; (3) for rebroadcast of a program to "split-networks" in different time zones; (4) record of programs for study by the production department to check lighting effectiveness, camera shot angles, background reproduction, camera matching, etc.; (5) recording which allows editing for immediate rebroadcast or at a later date; (6) recording used as an adjunct to motion picture theatre programs.

The television operator, particularly in the larger stations, should be familiar with video recording facilities. (Operations are described in Chapter 6.) Incidently, no greater challenge exists in the entire TV field than improvement in equipment and operational techniques in this highly important link.

Two different methods are commonly used for recording both picture and sound onto a single motion picture film.

(1) The single system method. The picture image and the sound track image (variable area or variable density), recorded simultaneously, in a single pass through a combination picture and sound recorder. This method is usually employed only when a single recording is to be made. Variable area sound tracks are usually used in this system.

(2) Double system method. Employs separate picture and sound recorders, operated in synchronism and at constant relative speed. This method is used for optimum quality of both picture and sound in the final composite release print. Most often used when recording is to be distributed for wide use.

In practice, either 35mm or 16mm cameras are used for kinescope recording. The kinescope upon which the image to be recorded is displayed is a special type of tube employing a flat face, with particular phosphor and brightness characteristics appropriate to allow use of inexpensive film. One popular type of transcriber kinescope is described later. The associated circuits of such a tube always permit reversal of direction of horizontal sweep (for reasons described below), and provide means so that either positive or negative images appear on the screen. The need for this feature will become apparent in the following discussion.

There are several alternate procedures which may be used in kinescope recording, applicable to either the sin-

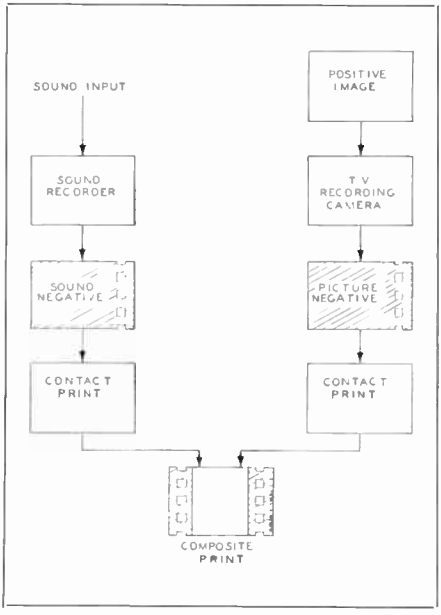

Figure 3.14A. Double-system method of video recording from positive image.

gle or double system methods described above. The choice depends upon the purpose for which the recording is made, or the time allowable for use of the finished recording. One of the more popular procedures is diagrammed in Fig. 3.14A. In this method, a positive picture appears on the kinescope (just as seen on the monitor or any receiver picture tube) and is photographed by the camera. Since the image is positive, the film will be a negative picture. This film is then processed either by a local motion picture laboratory, or by the station itself when the developing and printing facilities are available. The composite positive print is then made from the combined sound and picture negatives. The picture print produced in this manner *does not have the standard emulsion position.* This is to say that film is ordinarily placed in the projector so that the emulsion side is toward the lens. Therefore, *it is necessary to reverse the image, left to right, on the kinescope screen.*

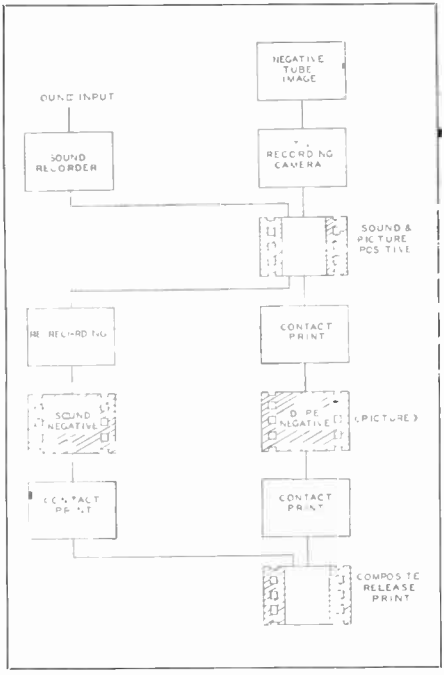

Figure 3.14B. Video recording from negative kinescope image.

Note, that this is not a negative picture, but simply reversed in horizontal picture content. This is accomplished by reversing the direction of the horizontal scanning sawtooth current on the transcriber kinescope from that ordinarily used for direct viewing of the image. Thus it is necessary to incorporate this means as pointed out above.

When only one copy of a video recording is required, or when time is an important factor in producing a positive print, the method outlined in Fig. 3.14B may be used. A negative kinescope image is obtained by employing an extra amplifier stage or other means to obtain a signal from a negative picture polarity circuit. Since the image is a negative picture, the photographic recording may be made on positive film. In this single system method, both picture and variable area sound are recorded on the same strip of film. Development in positive type developer results in standard emulsion position of the film suitable for projection or rebroadcast. If copies are necessary, a "dupe negative" is usually made from the picture and used in making final composite release prints. A negative is also made of the sound track, usually by re-recording, used to print the final positive sound tracks. Re-recording eliminates the necessity for using a duplicate negative of the sound track which invariably results in serious loss of high-frequency response.

The reader should remember that it is not necessary to use positive prints for TV film telecasting, since the TV camera employs a polarity reversal switch enabling the projector to use either positive or negative pictures (section 3.13). Positive prints are advantageous however, since the film technicians often project the film on a screen in the film control room for purposes of editing, etc.

In video recording equipment, the engineer is faced with the same problem in reverse which occurs in adopting the 24 frame per second film projection to the 30 frame per second TV system. In this case, he is faced with adapting the

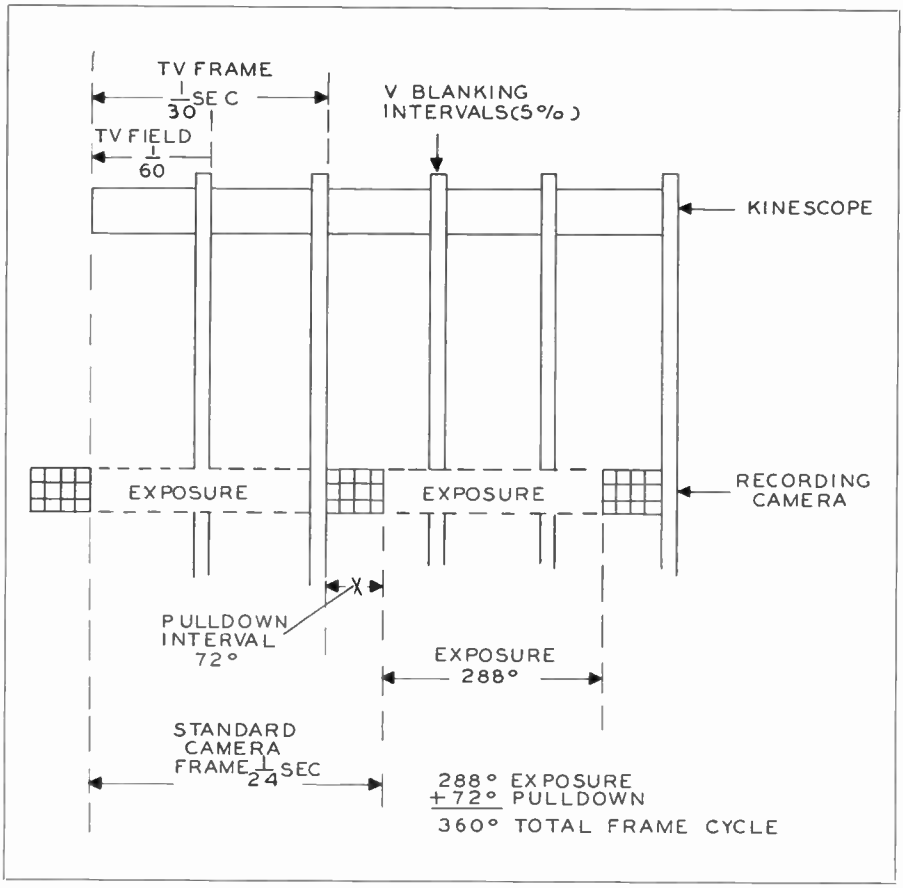

Figure 3.14C. Adapting the TV recording camera standard frame rate of 24 per second to the standard TV frame rate of 30 per second.

30 frame per second image appearing on the kinescope to the standard 24 exposed frames per second of the recording camera. It is convenient for the discussion here to relate 5 television fields (5/60 sec. or 1/12 sec.) to two film picture frames, since 1/12 second, or 2/24 second is equal to two frames of motion picture standards. Therefore, if we omit one of every five scanning traces, we are left with four scanning traces, or two TV frames. This results in compatibility between the two systems.

This is accomplished in practice by the sequence of operations illustrated in Fig. 3.14C. If we relate the standard film cycle to 360 degrees, the "tube cycle" may be seen to equal 288 degrees. This tube cycle is the lace and interlace pattern, or one complete TV frame. With the camera and kinescope tube synchronized, the film is exposed for 288 degrees or one tube cycle. During the first quarter of the next complete cycle, the film is pulled down to advance one frame. The camera shutter is closed during this time, and the pulldown time of the film is actually somewhat less than this, being in the vicinity of 60 degrees. Exposure (shutter open) then takes place for another 288 degrees (1/30 sec.) during another TV picture frame. Pulldown of the film follows to complete the film cycle. The exposure time is very critical

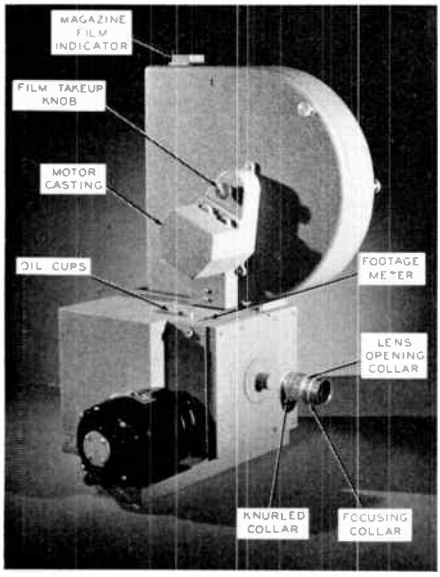

Figure 3.14D. (1) Eostman Television Recording Camero. Courtesy Eastman Company.

and must be within one-half line of a complete frame (525 lines) to avoid an effect known as "banding." This is a reproduction on the film of an alternately varying density region. The exposure time is controlled by either mechanical or electronic shutters, to be described.

A popular type of TV recording camera using the mechanical type shutter is illustrated in Fig. 3.14D(1) and 3.14D (2). One synchronous motor is used to drive the entire film transport, and a smaller synchronous motor to drive the shutter. The two motor shafts are tied together by means of a coupling which permits adjustment of exact sync between the two mechanisms. When once set, operation should remain synchronized. The film transport motor is shown in Fig. 3.14D(1). The smaller shutter motor is inside the camera housing. The film magazine is of double-chamber design, holding 1200 feet of 16mm film (30 minutes supply), and houses both the unexposed and exposed film. The film buckle switch (Fig. 3.14D(2)) is in series with the power supply to the motors, and opens the circuit unless the actuating lever of the switch is held closed by the film running in a straight path. Thus if the film should buckle, or if a failure occurs in the film take-up system such as a broken film or the end of the film roll is reached, the motors are automatically shut off. The loss-of-loop lever causes an indicating light to burn if either the upper or lower loop is lost during operation.

Complete set-up and operation of this equipment is described in Chapter 6 to acquaint the reader with the general functions of video recording cameras.

Fig. 3.14E illustrates the RCA Kinephoto equipment, which contains the kinescope and associated circuits, and the recording camera in one coordinated cabinet. This particular setup allows either mechanical or electronic shutter operation. When operated mechanically, the camera and shutter are driven by separate synchronous motors. The shutter drive is driven by a 3600 rpm synchronous motor driving the shutter at 1440 rpm through a set of precision gears. The film transport and intermittent mechanism is driven by another motor in sync with the shutter motor.

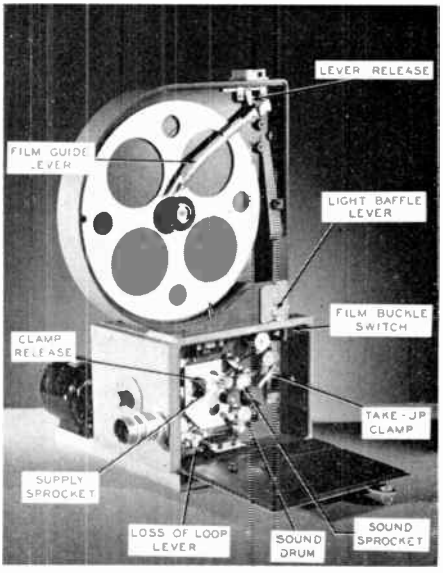

Figure 3.14D. (2) View of Eastman Television Recording Camera with film cover removed ond side door down. Courtesy Eastman Company.

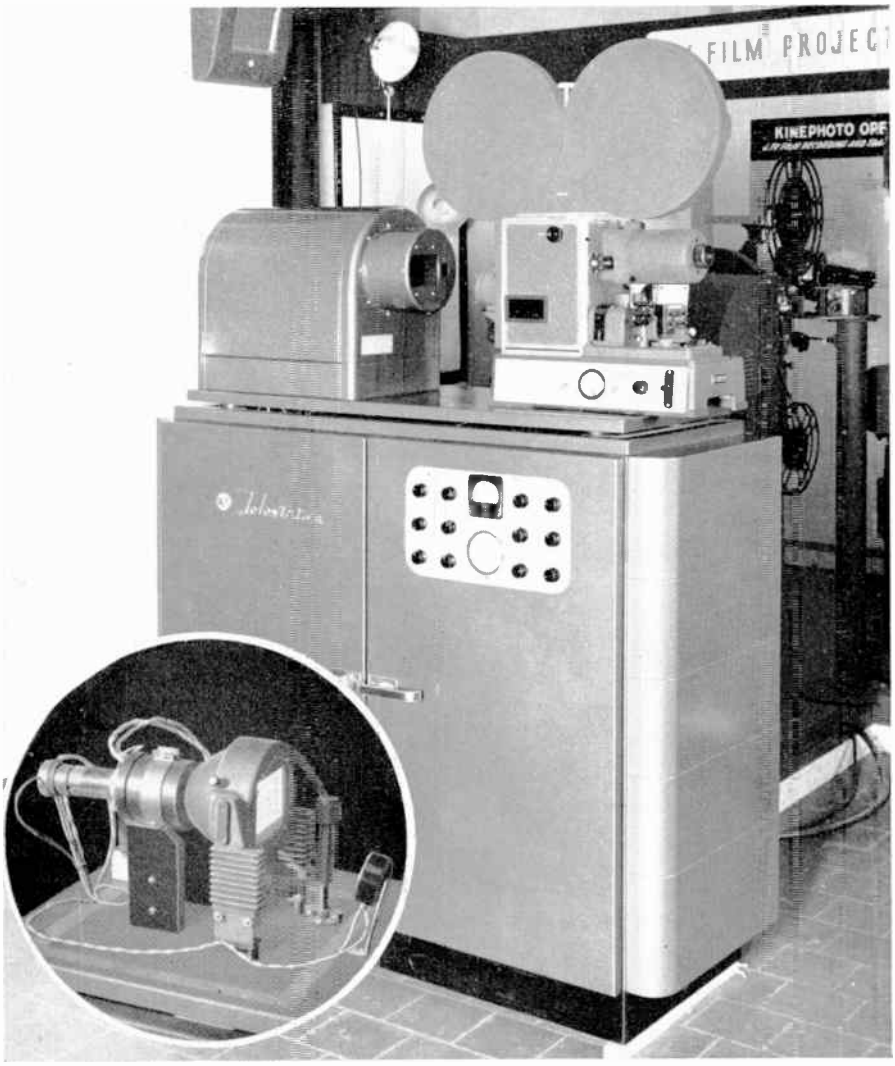

Figure 3.14E. RCA Kinephoto Equipment. Courtesy RCA.

The operator will find that all video recording systems use separate motor drives for the shutter and film transport, to prevent any possible inter-actions between the two mechanisms.

In the electronic control of exposure, the kinescope image is biased on and off by a special blanking signal. In this system, the mechanical shutter is replaced in function by the electronic exposure control circuit triggered by a contact on the camera which operates in proper phase relationship with the film transport. It is convenient to start with the sequence of operations just after the film has been pulled down and the frame placed in back of the lens ready for exposure. At this time, a mechanical contact closes, causing the electronic control circuit to remove the cut-off bias from the kinescope permitting the image to appear on the screen. This produces exposure of the film frame. The control circuit, actuated by the horizontal drive

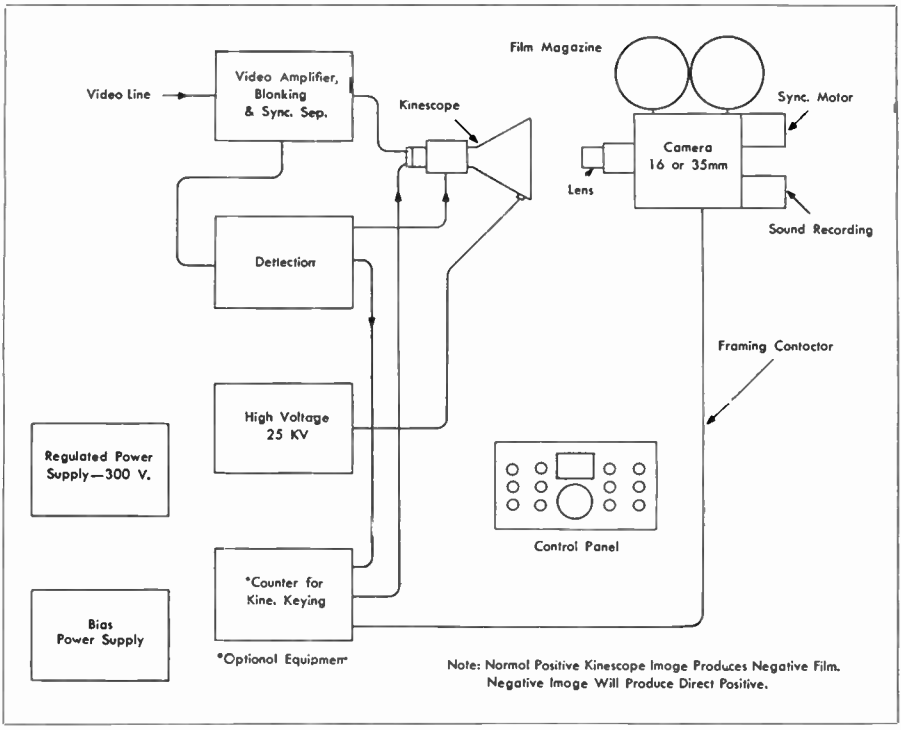

Figure 3.14F. Simplified block diagram of RCA Kinephoto Equipment. Courtesy RCA.

pulses from the incoming video signal, counts to the end of the 525th line (one TV frame) at which time the kinescope bias is returned to cut-off, extinguishing the image, and ending the exposure of the film. The film transport mechanism then operates to pull the next frame in place for exposure and the process is repeated.

A simplified block diagram of the RCA equipment is shown by Fig. 3.14F. The incoming video signal is supplied from a studio distribution amplifier via coaxial cable. The signal is first amplified, then separated into: (1) signal for synchronizing the raster of the kinescope with the TV pickup camera, and (2) modulating signal which is amplified and modulates the kinescope beam in accordance with the video signal. The sync signals control the deflection amplifiers for the kinescope.

Shown in Fig. 3.14E is the kinescope mounting arrangement inside the shield. The tube is the RCA Transcriber Kinescope type 5WP11 (described below), and is mounted on insulated supports. Also shown are the kinescope and deflection yoke assemblies. The unit in front of the face of the tube at extreme right is a photronic cell connected with a meter on the control panel to indicate relative brightness of the tube's output. The microammeter on the control panel also measures the kinescope beam current providing a clue to the brightness of picture due to the direct relationship between beam current and light output. A video gain control is incorporated in the picture tube circuits. The kinescope bias control sets black level, or point of visual extinction of the return lines.

The kinescope circuits in this equipment provide for either positive or negative images. Video recordings made from a positive image result in a film negative which may be rebroadcast at once by reversal of the video phase in the

DATA FOR 5WP11 TRANSCRIBER KINESCOPE

(Raster Size: 2½" x 3⅜")

MAXIMUM RATINGS (Design-Center Values):

Anode No. 2 Voltage	27,000 MAX volts
Anode No. 1 Voltage	6,000 MAX volts
Grid No. 2 Voltage	350 MAX volts
Grid No. 1 Voltage:	
Negative bias value	150 MAX volts
Positive bias value	0 volts
Positive peak value	2 MAX volts
Peak Heater-Cathode Voltage:	
(Heater negative with respect to cathode):	
During equipment warm-up period not exceeding 15 seconds	410 MAX volts
After equipment warm-up period	125 MAX volts
(Heater positive with respect to cathode)	125 MAX volts

TYPICAL OPERATION:

Anode No. 2 Voltage*	27,000 volts
Anode No. 1 Voltage Range (for Anode No. 2 current of 20 Microamps)	4,200 to 5,400 volts
Grid No. 2 Voltage**	200 volts
Grid No. 1 Voltage (for visual cut-off)	—42 to —98 volts
Anode No. 2 Current	20 microamp
Anode No. 1 Current (Maximum)	25 microamp
Grid No. 2 Current Range	—15 to +15 microamp
Maximum Grid No. 1 Circuit Resistance	1.5 megohms

* Brilliance and definition decrease with decreasing anode voltages. In general, anode No. 2 voltage should not be less than 15,000 volts.

** Subject to variation of ± 40% when grid No. 1 voltage cut-off is desired at the average cut-off value of —70 volts.

Pin 1: Heater
Pin 2: Grid No. 1
Pin 6: Anode No. 1
Pin 7: Internal Connection (do not use)
Pin 10: Grid No. 2
Pin 11: Cathode
Pin 12: Heater

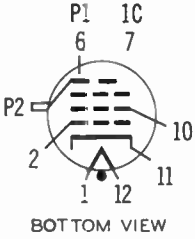

Figure 3.14G. Courtesy RCA

film camera (section 3.13). The negative may then be used to produce any number of desired prints. A field of application which seems destined to grow with the years is theatre TV in direct cooperation with television broadcast stations. In this case, the polarity switch is thrown to produce a negative image on the kinescope, allowing photographing and processing of direct positives for immediate projection in the theatre. According to the General Precision Laboratories, special processing equipment is available allowing the taking of pictures from a TV monitor with projection of the finished pictures on the screen in 40 seconds.* The subject warrants the attention of all television operators.

The picture tube used in the RCA Kinephoto equipment and in general applications of video recording setups, is the type 5WP11 Transcriber Kinescope illustrated in Fig. 3.14G. This is a five inch flat-face picture tube especially designed for photographically transcribing television broadcasts onto motion picture film. The fluorescent screen emits a highly actinic blue radiation, with persistence sufficiently short to prevent "carry over" from one frame to the next.

Electrostatic focus and magnetic deflection are utilized in the operation of this tube. Certain features are included to suppress corona, arc-over, or high-voltage leakage. The design features include an external conductive coating on the neck which, when grounded, prevents corona between the yoke and neck; a built-in capacitor between interior and exterior neck coatings to serve as a filter for the high-voltage power supply unit;

---

*J. W. Sims: "The Two Types of Theatre Video"; *Audio Engineering*, January '52.

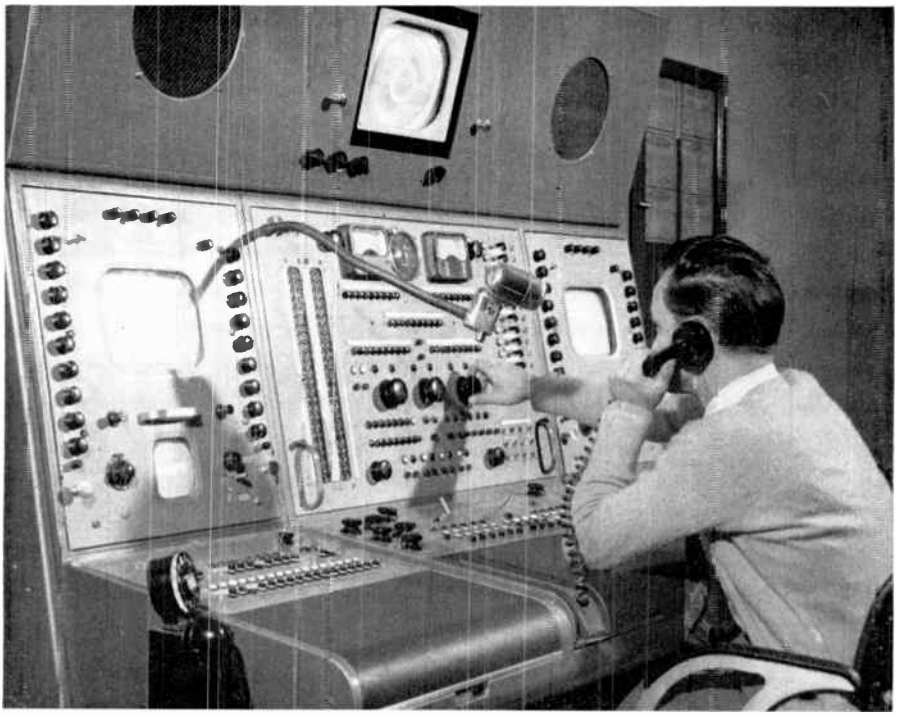

Figure 3.15A. Master control position at WRGB. Courtesy General Electric.

Figure 3.15B. Audio amplifier racks and patch panel in master control room at WRGB. Courtesy General Electric.

and external insulating coating on the bulb cone to minimize sparking over the glass bulb under high humidity conditions; and a duodecal 7-pin base especially designed for high-voltage service.

The data associated with Fig. 3.14G shows the maximum ratings and typical operation ratings of the tube. Special set-up and handling instructions are included in Chapter 6 under Video Recording Techniques.

3.15 The TV Master Control

Larger television stations with more than two local studios must incorporate facilities to simply and successfully handle the sequence of programs originating from many different sources. The master control position must efficiently coordinate studio shows, remote and network pickups, and films so that proper transmission of video and audio signals are maintained. The general lay-out of master control rooms varies to the extreme, but basically the functions may be listed as follows:

Generation and distribution of sync and blanking signals; selection of program sources for feed to transmitter line, feed to network lines, audition feeds

to clients' rooms, etc.; monitoring of on-the-air pictures and waveforms; monitoring of preview signals (such as program sources next to be used); stabilization and control of picture and sync signals from local and remote program sources; pre-set selection of sources next to be used; and test monitoring of master control equipment for maintenance and trouble shooting. An important additional facility in most master control points is the patching panel for re-routing both video and audio signals in case of trouble.

Pre-set switching mentioned earlier in the text (section 3.6) is most commonly used at this point. The term pre-set designates a switching arrangement whereby any number of program sources or a single source may be switched to a certain line or number of designated lines, simply by throwing one switch or operating one pushbutton. In practice, a main channel key is used which, when operated, will connect any source which is "pre-set" for that channel.

Fig. 3.15A illustrates the master control panel at WRGB television station. The center panel immediately in front of the operator is the Distribution Console. This functions as the multi-program facility control for both video and audio control of six studio channels and four remote or network channels. This particular console incorporates a lever operated mixer (section 3.6) and push-button switching facilities for switching, dissolving or fading between local studios, film control or remote or network sources. Audio control is provided by switching between three relay controlled channels, each containing gain controls and push-button pre-set control. The audio system may be interlocked with the video switching system (section 3.6) or may be operated independently. The jack strips shown on this panel are provided to set up the three relay channels.

Film projectors may also be started and stopped from this console. Such facility is often included on the master control panel especially when the film control room is located at the master control point as is often the case.

The microphone is in the talk-back system. This provides communication with control rooms, film room, or blanket coverage (all stations simultaneously) for cueing or other reasons. The operator is shown using the interphone, which provides two-way contact concerning operations at any point desired.

The monitor units on either side of the distribution console provide for on-the-air monitoring and previewing of any of several signal sources, such as studios, remote pickup signals, incoming network, or the pulse generator output. Associated controls allow the monitor to operate either from local studio and camera signals (separate video and sync) or from network and remote pickups where video and sync are combined in the composite signal. In this way the monitor can sync on the local waveform and show incoming video for the purpose of phasing the local sync. This provides smooth transition from local to network or remote signal. (Section 3.9.)

A block diagram of a typical audio control system as used in TV stations is shown in the first section of this chapter. Operational functions such as mike keys and faders are located on the audio control for the individual studios. Amplifiers are usually placed in equipment racks with patch-panel facilities as shown in Fig. 3.15B. This illustrates the amplifier racks for the audio channels in the master control room of WRGB. This operator is in contact by telephone with the audio director who controls recorded sound effects, background music and program audio. The final audio volume level is set at this point. Patch panels allow for emergency re-routing of the audio in case of failure in any channel.

CHAPTER

4

The Television Studio

The average radio engineer becomes familiar with Ohms Law early in his training period. This is in spite of the fact that he can measure voltage, current and resistance with electrical meters. Yet without Ohms Law, his faculties for understanding radio circuits would be sharply curtailed.

In TV, the engineer is concerned not only with Ohms Law, but the nature of the medium for which television was created, namely, light. There are certain basic relationships in this medium which should be as well understood as Ohms Law, in spite of the fact that light-meters, video analyzers and various other instruments may be used to measure these relationships.

4.1 *The Nature of Light*

There is an abundance of radiant energy in free space; heat waves, gamma waves, cosmic waves, radio waves, light waves, etc. The difference between such energies lies primarily in their respective frequency bands.

Light waves concern a band of frequencies to which the human eye is a natural receiver, just as audio waves concern a band of frequencies to which the human ear is a natural receiver. Properties of light which concern the TV operator are reflections and scattering of light rays, factors affecting contrast and detail of a picture, the influence of color in composition of a picture relative to equipment limitation, and the difference between *brightness* and *intensity of illumination.*

In a monochrome picture (black and white rendition of scale), the *more* light that reaches the eye, the "whiter" is the image. When light rays strike a white surface almost three-fourths of the rays are reflected, although not in an orderly fashion. Infinitesimal points in the reflecting surface borrows some of this energy and scatters the reflected light as if it were a tiny lamp. A dark reflecting surface reflects less light, into the eye and the image is "darker."

The phenomena of *reflection* is best exemplified by the use of a mirror. In this case, light falling on the mirrored surface is reflected at a calculable angle. "The angle of incidence equals the angle of reflection." This means that if the original light rays strike the mirrored surface at 40 degrees, the reflected light will leave the surface at 40 degrees. Such surfaces are used in varying shapes as high efficiency reflectors to control lighting of the TV pickup area.

The main point to remember, however, is that the eye "perceives" an image through the act of objects "scattering" the light which strikes their surface. Thus when a beam of light shines through a slit in a venetian blind, unless there are dust particles in the air to scatter the rays of light, the eye does not "perceive" the beam of light except as a bright spot on the floor or wall.

Certain qualities of light are called color. Again the difference lies in relative wave lengths or frequencies of *visible* light. Daylight, or "white" light such as unfiltered sunlight contain all the various frequencies of visible light. "Black" is simply a lack of light. A black substance absorbs many light rays and reflects few. A white substance absorbs few light rays and reflects many. Various colored objects absorb light rays of

other wavelengths than that particular color, while reflecting rays of wavelengths equivalent to their own. A red glass, for example, makes everything appear red when looking through it. This is not because it turns other rays into the red wavelengths, but because it destroys or absorbs all other wavelengths except those of the red spectrum.

The TV operator and producer are confronted with problems in color whether the system is black and white or color. In color systems, various hues in close proximity affect the overall composition. Exactly the same thing occurs in black and white transmission. The conversion of the varying colors into the corresponding gray scale determines the average brightness and "contrast" of a scene.

Candle power is the unit of *light intensity*. One *foot candle* may be defined as the intensity of light on a one square foot white surface when illuminated by a "standard candle" at a distance of one foot from the surface. One foot candle is a comparatively small amount of intensity. The unit of *quantity of light* is the *lumen*. The lumen describes the *amount* of light that falls upon each square foot of surface *per second*. The lumen may be related to the foot-candle as follows: one foot-candle is the intensity of illumination on one square foot when perpendicular rays of light flux totaling one lumen strike the surface. This occurs when the "standard candle" illuminates a one-foot square white surface, one foot away.

Obviously a source of light radiates light flux outward from it both perpendicularly and horizontally, and is said to have spherical radiation. Thus it helps to relate amount of quantity of light flux (lumens) that are contained in a given sized sphere.

One lumen is the amount of light flux contained within a "unit solid angle" emitted from a light source of one candle-power intensity.

From geometry the unit solid angle is termed a "steradian," and is the solid angle which encloses a square surface of a sphere. Straight lines drawn from the point of light source bound each one of the four equal sides of the unit solid angle, the angle between them being equal to one *radian*, or 57.3 degrees (approx). The sides of the square are equal to the radius of the sphere from which each angle is made. From geometry, there are 2π radians in a circle. From the same relationship, there are 4π solid angles in a sphere, and 4π (4×3.14) is equal to 12.57. Therefore:

The lumens of light flux emitted from a one candle-power intensity of light is equal to the number of solid angles in a sphere, which is 4π, or 12.57 lumens.

Since light does radiate spherically, it spreads out as it progresses from the source. If it is necessary to ascertain the illumination present upon a given surface at a certain distance from a given candle-power of light source, it is calculated by taking into account this spreading of light waves called the *inverse square law*. Fig. 4.1A illustrates this effect. Rays from the light source shining through a one square foot aperture at one foot from the source, will be spread out over 4 square feet at a distance of two feet. Doubling the distance increases the area covered by the square of 2, or 4 times. Since the area covered is much greater, the *intensity* of illumination *per square foot* is *reduced* as the square of the distance, as:

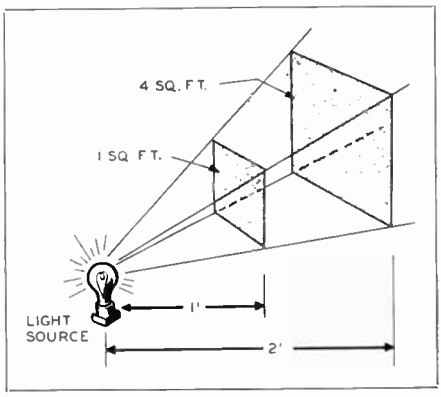

Figure 4.1A. Since light rays are radiated spherically, it is natural that a greater area is covered at greater distances from the source of light. The area covered increases as the square of the distance.

$$I = \frac{cp}{d^2}$$

where I = illumination in foot-candles.
cp = candle-power of source.
d = distance of surface (in feet) from light.

In practice, the above basic formula is modified. This is so because the above law assumes the light source to be normal to the plane of the surface, whereas in practice, the illumination must be to one side or over the TV camera.

Since this angle the light source makes with the surface must be accounted for, the *cosine law* is added:

$$SI = \frac{cp \cos \theta}{d^2}$$

where: SI = surface intensity of illumination (foot-candle)
cp = light source in candle-power.
θ = angle of light source to surface.
d = distance of surface (in feet) to light source.

Example: Assume a test pattern is illuminated by a light source of 1000 candle-power which is displaced 45 degrees from the plane of the test pattern card, and at a distance of 12 feet.

$$SI = \frac{(1000)\ (\cos 45°)}{12^2}$$

$$= \frac{(1000)\ (0.707)}{144}$$

$$= 5 \text{ foot-candles (approx.)}$$

This is the incident light reaching the test pattern, *not* the reflected light.

There is a decided difference between the *illumination* of a scene and the *brightness* of a scene. It should be realized that, for example, the *brightness* of a white card upon which 100 candle-power of light is falling, is far greater than the *brightness* of a black card illuminated with the same light source. Therefore it is necessary to consider the factors which affect brightness, which are: total light flux on surface, reflecting and diffusing properties of surface, affected by color.

The unit of brightness is the *lambert*. The basic lambert = π candles per square centimeter. To convert from the less familiar metric system to the more familiar English system:

One foot-lambert = $1/\pi$ candles per square foot.

Therefore: One candle per square foot = 3.14 foot-lamberts.

The foot-lambert may also be defined as the brightness of a perfectly diffusing surface which emits one lumen of light flux per square foot of surface.

The *cosine law* must also be taken into account for the brightness of a surface or portion of the surface. (Since brightness may vary from point to point of a given surface, as a test pattern.)

The *cosine law* as expressed for brightness is:

$$B = RI \cos \theta$$

where B = brightness at a given distance from the surface, for any angle θ.
R = reflection coefficient of the surface point.
I = illumination of the incident rays.

Incident rays are the light rays from the source of light. Reflected rays are the rays of light reflected from the surface which is illuminated by the incident light.

The TV engineer will encounter another factor in reading technical literature pertaining to lighting; the degree Kelvin rating given to light sources such as single or banks of lighting fixtures. This is designated as K°. While the precise derivation of the Kelvin degree scale is quite complicated, only the practical content of its interpretation is considered here, as applied to problems concerning TV studio lighting.

The Kelvin scale concerns a factor known as "color temperature." It is based upon the concept of a *blackbody*, which is a body that absorbs all incident light rays and reflects none, therefore a theoretical concept only. If such a physical entity is heated, it begins to emit visible light rays, first dull red, then red, then through orange to "white heat."

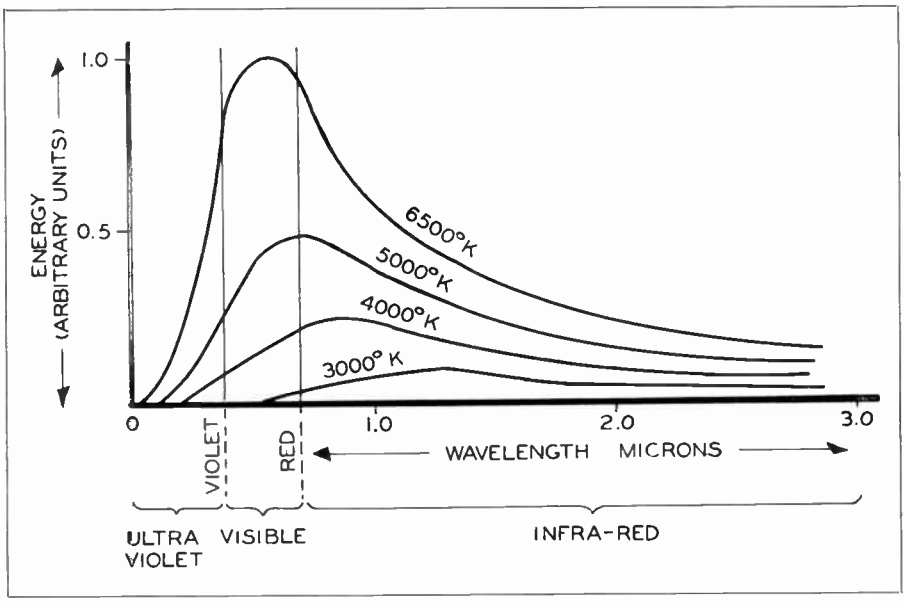

Figure 4.1B. Concept of Kelvin degree scale of color temperature.

Many readers are probably familiar with the heating of metals where this occurs. If the metal could be heated high enough without melting, a bluish-white radiation would occur. Thus the higher the degrees Kelvin, the nearer is the approach to the sunlight spectrum. A low degree Kelvin rating is a light source with most of the *visible* radiation in the red spectrum. Most incandescent lamps such as ordinarily used in house lighting are comparatively low in K° rating. Fig. 4.1B illustrates the concept of this scale. "Daylight" is given a rating of approximately 6500° K.

It should be noted that the Kelvin rating has nothing to do directly with actual radiated heat from a light source. For example, a low Kelvin rated lamp actually has most of its "light" emitted in the invisible infra-red region, which constitutes "heat" waves. When light from such a source is raised to a high enough intensity to brightly illuminate a TV studio, the heat is very noticeable to those under the radiation. Rather the Kelvin rating simply compares the actual distribution of colors, as observed visually. The standard of comparison, then, is the visual emission from a blackbody as it is heated to higher and higher temperatures. "Daylight" is considered cold light, yet has a comparatively high K° rating. Filament (incandescent) type lamps range from 3500 to 4500° K; certain arc-type lamps have a still higher K rating, approaching daylight characteristics. The lower K rated incandescent lamps are sparingly used in TV studios to eliminate the high degree of heat radiation on the personnel. The operator will find quite a mixture of lamps in use in actual practice.

4.2 *Studio Lighting*

There are always a number of subdivisions to any basic problem. The basic problem in television studio lighting is this: the light must help furnish the mood called for in the program script, *as interpreted by the "eye" of the TV camera.* The interpretation center of the camera is the image orthicon. Any schedule of lighting, installation planning or actual use, always embraces the knowledge of how this will be interpreted by the image orthicon.

Actual planning and installation of lighting facilities are beyond the scope of our field here. Indeed, the subject of planning, installation, wiring facilities, and light sources themselves could well constitute a complete book of its own. The item of most obvious importance is to have ample light for the dimensions of the studio, so that the camera lens may be stopped down to achieve good depth of field. Next is the color temperature quality of the light sources used, to allow comfortable working temperatures for the talent and engineers, and to adequately control any desired lighting effect.

The studio lights which must be placed overhead are usually suspended from a 1½ inch iron pipe network known as the *grid*. The pipe cross-members are around 4 to 6 feet apart, with adequate clearance to the ceiling to allow electrical raceways, conduits and sheaves for the wiring, and ventilation ducts. When the studio ceiling is high enough, catwalks are often included around and above the grid to facilitate light adjustment or the hanging of scenery by studio personnel.

Most of the main key lighting (described later) is supplied at approximately camera height, calling for floor-mounted fixtures, usually of the mobile type. Fig. 4.2A illustrates the more popular types of TV studio lighting fixtures. A control panel is often used for suspended type fixtures, consisting of headlocks and rope locks to permit rotating, tilting and fixing of the associated overhead banks from a convenient location on one side of the studio. Some of the more complex installations use electrical "dimmer" circuits either in the studio or control room. Effective dimming, however, may also be accomplished by tilting, rotating or cutting off half-banks from a control panel.

Combinations of different types of lighting sources are used primarily to achieve a color spectrum more nearly like the daylight range than may be done by any single type. It is recalled from Section 2.2 that some image orthicons have a range of response well into the infra-red spectrum. Infra-red light has a property of penetration into the skin so that men, and some women, appear to have a beard, even though none exists to the naked eye. When such

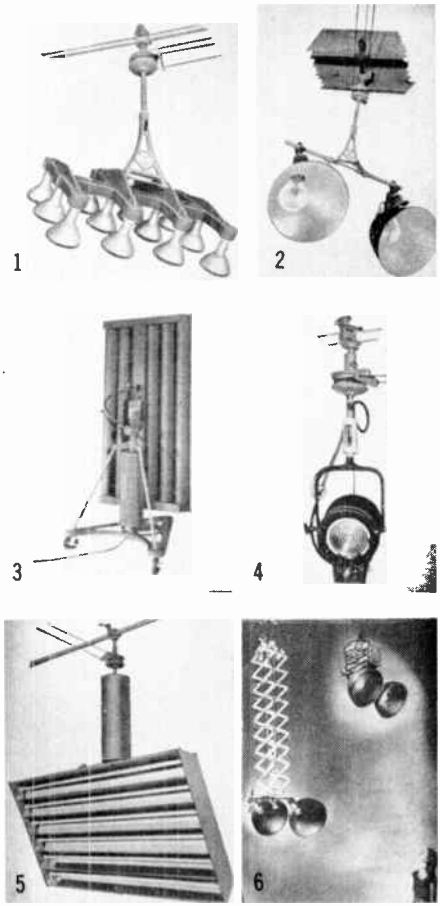

Figure 4.2A.

INCIDENT LIGHT REQUIRED FOR TYPE 5820 IMAGE ORTHICON

Lens Stop	Incident Light in Ft-C
f:1.9	2-4
f:2.8	4-8
f:3.5	6-12
f:5.6	16-32
f:8 (most often used)	32-64
f:11 (most often used)	60-120
f:16 (most often used)	120-240

Table 4.2B.

tubes as the type 5655 were used, "minus red" filters, such as the Corning 9788 were often used over the camera lens. This particular difficulty has been overcome by the development of the type 5820 and 5826; the 5820 being the most popular pickup tube in use at studios at the date of this writing.

The amount of incident light normally required for modern studio operation seldom exceeds 300 foot-candles. The table of Fig. 4.2B shows the RCA recommendations of incident light required for the type 5820 image orthicon. As shown, f:8 to f:16 are the most normally used lens stop openings, which give adequate depth of field for most studio pickups. This indicates a maximum required light intensity of 240 footcandles, although more is usually available for unusual conditions. The incident light tabulated here indicates the amount necessary at the scene of action, as measured with a light meter (color-corrected) facing the camera lens and perpendicular to the lens axis.

The "interpretation" of various kinds of lighting sources by the type 5820

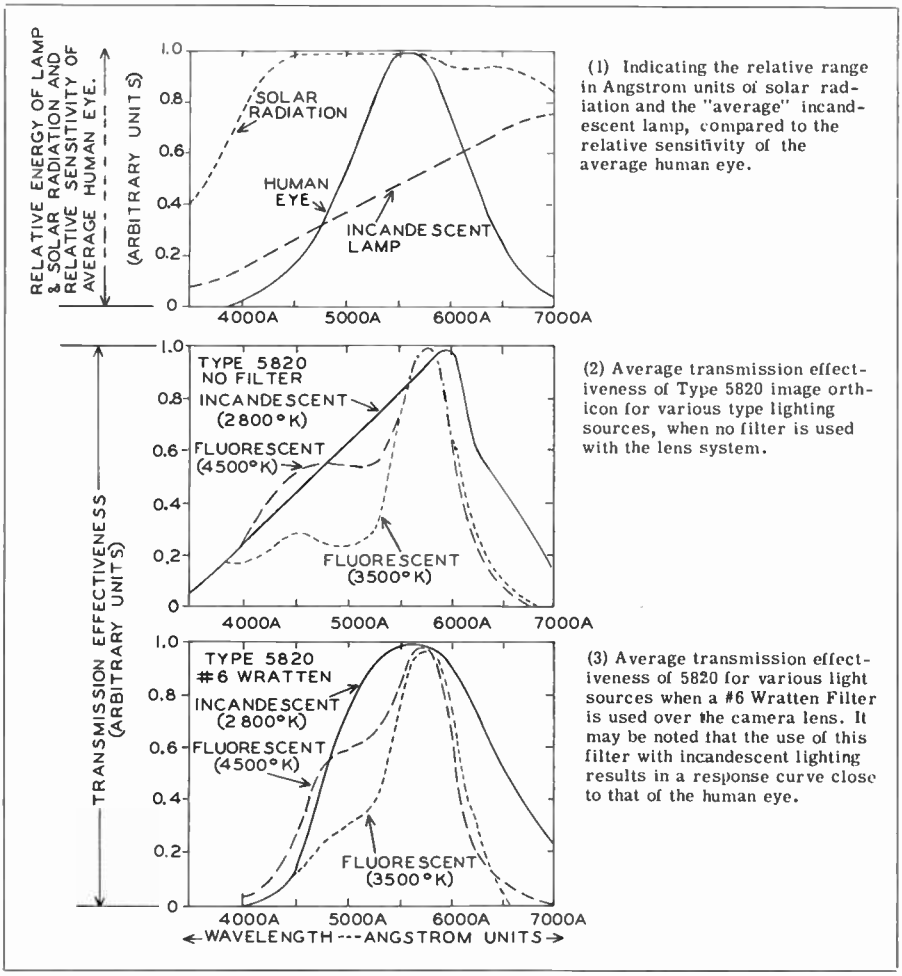

(1) Indicating the relative range in Angstrom units of solar radiation and the "average" incandescent lamp, compared to the relative sensitivity of the average human eye.

(2) Average transmission effectiveness of Type 5820 image orthicon for various type lighting sources, when no filter is used with the lens system.

(3) Average transmission effectiveness of 5820 for various light sources when a #6 Wratten Filter is used over the camera lens. It may be noted that the use of this filter with incandescent lighting results in a response curve close to that of the human eye.

Figure 4.2C. The curves of (2) and (3) are derived by multiplying the relative energy of the light source by the relative energy of the type 5820 image orthicon.

image orthicon may be seen by observing Fig. 4.2C. In (1) may be seen relative energy of solar radiation and the popular incandescent lamp, as compared to the response of the average human eye. (This may be called the "interpretation" by the human eye and forms the basis of our comparisons.) In (2) is shown the image orthicon interpretation of the incandescent lamp, as well as two types of cooler fluorescent lamps, when used without filters over the lens. In (3) is the image orthicon interpretation when a No. 6 Wratten filter is used over the lens system. These curves are obtained by finding the product of the image orthicon and light source sensitivities. The spectral response curves of pickup tubes are given in section 2.2. It is noted that all tubes have an extended response into the ultra-violet region, which sometimes results in unnatural rendition of skin tones as does infra-red radiation. At the time of this writing, the most satisfactory method of handling this problem is in the use of a "minus blue-violet" filter such as the No. 6 Wratten. It is noted from Fig. 4.2C (3) that using this filter with incandescent lighting results in a response very similar to that of the human eye, providing a more predictable scale with which to work in studio lighting from visual observation. This also allows "mixing" of fluorescent with incandescent since the Wratten No. 6 attentuates the response in the violet region.

While studio lighting technique is still undergoing an accelerated development stage, it is presently possible to divide the requirements into five divisions. There is yet some discrepancy in terminology: some engineers classing general lighting and key lighting in the same category, others separating the two into precise classifications. For the purpose of completeness, we will consider these two items as separate in function, resulting in the five types as follows: (1) Base or General Lighting; (2) Key Lighting; (3) Fill Lighting; (4) Modeling or Accent Lighting; and (5) Effects Lighting.

Base or General Lighting, when considered as a separate function from key lighting, designates a low intensity of wide and uniform pattern, used simply to supply a workable amount of light without greatly considering the TV camera. Such light is used to generally illuminate the studio working area to arrange preliminary setups of scenery, moving of props and equipment into place, etc. Being of a general nature, floodlights are used which may be either incandescent or fluorescent types. When such lighting is of sufficient intensity to affect the image orthicon interpretation to any great degree, it is classed with the following Key Lighting. Base lighting when considered separately usually originates overhead.

Key lighting is the principle illumination which determines camera lens stop opening; this is to say the "key" to the visual appearance of the scene. Key lighting should, ideally, provide good scenic illumination from any possible camera angle during the program. Such lighting therefore is usually placed at the front of the pickup area at average camera level. This requires floor stands for Key lighting, and are generally of the "dolly" type to provide easy mobility. See Fig. 4.2A (3). The technique of key lighting varies considerably between stations. Some lighting engineers will not mix "hot" and "cold" light sources to provide key illumination. Other stations mix these types of light sources with apparently little difficulty. The fact is that no hard and fast rule can be applied here, since the color combinations of the scenery and stage props as well as clothing and costumes affect the overall interpretation considerably. To add to the problem, the camera operator will find too often that programs are preceded with inadequate rehearsal time, taxing his ingenuity to the utmost in preventing "blooming" on the highlights and washed out grays in important scenic portions. We hope that the operational portion of this text will prepare the operator psychologically for his duties under practical conditions. The importance of such preparation is

Figure 4.2D. (1). Side of face in shadow.
(2). Use of fill light to eliminate face shadow.

secondary only to familiarity with his equipment.

Fill lighting is added illumination of portions of the scene or subject to register more detail in the shadow areas. Fig. 4.2D illustrates the effect of Fill lighting. This type of illumination calls for a diffused source, and with key lighting at camera level, fill lighting is usually placed overhead. Floodlights equipped with diffusers and beam adjusters to result in a narrow beam instead of a flood spill are often used, or Fresnel lens spotlights with diffusers. This lighting "fills-in" in area where the key lighting, being at camera level, cannot adequately illuminate.

Modeling or Accent lighting may be divided into any number of subdivisions depending upon how thorough the engineer cares to explain it. Basically such lighting may be used to create artistic effects, or to enhance the appearance of the scene or subject. Backlighting is a fundamental type of Accent or Modeling lighting. Backlighting is used to provide pictorial "separation" between an object or a subject and its background. Observe Fig. 4.2E. Note how backlighting sets the subject out from the background. The most popular equipment used here is the Fresnel lens spotlight, equipped with a device known as "barn door," which controls the shape of the beam pattern commonly referred to as the "spill light." Backlighting sources are usually placed at from 90 to 135 degrees angle with the camera orientation. Accent lighting may actually include any combination of the basic types of lighting to achieve an accent or modeling effect.

Effects Lighting embraces quite a wide range of light sources, special accessories and application techniques. Firelight, window light, cloud effects, "lightning" and a simulated moon are basic examples of effects possible with lighting sources. Such lighting may also include backscreen projection as de-

Figure 4.2E. (1). Subject without back lighting.
(2). Same subject with back lighting.

scribed in the previous chapter. Spotlight type lights may use projection lamps ranging from 75 watts behind a 3″ Fresnel lens, to 5000 watts behind a 16″ Fresnel lens. An external adjustment handle or knob is usually included which permits a spill adjustment variation of 5 to 50 degrees. A frame on the front of the spotlight allows the use of any variety and shape of mask, for transmission of any type of light beam desired. Special motor-driven effects discs are sometimes used in front of a spotlight lens for special effects. Thus, for example, shadows of a roaring fire may be thrown across a room, seemingly originating outside a window.

Incandescent lamps are often housed in what is known as a "strip light." This is a long narrow trough-like fixture using either flood or spotlights. Three foot strip lights contain 6 outlets, and 8-foot strip lights contain 15 outlets, usually wired to three circuits to allow dousing of any desired portions of the lamps. Such lights provide a low-intensity shadowless illumination on the scenic area, background or walls. They are suspended overhead. Roundels (spread lens) and diffusers are often used on strip lights.

Fluorescent floodlights such as those illustrated in Fig. 4.2A(3) and 4.2A(5) use aluminum housings from 44 to 65 inches long, 3½ to 5 inches deep, and 16 to 44 inches wide. The 60 degree specular parabolic reflectors are designed for either 4 or 6 Slimline fluorescent lamps. Large overhead fixtures for fluorescents usually have their associated ballasts located remotely from the fixture itself to avoid any possible transmission of audible hum.

New TV studio lights have recently been developed using a cold cathode gas-discharge lamp, balanced to match the 5820 and 5826 image orthicon tubes in spectral-response characteristics. One

Figure 4.3A. Studio scene station WRGB. Courtesy General Electric.

unit is said to require only 800 watts of power and only one square foot of floor space. One unit provides 100 footcandles of illumination at 5 feet from the lamp, with practically no heat radiation. Thus four such units at 10 feet would provide 100 footcandles (inverse square law, section 4.1) which is sufficient for the 5820 tube when stopped down to f:11.

4.3 *Remember the Sound*

The discussion of video in this comparatively new medium of television is so intense for the average radioman that the all important "other 50%" of the telecast is apt to be neglected. This is an unfortunate condition since the greatest opportunities for improvement of equipment and operational techniques actually exist in the TV sound department. Long before the television market has reached the saturation level of some 2000 stations across the country, personnel concerned with TV sound transmission should have achieved a realistic "dimensional" audio.

When pictures accompany sound, the sound must depict to the ear a satisfactory relationship with what the eye perceives. Although the operator has only a monaural system for sound transmission, he must use every technique available to achieve effects of dimensions that are compatible to the monaural channel. Operational techniques are described in Chapter 6. It is imperative at this time to become acquainted with problems in acoustics as they exist in the studio, and equipment used for the sound pickup.

The acoustical requirements of a studio suitable for television shows differs radically from those of strictly aural studios. The primary reason for this difference is the much greater distance of mike operation from the sound source that may be necessary in the TV studio, and the inevitable noise that accompanies movement of actors, singers, camera and sound operators, and stage hands. The acoustical treatment in modern AM-FM studios designed for good musical transmission is such as to achieve sufficient reverberation of musical sounds with properties of diffusion to prevent boominess. Singers and announcers may then work relatively close to a microphone for clear-cut definition without undue influence on articulation by the acoustical liveness. Such studio design is incompatible for the great majority of television shows, since "action" is considered a must for good

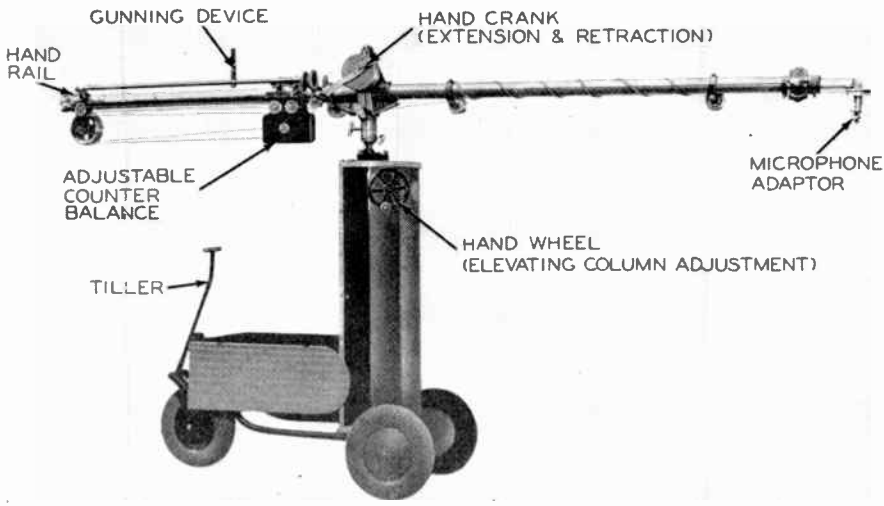

Figure 4.3B. Microphone boom and perambulator for television studios. Courtesy RCA.

video productions. This action necessitates movement not only of personnel, but often of stage props as well to vary the settings.

The basic characteristic, then, of the TV studio, is the return to the older style radio studio overtreated with sound absorption panels. The average television studio is of much greater dimensions than the average radio studio, and undue reflections from the walls result in a confusion of unwanted sounds. On shows where a pickup of orchestras or musical groups is included, portable hard "flats" are often used to the rear and sides of the musical area. Without some means of providing proper reflection of the musical tones, a muffled and "lifeless" quality prevails. Some stations have fed the musical microphone into an artificial reverberation channel such as a continuous magnetic tape loop, where any desired degree of liveness may be simulated for normal or unusual musical effects. This practice may well increase in popularity in the very near future.

Television productions usually call for both fixed type and mobile or "boom" operated microphones. On musical shows featuring a vocalist, a mike mounted on the usual floor stand may be used since the audience is familiar with this type of pickup on the stage. Often, however, the vocalist "takes off" while singing to roam around the pickup area, adding variety to the video content of the program. This calls for the boom operated mike which may be mobile or stationary, depending upon the scope of the required movement. This mike follows the performer, and is not allowed to enter the picture area as seen by the cameras and the viewer. Fig. 4.3A is a view of a performance using both types of microphone mountings.

A mobile type microphone boom is illustrated in Fig. 4.3B. The mobile mounting is termed a *Perambulator*, which enables the operator to quickly and quietly locate the mike for proper relationship with the sound source. The rear steering wheel swivels through 180 degrees and may be clamped to hold a fixed radius. A toggle brake on this steering wheel may be operated by pushing the tiller back. Operation of the hand wheel adjusts the elevating column so that the column may be raised from about 6½ feet to 9½ feet. The operation platform on which the mike operator stands raises with the boom. Further elevation, and the horizontal traversal of the boom is controlled by the hand rail. Extension and retraction of the boom is operated by the hand crank. The particular boom illustrated may be extended to 17 feet and retracted to 7 feet, 4 inches. The movement of the telescoping member is counterbalanced by weights adjustable to properly balance different microphones.

The unidirectional mike is most often used on a mike boom, so that the pickup may be concentrated upon the sound source. Movement of the microphone itself (rather than the entire boom) through an arc about its pivot is termed "gunning the mike." The microphone is moved in this respect through 280 degrees by means of the gunning device.

CHAPTER

5

Fundamentals of TV Transmission Systems

This chapter considers the ways and means of getting the television signal from point to point. The television network, which is interconnected by the American Telephone and Telegraph Company is one important example of TV transmission facilities. The basics of Studio-to-Transmitter Links (STL), remote pickup relays, and main transmitter and antenna systems are technically introduced here.

5.1 Television Network Facilities

At the time of this writing there are four major TV networks requiring nationwide transmission facilities: ABC, CBS, Du Mont, and NBC. As in regular aural radio, it is the job of the telephone company to provide equipment, men and methods to fit any desired pattern of any given telecast. Many transmission channels are called for, so arranged as to provide maximum flexibility of application. This equipment is provided in the Long Lines Division of the telephone company in each city where broadcast service is furnished to stations. For the TV networks, these offices are known as Television Operating Centers. Centers vary considerably in size and complexity, depending upon the amount of activity to be accommodated. The TV Operating Center in New York is the general control office for the entire television network service. (See illustration, Section 1.12.)

Technicians at these operating centers perform three key functions: (1) make the switches necessary to route TV programs along the required network channels; (2) check the quality of the picture and sound on suitable monitoring equipment, and (3) test and maintain the transmission performance of the network channels.

Switching schedules are made up as far in advance as possible from information received from the stations being served. This is known as the *daily operations orders*. In some cases these are transmitted via teletype directly from the station to the control center. From that point they may be retransmitted to the various operating centers about the networks, since overall switching may involve several different operation centers. Direct telephone order circuits are also used where a "last minute" change may be made anywhere across the country in the daily operations schedule.

It should be pointed out at this time that the audio portion of TV programs are seldom transmitted in the same network channel as the video portion. In practice, a TV broadcaster located directly on a video facility route may actually receive the audio service from another city. This is so, because the AT&T has found it both impractical and uneconomical to always provide a fixed route for any particular service. This use of separate routings for video and audio emphasizes another problem, the difference in transmission speeds of signals in different media. Video signals,

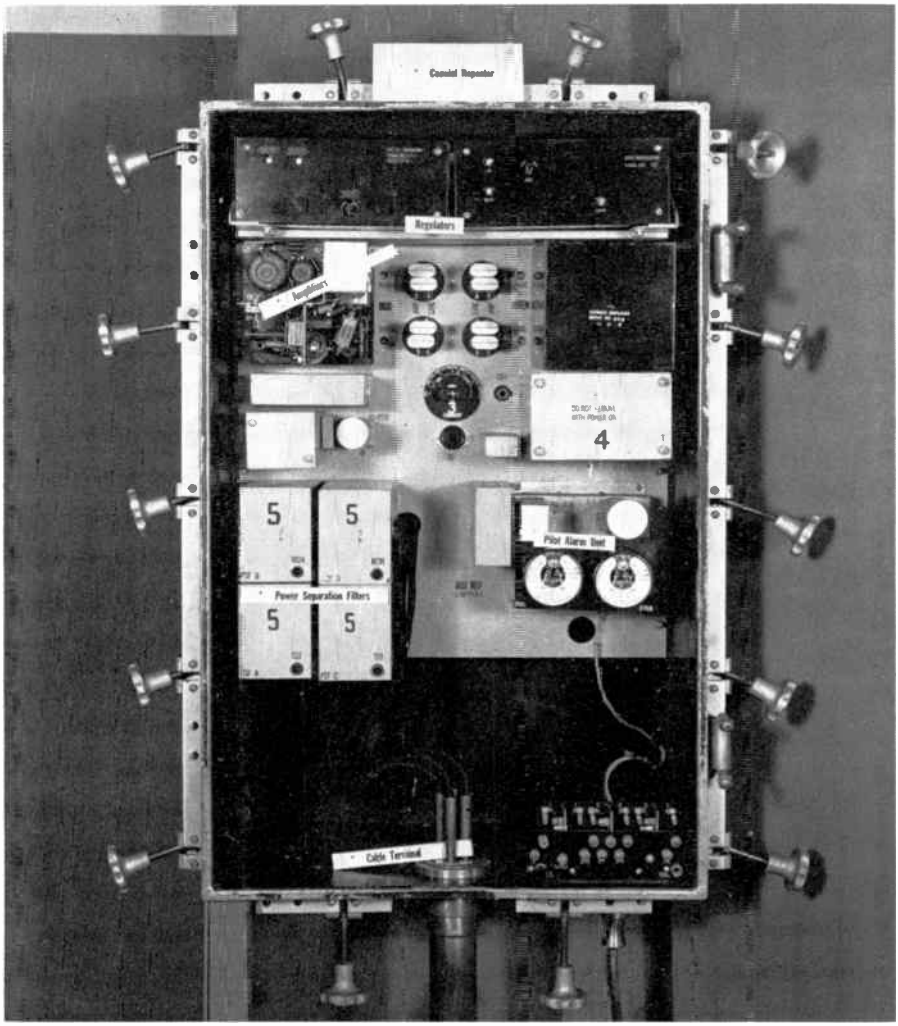

Figure 5.1A. Television coaxial-cable repeater as used on trans-continental network facilities. Courtesy A. T. & T.

whether via coaxial cable or radio relay, have propagation speeds closely approaching that of light. On the other hand, audio channel transmission speed is relatively slow when the usual loaded cable facilities are used. Although this is entirely practical for ordinary standard broadcast service, it is not tolerable for TV service since the sound portion would lag behind the video signal. Therefore, *carrier-current* systems are used to carry the sound portion of television programs. As a result, the audio signal is propagated along the wires at the same speed as the picture signals.

As discussed in Section 1.12, either coaxial cable or radio relays, or both, are used in network operations. In either case, the signal must be amplified at regular intervals along the route due to attenuation. This amplification takes place in what is known as a *Repeater.* Fig. 5.1A illustrates a repeater of the type used for coaxial cable routes. These

units accept the attenuated signal from the cable shown entering the bottom of the cabinet, and steps up the magnitude sufficiently to carry to the next terminal point. These units receive their AC power through pairs inside the cables themselves, and provide automatic switchover to a spare amplifier in case of trouble along one channel. It also sends an alarm back along the cable to indicate any trouble when it occurs.

Fig. 5.1B is a photo of a radio relay link consisting of radio-frequency transmitter and receiver circuits. Radio relay for AT&T network operation takes place in the radio spectrum from 3730 megacycles to 4170 mc. This provides 12 channels 40 mc apart. The exact channel assignments are shown in the table of Fig. 5.1C. Fig. 5.1D illustrates a typical RF relay route, and how the frequency assignments and station orientation is

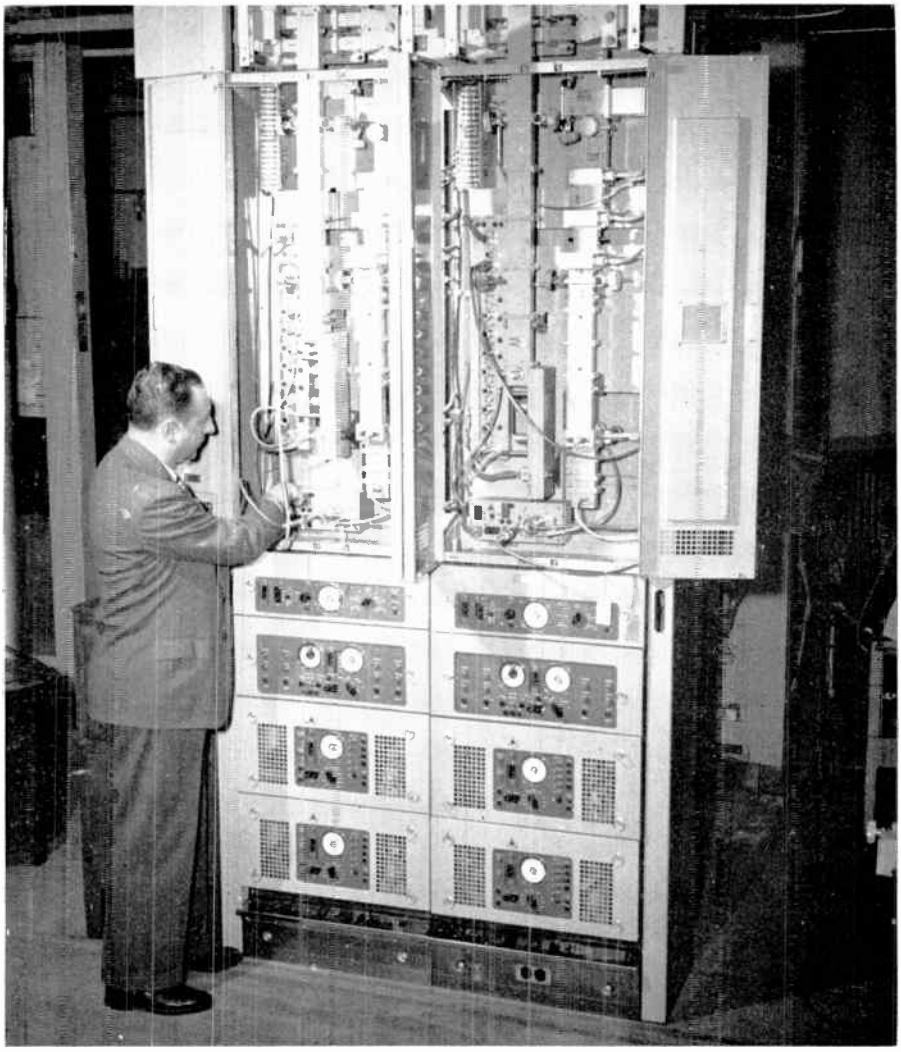

Figure 5.1B. Checking amplifiers at the New York terminal of the Bell System's New York-Chicago radio relay link. Courtesy A. T. & T.

BELL SYSTEM RADIO-RELAY TRANSMISSION FREQUENCIES

f1	3730 MC
f2	3770 MC
f3	3810 MC
f4	3850 MC
f5	3890 MC
f6	3930 MC
f7	3970 MC
f8	4010 MC
f9	4050 MC
f10	4090 MC
f11	4130 MC
f12	4170 MC

Table 5.1C.

made to eliminate any possible interference between sections of the route using the same frequencies.

5.2 *Basic Theory of Microwave Propagation*

TV transmission systems used for relay purposes of any kind work from about 2000 megacycles on up. Technicians concerned with such equipment must be familiar with the fundamental theory of electrons "bouncing" back and forth at these extreme rates.

In this region, as in the VHF and UHF television assignments, line-of-sight propagation must be taken for granted. The most outstanding difference in the microwave region is the large effect which even a small object exerts upon the waves due to their extremely short wavelength. Thus these waves are very efficiently "bounced" at an angle from a comparatively small reflector, thus effecting a "powerless relay" for "bending" a signal around an obstacle in the direct path to the receiver.

The basic formula for calculating the field strength of a TV signal for any line-of-sight path is as follows (an approximate relationship):

$$E = \frac{3.2ah\sqrt{W}}{d^2\lambda}$$

where:

E = field strength, microvolts per meter

a & h = heights, in feet, of the receiving and transmitting antennas respectively

W = power of the transmitter in watts (effective radiated)

d = distance from transmitter antenna and receiver antenna in miles.

λ = wavelength of the transmitted wave in meters.

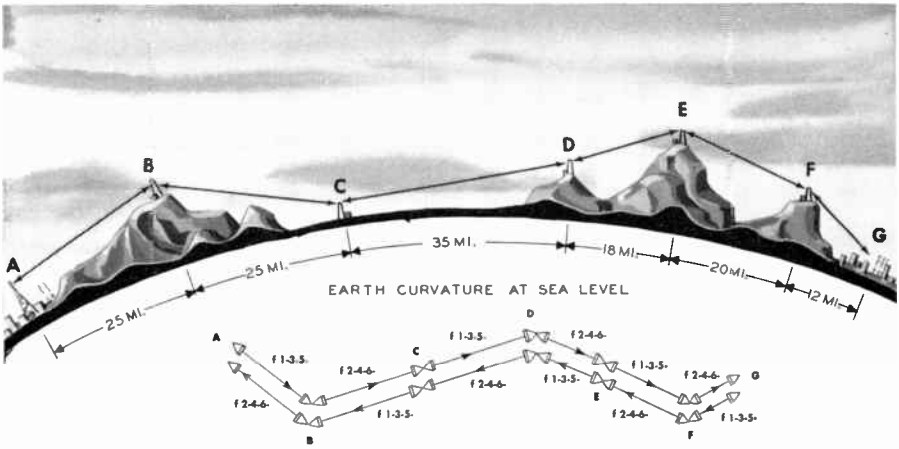

Figure 5.1D. The upper diagram represents a section of radio relay route, showing stations located to permit line-of-sight transmission. The lines between towers indicate direct radio paths, the span length being determined by considerations of attenuation, noise, and fading. Below is a corresponding map of the route, showing the two directions of transmission on separate beams. The route is zigzagged to avoid possible interference between sections using the same frequencies.
Courtesy A. T. & T.

Lets break this approximate relationship down and see what information may be obtained as to the interpretation of the factors involved. For one thing, since a, h, and W are in the numerator, it is apparent that the received field strength increases in direct ratio to the transmitter and receiver antenna heights, and the square root of the effective radiated power in watts. Conversely, the field strength is inversely proportional to the wavelength, and the square of the distance between the two antennas. Keeping in mind the relationship between wavelength and frequency (the shorter wavelength, the higher the frequency), it may be observed that the field strength at a given distance *increases* directly with the frequency.

Therefore it is rightly inferred that the higher the frequency of operation, the greater is the received field strength at any given line-of-sight point. Looking at it from a practical standpoint, however, it must be realized that the *higher the frequency, the less the efficiency* of the receiver circuits which must amplify the signal.

According to the opinion of engineers experimenting with UHF television signal propagation, the following characteristics are noted:

1. When hills or buildings are to be considered, the "shadows" are much deeper for UHF than VHF.
2. Due to the effects of comparatively small objects on signal deflection, the problem of ghosts in signal reception is emphasized.
3. UHF propagation varies with seasons more than is apparent at VHF. Some of this varience is due to trees, brush, etc.
4. A simple half-wave dipole picks up 20 db less signal at 600 mc than at 60 mc simply because it is 1/10th the size. Due to dimensions, however, high gain can be achieved on UHF by stacking of elements.
5. At the time of this writing, there is from 8 to 20 db greater internal set noise in UHF receivers over VHF receivers. This condition will improve with advancements in design.
6. There is less interference from man-made noise on UHF than VHF.

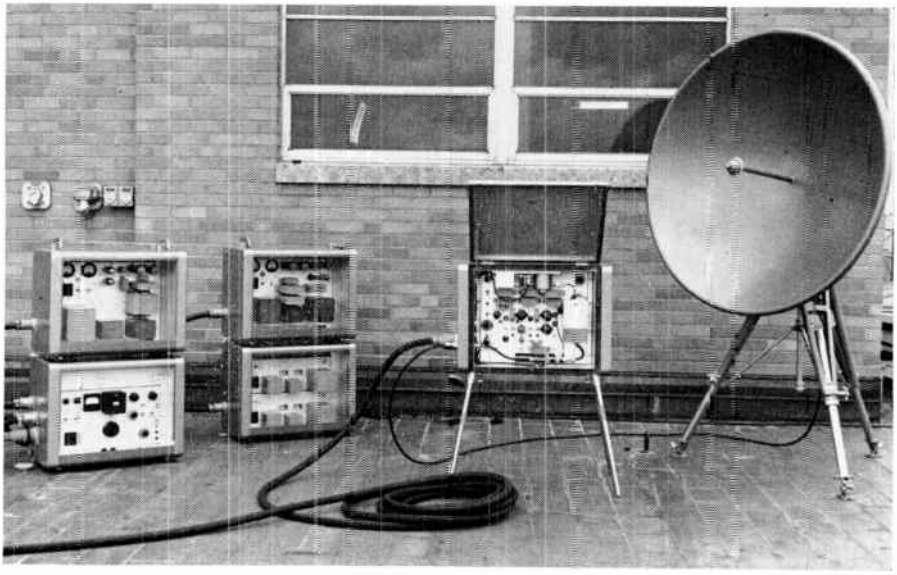

Figure 5.2A. Transmitter equipment for microwave relay system. Courtesy General Electric.

In television relay practice, the signal wave is concentrated into a narrow beam to allow exact control in "aiming" the signal toward the receiver, and to obtain a high *power gain.* TV relay transmitter and receiver antennas take the form of a radiating element surrounded by a reflector in the shape of a parabola. (Details of commercial equipment are given in Chapter 9.) Fig. 5.2A shows a transmitting antenna of this type as used in the General Electric Microwave Relay Equipment.

The greater the area of such a parabola in ratio to the wavelength, the greater the gain. The basic power gain formula for a system using a parabolic reflector is expressed:

$$\text{Power Gain} = \frac{4\pi a}{\lambda^2}$$

where (a) is the *effective area* of the parabola. Since it is easier to ascertain the *projected area* of a parabolic reflector, and since the projected area is approximately 0.65 times the effective area, we may express an approximate relationship:

$$\text{Power Gain} = \frac{4\pi A}{\lambda^2} \times 0.65$$

where (A) is the projected area of the reflector. This results in only a very slight error so long as the wavelength is small compared to the diameter of the parabola, as is the case in practice. Thus, for example, the RCA microwave antenna operating in the 6800-7050 megacycle range obtains a power gain of 5000 with a 4 ft. reflector, and a power gain of 11,500 with a 6 ft. reflector.

The television operator will encounter the term "half-power beamwidth" in manufacturer's literature concerning one characteristic of the parabolic antenna. For example, a certain 6 ft. "dish" may have a half-power beamwidth of 5 degrees, or a 4 ft. dish may be rated at 8 degrees half-power beamwidth. The beam width is defined in terms of the angle through which the dish must be rotated in order to reduce the power available at the receiver terminals to ½ the maximum value. Thus if the dish is orientated at dead center of the incoming beam giving maximum power, and is then rotated in one direction until the power is ½ maximum value, *twice* this angle (to get the total angle both sides of maximum) is the half-power beamwidth.

A 4 ft. reflector in the RCA system in the 7000 mc beam has a half-power beamwidth of approximately 3 degrees. In the General Electric system which operates in the 2000 mc band, a 4 ft. dish has a half-power beamwidth of about 8 degrees. A 6 ft. dish in the 2000 mc band results in a half-power beamwidth of around 5 degrees. Thus it is observed that the higher the power gain, the narrower the beam, calling for careful orientation when the equipment is set up.

Quite often, the operator in the field department of the TV station is called upon to give an opinion as to the practicality of relaying a signal from some given remote point direct to the pickup receiver at either studio or transmitter location. As discussed in section 1.14, the distance to the horizon is based upon the fundamental formula:

$$D = 1.23\sqrt{H}$$

where D = distance to horizon in miles, and H = height of transmitter antenna in feet. Thus if the antenna may be placed 100 feet high, the theoretical distance to the horizon (line-of-sight) is 12.3 miles. However, if it is possible to raise the receiver antenna to 100 feet, then from the equation:

$$D = 1.23\ (\sqrt{H_T} + \sqrt{H_r}$$

where H_T = height of transmitter antenna and H_r = height of receiver antenna, the effective line-of-sight path becomes 24.6 miles.

Since the preceding basic formulas assume a flat surface, modifications for practical application consider the curvature of the earth and the profile elevations along the projected route of signal propagation. Maps are available showing elevation contours (height above sea-level) at as little as 10 foot elevation intervals. (From local Geodetic Survey Offices.) Therefore, unless the

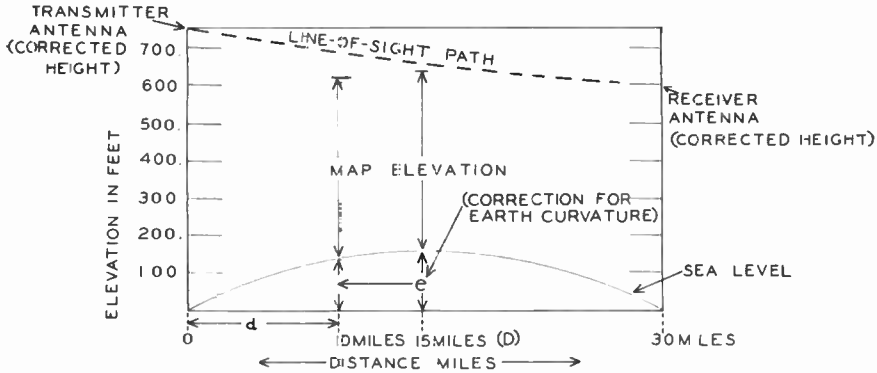

Figure 5.2B. Correction for earth curvature in estimating line-of-sight paths.

proposed pickup point allows distinct line-of-sight service as observed with the eye, the engineer cannot give a definite opinion until these additional factors are considered.

Fig. 5.2B illustrates the basic information to be analyzed. The height above sea level for the transmitter antenna is first ascertained from the map, or from a sensitive type altimeter as used in modern airplanes. For distances of over 10 miles, and where the receiver antenna cannot be seen by the eye or through fieldglasses, this height must be corrected for the curvature of the earth. This correction (e in feet shown in Fig. 5.2B) may be closely approximated by the following relationship:

$$e = \frac{(D)^2}{(1.23)} - \frac{(D-d)^2}{(1.23)}$$

where e is the elevation correction in feet, D is ½ the distance between terminal points, and d is the distance in miles from the terminal to the point on the propagation path being calculated.

Assume, as shown in Fig. 5.2B that the pickup point is 30 miles from the proposed receiving point. Assume also it is desirable to find the correction for curvature of the earth at 10 miles from the transmitter. Using the above formula:

$$e = \frac{(15)^2}{(1.23)} - \frac{(15-10)^2}{(1.23)} =$$

$$182.9 - 20.3 = 162.6 \text{ ft. (Approx.)}$$

Therefore, if the map elevation shown at that point is (for example) 500 feet, these two values added together give approximately 662.6 feet total elevation. (In relation to the transmitter antenna.) If this point on the map is in the area of a large city, the height of the tallest obstructions must be added to this total elevation. In this manner, the necessary height of the transmitter antenna may be estimated. It then remains as to whether this height may be available at the proposed pickup. In practice, the line-of-sight path should be close to 100 feet over the highest estimated obstacle in the beam to the receiver.

In the above example, if the transmitter point were 600 feet above sea level, and the receiver antenna was 600 feet above sea level, the transmitter antenna would necessarily be placed upon a building or structure 150 feet above ground, to obtain the required 750 foot elevation. This is indicated from graphical analysis as in the figure, and in practice buildings, trees, etc., would add to the correction. This is detailed further in Chapter 9.

It is quite often possible in practice to bypass direct obstructions in the path by "powerless relays" which simply means any suitable surface which will "bounce" the wave at the proper angle to reach the receiver antenna. When no such surface actually exists, engineers may erect a highly efficient sheet for

such purpose. Such methods are described in Chapter 9.

At radio frequencies above approximately 300 megacycles, special techniques must be applied in getting the RF energy from unit to unit, or amplifier to antenna. The entire UHF band, as well as the microwave region, uses specially designed connection devices for transferring the RF signals. Although it is not important that the TV operator understand all of the theory associated with transmission lines and "wave guides," he should be familiar with the fundamentals so that the major elements of mystery in such devices are removed.

Ordinary transmission lines are practically unusable on such frequencies due to the severe attenuation along the line. This occurs because of the high series inductance and low shunt capacitive reactance between inner and outer conductors. Although this problem has been solved by the development of a special transmission line for transmitters through the UHF range (described later in this chapter), *waveguides* are used at the microwave frequencies of TV relay operation.

A waveguide is a hollow metallic tube, usually rectangular in shape although it may be round or oval. Its purpose is to pass high radio frequencies within the boundaries of the tube with minimum of attenuation. The reader is aware that when radio waves are radiated into free space, an electromagnetic and electrostatic field exists at the point of propagation, or antenna. When this energy is directed into an ordinary transmission line, the lower frequency energies are evenly distributed throughout the conductors as in free space. At UHF and microwave frequencies, however, most of the current is concentrated on the outer surface of the conductor (skin effect), and a high resistance is presented to the passage of this current through the line. In waveguides, the dimensions of the tube are such that the concentration of energy takes place in the center, with very little electric field existing at the walls.

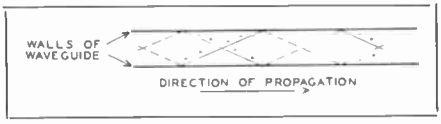

Figure 5.2C. One electrostatic field along waveguide (looking down on waveguide from top). The fields cancel along the walls and add through center of tube, eliminating "skin effect" at the high frequencies concerned in waveguides.

This feature is emphasized by observing Fig. 5.2C. This illustrates the electrostatic field along two wavepaths, and how the positive maxima and negative maxima meet at the walls, effectively cancelling at these points. The positive maximum and negative maximum meet at the center of the tube, adding to the field of force through the center.

The engineer encounters terms such as TE and TM, with various subscripts such as TE_{01} and TM_{01} in literature concerning waveguides. TE stands for *transverse electrostatic* mode of operation, and TM stands for *transverse magnetic* mode of operation. It should be recalled that all radio energy contains both electrostatic and magnetic fields, which are at right angles to each other. When the electrostatic field is as shown in Fig. 5.2D(1), that is, across the guide or transverse to the direction of propagation, the TE mode is designated. When the magnetic field is transverse to the direction of propagation as in Fig. 5.2D (2), the TM mode is designated. The mode of operation is determined by the manner in which the rf energy is fed into the waveguide. It is noted that when

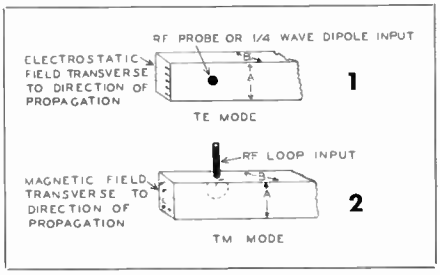

Figure 5.2D. Illustrating how the method of introduction of the RF energy determines the mode of operation.

the rf is fed by a probe or ¼ wave dipole in the manner shown in Fig. 5.2D(1), the TE mode results. When fed by a loop in the manner shown in Fig. 5.2D(2), the TM mode results. Power is extracted, depending upon the mode of operation, in the same way.

The subscripts O and 1 designate the number of half-wave patterns of the electrostatic field along the (B) and (A) sides of the structure. The subscript O refers to the short (B) side, and the subscript 1 refers to the long (A) side. The frequency at which dimension (A) is ½ wavelength is termed the *cutoff frequency*, and therefore determines the lowest frequency that may be propagated by the waveguide. Frequencies higher than this cutoff frequency are readily passed. However, if the frequency is very much higher, other modes of operation such as TE_{11} or TM_{11} occur. This simply means that more than one half-wave patterns occur across the tube. In practice, the operator will find that these higher modes of operation are not used in TV relays, and TE_{01} or TM_{01} modes are predominate. The short (B) side is ½ the dimension of the (A) side. A waveguide used for the 2000 megacycle band is approximately 3" x 1½" and for the 7000 MC band approximately 1" x ½".

A waveguide, just as any type of transmission line, may be used as a resonant circuit, or to present inductive or capacitive reactance. A line less than ¼ wavelength and shorted at the end looks inductive at that frequency, and capacitive if left open. Such practice is often followed in tuned transmitter stages in the UHF and microwave bands. Table 5.2E illustrates the characteristics of transmission lines as tuned circuits or reactive elements.

Tuned circuits for microwaves, however, generally take the form of *cavity resonators*, the frequency at which resonance occurs being dependent upon the size and shape of the cavity. In practice

TERMINAL AT RECEIVING END	LESS THAN $\lambda/4$	EXACTLY $\lambda/4$ OR ODD MULTIPLES	$\lambda/4 - \frac{\lambda}{2}$	EXACTLY $\lambda/2$ OR ANY MULTIPLES
SHORT CIRCUIT		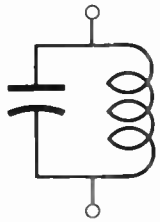		
OPEN CIRCUIT				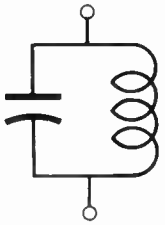

Table 5.2E. Transmission lines as tuned circuits or reaction elements.

these cavities are designed into the tube itself. A very predominate type of tube used for TV microwave transmitters and receivers is the reflex Klystron. In the RCA TV relay system, a Klystron frequency modulated with the video signal constitutes the entire carrier portion of the transmitter. At the receiver, the Klystron is used as the local oscillator to obtain the intermediate frequency. General Electric microwave relay systems use essentially the same method.

The reflex Klystron tube has a single resonant cavity, one pair of opposing walls constituting the frequency-determining characteristic, the other pair of opposing walls affecting the "Q" and impedance of the resonant circuit. It is recalled that in conventional tubes with negative grids, the ideal operating characteristics are: constant velocity stream of electrons from cathode to plate, varied in intensity by a variance of the grid bias according to the signal voltage applied. At extremely high frequencies, however, such action becomes practically impossible due to the transit time of the electrons from cathode to plate. This difficulty becomes increasingly evident in the larger tubes for handling large power outputs. The electrons which traverse the grid during the negative swing of the signal voltage are slowed down, and those which traverse the grid region during the positive signal swing are speeded up. Thus the electrons reach the plate at random speeds, decreasing the efficiency of the tube in accomplishing any amplification of the applied signal. The Klystron tube design is such as to use the applied signal to do this very thing; i.e., the input signal is used to control the *velocity* of a *constant current* beam, instead of attempting to vary the intensity of a constant velocity beam. Such a tube may be used either as an amplifier or oscillator. In Klystron oscillator tubes, a feedback loop is provided to start and sustain oscillations.

Fig. 5.2F illustrates the type of 2K26 Reflex Klystron, as used in the RCA television microwave relay systems. The

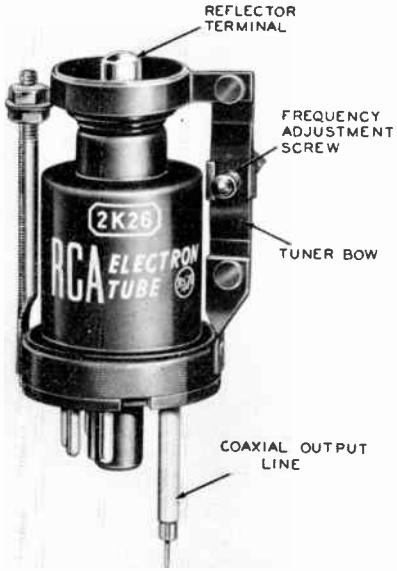

Figure 5.2F. Courtesy RCA.

cavity is designed for resonance in the 6250 to 7060 megacycle range. Electrons bouncing back and forth in this cavity pass through several "grid-like" structures into a "drift space," which is terminated in the reflector electrode shown. The resonator is operated at approximately 300 volts positive, and the reflector electrode at around minus 100 volts. Thus the electrons are reflected back into the resonator, resulting in a "bunching" effect of the electrons, sometimes referred to as "velocity modulation." The resultant RF oscillations are extracted by a probe in a ¾ x 1½ inch waveguide, fed to the coaxial output line (Fig. 5.2F) through a wide-band coaxial transducer coupling unit. This coupler efficiently couples the coax output line to the wave-guide. The socket through which this line passes is the same as an ordinary octal socket, with the No. 4 pin position drilled out a sufficient amount to accommodate the line and transducer coupling. The entire assembly is only 3½ inches high.

Although the reflex Klystron is designed for a particular band of operation, both mechanical and electrical tun-

ing within this range is available. The "tuning bow" shown in the illustration allows a slight change in the resonator-gap spacing. A flexible diaphragm in the form of a flat disc constitutes one wall of the resonator just below the reflector cap. Thus a rotation of the frequency adjustment screw clockwise or counter-clockwise changes the effective dimensions of the cavity resonator with resultant change in frequency. Electronic tuning over a vernier range is obtained by adjustment of electrode voltages. Details of operation of the reflex Klystron are given in Chapter 9.

The 2K26 Reflex Klystron has a useful power output of 100 milliwatts in the 7000 megacycle range. As brought out previously, the use of a 4 ft. reflector results in a power gain at these frequencies of 5000, giving an effective radiated power in this case of 5000 × 0.1 or 500 watts. Use of a 6 ft. reflector (power gain 11,500) gives 1150 watts of effective radiated power.

Reflex Klystrons for operation in the lower frequency microwave bands (2000 mc) may be of larger construction hence of greater power-handling capabilities. For example, the GE telelink system operating in the 1990-2110 mc band uses the type SRL-7C Reflex Klystron with an RF power output between 5 and 10 watts. This power is stepped up in a 6 ft. antenna dish to an effective radiated power approaching 10,000 watts; the gain being close to 1000 in the 2000 mc band.

Still higher power outputs may be obtained by the use of magnetron oscillators. The Raytheon Model RTR-1A relay equipment uses a QK-174A internal cavity magnetron oscillator giving an RF power output of 50 watts.

Regardless of band of operation or type of oscillator circuit used, microwave relays differ from ordinary TV transmitters in that the video signal is frequency modulated instead of amplitude modulated. In the Raytheon system just mentioned, 100% modulation is referred to a 7.5 mc frequency swing (±3.75 mc). In the GE system, a 10 mc total swing (±5 mc) constitutes 100% modulation while the RCA system relates this value to ±10 mc, for a total frequency swing of 20 mc.

The above types of relay systems are often used as STL (studio-to-transmitter links) for the video signal. For the sound portion of STL transmission, a number of channels 0.5 mc wide in the 890.5 mc to 910.5 mc are provided.

5.3 *Principles of TV Transmitters*

All commercial TV transmitters have certain characteristics in common regardless of make or band of operation. Some of these characteristics are determined by Standards of Good Engineering Practice as issued from time to time by the FCC (Chapter 11). Other characteristics are those set by the manufacturers themselves through mutual agreement of their coordinating organization, the Radio & Television Manufacturers Association (RTMA). A listing of these common features serve as a good introduction to the study of TV transmitters. (Review also section 1.14.)

VISUAL TRANSMITTERS. All video transmitters are rated in terms of their *peak power* output. Thus if a 5 kilowatt video transmitter is specified, this indicates that it is capable of putting 5kw of peak power into the transmission line, with minimum of distortion. In practice, the *average* power output is first measured with a dummy load of substantially zero reactance, and resistance equal to the surge impedance of the transmission line to be used, and the transmitter modulated by the *standard black* television signal. The average power thus determined is multiplied by the factor (1.68) to obtain the peak power output. Methods are described in Chapter 11. Some control, either manual or automatic is provided to adjust the peak power output within definite limits over the operating day.

All video transmitters in the VHF and UHF bands are amplitude modulated by the picture and control pulse signals. The term 100% modulation refers to the maximum carrier amplitude on sync peaks. The blanking (pedestal) occurs

at 75%, ±1% of the peak amplitude for any fixed picture content (such as a test pattern), and within ±2.5% for a variation of picture content as occurs during regular program transmission. The carrier reference white level amplitude occurs at 12½%, ±2.5%, of the peak carrier amplitude. Thus maximum white level occurs between 10% and 15% of peak carrier amplitude. Overshoots in white signals should be avoided, since the resulting carrier cut-off causes severe buzz and noise in intercarrier type receivers.

The polarity of the transmitter input picture signal is black negative. With a minimum of 1 volt and maximum of 2.5 volts peak-to-peak across the standard input impedance of 75 ohms.

The polarity of the transmitter output signal is black positive (negative modulation, section 1.14) into the standard video transmission line of 51.5 ohms. The picture signal monitor output connections provide a black negative signal with an amplitude of 0.5 to 2.5 volts peak-to-peak across a resistive impedance of 75 ohms.

The frequency of operation of both video and aural transmitters are maintained within ±0.002 percent of the assigned frequency. Thus the video carrier in the channel 1 assignment of 54.60 mc has an assigned carrier of 55.25 mc which must be maintained within ± 1105 cycles per sec. On channel 13, the video assignment is 211.25 mc, which must be kept within ±4225 cycles per sec. After April 1st, 1953, the visual carrier must be maintained within one kilocycle of the authorized frequency, and the aural carrier within 4 kc of the assigned frequency, or, alternatively, 4.5 mc above the actual visual carrier frequency within 5 kc.

TELEVISION AURAL TRANSMITTERS. All TV aural transmitters are rated in terms of their actual RMS power output, when working into the antenna system or equivalent dummy load. The radiated power from the antenna system is never less than 50%, nor more than 150% of the peak power radiated by the visual transmitter. The most common practice is to use an aural radiated power of 50% of the peak visual radiated power.

The operating power of the aural transmitter is determined by the *indirect method*. This means that the power input to the final stage is found by multiplying the plate voltage and plate current, then applying a known efficiency factor to determine the power output, as:

Power Output to Transmission Line $= E_p \times I_p \times F$ where $F =$ efficiency factor as supplied by all manufacturers for that particular transmitter. For example, assume a plate voltage of 3000 volts, drawing 0.5 ampere plate current, with an efficiency factor (F) as supplied by the manufacturer for that particular transmitter and frequency of 0.70. The power output is then:

$3000 \times 0.5 \times 0.7 = 1050$ watts power output. In practice, this power as well as the peak power of the picture transmitter is stepped up to a higher value by the power gain of the antenna system. The output power from the antenna is termed the *effective radiated power*.

A more practical application of the indirect method of measuring power, from the operator's point of view, is determining the necessary amount of plate current required for a given plate voltage and power output. Thus he is able to determine how much he must "load up" the output stage by coupling adjustments to the transmission line. For example, if 1000 watts is required into the transmission line, and the plate voltage is 3000 volts, the required plate current for an efficiency (F) of 0.7 is:

$$I_p = \frac{P_o}{E_p F} = \frac{1000}{3000 \times F} = \frac{1000}{2100} = 0.476 \text{ amperes.}$$

All TV aural transmitters are frequency modulated, 100% modulation being referred to a swing of ±25 kc. The standard 75 microsecond pre-emphasis is employed in the audio circuits ahead of modulation, as in regular FM broadcasting. This is discussed more fully in Chapter 11. The term *frequency swing*

refers to the swing back and forth through the center frequency (assigned frequency of the aural carrier) due to modulation. The term *frequency deviation* is the drift from the assigned frequency (center frequency), and this drift must be maintained within ± 0.002% of the assigned frequency. After April 1st, 1953, the aural carrier must be maintained within 4 kc of the assigned freqency, or, alternatively, 4.5 mc above the actual visual carrier frequency within 5 kc.

The audio input impedance is either 600 or 150 ohms. A level of approximately +10dbm applied to the input terminals is sufficient to cause 100% modulation. DBM refers to decibels above 1 milliwatt of power in 600 ohms when a single-frequency pure sine-wave is applied. Due to the great difference between peak factors of program waves and sine-waves, actual program level input for 100% modulation during program transmission is less than zero db. This is discussed fully under operations in Chapter 12.

The audio and video outputs of the two transmitters are most usually fed to a common antenna through a diplexer unit (section 1.14) to avoid interaction between the separate outputs. Only one complete sideband of the video carrier is fed to the antenna, with a vestige of the other sideband in accordance with the FCC curve shown and discussed in section 1.14. Strictly single-sideband operation was ruled out some years ago due to the inferior results obtained by the combined carrier and demodulator action.

The most outstanding difference in video transmitters of various manufacturers is the means of obtaining this vestigial sideband characteristic. (Review section 1.14.) When the transmitter is modulated in the final stage, the vestigial sideband filter must be used between the final power amplifier and transmission line to remove all except the proper vestige of the lower sideband. In this case, all radio-frequency stages prior to the final stage are narrow-band circuits which are tuned in the orthodox

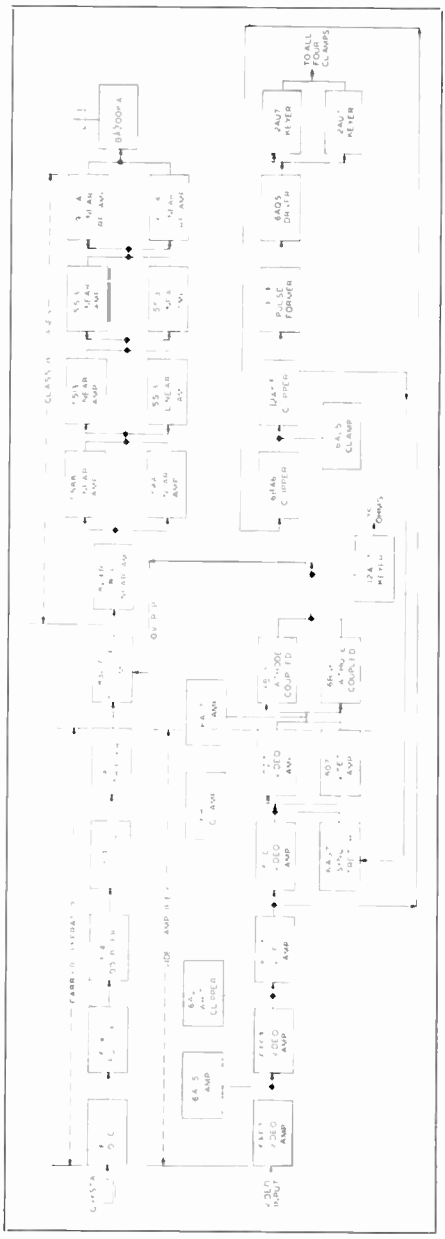

Figure 5.3A. Block diagram General Electric TT-6-D video transmitter for VHF Channels 7-13.

manner of adjusting for minimum plate current, indicating resonance. In other types of transmitters, however, where the video modulation takes place in a low power stage, the following class B

linear amplifiers must be tuned in a special way so that linear amplification of the upper sideband is achieved while attenuating the lower sideband 20db at a point 1.25 mc below the assigned video carrier frequency. Since this is an unorthodox method of tuning as applied to radio transmitters, the fundamentals will be described here. The subject is elaborated in Chapter 11.

Fig. 5.3A is a block diagram of the General Electric Type TT-6-D video transmitter designed for operation on channels 7-13 in the VHF band. It is noted that the exciter unit consisting of the 6J5 crystal oscillator and multiplier stages are of the conventional narrowband type, with orthodox tuning procedure. The output of the video amplifier is introduced into the 832 stage, which is the modulated stage in this transmitter. All following amplifiers are push-pull RF linear amplifiers which must perform the dual function of providing linear increase in power with standard attenuation of the lower side-band. Fig. 5.3B is the simplified schematic of the modulated stage and the following linear amplifiers, showing method of circuit tuning which is accomplished by the use of three-quarter wavelength lines. Fig. 5.3C illustrates the tuning principles of such circuits, which are used commonly in the high-band on VHF, as well as UHF and microwaves. Tuning controls are brought out to the front panel of the transmitter. All stages following the 1st linear amplifier are grounded-grid operated. The operator will find that nearly all video transmitters use this circuit arrangement in the higher power stages. Grounded grids result in less output shunt capacitance and require little or no neutralization. The net result is a higher output power from a given triode operating grounded-grid over that obtainable from the more conventional grounded cathode circuit, at high frequencies.

The output of any plate modulated television stage is approximately 8 megacycles wide, since this stage contains both sidebands of the amplitude modulated signal. The bandwidth required of the remaining linear stages is 4¾ mc in order to produce the vestigial sideband characteristic specified in the standards. The purpose of the tuning procedure in such circuits is to adjust the bandpass of the series of linear amplifiers much as IF alignment of a TV receiver is accomplished. This procedure requires a variable frequency sweep generator and an oscilloscope in conjunction with a detector device such as a vacuum tube or crystal. In the General Electric transmitter being discussed, the sweep generator is built-in as is the crystal detector, which is across the transmission line terminals at the transmitter output. (Point (1) Fig. 5.3B.) It is only necessary to plug the 'scope into the proper jacks appearing on the panel. Details of preliminary adjustment of the sweep generator as well as the entire procedure are given in Chapter 11. The reader should be familiar with the fundamentals described below, however, before this detailed explanation is undertaken. The sweep generator is essentially an oscillator with a center frequency approximately that of the carrier assignment, which is swept through a band approximately ±6 mc by a motor-driven capacitor across its plate tank circuit. Two marker pips are provided to indicate points 4 mc above and 0.75 mc below the carrier. Output receptacles are provided on the sweep generator panel to allow patching cables which may route the signal to the required input receptacles of the various stages as described below.

Three tuning controls appear on the front panel for each stage; plate tuning, cathode tuning and cathode loading. In the initial alignment, the final power amplifier stage is adjusted first. The output of the sweep generator is fed to the plate circuit of this stage at point (2), Fig. 5.3B. This constant amplitude RF voltage is impressed across the 50 ohm terminating resistors shown in the circuit associated with these terminals. Coupling is made into the plate circuit by the two low capacity high voltage parallel plate capacitors (3). These capacitors are approximately ½ mmfd

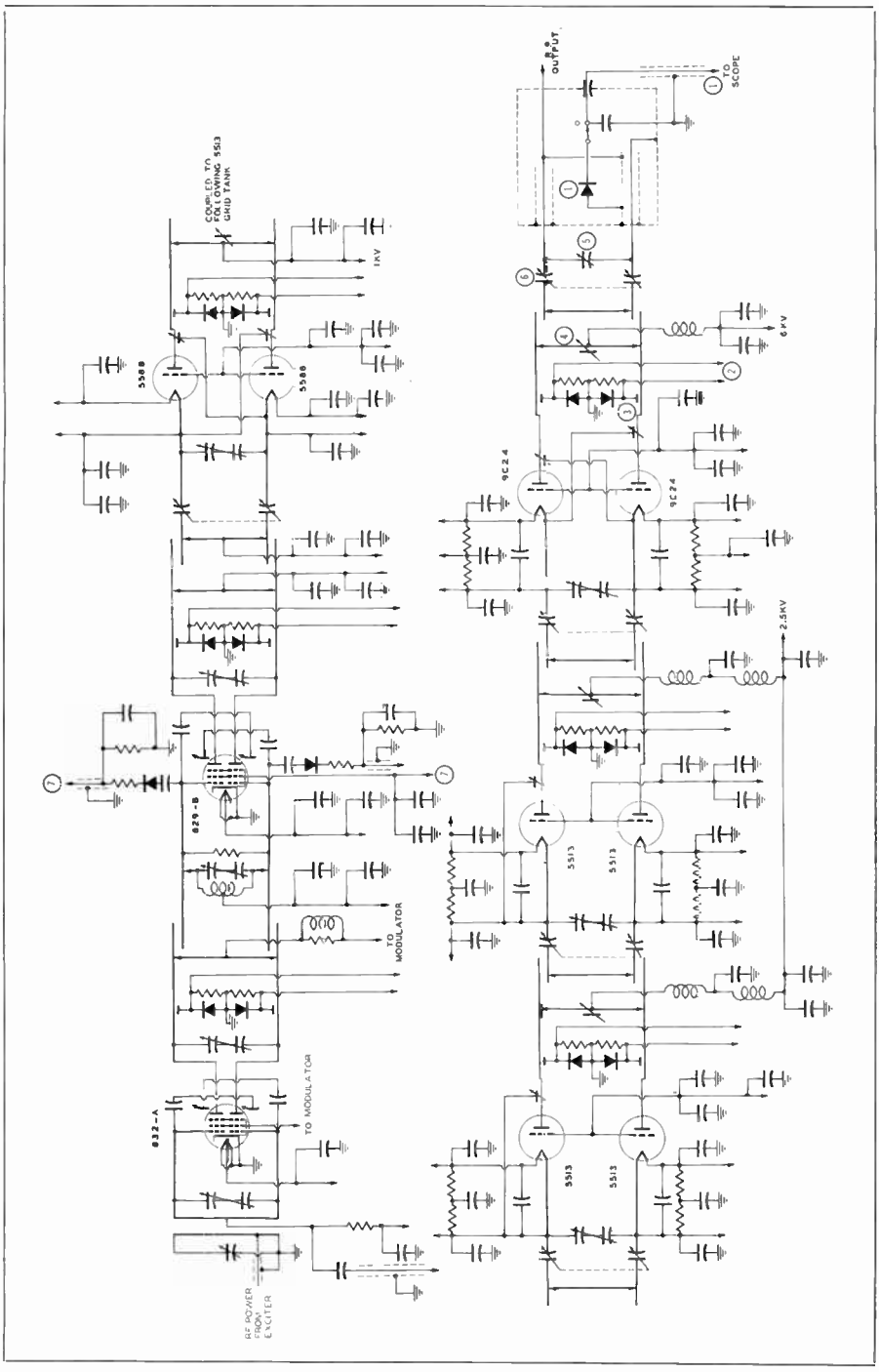

Figure 5.3B. Simplified schematic of modulated RF stage and linear power amplifiers in General Electric TT-6-D video transmitter. Courtesy General Electric.

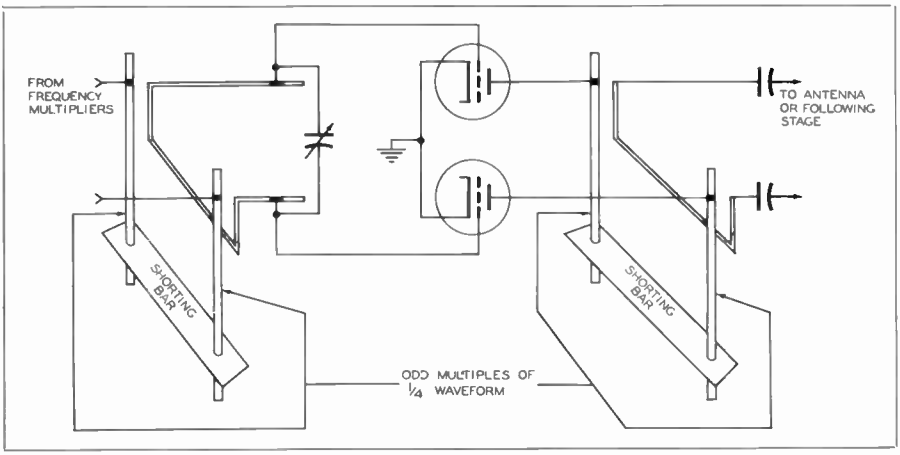

Figure 5.3C. Basic principle of tuned line amplifier.

each and have minute effect on the total output capacity of the stage. Plates of the capacitor are very widely spaced to safely withstand both the DC and RF voltage appearing between the tank circuit and ground. It is noted that a similar arrangement is provided on each of the linear stages back through the chain of amplifiers.

With the sweep generator operating, the constant amplitude RF is swept through the band of ±6 mc of the carrier frequency, and the bandpass characteristic is observed on the oscilloscope connected to jack (1). The plate tuning (4, Fig. 5.3B) control (with very loose output loading) is first adjusted so that a spiked curve appears half-way between the two markers as in (1) of Fig. 5.3D. The reader should recognize this curve as a sharply tuned circuit of narrow bandwidth, as in a loose or "undercoupled" transformer. The output tuning control (shunt capacitor (5) of Fig. 5.3B) is then adjusted to give an overcoupled bandpass curve as in (2) Fig. 5.3D. This type of bandpass is too wide, with excessive attenuation in the middle region. Therefore, to obtain the desired response curve of (3), Fig. 5.3D, the loading control (series capacitor (6) Fig. 5.3B) is gradually adjusted while maintaining at the same time equal height of the two humps by readjustment of the tuning (5) control, until the dip in the center of the bandpass decreases. As this occurs, a simultaneous decrease in total bandwidth results. At the proper value of output loading, both bandwidth and center dip are correct.

It is recalled that the markers indicate 0.75 mc below and 4 mc above the carrier frequency, indicating the proper bandpass of 4¾ mc *if* the markers are finally positioned as in (3) of Fig. 5.3D. If, after the above procedure, the entire bandpass is displaced in frequency in either direction, the plate tuning capacitor must be adjusted slightly in the direction which correctly positions the entire bandpass. When this is done, however, one hump will be lower than the other. Therefore it is necessary to readjust the output tuning control until balance of the slight humps occurs.

The above procedure is repeated for each of the lower power stages, leaving the scope connected on the same transmission line crystal diode. The final stage output is left undisturbed in all following alignment adjustments. It is noted from the simplified schematic of Fig. 5.3B that the three circuit controls described above are duplicated in each stage, the only difference being that the center dip on the curve traced out is greater by the amount introduced in the adjusted stage. Approximately 3% dip is normal for the output stage only. Therefore the accrued dip for 5 stages

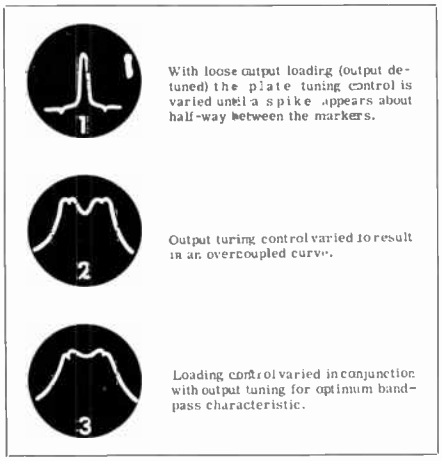

Figure 5.3D. Fundamentals of tuning procedure in low-level modulated TV transmitters.

will result in a final trace of 15% dip. A dummy antenna is always used in initial tuning procedures. Since full plate voltages are on the stages that have been aligned, normal reaction is present on the stage under adjustment.

It should be noted that after this initial adjustment upon installation of the transmitter, such procedure is not a part of daily operations or maintenance schedules. However, due to changing of tubes and inevitable changing of circuit constants over long periods of time, such adjustments will have to be made, and all transmitter personnel should be familiar with such procedures for the particular transmitter involved. Complete checks should be made at a minimum of twice a year. Many stations require the maintenance personnel to practice this procedure every few months, since quite often troubles may be foreseen and corrected in this manner. More about this in Chapter 12.

Since video modulation in this type of transmitter occurs in a very low power stage with small tubes, plate modulation may be used. (Section 1.14.) Such modulation is used in the above transmitter, as indicated in Fig. 5.3B. With plate modulation it is necessary that the modulated stage output circuit be tuned to the full double bandpass characteristic of 8 mc. Provisions for measuring this bandpass are provided by a pair of receptacles (7) Fig. 5.3B where the external scope is connected. Two crystals, one on each side of the first amplifier input circuit, rectify the RF signal on the grids and the scope trace displays the amplitude characteristic of the intercoupling circuit between the modulated stage and this first amplifier. The video signal is clamped at the point shown in the block diagram of Fig. 5.3A, and coupled to the modulated stage through the cathode followers shown. These couple both AC and DC components of the signal and supply the plate power for the modulated stage. This provides the DC restoration of the video signal.

All video transmitters use a *sync stretcher* circuit. The basic theory of this type of circuit was presented in section 3.7. In addition to the inevitable sync compression which occurs in interconnecting lines and amplifiers, another factor is a major reason why such a circuit is a necessity in the transmitter. This factor is due to the inherent nature of the modulation characteristic itself. It is recalled that the blanking level must be 75% of peak sync at the output of the transmitter. This same relative level of 75% blanking and 25% sync is fed to the transmitter input from the output terminals of the studio. Since in practice the carrier never goes to zero value (maximum white level is 10%), there is a "minimum carrier" level

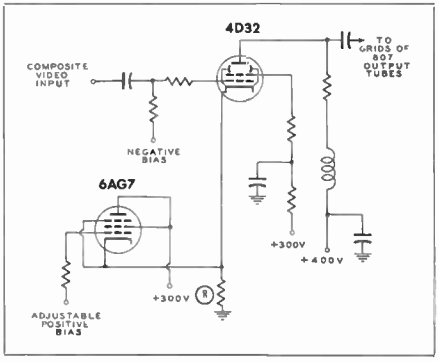

Figure 5.3E. Modulator sync stretching circuit of General Electric TV transmitter.

which, added to the composite video signal (even assuming perfect linearity) results in a final modulated output containing a blanking level greater than 75%. This is equivalent to compression in the sync region.

The basic sync stretching circuit of the GE transmitter is illustrated in Fig. 5.3E. Its function is to increase the proportion of sync in the modulator so that the blanking level in the RF output may be adjusted to exactly 75% of peak sync. The 6AG7 sync stretching tube has its cathode connected across the cathode resistance R, common to both tubes. During the picture portion of the signal, the 6AG7 is below cut-off since its cathode is too far positive to allow conduction. (Equivalent to class C operation.) The composite video signal input to the grid of the 4D32 tube is black negative polarity. Therefore when the signal swings into the sync region, the grid of the 4D32 becomes more negative, and both cathodes drop toward ground potential. This allows the 6AG7 tube to begin conduction, and the added current through R increases the negative bias of the 4D32 still further, producing a higher positive voltage in the output circuit during the sync region of the signal. The positive bias on the sync stretching tube grid is adjustable from a control on the transmitter operating console, allowing the operator to properly adjust the amount of sync stretch.

Fig. 5.3F is a photo of the aural and first visual cubicle of the GE transmitter described above, showing the general orientation of controls and chassis arrangements. Commercial television transmitters are arranged for utmost convenience in operations and maintenance, and all major components are stamped by number either on the component itself or on the chassis adjacent to it. Thus the operator may easily acquaint himself with the location of parts as correlated with the schematic diagram, aiding immeasurably in becoming mentally prepared for emergencies when they occur. Helpful hints for meeting transmitter emergencies are included in Chapter 12. The first and fundamental rule for mental preparedness is this: THOROUGHLY DIGEST TV EQUIPMENT FUNDAMENTALS until they become second nature to your

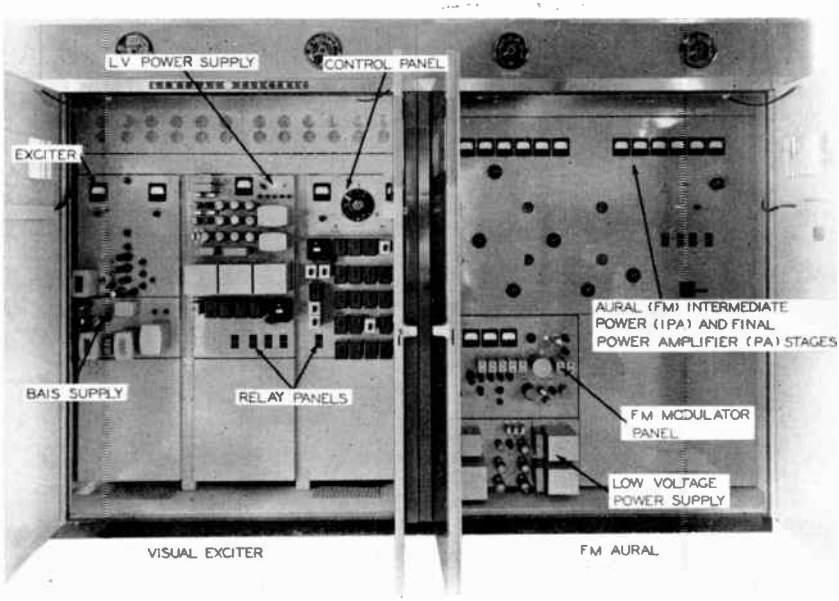

Figure 5.3F. Courtesy General Electric.

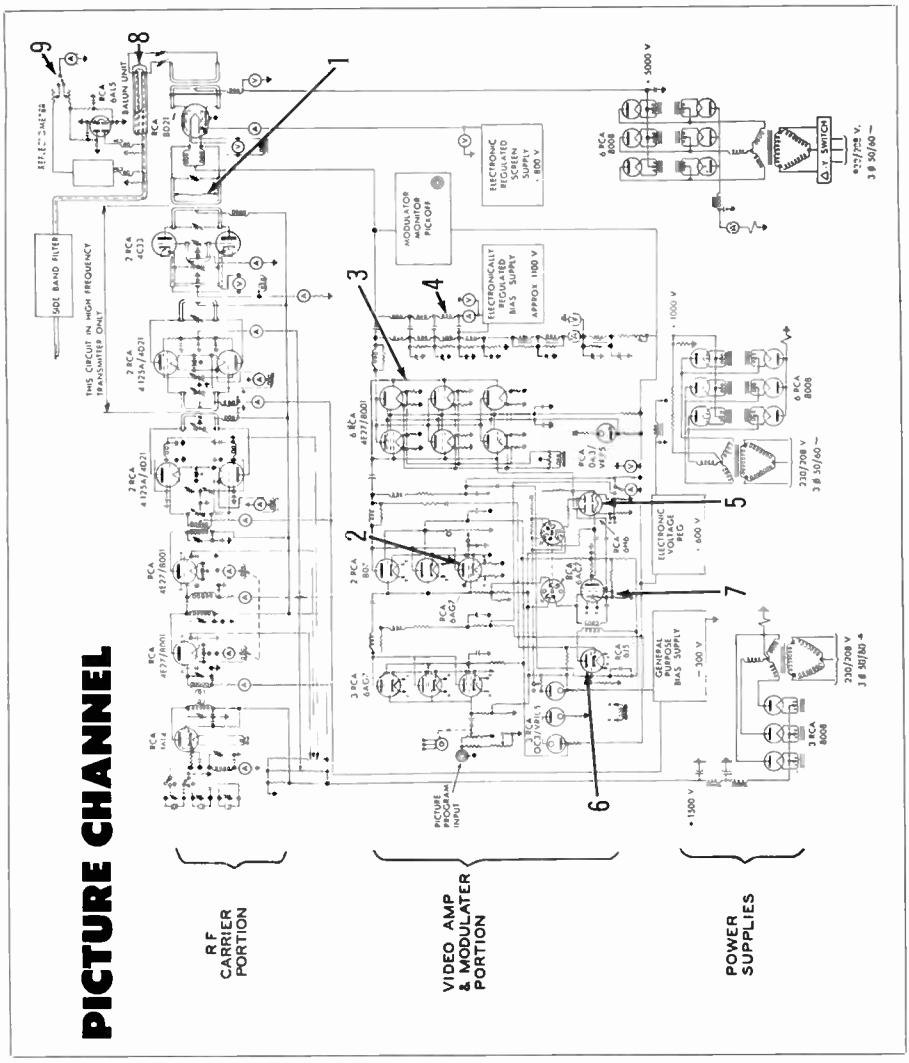

Figure 5.3G. Simplified schematic RCA TT-5-A video transmitter.

thinking process. This is the foundation upon which an entire career is based.

A simplified schematic of a typical high-level modulated visual transmitter, the RCA TT-5A is shown in Fig. 5.3G, pictured in section 1.14. This transmitter employs grid modulation of the final stage. Part of the lower sideband is removed in the power amplifier output, the rest being attenuated to the standard amount in the vestigial sideband filter.

In the RF carrier portion, a 1614 tube is used as a crystal oscillator, and the plate tank circuit is tuned to twice the crystal frequency, serving as a doubler. This output is link-coupled to the 4E27, serving to double again its input frequency. The following stage is a 4E27 tripler, which in turn is inductively coupled to the tuned grids of the two 4-125A/4D21 tubes in push-pull. For channels 2-6 (54-88 mc), this stage drives the 8D21 power amplifier final output. More frequency multiplication is required, however, for the 7-13 channels (174-216 mc). In this case, this

push-pull stage is used as a tripler, and two additional RF stages are inserted to provide adequate drive for the final stage. These stages are indicated in the simplified schematic.

When high-level grid modulation of this type is used, a damping circuit (1) across the grid circuit of the PA is used to absorb a constant amount of RF power from the driver tubes. This is necessary to swamp out changes in loading on the driver which would occur under grid modulation of the final stage. This preserves the modulation linearity in the high-output region of sync peaks, where considerable grid current is caused to flow.

In the video amplifier and modulator section, three 6AG7 tubes in parallel comprise the first picture amplifier. The signal then passes through a high frequency compensating network (series-shunt peaking coils) to two 807 tubes in parallel as the second picture amplifier. The 6AG7 tube (2) connected in parallel to the 807 tubes is the sync expander to stretch the sync. Since the video signal to the first amplifier input is standard black negative, the polarity of the signal to the grids of the second amplifier is black positive. The 6AG7 tube is operated class C, while the 807 stage is operated class A. Therefore the sync expander tube conducts only in the sync region, adding to the total output of the 807 tubes during the sync portion of the composite signal. Compare the signal polarity and method of action of this sync expander circuit with the sync stretcher circuit of the GE transmitter described previously. This serves to give the reader a good insight of the two main types of commercial sync stretching circuits.

The modulator stage (3) consists of six 4E27 tubes parallel connected. The plate load into which the modulator works is a constant-resistance network maintaining a constant impedance of 500 ohms over the entire video band. It should be noted that one section of this network is connected to the electronically regulated bias supply. The internal resistance of this supply becomes part of the modulator load, permitting a frequency response down to and including DC. The 6H6 biasing and restorer tube (5) for the modulators is the final stage in the *keyed clamping* circuit comprising a 6J5 sync separator (6) and a 6AC7 sync amplifier-inverter (7). This circuit partially disables the modulator tubes during the last part of the horizontal blanking signal just after the sync signal from which the circuit is keyed. This is known as "back-porch clamping." The modulator bias is thus automatically clamped to the same predetermined value for each blanking pulse, restoring the DC component of the picture signal.

The *Balun Unit* (8) Fig. 5.3G is a group of transmission line elements for matching the balanced output of the final power amplifier to the unbalanced (one side grounded) coaxial transmission line. *Balun* is a contraction of the term "balanced-to-unbalanced." The basic principle of the balun is shown in Fig. 5.3H. The transmitter output connects directly to the unbalanced transmission line, with the addition of a quarter-wave section shorted at one end to the grounded outer conductor. It is

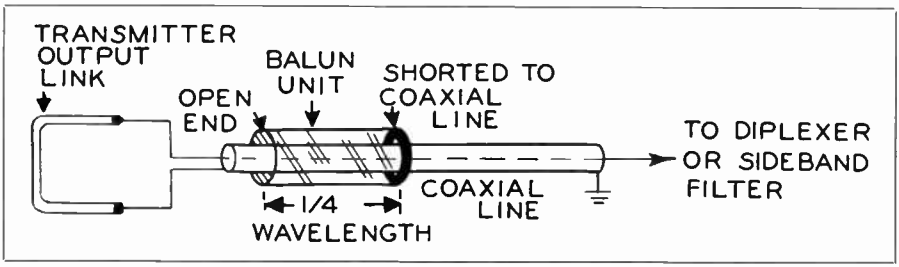

Figure 5.3H. Basic principle of balun unit.

recalled (section 5.2) that a ¼ wavelength line shorted at the receiving end (looking from the power input terminals) presents theoretically infinite impedance at that frequency, equivalent to a parallel tuned circuit. In this manner, the balanced connections may be transformed to an unbalanced line (or vice-versa if desired) with negligible power loss or impedance mismatch.

The *reflectometer* (9) is basically a peak-reading vacuum tube voltmeter, inductively and/or capacitively coupled to the transmission line. This device may be used for one of two primary purposes. (1) To indicate the standing-wave ratio on the line for purposes of properly terminating the line in its characteristic impedance and to indicate any changes over the operating day and (2), to indicate relative peak-power output of the transmitter. In the RCA TT-5A diagrammed in Fig. 5.3G, two reflectometers are provided (9) to provide both of the above facilities.

The tuning of this type of transmitter requires special procedures only in the final stage, since all preceding frequency multiplier and driver stages are conventional, narrow band circuits. Actually, some attenuation of the lower sideband is attained when the final is properly tuned to achieve this characteristic. The final tank is tuned to pass a band of frequencies approximately 6 mc wide. This is accomplished in practice by using an auxiliary crystal which is ground to operate 1.6 mc above the regular carrier crystal generator. This extra crystal is first switched into the oscillator circuit, and all stages including the final amplifier are tuned to this frequency. When this is accomplished, the regular assigned carrier frequency crystal is switched into the oscillator circuit, and all circuits *except* the final stage are tuned to this operating frequency in the conventional manner. Thus the regularly assigned operating frequency is fed to the grid circuit of the final where it is modulated with the composite video signal. The output tank, however, being tuned so that the middle of its pass band is approximately

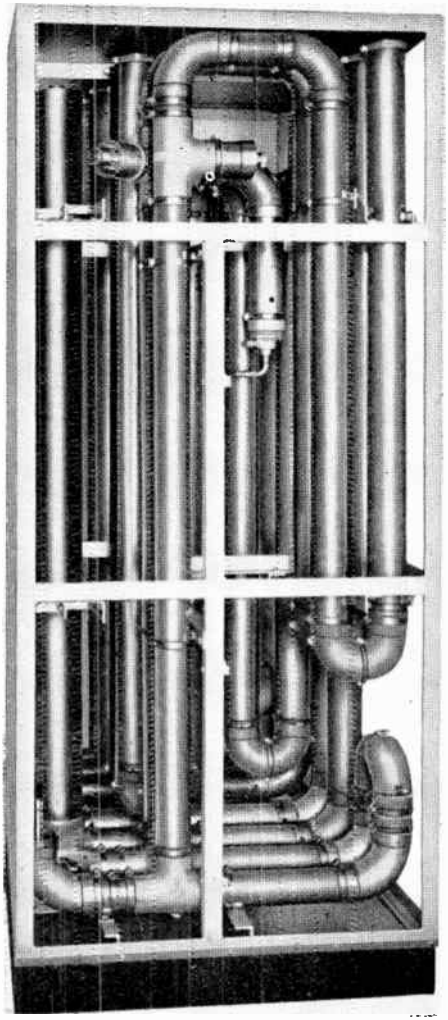

Figure 5.3I. The vestigial sideband filter is composed of permanently tuned coaxial lines. Courtesy RCA.

1.6 mc above the carrier frequency, attenuates most of the lower frequency portion of the lower sideband before feeding into the vestigial sideband filter.

This filter, diagrammed in section 1.14, is actually composed of permanently tuned coaxial lines used as reactive elements. (Section 5.2.) The unit is illustrated in Fig. 5.3I. The low pass section absorbs the undesired energy from the lower sideband in its power terminating resistor. The high pass sec-

tion efficiently transfers the desired band pass to the notch filter, which is tuned to a single frequency near the next lower TV channel and absorbs this energy. The lower sideband attenuation must be at least 20 db at a point 1.25 mc below the visual carrier operating frequency. The sound channel of the next lower TV station is 1.5 mc below. Therefore the notch filter is tuned at 1.5 mc lower than the operating visual carrier frequency, to assure positive protection to this sound channel. The aural center carrier frequency (frequency modulated) is located 0.25 mc below the upper end of the channel. The frequency spacing between the video carrier and the center of the aural carrier is 4.5 mc. The bandwidth of the lower sideband of the picture carrier is approximately 0.75 mc. The remaining part of the lower sideband (0.5 mc) serves as the attenuation area. The standard vestigial sideband transmission curve shown in section 1.14, Chapter One, should be fixed in the readers consciousness so that ready application to any band may be made. Fig. 5.3J illustrates this idea for Channels 2-6 of the VHF band.

Visual and aural transmitters used in the UHF bands pose special problems in design which affect to a great extent the operating, tuning and maintenance techniques of the operator. Manufacturers are departing more and more from the practice of paralleling large numbers of conventional tubes to obtain high power, and are developing special high-frequency power tubes with integral functions of circuit elements designed into mechanical mounting features.

As an example of this functional design, observe Fig. 5.3K which illustrates the type 6161 UHF Power Triode. This is a very compact (3-13/32" max. length, 1.76" max. diameter) forced-air-cooled tube of the grounded grid type. The plate dissipation rating for TV service is 250 watts, and full plate input power is used at frequencies to 900 megacycles, and may be operated as high as 2000 mc with reduced voltages.

The coaxial-electrode structure points up the basic design used for power tubes in the UHF region. This adapts easily to circuits of the coaxial-cylinder or cavity design. Because the terminals of the tube have progressively smaller diameter from plate to grid to cathode to heater as shown, it is possible to insert it into coaxial and cavity circuits from one end and without disassembly of the circuit. This is shown in Fig. 5.3L, where it may be observed that the tube may be fitted into such a mounting from above, and with the concentric heater and cathode terminal fitted into the base, the plate and grid terminals make contact upon the surfaces shown. Remember that this is the grounded-grid type of service basically illustrated in the sketch accompanying the figure of the mounting.

The *unipotential cathode* is indirectly heated by the heater, one terminal of which is common to the cathode. The cathode in UHF service is subjected to considerable bombardment resulting from transit-time effects of the electrons. The resulting back-bombardment raises the temperature of the cathode, the magnitude of the heating being a function of the operating conditions

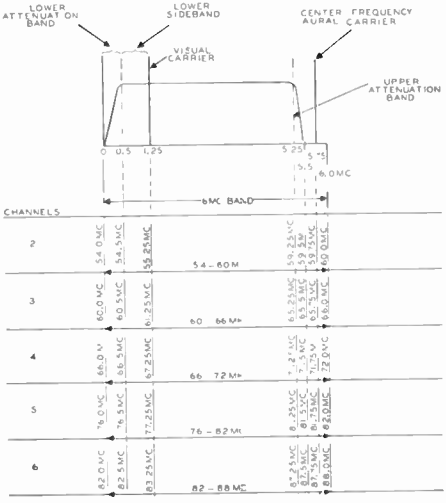

Figure 5.3J.

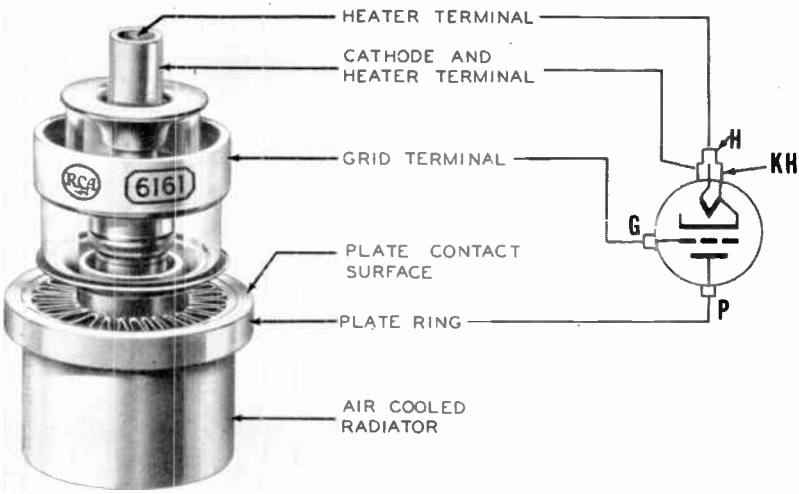

Figure 5.3K. Type 6161 UHF power triode. Photo Courtesy RCA.

and frequency. In order to prevent overheating of the cathode which would severely shorten the life of the tube, the tube is put in operation with full rated heater voltage (6.3 volts), and is then reduced to the lowest value that results in the desired power output. Optimum operating value is found in practice by reducing the heater voltage (with normal modulation applied to the transmitter) until a reduction in output is noted. The heater voltage is then increased by an amount equivalent to the maximum percentage regulation of the heater voltage supply, and then further increased by about 0.1 volt to allow for other variations. Slight circuit readjustment may be necessary after change of the heater voltage.

The grid is also subjected to considerable heating in UHF TV service caused by both normal electron bombardment and transit-time effect bombardment as well as the circulating RF currents. Therefore the forced-air flow across the radiator, grid terminal, cathode terminals and seals is very important. The operator will find in practice that an interlocking protective device will prevent filament or plate voltages from being applied until normal air flow is established. Control circuits and protective relays are discussed in Chapters 11 and 12.

The Klystron, or cavity resonator, is also finding application in the UHF bands for power amplifier purposes. One experimental type UHF transmitter using the Klystron is block diagrammed in Fig. 5.3M. The exciter, driver unit is really a complete 100 watt TV transmitter. The frequency control is unique in that only one crystal oscillator is used to control *both* the visual and aural carriers. Consequently, these two carriers are essentially locked together with a fixed separation of 4.5 mc. Any frequency drift due to the crystal results in each of the carriers drifting in the same direction, while the two remain 4.5 mc apart. This is especially desirable in the intercarrier method of reception which is very popular.

The block diagram shows that the crystal oscillator output is multiplied in the conventional manner to one-fourth of the visual carrier frequency. This frequency is then doubled twice in cavity-type circuits using type 4X150A tetrodes which, in turn, excite the driver-amplifier at output frequency. This driver amplifier, also 4X150A tetrode, is grid modulated by

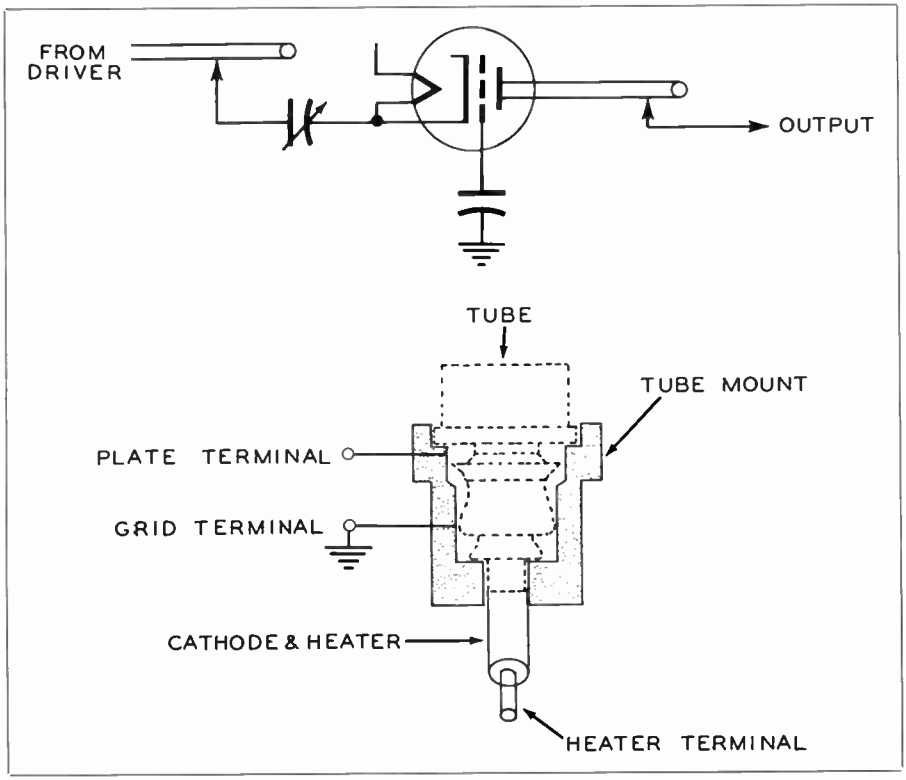

Figure 5.31.

the visual signal through a clamp-type visual modulator. This video modulated signal is then fed to the power amplifier through coaxial cable.

The FM aural signal is generated by a direct crystal-controlled phase modulator, low in center-frequency compared to that of the visual carrier crystal. The two are then combined in the mixer stage to obtain the controlling source of the aural carrier. The aural signal is then multiplied by a series of conventional and cavity-type frequency multipliers similar to those used in the visual channel. The result is an aural carrier 4.5 mc higher than the visual carrier, and essentially controlled by the visual carrier crystal.

The most unusual and interesting portions of this transmitter, yet the least complicated from the standpoint of circuitry and operation, are the visual and aural power amplifiers. These two stages employ multi-cavity Klystrons, developed especially for UHF television. The GE experimental type number is the Z-1891. The resonant circuits are integral with each tube and are adjustable to permit tuning to the desired channel and bandwidth. Cooling is accomplished by circulating water and forced air. The structure is designed for exceptionally long life, and it is expected that the useful life will exceed that of more conventional high frequency tubes by several times.

The Klystron serving as the visual power amplifier operates as a broadband linear stage. Power gains in excess of 50 are easily realizable in this power amplifier when adjusted for wideband output response of 5 mc, flat within 1 db.

The Klystron used as the aural power amplifier is identical with that used in

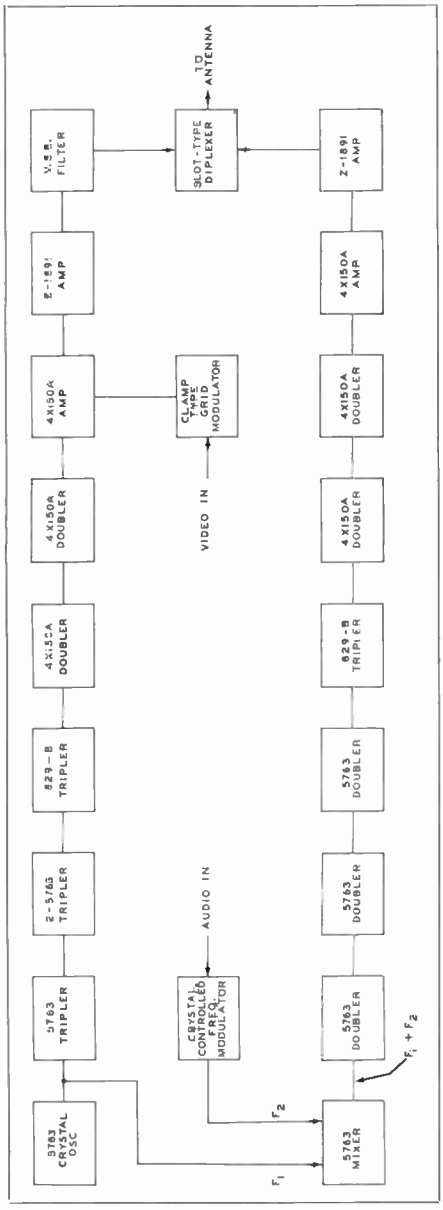

Figure 5.3M. Block diagram General Electric experimental UHF transmitter using Klyston power amplifiers.

the visual channel, but need not be adjusted for broadband response. Therefore the power gain may be made extremely high. Power gains of 5000 have been obtained under narrow-band conditions from this tube, with no evidence of instability.

As shown, a vestigial sideband filter is employed in the picture output stage to complete the necessary attenuation of the lower sideband, although some of this attenuation is accomplished by the selectivity of the preceding driver cavity circuits.

The operator unfamiliar with grounded-grid RF power amplifier will note one important difference in tuning characteristics, from the conventional circuits using grounded-cathodes. Variations in the load on the output stage will produce corresponding variations in load on the driver stage. This effect is noted by the simultaneous increase in plate currents of both the output and driver stages.

5.4 *TV Antennas and Feeding Systems*

TV antennas differ radically from standard AM broadcast stations, but are based essentially upon the same basic principles of FM broadcast types. The major difference here is that the antenna must be much broader band; that is, the impedance characteristic must be essentially flat across the full 6 mc of the TV channel.

TV antennas, especially for the VHF bands, are usually built utilizing the

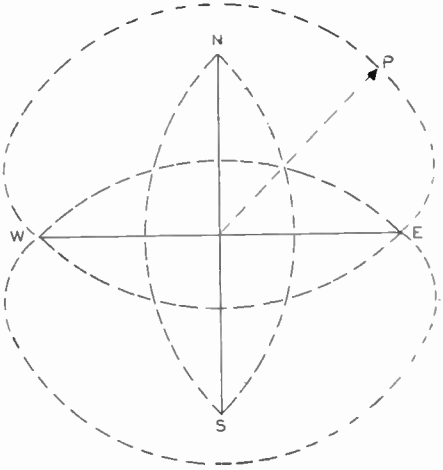

Figure 5.4A. A circular radiation pattern is obtained from two dipoles in turnstile, phased 90 degrees apart in current feed.

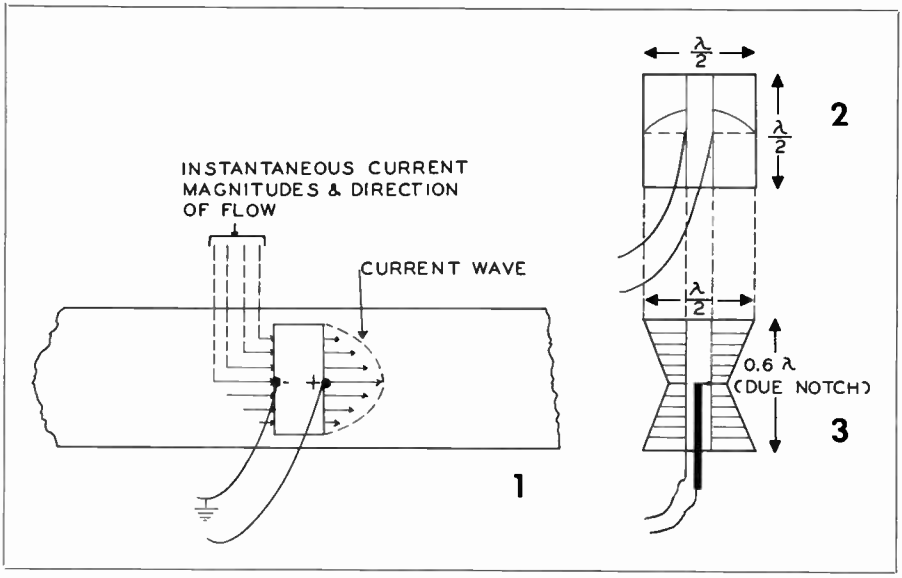

Figure 5.4B. Evolution of bat-wing antenna.

principles of the doublet, with means to achieve circular radiation and power gain in the horizontal plane. The circular radiation is achieved by crossing the dipoles in a turnstile arrangement and feeding in quadrature. This means that the currents are fed to the radiating elements 90 degrees apart, which is necessary in order that the radiated pattern be circular rather than directional. This principle is illustrated in Fig. 5.4A. Considering only one dipole at a time, it may be observed that the East-West dipole (current distribution shown by dotted lines) will give unity radiation in the N-S direction, and minimum radiation in the E-W direction. The North-South dipole will give unity radiation in the E-W direction, and minimum energy off the ends in the N-S direction. At any of the angles at which radiation is received from both dipoles, the resultant energy is the vector sum of the two fields having cosine distribution.

Thus at point P, representing the Northeast point at 45 degrees between the ends, the radiation from each element is 0.707, and the vector sum is (1), or unity. At 30 degrees (from the N point), the cosine of the N-S radiation is 0.866, and the cosine of the E-W radiation (which is 60 degrees from the E end) is 0.5. Again, the vector sum is unity. If the reader repeats this process around the entire configuration by noting the cosines at each angle, he will find that the vector sum at all angles is unity, achieving the desired circular radiation.

The Superturnstile, or "bat-wing" type of antenna popular on the VHF television bands is composed of a number of crossed dipoles, modified in design to result in a broad-band impedance characteristic. These elements are termed *current sheets* in technical descriptions, and are fed with currents in quadrature as in the above illustration. The evolution of the batwing antenna is illustrated in Fig. 5.4B, and described below.

In (1) of Fig. 5.4B, a metal sheet with a slot ½ wavelength long at the operating frequency is excited with RF energy at the midterminals of the slot as shown. At the instantaneous time shown, the polarity of the excitation is such that current flows through the metal sheet in the direction of the ar-

rows. The slot may be considered as two parallel conductors ½ wavelength long and shorted at the ends. Since center feed is used, the current wave is set up as shown by the dotted line. Current then flows through the metal sheet in the direction of the arrows, being highly concentrated in strength through the center as indicated by the length of the arrows. The spacing of the edges of the slot are negligible at the operating frequency, so that actual radiation occurs in both directions from the center of the metal sheet.

If an actual metal sheet were used in practice, radiation resistance would become so high at a distance slightly exceeding ¼ wavelength from the slot, that negligible radiation would result. If, therefore, the sheet is made not more than ½ wavelength in dimensions as shown in (2), optimum radiation is achieved. The current distribution and resulting radiation characteristics may be seen to approximate that of a half-wave dipole, with maximum current and zero voltage at the center of the radiator. Such an element may be physically supported by a mount at this zero potential point which occurs in the center of either end.

In practice, the "sheet" is notched at the center (3) to reduce this dimension below ¼ wavelength and reduce the current flowing at the midsection. The height of the current sheet is then made approximately 0.6 wavelength. This results in greater currents at top and bottom relative to those through the center and the vertical pattern approaches the characteristics of two horizontal dipoles spaced ½ wavelength apart vertically. This allows a gain in the horizontal plane of about 1.2 per bay. These bays may be stacked to achieve gains up to approximately 7 for the VHF band to which the bat-wing is designed. Each bay actually consists of two such "current sheets" in the turnstile or "quadrature" arrangement. The coaxial feed lines may be connected so that the outer conductor feeds one side of each element and the inner conductor feeds the other side. (3) Unless double transmission lines are used, a diplexer is used so that one element of each bay is fed by the sound transmitter, and the other element fed by the visual transmitter. The currents must be fed 90 degrees apart by means of an extra section of ¼ wavelength line in one side as described in section 1.14.

As shown in (3) of Fig. 5.4B, the current sheet is not a metal sheet, but is of mesh construction consisting of metal bars to reduce wind resistance. The spacing between the bars must be negligible at the operating wavelength. All feed lines to the stacked array are fed from common junction boxes, and are of exactly the same length to maintain correct phasing.

A type of radiator different from the bat-wing and giving power gains of from 10 to 20 times in the VHF bands is the Supergain antenna illustrated in Fig. 5.4C, the vertical separation being slightly less than one wavelength from center to center. The tower has side dimensions of ½ wavelength. Also shown in this figure is the extra phasing section (¼ wavelength line) to provide quadrature feed to the E-W radiators.

A *bridge power equalizer* and *terminating resistor* may also be noted in this drawing. Such facilities are used to avoid any possible ringing effect which causes ghost or multiple images to be transmitted. This results when standing waves exist on the line from any slight impedance mismatch over any portion of the 6 mc bandwidth, the waves reflected down the transmission line returning to the antenna where radiation occurs. This produces an "echoing picture" effect, and is the greatest problem faced by the antenna installation crew. As an example, assume that at some frequency within the band, the antenna of Fig. 5.4C (without the power equalizer) presented an impedance of 85% that of the characteristic impedance of the transmission line. Through the leg of the radiators fed by the ¼ wave phasing circuit, this im-

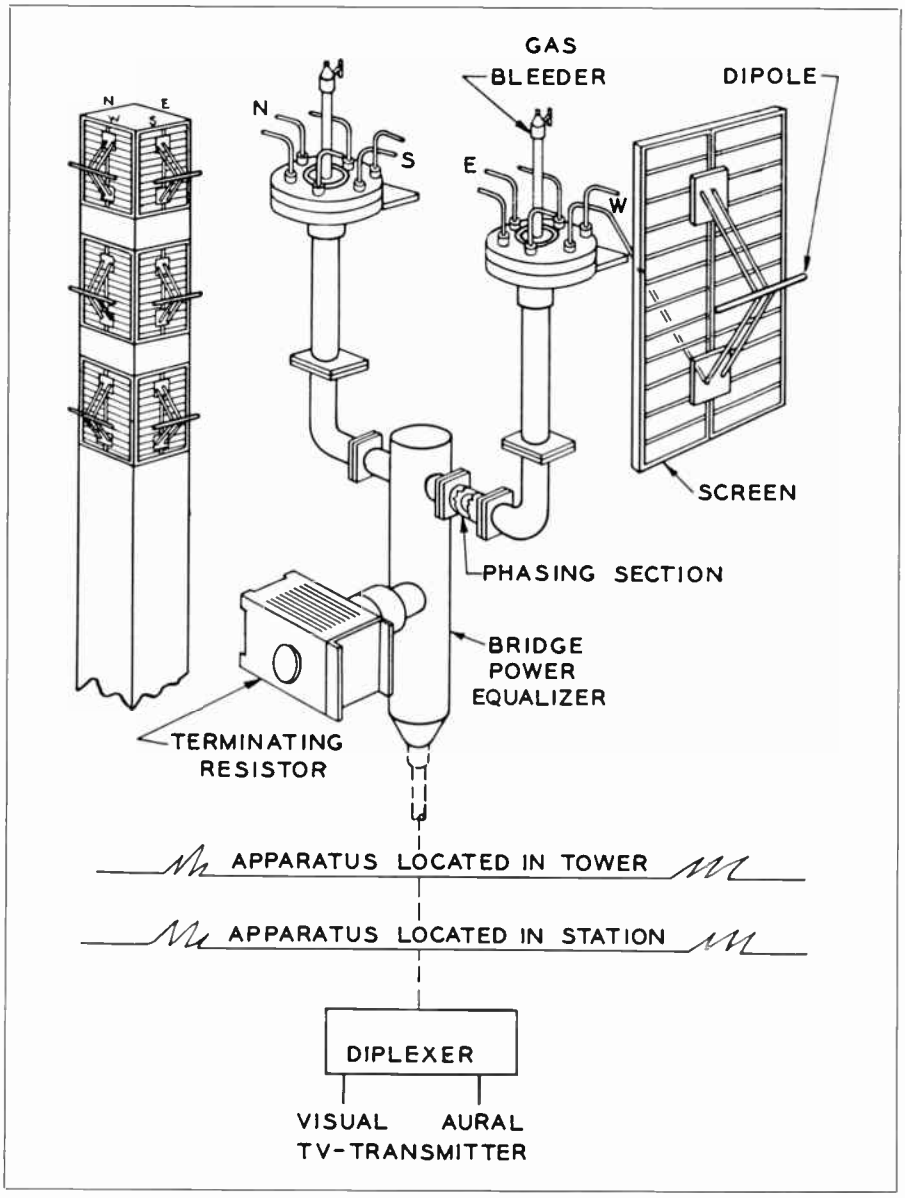

Figure 5.4C. Constructional details of RCA supergain antenna. Courtesy RCA and Broadcast News.

pedance is inverted to approximately 118%*. Since the two terminals at the output of the diplexer would thus be in the ratio of 0.85/1.18, the resultant power from the voltage ratio in the two sides would approach the ratio of 1 to 2.

$$\left(\text{Power} = \frac{E^2}{R}\right).$$

*Footnote: Lester J. Wolf: "High Gain and Directional Antennas for Television Broadcasting," Broadcast News, Volume 58.

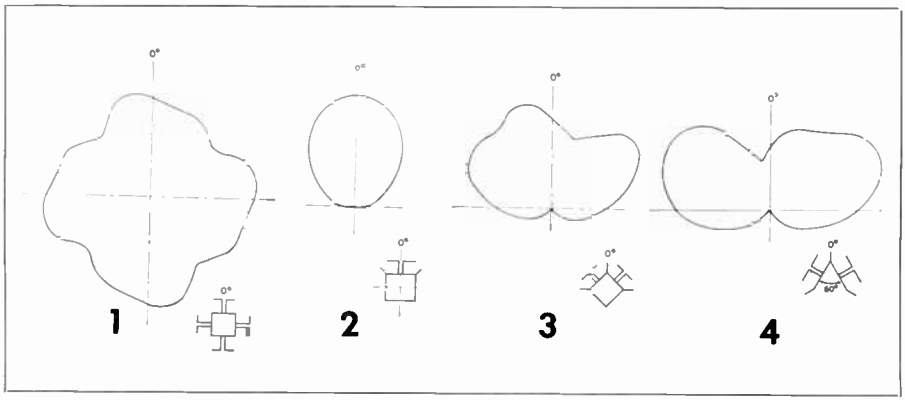

Figure 5.4D. Radiation patterns obtainable with the RCA supergain antenna. After RCA data.

This destroys the desired circular pattern.

The power equalizer shown in this application takes the form of a bridge circuit at the junction of the E-W and N-S coaxial lines. By means of the bridge balance, the reflected waves are separated from the initial applied waves and dissipated in the terminating resistor.

The operator will find some applications where a circular pattern is not desired. In some instances the location of the transmitter relative to the area of service is such that a directional pattern would be most satisfactory. The design of the Supergain antenna discussed here yields itself readily to such applications, and this practice is expected to increase in popularity as the number of stations increase in number across the country. Fig. 5.4D illustrates four basic patterns and the necessary orientation of the radiating elements to achieve them. In (1), the usual method of obtaining an essentially circular radiation pattern is shown. In (2), it is noted that each radiator and screen assembly has essentially the same horizontal pattern as that from *one side* of a horizontal dipole. Drawings (3) and (4) are then self explanatory. It should be noted that a power gain is achieved in the maximum direction by this directional effect as well as from stacking layers of radiating elements to cut down the vertical angle radiation.

In the UHF bands, effective radiated powers (ERP) of up to 1000 KW are allowed by the FCC. A great portion of this ERP must be achieved by a high gain antenna system. Fig. 5.4E illustrates the General Electric TV transmitter antenna designed for channels 14-19 in the UHF band. It consists of a 4-bay helical radiator which GE terms a *side-fire* design. The tubular mast shown supporting the helical radiator forms the outer conductor of the incoming coaxial line. Four feed points are required along the mast, one for each complete radiating bay. The antenna provides a power gain of 20.

Although waveguides were formerly thought to be necessary for feeding UHF transmitters due to the high attenuation of coaxial lines suitable in the VHF band, many advances of very recent date have disproved this theory. Development of coax lines with low loss throughout the UHF bands was largely advanced by a resin known as TEFLON. This is the trade-mark for DuPont Tetrafluoroethylene Resin. Spacing insulators made of this new compound are used in the UHF coax lines, achieving remarkably high voltage breakdown and extremely low power loss. Whereas coaxial lines of former design were not practical in use above approximately 200 mc, the new lines using this "electrically transparent" diaelectric discs as spacers are practical at the lower end of the microwave

Figure 5.4E. Broadcast television 4-bay UHF high-gain helical transmitting antenna, type TY-24-A, for channels 14 through 19. Courtesy General Electric.

relay frequencies. The former VHF coax line falls off rapidly in characteristic impedance above 225 mc, being down to 45 ohms (from 51.5 ohms) at 325 mc. The new lines hold their characteristic impedance up through 1000 mc, and deviate very little as high as 2000 mc. Attenuation is only approximately 0.4 db per 100 feet at 1000 mc and remains under 1 db per 100 feet at 2000 mc. It is only reasonable to assume that the convenience of coaxial lines will ultimately be extended throughout the microwave region, although dents or any type of discontinuity in the line at UHF and microwave frequencies have much more drastic effect on voltage standing wave ratios than at the lower frequencies.

5.5 *TV Transmission Gamma and Contrast Range*

Before entering the rest of the text which concerns the practical operation and setup of the equipment, it is advisable to examine the basic characteristics with which the entire operating technique is concerned; namely the artistic values of the picture relating to *gamma* and *contrast range*.

In all aural transmission systems, the unit of level measurements is based

upon the logarithmic decibel scale. This is because the response of the human ear itself is logarithmic; that is, greater changes in ratio of sound levels are required at high sound intensities to become noticeable to the ear than is necessary to be noticeable at low levels. Similarly, the visual response of the human eye as a function of the brightness level is based upon the Weber-Fechner law which states: the sensation produced in the mind of an observer varies approximately logarithmically with the brightness of the object viewed.

This is to say that at high values of brightness, the response of the eye tends to become saturated, and a greater ratio of change in brightness is required at high brightness levels to be noticeable than is required at lower brightness levels. This is illustrated basically by (1) in Fig. 5.5A. It is noted that due to the slope of the visual response curve, a much greater change in brightness level is required at point "2" to produce the same change in visual response as a smaller change in brightness level produces at "1." The term *gamma* relates the transfer characteristic of the image brightness to the object brightness. If the image reproduced on the picture tube is of the same contrast range (ratio of brightest highlight to deepest shadow) as the original image contrast, the gamma is unity or 1. This is analogous to linear amplification, and is shown by the solid line of (2) in Fig 5.5A. The dotted line indicates a gamma less than unity (which reduces the contrast) and the dash-dot line indicates a gamma greater than unity, which would increase contrast.

Photography addicts are already acquainted with the properties of gamma in making their own prints. They know that a high contrast printing paper (gamma greater than unity) may be used to increase the contrast of an uncontrasty negative. They also know that too much gamma results in a "harsh" print.

It may be noted that the image orthicon tube has a substantially linear output to light input (section 2.2) and therefore has a gamma of 1 (over the operating range of the pickup tube). It is not to be inferred, however, that a unity gamma is desirable at all times in the TV transmission system. In monochrome transmission, some contrast is lost in the rendition of colors to the gray scale. Most TV engineers recommend a gamma of 1.4 as approximately optimum for the entire system. In practice, picture tubes have a gamma greater than unity so that the video voltage applied to the beam grid cause the signal variations corresponding to the light portions to fall in the steep part of the transfer curve. As a result, white levels cause a greater variation of beam current than occurs at darker levels.

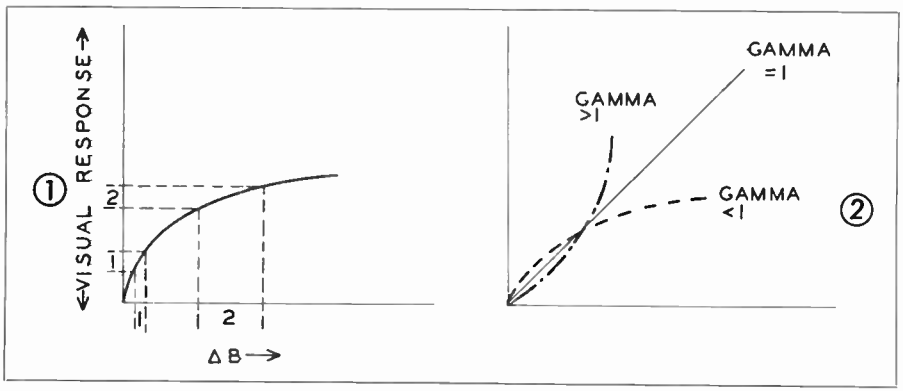

Figure 5.5A.

Any portion of the TV system may be adjusted for optimum gamma characteristics; amplifiers, cameras, or modulation characteristic of the video transmitter. The setting of the overall transmission system gamma forms an important part of operating practice.

In color transmission systems, a gamma of unity is considered optimum at the present writing. Thus relative brightness levels of the reproduced image is the same as in the original scene, over the operating range of the pickup tube. Thus some compromise in operating practices appears necessary in any compatible system of color transmission where monochrome receivers may be used to receive color in black and white.

The contrast range for TV transmission systems is seriously limited as compared to the original scene or even to film. Contrast range in original sight impression is as high as 1000:1. The best photographic contrast range for prints on glossy paper may approach 100:1. The best contrast range achieved in the present television transmission system is approximately 30:1, and a range of 20:1 is seldom exceeded in practice. This range is not as "inadequate" as the figures may lead the reader to believe. For example, it is well known that the original dynamic range of the sound levels from a symphony orchestra at the point of origin is close to 80 db. Yet a reproduction of a dynamic range of about 40 db in the average living room produces sound levels from extremely soft to extremely loud, giving adequate reproduction of the original dynamic range. About all that is known at the present time regarding picture transmission is that a contrast range of 20:1 to 30:1 results in "satisfactory" reproduction, whereas a contrast range of 10:1 is noticeably inferior.

CHAPTER

6

Operating Studio and Control Room Equipment

The remainder of the book is dedicated to the purpose of bridging the gap between television theory and the practical use of the equipment. It is designed to answer the all too prevalent cry: "I know the theory. Now what do I do on the job?"

Television shows are born in the minds of clients, writers, producers and directors to meet a variety of needs limited only by the wide variance of human interests. Equipment concerned with transferring these paper ideas to the minds of the viewers and listeners may be compared to a musical instrument. The mechanical and electrical functionings themselves are only a means to an end; they are inert, lifeless entities capable of accomplishing the desired results only under guidance by the operating technique of the user. The finest pipe organ in the world can fill the ears with all the drama of sound of which it is capable only under the touch of commanding and understanding hands. Television equipment of the finest engineering design can transform the original colors of a scene into the lights, the darks, and the grays of an accurate signal relationship only under commanding and understanding hands. In addition to the necessity of obtaining good image resolution, definition, brilliance and contrast, the engineer must be conscious of artistic values in both picture and sound. Without that consciousness, he is like an actor on the stage who reads the lines instead of dramatizing them.

It is with a humble feeling indeed that the author faces the challenge of analyzing operational problems and their solutions. The fact remains that there is no subject more in need of expansion and so inexhaustible in scope. It is only hoped that the basic foundation given here will prove of service to the trade and inspire future contributions to the field.

6.1 First — Check the Monitors!

John R. Meagher, writing for the receiver servicing trade in the RCA Radio Service News, has this to say:

"Many TV owners are extremely fussy about having the circles (of a received test pattern) exactly round. Some of them check the circles by holding a small plate in front of the screen, and others measure the wedges to see if they are equal lengths. In some TV areas, this makes life extremely difficult for the television technicians, because it is an unfortunate fact that some stations do not transmit good linearity. Also, the linearity may be different from one camera to another. In one particular city, if the receiver is adjusted so the test pattern circle is round on the first station, the second station will be egg-shaped vertically, and the third station will be egg-shaped horizontally. . . ."

Unfortunately, Mr. Meagher's statement concerning "one certain city" is all too true for a number of "certain cities." How does this come about? If the viewers were to visit the different

stations involved, they would find the appearance of the test pattern on the station monitors in good order. It is safe to say that no station *intentionally* transmits non-linearity in the signals.

The fault is one which is just beginning to get its full share of attention among station engineers. The error has been in setting up and aligning camera chains without first checking and adjusting all monitors in the system against a separate and accurate signal source. It is a very easy matter to compensate for non-linearity of camera sweep by an opposite non-linearity in monitor controls. Thus, if one camera chain is adjusted to obtain optimum results on the monitors, and all other cameras adjusted in the same manner, there is no assurance that the transmitted signal is strictly linear in nature. This practice imposes a severe handicap on viewers of more than one station and on the receiver service technician.

The first logical step is to perform size, linearity, and aspect ratio checks on the master monitor (usually the line output monitor) at the control room. Individual camera monitors may then be checked against the master monitor. There are two basic methods of checking picture monitors which are similar in nature: bar generator method, which is simply a sine-wave signal, and the Grating or Crosshatch generator.

The idea in either case is to place horizontal or vertical bars (or both) upon the screen of the picture tube. In (1) of Fig. 6.1A, a stable sine wave oscillator is connected to the video amplifier of the master monitor. The monitor is operated so that the sync voltage for the sweep circuits is taken from the video amplifier as when the monitor is used as a relay receiver monitor. The sweep is driven from the 60 cps and 15,750 cps multivibrators fed from the video amplifier (Section 3.8), which in this case is receiving no signal other than the single frequency sinewave. This sine wave is therefore simultaneously used to modulate the grid of the picture tube and as sync voltage for the picture tube sweep circuits.

Consider the action if the sine wave is 60 cps. On the positive half-cycle of this signal, the grid of the kinescope is swung in the positive direction, increasing the raster brightness. During this half cycle time of 1/120 sec., the vertical scanning beam which is synchronized by the sine wave has moved about half way down the screen. The negative half-cycle now reduces the screen brightness. Fig. 6.1A(2) shows the resulting raster, consisting of two horizontal bars, light on top and dark on bottom. If the sweep had happened to sync first on the negative half-cycle of the applied signal, the dark bar would be on top and light bar on bottom.

If the signal generator is now increased to some multiple of the 60 cps sync separator circuit of the monitor, but still less than the horizontal acceptance circuit, a number of additional pairs of horizontal bars will appear across the raster. It is observed from the first example that each cycle contributes to the formation of one pair of bars, one light and one dark. Therefore the number of pairs of bars placed upon the raster is equal to the applied frequency divided by the scanning frequency (in this case the vertical scanning frequency), minus any pairs that are produced during the V retrace time. If 900 cps is applied, the number of bars produced is 900/60 = 15 pairs of bars. However, if the V retrace time is 5% of the total scanning cycle, 5% of the above number of bars are redistributed back across the pattern so fast that they are not distinguishable. Since 15 *pairs* of bars are produced for a total of 30, and 5% of 30 is 1.5, 30-1.5 is 28.5 bars visible horizontally across the raster. Fig. 6.1A(3) illustrates a number of bars produced in this fashion, which may very conveniently be used to check the vertical sweep linearity of the monitor circuits. If the bars are evenly spaced from one another all the way up and down the raster, the V sweep scanning motion is of constant velocity and therefore linear in sweep action. If the vertical sweep is not of constant ve-

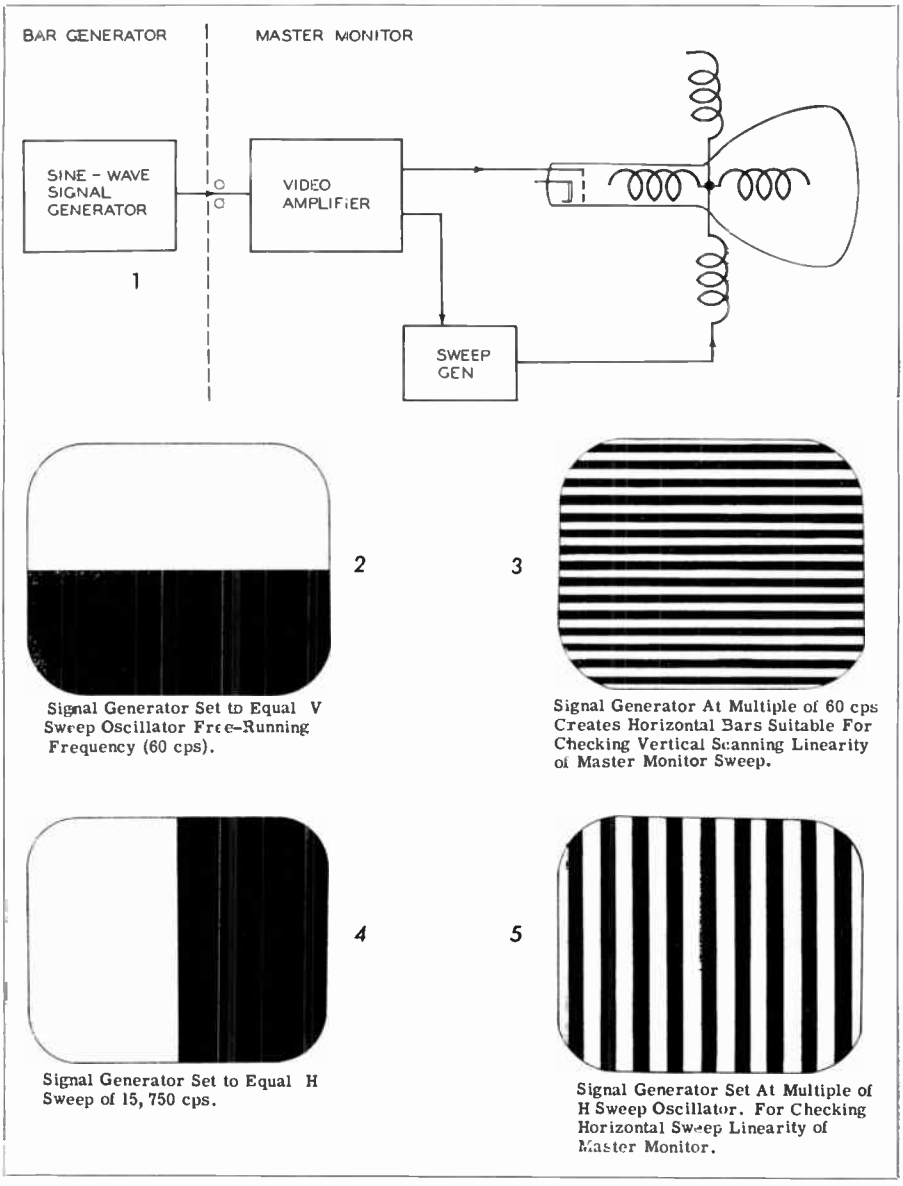

Figure 6.1A.

locity, the horizontal bars will be spread out or crowded together, and the monitor V sweep linearity control must be adjusted until the bars become evenly spaced. The linearity control is variously marked "V Saw," "V Lin," etc., depending upon the manufacturer. Some operators have practiced the actual measurement from the leading edge of one bar to the leading edge of the next bar, repeating this process all the way up and down by means of calipers or other means. Accurately lined transparent masks to fit over the face of the picture tube are sometimes used to more conveniently spot non-linearity.

If the frequency of the applied sine wave is made equal to or greater than the 15,750 cps, the frequency is sufficient to release and blank the beam during the horizontal sweep. If the applied signal is equal to the 15,750 cps H sweep, the screen becomes brighter on the positive half-cycle, and darker on the negative half-cycle as shown in (4) of Fig. 6.1A. Since a small number of thick bars are not sufficient to accurately check linearity, the frequency is increased in practice to 10 times this rate, or 157.5 kc. Therefore the number of vertical bars generated is 157,500/15,750, or 10 pairs of bars. This means that 10 white and 10 black bars would appear if it were not for the H retrace time. If the retrace time is 10% of the total scanning time, the number of visible vertical bars is 20-2, or 18 bars; 9 white and 9 black. The effect is illustrated in (5) of Fig. 6.1A, and may be seen to provide a convenient means of checking horizontal sweep linearity. If the bars are crowded on the left, for example, the H linearity control associated with the damper circuit should be adjusted, since this tube contributes to the sweep on the left side of the raster. (Section 2.3). Actually there may be several linearity controls here: one in the grid circuit and one in the cathode circuit of the damper tube. A linearity control in the discharge tube circuit controls the linearity of sweep toward the right hand side of the raster. As a general rule, these controls are not found on the front panel of the monitor, being located on the chassis or rear plate. Only the kinescope focus and brightness controls normally appear on the front panel.

The sweep height and width controls on the monitor also affect the linearity of sweep to some extent. Thus when the H width control is adjusted, sweep linearity controls must usually be adjusted again. The same occurs for V height adjustment. One linearity control normally adjusts the V sweep, usually being a variable resistor in the cathode of the V sweep amplifier stage to alter the grid voltage-plate current characteristic to compensate for the shape of the sweep curve.

The inter-relation of this procedure for obtaining good sweep linearity with that of adjusting for proper aspect ratio may now be seen. The raster on the screen is adjusted to the 3 units high-4 wide ratio, as, for example 6 x 8 inches on a 10" kinescope. As the height and width controls are varied, sweep linearity controls must be varied. As an example, adjustment of the V linearity control, being essentially a cathode resistance change, may also affect the gain of the V sweep amplification, affecting height. This points up the importance of carrying out the master monitor adjustments in conjunction with a bar signal superimposed upon the raster.

While this method is used in smaller stations without more elaborate equipment, and is satisfactory with extreme care and understanding, more satisfactory results may be obtained from commercial equipment especially designed for more rapid and accurate checks. The method previously described produces rather thick bars even with comparatively high sine wave frequencies, and applies only one group of bars, either vertical or horizontal, at a time. Such equipment as the RCA Grating Generator, or the Philco Crosshatch Generator, provide a very thin dark line trace, with horizontal and vertical bars produced simultaneously. Some commercial sync generators provide 157.5 kc and 900 cps signals mixed with blanking for the purpose of monitor linearity tests. Such is provided on the Du Mont sync generator by means of a switch, and on the General Electric sync generators appearing upon a pair of pin jacks on the front panel.

The block diagram and control panel of the RCA Grating generator is illustrated in Fig. 6.1B. A negative driving pulse of 15,750 cps is amplified, clipped, and differentiated to sync a multivibrator. The pulse output from this multivibrator constitutes the vertical bar signal, and may be varied from 157 to 1124 kc (see block diagram Fig. 6.1B), allowing 10 to 64 vertical bars to be

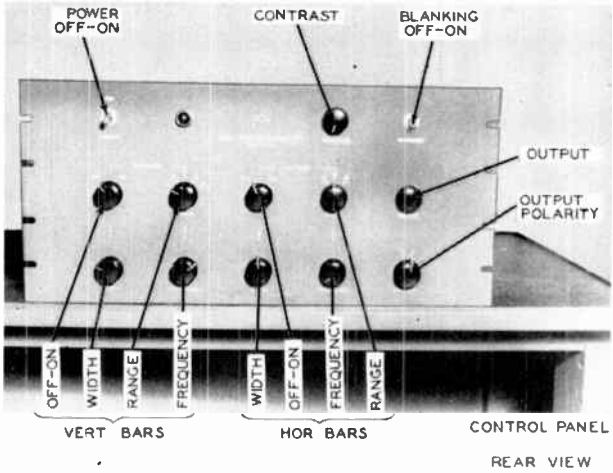

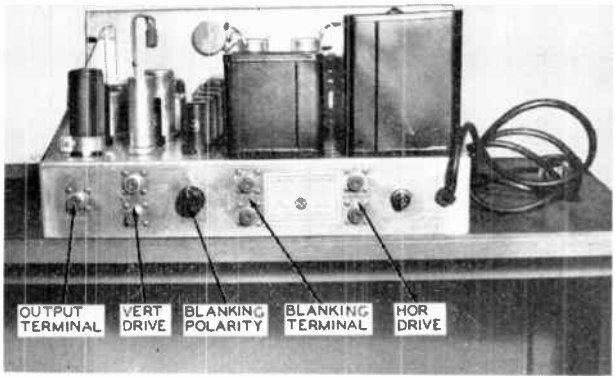

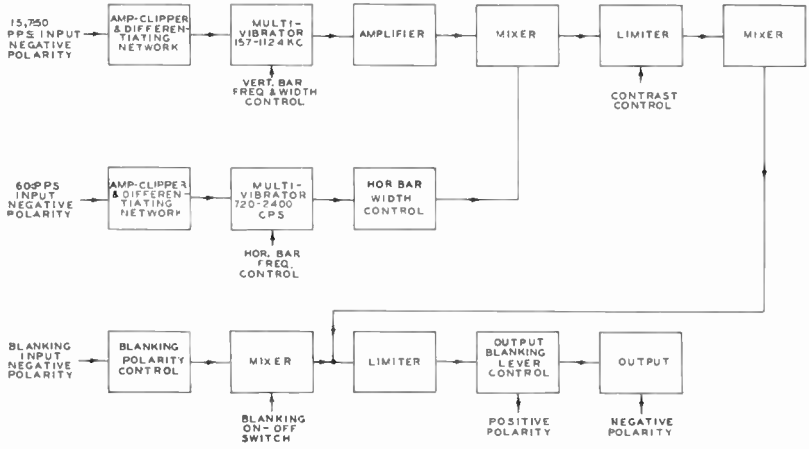

Figure 6.1B. RCA grating generator for aligning picture monitors.

placed upon the raster. These bars serve for horizontal alignment. This signal is amplified and fed to a mixer stage as shown.

A negative driving pulse of 60 cps is amplified, clipped and fed to a differentiating circuit, to sync another multivibrator, the output of which is a multiple of 60 cycles. It is fed to a width control circuit where the pulse width may be adjusted to 10% of the cycle over the entire frequency range. This pulse constitutes the horizontal bar signal, adjustable from 12 to 36 in number, which is mixed with the vertical bar signal. Thus both the H and V bars may be obtained simultaneously at the output when desired. The mixed signals are held to approximately equal levels by the limiter stage. Output magnitude is adjustable to allow contrast control. Standard 60 and 15,750 cps signals from the sync generator are used to sync the grating generator. The standard blanking signal from the sync generator is shown connected to a polarity control stage, with the output taken from either cathode or plate circuit depending upon the desired polarity. Separate tubes having a common load combine the bar and blanking signals. The blanking signals may be turned off when desired by means of the control shown on the control panel.

Blanking is used when, for example, a test pattern signal from a studio camera or from the monoscope tube (section 3.10) is to be checked for linearity prior to transmitting. Fig. 6.1C illustrates this function. In this case the output of the grating generator is fed into one channel of a distribution amplifier rack, the monoscope camera output being fed to another channel. With the output of the two channels fed to the master monitor. All camera control unit monitors and other monitors in the system are then adjusted with the correctly aligned master monitor. Quite often, field equipment is aligned in this manner prior to remote pickups.

While monitor alignment demands a certain feel gained only by experience, the new operator may obtain just as accurate results by taking a little longer, and observing the following general routine. It is imperative that he first become familiar with the controls and their purpose of his particular equipment.

It is assumed that the monitor has been initially set up, with picture tube properly positioned so that the raster is straight, and focusing and deflection coils properly aligned. It is further assumed that the sync generator is delivering properly shaped and timed pulses to the system. After the equipment has been turned on for about 10 minutes, the raster size may be checked for the approximately correct aspect ratio of 4 units wide to 3 units high. Controls associated with this adjustment on chassis or rear panel are the HEIGHT CONTROL, adjusting vertical size, and the WIDTH CONTROL, adjusting horizontal size. In some monitors these are marked "V Size" and "H Size." In any case, the first adjustment is not critical since any adjustment of linearity controls will alter to some extent these initial adjustments. The CENTERING control should be set to place the raster in the middle of the screen.

It is now assumed that the Grating generator is operating properly with the necessary H and V driving pulses and blanking signals applied, and working into one channel of a distribution amplifier rack. The signal output of the monoscope camera or studio camera focused upon a test pattern is delivered to another channel, and the combined outputs are being fed to the video signal input terminals of the master monitor. Both the VERT BARS and HOR BARS switches on the control panel of the Grating generator are "On," and the H and V RANGE switch placed upon the desired range of produced bars. The FREQUENCY control for each is then varied to result in the exact number of bars desired. The WIDTH control for each is then varied to give a very thin line (only 10% of the spacing between bars) which gives an excellent check on linearity of sweep. The polarity switch is then thrown to

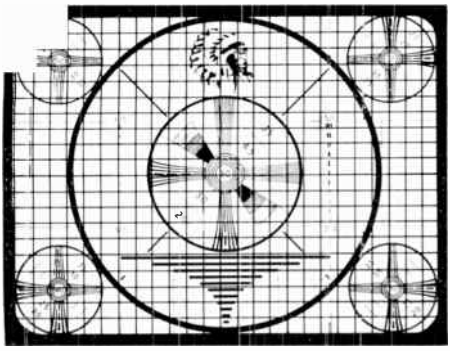

Figure 6.1C. Indian head pattern from monoscope camera with grating bars superimposed.

the desired signal polarity; in this case, since the monoscope signal output is black negative, the Grating generator is likewise set. It is recalled that the monoscope (section 3.10) has two outputs, one for a monitor and one to feed a following distribution amplifier. It is best to leave the monoscope monitor connected, and feed the distribution amplifier output to the input of the master monitor. This allows simultaneous alignment of the monoscope monitor with the master monitor, and keeps the output terminals properly loaded. The output gains of each unit are now adjusted to obtain proper ratio of the two signals on the master monitor picture tube, as in Fig. 6.1C. Since the brightness of the two signals are added together, the relative output voltage will be only approximately half that required if either signal were used alone, with the monitor brightness control set for normal operation.

The FOCUS control on the monitor should now be double checked for proper electrical focus. The lines of both the bars and the test pattern should be as thin as possible to obtain by this control. The pattern should now be well defined, although the linearity may be off. Assume, for example, that the horizontal bars are crowded together toward the top. This indicates bad vertical linearity. The H bars may also be "stretched" in the center with crowding at both top and bottom, or crowded only at bottom. In any case, the V Lin control of the master monitor must be adjusted until even spacing of all horizontal bars occurs. Any "bending" of the bars indicates stray magnetic fields.

As previously pointed out, adjustment of the V Linearity control may affect the height (vertical size), especially if the correction necessary is large. Therefore, re-adjust the HEIGHT control to normal. Any correction now necessary will be a vernier one for linearity, and the process is repeated until correct linearity and correct V size occurs.

If at this time the vertical bars are noted to be uneven, the horizontal linearity controls must be adjusted. When the operator becomes familiar with his specific monitor, the portion of the raster upon which H non-linearity occurs will provide the clue as to which control to adjust first, since one control may affect overall linearity, other H LIN controls affecting right and left hand portions. Keep in mind that the control associated with the damper tube in the H deflection circuit affects the sweep on the left portion of the picture, and controls in the driver tube affect the sweep on the right side. Again, it may be necessary to re-adjust the WIDTH control to obtain the proper aspect ratio.

After the sweep circuits have been properly adjusted by the bars, the monoscope or test pattern signal under the bars must be carefully observed. Interpretation of the test patterns is detailed in the next section; suffice it to say here that the monoscope camera or studio camera trained upon a test pattern may now be adjusted in linearity until it is properly reproduced on the master monitor screen, with no fear that some non-linearity in the monitor sweep is compensating an opposite non-linearity in the camera. The test pattern signal may now be fed to the transmitter. Since it is now certain that the test pattern configuration is correct, the transmitter operator may adjust his own monitor which is across

the incoming line for linearity as determined by the test pattern signal. Some stations, however, make it a practice to align transmitter monitors by the bar system also, so that any possible errors in the interconnecting links may be noted. This monitor, then, when switched to the output of the transmitter, will detect any non-linearity occurring in the video transmitter.

The test pattern signal, when once properly aligned by the adjusted master monitor, should be fed through the general control room distribution system, and all monitors properly adjusted to indicate accurate reproduction on the picture tube screens.

6.2 Setting Up the Camera Chain

For the purpose of completeness, it will be assumed that the pickup head is to undergo the initial adjustment procedure "starting from scratch." It must also be assumed at this time, however, that the sync generator is operating properly and is delivering the required signals from a distribution amplifier to the camera control unit in the control room. Also to be assumed is that the camera control unit picture monitor has been properly aligned with the master monitor as suggested in Section 6.1.

The set up of a camera chain now involves two components; the camera itself, and the camera control unit in the control room. There is a wide latitude in set up procedure at the present time, and the discussion here is a composite of manufacturers hints and practicing operators' suggestions. The reader will find some variance in practice from the general outline due not only to variance in equipment, but in individual engineers' estimates of optimum methods.

To develop greater familiarity with names and locations of the controls mentioned, Fig. 6.2A (1-3) is presented. The controls on the Du Mont camera were shown in Section 2.3. Fig. 6.2A(2) shows the controls on the rear of the RCA Type TK-30A camera. Fig. 6.2A (3) illustrates the field type camera control unit, since the controls involved in pre-program setup are more clearly

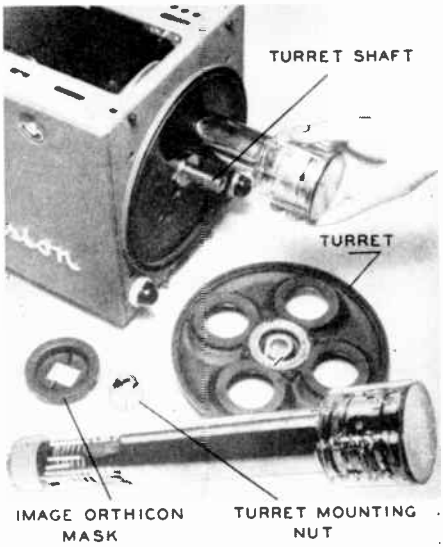

Figure 6.2A. (1) Installing image orthicon tube in pickup head.

shown on the front panel than is the case of the studio type. This field type, incidently, is found in use in a number of control rooms. Section 6.4 which concerns program operation of the camera control unit will then consider the studio type for completeness of presentation.

IT IS EXTREMELY IMPORTANT THAT THE READER BE FAMILIAR WITH THE BASIC THEORY OF THESE UNITS AS PRESENTED IN THE PRECEDING CHAPTERS BEFORE GOING INTO THE OPERATIONAL FUNCTIONS OUTLINED IN THE FOLLOWING TEXT.

The image orthicon tube is installed or removed directly behind the lens turret as shown in Fig. 6.2A(1). The tube is installed in line with the hole in the deflection assembly and engaged in the annular socket, keyed by pin No. 7. The white radial line on the face of the bulb is placed "down" and the white longitudinal line on the neck is "up."*

*Check your own specific equipment, as this condition could be reversed. It is standard for the lines to be either at top or bottom after installation.

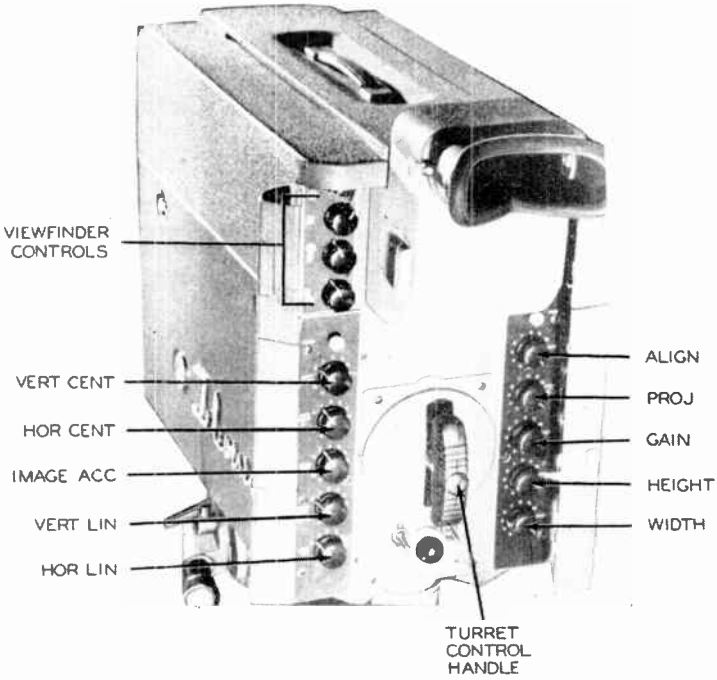

Figure 6.2A. (2) Rear view of RCA Camera with rear doors open to show camera controls.

The shield is then fitted into place over the tube opening, the turret slipped on the turret shaft and locked with the turret locking nut. The diheptal socket is then placed on the 14-pin base.

Upon initial setting and checking of voltages applied to the socket terminals, it is most convenient to remove the image orthicon tube so that damage is not possible to the orthicon upon initial voltage adjustments, that may not be normal. The side and rear hinged covers are opened, and all sweep controls placed in the middle of the operating range, except the HEIGHT and WIDTH controls. These should be set at maximum sweep. (The reason for this is pointed out later).

The first adjustment is one which seems to be universally agreed upon, since it is the basic adjustment upon which all further alignment procedure depends. This is the adjustment for 65 to 75 milliamperes *focus coil* current. Du Mont cameras of the 5098-A type should have 65 ma; the RCA cameras should be adjusted for 75 ma focus coil current. This is measured by inserting a 0-150 ma meter in jacks provided either on the camera head, control unit, or power supply. No attempt should then be made in the subsequent alignment to alter performance by varying this current. This is so because the focus field developed by the focus coil current determines both the orthicon focus voltage (the beam focus at the long cylindrical wall coating G-4) and the image focus (at the photocathode of the image orthicon). Therefore, any change in this value requires re-adjustment of all other controls which are normally used in aligning the camera chain. Focus coil current is usually variable by a screwdriver adjustment control on the power supply chassis.

The IMAGE FOCUS control on the camera control unit, observe Fig. 6.2A

(2 & 3) during following discussions, may now be adjusted so that, in conjunction with the standard value of focus coil current, the voltage at the photocathode terminals is approximately 450 volts (negative). This may be measured at the terminal strip in the pickup head.

If the camera employs a high voltage switch adjustment in the pickup head, it should be set to 1250 or 1500 volts, depending upon type of image orthicon used. (Section 2.2). This voltage should be checked with a 20,000 ohm/volt meter at the proper terminals on the terminal strip.

The TARGET voltage control on the camera control unit should be turned to zero, or extreme counter-clockwise.

Set the ORTH FOCUS (orthicon focus) control on the camera control unit so that, in conjunction with the standard focus coil current, the voltage at the wall coating (Grid-4) terminal of the image orthicon is plus 180 volts.

Set the Decelerator (G-5) voltage to approximately plus 25 volts. This control in the RCA camera is available through the hinged door on the right side of the pickup head.

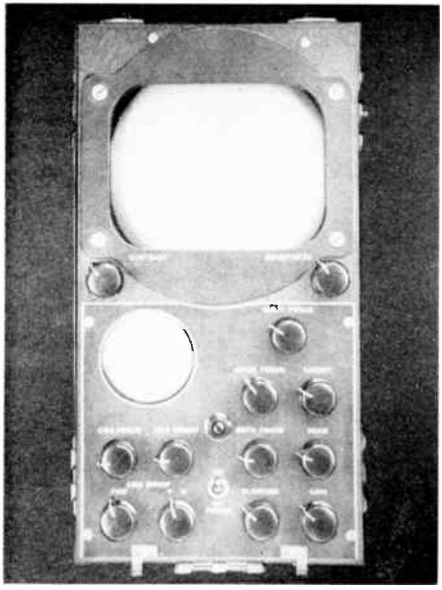

Figure 6.2A. (3) Front view of operating controls on RCA field type camera control unit.

As an initial start, adjust MULTI FOCUS (multiplier focus, or G-3 in image orthicon) to approximately plus 200 volts.

Turn the ALIGNMENT coil current potentiometer on the rear of the pickup head to zero, or extreme counter-clockwise.

Turn BEAM current control extreme counter-clockwise (maximum bias on orthicon G-1).

Install the image orthicon tube as described previously. Turn on all equipment and allow to heat for at least 30 minutes prior to the rest of the alignment procedure. It would be very convenient at this time for the beginner to review all of sections 2.2 so that the functions of the various elements of the image orthicon tube will be fresh in his mind.

Before the camera is first turned on, the lens are capped with a lens cover so that no light is allowed to fall upon the photocathode of the orthicon. It is also common practice to leave the lens capped in this way during the preliminary alignment adjustments which immediately follow. Although some operators prefer to train the camera upon the test pattern immediately and start adjustments to result in clear transmission of the test pattern signal, the more precise method (especially for the "freshman") is as follows.

First to be considered is the alignment of the scanning beam from the electron gun to the target. The necessity for this arises from the fact that some slight mechanical misalignment of the electron gun with respect to the longitudinal axis of the tube causes a tilting or swirling image when no correction is applied. This correction takes the form of a current passing through an *alignment coil*, which is around the neck of the tube adjacent to the electron gun emitter, and is rotatable by means of a slot through which a nonmagnetic screwdriver may be inserted to turn the coil. The current through it is termed the *alignment coil current* and is varied by the control shown on the rear of the pickup head. It is recalled

that this adjustment is started from zero value.

This adjustment, as do all adjustments in the camera chain, requires close co-operation between the camera operator and the camera control unit operator. The viewfinder H and V sweep size and brightness controls are adjusted to obtain a raster, with contrast (gain) control full open and the camera preamp gain control full open. The camera control unit operator also adjusts his picture monitor to obtain a visible raster of the approximately correct aspect ratio. (This is normal if the monitor has been checked against the master monitor previously). The BEAM current control on the camera control unit, which actually sets the bias of G-1 on the image orthicon, is now slowly turned up (clockwise) until "noise" (salt and pepper appearance) is visible on the viewfinder and control unit monitors. (The lens should be tightly capped during this procedure). The TARGET control on the control unit is now also turned up, until spots appear on the monitor screens. The MULTI FOCUS control may have to be varied slightly to make them clearly visible. These are known as "dynode spots" which result from the first dynode of the electron multiplier when no light falls upon the photocathode. The control unit operator now adjusts his ORTH FOCUS control (remember that this affects the wall-coating G-4 in conjunction with the crossfield from the focus coil) until he obtains the best "focus" of the spots. This means that the spots are made as small as possible by this adjustment. He then rotates this control right and left through "optimum focus" and notes the action of the spots on the picture tube. If the electron beam is properly aligned, the focus of the spots will change, or they may become elongated in one direction with rotation of the ORTH FOCUS in one direction, and elongated in the opposite direction when the control is varied in the other direction. In either case, assuming perfect beam alignment, the spots will stand still.

If the beam is not traveling straight down the axis of the tube, these spots will rotate or "swirl" around as the ORTH FOCUS control is varied through optimum focus position. If an image were being transmitted, a tilt would occur upon any slight change in constants involved. The first procedure now involves the camera operator, who begins to increase the ALIGNMENT coil current control. Actually, very little current should be necessary, and if an adjustment throughout the full range of the control does not alter the travelling condition of the spots as the control unit operator varies the ORTH FOCUS control on his unit, the alignment coil itself must be rotated by means of a screwdriver. (See Fig. 8.9D, Chapter 8). This is carried out in practice by the camera operator who turns the coil while simultaneously increasing the ALIGNMENT control in small steps. A certain position of the coil and current control will be hit where the spots stand still as the ORTH FOCUS control on the control unit is varied. The scanning beam is now properly aligned between gun and target. It will be noted at this time that the dynode spots change focus with a variation of the ORTH FOCUS control, but do not have a tendency to travel around the screen.

It is important to point out at this time that there is no standard terminology for controls on pickup heads and control units. On the Du Mont control unit, for example, the IMAGE FOCUS mentioned previously is termed the PC FOCUS (photocathode focus), and the ORTH FOCUS is termed the BEAM FOCUS. It is therefore very important for the reader to associate each control with the action on the orthicon so that principles of equipment set up are better visualized. Fig. 6.2B is presented to emphasize the purpose of the controls, and should be observed during the following outline of set up procedure.

The station test pattern is now placed upon an easel in the studio at the same height as the camera lens. The test pattern is normally imprinted upon a card 18 x 24 inches. A spirit level is

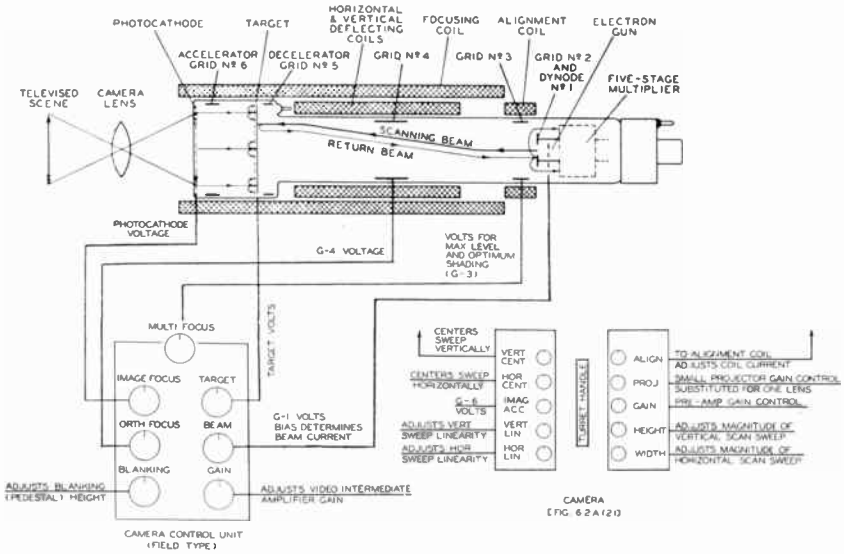

NOTE: The second control from top on right-hand side (marked PROJ), is used to control the gain of a small projector for slides or closed film loops attached in place of one of the lens. In the RCA field-type camera, this position is occupied by the SHADING control, since the field camera-control unit does not contain a shading control. In the RCA studio camera shown above, the shading control is in the studio type camera control unit, described in Section 6.4.

Figure 6.2B. Purpose of camera and control unit controls. Viewfinder and monitor controls not shown. (RCA terminology on controls.)

used to obtain exact level of both the card and the camera lens. The turret-to-pickup tube alignment is such that the lens on top is the one in front of the pickup tube. The pattern is illuminated with at least 20 foot-candles of light for the 5820 or 2P23 pickup tube. The camera is set for approximate optical focus by the knob on the side of the pickup head, and the iris of the lens used should initially be adjusted to a very small opening such as f:16 or f:22.

It should now be recalled that one of the initial adjustments mentioned earlier was that of turning the HEIGHT and WIDTH sweep controls to maximum. This condition is termed *overscanning* the target, and is used in all initial adjustments and even to a smaller extent during long rehearsals. The reason for this is to prevent *underscanning*, which can seriously damage the sensitive area of the target since this area which has been underscanned over a very long period will become visible in the picture when full-sized scanning is restored to operation. What actually happens is that the target underscanned area changes in target cutoff voltage value (discussed later) from that amount of the area which is not scanned. Thus the smaller "raster" becomes visible in the picture for normal scanning.

The reader should at this time observe what happens upon either underscanning or overscanning conditions, since these characteristics are deliberately used for short periods of time in certain tests as pointed out later. Assuming that the monitor and viewfinder has been checked for normal operation and raster size as outlined in section 6.1, if the target is *underscanned*, this sweep is spread out across the monitor screen by its own normal sweep amplitude adjustment, resulting

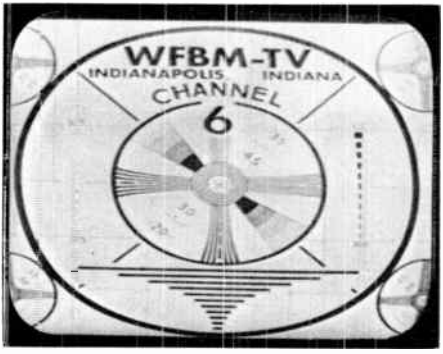

Figure 6.2C. Appearance of test pattern on properly aligned monitor tube when target is underscanned horizontally. Courtesy WFBM-TV.

in a *larger-than-normal* picture. For example, if the target is underscanned in the H direction, the image appearing on the properly aligned monitor screen will appear as in Fig. 6.2C. Actually, this photo illustrates only a slight amount of underscanning, and this amount could be increased until only a portion of the center of the test pattern appeared, spread out across the raster of the monitor tube. This is sometimes deliberately done by the operator for a very short period to closely examine the vertical characteristics of the sweep circuits. If the target is underscanned vertically by the V HEIGHT sweep control, the image appears as in Fig. 6.2D. This is also sometimes deliberately done to examine the raster for proper interlacing. *Overscanning* the target produces a *smaller-than-normal* picture on the monitor screen.

Normal adjustments for the HEIGHT and WIDTH sweep controls are determined after some semblance of a picture is obtained in initial setup, by bringing the controls back from maximum position by an amount to cause the corners of the target to just disappear. This is the NORMAL, or ON-AIR scan, also termed *full-scan*. For the rest of the set up procedure, however, it is advisable to use a little more overscanning for reasons already mentioned, and the corners of the target should be visible in the picture.

It was necessary to present the above discussion a little ahead of the actual sequence of events in camera chain set up. It is recalled that the procedure has included only the alignment of the electron beam, progressing to the point where a picture of the test pattern is to be attempted. The BLANKING control on the control unit should be adjusted with applied video signal so that the pedestal height is normal on the waveform scope as outlined in section 3.5. The preamp GAIN control on the pickup head is already full on. The GAIN control of the intermediate video amplifier on the control unit should be at approximately mid-position.

The camera control unit operator may now increase the BEAM control, reducing the bias on G-1 until the picture appears. Initially, there may be more "noise" than test pattern signal. When this occurs, the operator raises the TARGET voltage until the picture-to-noise ratio improves. The voltage on G-3, which is the MULTI FOCUS control on the control unit, may have to be changed from the initial setting of 200 to 225 volts before the picture improves. This control should be varied for maximum video amplitude as indicated on the waveform oscilloscope. It should now be varied to judge the effect on picture shading, since this control affects shading to some extent. Shading may be estimated better on the waveform scope than by picture observation especially in the initial stages of adjustment where the

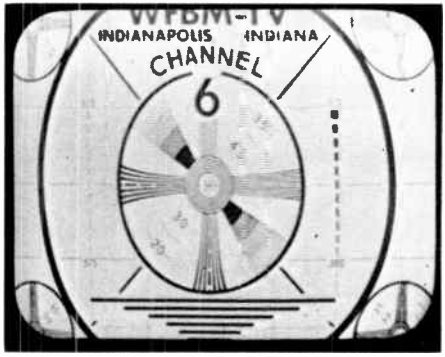

Figure 6.2D. Appearance of test pattern on properly aligned monitor tube when target is underscanned vertically. Courtesy WFBM-TV.

picture is not yet perfect. Optimum shading occurs when the video on the waveform scope (for test pattern signal) is as nearly uniform in level as possible. It may be found in practice that optimum shading does not occur at the point of maximum signal. Usually this variation is slight, and the MULTI FOCUS is adjusted just to one side of maximum signal where optimum shading does occur. (More on this later).

If the video is still noisy, the camera operator tries to improve the picture by checking optical focusing, and increasing the lens iris opening to a wider stop. The control unit operator then readjusts BEAM current to attempt a compromise between brilliance of picture and noise level. The TARGET voltage control is varied to obtain optimum results. A target voltage too low washes out the picture. If too high, the operator may note a "swirl" effect as if the picture were under water. At this time, the operator adjusts BEAM current and TARGET voltage simultaneously to obtain the best possible reproduction.

The picture may then be further improved for sharpest focus by slight readjustment of ORTH FOCUS (G-4 voltage) and IMAGE FOCUS (photocathode voltage). The camera operator may then need to vary the IMAGE ACC (G-6) control for maximum results and minimum "S" distortion (illustrated later). This voltage should be in the vicinity of 80% of the photocathode voltage. (Section 2.2).

After optimum results have been obtained by the above procedure, it may occur that the test pattern is fairly good except at the corners, where bad resolution may be apparent. It should be recalled that the Decelerator (G-5) affects the corners of the raster, and was initially adjusted to plus 25 volts. This control (on the right-hand side in RCA cameras) should now be varied by the camera operator until the corner resolution is as near equal to the center of the picture as possible.

After a semi-satisfactory reproduction is achieved by this procedure, the "refinements" of adjustment for best possible transmission come into practice. It is necessary here for the reader to be thoroughly familiar with interpretation of test patterns.

The television transmitter committee of the RTMA has developed a standard test pattern to check all important features of both studio-transmitter facilities and receivers. This chart is illustrated in Fig. 6.2E, with the addition of explanatory letter symbols for the most commonly used features. Getting acquainted with the characteristics of this chart will serve to familiarize the reader with any chart likely to be used by stations in practice. Although there are other features that may be checked by this chart, the 4 basic conditions may be measured as listed below. Other points will be mentioned later in their place. Actual use of the test pattern in aligning the camera chain is also described after this brief introduction.

(1) SCANNING. Adustments here involve size, linearity of sweep and aspect ratio. With the chart focused so that its area (boundaries determined by the white arrows shown along the edges) exactly covers the usable area scanned by the camera, and the resulting picture observed on a properly aligned monitor, an accurate setting of the aspect ratio of the pickup camera is obtained. The 4 shading strips form a square with correct aspect ratio.

Now observe points (C) in Fig. 6.2E. These vertical bars in the center and each side of the pattern serve to check horizontal linearity. The camera H sweep is adjusted by comparing the spacing of the vertical bars in the square at each side of the pattern with that of the bars in the center square.

Vertical sweep linearity is adjusted in a similar manner by comparing the spacing of the short horizontal bars at both top and bottom of pattern with that of the bars midway between (point D in Fig. 6.2E).

(2) SHADING. This factor is judged in a combination of two ways. By visual inspection of the reproduced test pat-

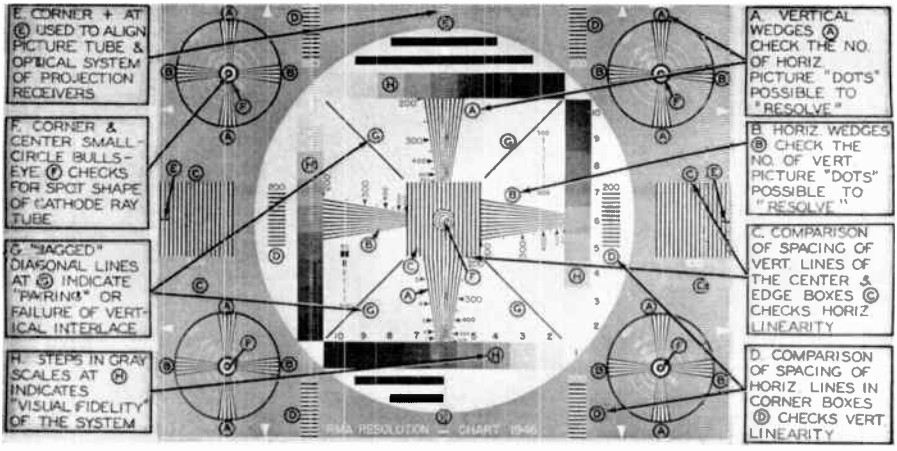

Figure 6.2E. RTMA Televisian resalutian chart.

tern signal on the monitor screen to determine if the background is an even gray, and by noting whether the average picture axis is parallel to the "black level" line on the oscilloscope waveform monitor. (Section 3.5.) This means that the tops of the waveform on the monitor scope should be relatively flat, forming a line parallel to the lines on the screen.

(3) PHASE SHIFT. An effect of "streaking" immediately before and after the four horizontal black bars (2 at top and 2 at bottom) of the large circle is an indication of high or low frequency phase shift in the video amplifiers. If such is noted, the camera and control unit operators may affect slight adjustment of the "high peaker" stage (usually a screwdriver adjustment on the amplifier chassis), which changes the value of resistance across the peaking coil. If this does not remedy the condition, maintenance procedures are necessary as described in Chapter 8. This phenomena is usually caused from phase distortion in the low-frequencies.

(4) FOCUS. There are two conditions of focus, optical and electrical. Either one affects the *resolution*, or amount of fine detail in the picture. All electrical controls associated with focus are adjusted for maximum resolution reading. The fan shaped wedges, A and B of Fig. 6.2E, in both horizontal and vertical directions are composed of lines whose width and spacing gradually decreases as the lines approach the center. Observing the point at which the lines are no longer distinguished from one another gives an estimate of the "resolving power" of the system under test. It is observed that numbers are adjacent to these wedges, which indicate the corresponding number of lines being reproduced. For example, if the lines on the vertical wedge in the upper portion of the large circle "merge" opposite the number 400, the *horizontal resolution* may be taken as 400 lines. Similarly, if the individual lines of the horizontal wedges were indistinguishable below the number 300, the *vertical resolution* is 300 lines. Corner resolution, which is usually less than resolution through the center of the picture is determined by similar wedges in the four corner circles of the pattern. Practical limitations of present TV systems allow a maximum resolution of about 360 lines vertically and 425 lines horizontally (section 2.3).

We may now proceed with the set up of the camera and camera control unit. If the operators have repeated the foregoing process until no further improvement occurs, and if the picture is still "noisy" or inferior in content, the camera high-voltage tap switch should be

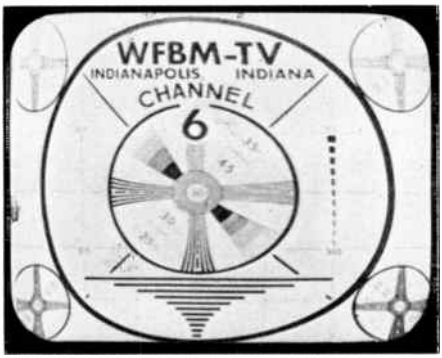

Figure 6.2F. Horizontal sweep non-linearity. Courtesy WFBM-TV.

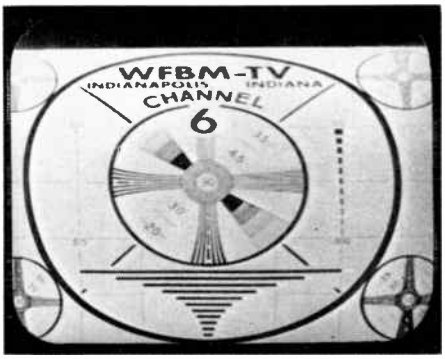

Figure 6.2G. Vertical sweep non-linearity. Courtesy WFBM-TV.

reduced to the 1000 volt setting. Image Orthicon characteristics given in section 2.2 indicate a high voltage range between types of tubes from 1250 to 1500 volts. However, there is some discrepancy in individual orthicons of the same type, and overloading of the dynode section does occur in some instances with the normal high voltage applied. If the picture is improved by the lower voltage setting, leave the tap on this setting.

The reproduced test pattern should now be sufficiently good to allow linearity adjustments. Readjust the HEIGHT and WIDTH controls on the camera for the approximately correct aspect ratio, remembering to continue a slight overscan so that the picture on the aligned monitor is slightly less-than-normal dimensions. Observe the test pattern for horizontal linearity. Bad horizontal linearity is indicated as in Fig. 6.2F. In this specific case, most of the non-linearity is occurring at the left and center of the sweep crowding the center circle into an oval. In the RCA system there are two linearity controls for the H sweep, only the one on the left rear of the camera illustrated here. This control is in the damper tube circuit, hence mainly affects the sweep on the left side of the raster. The other H LIN control reached through the left-side hinged door (see Fig. 7.3, Chapter 7) is in the driver tube circuit, and affects the sweep through the center and right-side. The operator will find in practice that both these controls need adjustment simultaneously for correction of H linearity. Also as pointed out earlier, the WIDTH control on the camera will need to be readjusted.* In the specific case illustrated by Fig. 6.2F, the control shown on the rear of the camera, H LIN, in conjunction with the WIDTH sweep control, is usually sufficient to correct the linearity.

If the pattern should appear as in Fig. 6.2G, it is necessary to adjust the VERT LIN control on the camera. Adjustment of this control in conjunction with the HEIGHT control should result in correcting this V non-linearity. If repeated adjustments of linearity controls does not result in proper pattern, the camera is turned over to the maintenance department for checking (Chapter 8).

*The complete schematic of the RCA camera and technical details are included in section 8.9.

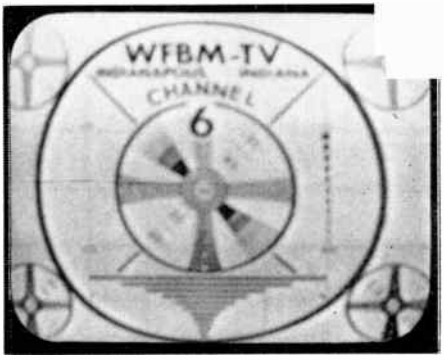

Figure 6.2H. Bad optical or electrical focus. Courtesy WFBM-TV.

During these procedures, the centering controls, VERT CENT and HOR CENT, are adjusted to center the pattern. At this point, then, proper linearity has been achieved and the 3 to 4 aspect ratio has been established.

At this time and during all of this procedure, the camera operator assures that this optical focusing is correct by going through maximum focus with the knob on the side of the camera which runs the image orthicon tube and coil assembly on tracks behind the lens. All controls which affect electrical focus should be adjusted only under the assurance that optical focus is optimum. Fig. 6.2H illustrates the fuzzy appearance of the test pattern with improper focus, either optical or electrical. If focusing trouble is encountered, the operator should check to ascertain that focusing current through the coil is of such direction that a north-seeking pole is attracted to the *image end* of the focusing coil.

From an initial start, the operator will discover that best focus is first obtained through the central portion on the test pattern reproduction. He may, for example, obtain about 400 lines resolution horizontally as indicated by the center resolution bars, but only about 300 lines H resolution in the corner indicators. Some difference must be expected between center and corner resoluation, but if the difference is great, the camera operator must attempt better results by adjustment of G-6 voltage (IMAGE ACC) control, and G-5 control. The corner patterns should be well within the monitor mask with overscanning in the camera, and should be closely observed as IMAGE ACC and G-5 controls are varied for maximum corner resolution. It is noted that as G-5 is varied over a very wide range, optimum shading condition is departed from as indicated on the waveform oscilloscope. Therefore the MULTI FOCUS control must again be touched up for maximum level and optimum shading as described previously. Also, most modern cameras and/or control units use special shading circuits in addition to G-3 (MULTI FOCUS). See section 3.4. In the RCA system, a horizontal shading knob is accessible on the studio-type camera control unit.* These should be adjusted for maximum shading results as judged on the picture monitor and oscilloscope. When once adjusted for a particular image orthicon tube, no further adjustments need be made under program conditions. This is one major advantage over the iconoscope type tube which requires continual adjustment of shading of more complicated combinations of correcting waveforms (section 2.6 and 6.7).

The IMAGE ACC control (G-6 voltage) mostly affects an "S" type of distortion as indicated in (1) of Fig. 6.2I. This is most noticeable on a straight line through the center of the picture, such as the horizon on a flat landscape scene, but may also be observed at the top and bottom edges of the raster. Adjustment of this G-6 control fixes the ratio of photocathode to image accelerator voltage, and when correct, no such distortion occurs. In (2) of Fig. 6.2I is

*Later changes in RCA equipment including both horizontal and vertical shading are described in section 8.9.

1

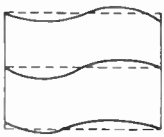

"S" type of distortion caused by improper adjustment of IMAGE ACCELERATOR control on the camera. This control adjusts the ratio of photocathode to image accelerator voltage. The effect is most noticeable on a straight line through the center of the raster. The appearance is that of an "S" on its side.

2

Type of "S" distortion caused by low-frequency modulation (such as 60 cycle) of the horizontal scanning beam in the camera. The effect is most noticeable at the edges of the raster, but also affects the picture content through the entire raster.

Figure 6.2I.

Figure 6.2J. Scanning tilt caused by improper positioning of deflection yoke in camera. Courtesy WFBM-TV.

illustrated a different type of "S" distortion caused by low-frequency modulation of the horizontal scanning beam. Where this type of distortion occurs, the camera should be turned over to the maintenance department (Chapter 8).

One characteristic which actually may have been apparent from the start is that of a "tilted picture." In this case we are not concerned with the tilting or traveling that takes place when the ORTH FOCUS control on the control unit is varied under improper alignment conditions. It is assumed here that the camera has undergone proper beam alignment as described previously, but that the pattern image is tilted as in Fig. 6.2J. It must be assured that the pattern is level with the camera lens horizontal axis by means of a spirit level as stated before. This condition indicates a *scanning tilt*, caused by improper positioning of the image orthicon yoke assembly. Therefore it is necessary to rotate the yoke for proper alignment of the scanning with the horizontal raster. It should become apparent now why initial beam alignment procedures as described in the first part of this section are so important. DO NOT ADJUST SCANNING TILT BY ELECTRICAL FOCUSING CONTROLS.

It should also be pointed out at this time that the camera should not be left trained on a test pattern or any fixed object over too long a period of time. The reason for this is that a "burn-in" tendency occurs which places the pattern permanently on the photosensitive surface of the tube. A camera being aligned by this procedure should be left on the pattern only about 10 minutes at a time, then given a short rest with lens capped. Some operators have found it advisable to train the lens on a white or matte surface, illuminated with a low-intensity light, for a few minutes at intervals of the alignment procedure. The "sticking picture" effect also points up the importance of allowing the tube to reach optimum operating temperatures before uncapping the lens (section 2.2), since the high electrical resistivity of the glass target at lower-than-normal temperatures encourages retention of scene.

We are now ready to examine the two controls which most affect picture quality after initial alignment procedures are completed. These controls, found on the front panels of the camera control units, indicating constant attention during actual programming, are the BEAM and TARGET controls. For a given scene, lighting conditions and lens iris opening, there is an optimum ratio of target voltage to beam current. Since these conditions change from time to time in almost any program, the camera control unit operator must be ever alert to the functioning of these controls.

To better understand the TARGET and BEAM controls in relation to the image orthicon, the reader should be familiar with the typical signal output curves as illustrated in Fig. 6.2K. These curves show a typical output signal current in microamperes as a function of the highlight illumination on the photocathode of the image orthicon. It should also be realized by the operator that these curves are not immutable; for example the "knee" of the type 5820 may occur at values of highlight illumination on the photocathode ranging from the 0.01 foot-candles shown, to about 0.02. This variance between tubes of the same type emphasizes the importance of "matching" the cameras of any studio pickup. It is noted that sig-

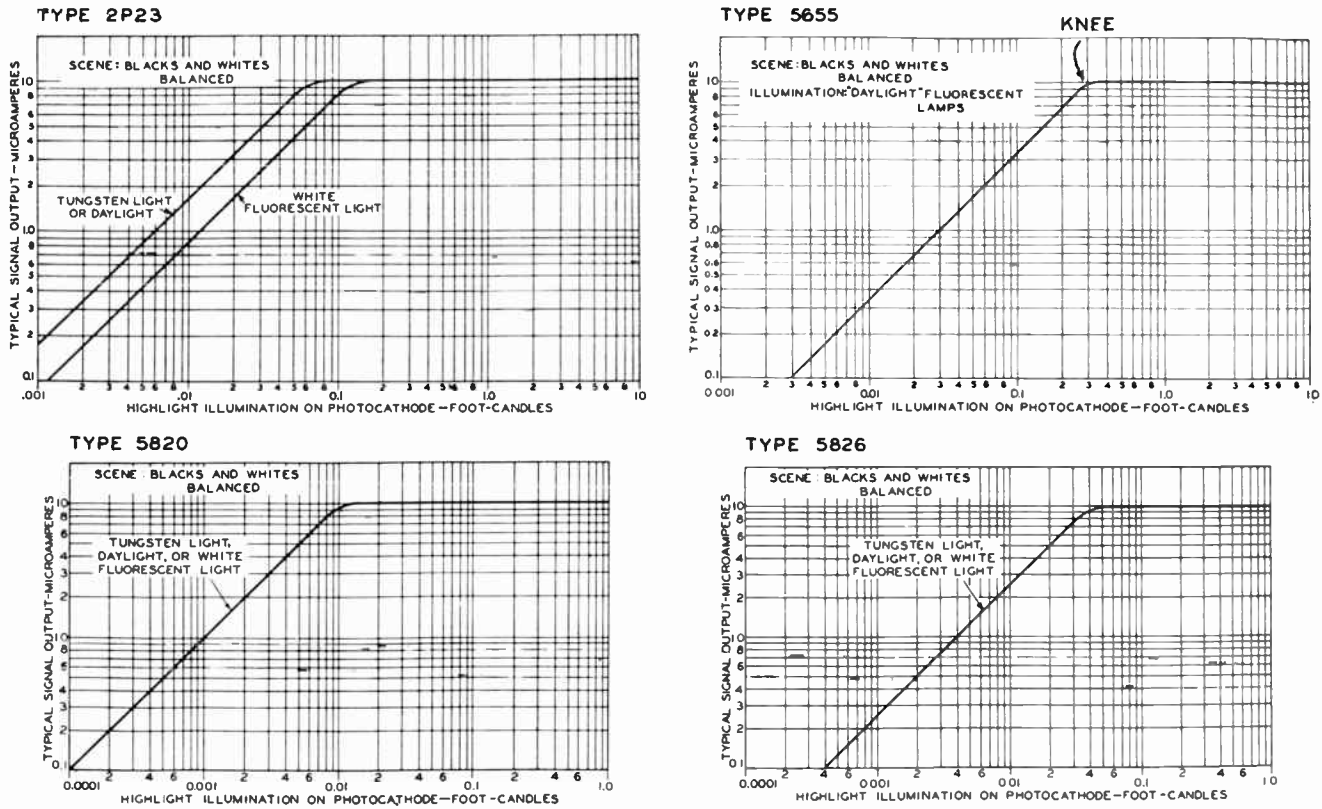

Figure 6.2K. Typical signal output curves of image orthicon tubes. Courtesy RCA.

nal output is linear over a logarithmic scale, and the image orthicon may therefore be considered to have a gamma of 1 (Section 5.5).

Suggestions on image orthicon operation as prepared by the Tube Department of the RCA Victor Division contain the following comments: "For the most natural appearance of televised subjects or scenes, it is recommended that the image orthicon be operated so that the highlights on the photocathode bring the signal output slightly over the knee of the signal-output curve for the particular type of illumination utilized. The knee is that point where the signal from the highlights begins to drop appreciably as the lens opening is decreased in size. Operation at this point is especially important for studio pick-up in order to obtain the best gray-scale in the picture and to reduce the possibility of image retention. Operation further along on the horizontal part of the curve will give pictures in which the subject has an overemphasized outline."

So that the reader may picture in his mind the effect of beam current and target voltage on picture quality, it is pertinent to start with the assumption that the foregoing alignment procedure has resulted in a good reproduction of the test pattern signal. At this time, then, as the scanning beam sweeps the portions of the target containing the black part of the test pattern, all of the electrons are returned to the miltiplier section in the return beam. Conversely, as the scanning beam sweeps the highlight portions of the test pattern, only a small fraction of the electrons return since most of them are collected by the positive charge at that point on the target. Therefore, the *percentage modulation* of the beam is high, and good signal-to-noise ratio exists.

Suppose at this time that the camera control unit operator deliberately increases the beam current. As before, all of the electrons are in the return beam for black portions of the scene. In the highlights, however, only that number of electrons necessary to neutralize the positive charge of the target will be extracted. Since the beam current has been increased, only a small *percentage* of electrons in the total beam will be removed, and the return beam will be relatively high even for the highlights. The *percentage modulation* has now been drastically reduced. Since the *beam noise* increases as the square root of beam current, the signal-to-noise ratio is severely reduced. If the beam current is *decreased* from optimum value for a given scene and lighting conditions, it may be seen that the current is not sufficient to "hold down" or discharge the highest highlights, and severe "blooming" is noticed on the monitor in the runaway light portions.

Therefore, the operating rule for beam current shapes up as follows: for best signal-to-noise ratio, use just enough beam current to discharge the highlights in the given scene, determined by contrast ratio, reflectance of objects in the scene, amount of light, and lens iris opening. Under controlled studio lighting, producers strive to hold the contrast ratio within 30 to 1.

As was stated before, for any given scene and value of illumination, an optimum ratio between beam current and target voltage exists. Therefore any change in scenic characteristics calling for a change in either one, simultaneously calls for a change in the other. The range of the target voltage control is never more than —5 to +5 DC volts. To illustrate the action of target voltage, suppose the camera control unit operator deliberately reduces the target voltage (makes more negative) from an optimum value which was giving a good reproduction. As the target receives more negative potential, a point is reached where all of the electrons in the beam current are repelled to the return beam and the picture disappears. This then is the *cut-off voltage* required for the target in this particular image orthicon tube. (This value varies even between tubes of the same type.) *Actual target cutoff voltage is influenced by the amount of light reaching the photocathode.* If now the

target voltage is raised to just a fraction of a volt above cut-off until the picture just reappears, it will be noticed that the gray-scale is severely compressed with very poor resolution. With this low target voltage, relatively few of the total beam electrons are required to neutralize the "light" portions, and signal-to-noise ratio is therefore very low, as in the above example of too high beam current for normal target voltage.

It may now be realized that the more positive the target, the more the beam current required to discharge the highlights. Increasing both target voltage and beam current increases the sensitivity and output of the image orthicon up to a certain point. The upper limit from this standpoint is reached when the output ceases to increase, and resolution deteriorates. Output ceases to increase at the knee of the output curve. Resolution decreases with higher beam current due to the inability of maintaining a well-focused spot for discharge of the highlight detail. It is also recalled that beam noise increases with the square-root of the beam current.

In studio practice where the lighting is under control at all times, as well as the contrast ratio of the scene to be televised, it has been found that optimum value of target voltage is from 1.8 to 2.2 volts above *cut-off* voltage. For example, if a certain image orthicon has a target cut-off point of —1 volts (for a given scene), approximately plus 1 volt on the target will result in optimum results. If the cut-off point is 0, approximately plus 2 volts on the target is required. The beam current is then adjusted so that the highest highlights are adequately discharged (do not bloom on the screen) with optimum signal-to-noise ratio and best resolution of fine detail. The operator may find in practice a push-button key located on the camera control unit which allows quick check of optimum target voltage. The key is depressed and the target is adjusted for cutoff (picture disappears) and upon releasing the key, an increment of about 2 volts is automatically added to the target. Such adjustment is carried out when the particular camera is not on-air. Since actual target cutoff is related to the amount of light reaching the photocathode, adjustment is required upon a distinct change in scenic content, light, or lens iris adjustment. The beam current must then be re-adjusted for optimum picture quality. (Operational details in section 6.4.)

In the setup of camera chains, it is important not only that each individual camera is accurately aligned to a previously aligned master monitor, but also that the image orthicon tubes in all cameras involved be "matched" in operational functionings. Matching of two or more camera chains is definitely not necessarily accomplished by using the same type pickup tubes and adjusting the linearity of sweeps against a properly aligned master monitor. To avoid noticeable difference in picture quality when switching from one camera to another it is necessary that the tubes be balanced in color sensitivity, light sensitivity, saturation point and contrast range.

Special equipment has been developed to facilitate the alignment and matching of camera chains. One of these is illustrated in Fig. 6.2L. This is the Video Analyzer developed by Dr. Frank G. Back of the Back Video Corporation. The device consists of a low Kelvin incandescent light source, a precision

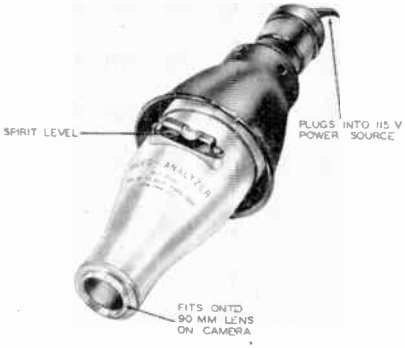

Figure 6.2L. (1) Video Analyzer. Courtesy Back Video Corp.

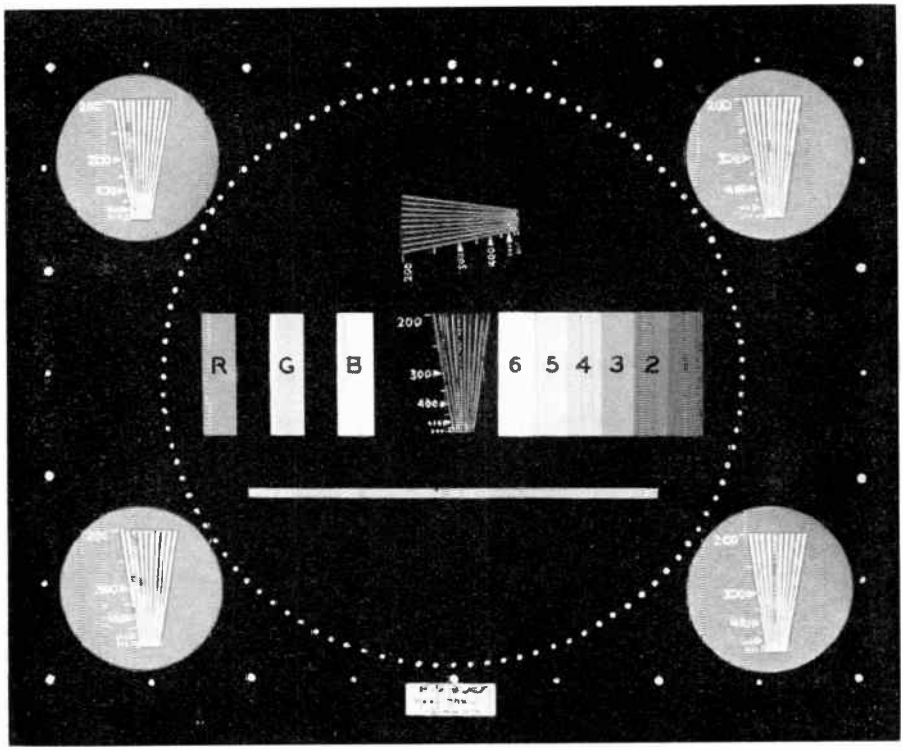

Figure 6.2L. (2) Test pattern of Video Analyzer. Courtesy Back Video Corp.

transparent test pattern, Fig. 6.2L(2), and a calibrated correction lens mounted in a light-weight metal housing having a telescoping barrel that fits directly on the TV camera's 90mm lens. A spirit level on top of the housing allows easy adjustment of the built-in test pattern for perfect horizontal alignment.

The Video Analyzer is mounted directly on the 90mm Ektar lens with the power plug connected to any 115-volt source such as the utility outlet on the camera itself. The test-pattern is illuminated by pressing a spring-tension hand switch. Since this equipment is used in well over 50% of the stations now on the air, and the popularity of this and similar methods will increase with advent of time, it is well for the reader to acquaint himself with the complete procedure as outlined below.*

PREPARING THE CAMERA FOR ANALYZER CHECKS. Before the camera can be checked with the Analyzer, the beam alignment of the image orthicon must be checked. To do this:

1. Mount the Video Analyzer on the 90mm Ektar lens and do not light it at first.
2. Set the beam and target, and then rotate the orth focus on the control unit left and right until the dynode spots (imperfections on the first dynode) are visible. Be sure that there is enough gain to see imperfections clearly on the monitor.
3. The imperfections should appear to go in and out of focus as the orth focus knob is rotated slightly through focus. If the alignment current and alignment coil rotation are correct, one of two things will happen: either the imperfections will change focus without changing their location on the screen, or they will be astigmatic in appearance, becom-

*ctsy Back Video Corp.

ing elongated in one direction while turning the knob clockwise, and elongated in a direction opposite to the first position while turning the knob counter-clockwise. If these imperfections travel on the monitor screen, the beam in the orthicon is not traveling down the center of the tube. This can be corrected by changing the alignment current on the camera, or if this does not help, turn the alignment coil with a non-magnetic screw driver and at the same time adjust the alignment current until the central portion of the image stands still as the orth focus is varied. Also, to minimize the effects of the magnetic fields on the final correct adjustment, the viewfinder must be in position.

4. Many times when the camera is in actual use, the dynode imperfections show up in the dark areas of the image and the tube will have to be de-focused. The smaller the imperfections, the less de-focusing will be necessary and the better the resolution will be over the entire screen area. Multiple small imperfections, therefore, are more desirable than a few large ones. However, if the small imperfections are too numerous, the whole image will tend to have a grayish cast with correspondingly poor resolution in the darker areas. It is important that all de-focusing always be done by turning the orth knob in a clockwise direction for RCA field cameras (from left to right), counter-clockwise for Du Mont cameras and RCA studio equipment.

Now make sure that the camera is level and that the Analyzer is level as shown by the spirit level. Close the 90 mm lens down to F:22.

You are now ready to proceed with the eighteen camera checks.

1. TURRET ALIGNMENT. Turret alignment is the first important camera check. In order to use full scanning, which is 24 by 32 mm, the optical center of each lens when it is in use must be the same as the mechanical center of the target of the image orthicon. Similarly, each lens when it is in use must be aligned along the same horizontal axis as the image orthicon.

With the Analyzer in place and positioned horizontally as shown by the spirit level, adjust for full scan. The barrel of the Analyzer should be telescoped to the second ring to give full scanning.

Next, switch on the Analyzer and study the position of the test pattern with respect to the target circle. You should be able to see the whole square pattern within the circle of the tube's target plate. If the pattern is not centered horizontally, but is off to the right or to the left, try to correct by readjusting the turret position. (On RCA cameras only: loosen the Allen screws on the turret shaft handle and twist the turret slightly either to the left or right as the case may be. When the pattern is centered horizontally on the target circle, tighten the Allen screws on the turret shaft handle. As you make each turret adjustment, make sure that the Analyzer is level, as shown by the spirit level, before checking the test pattern).

2. MECHANICAL ALIGNMENT OF ORTHICON ASSEMBLY. If the test pattern is off vertically (up or down) with respect to the target circle, the image orthicon assembly is out of position or out of alignment. This condition cannot be corrected in the field. It is a job for the maintenance shop. A possible exception is a loose top wheel on the carriage. This wheel does not need to turn and should be tight. (On RCA cameras only.)

3. OLD MOSAIC OF PREVIOUSLY SCANNED TARGET AREA. By checking for old mosaic, or previously scanned target area, you can determine whether the image orthicon can stand full scanning or whether under-scanning will be necessary.

Completely de-focus the camera optically. The test pattern then will appear as a gray spotty image on the monitor. Study the image for old mosaic. If any

is present, estimate approximately how much under-scanning will be necessary to eliminate the faulty portion of the tube's target. Make your estimate as a percentage — 5, 10, 15 or 20 percent — then pull out the Analyzer's telescoping barrel until the corresponding circular mark shows. Complete telescoped in position gives 10% overscan. The first mark represents 5% overscanning, the second one full scanning, the third one 5% underscanning, and the fourth one 10% underscanning. Finally, refocus camera. The Analyzer barrel should be left in that position for the rest of the checks.

4. VERTICAL AND HORIZONTAL IMAGE SIZE. Size and linearity checks must be made against the master monitor, which in turn has been checked and adjusted with the aid of a bar generator to insure its own linearity. The *importance of using a bar generator* to obtain perfectly linear monitor scanning cannot be over-emphasized.

First adjust for size. Then study the large dotted center circle and the twenty-eight edge dots and the four corner circles for linearity. The circles should be round and the dots should be evenly spaced for good linearity. If they are not, adjust size and linearity simultaneously for the best positioning and form.

5. VERTICAL AND HORIZONTAL LINEARITY. There are two horizontal linearity controls in the RCA camera. One is on the left-hand side which can be adjusted while the left-hand side of the camera is open. This control changes only the right half of the picture for linearity. The other horizontal linearity control is on the left back side of the camera and it changes the linearity on both sides of the picture. Both horizontal linearity controls have to be worked in conjuction with the width control, in order to obtain best results.

6. VERTICAL AND HORIZONTAL CENTERING. For vertical linearity, there is only one control knob on RCA cameras, which is on the rear left side of the camera, and this one has to be operated in conjunction with the height control.

Simultaneously center the image with the horizontal and vertical centering adjustments.

The required 3 to 4 aspect ratio is now established.

7. ADJUSTMENT OF IMAGE ACCELERATOR VOLTAGE. Refocus optically for best *center focus* of Analyzer pattern on monitor. (Resolution pattern in center.)

Now change image accelerator voltage and reset image focus until best resolution is obtained on the four corner resolution patterns. (Make sure corners are focused on monitor.)

8. SCANNING TILT. If the pattern seems to be turned in regard to the monitor screen, and if the camera is lined up horizontally, and if the spirit level on the Video Analyzer is also level, then a scanning tilt exists. To correct for this condition, slowly twist the entire image orthicon yoke assembly to bring the test pattern picture back into position.

Tilt should not be corrected by altering the image focus and accelerator controls!

9. FREQUENCY DISTORTION (STREAKING). Frequency distortion will show up in two ways — as a streaking of the horizontal bar in the image and as a distortion of the monitor's oscilloscope pattern that represents the gray scale.

If frequency distortion is present, try to eliminate it first by changing the high peaker adjustment. If this fails, look for some internal trouble in form of a gassy or overloaded video amplifier tube, capacitor leakage, a bad resistor, or some form of charge due to an open grid circuit, for example.

10. VERTICAL AND HORIZONTAL SHADING. This check is made by studying the four corner circles. All circles should present the same tone. Make certain that the multifocus has correct setting which can be observed

on the oscilloscope. Proper multiplier focus setting shows the highest signal output and smoothest shading. Be certain that alignment is correct before using shading controls.

11. SETTING OF G-5. The horizontal corner resolution can be observed on the four corner resolution patterns. As a rule, those four patterns have a slightly lower resolution than the center pattern, and this condition is normally not objectionable. However, if the corner resolution is considerably lower than the center resolution, it indicates that the G-5 setting is wrong. Try a different G-5 position (control is on the right side of the camera and can be reached only by opening the right side door). If the G-5 is set, the shading may have to be reset again. Sometimes a compromise has to be made between shading and corner resolution. However, most of the time, a bad shading with a good corner resolution indicates bad magnetic shielding around the orthicon tube. Slight variations in repositioning the Mu-metal shields which cover the orthicon tube assembly will improve the shading condition

12. COLOR RESPONSE. To check the tube's response for color, we use three color strips (red, green, and blue) and the six-step gray scale on the test pattern. Fig. 6.21.(2).

By checking the tones of the three color strips against the gray scale as they appear on the monitor, it is a simple matter to evolve a code number for identifying the color sensitivity of the image orthicon in the camera. Let us suppose, for purposes of illustration, that the tone of the red matches No. 2 in the gray scale, the green No. 3, and the blue No. 6. Since green occurs approximately in the middle of the visual spectrum we will, for the purposes of the color code number, always consider it as having a value of 5, half-way between 0 and 10. Then, since the red shows up one step darker than green when compared with the gray scale, we give it the code number 4. Similarly, since blue shows up as 3 steps lighter than the green on the gray scale, we give it the code number of 8 (5 plus 3). The complete color code number for that tube then is 458; 4 for the red, 5 for the green, and 8 for the blue.

Suppose in testing another tube, the red matches No. 2 in the gray scale, green No. 4 and the blue No. 6. In other words, the red is two steps darker than green, the blue two steps lighter than green. Again as before, in arriving at the color code number we give green a value of 5. Therefore, since the red is two steps darker than green, we give it a color code number of 3 (5 minus 2). Similarly, since the blue is two steps lighter than green, we give it a code number of 7 (5 plus 2). The complete color code number for that tube then is 357; 3 for red, 5 for green and 7 for blue.

Since in the code number, green, which is our baseline from which the red and blue are gauged plus or minus, always is represented by the number 5, the middle number can be eliminated from the code number, and only the first number (red) and third number (blue) need be used. In this way, the simplified code number for the tube in the first example is 48, for the second 37.

NOTE: The two test-pattern components — the color strips and the gray scale — used in this test have been most carefully designed to allow the normal eye to gauge color values in terms of gray scale. The gray scale itself is designed so that each step, when progressing from dark to light (from 1 to 6), represents twice the light of the preceding step. This relatively large difference in values must be kept in mind when matching each color against the gray scale and evaluating the color characteristics of one tube against another. Remember, a difference of only one or two steps (which means one or two numbers) means considerable in terms of light. The entire scale represents a variation of 32 to 1 in light.

Another method to arrive at the color number is by comparing signal pulses of the three colors with the staircase

formed by the graywedge on the oscilloscope.

13. MEASUREMENT OF SENSITIVITY (BEAM AND TARGET ADJUSTMENT). It is characteristic of the image orthicon that every setting of the target voltage requires a definite setting of the beam current for a given value of illumination. Therefore, whenever the target voltage is changed, the beam current has to be changed simultaneously.

Raising the target voltage, together with the beam current, increases the sensitivity and output of the tube up to a certain point. Beyond that point, sensitivity does not increase, but the noise level becomes objectionable and the resolution decreases. In order to find the best setting for beam and target for a low light level, we should proceed in the following manner:

a. Switch on the Analyzer and adjust for normal scanning height and width.

b. Check line voltage to the Analyzer when using very long camera cables!!

c. Observe the darkest part of the density wedge (which has the number 1).

d. Gradually close the iris on the 90 mm lens until the Number 1 wedge just disappears.

e. Increase the target voltage until the number 1 wedge reappears. Simultaneously, increase the beam current until none of the other target details appears reversed in polarity (like a photographic negative).

f. Close the diaphragm of the lens. Increase the target and beam very slowly. Hold the pattern a positive image. Do so until any further increase in target voltage will not further increase the sensitivity.

This is the best beam and target setting for working under poor lighting conditions. We have now established the sensitivity rating for the tube under test, because f:stop setting on the 90 mm lens under those conditions when number 1 wedge is just barely visible is the sensitivity code number of that particular orthicon tube. If the f:stop setting in this particular case is, for example, f:16, the sensitivity code is number 16.

14. SATURATION POINT. First check amplifier gain control to make certain no amplifier saturation is taking place. Then, without changing beam and target setting, we can measure the saturation point for purposes of tube classification.

To obtain the high light saturation point code number for the tube, open up the aperture of the 90mm lens slowly until the top step-like signal on the monitor oscilloscope pattern for No. 6 on the gray scale stops growing. The f: reading of the lens aperture at that point then is a measure of the tube's saturation point. If the stop is f:18, for example, the saturation point code number is 18.

15. CONTRAST RANGE. The complete calibration code number for any one tube is a three-figure combination of the color code number, the sensitivity code number, and the saturation point code number. In terms of the examples already given, the code number for that particular tube would be 48-16-18.

WHAT THE CODE NUMBER MEANS. By using the last two figures in this code number (sensitivity and saturation) it is possible to arrive at a figure for the contrast range of the tube. If these last two figures are the same, the tube has a contrast range of 1. If the second number (sensitivity) is twice as large as the third (saturation), the tube has a contrast range of ½. Similarly, if the second number is only half as large as the third, the tube has a contrast range of 2. To go back to the tube used in our example having a code number of 48-16-18, it has a contrast range of 18 divided by 16 or very nearly 1. A tube with a large contrast number will accommodate a low contrast scene. In other words, it exaggerates the scene brightness range and should not be used outdoors in bright sunshine. It would be very good outdoors in the rain or on a dull day.

Although a tube having a contrast

range of 1 is better for all-around use, that does not mean that a tube having a contrast range of ½ or 2 is useless. Quite the contrary, tubes with high or low contrast ranges can be used very effectively under certain conditions. A tube with a low contrast range, for instances, can do a good job under conditions of bright sunlight with light lights and dark darks that make the lighting contrast high. A tube with a high contrast range, in the same way, works well under conditions of flat lighting where high contrast is desired.

The complete code number makes it easy to select tubes whose characteristics match for use in multiple camera shows. Although the ideal would be to use tubes having exactly the same code numbers, tubes with slightly different characteristics can be used successfully. It is important, however, that all tubes used on any one show have the same color and contrast range numbers. If the sensitivity and saturation numbers are not the same, the difference can be compensated for by using different stop openings on the camera lenses. Let us suppose, for example, that we have two tubes — one with a code number of 48-16-16, and the other with a code number of 48-8-8. Both tubes have the same color code number of 48. Both have a contrast range of 1 (8/8 equals 1 and 16/16 equals 1). Yet the first has four times the sensitivity to light and four times the saturation point (f:8 passes four times as much light as f:16). To compensate for the difference, the second tube (48-8-8) must be used with a lens opened up two stops more than the lens used with the first.

16. HORIZONTAL CENTER RESOLUTION. Adjust beam and target again and adjust the orth and image focus for best resolution at an f: stop setting about half-way between the sensitivity setting and saturation setting. Then defocus with the orth knob until the dynode imperfections, known as dynode spots, disappears. Watch if the resolution changes considerably with the defocusing of the dynode spots.

NOTE: The resolution measured by the Video Analyzer is approximately 20% lower than measured with the RMA Chart because the Video Analyzer does not have the harsh contrast of the RMA Chart in the resolution-pattern.

17. VERTICAL CENTER RESOLUTION (INTERLACING) HOW TO MATCH CAMERAS. To check for interlace, observe the horizontal resolution pattern in the center. If the lines make odd twists and turns and the pattern is not crisp and clear cut, you have interlace trouble. Correct by readjusting the sync generator.

To check one camera against another to insure the use of matched cameras on a multi-camera show, mount a Video Analyzer on each camera and then switch from one camera to another on the master monitor. In this way, the image from each camera can be studied and compared on the one master monitor.

Control monitors then should be checked against the master monitor and adjusted to give comparable images. Likewise, the camera viewfinders should be checked against the master monitor and adjusted to give comparable images. With all monitors giving comparable images, cameramen, directors, and program managers will have a uniform basis for judging image quality.

18. PREDETERMINATION OF f: STOP. Since the proper f: stop setting of a camera depends on the saturation point of the orthicon tube and the illumination of the subject, all three figures — f: stop, saturation point and light level — have to be in a certain relation to each other. Since the saturation point of the tube is determined by the illumination of wedge No. 6, this saturation figure has a direct meaning as far as the f: stop is concerned. The only thing we need to know is the equivalent light reading of wedge No. 6, which has been used to determine the saturation point of the orthicon tube in use.

The light intensity of wedge No. 6 is

equivalent to approximately 20 footlamberts. That means, a 100% reflecting body illuminated with 20 footcandles would have the same brightness as wedge No. 6. To predetermine the f: stop setting for any particular scene, this figure will allow us to do it. The surest and fastest way to do this would be to use a footlambert meter. With a footlambert meter, the brightness of any point can be read in a few seconds and, since the saturation point of the tube is known, the f: stop setting can be done accordingly. For instance, we measure the brightness in footlamberts of the brightest subject on the scene (do not take high light reflectance such as jewelry, high lights in metals, etc. Rather take light dresses, shirts, etc.). If this brightness is, for example, 20 footlamberts, the f: stop setting has to be the same as the saturation code number, which is 18, on the previously mentioned orthicon tube — 48-16-18. If the brightness of the high light subject is 40 footlamberts, we would have to stop down to f:22. If the brightness were 80 footlamberts, we would have to stop down to f:28 or, if the lens cannot be closed down that far, we would have to reset beam and target for high light level condition.

Since 100% reflecting subjects are never used on a scene (100% reflecting subject are magnesium oxide, or magnesium carbonate), those footlambert figures are not identical with the footcandle reading. As an average, we can figure that ordinary white paper reflects approximately 70%; human skin reflects approximately 30%; an average stage setting reflects approximately 40% — of the incident light. Therefore, the footcandle reading will have to be between 1½ to 4 times as high as the desired footlambert reading, which has to be taken if a footlambert meter is not available.

Coming back to our previous example of tube 48-16-18 — at an aperture of f:18 the incident light reading in footcandles for a very light colored scene would have to be approximately 30 footcandles; for medium-shaded scenery approximately 50 footcandles; for a dark-shaded scene with predominantly dark subjects 80 footcandles.

Using a sensitive orthicon tube under very bright light conditions would require a smaller f: stop than available on standard lenses, and it is therefore desirable to cut the light transmission of the lens by using a filter in front of the lens. Yellow filters are preferable because they give a better brilliancy and cut through haze. (K2 or Aero No. 2).

By using your Video Analyzers regularly before each show, you not only can always be sure of matched and properly adjusted cameras, but you can keep tabs on the condition of each image orthicon in stock. The first time you check a new image orthicon, mark or paste the Analyzer code number on the tube. Then every time you align a camera from then on, check the color sensitivity, light sensitivity, saturation point, and contrast range of the image orthicon against the old code number. These comparisons of code numbers can tell you a great deal about the condition of the tube.

During natural constant use, every orthicon tube loses sensitivity gradually, so the contrast number gradually increases. When the contrast number reaches approximately twice its original value, the tube should be taken out of service and stored away for several weeks. During that resting period, it regains its original sensitivity almost completely, and it is essential to have a rest period until it recovers.

When the tubes get old, the reverse thing happens to the contrast number because the saturation number drops also. It drops with a greater rate than the sensitivity. For this reason, very long used tubes have a low sensitivity, a still lower saturation point, and therefore a very low contrast number. They can be used in bright light under high contrast conditions, like ball games in bright sunshine, where dark shaded areas and sunny areas are equally important in the same scene. Since there is enough light available, the dimin-

ished sensitivity has no effect on image quality.

There is another fact which limits the satsifactory use of an orthicon tube. All wide spaced tubes get noisy and lose resolution if they are used to long without giving them rest time to recover. So, if a tube does not show good resolution and at the same time has background noise, it has to be stored for several weeks. If this is not done, the tube will suffer and will be permanently impaired.

If, on the other hand, a tube in constant use decreases rapidly in contrast, which means that the contrast number goes down from day to day, that particular tube may have become gassy and should be sent to the manufacturer for reprocessing. This decrease in contrast occurs long before the tube develops an ion spot. Once it has developed an ion spot, it cannot be repaired any more. It is therefore important to watch the contrast number constantly. Further technical details of the television camera are included in section 8.9.

6.3 *Camera Operating Techniques*

The use of the camera is related directly to the interpretation of the lighting content of the scene to be telecast. Since lighting techniques either fall directly to or under the supervision of the technical department, the use of lights must be considered an integral part of camera operation.

Regardless of the number of ways lights are used to achieve certain effects (key, modelling, etc.), the operator may relegate them in a practical manner to two types; flood and spot. Camera technique is concerned basically with the brightness range to be encountered. Thus should it be discovered that the brightness range of an initial setup exceeds that allowable, he immediately deduces that it is necessary to use fewer spots and more floods. The producers and directors of the show will have their own ideas as to location of key lighting and relative intensity of general lighting at other portions of the scene. It is the job of the technical department to as nearly achieve the desired photographic effects as possible within the limitations of the technical equipment. The overall job is satisfactorily done only by intensive teamwork.

Due to the automatic and unconscious action of the human seeing mechanism, the human eye is a poor judge of brightness range. Since this characteristic is the ratio of the brightest highlight to the darkest shadow, even conventional light meters are severely limited in usefulness in television studios. While such meters may adequately measure the light-level of portions of a scene, reflectance properties of small objects are ignored by the average meter, and no correlation may be made between studio illumination and image orthicon interpretation of the smaller and important objects. Therefore special light meters are used in TV which measure reflected as well as incident light, and are color corrected to match the spectral sensitivity of image orthicon tubes.

One such meter, widely used at CBS-TV and gaining in popularity elsewhere, is illustrated in Fig. 6.3A. This is the SEI Exposure Photometer, made by Salford Electrical Instruments Ltd., of England, and distributed in this country by the Back Video Corporation. This meter measures the brightness of pinpoint areas on a subject from the camera lens position, with such sensitivity that readings are made from the deepest shadows as well as from the brightest highlights. In use, any portion of a subject — which may be only a few feet away or as much as 100 feet from the camera — whose illumination is to be measured, is viewed through the focusable telescopic eyepiece (Fig. 6.3A). A dark spot is seen superimposed on the scene. The user then turns a knurled ring on the base until the brilliance of the dot, which is illuminated by a calibrated battery-powered bulb, is adjusted to match the portion of the scene or subject being measured. When the dot blends in and

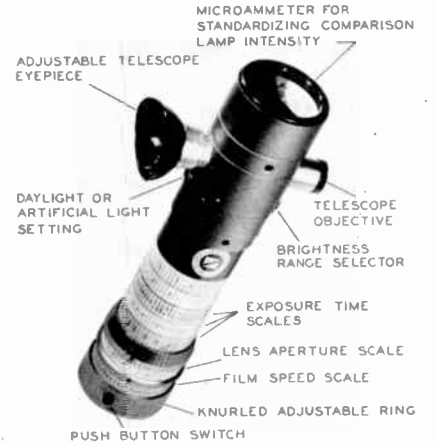

Figure 6.3A. SEI Exposure photometer used in TV studios. Courtesy Back Video Corp.

disappears, f: stop openings are read directly from the scales on the main barrel. Calibration, to compensate for battery and lamp wear, is included in the device. Light from a comparison lamp which illuminates the dot also illuminates a photo-electric cell connected to a microammeter mounted in the top of the photometer. Before the exposure readings, a rheostat control in the meter base is adjusted until the needle of the microammeter points to a central standard mark. Such calibration eleminates the possibility of errors caused by uncontrollable variables.

It is most convenient in practice to match the pickup tubes in the number of cameras to be used on one show, then match as nearly as possible the lighting of the scene to the cameras. Where a device such as the *video analyzer* (preceding section) is not used, it is advisable to use some form of color chart such as the Agfa Color Chart. The chart is a large board upon which is pasted colored strips of red, yellow, green and blue of a maximum saturation. Adjacent to each of these strips is a gray step wedge divided into a scale where 100 (in the presence of sunlight or "white fluorescent light"), designates the same *brightness* as the adjacent color. The other divisions then represent the relative percentage of reflectivity to the 100 mark. Since the operator is interested only in the relative response of the pickup tube, the use of the chart is practical under any kind of artificial illumination. The important point is to use some means of ascertaining "balance" between individual image orthicons, then to balance the lighting condition for a given scene to the cameras.

Let's return for a moment to the video analyzer information outlined in the preceding section. The No. 1 wedge on the analyzers gray scale, used to determine the tubes' sensitivity, transmits ⅔ footlamberts of light, and the No. 6 wedge, determining the saturation point of the photocathode, transmits 20 footlamberts. The contrast number of the tube is equal to the saturation number divided by the sensitivity number. Therefore if these numbers are the same, the contrast number is 1. Since contrast is the ratio of the brightest highlight to darkest dark in terms of reflected light, it is necessary that the brightest reflected light be no more than 30 times the darkest object to be adequately reproduced. The contrast number of 1 allows maximum contrast (30-1) to be used. The *brightness range* for any image orthicon is 30 divided by the square of the tubes' contrast number. Thus if the contrast number is 2, the brightness range for that tube would be 30/4 or about 8.

Therefore reflected light is measured preferably by a light meter such as the photometer described above, which gives results directly in footlamberts. If, then, the tube saturates at 20 footlamberts with a lens stop of f:8, and the light meter indicates a maximum highlight value of 40 footlamberts, the operator may correctly estimate that the iris must be stopped down one additional stop, or f:11.

It is imperative also to consider whether filters over the lens are necessary for the particular type of lighting and pickup tubes in use. With the newer types such as the 5820 and 5826, infra-red response is negligible, where-

as ultra-violet is still susceptible in the pickup response. Therefore, if a large amount of fluorescent lighting is used in ratio to incandescent lights, a minus-blue filter such as Wratten No. 5 must be used in an adaptor ring with the lens. Such filters cut the overall sensitivity about 50%, therefore influencing the intensity of illumination required, or the stop opening used.

In judging picture quality, "skin tones" serve as the best criterion. If skin tones are correct, other factors will usually fall within acceptable standards with only slight manipulation.

The basic movements and adjustments of the TV camera are illustrated in the sketches of Fig. 6.3B. In (1) it is noted that the panning handle is an integral part of the friction head upon which the camera mounts. This handle moves the head left or right for *pans* (3), or up and down for *tilt shots* (4). The friction head contains an adjustment for any desired amount of "drag" or friction applied for turning or tilting (section 2.7).

(2) of Fig. 6.3B shows the location of the turret control and optical focusing knob. The turret is rotated by squeezing the turret handle on the rear of the camera and turning it to place the desired lens in front of the image orthicon. The "taking" lens is on top of the turret after correct positioning. The optical focusing knob moves the entire image orthicon and yoke assembly on tracts behind the lens turret. Maximum movement is approximately 2 inches.

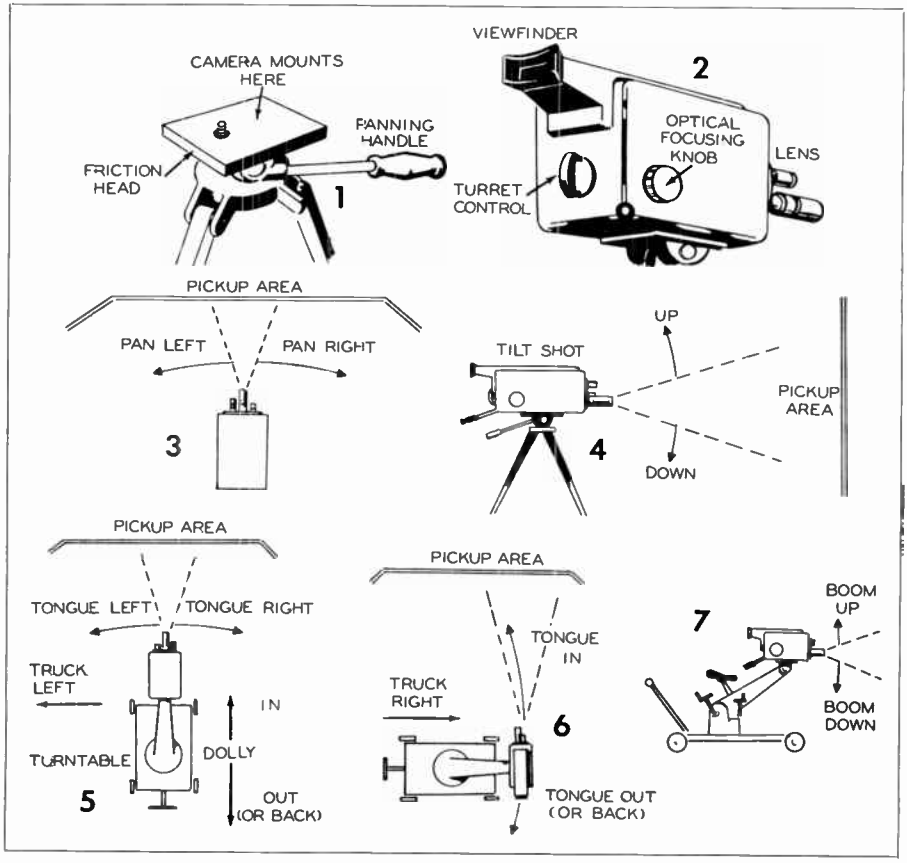

Figure 6.3B. Basic operational movements and adjustments of TV camera and mounting facilities.

(5), (6) and (7) show the basic movements as applied to the use of a mobile dolly or crane-mounted camera. These are the accepted terms which the operator will find in use in production technique, and should be thoroughly familiar to all operators. Panning or tilting of the camera on a crane or dolly is accomplished by the same type of panning handle shown in (1).

In addition to the optical focusing knob on the camera, the lens itself may be adjusted by means of a focusing collar as indicated in Fig. 6.3C. This collar is on the main barrel of each individual lens. In this way, the operator minimizes focusing adjustment necessary when changing from one lens to another. He may, for example, adjust his 90mm lens for focus at 10 feet on a title card, and his 135mm lens for focus at 25 feet. If the camera position is fixed throughout the show, a minimum of optical focus adjustment is required of the operator upon changing of the lens by operating the lens turret.

This figure also illustrates the iris gear box used on cameras which provide iris adjustment from the rear of the camera. Such pickup heads may be equipped with only two iris gear drives for two lens, or may be provided with all four. Such provision aids the camera operator immeasurably in meeting unexpected highlights in excess of the allowable brightness range.

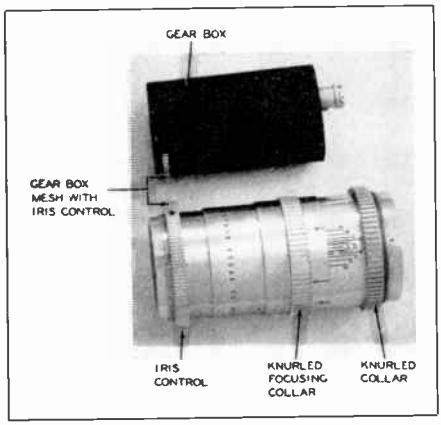

Figure 6.3C.

In camera operation as in any radio operation, all movements and adjustments must be so solidly a part of the program that the listener-viewer is left completely unconscious of the technical aspects involved. The less conspicuous the adjustments, the better is the technical operating technique. It has been said that the camera operator must be adept at mindreading. What is actually meant is that he must be thoroughly "production conscious."

The panning of a camera, for example, is probably the most used of actual operating technique. This movement must be integrated completely with the scenic action, and therefore must actually be *anticipated* by the operator. Although he is aided in this action by instructions from the technical director through his headphones, the actual operation must be eased into at exactly the split second of movement to be followed. In order to keep the person properly framed, the pan must *lead* the moving figure. In other words, the moving person must be kept in the same spot on the frame, except in very special cases which will be identified by the director. If his relative position changes, requiring the camera operator either to "catch-up" or "retreat" with his camera action, the bobble is noticed at once.

Similarly, the panning must be tapered off in exact accordance with the required movement. The "feel" of such operation is gained only through persistent practice. The operator should adjust the friction head drag to suit his individual touch on the camera movements. Sufficient drag must be used so that inadvertant movement will not "jiggle" the head with the consequent distracting jerk of the picture. If, however, the production calls for a "whip shot," requiring a rapid pan used only on special occasions, the drag must be light enough to allow rapid and smooth operation.

The tilt shot is self-explanatory and is used oftener (in a modified form) than the newcomer might suspect. If the reader observes closely the next "panel" show on the air, he may dis-

cover that the view is slightly "up" to the members of the panel. Producers use this technique to add dominance to the central interest of a scene, and lends a dramatic appeal not evident in "straight on" shots. Tilting of a camera during operation must, as a general rule, be done so slowly as to be just barely perceptible to the viewer.

The dolly shot is used for variety or dramatic interest. When the field of interest narrows to a portion of the total scene, the dolly or camera operator (depending upon type of dolly) is instructed to "dolly in." It is always ascertained beforehand that the dolly path is properly lined up so that uncalled-for weaving around obstacles is avoided. Unless sufficient lighting is used to allow a very small f: stop opening, the cameraman must anticipate his optical focusing so that no de-focusing is noticeable when the camera moves in. The same is true when the field of interest again broadens and the "dolly out" order is received. Needless to say, the dolly movement must be absolutely even and smooth both during the movement and upon starting or stopping the dolly action. A "follow" or "travel" shot is done by dolly movement. In this case, the dolly follows a walking person, or may travel along a showcase in which the sponsors wares are exhibited. Every camera movement must have a definite purpose, since a psychological effect is imparted to the audience for every movement or angle change. *The lens is the eye, the camera movement is the interpretation of the brain.*

The scanning area of the image orthicon tube is approximately equal to the size of 35mm film. Camera fans know that the "basic lens" for a 35mm camera is the 50mm size focal length (F) lens. The same is true of the TV camera using image orthicons. This size of F gives an approximation of the angle of view as observed by the human eye. A 35mm lens gives a "wide angle" of view which exaggerates the area possible to be covered, but results in much smaller images on the screen. The wide angle lens is used in such cases as opening shots to give an overall view of the total area to be covered in the immediate future, and increases the sense of distance over what the human eye would normally interpret.

Observe now Fig. 6.3D. The horizontal and vertical angles of the most popularly used studio lenses are listed in the table. The upper sketch, illustrating width of field (H angle) for the 35mm-135mm lenses, also shows the approximate width of field for each lens at 10 feet from the camera. At this distance, the 135mm lens, with an H angle of 13°, covers about 2.2 ft. The 90mm at 10 feet covers a field horizontally of about 3.3 ft. The 50mm lens at this distance includes a horizontal field of 6.4 ft. which is approximately equivalent to what the human eye interprets with clarity at a distance of 10 ft. The wide angle 35mm lens includes a horizontal field of 9.5 ft. at 10 feet away.

An excellent exercise for the new TV cameraman or student is to plot these angles on large size linear graph paper representing a scale equivalent to the working area of the studio to be used. The student may assume arbitrary dimensions such as 40 x 60 x 30 ft. By using the basic suggestions from Fig. 6.3D, a clear relationship may be observed between focal length of lens, position and height, and projected area that may be covered. After considerable practice, these factors become instinctively balanced in the every-day routine of camera operation.

Operational summary of lens size may be made as follows:

1. The smaller the F size, the greater the included angle of field, the smaller the image, and the greater the depth of field.

2. The larger the F size, the smaller the included angle of field, the larger the image, and the less the depth of field. The reader should review section 2.1 if these relative factors are not well visualized.

Depth of focus, the area which the given lens will cover with fine detail, is governed by size of lens (F), and the

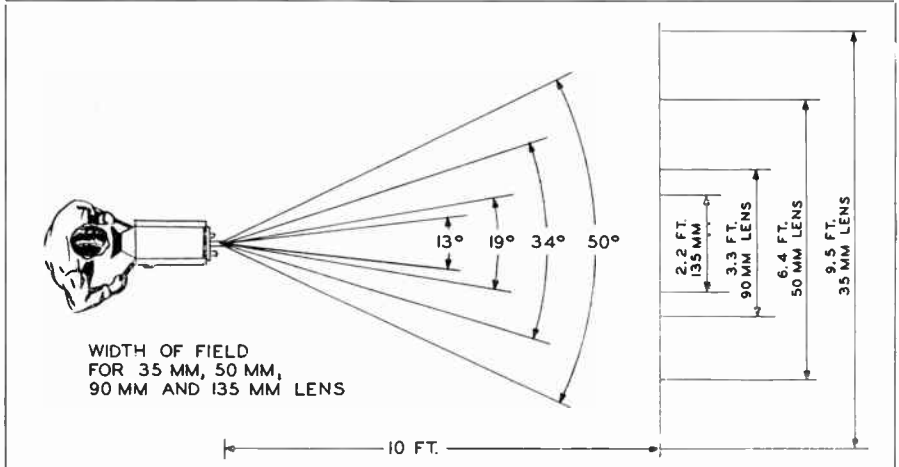

LENS	H ANGLE	V ANGLE
35 MM (1 1/2")	50°	38°
50 MM (2")	34°	25.5°
90 MM (3 1/2")	19°	14°
135 MM (5.3")	13°	10°
8 1/2"	8°	6°
13 1/2"	5°	3.7°
17"	4°	3°

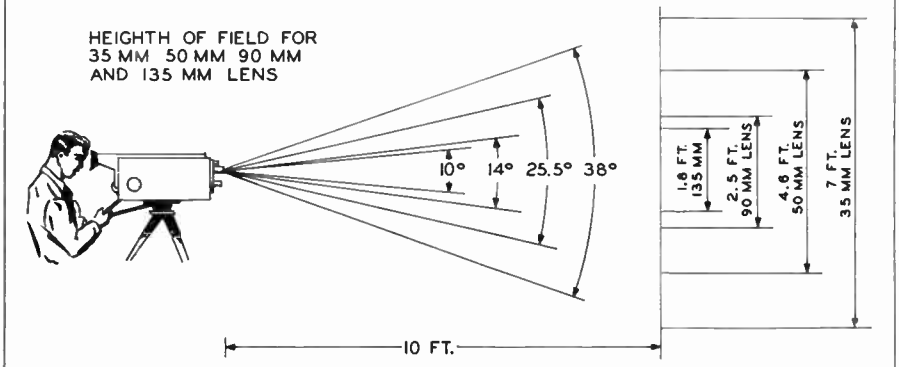

Figure 6.3D. Illustrating horizontal and vertical angles of TV camera lens when used with image orthicon pickup tubes. The width and height of fields shown at 10 feet are approximate, as estimated from graphical analysis.

iris stop opening (f: number); which, in turn, is governed by the amount and type of illumination, and scenic content which determines reflectance values and range of brightness. The reader should refer to the tables of depth of focus for various lens and f: numbers given in section 2.1. It is noted, for example, from Table 2.1L that the depth of field for a 50mm lens stopped to f:8 at 10 feet is about 12½ feet. All objects from 6'9" in front of the lens, to 19'3" away, will be sharply defined by the lens. (When the lens is focused on 10 feet.) A 90mm lens, which will have an included angle covering about one-half that of the above lens, when stopped to f:8 and focused at 10 feet, will have a depth of field of about 6 feet. (Table 2.1M.) In this way, the area of attention is narrowed, concentrating on a central point of interest, with larger

image size on the screen. Objects in the background, which were formerly included by use of the 50mm lens, are effectively "taken away" from the picture content. Depth of field also increases with distance from a given lens.

Fig. 6.3E illustrates the practical application of F size and distance in ratio to the area desired to be covered. In (1) is a sketch of the popular type of panel show involving 4 members of a panel plus one quiz master. The latter position often includes a place for a guest or participant on the show. We

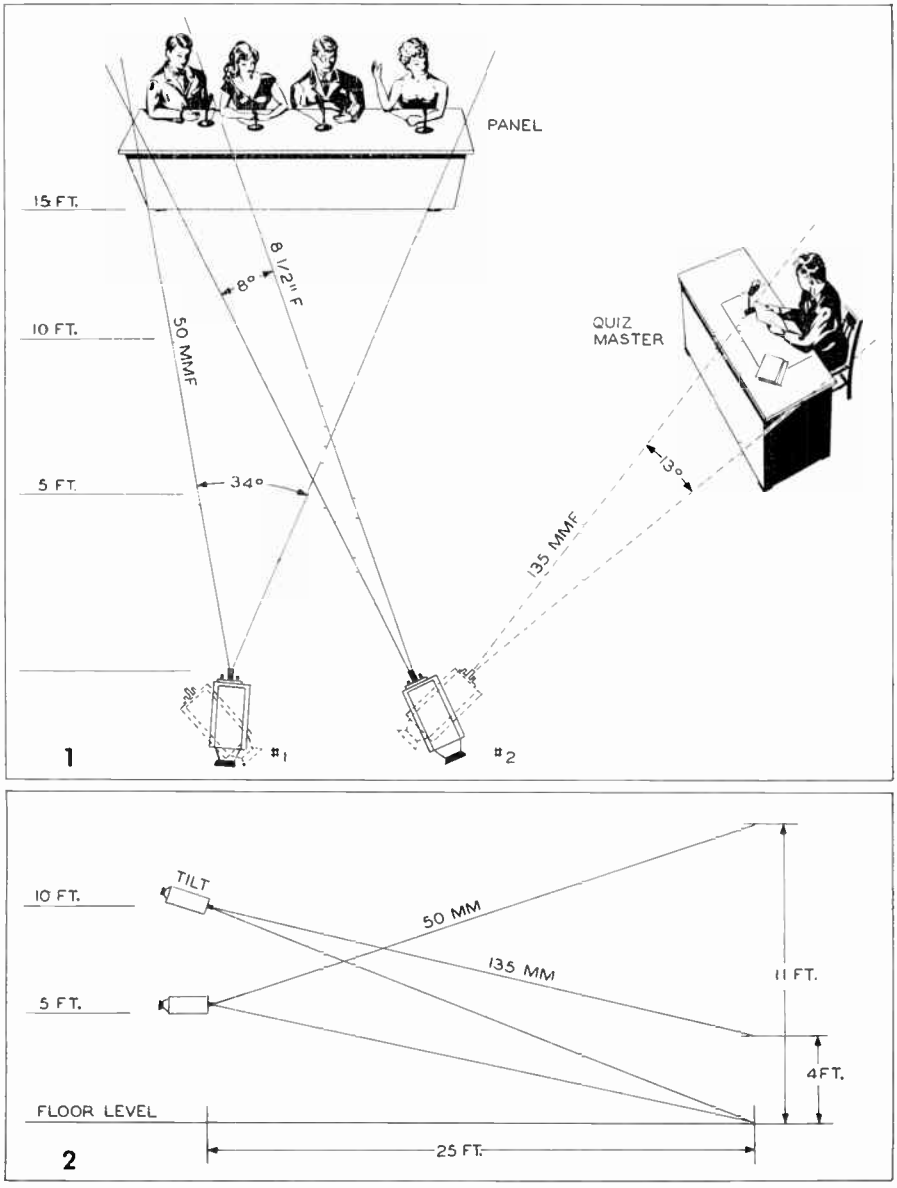

Figure 6.3E. (1) Panel show involving two cameras in pickup. (2) Vertical angles of the 50mm and 135mm lens.

have elected to illustrate how such a production may be handled with only two cameras, although three cameras are often used to increase latitude of production technique. The drawing shows the No. 1 camera trained upon the entire panel from 15 feet distance, with the 34° angle of a 50mm lens resulting in the proper horizontal coverage area. Camera No. 2 is shown trained upon one member of the panel with an 8½" lens, the 8° angle (horizontally) being just sufficient to cover one member. This, of course, fills the screen and results in a close-up of the face. Also shown in dotted lines is how the No. 2 camera may be panned to the right, lens turret rotated to use a 135-mm lens, whose 13° H angle covers a close-up of the quiz-master's face. Camera No. 1 may, of course, be panned in any direction, and any of the four lenses used to cover any portion desired. On a production of this type, judicious choice and operational technique of the 8 lenses involved eliminates need for camera movement, requiring only fixed tripods with pan heads. While one camera is on-air, the other camera operator receives instructions to ready his camera for the following shot, and the switching is made in the usual way in the control room. "Ready" and "ON-Air" lights on the front of the camera inform the participants as to which camera is in use at any instant.

It should be mentioned at this time that extremely small movements of an actor's head during closeups where little depth of field is required, are greatly exaggerated. For example, in the previous illustration, the 8½" lens at only 15 feet (approximately) has a very sharp angle of field. At very small angles through which the member may turn his face, the frame of the picture may be partly or wholly left with only the background. Usually, at this distance where such effect is noted, the 135mm lens is used, and the panel members spaced widely enough that this angle of 13° covers only one person. This points up the desperate need for plenty of rehearsal time on even the simplest of productions.

In (2) of Fig. 6.3E is illustrated the vertical angles of a 50mm and 135mm lens, on separate cameras at different heights and orientation. In this specific case, the camera with the 50mm lens is covering 11 feet vertically from the studio floor, at a distance of 25 feet. Another camera (on a boom or dolly of the pedestal type) is placed 10' high, and tilted so as to obtain a tilt shot covering 4 feet up from the floor. This is just one possibility of an infinite variety of combinations for various effects in the picture content.

Production terms which must be recognized by the TV cameraman are listed and defined as follows:

PAN. The cue will be "pan right" or "pan left." Some directors also include the tilt shot under the term pan, as: "pan up" or "pan down." If the term "HEAD ROOM" is given, the director wants more space above the person or object, and the cameraman tilts the camera up, or "pans up."

SINGLE SHOT. The director intends for the shot to include only one person.

TWO-SHOT. The director intends for the shot to include 2 persons.

GROUP-SHOT. The director intends for the shot to include a specified group of persons.

COVER SHOT. Also termed "Wide shot" or "long shot." The picture should cover the entire scene of action. This is most generally accomplished by the 50mm lens. If, however, the camera is necessarily close to the whole scene, the wide-angle 35mm lens must be used.

CLOSE-UP. Unless otherwise directed, the close-up should cover the head and shoulders of the specified person. For studios of the average TV dimensions, the 135mm lens is most usually used.

MEDIUM SHOT. Unless otherwise directed, the coverage should be from the waist up of the specified person.

This most usually requires the 90mm lens.

TIGHTEN SHOT. The director wants less space around the sides of the object, person or persons. The camera operator must either get closer to the subject or use a longer F lens.

LOOSEN SHOT. Opposite of above.

DOLLY-IN. Move the dolly or pedestal in toward the scene of action.

DOLLY-BACK. Opposite of above.

TONGUE RIGHT OR LEFT. Swinging the camera boom to right or left as in Fig. 6.3B(5).

TONGUE IN OR OUT. Illustrated in Fig. 6.3B(6). Note that this direction applies when the dolly or crane is crosswise to the pickup area.

BOOM UP OR DOWN. Illustrated in Fig. 6.3B(7). Results in vertical movement of camera which may be on-air, or may be done to ready the following shot.

When the camera operator receives instructions to "ready number 2 camera for tight-shot of singer," he should be able to achieve just that, with optimum transmission characteristics, and with the minimum elapsed time.

Typical problems relating to camera operation, and most likely solutions, may be summarized as follows:

1. BRIGHTNESS RANGE EXCESSIVE FOR PICKUP TUBES POSSIBLE TO USE. Several solutions are possible. (a) Increase ratio of floodlighting to keylighting, commonly termed *lower the key-lighting*. (b) Judicious change of props or costumes within reason. In some cases, this cannot be done and still maintain the mood of the show. It often occurs, however, that brightness range is exceeded only with such minor properties as jewel adornments, chrome stripping on objects, etc. (c) If brightness range is exceeded only during short portions of the total time, cameras may be prepared just before the transition to this portion by stopping down the iris. This feature is very practical with control of the lens iris from the rear of the camera. Some very recent equipment incorporates motor driven lens iris control from the control unit in the studio, allowing maximum flexibility in production technique. (d) As a last resort, the camera control-unit operator in the control room resets his target voltage and beam current. (Mentioned further in next section.)

2. INADEQUATE DEPTH OF FIELD. With the new ultra-sensitive image orthicon such as the type 5820, this problem need not often present itself. Sufficient light should be used so that iris controls may be stopped down to f:11 or f:16. Remember that the smaller the aperture, for a given focal length lens, the greater the depth of field. In some cases, however, it is desirable from a program mood standpoint to have background subjects deliberately "out-of-focus" so that they are not predominate to the central "focused" theme. In this case, the depth of field is seldom a problem unless a long focal length lens must be used at a fairly wide stop opening. Depth of focus is increased in the following ways: (a) Camera moved back. (b) Use of smaller f: stop number, usually requiring more light, (c) Use of lens with shorter focal length. This increases angle of view and decreases size of images on the screen.

3. DISTORTION OF FACE UPON MOVEMENT UNDER EXTREME CLOSE-UPS. This is caused by bringing the camera in too close to the person, using a lens such as 35mm or 50-mm, and attempting to get a full-size face view. When the person turns his face even slightly, the nose, for example, may become unduly enlarged since a wide angle lens tends to distort depth on close-up views. For such shots, the camera is kept back a reasonable distance, and a longer F lens, such as 90mm or 135mm is used for the close-up. In very large studios where the camera may be back 30 or 40 feet from the scene, a close-up calls for the 8½" lens, or even the 13½" lens. If the reader carriers out the recommended practice of plotting lens angles on lin-

ear graph paper as basically shown by Fig. 6.3D, he will gain a valued appreciation of size of camera lens for the job.

About the only "special effect" which the camera operator may be called upon to supply is the "blur-out." This operation is a deliberate de-focusing of the image being transmitted by turning the optical focusing knob on the camera. Such effect is sometimes used for transition of time or locale. Either the same cameraman, or another cameraman picking up a different portion of the scene, may then be called upon to "blur-in" the following picture by starting from a de-focused image and then "focusing up" the same optical control.

6.4 *Operating the Camera Control Unit*

The camera control-unit operator is generally referred to as the *video operator*. It is his function to continually monitor the picture and waveform screens on the control unit, and make any necessary adjustments during transmission of the camera signals. An experienced operator may handle several control units when necessary. The reader should be thoroughly familiar with section 3.4, 3.5, and 6.3.

The RCA studio type control unit is illustrated in section 3.4, and a sketch of the functional controls are shown by Fig. 6.4A. Fig. 6.4B illustrates a chain of General Electric camera control units as installed at station WRGB. The 3 units to the left are connected to three studio cameras, the next 2 units are connected to 2 cameras in the movie and slide projection room and the sixth unit shows the picture se-

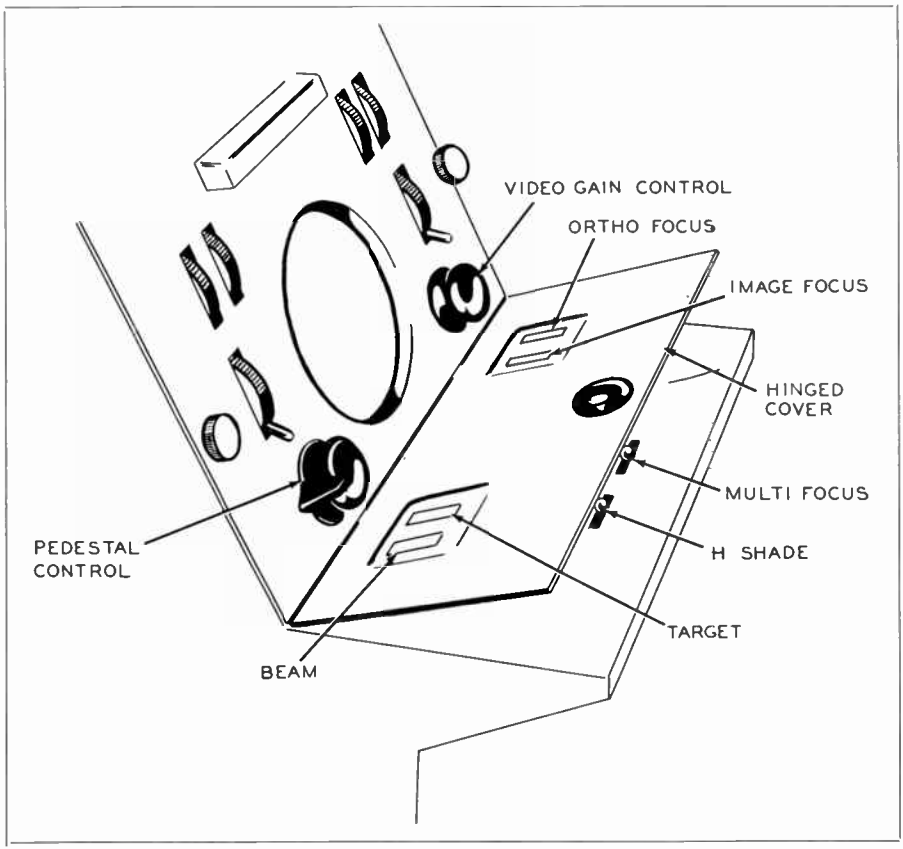

Figure 6.4A. Functional controls for video signal on RCA studio-type camera control unit.

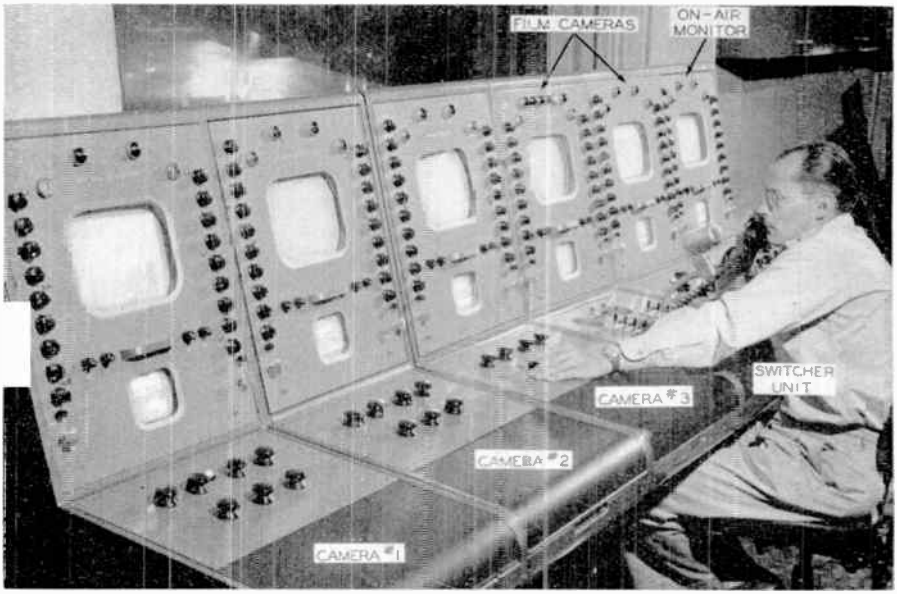

Figure 6.4B. Line-up of camera control units at TV station WRGB shown at top. The picture and waveform monitor controls are arranged vertically on each side of the monitor panels. The camera controls are on the desk of each monitor as shown below. Courtesy G. E.

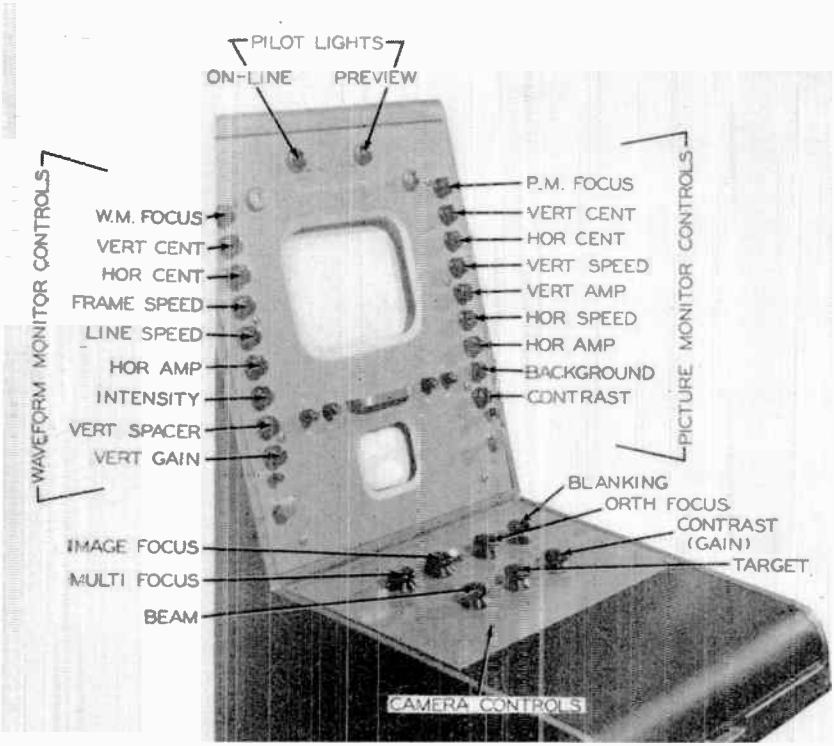

lected and actually being broadcast. It is noted that these particular waveform monitors display the line and frame waveforms simultaneously, a distinct characteristics of GE equipment. A dual waveform monitor is described in greater detail in section 6.7 concerning a movie projector camera control unit.

During a telecast, the video operator is responsible for the picture quality of each camera used in the pickup. Controls under his direct supervision determine the contrast and shading, amount of *setup* (section 3.5), image orthicon beam current, target potential, image focus, orthicon focus, blanking (pedestal) height, and video output level to the switcher and mixer unit. Although most of these controls are adjusted during the rehearsal set up, any or all such controls may need touching up during the telecast for optimum picture quality.

The two most used controls during an actual broadcast are the BEAM and TARGET knobs. Remember that upon appreciable change of lighting or scenic content, or upon a necessary camera lens iris adjustment, it may be necessary to reset the target voltage, since *target cut-off* depends upon the amount of light reaching the photocathode of the image orthicon. When the target voltage is changed, the beam current must again be re-adjusted to just discharge the highest highlights in the scene. When the highlights run away, or "bloom" on the picture monitor, it is better for the lens iris to be reduced. If, however, this is not momentarily feasible, the beam current must be slightly increased until this condition is remedied.

Fig. 6.4C(1) illustrates one possible appearance of a test pattern when target voltage is too low. The picture is noisy and "washed out." Fig. 6.4C(2) is the appearance with optimum adjustment for picture transmission. Fig. 6.4C(3) illustrates the picture when

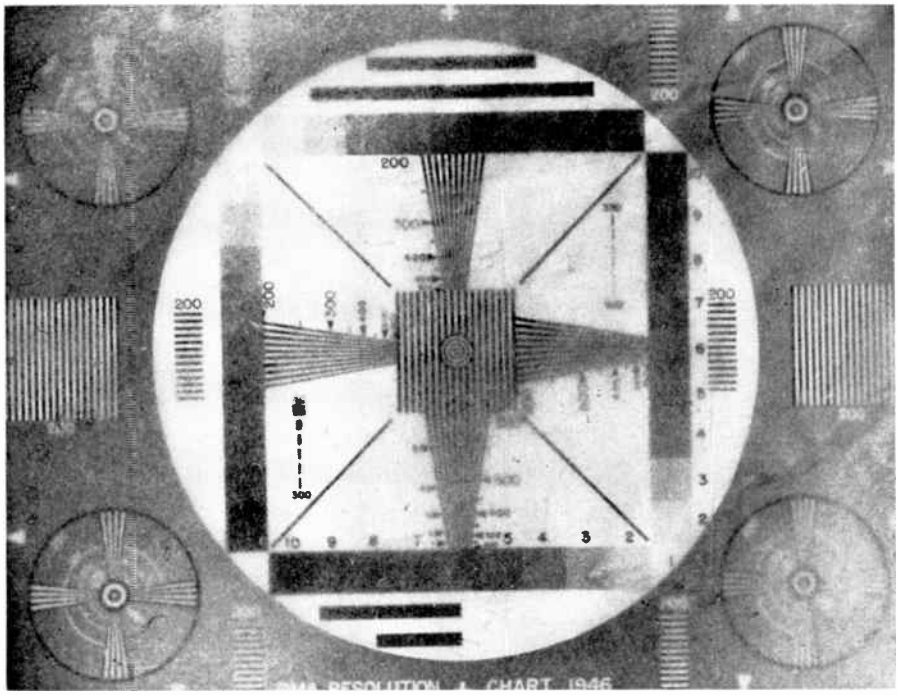

Figure 6.4C. (1) One possible appearance of test pattern when target potential is too low. Illustrates poor signal-to-noise ratio in picture.

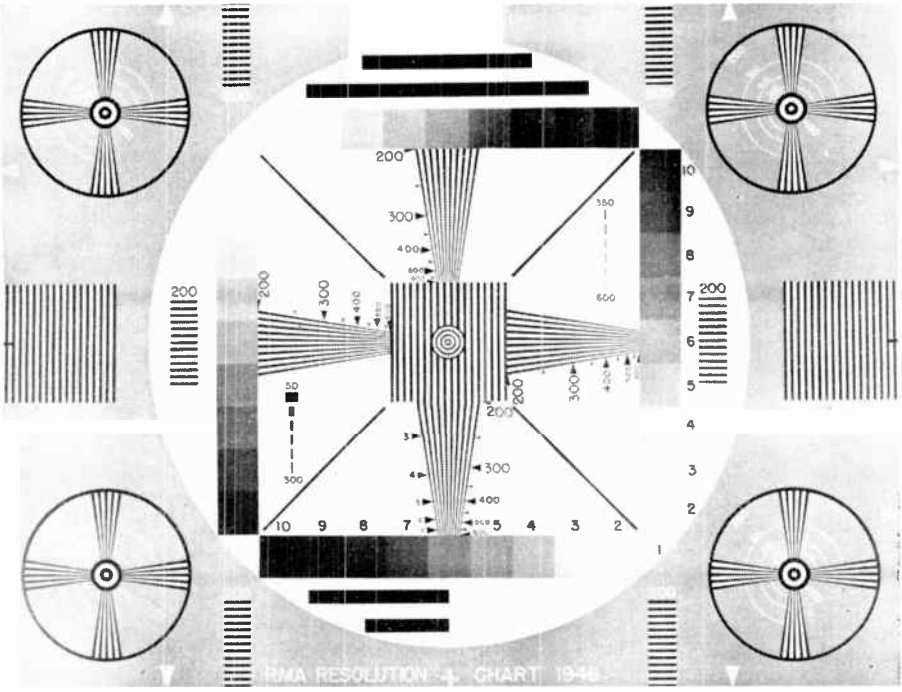

Figure 6.4C. (2) Appearance of test pattern in properly functioning transmission system.

shading is needed on the image orthicon tube, providing the test pattern is evenly illuminated. In this case the picture is progressively darker toward the left of the picture. The accompanying line waveform on the monitor scope would be slanted downward from right-to-left toward the "black" level. The H Saw (SHADING) control on the studio-type camera control unit is then adjusted so that the waveform becomes parallel to the lines across the monitor scope, at which time the picture should become as in Fig. 6.4C(2).

The *pedestal* or *blanking* level, amount of *setup*, and overall output level are very important in modern video operating technique. The operator usually has his waveform oscilloscope switch thrown to the "LINE WAVE-FORM" position so that these characteristics may be continually observed. (For single pattern scopes.)

Fig. 6.4D shows pictures of typical line waveforms on a camera control unit oscilloscope. In this case, sync is not inserted at this point, as is always the case where multiple cameras are used requiring switching in the following mixer unit. Blanking, however, is always inserted at the camera control unit position. The proper waveform is shown in (1), indicating an approximate *setup* of 10%, and an overall video amplitude (blanking level to reference white) of 1 volt. This is in accordance with the newest standards of actual operating practice gradually being adopted by TV stations. The composite level (with sync added) is then 1 volt of video, and 0.4 volt sync, for an overall output level from the studio output amplifier of 1.4 volts (section 3.5). The usual deflection on a 5" waveform tube is such that a 2" pattern on the camera control unit scope indicates a value of 1 volt of signal. The "Calibrate" control switch on the unit, when thrown to this position, should place a pulse of 1 volt amplitude on the screen for proper calibration. Some of the older units are still set for 2 volts calibration, and

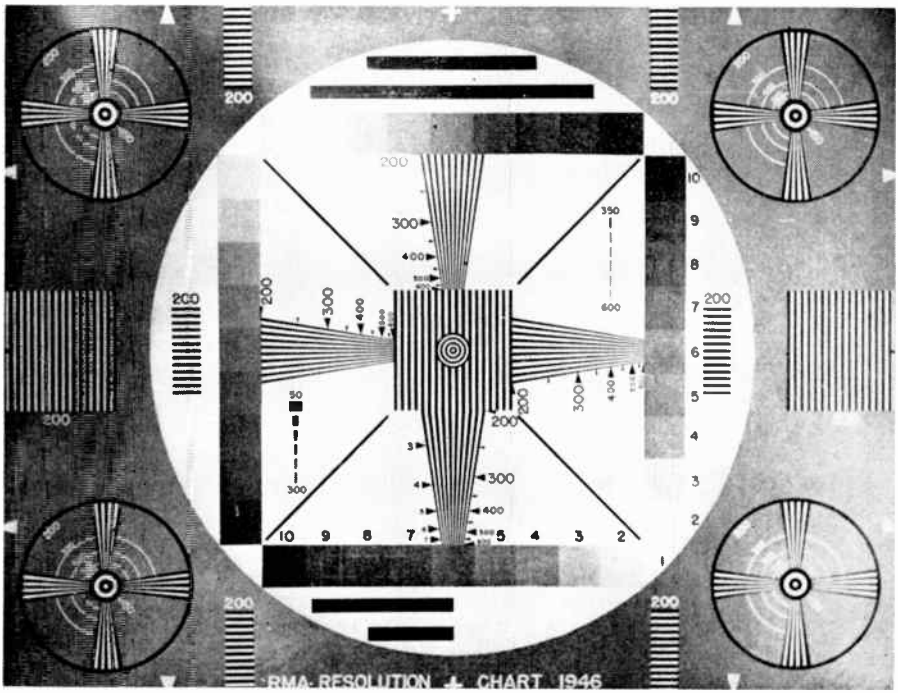

Figure 6.4C. (3) Appearance of test pattern when shading is needed. In this instance, the picture is progressively darker to the left, and the accompanying line waveform would slant toward the black level to the left of the waveform monitor.

the operator must, of course, follow the practice of his particular station in this respect.

In (2) of Fig. 6.4D is the appearance of line waveform when "overshoot" is apparent in the signal. There is some discrepancy in opinion as to how much overshoot is allowable, and as to the required sensitivity of the scope for properly monitoring the signal in relation to video levels. The wider the bandwidth response of the associated scope amplifiers, the more is the apparent overshoot for a given signal. Some engineers recommend that the bandwidth of the monitoring scope be reduced with a gradual "roll-off" at the upper end of the band. A regular wideband scope would then be used to monitor quality of picture content, with the restricted bandwidth being used to measure level only. This problem arises from the fact that some operators regard the apparent overshoots to be an integral part of the video signal and adjust the output level accordingly, while others ignore the overshoot presence in level adjustments. Since nationwide networking of programs will eventually emphasize the importance of some standard in level measurement, the problem is highly important. It seems to the author that definite standards should be established only after exhaustive research as to allowable level of overshoot magnitudes for optimum picture quality, since it is known that severe overshoots in the white region (resulting in cutoff of transmitter carrier) is not compatible with optimum operation of intercarrier type receivers.

The value of *setup* also varies between stations, but the 10% value is rapidly being recognized as advantageous over the original recommended value of 5%. New scales designed to be used with the waveform scope em-

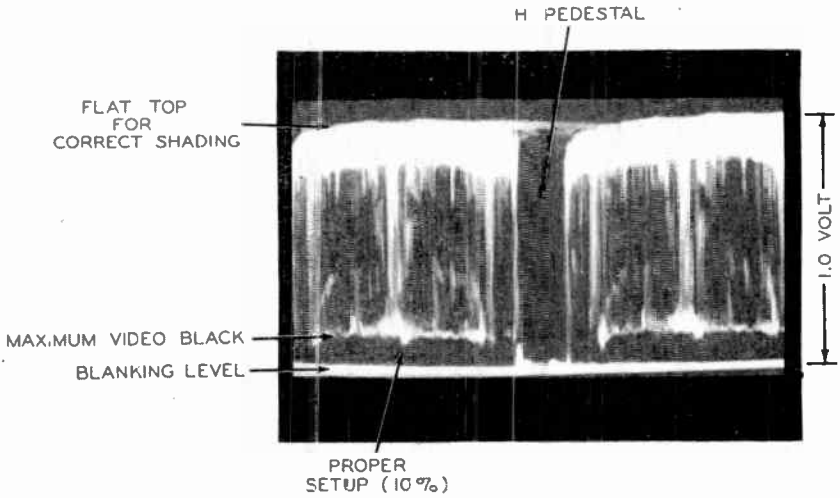

Figure 6.4D. (1) Oscillograph waveform on camera control unit set to monitor line-waveform, showing proper setup, shading, and 1 volt video output level. (Camera control unit waveform monitor is connected to output of monoscope camera in this case.)

phasize the importance of this value by showing a continuous line across the face at this level (section 3.5). Thus a certain amount of black overshoots may be present without reaching into the sync region, allowing an adjustment of the receiver background control so that retrace lines are positively blanked out, without clipping picture blacks that causes black compression with deterioration of the gray scale in picture content.

The video operator should assure that setup is maintained constant at all times, otherwise the brightness level at the receiver would require constant attention. He should note this value during successive scenes of any one program, and, obviously, upon successive programs. Setup is determined by the ratio of video gain to blanking gain control for any given scene. As a general rule, however, the pedestal height may be set at the proper value which will not change upon adjustment of the video gain control. This is true because clamping occurs during pickup tube blanking (section 3.4), and the PEDESTAL control thus determines the clipping level at a voltage fixed in relation to *reference black* (section 3.5). If, then, the video gain is such that maximum *picture black* is less than this value, setup is established. Should pedestal height change radically with video gain adjustment, the maintenance department checks for trouble in the clamping circuits.

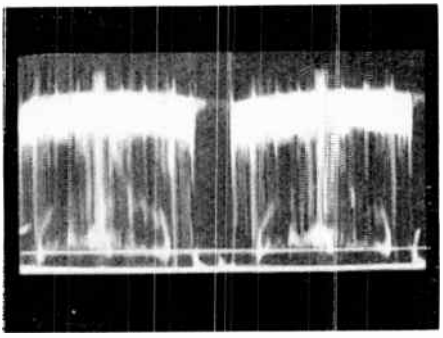

Figure 6.4D. (2) Monoscope camera waveform as in (1), except with large overshoots, particularly in the white direction.

Waveforms such as appear in Fig. 6.4D were analyzed in section 3.5. In a fairly wide-band oscilloscope, the "grass" in the white region is usually heavier as shown since most of the picture content is in this region. Also shown is the method of adjusting for optimum picture shading. The picture

content of these particular waveforms is that of a test pattern, and the MULTI FOCUS and SHADING controls are adjusted so that the waveform "grass" tops are approximately parallel to the reference lines on the screen, as outlined in the preceding section.

6.5 *Mixing and Switching Techniques*

The mixer-switcher unit selects the pre-viewed signal desired to be telecast, and feeds this signal to the following stabilizing amplifier where sync is inserted to form the composite signal. This unit is presided over by the technical director (abbreviated TD), by a *switching operator*, or in some cases by the producer of the show. The title of this operator varies with the station, but is usually referred to as the TD.

Fig. 6.5A is a drawing of a typical mixer-switcher control panel, such as described in section 3.6. Only the most normally used controls are shown. The two banks of pushbuttons are interlocked so that only one button in each bank may be depressed at one time, and cannot be duplicated on the other bank. Lever type fader controls are shown on the right, one for each bank of pushbuttons. It should be observed that FADE IN position for pushbutton bank No. 1 is "up," while FADE IN position for bank No. 2 is "down." Suppose, for example, that Camera 1 pushbutton on bank 1 is depressed, as is Camera 2 on bank No. 2, and that camera 1 is on-air. This means that both fader levers are in the "up" position, since this is the "in" position for camera 1 on bank 1, and "out" position for camera 2 on bank 2. The fact that Camera 2 on bank 2 is depressed indicates that the unit is readied to *dissolve* from camera 1 to camera 2. If a direct "cut" was to be made from camera 1 to camera 2, all that would be necessary would be to depress Camera 2 pushbutton on bank 1, which would then cut to camera 2. Thus when the producer-director orders the actual dissolve to be made, the TD simply brings both lever controls "down" simultaneously. This fades camera 2 signal "in" while camera 1 signal is faded "out" at the same rate, and both pictures occupy the screen for a brief moment during the dissolve. This function is sometimes termed *lap-dissolve* since it produces a momentary "lap over" of picture content.

Several possibilities exist with such an arrangement, all of which are used in practice. Suppose for example that the producer wants one signal faded to black completely, then a gradual fade-in of another signal. This may be done in one of two ways. Camera 1 on bank 1 may be depressed with the signal on-air, thus bank 1 fader will be up. Fade-out is done as above by operating the bank 1 lever "down." When the screen

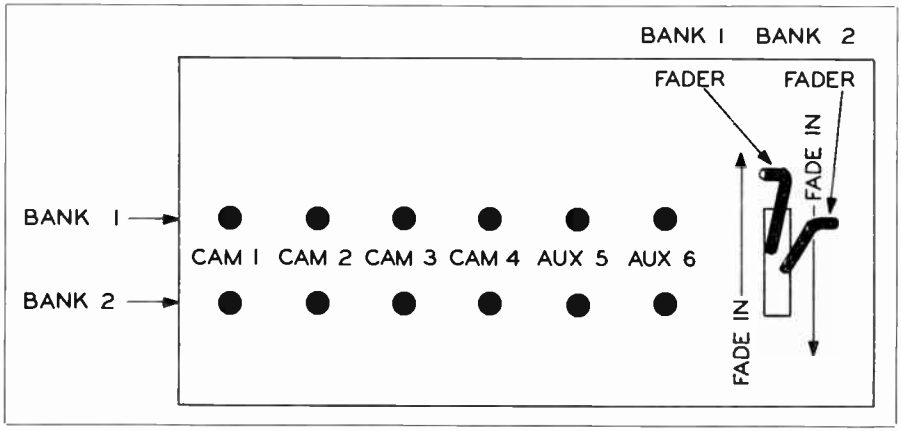

Figure 6.5A. Typical mixer-switcher control panel showing basic operational controls.

is completely black, Camera 2 pushbutton on bank 1 may now be depressed, which automatically releases Camera 1 pushbutton. The fader control for bank 1 may now be operated "up," fading in the signal from camera 2. The other method would be to have the on-air signal of Camera 1 on bank 1 faded out as above, while Camera 2 pushbutton on bank 2 is depressed with its respective fader in the "out" or "up" position. At the end of the fade out on camera 1, bank 1 fader lever will be down, and bank 2 fader lever will be up. Thus neither signal is transmitted, and the screen is dark. Operating the fader lever for bank 2 "down" now fades in the signal of camera 2.

The TD may not have the choice of method, even though either technique accomplishes the same thing. The choice may lie with the producer. The reason for this is that when a camera pushbutton is depressed, the "on-air" pilot light on the front of the studio camera is on, indicating to the performers that camera is in use, and their "play" may be directed to that camera. Thus in the first method described above, camera 1 on-air light goes out at the same time that camera 2 pilot light goes on. If the mood of the production is such that the talent should "play" toward the on-air camera, this method shows immediately the switch in orientation to be made. If no such relationship of actor-to-camera exists, the second method may be used. It is obvious, of course, that the Camera 1 pushbutton could be released by means of the "release key" for that bank (section 3.6) when the screen had been faded to black. Actually there is no particular advantage of either method over the other, and is mentioned here only to illustrate operational functions of the switcher control panel.

Superimposures are readily accomplished with the mixer unit. Actually we have already discussed one form of "super" in considering the lap-dissolve. The super is accomplished by depressing the desired pushbuttons, one in each bank, and adjusting their relative brightness by the respective fader controls. The operator must keep in mind that "up" is maximum brightness for bank 1, and "down" is maximum brightness for bank 2. When the picture backgrounds are carefully arranged on rehearsal, very satisfactory superimposures may be accomplished. One camera, for example, may use a wide-angle lens looking at a number of men who would be tiny compared to the close-up image of a man from another camera, resulting in lillipution figures crawling all over the shoulders of the close-up image. Such effects must be extra-carefully rehearsed before air time.

The switcher unit is also used to select remote or network program originations. In such cases, local sync is normally removed, since the incoming signals contain the composite waveform including sync. Should the sync signals fail or become inadequate for control, the sync-interlock relay is automatically energized, adding local sync to the following stabilizing amplifier as is done on studio shows.

The TD, or operator of the switcher-mixer unit must be thoroughly familiar with production cues as applied to his operational position. The usual terms and their definitions are as follows:

(1) READY TO FADE. This is a standby cue to the TD to expect the direct cue to fade out the signal now on-the-air. It is an alert order only, given to "ready" the operator for the action.

(2) FADE OUT. This is the direct cue for TD action. He operates the respective fader to slowly fade the screen to black. Other terms used by some producers are: Fade-down, Fade to black, Go to black, Dissolve to black.

(3) READY TO FADE IN ONE (or two or three, etc.). This is a standby cue to TD to be alert for the direct cue to fade in a specified camera.

(4) FADE IN ONE (or two, or three, etc.). The direct cue for the TD to adjust the respective fader from out to in, bringing the picture up in brightness from a black level.

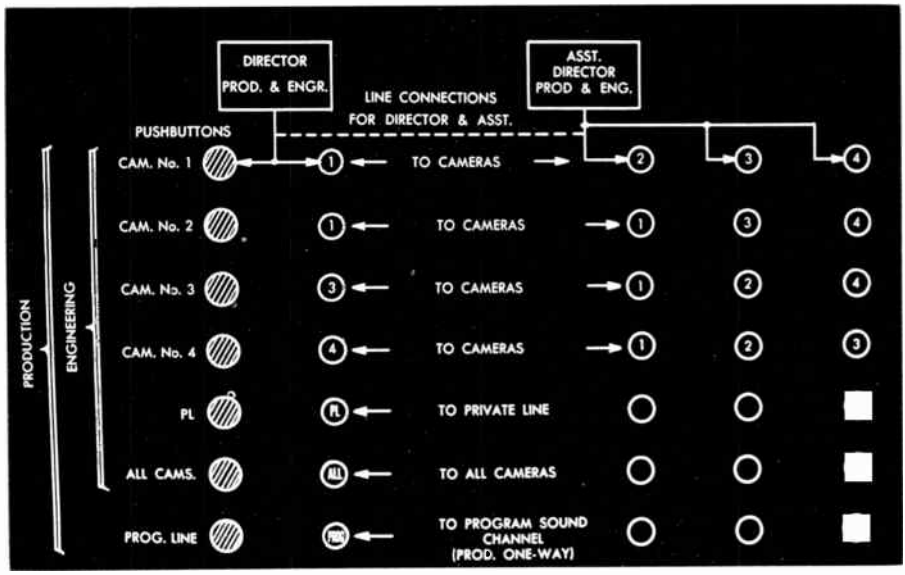

Figure 6.5B. Courtesy RCA.

(5) READY ONE (or two, or three, etc.). A standby cue to alert both cameraman and TD that the direct cue to take camera one is anticipated.

(6) TAKE ONE (or two, etc.). Direct cue to TD to cut to that camera. This is an instantaneous switch.

(7) READY TO DISSOLVE TO ONE (or two, etc.). Alert cue to TD that direct cue to dissolve is anticipated.

(8) DISSOLVE TO ONE (or two, etc.). Direct cue to TD to operate the faders simultaneously, with the camera push button to which the dissolve is to be made depressed on the other bank.

(9) READY TO SUPER ONE (or two, etc.). Alert cue for TD to anticipate direct cue to superimpose the designated signal over the one now on-the-air.

(10) SUPER ONE (or two, etc.). Direct cue for TD to add the designated signal to the on-air signal. This may be done gradually or "cut in" by depressing the super camera pushbutton with its respective fader already opened to the required brightness.

(11) LOSE ONE (or two, etc.). Direct cue to TD to remove the superimposition. This cue may also be: Take out one or take out super, or go through to two, etc.

The very important intercom system is usually associated with the TD position. Communication must be maintained both during rehearsals and on-air broadcasts between the TD, the producer, program director, cameramen, camera control operators, mike boom operator, and any assistant production men near the cameras or mike booms in the studio. An illustration of a typical intercom switching control box, along with its associated simplified schematic is shown in Fig. 6.5B.

To meet the requirements of the intercom and monitoring system, each operator is provided with a double earphone headset and microphone. The headsets are provided with dual plugs which provide a five-wire connection. This allows one earphone to reproduce the program sound, while the other reproduces the orders and cues given over the intercom network. Cameramen, and production men in the studio plug their units into jacks provided at the cameras, while mike boom operators plug them into jacks on the boom. Dolly operators also wear headphones. Operators in the control room plug their headsets into jacks usually provided on the switcher unit.

The intercom control box shown in the figure allows the TD and production director to talk directly with their respective engineering and production personnel, for the purpose of coordinating all aspects of the TV program. One bank of pushbuttons is for engineering, and one is for production. The TD, for example, can communicate directly with any of his cameramen by pressing the desired "CAM" (camera) pushbutton on the Engineering bank. He may also converse with all engineering personnel simultaneously by pressing the "ALL CAM" pushbutton. The button "PL" connects to a private line which may run to the studio or any other designated point.

By means of the "Production" bank, the producer-director can communicate with all assistant production men. He may also talk one-way to all production and engineering personnel simultaneously by pressing the "PROG LINE" (program line) pushbutton. This connects his microphone into the line which supplies program sound to all personnel.

Film chain operators in the film room are cued on loudspeakers by the same intercom system. Some TD's and producers commonly use the program line for nearly all instructions, as this gives all personnel an overall view of action and anticipated action.

6.6 *Using the Stabilizing Amplifier*

The mixer-switcher unit ordinarily feeds a stabilizing amplifier, where the composite sync signal from the sync generator is inserted, and then fed to the studio output line. The stabilizing amplifier is also usually found as the

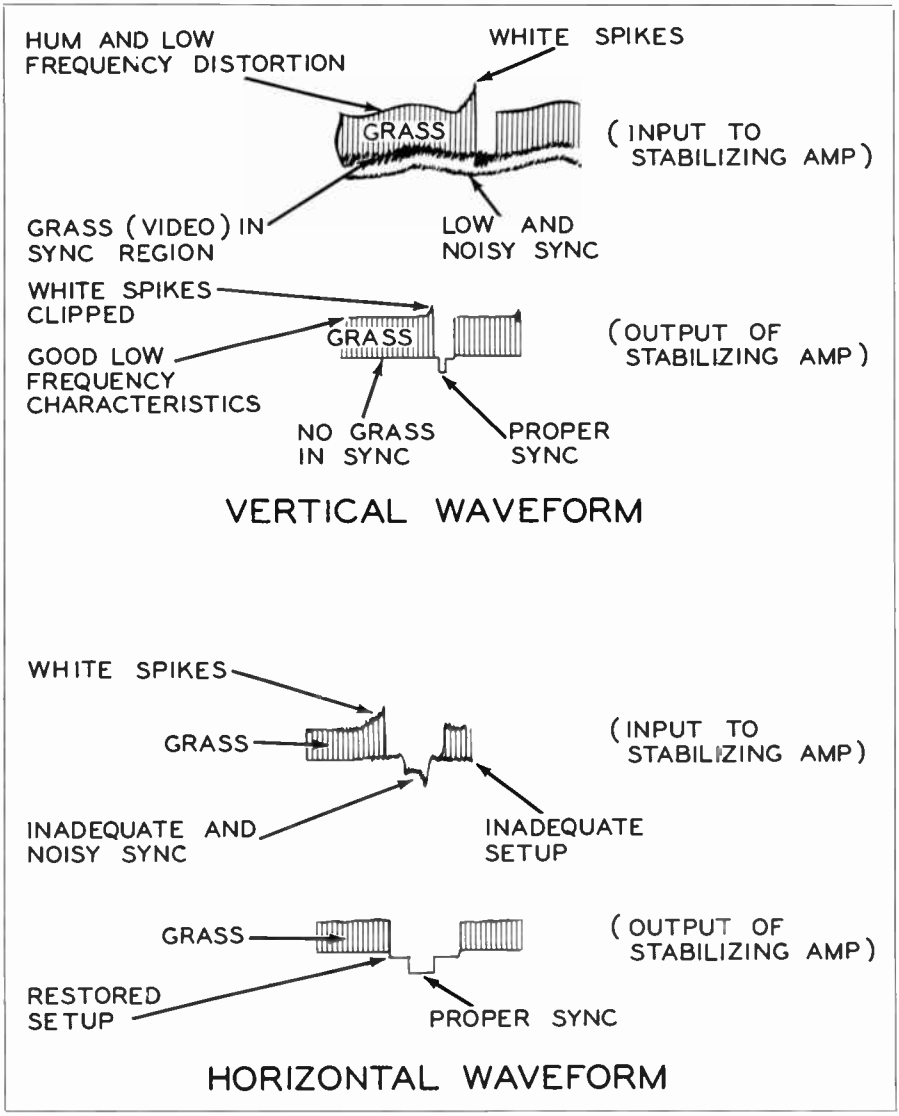

Figure 6.6A. Action of o properly functioning stobilizing amplifier upon opplication of faulty waveforms.

incoming network or remote line amplifier, in the master control output (when a master control room is used), and at the transmitter input position (Section 3.7).

When used as the termination for the switcher-mixer unit and studio line output amplifier, its functioning includes: correction of any fault in the video signals such as presence of hum or low frequency distortion or unwanted spikes and noise in the "white" region; insertion of the composite sync signals into the video and blanking signals from the switcher unit; and to provide proper output level of the composite signal with correct sync-to-signal amplitude ratio.

When used as an amplifier where sync is already inserted, such as on

the incoming network or remote lines, or at the line input to the transmitter room, its function includes: correction of any video signal fault as above, separation of sync for separate amplification and clipping to obtain noise-free sync at proper amplitude, to restore proper amount of setup, and provide amplification to step up the weak input signal voltage. Fig. 6.6A illustrates the action of a stabilizing amplifier when a faulty composite signal is applied to the input terminals.

All stabilizing amplifiers do not have a provision to affect setup, but all other features are normally included regardless of model. The General Electric TV-16-B, illustrated in Fig. 6.6B, includes the setup adjustment. This is accomplished by clipping the sync nearer to reference black level rather than at blanking level, amplifying the separated sync signals, clipping at the proper amplitude, and re-inserting the sync so that setup percentage is properly adjusted.

The panel controls shown in Fig. 6.6B have the following functions:

INPUT GAIN CONTROL: Used to control the gain of the *incoming* picture signal.

OUTPUT LEVEL CONTROL: Used to control the *outgoing* picture level.

INPUT SIGNAL SYNC SELECTOR SWITCH: This is a three-position switch (1) NOISE, (2) NORMAL, and (3) LOW SYNC, which selects the gain and frequency response of the sync-separator circuit to accommodate different classes of input signals.

SYNC SEPARATOR CONTROL: Sync pulse noise suppression control.

WHITE CLIP CONTROL: This is used to limit white spikes that would otherwise project in the region beyond reference white.

SYNC HEIGHT CONTROL: Used to adjust amplitude of the sync pulse.

BLACK CLIP CONTROL: Used to adjust the reference black level.

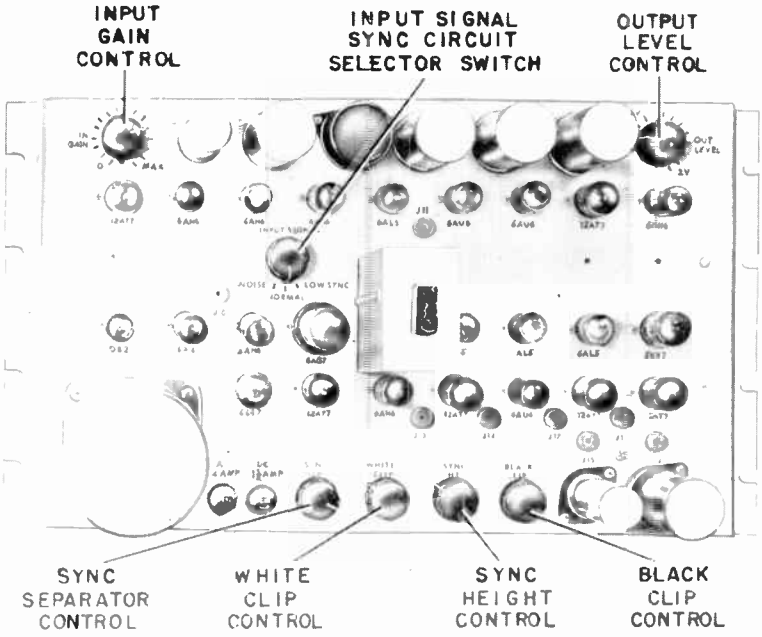

Figure 6.6B. Broadcast television stabilizing amplifier Type TV-16-B. Courtesy G. E.

In addition to these controls, the practicing operator may find a number of "remote controls," located at some convenient operating point, which perform the following functions:

GAIN: Used to adjust the *input* picture signal level after the panel control INPUT GAIN CONTROL has been set at a predetermined value.

CLIP FADE: Used to fade signal to black without losing the sync signal at the picture output.

SYNC HEIGHT: This may be a remote control in which case the sync height control on the panel is bypassed and does not function.

BLACK CLIP: This may also be a remote control, in which case the black clip control on the panel is bypassed and does not function.

LOCAL-REMOTE-SYNC: Controls the operation of a relay in the amplifier which selects sync either from the picture signal, or sync and blanking from the studio sync generator.

The complete block diagram of this stabilizing amplifier is shown in Fig. 6.6C, and should be observed during the following discussion of operating technique:

(1) OPERATION WITH A COMPOSITE SIGNAL. This means that the video plus sync is present at the input terminals, such as off the network or remote-relay lines. Under the worst conditions to be assumed, hum is present with poor low-frequency response, the sync percentage is incorrect (sync should be at least 10% to be usable even with a good stabilizing amplifier), or the picture signal is not of the proper relative amplitude. (Setup.)

It should be noted that in this case, local sync input is not required, as the incoming signal is composite. The first step is observation of the vertical and horizontal waveforms to ascertain necessary adjustments. The operator connects an oscilloscope (preferably with a calibrated screen) to the PICT. OUT (picture output) jack J7 (on rear of amplifier), or MON OUT (monitor output) jack J6 (also on rear of amplifier), or J12 which is on the front panel shown in Fig. 6.6B. The latter jack is simply parallel to the rear connection from the front panel. The normal sequence of operations in initial set up for a given signal is as follows:

A. Turn the INPUT SIGNAL SELECTOR SWITCH to the NORMAL position.
B. Turn the OUTPUT LEVEL CONTROL to the 1 volt position which is marked on the panel.
C. Turn the WHITE CLIP, BLACK CLIP, and SYNC SEPARATOR controls full on, or clockwise.
D. Turn SYNC HEIGHT control full off, or counterclockwise.
E. Set INPUT GAIN control for 1 volt video as measured on the calibrated screen of the scope at the picture output jack. In this measurement, the operator ignors the sync pulse or white spikes, adjusting for 1 volt of actual video content.
F. The BLACK CLIP control, which has been set full on, is now turned counter-clockwise until the sync pulse just disappears or until the blanking pedestal is free of notches, grass, or other distortions.
G. The operator may now use the WHITE CLIP control to remove any white spikes which may be present (Fig. 6.6A). In the absence of white spikes the control is set so that the whitest part of the picture is barely clipped, then the control is backed off slightly. It is assumed here that the picture signal contains that amount of white picture that will be prevalent during the broadcast.
H. THE SYNC HEIGHT control is now adjusted to obtain proper sync percentage.
I. Adjust the OUTPUT LEVEL control to give the required level. The maximum level at the picture output for this amplifier should not exceed 1.4 volts including sync if 1 to 1 monitoring is used, and should not exceed 2½ volts if 2/5 to 1 monitoring is used. This means that for

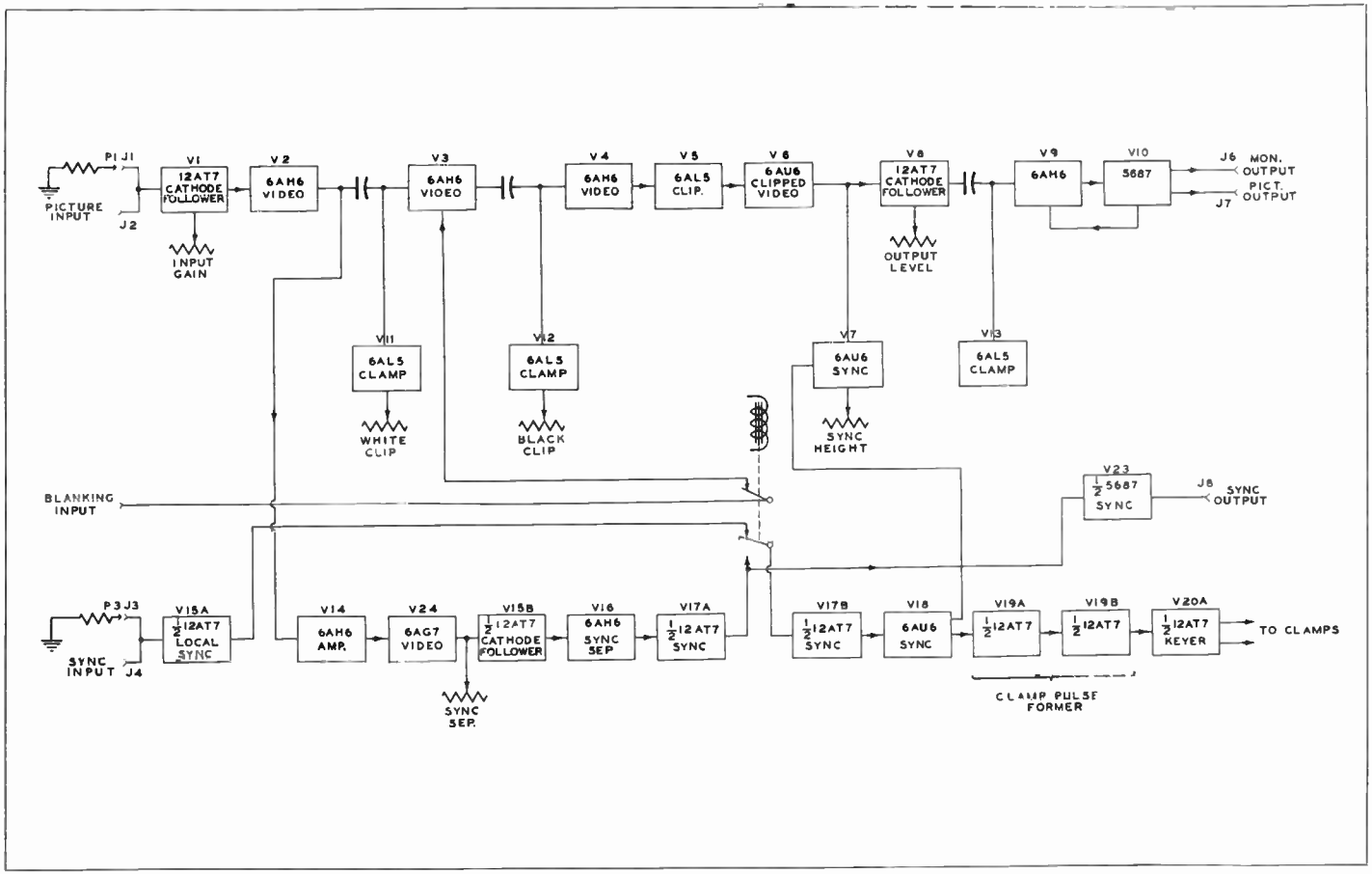

Figure 6.6C. Block diagram G. E. type TV-16-B stabilizing amplifier.

picture signals which must exceed 1.4 volts peak-to-peak of composite waveform, a wire jumper is removed from terminals which lowers the monitor output to 2/5 of the picture output. For composite signals of 1.4 volts, 1 to 1 monitoring is used.

As a general rule the output level should remain constant from this amplifier, and the OUTPUT LEVEL control is thus permanently set. Any variations in the level of the input picture signal should be corrected by adjusting the INPUT GAIN control.

When a remote CLIP FADE control is used, the picture signal can be faded to black level without disturbing sync amplitude. Normally, this control is left in the maximum "on" (clockwise) position. If left in the mid-position for normal operation, the picture signal will have incorrect contrast.

(2) OPERATION WHEN SYNC SIGNAL IS TOO LOW.

A. Turn the stabilizing amplifier INPUT SIGNAL SYNC SELECTOR switch to LOW SYNC position.
B. Adjust the other controls as explained previously.
C. Correct operation can be obtained with sync percentage as low as 10%, in comparison to normal 25% sync. The SYNC HEIGHT control is adjusted to give the proper sync amplitude. The front porch of the picture output signal will be slightly lengthened under these conditions. GE recommends that for sync percentages greater than 15% the selector switch be left on NORMAL.

(3) OPERATION WHEN PICTURE INPUT SIGNAL IS NOISY.

A. If the noise consists of grass in the sync and blanking regions, turn the SYNC SEPARATOR control until the sync as viewed at the PICTURE OUTPUT or MON OUTPUT appears clean.
B. If the noise consists of spikes or very bad grass, turn SIGNAL SYNC SELECTOR switch to the NOISE position. If necessary, the SYNC SEPARATOR control is also used here.

(4) OPERATION TO MIX LOCAL SYNC WITH NON-COMPOSITE SIGNAL. This is the case where the stabilizing amplifier is fed from the mixer-switcher unit, which contains the video and blanking signals.

A. Sync from the local sync generator (usually taken from the pulse distribution panel) that is synchronous with the picture signal is connected to the SYNC IN jack on rear of amplifier panel.
B. Use the LOCAL-REMOTE SYNC switch to operate the relay. (See block diagram.)
C. The other controls are operated as in (1). The signal should be in fairly good condition in this case, as no long transmission circuits are involved.

(5) OPERATION WITH SYNC-LOCK UNIT. (See section 3.9.) In this case the local sync generator is slaved or locked with that of a remote generator. The SYNC OUTPUT of the stabilizing amplifier is connected to the SYNC INPUT of the sync-lock unit. SYNC and BLANKING signals are then taken from the local sync generators. Sync injection is as described in step (4). Blanking is mixed with the stabilizing amplifier as follows:

A. Local blanking from the pulse-distribution panel is connected to the BLANK IN jack on rear of panel.
B. Same as B in (4).
C. Same as in (1) except BLACK CLIP which should be adjusted to give the desired level.
D. By following the rest of operation as in (1) and (4), both local sync and local blanking are mixed at the same time.

When the incoming composite signal has insufficient setup, local blanking is injected into the stabilizing amplifier as in (5), and the BLACK CLIP control is adjusted to clip the signal nearer

to reference black (rather than at normal blanking level) thus increasing the setup percentage.

Since a stabilizing amplifier includes almost every type of circuit found in the entire TV system, the complete schematic and circuit functions are included in Chapter 8 under Maintenance.

6.7 *Operating the Film Chain*

The film chain at the TV station consists usually of at least two projectors to feed one film camera by means of the multiplexer (sections 1.11 and 3.13), a film camera-control unit, and a number of necessary accessories such as rewinders and splicers. The above mentioned sections should be familiar to the reader before undertaking this operational discussion.

Film is stored in tin cans which are filed in the film room in racks much as records are set on end in record files. The 35mm film will be found to have the perforations (sprocket holes) running along both edges. The silent type 16mm film is also perforated along both edges, but 16mm sound film has perforations along only one edge. This is adjacent to the picture frames of the film, the sound track being on the other edge. The small size of 16mm film does not necessitate sprocket holes along both edges to keep it straight. 35mm film is composed of a nitrate base and is highly inflammable. Such film takes very special handling and is not allowed to stand still in the film gate when ordinary projection lamps are used as in the shutter-type projector. 16mm film is on an acetate base, which is very slow-burning and called non-inflammable. Although this is not strictly true, it does take an intense heat or direct flame before burning, and the words, "safety film" are printed along the edges of this film.

Film of either size is coated on one side by a photosensitive *emulsion*. This is usually a form of silver halide suspended in gelatin, with silver deposited upon the coating after it has been reacted upon by light and chemically developed. This emulsion is the "dull" side in appearance, while the opposite side of the film is the "shiny" side. It is important that the operator learn to distinguish between the emulsion and base sides as will be mentioned later. *35mm projectors are threaded with the emulsion toward the lamp. 16mm film is threaded with emulsion toward the lens.*

Either 35mm or 16mm film is projected at the rate of 24 frames per second. This means that for 16mm film, the speed is 36 feet per minute, while the speed of 35mm is 90 feet per minute. Thus a standard 1000 foot reel of 35mm film runs for about 11 minutes, while the same footage in 16mm film runs for about 28 minutes.

The beginning of each reel of film is termed the "Protective Head Leader." This leader is either transparent or raw stock, 5 to 6 feet long for 16mm and 6-8 feet for 35mm film. This leader is used to protect the main part of the film during repeated threading procedures in which the film is twisted or bent. It is necessary since the sprockets must be properly threaded before the motor is started, otherwise the film is torn or mutilated. When the leader becomes torn or shortened, it should be immediately replaced by splicing a new leader of the required length onto the front end of the film roll. Splicing is described later.

Following the leader is the "Identification Head Leader." This contains 24 frames (therefore one-second duration) of reel number and picture title.

The next section of the roll of film is termed the "Synchronizing Leader." This consists of 20 frames ahead of PICTURE START mark, then 12 feet (for 35mm, or about 8 feet for 16mm), including picture start mark to picture. The rest of the description concerning this section of film is for 35mm, as no definite standards are, as yet, set for 16mm. The operator should always check his film when using 16mm size. The section is opaque, except: in the center of the first frame there is printed across the picture and sound track area a white line 1/32" wide upon

which is superimposed a diamond ⅓" high. In this same frame is printed SOUND START in white letters on black background. The next 15 frames are opaque. The PICTURE START mark is the 21st frame, and consists of black letters on white background, inverted in frame. (Upside down.) From the PICTURE START mark to actual picture, the leader contains frame lines that do not cross the sound track area. Beginning 3 feet from the first frame of picture, each foot is plainly marked by a transparent frame containing an inverted black numeral at least ½ frame high. Thus the operator is "cued" easily into the start of actual picture.

Now comes the main body, or "Picture Section" of the film. "Standard" reels for 35mm run a maximum of about 2000 feet, no standard prevails for 16mm size.

Toward the very end of the picture section is the "Cue" sections which consist of a "Motor Cue" and a "Changeover Cue." These cues are circular dots appearing in the upper right-hand corner of the screen, which some readers may recall observing in the movie house. At about 10 feet for 35mm and 5 feet for 16mm from the end of the picture section, circular opaque marks with a transparent outline are printed on 4 consecutive frames so that they cause a momentary "burst" of light at the upper right corner of the picture. Four frames occur in only 1/6 second, so the operator must be observant in noticing them. This is the "Motor Cue," which means that the operator starts the motor on the alternate projector to allow it to come up to sync speed before the actual changeover occurs. Twelve frames later is the beginning of the "Changeover Cue," which is printed on 4 frames as in the above motor cue. This is the cue to "douse" that projector and "undouse" the alternate projector which is cued in properly to take up the action where the other film left off. There is usually 6 to 8 foot length of "Trailer" on the run-out roll of film.

Dousing may be done by automatic electrical means, or by manual operation. When done manually, a lens cap is simply placed upon the run-out projector at the same time that the cap is

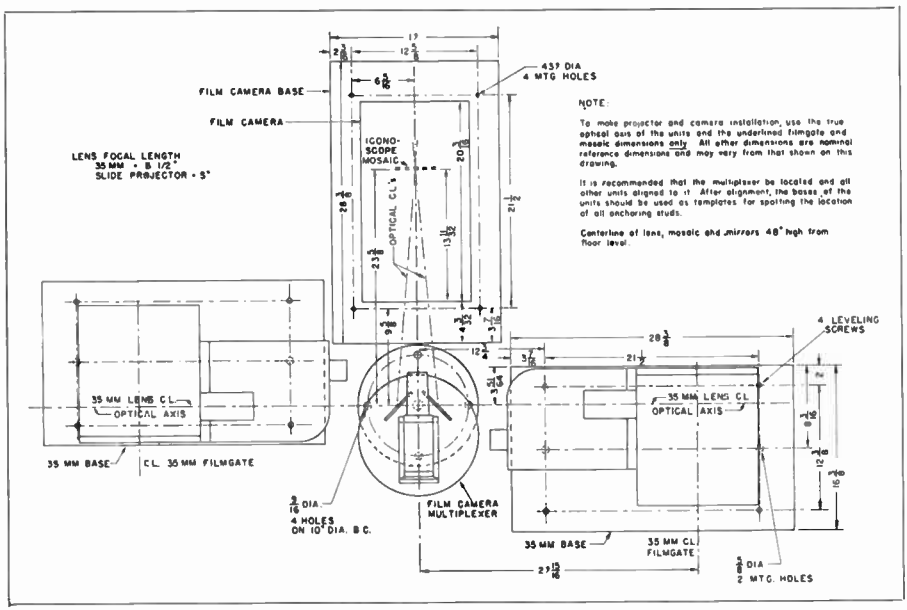

Figure 6.7A. Mounting dimensions and orientation of RCA 35mm TV projectors multiplexer, and camera. Courtesy RCA.

removed from the lens of the alternate projector. The run-out projector is then turned "off." Automatic means usually employ an electrically controlled auxiliary shutter. Solenoids on the shutters are energized through a relay with two "make" positions, so that one projector lens is "closed" while the other is "open." Operation of the changeover switch then reverses the function.

The film projector for TV broadcasting serves only one basic purpose so far as the video is concerned; this purpose is to illuminate the film in accordance with television transmission standards, and to focus the briefly illuminated image onto the mosaic of the iconoscope pickup tube in the film camera. The video signal pre-amp is therefore located in the *camera* to amplify the weak output signal of the iconoscope tube. It should be remembered, however, that when sound film is used, the sound track is 26 frames ahead of the corresponding picture frame, and is therefore in front of the photo-cell optical unit at the same time the corresponding picture frame is in front of the projector lamp film gate. The pre-amp for the photo-cell, therefore, is incorporated in the *projector* to amplify the weak audio output of the photocell. The output of this pre-amp then goes to the audio mixer console for proper control. The picture frames are halted momentarily in the film gate, whereas by the time the film has reached the sound drum, the motion is continuous. Otherwise the sound would be "jerky," as sometimes occurs with "loss of loop" in the film.

When a multiplexer is used to allow operation of two projectors with a single camera, extreme care must be exercised in properly aligning the projector, mirrors of the multiplexer, and camera housing opening where the light enters to reach the mosaic of the iconoscope. Fig. 6.7A illustrates a typical manufacturers drawing showing the exact orientation of the respective units to be obtained upon set up of the equipment. Whenever the multiplexer is cleaned, which must be done often, extreme care is exercised to return the mirrors to their correct position. An inexact focus resulting from any misalignment of this equipment results in an inferior picture.

Fig. 6.7B illustrates the Du Mont 16mm TV Projector, made by the Holmes Projector Company of Chicago. A complete description of the adjustment and operation of this projector will now be given* to acquaint the reader with general procedures. During this discussion the newcomer should note the following important points in particular: Method and position of inserting film, or "threading" the camera; loops on upper and lower side of film gate, and the very important phasing adjustment. It is well to observe the accompanying illustrations where the numbered components are mentioned in the text, and become thoroughly familiar with the proper terminology of projector parts.

The 60 light pulses in this projector required each second, one for each vertical blanking period, are provided by dual shutters having a single aperture. The rear shutter is positioned between the condenser system and the film while the front shutter is placed ahead of the projection lens.

The apertures in the shutters are aligned together and with both revolving in the same direction, the reversing principle of the projection lens creates a light pulse projected onto the mosaic that is cut off simultaneously from the top and bottom to the center of the aperture.

In practice it is desirable that the duration of the light pulse from the projector be at least ½% less than the vertical blanking interval of the station and since at present most television stations operate with at least 7% blanking, the shutters furnished as standard equipment have apertures equivalent to 6½% for maximum illumination.

If a station should operate with the

*Courtesy Du Mont Laboratories.

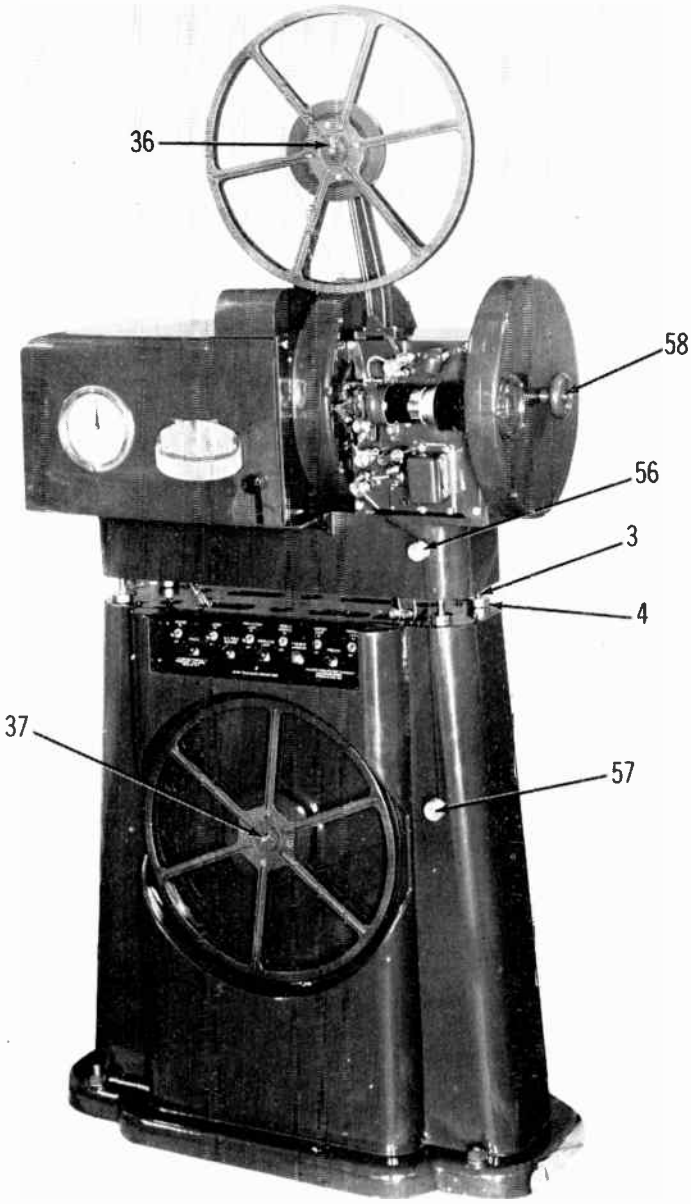

Figure 6.7B. Dumont type 5130-C 16mm projector. Courtesy Dumont.

minimum 5% blanking interval, shutters can be furnished accordingly.

Sound on the film is reproduced in a conventional manner using a high frequency exciter lamp, film stabilizer, photo cell and preamplifier which terminates in a low impedance output with stepped frequency compensation.

It is essential that the television projector be synchronized with the television system at all times. This requirement is assured through the use of a

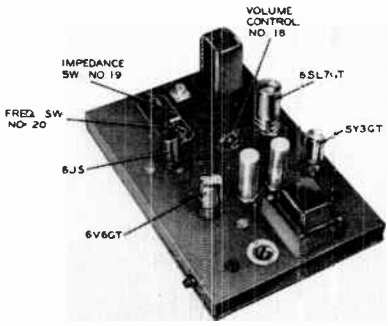

Figure 6.7C. (1).

large 3600 RPM synchronous motor with a separately excited direct current field winding to automatically phase the projector. This field, being polarized, always phases the motor in the same relationship with the television system.

PREAMPLIFIER. The preamplifier (Fig. 6.7C(1)) is a three-stage voltage amplifying device operating on 50 to 60 cycles alternating current at voltages from 107 to 127. The schematic is shown in Fig. 6.7C(2).

The photocell in the projector has a high resistance when dark. This resistance diminishes over a fairly wide range as more and more light is permitted to enter it. The sound track on the film varies the amount of light from the exciter lamp (which is accurately focused on the film by the sound lens) which enters the photocell. The cell acts as a valve, passing current in proportion to the amount of light which enters it. This changing current, passing through a resistor in the preamplifier, in turn varies the voltage applied to the grid of the 6J5 tube. Subsequently the 6SL7GT tube amplifies the signal until the voltage is sufficient to provide an adequate level for the console input.

The preamplifier supplies 6 volts AC at the line frequency to the pilot light in the control panel.

A 5Y3GT tube rectifies the current for the required plate and screen voltages.

The oscillator circuit supplies 1 ampere at 6 volts to the exciter lamp. The 6V6GT tube in conjunction with the oscillatory circuit, energizes the exciter lamp at approximately 80 KC.

The polarizing voltage of 90 volts direct current is also provided for the photocell in the projector.

The preamplifier and projector are connected together by shielded cables, the photo-cell cable being coaxial, the shielding being the ground lead. The exciter cable is a twisted pair, shielded to prevent the high frequency exciter current being picked up by the iconoscope chain.

CONTROLS. The control, identified by the designation VOLUME on its nameplate, as No. 18 in Fig. 6.7C(1) and as R13 on the schematic diagram is a continuously variable potentiometer. Its resistance element has a semi-log taper giving practically constant changes in volume for equal increments of rotation. The audio output level of the equipment is regulated by this control.

The impedance switch, identified by the designation OUTPUT-OHMS on the preamplifier nameplate, as No. 19 Fig. 6.7C(1) and as SW2 on the schematic diagram is a three-position switch connected to the output transformer. Three impedances are available; 30 ohms for connecting into a microphone input, 250 ohms and 600 ohms for connecting into the audio console circuit.

The switch, identified by the designation HIGH FREQUENCY on the preamplifier nameplate is No. 20 in illustration Fig. 6.7C(1) and is SW1 on the schematic diagram, provides stepped frequency compensation in the output circuit.

This compensation, in conjunction with a standard 16mm multifrequency test film, will attenuate or accentuate the high frequencies depending on which position the switch is set. The following figures represent the approximate deviation in DB at 5000 cycles relative to 400 cycles:

Position No. 1. .—5.0 DB at 5000 cycles
Position No. 2. . 0.0 DB at 5000 cycles
Position No. 3. .+5.0 DB at 5000 cycles

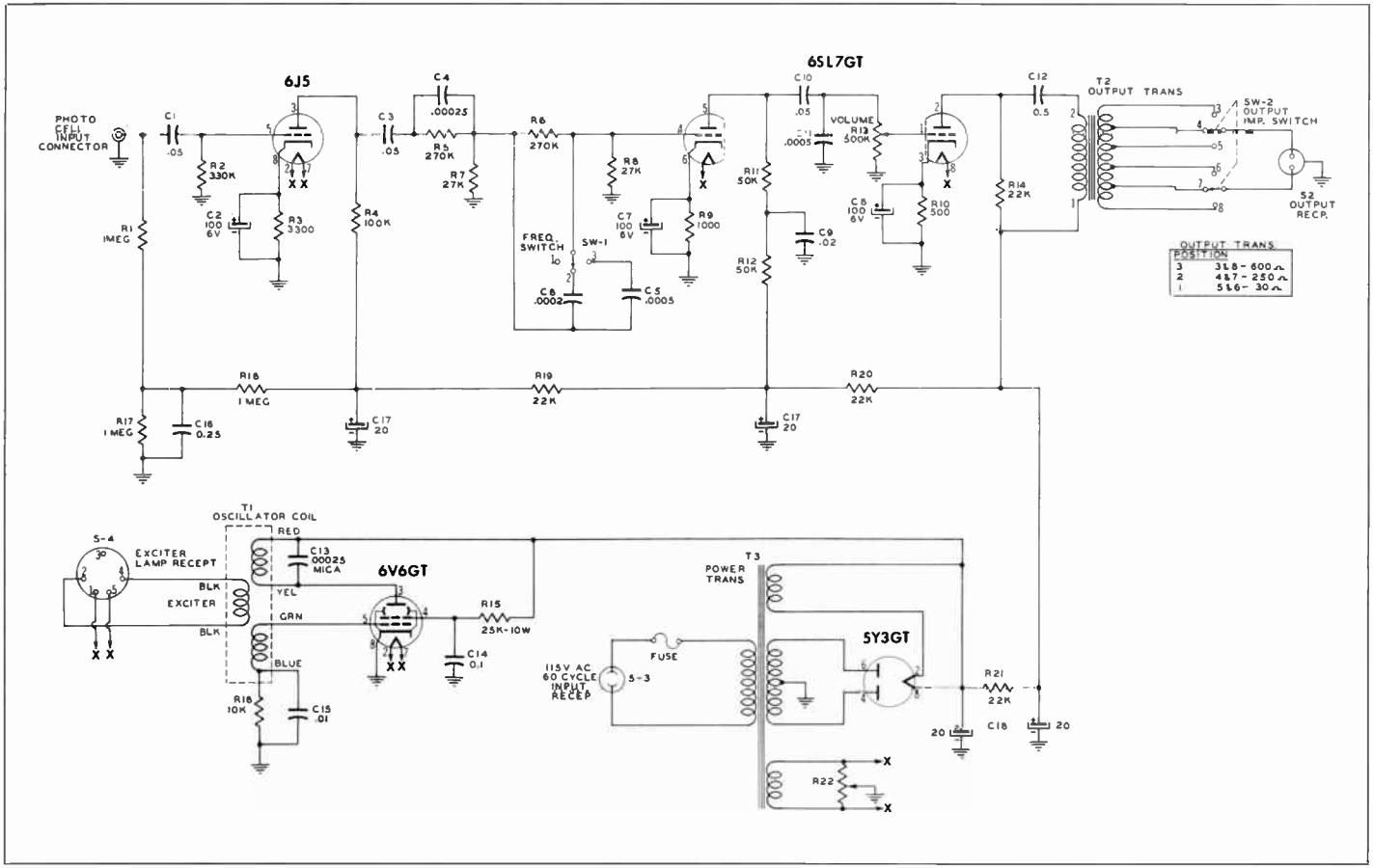

Figure 6.7C. (2) Schematic diagram of preamplifier.

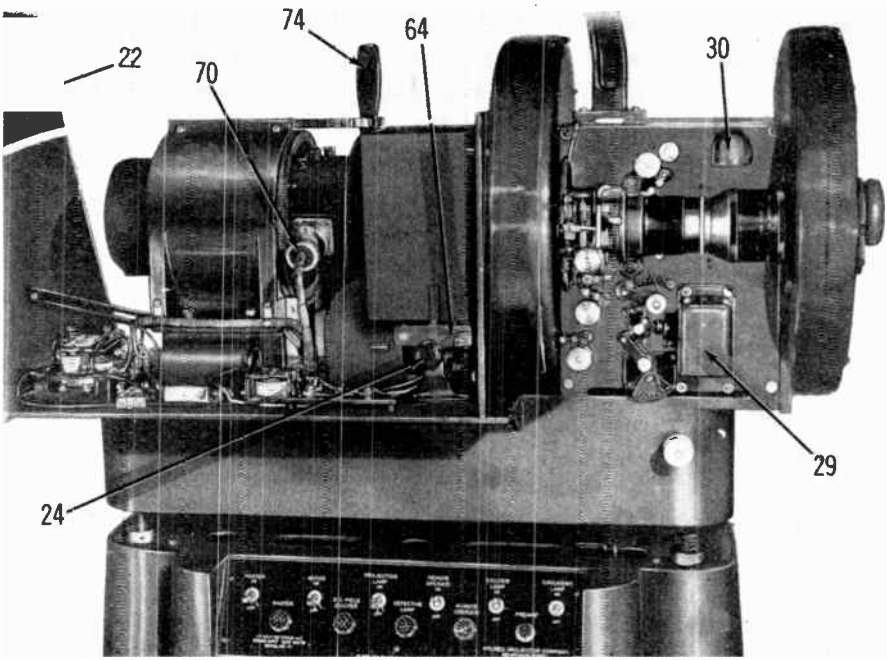

Figure 6.7D.

Films with good recording will provide the most desirable sound when run on position 2 which produces an essentially flat response. Films in which the background noise is high will sound better when run on position 1 which will attenuate the high frequencies. High frequency deficiency in films may be equalized by running them on position 3 which provides approximately 5 DB increases in the highs.

CONTROL PANEL. The following refers to Fig. 6.7D, unless otherwise indicated.

Master Switch — Power is supplied to all circuits and components when this switch is thrown ON. Elapse Time Clock will also start.

Master Pilot — This pilot will show AMBER when Master Switch is ON.

Motor Switch — Projector and blower will start when this switch is operated.

D.C. Field Exciter Pilot — This pilot will show BLUE, indicating direct current is being supplied for the motor from the rectifier.

Projection Lamp Switch — This switch controls the projection lamp and is electrically interlocked with the Motor switch so that it is inoperative unless the Motor Switch is ON.

Defective Lamp Pilot — This pilot is normally dark. When the projection lamp burns out the Defective Lamp Pilot will show RED. At the same time a buzzer will operate. When these visual and audible warning signals operate, the operator pulls outward on knob No. 24, as far as it will go, which moves the spare lamp into the proper position on the optical line and turns it ON. The buzzer will then stop but the pilot will continue to glow to remind the operator to change the defective lamp as soon as the reel is through.

After the defective lamp is replaced, knob No. 24 is pushed inward again, which will set the circuits for normal operation.

CAUTION — When pulling knob No. 24 outward to move the spare lamp, pull smoothly and slowly because if the motion is rough or erratic, the filaments

in the lamp may jar together and burn out.

Remote Operate Pilot — This pilot will show YELLOW when Remote Operate Switch is ON.

Remote Operate Switch — Throwing this switch ON lights a pilot at some remote station and the projector can then be operated by remote control. Referring to Fig. 6.7E a three-prong male plug is shipped with the equipment, inserted in receptacle No. 27 (Fig. 6.7E).

When the operator has the projector threaded, the Motor Switch is left in its OFF position, but Projection Lamp Switch is thrown ON. The Remote Control Switch is then thrown ON, which will indicate to the remote station the equipment is ready to run.

Control can again be acquired by the operator by throwing Motor Switch ON and Remote Operate Switch OFF.

Exciter Lamp Switch — This switch operates the exciter lamp which is hidden from view by exciter lamp cover No. 29 (Fig. 6.7D).

Preamp Pilot — This pilot will show GREEN when the Master Switch is ON, indicating the preamplifier is operating.

Threading Lamp Switch — This switch operates the threading lamp shown enclosed by its cover No. 30.

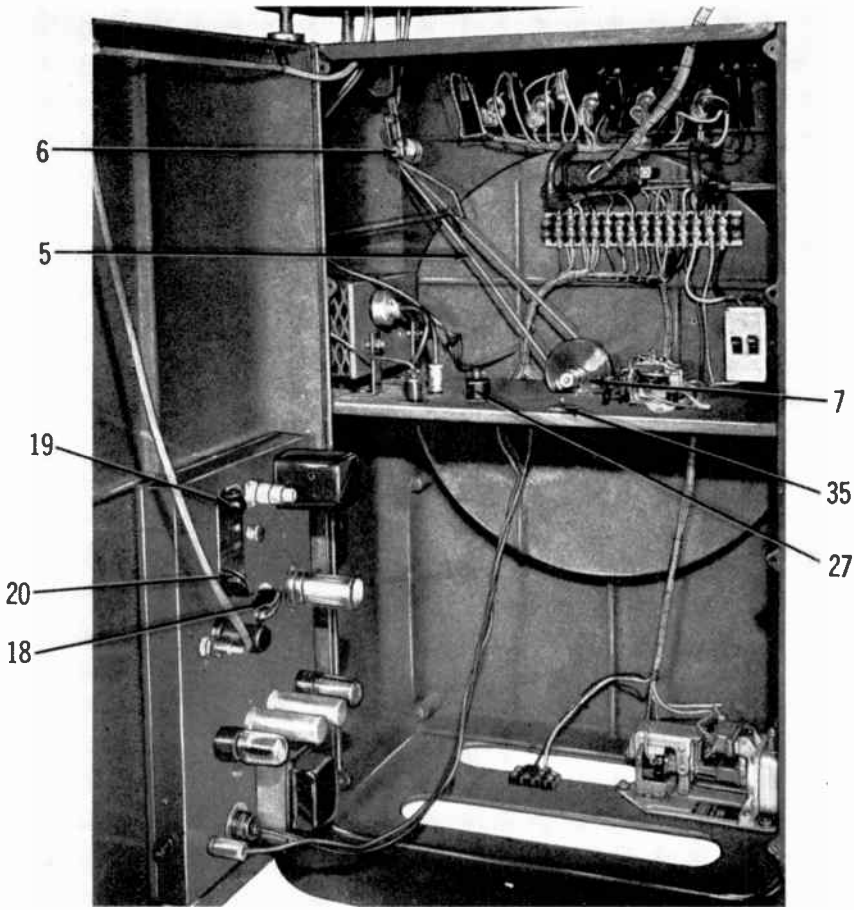

Figure 6.7E.

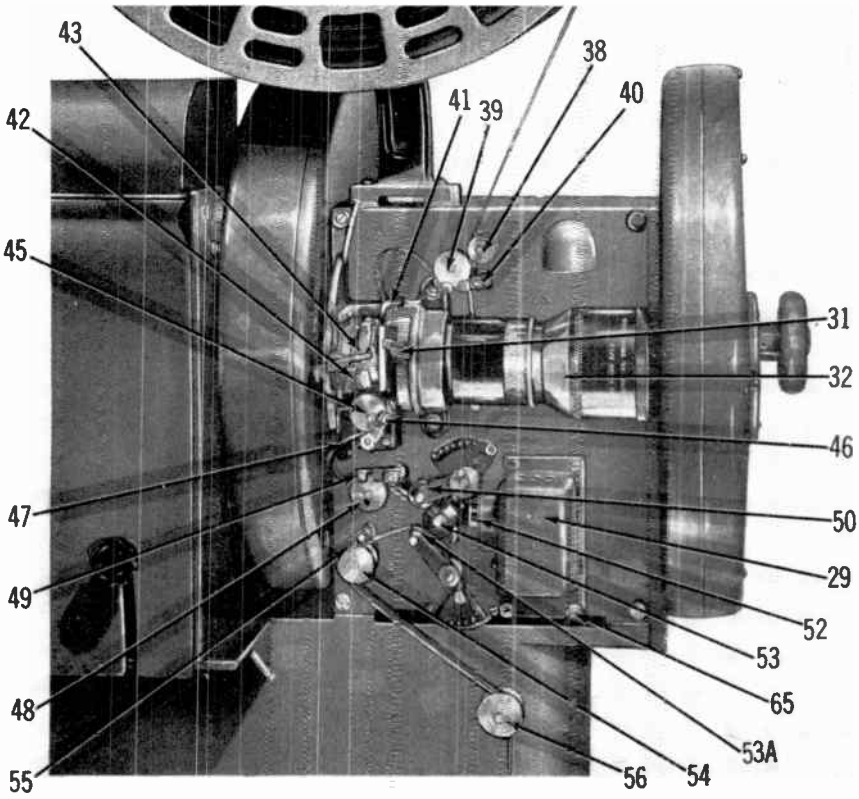

Figure 6.7F.

PRELIMINARY TEST. When all electrical connections have been made, throw Motor Switch ON. Master pilot, D.C. Field Exciter pilot and Preamp pilot should glow. Turn Threading Lamp ON by operating Threading Lamp Switch. Start motor by operating Motor switch. Approximately 3 seconds are required for the projector to come up to synchronous speed. A pulsating motor sound together with flickering of the D.C. Field Exciter pilot just before the projector attains synchronous speed is normal. Light projection lamp by throwing Lamp switch ON.

Referring to Fig. 6.7H, No. 33 indicates a variac for controlling the voltage to the projection lamp and No. 34 is a voltmeter indicating the voltage supplied to the lamp by the variac. Turn variac knob clockwise until the voltmeter registers the same as the lamp voltage which is stamped on top of the lamp. Lamps furnished as standard equipment are 115 volts.

NOTE — At least once a week the variac knob should be rotated back and forth a few times which will tend to eliminate any oxidization of the wire coils under the contact brush due to the high lamp current.

Position framing knob No. 31, Fig. 6.7F in the middle of its vertical movement. Focus the aperture on the camera mosaic by revolving projection lens No. 32 in either direction until a sharp rectangular outline appears. The lens is now very close to correct focus.

Referring to Fig. 6.7B the mean height of the center of the projection lens to the floor is 48" with an adjustment of approximately 1" above or below this figure. The projector head may be adjusted vertically, horizontally or

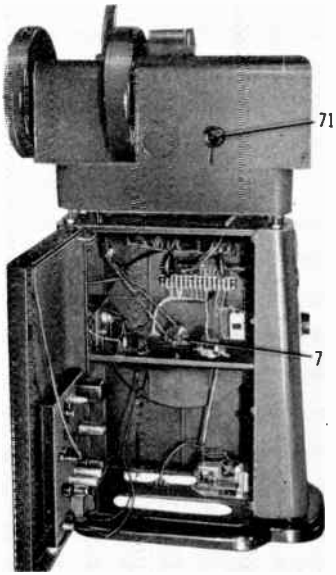

Figure 6.7G.

tilted up or down by adjusting the four circular nuts No. 4. Insert a small rod in the holes in the sides of the nuts and turn them in either direction as required.

After the projector has been adjusted so that the image of the aperture is properly positioned on the mosaic and the four nuts No. 4 are all down tight against the top of the base so the projector will not rock, take the four washers and hexagon nuts (which held the projector in its wooden shipping box) and place them inside the base on studs No. 3 and screw the nuts up tight.

Referring to Fig. 6.7E make sure that takeup belt No. 5 is in the groove of takeup pulley No. 7. Cross the belt ABOVE belt pulleys No. 6 and move the arm holding these pulleys out so that takeup belt will fit down into the groove in each pulley. Release the arm, and the spring attached to it will provide the proper tension both for belt stretchage and projector height adjustment.

PHASING. With projection lamp ON and directed onto the mosaic, note position of white phase bar on the monitor. If the phase bar is near the center of the screen, snap Motor Exciter switch No. 35, Fig. 6.7E, to the other side which will change the motor phase 180 degrees. The phase bar on the monitor will then either disappear or show only slightly at the top or bottom of the screen. If the latter condition results, proceed as outlined below.

Referring to Fig. 6.7G, turn phasing knob No. 71 in either direction (which will revolve the motor accordingly) until the phase bar has completely disappeared. Turn motor and lamp OFF.

SOUND. Light exciter lamp by operating Exciter Lamp switch in the control panel. Turn impedance switch No. 19, Fig. 6.7E, to the proper impedance. Set Frequency switch No. 20 on the No. 1 position and turn Volume Control No. 18 to 5 on its dial plate. Set the master control room volume to normal level so the monitor speaker will operate at its proper level.

Referring to Fig. 6.7F move an opaque card up and down quickly between sound lens No. 52 and stabilizer drum No. 53 which will modulate the light into the photo cell. A staccato

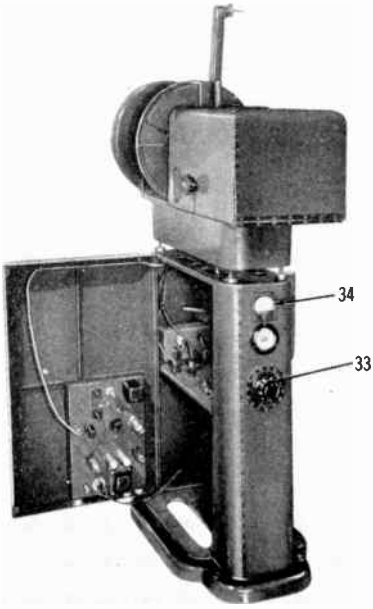

Figure 6.7H.

sound from the monitor speaker will indicate the audio section is in proper order. If this is not the case, see that all tubes in the preamplifier are down tight in their respective sockets, check all connections and/or check the exciter lamp. Instructions for replacing the exciter lamp are given later. Turn exciter lamp OFF.

BRAKE. An emergency brake is provided in case of film breakage and is operated by the handle No. 74, Fig. 6.7D, which extends through the top of cover No. 22.

In the event the projector must be stopped quickly, first snap OFF the motor switch and pull or push handle No. 74 towards the threading side of the machine. This will release the brake handle from its locking slot and spring action will operate the brake, stopping the projector in approximately 6 inches of film.

To release the brake, pull the handle back as far as it will go and over towards the back side.

CAUTION — Always make sure the brake is released before starting the projector. It is advisable to do this the instant the machine has stopped.

THREADING. Before threading projector, straighten out clip No. 36, Fig. 6.7B, on the end of the feed reel shaft and clip No. 37 on the end of the takeup reel shaft.

Referring to Fig. 6.7F, open feed sprocket shoe No. 40 by pressing downward on it. Open picture gate by pressing forward on arm No. 42, which will let pawl No. 43 drop down and hold gate open. Open intermittent sprocket shoe No. 46 by pressing same downward. Open takeup sprocket shoe No. 49 and hold back sprocket shoe No. 55 by lifting each up.

Regardless of the type of film being projected — standard release prints, transcription films, direct reversals, etc. — the *picture or titles must be upside down* and the sprocket holes must be on the *outside* towards the operator.

Position the full reel on the feed arm shaft and align the small circular slot in the reel hub with the round key on the shaft. Push reel in as far as it will go and snap clip over so it is at right angles to the shaft. Unwind approximately five feet of film.

Place film in back of guide roller No. 38 and around feed sprocket No. 39. Grasp film with right hand above roller No. 38 and hold it between the flanges of the roller. Hold the film in back of sprocket No. 39 between the forefinger and middle finger of the left hand. Moving both hands back and forth in unison, work film onto sprocket until the sprocket teeth project through the holes in the film. Reach over with the left thumb and close shoe No. 40 which will conform to the curvature of the sprocket as shown.

Place film in back of guide rollers No. 41, continue it down through the picture gate and around intermittent sprocket No. 45. Grasp film with the right hand above rollers No. 41, leaving a loop as shown. Hold film with the left hand just below intermittent sprocket No. 45. With the right hand move film forward so that it lays between rollers No. 41 and with the left hand work film onto sprocket No. 45. Reach over with the left thumb and close sprocket shoe No. 46.

With the film still held by the right hand, make sure it is lying flat and down in between the long side guides into which the pressure plate of the picture gate fits. Close picture gate by lifting upward on pawl No. 43.

Continue film down between sprocket No. 48 and shoe No. 49, under roller No. 50, around sound drum No. 53, over the top of roller No. 53A, between sprocket No. 54 and shoe No. 55 and down over the top of roller No. 56.

Leaving a loop approximately the one shown as No. 47, position film on takeup sprocket No. 48 and close shoe No. 49 by pressing downward on it. When making loop No. 47, do not make it so large it will rub on the shutter housing. Conversely, do not make this loop so small the film will be pulled taut between the intermittent sprocket No. 45 and takeup sprocket No. 48.

When positioning the film on hold-

back sprocket No. 54, pull film to the left as far as it will go and then move it to the right until the sprocket teeth enter the film. Close shoe No. 55 by pushing it down. If the film is properly threaded, stabilizer roller No. 50 will normally be raised a short distance up from drum No. 53 as shown. The small loop under roller No. 50 is essential for proper operation of the stabilizer drum.

Referring now to Fig. 6.7B, place an empty reel as LARGE or LARGER than the full reel on the lower reel shaft and lock same in position by snapping clip No. 37 over. Bring film down from guide roller No. 56, around roller No. 57 and underneath the take-up reel, as it revolves in clockwise direction. Insert end of film in the slot in the reel hub and revolve reel until film is taut.

Extending from the front of the machine is a knob No. 58 which, when revolved, turns the entire mechanism. Revolve this knob "top going" 5 or 6 times. This will turn the mechanism in the proper direction and it can then be noted whether or not all sprockets are moving film and whether or not all loops stay the proper size. If this procedure shows the machine is properly threaded, it is ready to run.

OPERATING. The technique of coordinating the television projector with other types of programs in the station will of course depend on the individual methods evolved by each station. The following is a general outline which may be supplemented to fit existing conditions.

It must be remembered that approximately 3 seconds are required to bring the projector up to synchronous speed from the time it is started. An opaque starting leader should be used during this interval. The operator (and remote control operator) should practice starting the machine until the exact length of film is determined together with the elapsed time from start to synchronous speed. After the length of film is known, some cue mark may be placed on the leader the required distance from the projector picture aperture. In this way the operator, knowing the time required to run the starting leader, can start the projector so many seconds BEFORE the picture is to appear.

If a number of subjects are to be connected together on a reel and run at different intervals, enough leader should be spliced at the end of each subject to allow the machine to stop and then to be run again until starting cue of the next subject is at the picture aperture.

FRAMING. Under normal conditions, when projecting film which has been printed to standard specifications, the amount of framing necessary will be so small that the movement of the aperture image on the mosaic will not be noticeable due to the picture being larger than the masking on the pickup tube.

In the event film is run on which the pictures have been misprinted, it may be necessary to frame so much that the aperture image will appear on the mosaic, reducing the size of the transmitted image.

Extending out from the back of the projector is a large handwheel. Rotating the handwheel will tilt the projector head up or down, as desired.

If it becomes necessary to frame so much that the picture on the mosaic is cut off at the top, turn the above-mentioned handwheel away from the threading side, which will move the picture up on the mosaic. If the picture is cut off at the bottom on the mosaic, turn the handwheel towards the threading side which will lower the picture on the pickup tube.

REEL ADJUSTMENTS. To keep a full reel of film on the feed reel arm from overrunning, a friction means is employed consisting of a disc fastened to the feed shaft against which presses a fibre plunger.

After months of continuous use the action of the plunger on the disc may cause a noise. Wet the end of the finger with oil and place it on the surface of the disc against which the plunger bears.

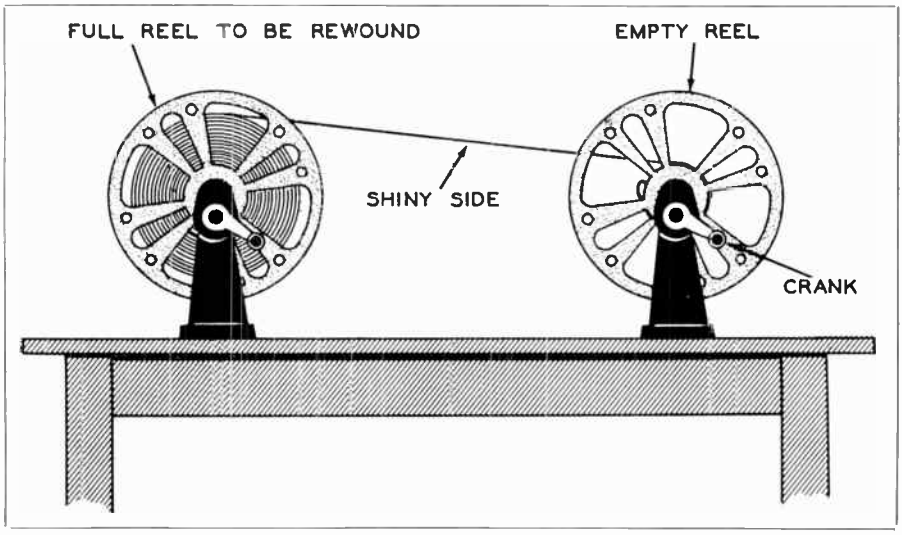

Figure 6.71. Method of rewinding film.

CAUTION — Too much oil will render the friction means inoperative.

The clutch provided on the takeup reel shaft consists of a free-running pulley driven by the takeup belt and a felt-faced disc keyed to the shaft. The disc No. 7, Fig. 6.7G, is forced against the pulley by spring tension. The tension on the film by the takeup reel may be varied by loosening the knurled screw in the collar on the end of the takeup reel shaft and moving the collar in or out, as desired.

The takeup reel should revolve the moment the projector is started. This is imperative because if the film becomes slack, the momentum of the reel will tend to snap the film as it gains speed.

REWINDING. A pair of hand or bench rewinds may be shipped with the equipment or purchased later and consists of two elements or separate fixtures, one with a revolving spindle geared to a hand crank and the other with a stationary spindle on which the full reel revolves. The rewinds should be clamped or fastened to a table or shelf approximately 30 inches apart, Fig. 6.7I, so that the geared unit is on the right and they should be so positioned that the film travels from one reel to the other in a straight line and, particularly, the film should not strike the flanges of the reels.

Place an empty reel, as large or larger than the full reel to be rewound, on the right (geared) fixture. Remove the full reel from the projector and, as most reels have a square hole in one side, turn the reel over and place it on the left-hand fixture so that the square hole is towards the rewind. The film will then come off the top of the reel, as shown (Fig. 6.7I), the emulsion side will be up and the sprocket holes in the film will be away from the operator.

Carry the end of the film straight across and place it in the slot in the hub of the empty reel. Revolve the crank so that the reel revolves in a clockwise direction, as indicated by the arrow. Rest the left hand lightly on the full reel.

PROJECTION LAMP ADJUSTMENT. The condenser system of the projector has been designed to accommodate a large variation in projection lamp positioning without any sacrifice in evenness of mosaic illumination. The system will also take care of a wide variation in lamp filaments.

In the event a new lamp is installed

and a slight unevenness of illumination is noted, it may be adjusted as outlined below.

Adjusting screw No. 64, Fig. 6.7D, positions the spare lamp. Directly opposite this screw is a similar one which can be reached from the back of the machine. Each has a locking nut on it.

Standing at the back side of the machine, turn the back screw in a clockwise direction, which will move the main lamp outward. Turning the back screw counter-clockwise allows the lamp to be moved inward. When performing the last operation, always keep knob No. 24 pushed inward each time the screw is turned.

To adjust the spare lamp follow the same instructions as outlined above by turning the screw No. 64 in the desired direction.

Exciter Lamp. The exciter lamp should be examined every two or three weeks to ascertain if the filament is sagging and/or the bulb is blackened in the vicinity of the filament. A sagging filament will tend to attenuate the high frequency response and may introduce noise into the sound system. A blackened bulb will tend to lower the output of the sound system. Either of the above mentioned conditions are sufficient for lamp replacement.

Pulling outward on exciter lamp cover No. 29, Fig. 6.7F, will expose the exciter lamp. To remove the exciter lamp, turn it counter-clockwise as far as it will go and pull straight out.

Before replacing a new lamp, note the base has three elongated slots. The socket in the projector is provided with three studs which are so positioned that the lamp can be inserted only one way. Place lamp in the stocket and turn it until the slots are aligned with the socket studs. Press lamp inward and turn same clockwise as far as it will go. Replace exciter lamp cover.

Due to the wide variation in lamp filament centering, a new lamp may introduce excessive noise in the sound system. If this is the case, loosen slightly the four screws which secure the exciter lamp casting, one of which is shown as No. 65, Fig. 6.7F.

Move the casting up or down as required until the noise is eliminated. Tighten screws No. 65 just enough to hold the casting in place. If the screws are tightened too much, they will nullify the action of the four rubber mounts.

TIMING THE SHUTTER. The rear shutter is set at the factory to eliminate travel ghost, but if retiming is necessary, the following instructions should be followed:

Remove the rear shutter cover containing the condenser lens.

Stand on the threading side of the projector and holding intermittent sprocket No. 45, Fig. 6.7F, revolve shutter shaft until the intermittent sprocket has turned and has just stopped. This can be ascertained by rocking the sprocket back and forth (while revolving shutter shaft) until the point is reached wherein it is impossible to further rock the sprocket.

It is at this point that the opening in the shutter should be on the verge of uncovering the opening in the intermittent housing. If the intermittent housing opening is completely closed by the shutter, revolve shutter shaft until the intermittent sprocket turns again. Every other time the sprocket turns the shutter opening will be 180 degrees across from the intermittent housing opening.

If it is apparent the shutter needs adjusting, loosen the two ¼-20 Allen head set screws in the shutter hub. Holding the shutter shaft knob in the right hand (so shutter shaft will not move), revolve shutter the necessary amount in either direction so that the shutter opening just starts to uncover the intermittent housing opening. Tighten the two set screws SECURELY, as repeated stopping with the brake will tend to slip the shutter if the screws are the least bit loose. Replace shutter cover, etc.

ALIGNING SHUTTERS. If the rear shutter is moved the least amount on the shutter shaft, the front shutter must

be aligned so that the openings in both shutters are in line; that is, the corresponding edges of the openings must both cross the optical center at the same time.

To accomplish this, first remove the shutter shaft knob. Next remove the eight screws holding the front shutter cover and take cover off. Loosen two ¼-20 Allen head set screws in the shutter hub.

Referring to Fig. 6.7D, unscrew retaining ring and pull motor connector No. 70 out, which will electrically disconnect the motor. Turn variac down to zero voltage and throw both motor and lamp switches ON. Place an insulated object on the motor relay so that it is closed and making contact. Turn the variac up until approximately 20 volts are indicated on the voltmeter. This will cause the projection lamp to glow. WITH THE MOTOR NOT RUNING AND THE REAR SHUTTER STATIONARY, HIGHER VOLTAGE ON THE LAMP WILL CAUSE THE SHUTER TO BLISTER.

Rotate shutter shaft until the rear shutter opening allows light from the lamp to pass through the picture lens. Standing in front of the projector, position one eye so that the rectangular image of the picture aperture is in the center of the picture lens. Holding this position, rotate shutter shaft until one edge of the rear shutter opening is on the horizontal center line of the picture aperture image. Still holding the same position, rotate the front shutter until the corresponding edge of the opening is also on the horizontal center line of the picture aperture image, which will mean that the corresponding edges of the openings in the shutters will be on the optical center line. Tighten the two set screws in the shutter hub securely. Turn motor and lamp switches OFF and replace shutter cover and shutter shaft knob.

Insert motor connector No. 70 in its receptacle in the motor and screw retaining ring down tight. Be sure and

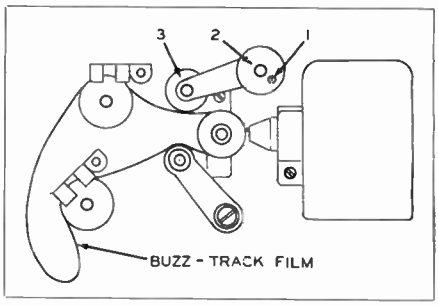

Figure 6.7J. Threading of buzz-track film in projector for lateral alignment on the sound drum.

remove the object which held the motor relay closed.

BUZZ TRACK FILM ALIGNMENT. In the event it becomes necessary to laterally align the film on the sound drum, a piece of 16mm buzz track film should be used, as the quality of sound reproduction will depend on the lateral alignment of the sound track relative to the light beam from the sound lens.

Secure a piece of buzz track film approximately 18 inches in length and cement it into a loop. Thread the projector as shown in Fig. 6.7J.

Start the projector and with the exciter lamp ON, turn the amplifier volume up until a substantial level is heard from the monitor speaker. Loosen locking screw No. 1, which will allow adjusting nut No. 2 to be rotated in either direction. This operation will move the flanged sound guide roller No. 3 in or out.

The buzz track film has a 300-cycle note recorded on one side of the sound track and a 1000-cycle note on the other. Adjusting nut No. 2 should be rotated until neither the 300-cycle or 1000-cycle note is heard in the monitor speaker. At this point the film sound track will be in proper alignment with the sound lens light beam. Make sure that locking screw No. 1 is again tightened securely.

SPLICING FILM. It is very important that all the emulsion be scraped off the film where it overlaps. It should be borne in mind that the emulsion extends clear across one face of the film and that film cement has no binding ac-

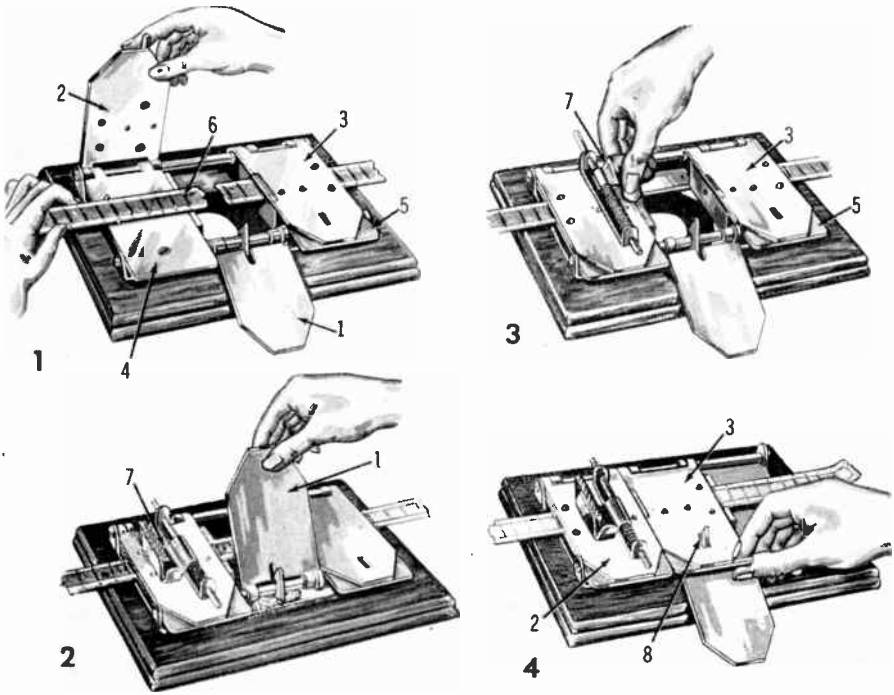

Figure 6.7K. A typical film splicer.

tion on the emulsion but acts only on the celluloid base.

A typical splicer is shown in Fig. 6.7K, and the following instructions refer to it.

To prepare the splicer for operation, swing cutting blade No. 1 towards the operator and raise scraper plate No. 2 and clamping plate No. 3 upward and away from the operator, Fig. 6.7K(1). Note that plates No. 4 and No. 5, upon which No. 2 and No. 3 rested, are provided with pins and guides for the film.

The practical position for the splicer is on the rewind table between the rewinds. Take one end of the broken film and with the emulsion side UP place the film between the two round guides and down onto plate No. 4 so that the two projecting positioning pins enter the sprocket holes in the film. Let enough of the film extend over the edge so that a clean cut can be made, as shown at No. 6 Figure 6.7K(1). With the film in this position, swing scraper plate No. 2 towards the operator and down tight onto plate No. 4.

Take the other side of the broken film and with the emulsion side UP position it on plate No. 5 Fig. 6.7K(1) and repeat the above operation so that clamping plate No. 3 rests on plate No. 5, as shown.

Swing cutter No. 1 up, over and down as far as it will go, as shown in Fig. 6.7K(2), which will cut both pieces of film to the required dimension. Swing cutter No. 1 back to its original position.

As shown in Fig. 6.7K(2), scraper No. 7 normally lies with the face of the blade upward. Scraper No. 7 is pivoted, so revolve it 180 degrees, as shown in Fig. 6.7K(3), so that the blade rests on the extended piece of film. With the right hand grasp scraper No. 7 and move it back and forth until all the emulsion has been scraped off. When

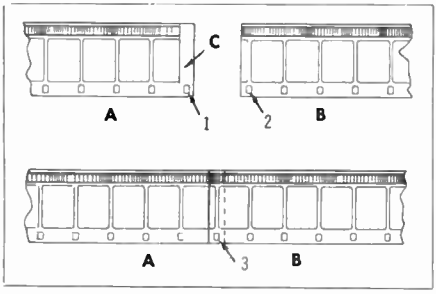

Figure 6.7L. Guide for hand-splicing of films. Courtesy Dumont.

all the emulsion is off, the film will be transparent in that area.

CAUTION — Do not put excessive pressure on the scraper, as it will tear the film.

After all the emulsion has been scraped off, release scraper and it will return to its original position out of the way.

Apply an even coat of "Safety Film Cement" on the area of the film from which the emulsion has just been scraped. Grasp Plates No. 3 and No. 5 (which have previously been clamped together) and swing them upward a few inches. Push both plates to the left as far as they will go and again press them downward until they stop and are locked by catch No. 8, as shown in Fig. 6.7K(4). Be sure to press down upon plate No. 3 until catch No. 8 operates.

CAUTION — When moving plates No. 3 and No. 5 to the left, be sure to keep them together so that the film clamped between them will not shift.

Leave the film in this position, Fig. 6.7K(4), for approximately 30 seconds and then open plate No. 2. Pull back on catch No. 8 and open plate No. 3 and remove spliced film. Pull back again on catch No. 8 and raise plate No. 5 and move both No. 3 and No. 5 to the right as far as they will go. Splicer is now ready for operation again.

HAND SPLICING. At some time or other it may be necessary to make a splice without the benefit of a splicer. If this is the case, the following instructions should be followed closely.

Figure 6.7M. General Electric television film camera. Courtesy G. E.

Referring to Fig. 6.7L, "A" and "B" are two pieces of film to be spliced, with the dull or emulsion side up. Film "A" is cut off 3/64" in front of sprocket hole No. 1. The emulsion is then scraped off the film for a distance of ⅛" back from the cut, as shown at "C." Film "B" is also cut off 3/64" ahead of sprocket hole No. 2.

Care must be taken in lining the two pieces up, as the sprocket holes must match and the corresponding edges of the pieces must be in a straight line, otherwise the splice will either jam or be thrown out of the picture gate.

Secure anything with a straight edge eight inches or more in length and lay it on a level surface. Lay film "A" on the level surface with the emulsion side up, so that the edge is against the straight edge. Apply an even coat of film cement to area "C." Making sure the emulsion side of film "B" is up, place it against the straight edge and on area "C" of film "A" so that sprocket holes No. 1 and No. 2 coincide, as shown at No. 3. Press down hard on the splice for approximately 30 seconds, wipe off excess cement and film is ready to run.*

The film camera contains the iconoscope pickup tube, the associated deflection yoke, video pre-amplifier and power supply. It should be recalled that the iconoscope tube is electrostatically focused, and therefore requires no magnetic focusing coil.

Fig. 6.7M illustrates the General Electric film camera with side door opened to reveal the video pre-amp. Mr. W. L. Shepard, engineer of GE has his hand on the polarity reversal switch which allows either positive or negative film to be used, or opaque or transparent material in the slide projector. Three peaking circuits are used in the preamp, and all electrolytic type capacitors are of the "plug-in" type. This permits easy replacement of capacitors, and rotation of spare capacitors to avoid possible trouble and prolong their useful life. Edge lights used with the iconoscope are high-intensity, pre-focused and independently adjustable for reduction of edge-flare. The deflection yoke is variable in position to obtain correct positioning of raster as in an image orthicon camera.

A film camera is aligned much as a studio film camera. A very important additional adjustment is the keystone control, found either in the camera or camera-control unit. This must be adjusted to eliminate the keystone effect discussed in Chapters 2 and 3. Upon actual picture transmission, a number of additional controls are used to effectively shade the picture.

Fig. 6.7N shows the GE control unit for the film camera. Controls for the picture and waveform monitors are located on the panel containing the picture kinescope and waveform oscilloscopes. This is the dual-type of waveform monitoring, with one scope normally set for display of the line waveform and the other for vertical (frame) waveform. All of the film camera controls are located on the channel control panel as illustrated. The Horizontal Sawtooth, Horizontal Parabola, Vertical Sawtooth and Vertical Parabola controls are used to adjust the shading of the transmitted film images. It is recalled that when an iconoscope-type pickup tube is used, these controls must usually be varied often during a film telecast.

Efficient operation of these shading controls comes only through long experience with correlating picture background effects with use of the shading circuits. The operator usually observes the waveforms for most accurate interpretation of picture shading. For example, if the line waveform slants downward from left to right into the region denoting black, the actual picture will be progressively darker toward the right of the raster. This calls for an adjustment of the H Saw control until the top of the line waveform is essentially parallel to the lines across the scope face. (See preceding section). When the line waveform takes a de-

*Courtesy Du Mont Laboratories and Holmes Projector Company.

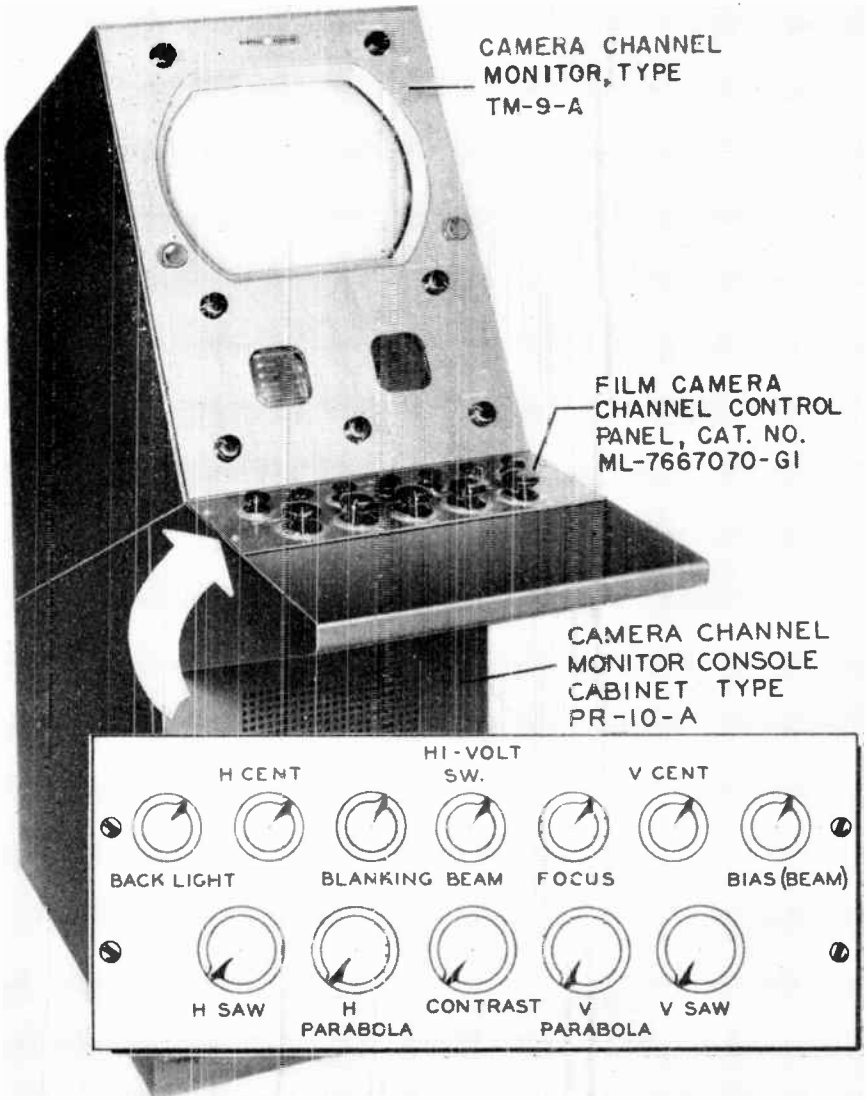

Figure 6.7N. Broadcast television film camera channel control. Courtesy G. E.

cided dip in the central portion, the center of the picture is dark. This usually calls for adjustment of the H Parabola (possibly also the V Parabola) in conjunction with H and V saw. The same kind of information is furnished by the vertical waveform monitor, which reveals shading conditions of the vertical components of the picture.

Illustrated in Fig. 6.7O are the basic correcting waveforms used in shading iconoscope tubes. In (1) is pictured the H or V Sawtooth of either polarity. Think first of the effect produced upon a raster if the saw is introduced at line frequency (15,750 cps). The saw voltage added to the tube grid would cause the raster to become brighter toward the right edge of the frame. If the polarity of the saw is reversed, the raster toward the left would become brighter. Thus, in the first instance, if the picture

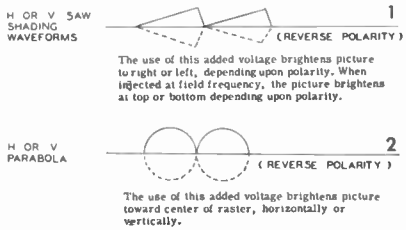

Figure 6.7O. Saw and Porabola shading waveforms. (See text.)

is progressively darker toward the right-hand side, the correcting sawtooth would even up the shading. If the picture is dark on the left, the reverse phase would be used to correct the shading. Observation of the line-waveform is even more exact than observing the actual picture; in the first instance the top of the line waveform would slant to the right, in the second case it would slant to the left. The H saw is then adjusted to obtain a "flat top" on the line waveform.

Observing the frame waveform indicates the shading condition of the vertical components of the picture. The V saw will brighten the picture toward the top of the raster or, in reverse polarity, toward the bottom. Dark portions in the center, indicated by dips toward black in the line or frame waveforms are corrected by the parabola shown in (2). It is observed that the shape of this correction waveform is such as to add to the brightness in the center of the sweep, either vertically or horizontally as required.

In the RCA system, the film camera control unit is similar in appearance to the studio camera control, with the addition of the H Parabola, V Saw and V Parabola shading controls. The studio-type camera control unit has the H shading control incorporated for use with studio image orthicon cameras.

A minimum of shading is necessary when the iconoscope tube is properly back-lighted and rim (edge) lighted. If edge-flare is noted upon set up of the camera chain, the rim lights are adjusted in both brightness and positioning until minimum edge-flare occurs. The amount of back lighting determines the amount of beam current necessary to reproduce an optimum gray scale picture, and is carefully adjusted upon camera chain setup in conjunction with beam current to obtain the best picture possible. Some operators, after they have become proficient in the use of the camera and control unit, vary this backlighting during a telecast to result in optimum picture gradation.

Controls for the waveform monitor itself are found both "behind the panel" and on the front. Those on the chassis itself are the less-used controls primarily for set up of the oscilloscopes. Controls behind the panel of the unit of Fig. 6.7N are as follows (waveform controls only):

H SPEED. Used to control the horizontal sweep sync for the line-waveform scope.

V SPEED. Used to control the vertical sweep sync.

HOR AMPL. (1) Used to adjust the amplitude (horizontally) of the H presentation.

HOR AMPL. (2) Used to adjust amplitude (horizontally) of the vertical presentation.

HOR CENT (1) Used to center the horizontal scope presentation.

HOR CENT (2) Used to center the vertical scope presentation.

HOR INTEN. To adjust brightness of the horizontal presentation.

HOR FOCUS. To adjust focus of H trace presentation.

VERT INTEN. To adjust brightness of the vertical presentation.

VERT FOCUS. To adjust focus of V trace presentation.

HIGH VOLTAGE. To adjust high voltage for both tubes (3KP1).

The waveform monitor front panel controls are:

GAIN. To adjust the vertical gain of both H & V presentations.

VERT CENT. (1) To center V presentation vertically.

VERT CENT. (2) To center H presentation vertically.

The high-voltage adjustment for the type 3KP1 waveform tubes is reached through a hole in the power supply cover. This control is adjusted for an accelerating potential of 1800 volts by means of a screwdriver through the hole. The H and V intensity and focus controls are adjusted for the desired brightness and sharpest focus possible. The H and V centering controls are then used to properly center the trace position. The H speed control is usually adjusted to show two lines of the video picture waveform, and the H amplitude control may be adjusted to fill the screen horizontally in this particular monitor. It is noted from illustration 6.7N that the line waveform scope has the calibrated screen on the face as described in section 3.5. The V speed control is similarly adjusted to show two fields of the video waveform and the H amplitude control is adjusted to fill the screen horizontally. The gain control is then adjusted for the desired vertical deflection. Since this amplitude depends upon the amplitude of the picture monitor gain, the picture monitor is adjusted first for desired picture size. (Review section 3.4).

In the operation schedule including telecast of film, it is necessary that the director be aware of the 2 or 3 seconds needed in shutter-type projectors to come into sync speed. Where, for example, short film excerpts are to be used in a show, the leader includes definite frame markings from which the director and operators may exactly judge the required time interval between the order "roll film" and actual "take" of film video. By this means the leader is run through until the designated mark indicates 3 seconds to the first picture frame. The projector is then stopped, and started to roll 3 seconds before the spot called for in the script. This time-interval is usually about one line of normal speed in reading the script. Film projectors are often operated from the TD position at the switcher panel. When several sections of film on one reel may be used during a program, the TD may observe on a preview monitor the spliced-in sections between the sequences to be used. Thus when one section is concluded, he switches to the next signal source being used while observing on the preview monitor the run-out of the film projector. He may then stop the projector at the next designated cue mark indicating 3 seconds to the following section.

On short film inserts such as discussed above it is necessary that the TD and production director be warned of the ending of that particular section of film. Although in some cases he may be sufficiently familiar with the content to know when to cut to the next signal source, most stations use the same type of warning cue as described previously for projectionist use. In this case the holes are punched in the upper corner of about 4 frames by a special punching device. The first cue is the alert, then the last 4 frames indicate the end of the actual picture content. This avoids the embarrassing possibility of showing the trailer on the film with its jumble of X'es on a glaring white screen.

Projectors of the pulse-light type do not require this practice of allowing 3 seconds to sync-in. It is recalled that with a pulse light projector, a single frame of film may be left stationary in the film gate without damage. No time is required in this system to sync-in. It is common practice to stop the projector with the first picture frame in the film gate, and the projector started at the exact time called for in the program script. Some readers may have observed filmed scenes where the opening scene is deliberately started as a "still," with the picture suddenly leaping into action a moment later.

Operational cues for film are as follows:

READY FILM. This is the alert to projector-operator and/or TD to expect the direct cue to start the projector running. The alert is usually more specific in installations using more than one projector, such as: READY FILM ONE, or READY FILM 2, etc. The numbers designate a specific projector.

FOOTAGE FROM 1 SECOND TO 60 SECONDS

Seconds	Footage	Seconds	Footage	Seconds	Footage
1	7.2″	21	12′—7.2″	41	24′—7.2″
2	1′—2.4″	22	13′—2.4″	42	25′—2.4″
3	1′—9.6″	23	13′—9.6″	43	25′—9.6″
4	2′—4.8″	24	14′—4.8″	44	26′—4.8″
5	3′	25	15′	45	27′
6	3′—7.2″	26	15′—7.2″	46	27′—7.2″
7	4′—2.4″	27	16′—2.4″	47	28′—2.4″
8	4′—9.6″	28	16′—9.6″	48	28′—9.6″
9	5′—4.8″	29	17′—4.8″	49	29′—4.8″
10	6′	30	18′	50	30′
11	6′—7.2″	31	18′—7.2″	51	30′—7.2″
12	7—2.4″	32	19′—2.4″	52	31′—2.4″
13	7′—9.6″	33	19′—9.6″	53	31′—9.6″
14	8′—4.8″	34	20′—4.8″	54	32′—4.8″
15	9′	35	21′	55	33′
16	9′—7.2″	36	21′—7.2″	56	33′—7.2″
17	10′—2.4″	37	22′—2.4″	57	34′—2.4″
18	10′—9.6″	38	22′—9.6″	58	34′—9.6″
19	11′—4.8″	39	23′—4.8″	59	35′—4.8″
20	12′	40	24′	60	36′

FOOTAGE FROM 1 MINUTE TO 60 MINUTES

Minutes	Footage	Minutes	Footage	Minutes	Footage
1	36	21	756	41	1476
2	72	22	792	42	1512
3	108	23	828	43	1548
4	144	24	864	44	1584
5	180	25	900	45	1620
6	216	26	936	46	1656
7	252	27	972	47	1692
8	288	28	1008	48	1728
9	324	29	1044	49	1764
10	360	30	1080	50	1800
11	396	31	1116	51	1836
12	432	32	1152	52	1872
13	468	33	1188	53	1908
14	504	34	1224	54	1944
15	540	35	1260	55	1980
16	576	36	1296	56	2016
17	612	37	1332	57	2052
18	648	38	1368	58	2088
19	684	39	1404	59	2124
20	720	40	1440	60	2160

Figure 6.7P. Running time chart — 16mm sound film. 24 frames per second — 36 feet per minute.

ROLL FILM. Sometimes given as HIT FILM. This is the direct cue to start the projector running. Immediately (usually 3 seconds interval) the cue:

TAKE FILM. Follows above order. This order usually designates a direct "cut" to the film control. If DISSOLVE TO FILM is given the lap-dissolve is made by the TD. The director is usually more specific in his cue, such as: DISSOLVE TO ONE, or FADE TO ONE, etc.

The table in Fig. 6.7P shows the running time chart for 16mm film.

It is a good idea never to leave film in the projector after use. The portion of the film in the machine is affected by the heat from the projection lamp (even after turning off) and by the housing and cams. Film is subject to shrinkage and stretching and should be removed immediately after use and stored in their respective cans. Many operators keep a moist pad inside the can with the stored film to minimize heat effects especially if the film room is dry and hot as is often the case.

Even with proper care of film rolls, the heat to which the film is normally exposed causes a certain amount of "buckling" at the film gate in old film. This causes a fluttering with consequent in-and-out focusing of the images on the picture tubes. Buckling is caused from the fact that the edges of the film being in direct contact with the projector mechanism, is subjected to more heat than the frame area subject only to the comparatively short bursts of light either from a pulsed-light or shutter action. This results in a faster shrinkage at the edges compared to that which takes place through the picture area, so that the frame is forced out of shape and flutters in the film gate.

If it is necessary to use old film which may have a noticeable amount of flutter, it is sometimes possible to restore a small roll sufficiently to use several additional times if a week's time is available before use. This is done by winding the film emulsion side out, and placing it in a humidor can with a highly absorbent blotter moistened with water and glycerine. The film is left in the tightly closed can for at least 7 days. If 35mm film is involved, a slight amount of camphor is introduced into the solution with which the blotter is moistened.

Extreme care must be exercised by the operator in the handling of film, especially in threading the projector. If this operation is improperly done, the loss of upper or lower loop is very apt to occur during transmission. Be sure that sprocket teeth are properly engaged in the sprocket holes before any pressure pads are closed on the film, to prevent holes or tears in the sound or picture tracks. Loss of either upper or lower loop results in an annoying jerky projection. If the projection becomes very bad, it is preferable to stop the show completely until the condition has been remedied. When the lower loop is lost, the bottom drive sprocket pulls the film off the intermittent pull-down claw, usually damaging the sprocket holes and possibly the rest of the film. There is one emergency operational procedure which has been practiced by highly experienced projector operators, but is not to be encouraged by inexperienced personnel. This is the practice of inserting the forefinger just between the sprocket and the lower edge of the gate, and watching intently for the instant when the pull-down claw is retracted, leaving the film momentarily free to be pulled down from the top loop. Two dangers exist in this procedure; firstly and most important is the danger to the finger from the sharp revolving sprocket teeth, and secondly is the danger of damaged film if the claw emerges as the film is being pulled through the gate.

6.8 Video Recording

In the larger television station, the film department is concerned not only with "playback" of film programs, but with making film shows either "live" or from monitor kinescopes. The latter process is of the most concern, since most "live" filming is hired-out to specialists in this field.

It should be recalled from section 3.14 that two basic methods of sound-on-film recording exist; the single-system and the double system. In the former system, the sound track is recorded at the same time as the picture, using only a single film. In the latter system, the sound and pictures are recorded on separate film, after which they are edited and "married" by joining on one film. It is only natural that the newcomer ask the logical question, "why bother with two separate films,

then go through all the process of combining them on one film?"

The reason is just as logical. The reader who is a photography fan knows that a film with a "fast" emulsion, therefore capable of good registration of images even in scenes requiring low illumination such as night-scenes, has a comparatively "coarse grain." This characteristic is not too important for the picture film in movies or telecasting, since the negative itself is not to be "blown up" into a larger print as is often the case in still photography. On the other hand, the sound track emulsion must be on very fine-grain film (therefore a "slow film"), to avoid excessive noise in the sound channel. Since the exciter lamp always supplies plenty of light to the sound track, the "slowness" of the film is of no consequence. Thus in the single system of video recording, a compromise must be made which never reaches the results possible in the double system method. The double system permits a fast film to be used for pictures, and a fine-grain film for the sound. This system also permits more accurate editing, since, in the single system, it is almost impossible not to lose some picture or sound in the editing process. The sound quality is also better in the double system not only because fine-grain film may be used, but from the fact that on single systems, the 26 frame lead of the sound track is often insufficient to remove all of the intermittent action of the picture gate, at the sound drum, resulting in a slight sound "flutter" on the audio channel. Even a very slight recording of flutter is emphasized upon *playback* of the film.

A unique single-system of video recording is used at the ABC network which eliminates trouble from sound flutter. The sound gate in this system is 82 frames ahead of the film recorder gate. By the time the film has progressed this far from the intermittent at the picture gate, all jerkiness has been removed and the film is rolling smoothly over the sound drum. A positive image is used on the transcriber kinescope (the reader should be thoroughly familiar with the contents of section 3.14) and the film is therefore developed as a negative, complete with sound. A positive print is then made and the sound is added in sync the normal 26 frames ahead of the corresponding picture.

The video recording technique at NBC, CBS and DuMont varies individually. The principles, of course, are the same. The DuMont system uses the double system of operation. The Eastman Television Recording Camera, discussed in section 3.14 and detailed later in this section is available for either single operation (with sound) or double system.

The reader should understand what is meant by making a "positive" from a negative film, lest he be confused by the usual snapshot printing process. In motion pictures, a film exposed to a "positive" image (just as your eye perceives the scene) has the "white" areas dark under exposure and after developing, and the original dark areas are "light." Naturally, if this were projected "as is," a "negative" image would show on the screen; that is, faces would be dark instead of light. Therefore, in this case, a "positive" contact "print" is made, although it is still on translucent material for the purpose of projection. When "reversal" film is used, no extra printing is necessary. This film, when developed, and treated a second time, reverses its shades so that portions which were black become white, and vice-versa. This is termed a direct-reversal positive.

Another film is the *Release-Positive* film. In this case, the image on the transcriber kinescope is made a negative image, and the release-positive film, upon developing, will be ready for projection.

Panchromatic film, which is sensitive to all colors through the red spectrum, is seldom used for kinescope recording. The transcriber kinescope is "highly actinic," which means a high value of light in the blue region, requiring only the inexpensive violet-blue sensitive film for recording. Color sensitivity of the film is therefore of no importance, and

FILMS FOR KINESCOPE RECORDING		
Film Type No.	Width	Name of Film
		Films for Camera Use
5240	16mm	Eastman Panatomic-X Negative Safety Film
5256	16mm	Cine-Kodak Super-X Reversal Panchromatic Safety Film
5261	16mm	Cine-Kodak Super-XX Reversal Panchromatic Safety Film
5276	16mm	Eastman Plus-X Blue Base Reversal Film
5277	16mm	Eastman Super-XX Blue Base Reversal Film
5302	35mm	Eastman Fine Grain Release Positive Safety Film
7302	16mm	Eastman Fine Grain Release Positive Safety Film
5373	35mm 16mm	Eastman Fine Grain Sound Recording Safety Film
		Duplicating Films
5203	35mm 16mm	Eastman Fine Grain Duplicating Pan. Negative Safety Film
		Films for Sound Recording
5372	35mm 16mm	Eastman Fine Grain Sound Recording Safety Film (for variable area recording)
5373	35mm 16mm	Eastman Fine Grain Sound Recording Safety Film (for variable density recording)

Figure 6.8A. Courtesy Eastman Kodak.

the handling and developing may be carried out under red safety lights rather than in total darkness. Types of film suitable for kinescope recording are listed in the table of Fig. 6.8A.

The RCA 5WP11 Transcriber Kinescope was described and illustrated in section 3.14. Due to the voltages used (as high as 27,000 volts), and method of construction, this type tube takes special handling techniques by the operating personnel. Since fingermarks may cause high-voltage leakage paths, the operational precautions illustrated in Fig. 6.8B are highly important. Marks on the face of the tube may appear in focus on the reproduced picture. Therefore the face must be kept clean and care taken to avoid scratches or blemishes.

The radiant energy output of this tube with 27,000 volts on anode No. 2 is illustrated in Fig. 6.8C. The effect of variation in grid No. 1 voltage on anode No. 1 current and on anode No. 2 current may also be seen. Focusing of this tube is controlled by the ratio of anode No. 1 voltage to anode No. 2 voltage. This ratio is usually adjusted by variation of anode No. 1 voltage by means of a potentiometer in the power supply

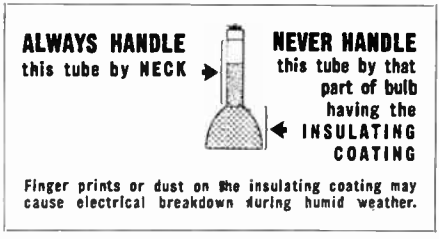

Figure 6.8B. Courtesy RCA.

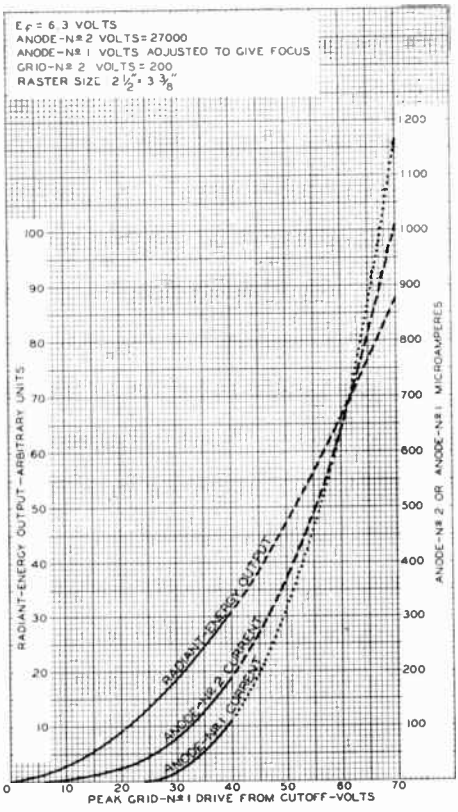

Figure 6.8C.

voltage-divider circuit. The operating range is from 4200 to 5400 volts.

Grid No. 1 voltage for visual cut-off is from -42 to -98 volts. Grid No. 2 is designed essentially to prevent interaction between the fields produced by grid No. 1 and anode No. 1. However, grid No. 2 may also be used to compensate for the normal variation to be expected in the grid No. 1 cut-off voltage of individual tubes. Adjustment of grid No. 2 voltage allows fixing grid No. 1 bias at a desired value to obtain about the same anode-current characteristics for individual tubes having different cut-off voltages. When grid No. 1 cut-off is adjusted in this way, grid drive is more uniform and anode No. 1 current variations are reduced.

The operator should always use full-scanning on the screen. Under-scanning over protracted periods of time results in diminished radiation of the under-scanned area. When full scanning is resumed, the diminished radiation of the previously under-scanned area is very noticeable, resulting in a characteristic similar to "edge-flare" or excess brightness at the borders of the picture. Stationary patterns should not be left on the screen for more than a few minutes, to avoid "burning in" on the screen.

For the purpose of familiarizing the reader with a typical film recording camera, the Eastman equipment* is outlined in setup and operational procedure. Note carefully the accompanying illustrations for identification of parts, and the safety features incorporated to avoid spoilage of the entire roll of film in case of trouble.

NOTE: Words capitalized in the text can be found on the illustrations. If such nomenclature in the text does not have a figure reference, the last preceding figure reference applies.

MOUNTING CAMERA. Inasmuch as the camera will be more or less permanently located in a relative position to the monitor tube, a substantial base for supporting the camera is recommended. By means of an intervening plate, the camera can be attached to a table with legs which are adjustable for height. Such a mounting will make it possible to align the optical axis of the lens with the Kinescope tube.

The distance between camera and tube is dependent upon the size of the tube employed and is adjusted during focusing so that the image completely fills one frame of the film.

ATTACHING LENS. Remove lens caps from the lens. Place the small end of the lens in the lens mount of the camera with the lens locating pin toward the floor. Rotate the lens until the pin is seated in the locating slot of the mount; then turn the KNURLED COLLAR of the mount, Fig. 6.8D, counterclockwise until the lens is held securely.

Set the LENS OPENING COLLAR at the largest lens opening, f/1.6.

*Courtesy Eastman Kodak Company

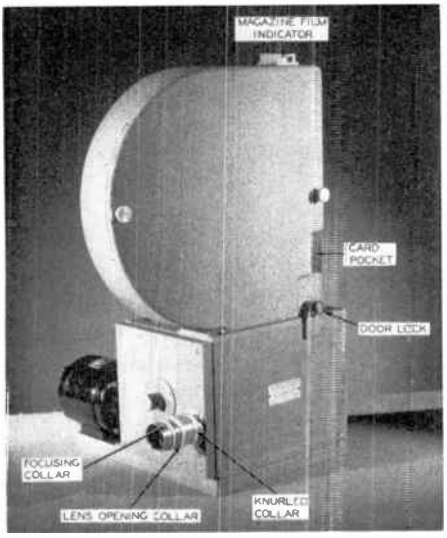

Figure 6.8D.

COMPOSING AND FOCUSING. Turn the DOOR LOCK and lower the side of the camera. To remove the PRESSURE PLATE, Fig. 6.8E, hold back the pressure plate SPRING and withdraw the plate. Remove the FOCUSING FINDER from the clip in the rear of the camera case and place it in the position occupied by the pressure plate. Be sure that it is seated squarely in the film channel.

To adjust the focusing finder to the vision of the user, focus the lens on a piece of printed copy, such as the printing on the lens box. Turn the FOCUSING COLLAR, Fig. 6.8D, until the image is sharp; then turn the eyepiece of the finder until the finder is adjusted to the vision of the individual.

In a similar manner, focus the lens on the televised image. The test chart televised by most stations makes an excellent focusing target. If the image does not completely fill the focusing finder aperture, move the camera away from the tube until there is full coverage. After full coverage has been attained, refocus the lens for sharpness. It is very important that the entire image be sharp. Continue to move the camera until there is full coverage and best overall sharpness of the picture image in the focusing finder.

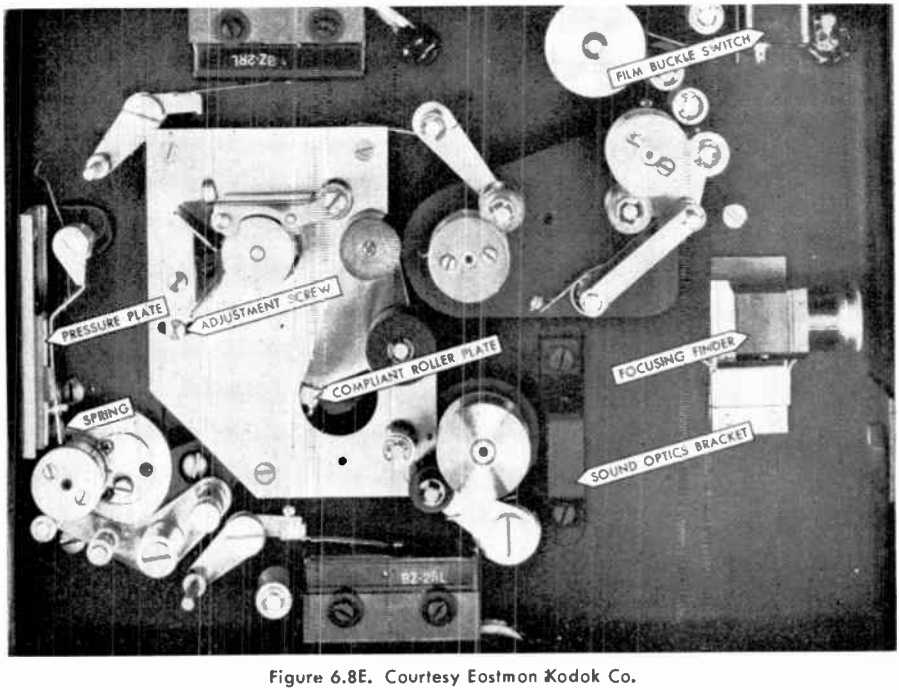

Figure 6.8E. Courtesy Eostmon Kodok Co.

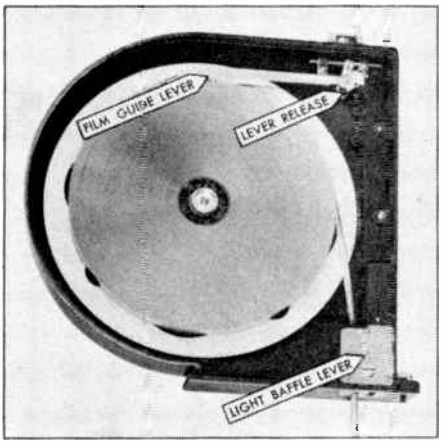

Figure 6.8F. Courtesy Eastman Kodak Co.

Remove the focusing finder and replace the pressure plate. Return the focusing finder to the clip in the camera case.

FILM. Film for the Eastman Television Recording Camera is supplied in 1200-foot lengths on type T cores. Either double- or single-perforation film can be used. This is the so-called silent or sound type of perforation.

Each 1200-foot roll of film is sufficient for 33 minutes filming time or ample for recording a 30-minute program.

THREADING FILM MAGAZINE

NOTE: The supply side of the film magazine must be threaded in a darkroom in total darkness or under a safelight recommended for the film being used. It is advisable to practice threading this side of the magazine before attempting the procedure in the darkroom.

Remove both magazine doors. Lay the magazine on a flat surface with the take-up side down. Push the FILM GUIDE LEVER Fig. 6.8F, toward the top of the magazine until it catches. Place the reel of film over the supply spindle with the film coming off the top of the roll, as shown in the illustration. Press down the LEVER RELEASE on the film guide so that the film will be held in place while the threading is completed.

Push the LIGHT BAFFLE LEVER toward the front of the magazine and thread the film through the baffle and out the opening in the bottom of the magazine. Replace the cover on the supply side. Turn the magazine over. The rest of the threading can be done in a lighted room.

Again open the light baffle and, without twisting the film, push it up through the remaining hole in the bottom of the magazine. If the film has considerable edge-to-edge curl, straighten the first three or four inches before attempting to thread it through the light baffle. Pull the film up through the channel on the take-up side, between the guide stud and roller, and over the roller. See Fig. 6.8G. Attach the end of the film to the core and wind on several turns of film by turning the core counter-clockwise. Hold the take-up core and pull down a loop that extends two inches below the bottom of the magazine.

Turn the FILM TAKE-UP KNOB, Fig. 3.14D(1), Chapter 3, in the direction of the arrow to a position that will permit the two arms of the drive to fall into DRIVE SLOTS of the take-up spindle, Fig. 6.8G. Place the cover on the magazine and move the take-up knob slightly to be sure that the arms

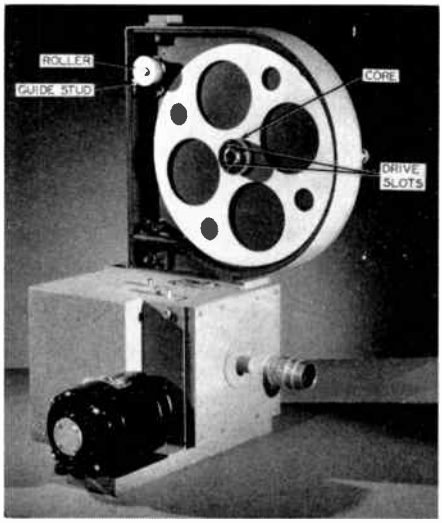

Figure 6.8G. Courtesy Eastman Kodak Co.

seat in the slots. When the cover is flat on the magazine, tighten the two knurled thumbscrews.

ATTACHING MAGAZINE TO CAMERA. Place the top of the magazine beneath the flange at the front of the camera. Thread the film loop through the opening in the top of the camera case. Lower the rear end of the magazine and be sure that the electrical contact pins of the take-up motor are inserted in the receptacle on the camera. Attach the rear end of the magazine with the thumbscrew.

CAUTION: Do not attempt to remove the film magazine from the camera without unlatching and lowering the side of the camera.

THREADING CAMERA — Silent Model. Pull down the supply film (nearest lens) until there is a loop approximately one foot long. Press in the CLAMP RELEASE, Fig. 6.8H, and raise the supply sprocket clamp. Pull out the PIN in the pull-down sprocket bracket and lower the forward end of the bracket.

1. Thread the film over the SUPPLY SPROCKET. Engage the film perforations with the sprocket teeth and close the clamp.

2. Form the upper loop with the film over the upper loss-of-loop lever. Pull the PRESSURE PAD toward the rear of the camera and place the film in the film channel. Release the pressure pad and *be sure that it is well seated in the film channel.*

3. Engage the film perforations with the teeth in the PULL-DOWN SPROCKET and close the pull-down sprocket clamp.

4. Thread the film beneath the stripper roller, beneath the lower LOSS-OF-LOOP LEVER, and between the two central guide rollers.

5. Pull down the TAKE-UP CLAMP, place the film under the guide roller, around the sprocket and between the UPPER GUIDE ROLLERS. Engage the film perforations with the teeth of the

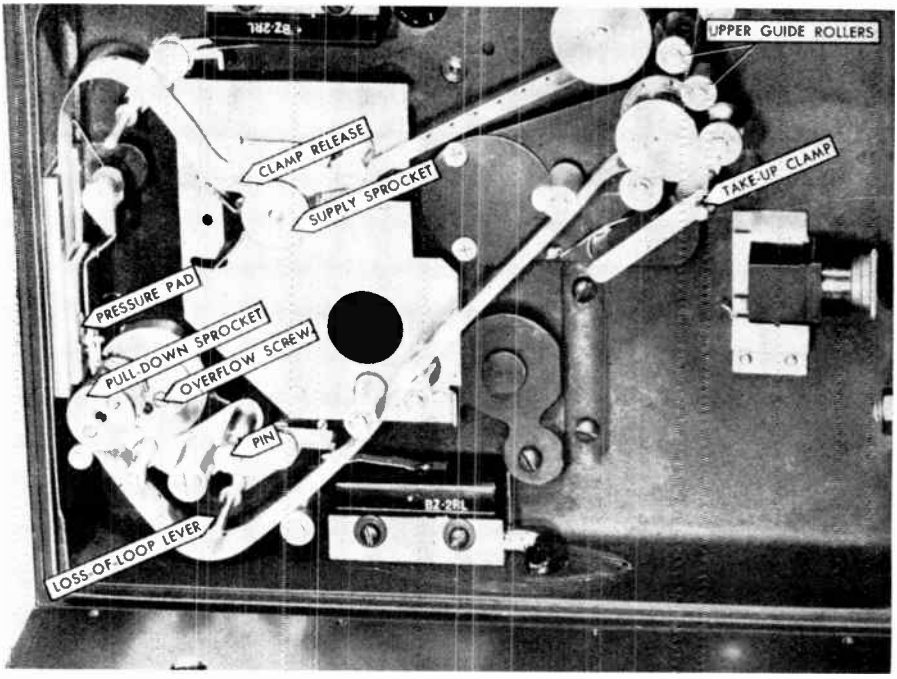

Figure 6.8H. Courtesy Eastman Kodak Co.

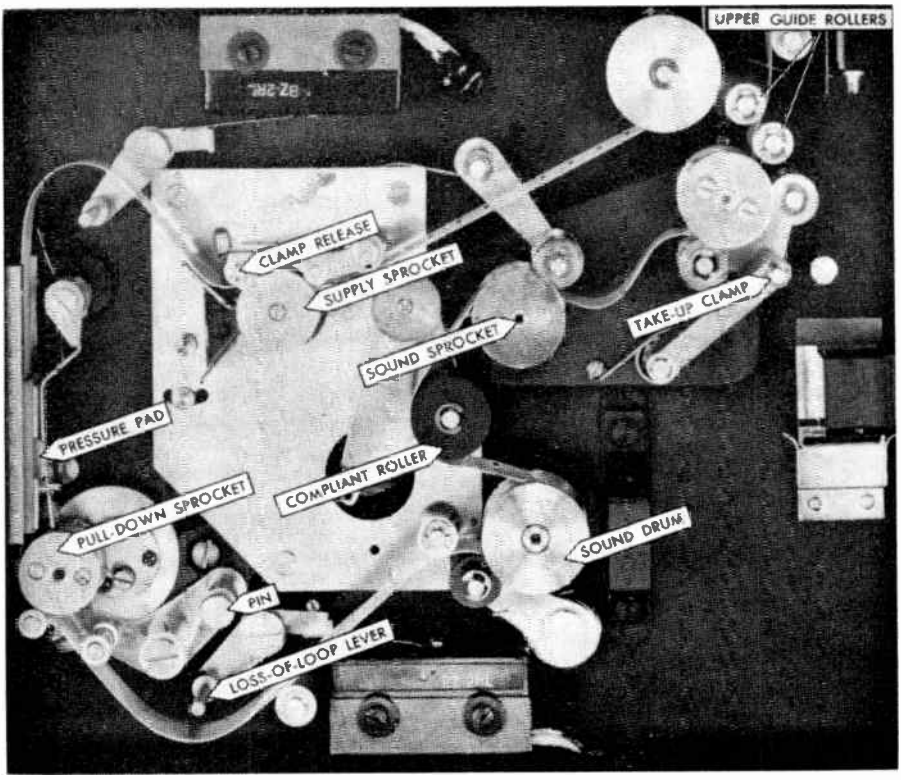

Figure 6.81. Courtesy Eastman Kodak Co.

sprocket and release the take-up clamp.

6. Take up any excess film by turning the film take-up knob in the direction of the arrow.

The upper and lower loops should be as shown in the illustration. They should not touch the front or bottom of the camera or the loss-of-loop levers.

When threading is complete, turn the top of the knurled MOTOR DRIVE WHEEL, Fig. 3.14D(1), toward the front of the camera several times to see that the loops are maintained and that the film is properly threaded.

Connect the power cord to a 115-volt, 60-cycle, a-c electrical outlet. Hold the light-baffle lever open, flick the control switch on and off several times, and observe the film.

Close and latch the door. If the door does not close readily, be sure that the supply sprocket clamp and the pull-down sprocket bracket are closed.

Watch the camera film FOOTAGE METER and run through about four feet or film.

THREADING CAMERA — Sound Model. Pull down the supply film (nearest lens) until there is a loop approximately one foot long. Press in the CLAMP RELEASE, Fig. 6.81, and raise the supply sprocket clamp. Pull out the PIN in the pull-down sprocket bracket and lower the forward end of the bracket.

1. Thread the film over the SUPPLY SPROCKET. Engage the film perforations with the sprocket teeth and close the clamp.

2. Form the upper loop with the film over the upper loss-of-loop lever. Pull the PRESSURE PAD toward the rear of the camera and place the film in the film channel. Release the pressure pad

and *be sure that it is well seated in the film channel.*

3. Engage the film perforations with the teeth in the PULL-DOWN SPROCKET and close the pull-down sprocket clamp.

4. Thread the film beneath the stripper roller, beneath the lower LOSS-OF-LOOP LEVER, and between the two central guide rollers.

5. Pull down the sound drum pressure roller and place the film between the SOUND DRUM and the pressure roller. Release the pressure roller.

6. Bring the film around the sound drum and beneath the COMPLIANT ROLLER. Raise the sound sprocket pressure roller, engage the film perforations with the teeth of the SOUND SPROCKET, and lower the pressure roller.

7. Pull down the TAKE-UP CLAMP, place the film under the guide roller, around the sprocket and between the UPPER GUIDE ROLLERS. Engage the film perforations with the teeth of the sprocket and release the take-up clamp. Allow a slight amount of slack between the sound and take-up sprockets.

CAUTION: Always take up all the slack in the take-up side of the magazine by turning the film take-up knob in the direction of the arrow. *Never start the camera unless this has been done.*

The upper and lower loops should be as shown in the illustration. They should not touch the front or bottom of the camera or the loss-of-loop levers.

When threading is complete, turn the tip of the knurled MOTOR DRIVE WHEEL, Fig. 3.14D(1), toward the front of the camera several times to see that the loops are maintained and that the film is properly threaded.

Connect the power cord to a 115-volt, 60-cycle, a-c electrical outlet. Hold the light-lock lever open, flick the control switch on and off several times, and observe the film.

When the camera is running, the end of the COMPLIANT ROLLER PLATE, Fig. 6.8E, should be approximately in the center of the opening in the mounting plate. Resistance of the roller can be adjusted by moving the compliant roller ADJUSTMENT SCREW. To increase resistance, move the screw toward the lens.

Close and latch the door. If the door does not close readily, be sure that the supply sprocket clamp and the pull-down sprocket bracket are closed.

Watch the camera film FOOTAGE METER, Fig. 3.14D(1), and run through about four feet of film.

OPERATION. The camera film footage meter is provided to record accurately the number of feet of film exposed in the camera. Set the meter just before beginning a run. To reset the meter, turn the knob counter-clockwise.

The MAGAZINE FILM INDICATOR, Fig. 6.8D, is provided to show if the magazine is loaded and the approximate number of feet remaining in the magazine after a partial run. It should not be used as an accurate indication of the number of feet exposed.

A small CARD POCKET is provided on the rear of the magazine so that information pertaining to film can be recorded.

The LOSS-OF-LOOP INDICATOR lights up when either the upper or lower loop has been lost during operation. To prevent film breakage, stop the camera at once. With slight circuit changes and the installation of suitable relays and power circuits, the loss-of-loop indicator circuit can be used to shut off this recording camera and start another camera.

The FILM BUCKLE SWITCH, Fig. 6.8E, is in series with the power supply to the camera motors and opens the circuit unless the actuating lever of the switch is held closed by the film running in a straight path. The motors are shut off when there is a failure in the film take-up system, a break in the film, or when the end of a film roll has been reached.

NOTE: The camera will not run without film unless the actuating lever of the switch is held closed.

The sound model of the camera has a

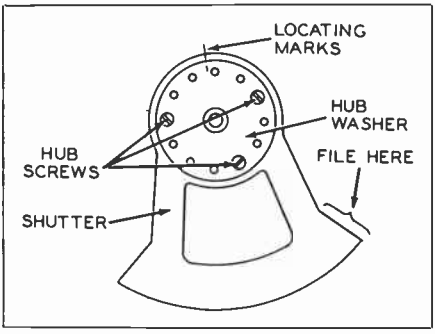

Figure 6.8J. Courtesy Eostmon Kodok Co.

SOUND OPTICS BRACKET, designed to hold a Western Electric sound optics pickup. If any other sound optics system is to be used, a suitable bracket must be provided.

ADJUSTING SHUTTER. After the correct lens opening has been ascertained by test-exposure recordings, adjustment of the shutter can be made to minimize shutter banding. When negative film is used, banding will probably be recognized on the film as a light streak across the frame. This light streak indicates that the scanning lines are not meeting and that a closed-shutter angle of less than 73° is necessary to reduce banding. Because the proper adjustment under the above conditions will probably be somewhere between 72° and 73°, the camera is supplied with a shutter that has a closed-shutter angle of 73°. To make this adjustment, proceed as follows:

Remove the lens by turning the knurled collar clockwise. Remove the 12 screws in the camera front. Remove the front.

Mark the HUB WASHER (Fig. 6.8J) SHUTTER, and front plant as indicated on the illustration. Remove the three HUB SCREWS, the hub washer, and the shutter.

File the section of the blade indicated in the illustration on a line leading directly toward the center. Be careful not to bend or distort the blade. Remove only a small amount each time (about ¼ degree) before making new tests. If an excess amount of the blade is removed, an overlapping will occur.

Align the three reference marks and replace the shutter, hub washer, and screws. Attach the camera front with the 12 screws.

OPERATIONAL MAINTENANCE. *Cleaning.* Clean the lens at regular intervals. The lens supplied with the camera is Lumenized; that is, a special hard coating has been applied to all air-glass surfaces. The tinted appearance of the lens is due to this treatment, which increases light transmission and decreases internal reflections.

If a reasonable amount of care is taken, there is no danger of removing the lens coating when the outer surfaces of the lens are cleaned. Remove dust or grit by gently brushing the lens surfaces with Kodak Lens Cleaning Paper or a fine camel's-hair brush. If further cleaning is necessary, use a drop of Kodak Lens Cleaner on the cleaning paper. Clean the focusing finder in a similar manner.

After each run, examine the film channel and the pressure pad. Remove film particles with a brush, a piece of soft wood, or, if necessary, use carbon tetrachloride to dissolve deposits. Excessive pile-up of emulsion at any one spot may be due to a damaged film channel or pressure pad. If such a pile-up occurs, replace the damaged part.

Within the camera and within the film magazine, clean all points which come in contact with the film. Remove all film particles which may scratch the film emulsion or jam the film in the light lock.

WARNING: Kodak Lens Cleaner and carbon tetrachloride are volatile solvents. Use with adequate ventilation and avoid prolonged breathing of the vapors.

OILING AND GREASING. Proper oiling is essential to efficient operation of the camera, and the time interval recommendations given below should be followed closely.

Geneva Housing — The oil level in this housing must be checked before initial operation of the camera and after each 15 hours of running time.

To check the oil level, remove the OVER FLOW SCREW, Fig. 6.8H. Proper oil level is indicated by a slight seepage of oil from this hole. If it is necessary to add oil, remove the mechanism cover as follows:

Remove the film footage meter dial knob by removing the shaft screw and pulling the knob from the shaft. Remove the nine screws from the mechanism cover and lift off the cover. Add oil to the BREATHER CUP, Fig. 6.8K, until oil seeps from the oil level hole. The oil level screw must be removed from the plate when oil is added, but be sure to replace the screw before running the camera. Use the light turbine oil supplied with the camera. This oil is mixed with a small quantity of silicone to prevent the oil from foaming or pumping through the breather cup. Additional quantities can be mixed by combining 1300 parts of light turbine oil with one part of No. 200 Dow-Corning Silicone Fluid.

During operation, oil may be pumped through the breather cup. Keep this oil wiped from the mechanism.

Each time the camera is moved or shipped, check the oil level in the Geneva housing.

At each lubricating period, examine gear teeth for excessive wear; check shafts, bearings, and collars for looseness. Fine metal chips or powder indicate excessive wear at some point.

Camera Mechanism — Every 10 hours of running time. Apply 4 or 5 drops of the heavy oil supplied with the camera (Apreslube No. 86) to the OIL CUPS Fig. 3.14D(1). The sound model, illustrated in 3.14D(1) has four cups, while the silent model, not illustrated, has three cups.

The bearings of the camera mechanism are either Oilite sleeve bearings or ball or roller bearings which require occasional lubrication. Use the oil supplied with the camera, a light turbine oil, or Kodak Special Lubricating Oil.

Film Compartment of Camera — Every 10 hours of running time. Place a small drop of light machine oil on the shaft of each moving film guide roller.

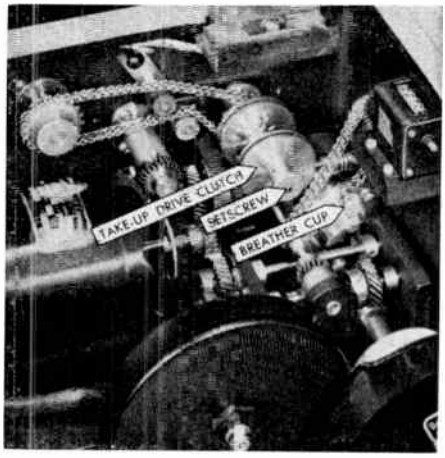

Figure 6.8K. Courtesy Eostman Kodok Co.

Use a fine wire or a toothpick and be extremely careful to remove all excess oil from the part so that oil will not come in contact with the film.

Film Magazine — Every 50 hours of running. Oil the bearings of the film guides and the shafts. Remove the three screws and the MOTOR CASTING, and oil the motor bearings and the gear reduction system. Remove all excess oil.

SERVICING. Minor repairs and replacements can be made by an experienced instrument worker. In general, however, all repairs on the camera and magazines should be made at the factory.

After some experience in operation, the running sound of the camera will be recognizable and any deviation from smooth running should be checked immediately. If there is any question about the source of the trouble, do not run the camera. Mechanical changes and additional maintenance information will be sent to users as experience from actual operation accumulates.

To adjust the force of the TAKE-UP DRIVE CLUTCH, Fig. 6.8K, use an ordinary spring scale attached to the take-up sprocket gear. The clutch should deliver 1¼ to 1¾ pounds of force on the gear when the motor is running. Loosen the Allen head SETSCREW and adjust the thumbscrew

until the correct force is delivered at the drive gear.

A good fine-grain film often used in kinescope recording practice, for both sound and picture, is the Eastman Type 5373. This film, although fine grain, seems to be adequate in speed for most kinescope recordings, since the screen of the tube is usually very brilliant. It is necessary, however, to know the nature of the program ahead of time in most instances, since "night scenes" requiring relatively low light-outputs over a considerable length of time may require a faster film. Some stations, however, especially in installations including their own developing processes, prefer this film which may then be developed in special strength developer solution for proper density.

Fig. 3.14A in Chapter 3 illustrates one of the more popular methods of kinescoping. The film for the camera may be the type 5373, and either this same film or the type 5372 for the sound, depending upon method of sound recording. It is noted from the film table in Fig. 6.8A that type 5372 is used for variable area sound recording, and 5373 for variable density. From the separate picture and sound negatives, composite release prints may then be made on Eastman Fine-Grain Release-Positive film type 7302 (or type 5302 for 35mm).

It is at this point that a very important operational function should be noted by the reader. To understand why it is necessary, it is pertinent to look briefly into the different historical backgrounds of 35mm and 16mm film processing. The 35mm type has been the "professional" type used for theatre projection, and has been universally produced by a negative-to-positive method. The "standard emulsion position" in the projector for 35mm film is emulsion side toward the projection lamp. Just the opposite "standard emulsion position" has been established for the 16mm film, which in the past has been an "amateur" product usually using a reversal film processed to a positive image. Thus the correct left-to-right orientation of the image would take place with emulsion side toward the projection lens, instead of toward the lamp. Adding to this problem is the fact that sprocket holes for 16mm sound-film is along only one side, and the release print must be such that the correct emulsion position is obtained when the film is properly inserted to engage the sprocket holes in the teeth. It should be recalled that in the description of the Du Mont projector described in the preceding section, the film was inserted so that the sprocket holes were on the outside of the machine, toward the observer. This is known as the "A" wind. A "B" wind is also used with the sprocket holes on the inside with the film coming off the top of the reel. These differences are necessary due to the different types of manufacture of projectors, some of which load on the left side rather than the right side. The problem, then, for 16mm sound films, is that of recording so that when the reel has been properly wound, regardless of "A" or "B" type windings, the projected images will have the proper left-to-right orientation of images.

It may now be seen that if the 16mm film is to have the emulsion side toward the projection lens, the process illustrated in Fig. 3.14A, since it is a negative-to-positive process rather than a direct-reversal print, would result in improper orientation of scenes upon projection. This problem is solved by *reversing the image* on the transcriber kinescope. Note that this does NOT mean a "negative" picture on the kinescope screen, but that the *horizontal scanning* on the kinescope is *reversed in direction* from normal. The final print will then be such that when the single-sided perforations are on the correct side of the projector, the emulsion will be toward the lens and proper images transmitted. NOTE THAT THIS IS DONE FOR 16mm FILM ONLY, WHERE THE EMULSION SIDE IS TO BE TOWARD THE LENS. For 35mm video recording, the

above negative-positive process would be correct with NORMAL scanning of the kinescope, since the 35mm projector is threaded with emulsion side toward the lamp.

The beginner may ask why the 16mm film could not simply be threaded just as the 35mm type, emulsion side toward the lamp. The reason is that all other commercial type 16mm film that comes in for use is already printed for the "standard 16mm emulsion position," and the overall operating procedure would be needlessly complicated. Since perforations are along only one side, the two types could not be spliced together to form a direct sequence of film as must often be done in telecasting.

Some of the very latest projectors of the 16mm type for television use are able to accommodate sound film with emulsion on either position, toward the lamphouse or toward the lens. In these projectors the sound lens is automatically re-focused for each position of the emulsion. In such equipment, direct-reversal films are threaded with the emulsion toward the lens (as are Kodachromes when used), but ordinary negative-to-positive processed films are placed with the emulsion toward the lamp. It is our purpose here to give all these facts to the new or prospective operator not to confuse him, but to give him the overall picture of the wide variance in equipment and operating techniques. He is then better equipped to grasp the particular equipment operating techniques which he may encounter on the job.

Whenever time is an important factor and it is known that only a single copy is required, the method of Fig. 3.14B is popular. In this case, a *negative* image is placed upon the screen of the transcriber kinescope usually by simply throwing a switch which takes the kinescope grid excitation from a negative video polarity stage. The picture may then be photographed on a direct-positive film such as Eastman Type 5302 (35mm) or 7302 (16mm). This is a single-system method of recording as a rule, where the picture

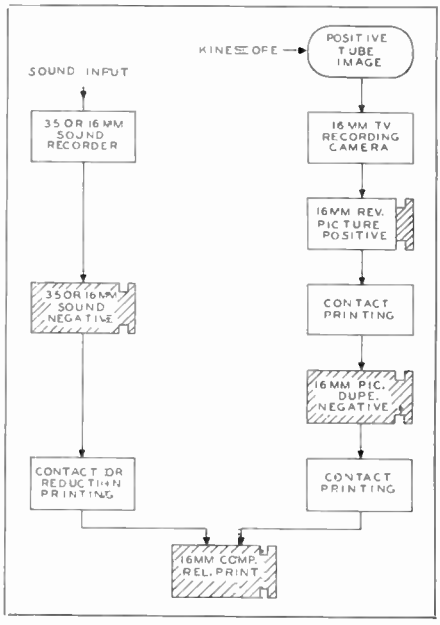

Figure 6.8L. Kinescope recording of positive tube image on reversal film.

and variable-area sound track are recorded simultaneously on a single pass. The sound track is 26 frames from the corresponding picture frame. Development in a positive-type chemical developer yields a direct positive picture and sound track image, with standard emulsion position which is suitable for projection and telecasting. As shown by the illustration Fig. 3.14B, Chapter 3, if it later becomes necessary to make copies, a dupe picture negative (duplicate negative) may be made to use in printing the final composite release prints. The sound track is usually re-recorded onto a negative film for use in printing the composite prints since use of a dupe negative sound track loses the highs in the sound spectrum.

Fig. 6.8L illustrates another alternative in kinescoping. A positive tube image is recorded on one of the reversal films to give a direct positive print, ready for telecasting and with standard emulsion position (16mm only). When copies are made, a dupe negative is made from the picture positive which is used to print the final composite print.

Recording of the sound onto reversal film is NOT considered good practice. The sound is usually recorded on a separate negative film as shown. This is then used for printing the final composite release print.

Following is the Eastman Kodak recommended procedure for determining correct exposure in kinescope recording:*

"The correct exposure for the film in photographing a kinescope tube image depends upon a number of factors, among which may be mentioned the type of phosphor used for the tube face, and the spectral character of the light it emits, the brightness of the image, spectral sensitivity of the film, the nature of the subject matter, the processing conditions for the film, etc. Before making any picture tests, it is desirable to correlate the brightness level of the tube with the density obtained on the film when the latter has been processed to the recommended gamma value. To do this a plain raster is used on the tube such as would be obtained by the use of the blanking signal without picture modulation. The brightness of the raster is varied by means of the video gain control or picture-tube grid-bias control. The beam current may be measured by a microammeter. Since the brightness of the tube is dependent upon the power input to the screen, this beam-current measurement serves as a measure of the brightness. A series of exposures may then be made by varying the beam-current in logarithmic steps. After processing the film to the recommended gamma value (0.6 to 0.7 for picture negatives, and 2.2 to 2.5 for direct positives), the density may then be read on a densitometer and plotted against the logarithm of the beam current. For a negative material which has been developed to a gamma value of 0.65, the negative density range normally made use of in the recording of a picture image is from about 0.20 to 1.4 or 1.5. A beam current which gives an intermediate density of around 0.8 to 0.9 might therefore be considered as providing an average brightness level corresponding to that of a picture tube image which will give an approximately correct exposure. Using this beam current as the starting point, a series of exposures over a smaller range may then be made with picture modulation on the tube, in order to arrive at an average exposure value which will be satisfactory for various types of subject matter."

The reader familiar with ordinary photographic techniques will immediately recognize the above procedure as being analogous to amount of light, exposure time, type of film and developing data for still picture photography. Gamma is the straight-line portion of the film characteristic curve. A film is chemically treated (developed) to a gamma of, for example, 0.7 by using a known solution, and time of development under a given set of conditions such as temperature, type of film, etc. (0.7 gamma in the negative will result in a final release print gamma of about 2.3). For a given value of gamma, the film *density* depends upon the brightness of the scene. (In video recording, the time of image exposure is fixed.) The camera lens, of course, may be "stopped down" to assure correct focus if brilliance of the tube screen is sufficient. Since the brightness of the kinescope depends almost directly upon amount of beam current, the above procedure uses the plot of the beam current on log paper as the abscissa. The density of the film, as determined by the densitometer or calibrated photocell unit, may then be plotted as an ordinate against the above logarithmic plot of beam current.

The resultant curve serves as a base for determining the range of brightness (in terms of beam current) which will produce an approximately linear density-log relationship. The range of the beam current over the linear portion of the curve should be about 30 to 1 for optimum TV use. This corresponds to a gamma in the final release print of about 2.3. This is the contrast

*Courtesy Eastman Kodak Company.

ratio which, in terms of the film, is the *density* ratio. It is the opinion of experienced engineers that the density range of film made specifically for telecasting should be over a lower range than films ordinarily used for the theater. The latter film usually contains a density (contrast) ratio of at least 50 to 1.

It should also be noted that for direct-positive film, the development should yield a contrast directly suitable for telecasting. In this case the final contrast ratio is desirable, and the film is developed to a gamma of from 2.2 to 2.5.

It is probably obvious even to the general reader that this coverage of video recording has been extremely sketchy. Since this department of a TV station includes an extremely wide range of techniques embracing chemistry, the many types of films and unusually wide range of practicing procedures, it would be impossible to include the detailed analysis in this book which must treat the overall layout. It can only be expected that the element of "mystery" which may have existed has been somewhat lifted, and that the operator will have a basic background of knowledge concerning kinescoping.

6.9 *The Synchronizing Generator*

In all the preceding descriptions of operational and set up procedures it has been assumed that the sync generator is delivering properly timed and shaped pulses to the equipment. In actual operating procedures, this generator is "fired up" first, and checked to ascertain its accuracy before applying the high voltage to other studio equipment. This section has been deliberately postponed with the hope that the reader has become more familiar with the purpose and use of these control pulses.

Fig. 6.9A illustrates a typical sync generator showing the location of the operational and adjustment controls. The AFC TIME CONSTANT and PHASE SHIFT controls adjust the timing circuits to properly lock-in to the chosen reference control voltage which is selected by the FREQUENCY CONTROL selector switch. This selects either 60 cycle power line, crystal oscillator or external control sources of timing base. The usual operation is with this selector switch set on "60 Cycle" position, which locks the timing circuits with the power line furnishing all studio equipment and film motors. When a remote broadcast is upcoming, the sync generator is "slaved" to the remote sync generator by placing this switch on the "EXTERNAL" position, and feeding the remotely-derived sync voltages from the phase shifter in the "Remote Lock-In" device into the "External Control" jacks on the sync generator (section 3.9).

The method of accomplishing this is illustrated basically in Fig. 6.9B. Since the entire functioning of the TV depends upon a properly operating sync generator, at least two such units are found at the studio. In case of trouble in one, the other may be immediately selected either by a switch or by patching on the pulse distribution panel. When a remote broadcast "checks-in" to the control room or master control, the remote sync-lock unit is adjusted and fed to the spare sync generator which is thus "slaved" in timing to the remote sync generator. Immediately prior to broadcast from the studio show to the remote location, the screens are faded to black and the slaved generator thrown into the circuit. Thus when the remote broadcast starts, no visible "roll-over" occurs in the home receivers. It is also possible to simply connect the sync generator being used on local shows to the remote lock-in device during the fade to black immediately prior to actual broadcast. Films and slide are often used, either as cut-backs from the remote show for local commercials, or as supers (superimposures) over the remote signal. Such procedure is common since this eliminates the use of a portable film projector and camera otherwise necessary if everything originates at the field location. In this case, the remote sync generator must have its vertical interval

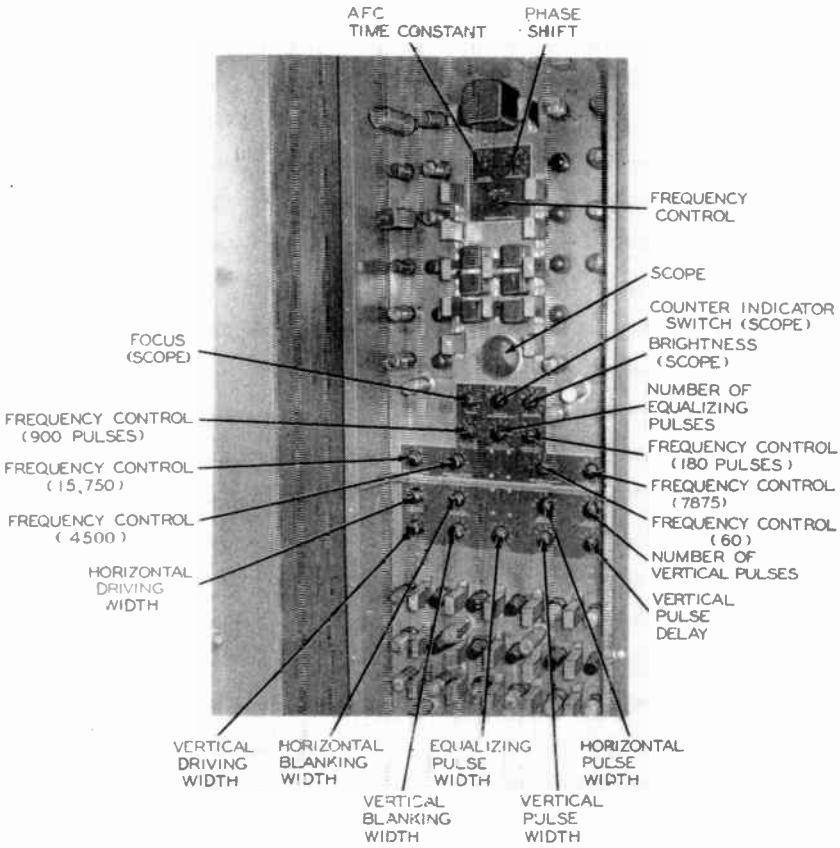

Figure 6.9A. View of RCA Sync Generator showing location of operating controls.

phased to allow proper lock-in of the film projectors at the studio. This procedure is carried out by the use of PL's (private lines) from control room to remote point, and the spare sync generator is usually used to allow exact coordination.

The reader should be thoroughly familiar with sections 3.3 and 3.9 before study of this section is attempted.

The top row of three controls on the central control panel in Fig. 6.9A concern the test oscilloscope. This scope is used to indicate the countdown of the frequency divider circuits, and the pattern is actually a series of elliptical dots rather than actual "steps" of the counting circuit. If the COUNTER INDICATOR switch is set to monitor the 7:1 countdown circuit, a staircase of 7 dots will appear if the circuit is functioning properly. The FOCUS and BRIGHTNESS controls are adjusted to give a clear indication on the screen.

All other controls concern the timing and duration of the various control pulses. These may be outlined as follows:

COUNTDOWN CIRCUITS. For proper frequency division.

H & V DRIVING SIGNALS. For proper frequency and width (duration).

H & V BLANKING SIGNALS. For proper amplitude and duration.

H & V SYNC PULSES. For proper amplitude and duration.

EQUALIZING PULSES. For proper number and width (duration).

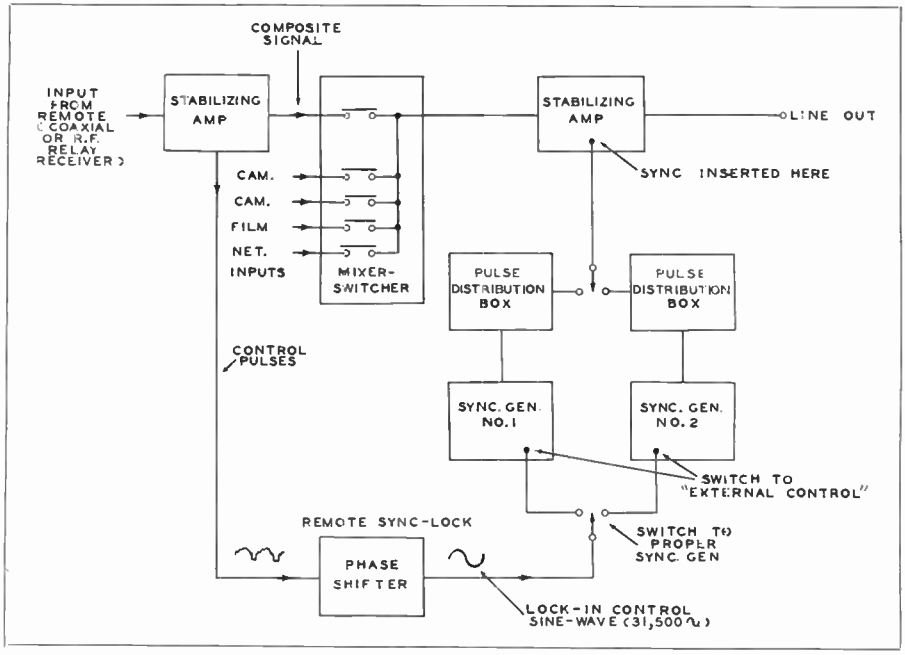

Figure 6.9B.

All of these controls are shown in Fig. 6.9A. Since the average operator is concerned only with adjustment of such controls after initial installation and adjustments have already been made, only this procedure is given here. Certainly if initial installation is undertaken, the engineer must have available the manufacturers instructions for installation and follow them closely.

For convenience, the basic operational functions of the sync generator under control of the operator are shown in Fig. 6.9C. In (1) is the formation of the combined H sync and equalizing pulses. (2) shows the relative firing of the H blanking and sync pulses. It should be borne in mind that this combination of sync-on-blanking does not take place at the sync generator. The blanking is usually inserted at the camera control units with the video, and sync is injected following the mixer-switcher unit. The purpose of (2) is to show the formation of the front porch on the composite H time. This front porch is only 2% of the line interval or 1.27 microseconds. The relative widths of the blanking and sync pulses are therefore very important as are all adjustments in the circuit. In (3) is illustrated the formation of the vertical sync blocs, and (4) shows the injection of the 6 V sync blocks in the middle of the 18 equalizing pulses, resulting in 6 succeeding and preceding equalizing pulses during the V blanking period.

The correlation of sync generator controls with these functions may now be seen. The countdown circuits may first be checked by the switch selecting the chain of frequency division circuits. In the RCA system the sequence is 7-5-5-3. Starting with the 31,500 cps master oscillator frequency, the sequence becomes 4500, 900, 180 and 60. The corresponding controls for these respective countdowns may be seen in the illustration of Fig. 6.9A. For example, if the scope should show only 6 dots instead of 7 with the selector switch in the "4500" position (countdown of 7), all other frequency divisions would result in the wrong output frequency.

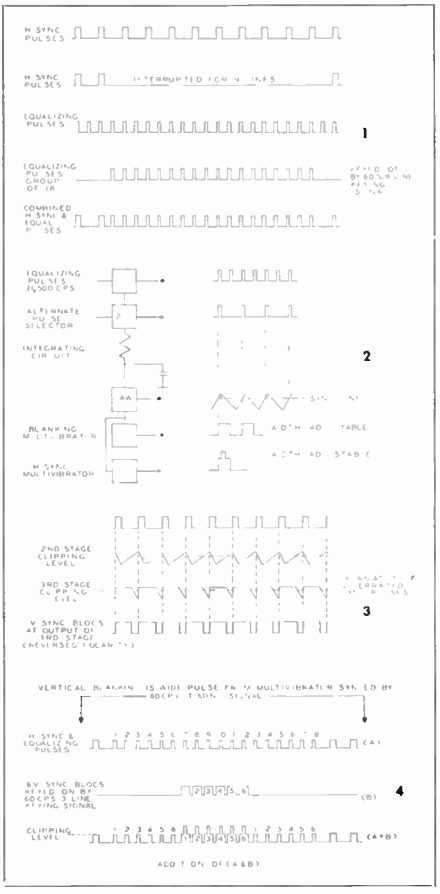

Figure 6.9C.

The FREQUENCY CONTROL 4500 PULSES knob must then be adjusted until the indicator shows 7 dots, indicating proper frequency division. All other countdown circuits are similarly checked and needed adjustments made to assure timing outputs to the wave shaper unit.

As shown in (1) of Fig. 6.9C, a group of 18 equalizing pulses are keyed-on by a 60 cycle 9-line keying signal. The NUMBER OF EQUALIZING PULSES control adjusts this value, so that the proper number of pulses precede and succeed the keyed-on vertical sync blocs as in (4). In (4) it is noted that these V sync blocs are keyed-on by a 60 cycle 3-line keying signal. The NUMBER OF VERTICAL PULSES control adjusts this value.

The remaining adjustments concern the very important matter of pulse widths (duration) of various waveforms. Methods of pulse width control were described in section 3.3; it now remains to see how these values are measured in practice to assure accuracy of properly shaped waveforms.

The television synchronizing waveform illustrated in Fig. 6.9D(1) is broken down into relative values in the table of Fig. 6.9D(2). From observation of these waveforms and the table, it is obvious that the measuring method must be capable of showing fractional-microsecond time intervals. For example, to measure the leading and trailing edges (slopes) of either the equalizing pulses or horizontal super-sync pulses, a device capable of measuring 0.25 microseconds is necessary. (Super-sync is the term given the amplitude of the sync pulse which extends from the blanking level into the blacker-than-black region.) The slopes of these pulses are critical since, if not correct, some lines would be longer than others in time with disastrous results in the reproduced picture. Similarly, the H front porch is only 1.27 microseconds in time. The maintenance of this value is important to assure sync-pulse uniformity as seen by the sync-selector circuits. Non-uniformity of front porch produces different timing of the triggering action between signals which vary between amount of the immediately preceding white or black picture content. It is obvious then that the cathode-ray oscilloscope is the logical choice for such measurements, and that the amplifiers associated with the scope must be of broad-band characteristic with minimum phase and amplitude distortion.

One popular method used by operators for pulse measurements employs a scope with a triggered sweep speed of as high as 2 microseconds-per-inch so that pulses may be spread out to an appreciable width on the screen. Either built-in or separate marker

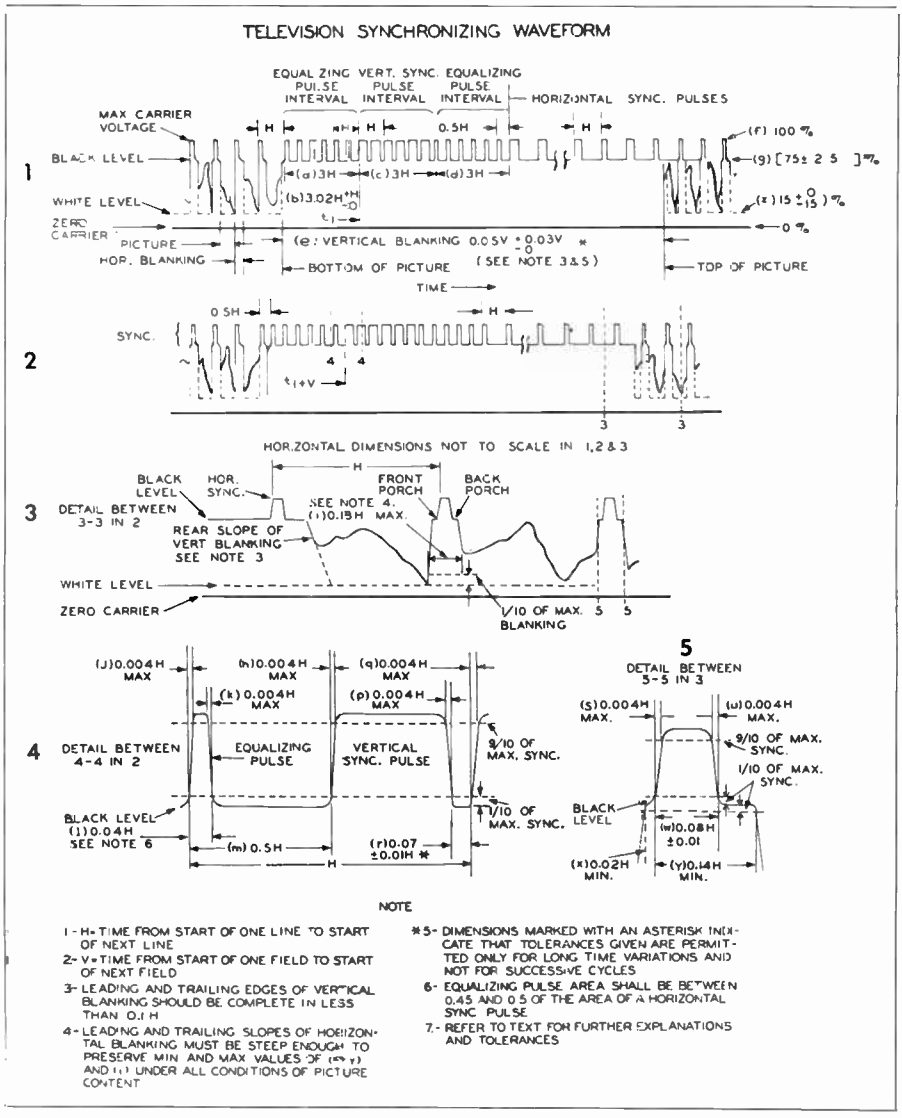

Figure 6.9D. (1).

generators are used with, for example, 1 microsecond time markers. Some stations have scopes which employ a triggered sweep of as high as 0.05 microseconds per inch, with built-in marker generators at as high as 0.1 microsecond time-intervals. Pulse width may then be conveniently measured by superimposing the markers over the pulses displayed on the scope screen. Certain inaccuracies may result from this method, such as uncertainty of exact marker accuracy, and the fact that interpolation must be used where the markers do not happen to occur at the exact start of the pulse under observation. Providing the scope and marker generator are known to be in good order, however, the method is satisfactory.

A scope using triggered sweep allows selection of any sync pulse to trig-

HORIZONTAL COMPONENTS			
Name of Pulse	Freq. in PPS	Duration in Microseconds	Duration at Base H
Horizontal Line Interval (H)	15,750	63.5	1
Horizontal Blanking Interval	15,750	11.43 (max.)	0.18 (max.)
Horizontal Front Porch		1.27	0.02
Horizontal Super-Sync. Bottom Width		5.08	0.08
Horizontal Super-Sync. Width at Top		4.57	0.072
Horizontal Super-Sync. Front Slope		0.25 (max.)	0.004 (max.)
Horizontal Super-Sync. Back Slope		0.25 (max.)	0.004 (max.)
Maximum Slope End of Picture to Start of H Blanking		0.64 (max.)	0.01 (max.)
Maximum Slope End of H Blanking to Start of Picture		0.64 (max.)	0.01 (max.)
VERTICAL COMPONENTS			
Name of Pulse	Freq. in PPS	Duration in Microseconds	Duration at Base H
Vertical Field Interval	60	16,667	262.5
Vertical Blanking	60	833.4 (min.) 1333.3 (max.)	13.1 (min.) 21.0 (max.)
Rising and Falling Slopes of Vertical Blanking Intervals		<6.35	<0.1
Equalizing Pulse Interval	31,500	2.54	0.04
Leading and Trailing Edges of Equalizing Pulse Interval		0.254	0.004
Interval Between Equalizing Pulse and V Sync. Pulse		28.57 (min.) 31.75(max.)	0.45 (min.) 0.5 (max.)
Vertical Sync. Pulse Interval (Total)		190.5	3
Vertical Sync.	31,500	27.3	0.43
Vertical Serrations	31,500	4.44	0.07

Figure 6.9D. (2).

ger the horizontal sweep circuit of the scope, and observation of exact width of pulses or duration of the leading and trailing edges. Some television test scopes used in stations employ a calibrated dial from which the operator may read directly the time display in microseconds. For example, Fig. 6.9E (1) shows a typical pattern obtained from a triggered sweep set to select

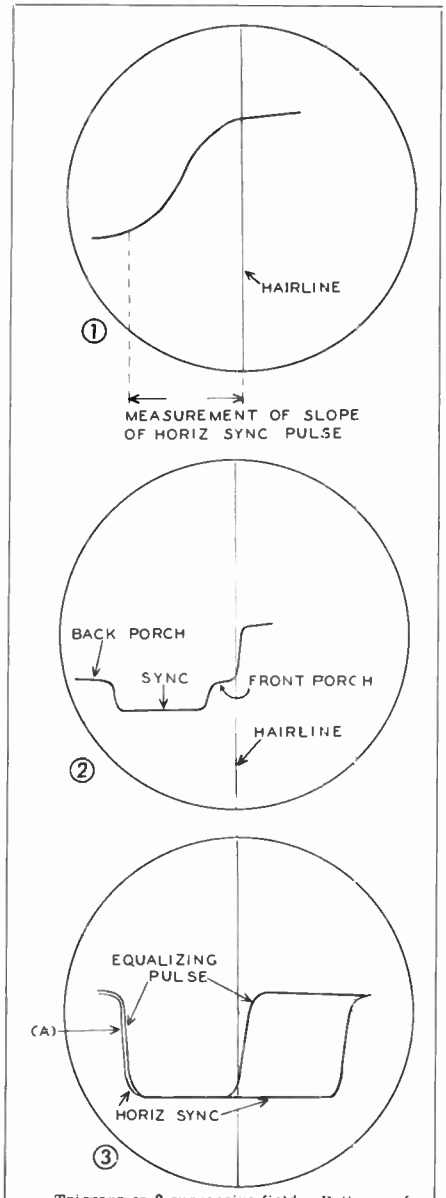

Triggers on 2 successive fields. Patterns of both fields supered. Sweep speed set to display H sync pulse. H sync pulse in one field supered on equalizing of next field. Perfect interlace = exact superimposure at (A).

Figure 6.9E.

the horizontal sync pulse, and spread out on the screen so that the slope of the pulse is conveniently displayed. A hairline in the center of the screen is used to set the top of the slope as indicated in Fig. 6.9E. By turning the calibrated delay dial until the bottom of the slope is centered at the hairline (by shifting the pattern to the right under the hairline), the operator may read from the corresponding marks on the dial (indicating amount of degrees through which the dial was turned) the exact time in fraction of microseconds occurring during this slope. From the table in Fig. 6.9D(2), it is noted that the maximum time duration allowed is 0.25 microseconds, for the front or back slopes of the horizontal sync pulse.

The front porch and back porch of the H blanking-sync signal may similarly be measured as indicated in (2) of Fig. 6.9E. If the leading edge of the blanking pulse is set under the hairline, and the pattern shifted to the right until the leading edge of the sync pulse is centered, the time interval of the front porch is measured. Obviously, any such interval is accurately measured by this means.

The relative areas of the equalizing pulses and H sync pulses are very important during the vertical blanking period. From Figs. 6.9D(1) and 6.9D(2) it is noted that the equalizing pulse is ½ the area of the H sync. Although the FCC specifies *area* in these values, a very close approximation is made in practice by comparing the *width* of the respective pulses. Scopes of the type employing pulse measurements (such as the Du Mont Type 280 widely used in stations) may be triggered on 2 successive fields with the patterns of both fields superimposed. In (3) of Fig. 6.9E, the scope is triggered on 2 successive fields, with the sweep speed adjusted to display the H sync pulse. The H sync pulse of one field is supered on an equalizing pulse of the next field. For perfect interlace, the two pulses would be exactly superimposed at point (A) in the illustration. A slight separation is shown here for clarity. Obviously, the widths may be measured as described above.

A method which seems to be rapidly

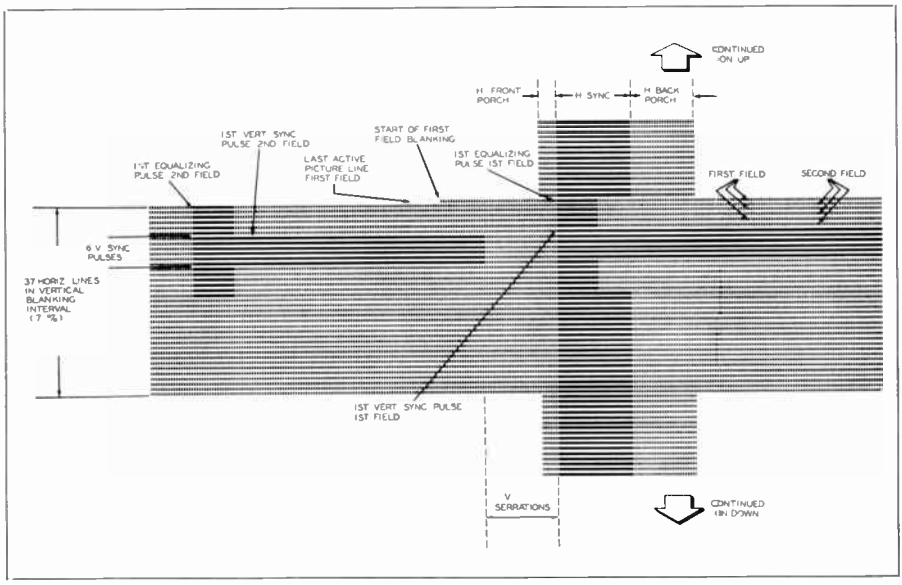

Figure 6.9F. (1) Fundamentals of Pulse-Cross, when producted by half-speed (approx.). Sweeping of the monitor Kinescope. (Method described in Chopter 8.)

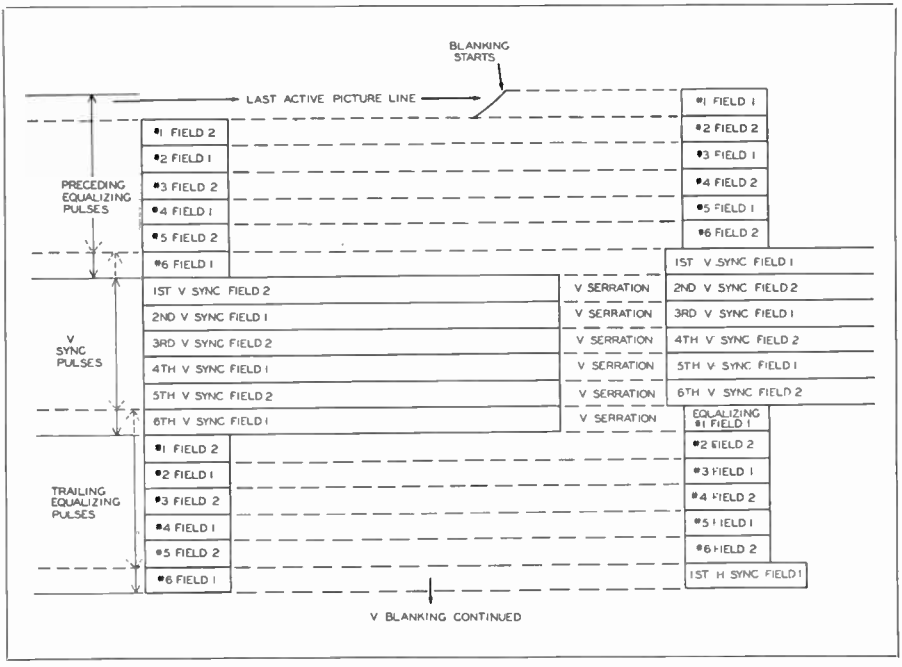

Figure 6.9F. (2) Exponded view of o portion of the pulse-cross drown in Figure 6.9F(1) to show sequence of pulses displayed on kinescope.

replacing the above procedure for routine or emergency checks of the sync generator, especially in stations not employing elaborate scopes, is known as the Pulse-Cross method. The idea is to cause the horizontal and vertical blanking intervals to be displayed upon a regular picture tube such as a master monitor in the control room. For example: If the H scanning speed in the monitor is adjusted to one-half the normal speed, two pictures appear side-by-side on the monitor. Appearing in the center will be the dark vertical region of the H blanking interval between the lines. Adjusting the contrast and brightness controls enables the operator to observe the H front porch which is dark gray, the super-sync region which is black, and the back porch which is again dark gray. In other words the H blanking interval is centered in the trace portion of the scanning period instead of in the retrace portions which, with normal sweep, occur at the extreme edges of the picture. Similarly, if the vertical sweep control of the monitor is adjusted to one-half the normal sweep, two pictures appear on top of each other, with the V blanking interval displayed horizontally across the picture tube between the two pictures.

Therefore if the monitor tube sweep frequencies are reduced to approximately one-half normal rate in both horizontal and vertical directions, the triggering of the lines are displaced in the normal picture area of the kinescope. By applying the composite signals from a distribution amplifier to the regular input terminals of such a modified monitor, and expanding the sweep to cover a large area of the screen, a pulse-cross pattern is displayed as illustrated basically in Fig. 6.9F(1).** Bringing up the brightness level on the tube aids in actual counting of the lines and pulses observed.

Interpretation of this pattern aids immeasurably in visualizing the relative placement and timing of all the control pulses. Starting at the extreme left of the drawing, it is noted that the vertical blanking interval shown here covers approximately 37 lines. It should be recalled that this interval is equivalent to from 13 to 21 horizontal lines per field, or 26 to 42 lines per frame as displayed on this raster. This means that a range of 5% to 8% blanking is allowed by the FCC in the Standard TV Waveform.

5% blanking = 26 lines per frame.
6% blanking = 31 lines per frame.
7% blanking = 37 lines per frame.
8% blanking = 42 lines per frame.

The average V blanking interval used by stations in practice is 7% and this value (37 lines blanking) is illustrated in the drawing.

Next (to the right) is shown the first equalizing pulse of the second field.* REMEMBER AT THIS POINT THAT SINCE THE ENTIRE FRAME IS DISPLAYED, INTERLACING OF THE SWEEPS IS SHOWN. What is important to point out here is that, following the equalizing pulses on down immediately below this "first equalizing pulse, second field," we may label them as follows: second equalizing pulse, first field; third equalizing pulse, second field; fourth equalizing pulse, first field; fifth equalizing pulse, second field; and sixth equalizing pulse, first field.

Observe Fig. 6.9F(2) for clarity of than half-sweeping which would show only three equalizing pulses. Details of producing the pulse-cross are given under MAINTENANCE, Chapter 8, in which several most satisfactory methods are outlined.

**In actual practice, due to difficulties in half-sweeping a master monitor kinescope, time-delay circuits are employed to shift the blanking intervals into the normal picture areas of the tube. Fig. 6.9F(1) and (2) are based upon this time-delay method, rather

*Arbitrarily named. Could be either first or second field at this position on raster.

this sequence shown in the pulse-cross pattern. Note that following the sixth equalizing pulse, first field, along the same line to the right appears the first vertical sync pulse for field 1. At the next line down to the left is the first V sync pulse for field 2, and along this same line to the right (separated by the V serration interval) is the second V sync pulse for field 2. This sequence is followed on through vertical serrated sync interval to the following first (trailing) equalizing pulse of field 1. The trailing equalizing pulse interlaced sequence is then followed to the No. 6 (last) equalizing pulse of field 1, shown at bottom left. It is noted that following this line along to the right the last equalizing pulse is succeeded by the 1st H sync pulse of field 1. THEREFORE THE SPACING BETWEEN SUCCESSIVE PULSES IS MEASURED HORIZONTALLY ALONG THE PATTERN. Fix the information shown by the pulse-cross in your mind with that shown in Fig. 6.9G for a clear perception of the interlaced scan and control functions of the sync generator.

Going back to Fig. 6.9F(1), note the display of the H front porch, H sync, and H back porch. For a sync generator that is precisely adjusted, the following relationships occur and may be observed and measured by the pulse-cross pattern:

1. Six equalizing pulses preceding V sync and in line with H sync. Also six equalizing pulses preceding H sync which are at half-line position. The relative width of the equalizing pulses and horizontal sync pulses may be most conveniently measured at the cross occurring at the right in the illustration. The width of the equalizing pulses should be 0.45 to 0.5 of the sync interval. (See note No. 6. Fig. 6.9D(1).) Remember that although the FCC stipulates this measurement in area, the horizontal display of pulse width is accurate in practice.
2. Six V sync pulses, 0.43H duration, with serrations at 0.07H.
3. Six equalizing pulses trailing the V sync pulses and in line with H sync. Also six trailing equalizing pulses at half-line position. Same width as those preceding V sync pulses.

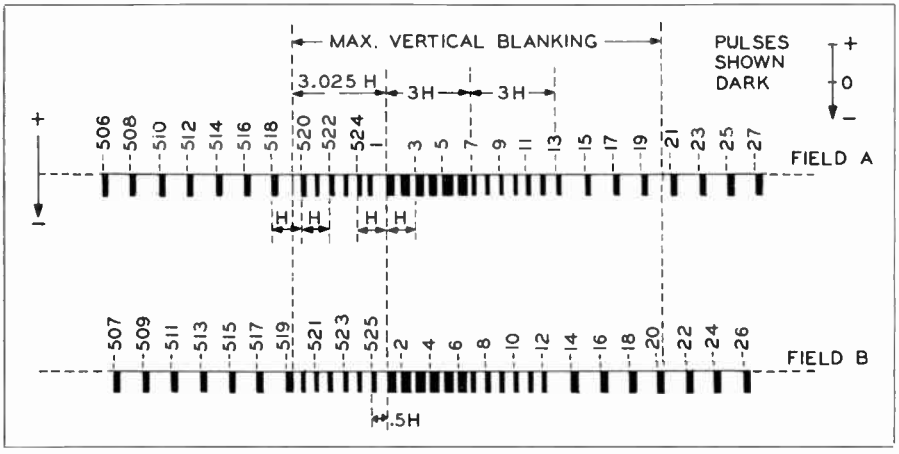

Figure 6.9G. Illustrating the vertical blanking interval with preceding and succeeding lines in both "even" and "odd" fields. The maximum vertical blanking interval of 21 lines per field is shown here. Note that "Field A" is even numbered lines up to V sync, at which time the even numbered lines are started to be scanned. Thus the illustration depicts the last few lines of each field, and the first few lines of the succeeding field. Note carefully the half-line difference at the start of the leading equalizing pulses and at the end of the trailing equalizing pulses. Note that the polarity of the control pulses is negative, as is standard for studio-output amplifiers, and as would be applied to the monitor for pulse-cross patterns.

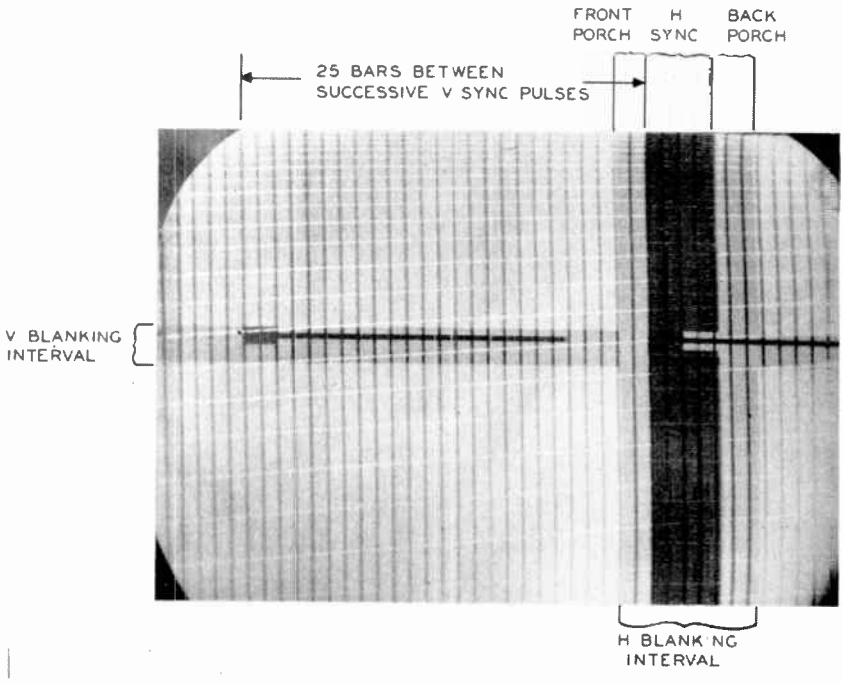

Figure 6.9H. Photo of pulse-cross with vertical bars from grating generator superimposed.

4. After the last trailing equalizing pulse, normal H sync pulses occur and blanking prevails for remainder of vertical blanking time.
5. Front porch of H blanking. 0.02H duration.
6. H sync. 0.08H duration.
7. Horizontal back porch.

An exact method of calibration of the kinescope screen for more accurate measurements of pulse widths, first used at station WPIX in New York, incorporates the use of a Grating Generator. (Section 6.1.) Since the grating generator is triggered from the sync generator, the linearity bars may be superimposed upon the pulse cross and all pulse widths measured in terms of the base H. In this method the composite signal from a film or camera chain distribution amplifier is fed to the monitoring kinescope along with signals from the grating generator. Fig. 6.9H illustrates the resulting pattern with only vertical bars supered on the pulse-cross. Since these bars are produced with a separation which is a specific percentage of H, calibration of the kinescope becomes automatic. For example, in the photo of Fig. 6.9H may be counted 25 bars between two successive vertical serrated pulses. From the table in Fig. 6.9D(2) we observe that a vertical sync pulse is 0.43H, and the serration is 0.07H. Therefore the standard separation between V pulses (from the leading edge of one pulse to the leading edge of the successive pulse) is 0.43 + 0.07, or 0.5H. Since 25 bars, triggered from the sync generator, are placed within this interval of 0.5H, the distance between bars is 0.5H × 1/25, or 0.02H. Since calibration in terms of H is very convenient for measurement, this procedure allows a very accurate adjustment of pulse duration in the sync generator. In this specific example, the bars have been displayed in terms of 0.02H. Therefore the width of equalizing pulses, V sync pulses, H front and back porches, and H sync may be correctly adjusted. If the grat-

ing generator is adjusted to display 50 bars within this interval, the distance between bars is 0.5H × 1/50, or .01H.

When the sync generator is to be "slaved" to the remote control generator prior to a remote program in which cut backs to the studio occur or supers are necessary over the remote signal, the most popular method of testing is the *cross-sweep* on the monitor. This means that the monitor sweeps are driven in the normal manner from the driving pulses of the local sync generator, while the grid of the monitor tube is modulated by the remote signal control pulses. This causes the V and H sync pulses to move across the face of the kinescope. The sync-lock may then be adjusted so that the V and H sync intervals of local sync corresponds to those of the remote sync generator. The methods of adjustment vary widely in practice; many stations having built up their own circuits for remote-local sync phasing. The RCA "Genlock" is automatic in this respect in that no precise phasing controls are necessary. In this system the H frequency control circuit puts out a variable DC to the reactance tube of the local generator, an amount necessary to correct the local H pulses automatically with those of the remote. The field-frequency control circuit puts out a signal to the 7:1 counter circuit in the local sync generator which automatically controls the field frequency with that of remote signals.

6.10 Operating the Sound

The television sound technician faces just as wide a variance of obstacles to be overcome in the normal course of a local production as does the video technician. Just as in AM and FM stations, the TV station audio facilities must accommodate acoustical conditions that are peculiar to that specific installation; no two studios in the world being acoustically alike. In television this condition is aggravated by the fact that for any particular studio, the acoustical conditions will change with each program that uses different props and different effective areas of the studio. The TV sound engineer can't get in a rut; the daily operations schedule presents a continuous challenge in operational problems. It is imperative that he be familiar with the fundamental properties of microphones as they affect operating techniques. This subject is adequately covered in existing literature and will not be completely reviewed here.[1-2]

Fig. 6.10A illustrates the basic types of microphones used in television stations. Such mikes may be fundamentally catalogued in two classes; mikes which are non-directional in sound pickup, and those which, by design, are directional to sound pickup. The Western Electric mike of (1) is directional in a cardioid pattern toward the face; in (2) is the popular "Saltshaker" Western Electric mike, non-directional in sound pickup, and used in such applications as announce booths where the TV announcer makes his station breaks and commercial plugs which may be accompanied by slides rather than a view of the announcer himself. In (3) is the RCA 77-D Polydirectional mike, very commonly used on microphone booms where almost any pattern of response may be called for. This mike is a variable pattern instrument (see Fig. 6.10B), often used in the uni-directional position which is similar to the Western Electric Cardioid pattern. This pattern aids in minimizing unwanted sound pickup, one of the major problems in the TV show. A type of microphone often used when the mike appears in the picture, as a night-club scene or announcer pickup, is shown in (4) of Fig. 6.10A. This is a small pressure-type mike, non-directional in sound pickup, designed to be as unobtrusive

---

[1]Oliver Read: "The Recording and Reproduction of Sound." Second edition. Howard W. Sams, Publisher, Indianapolis.

[2]Harold E. Ennes: "Broadcast Operators Handbook," Second Edition, John F. Rider, Publisher, New York.

Figure 6.10A. (1) (2) Western Electric Microphones. In (1) is shown the directional (cardioid pattern) mike. In (2) is the non-directional "saltshaker" mike often used in announce booths. Courtesy Western Electric.

as possible so as not to "hide" the announcer or singer. Any non-directional microphone may only be used when the ratio of wanted-to-unwanted sound is sufficiently high.

Fig. 6.10B illustrates the versatility of the RCA 77-D type mike. (The Western Electric 639A and 639B are also variable-pattern microphones.*) In (1) of this illustration is shown the method of selecting the desired pattern of response. This is done by means of a slotted shaft brought out flush with the rear of the windscreen as shown in the photo. The plate is marked with a "U" (for Uni-directional), "N" (for Non-directional), and "B" (for Bi-directional). The resulting response patterns are shown on the illustration, and contain pertinent information concerning operating techniques. Compare, for example, the Uni-directional and Bi-directional patterns. Note that at 90° on the "U" pattern, the average response is down only about 5db in reference to zero-degrees axis. Now observe the "B" pattern at 90°. It is seen that the 2000 cycle response is down about 12.5db, and the 500 cycle response is down about 15db. This illustrates a feature common when comparing any uni-directional pattern with any bi-directional pattern; the uni-directional characteristic being much broader in coverage in front of the mike than is the case with a bi-directional response. Thus the uni-directional response is used to cover a relatively large area in front of the mike as well as to reduce unwanted sound pickup at the rear. The reader should also note that in this in-

*pp 34-35 and 327-328; H. Ennes: "Broadcast Operators Handbook." second edition, John F. Rider, Publisher, New York, 1952.

Figure 6.10A. (3) RCA Type 77-D, Variable-pattern microphone.

strument set on bi-directional response, the pickup area at the "rear" of the mike is not as great as that to the front. The "rear" is the side containing the slotted shaft (Fig. 6.10B(1)).

Another important feature of response pickup areas is that relating to the extremely high-frequencies so necessary for good reproduction of music. Observing the non-directional pattern of the 77-D, it is noted that the mike should still be "faced" toward any sound-source requiring good registration of high frequencies. The 9000 cycle response curve (slotted line) is down toward the rear of the mike even though set in the "N" position. This is a characteristic of any variable-pattern instrument due to the design features. The reader is encouraged to study the references given above to gain a comprehensive knowledge of mike structure.

This points up another common error chargeable to newcomers concerned with sound pickups. Many of them are under the impression that any "non-directional" type of mike may be made directional by pointing the instrument toward the sound, with the "back" toward unwanted sound areas. Fig. 6.10C illustrates the fallacy of this conception. Regardless of mike case orientation, it is just as "non-directional" to all sounds except the high frequencies above about 1500 cycles. These higher frequencies are deflected by the housing sufficiently to become attenuated toward the rear of the microphone. To achieve true directivity, the mike must be "designed that way."

It is also observed from Fig. 6.10B (2) that the 77-D contains an adjustment of frequency response for "voice"

Figure 6.10A. (4) RCA "Starmaker" Microphone. Courtesy RCA.

Figure 6.10B. (1) RCA 77-D Microphone showing adjustment of "U," "N," and "B" response patterns.

or "music" ranges. The slotted shaft on the bottom of the mike varies this range of response as shown in the illustration. Two "voice" positions are available, "V1" and "V2." The voice range "V1" is often used on mike booms even for music, especially if a large amount of low-frequency "boom" exists due to studio dimensions and acoustical conditions.

The method of aural pickup for TV shows may be classed into three general divisions as follows:

(1) Shows in which all mikes may be visible to the viewer. Such programs as quiz shows, panel discussions, some variety shows, musical productions, formal interviews, news programs, sporting events, night clubs, etc., fall into this category.

(2) Shows where some mikes may be visible while others must be kept out of camera range. Some variety programs are a good example of this technique, such as partly musical and partly dramatic.

(3) Productions in which all mikes must be kept out of camera range. The most notable example here is the dramatic program in which the appearance of a microphone would jeopardize the atmosphere or mood of the show. Such technique is also used in interviews where an air of informality is to be preserved. Actually, any of the above mentioned programs might call for this method.

Programs where the microphones may appear in the scene are handled the same as in the usual sound broad-

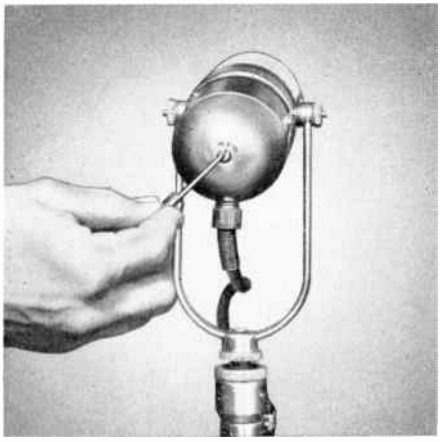

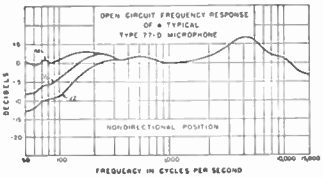

Figure 6.10B. (2) RCA 77-D Microphone showing adjustment and curves of "M," "V1," and "V2" frequency response.

cast studio, with the one important difference that the mike must not obstruct the face of the persons on the show. The new mikes such as illustrated in Fig. 6.10A (4) find wide application due to this necessity. When the larger mikes are used, they are placed below or above the face. In panel discussion programs, the mikes are low and sometimes hidden by a projection on top of the desk. In many cases this technique is a decided improvement over the practice found in the great majority of AM and FM stations where the announcers and participants crowd directly into the face of the mike. This distance should never be less than two feet for faithful reproduction of voice. Many aural broadcast announcers, in the habit of mike mugging, take a bit of persuading in the transition to TV practice.

Programs in which some or all of the microphones must be kept off the screens call for the mike-boom and boom operator. The most popular microphones used for this application are the RCA 77-D, and the Western Electric 639A or 639B. Since the greater distance of mike to sound source emphasizes unwanted sound pickup, the uni-directional pattern of sound is highly desirable from the boom. The boom arm must be high enough to be out of the picture, and is usually slanted at about a 45° angle to point toward the principal sound area.

The greatest transition in practice which the aural broadcast sound technician must make in TV practice is the art of sound perspective. This term describes the technique of fitting the apparent distance of sound into the accompanying picture as it appears on the screen. As an example, assume that the camera is on a close-up of a man and woman seated on a davenport, with the woman talking earnestly, perhaps pleadingly to the man. The boy friend, or husband as the case may be, is about to "take a powder" against the earnest pleas of the feminine partner. The man gets up from the davenport and walks slowly across stage to the door, with the woman pleading on, becoming hysteri-

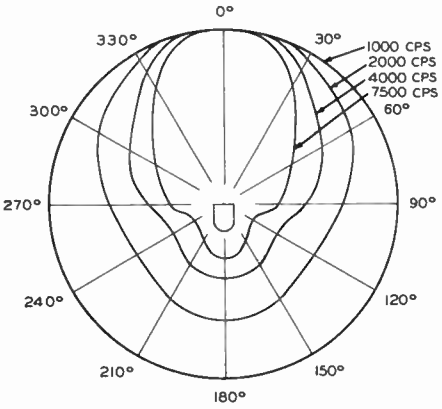

Figure 6.10C. Pattern of non-directional mike when attempting directivity by case orientation. It is noted that the mike may be made "directional" in this manner only at higher frequencies. At the frequencies below 2000 cycles, containing most of the peak energies of sound waves, the mike is just as non-directional in any position. Pattern of Electro-Voice Model 605 non-directional mike. Courtesy Electro-Voice.

cal in her routine. The camera follows the man to the door. Since the viewer is concerned at this time only with the man, it is natural that he expects the woman's voice to be left behind as the male walks slowly out of her presence. In this case, even though the man is not saying a word, the mike boom operator would do well to follow his movements so that the apparent distance to the voice becomes greater in direct ratio to his movement. But at this time comes one of the problems not apparent on the surface. In monaural reproduction of sound, as contrasted to our normal bi-naural hearing in nature, the apparent distance becomes increasingly greater as the mike is moved away, above and beyond what we experience if we were there "in person." Actually it is found that the mike need not follow the man in the above example all the way across the room. If this were done, in many instances the apparent distance would be far greater than one room-length. All of which points up that rehearsals with sound as well as sight must be thorough and completely anticipated on the air. No rules may be laid down since there is no such thing as a "standard studio" acoustically. The desired effect can only be achieved through careful rehearsals. This characteristic is discussed here to acquaint the reader with the phenomena so that, in the all too usual occurrence of insufficient rehearsal time, he will be prepared to emphasize the importance of his ear to the success of the show.

Another very common problem in television sound is the transition from a closeup of a person sitting in a chair, then getting up, at which time the area of view widens to include other details. If the person is talking during this transition, the mike boom operator must be warned in time to raise his mike before it comes into view. Then what happens to the sound? Any sudden change in distance of the mike is very noticeable to the listener due to the phenomena mentioned above. Actually, then, this action must be anticipated far enough ahead of time so that the boom is very gradually raised just before the cue to widen the area of view is given. Due to the precision which with this sight-sound relationship must be exercised, many operators tie an inconspicuous length of string onto the mike so that it may be noticed before the mike appears in the picture, by carefully watching for it in the monitor.

Shadows cast by the mike and boom are an ever present danger in TV productions. This calls for close cooperation with the lighting engineers. Such shadows may be eliminated by sufficient light from the angle on the spot where the shadow occurs, which "washes out" the shadow.

In instances where the mike must be quite close to a camera, it is often necessary to turn off the camera blower to prevent the noise from being picked up. Such occurrences usually last only a small period of time, and in most of the newer cameras the blower may be off over a considerable length of time unless the ambient temperature is usually high.

On un-rehearsed shows where the continuity of action is uncertain, the mike boom operator often orients the face of the mike practically parallel to the floor for wider coverage. Quality of sound is somewhat inferior in this procedure but is often necessary for adequate pickup.

The sound mixer control console for television does not differ from that found in the AM or FM station. Fig. 6.10D illustrates a typical studio console-type audio control board. Located on the control panel are the mike keys, attenuators, turntable keys and attenuators, audio attenuators for the film chain, monitoring and cue-feeding switches and attenuators. The VU meter indicates the audio level output from the control room, 100 on the dial corresponding to 100% modulation of the FM aural transmitter at the audio-video transmitter installation. The operator should be familiar with the

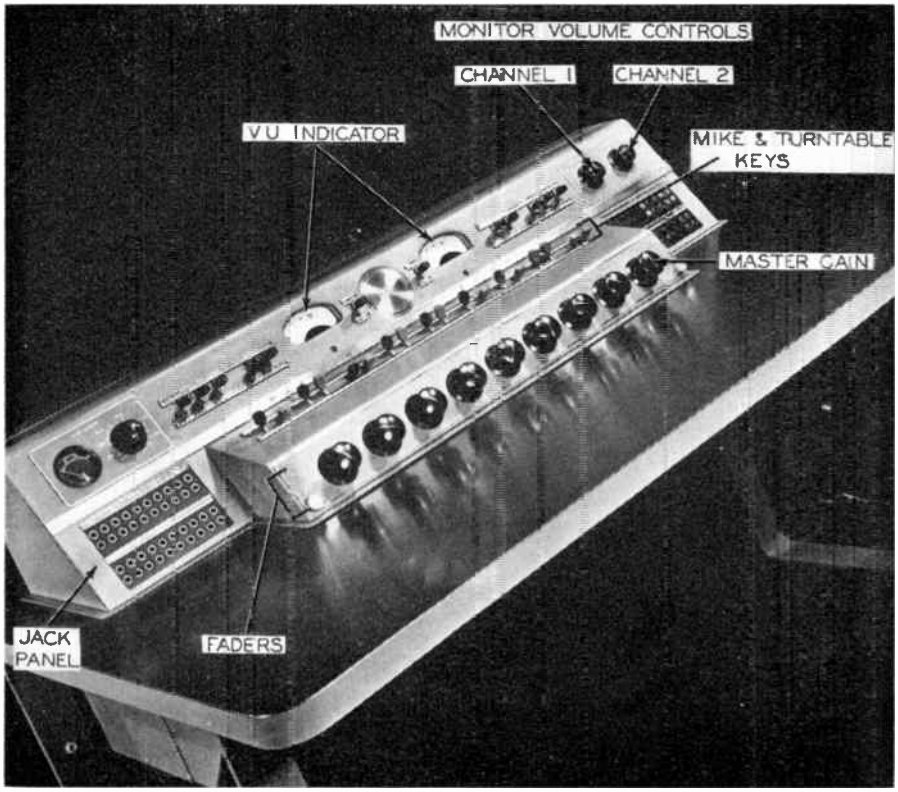

Figure 6.10D. Western Electric Type 25B Audio Control Console. Courtesy Western Electric.

control and functional circuits of his board for efficient operation.*

The record and transcription turntables are often placed at the side of the control panel and operated by the sound engineer responsible for the audio mixing. On large productions involving a number of microphones, he is usually assisted by a turntable operator so that his attention may be concentrated on the control of the mikes. Turntables for broadcast use incorporate filter selectors to accommodate the wide variety of recordings and transcriptions, cueing facilities, a fader control external to that on the mixer console, and an off-on switch for the motor. Fig. 6.10E shows a typical broadcast-type turntable with these controls on the cabinet panel. The recording is "cued-in" by throwing the central switch to the "CUE" position. When the stylus reaches the sound on the record, the signal is heard either in headphones worn by the operator or on an external loudspeaker cueing system. He then backs the record to the start of the sound and turns the motor off. Immediately prior to broadcast, he starts the turntable motor running while holding the record by hand to prevent its turning, throws the center switch to "BROADCAST" position, and upon the direct cue, lets the record go. This procedure calls for exact cueing of the record so that the sound starts immediately upon release of the record with the revolving turntable. The practice is necessary since an almost com-

*Thoroughly described by the author in "Broadcast Operators Handbook," Second Edition.

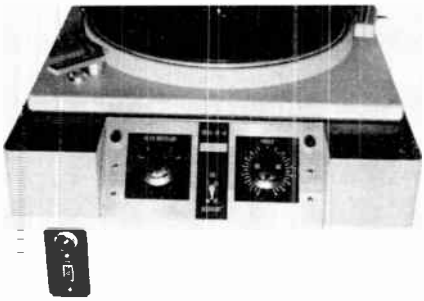

Figure 6.10E. Typical Broadcast-Type turntable. Courtesy Gates Radio Company.

plete revolution of the turntable is necessary to come up to proper speed. Sound from the record would "wow" if the turntable were simply started revolving at the first sound groove.

Operational cues with which the sound engineers must be familiar are as follows:

OPEN MIKE 1 (or 2, etc.). Order to the sound control operator at the control board to open the fader for that mike, or, if the fader is open, to close the corresponding mike switch.

STANDBY WITH SOUND. Alert cue to audio operator or turntable operator to start the turntable revolving while holding the record to prevent its turning. Fader should be open in readiness for sound.

HIT THE SOUND. Direct cue to turntable operator to release record.

FADE IN SOUND. Sometimes termed "sneak in sound." The fader is closed upon release of the record and gradually raised to desired level as instructed by director.

CUT SOUND. Abrupt cut of sound, best accomplished by throwing the mike switch rather than using the fader.

FADE OUT SOUND. Might be termed "slow fade out" or "fast fade out." Accomplished by use of the proper fader control.

SOUND DOWN. Cue to operate fader to obtain lower sound level, but to be maintained under the principle sound or simply to accompany the picture at a lower audio level.

SOUND UP. Operate fader to obtain higher level of audio. Note: some directors do not watch the VU meter and may order the sound up when it is already peaking at 100 on the meter. This is simply a lack of proper rehearsal time, and the operator should realize that he cannot accomplish the desired result by overmodulating the transmitter. Indeed most installations include a limiter amplifier at the transmitter to avoid such overmodulation. If the period of time is to be very short, the operator may "up" the sound until the meter hits the pin. If it is to be extended over a longer period of time, and the director is temperamental, raise the monitor volume! The chief engineer will back you up if there is any question. The technical department must be required to work only within the technical limitations of the system.

CROSS FADE TO 2 (or 1, 3, etc.). Cue to audio operator to fade in on mike 2 while the other mike is faded out.

SEGUE. (Pronounced Seg-way). Another record follows immediately at the conclusion of the record being broadcast.

6.11 *Typical Pre-Program Routine*

Space does not permit a complete "typical day in the life of a television operator." It is well, however, at this time to review a typical routine of setup procedure as described in the previous sections of this chapter. Any points not clear in this section call for a review by the reader of the pertinent sections.

The sync generator is the first equipment to be turned on. Some installations use a master switch which turns on the sync generators and all filaments in the rest of the equipment. After the sync generators have been warmed up several minutes, the countdown circuits are checked by the scope on the sync panel. The H and V driving signals for the camera chain are checked by an ex-

ternal oscilloscope for proper operation.

Plate voltages may now be applied to the camera control units, mixer-switcher units, intermediate and line amplifiers, picture and waveform monitors. All audio equipment is turned on and sound checked for level and quality. The studio cameras high voltage is left off, and the lens are tightly capped.

Linearity bars are applied to the master monitor, and sweep circuits adjusted for proper linearity and aspect ratio. The Monoscope camera, when used, is then applied to the master monitor and adjusted for proper linearity of sweeps against the properly adjusted master monitor.

The driving signals are now observed on the camera control unit waveform oscilloscope, and if found properly operating, the high voltage may be applied to the cameras in the studio. The lens is left capped. Beam current is turned on only after ascertaining that the sweep circuits in the camera are properly operating from the triggering pulses of the H and V driving signals. If sweep is present at the deflection yoke of the camera, it is safe to turn up the beam current.

Electrical focus is now achieved by the "dynode spot" procedure. The lens may now be uncapped and focused upon a test pattern properly illuminated and leveled with the camera. The camera operator and camera control unit operator coordinate in electrical adjustments of the camera chain. By watching the master monitor which is monitoring the signal at the output of the line amplifier, linearity controls are adjusted and proper aspect ratio in camera sweeps is obtained. The image orthicon target is slightly over-scanned during alignment, resulting in a slightly smaller-than-normal picture on the monitor picture tubes.

Optimum shading is now obtained for each camera by noting the level across the top of the waveforms displayed on the control unit monitors.

Next is the critical checks for proper scanning, interlacing, etc., of the sweep circuits. Underscan the camera vertically for a very short period of time. This results in the picture on the monitor tube being spread out vertically so that the center of the picture is expanded to an amount sufficient to observe the lines in the picture. Proper interlacing results in evenly spaced lines. If a slow crawl and intermingling of lines is observed, the interlace is not correct and the sync generator must be checked. Bring V scan back to normal so that the edges of the picture fall into view on the master monitor. H and V centering of sweeps in the camera is best adjusted by overscanning so that a small image on the monitor is obtained, and the centering controls adjusted to place the frame of the picture in the center of the monitor screen.

Final checks may now be made on all control pulses by the calibrated scope method or pulse-cross. Blanking signals must be of the proper width with accurate front and back porches. If faulty interlace was discovered in the above procedure, the driving signals must be re-checked for proper amplitude, frequency and duration.

The film chain must be checked for video and audio. The iconoscope keystone correction circuit is adjusted by overscanning the mosaic, resulting in a small image on the monitor. The keystone circuit is then adjusted so that the picture is the same width at bottom and top. The scan is then returned to normal.

Video gain and pedestal controls are given their final check for proper picture contrast. Correct amount of setup is adjusted at each camera control unit, and checked at the final line output amplifier. Overall audio and video continuity and levels are then checked with master control or transmitter.

In turning studio equipment off, the sequence of power functions are just reversed from the warmup period. The camera beam current is turned off first. When the beam signals completely disappear from the monitors, the sweep circuits may be turned off. All camera lens are capped.

CHAPTER

7

Technical Production of Studio Shows

It would be highly desirable for every neophyte to obtain permission to roam the studios and control rooms during the rehearsals or broadcasts of TV shows. That this is not possible is not due to an iron curtain deliberately dropped over a station's activities. It is literally impossible to conduct every interested person into the sanctuary of a live pickup area. The anthill of activity which occurs in such areas precludes all but the presence of necessary personnel and perhaps a privileged few. It will be the purpose of this chapter to reveal a necessarily limited picture of the activities that take place during a typical rehearsal and broadcast. The experience will be limited because no two shows, even in the same studio with similar setup equipment, will present the same problems that call for the same solutions.

When your guide first ushers you into the control room, you are struck full in the face with what appears to be utter confusion. There is no clean cut sound in the monitor speaker, but several different and unrelated programs seem to be floating around the room. You glance around at the picture monitors and again everything is confusion. You note a string of picture tubes side-by-side, every picture different. To add to your discomfiture, the room is so active with the criss-crossing of busy personnel that try as you may to be inconspicuous, it seems you are always in the wrong place at the wrong time. And you realize first-hand why visitors are severely limited in number, and usually confined to a "visitors area." (Fig. 7.1.)

"We are getting ready for the camera and sound run-throughs," your guide explains. "The *dry run* and preliminary camera blocking* were run through this morning. This rehearsal will have few interruptions, only at the very rough spots."

You notice earnest conversation taking place between the camera control unit operators and the cameramen through their intercoms. Some of the pictures, mostly of the confused activity in the studio, are not very good. Your guide observes where your interest has been concentrated, and he leads you over directly behind the video position.

"The camera chains are undergoing their final alignment procedures," he explains. "These operators always appear at least one hour before the camera run-through rehearsals begin. The TD is acquainted with the lighting and scenic content required, since he sat-in on the dry run this morning. We generally allow 30 to 45 minutes for camera chain alignment."

You note that the picture on the camera control unit with a large numeral "2" is particularly bad. In addition, it is tilting to one side as the operator moves his ORTH FOCUS control. The TD who is watching the procedure presses a button marked "CAM 2" and says "Start your alignment over

*Dry run and camera blocking is preliminary to the "run-through" rehearsal. Scenic contact and lighting are determined, as well as camera angles, stage "business," etc.

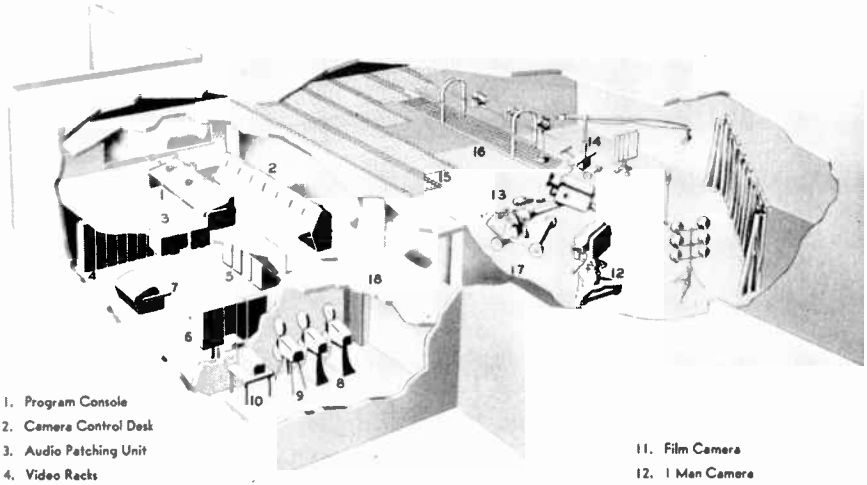

Figure 7.1. Appearance of studio, studio control, master control and film room without the confusion of personnel, audience or visitors. Courtesy G. E.

from scratch. Cap the lens and use the ALIGN REVERSE switch."

"Let's go out and watch," your guide says obligingly. You follow him through the door from the control room, squeezing past incoming traffic. Again you feel anything but inconspicuous.

Camera No. 2 operator has his right side door down, and is throwing a switch marked ALIGN REVERSE (Fig. 7.2). "Sometimes it is necessary to reverse the alignment current to obtain proper beam alignment," your guide says. "While he has the door open, you may also observe the blower switch which turns the blower motor on or off, and the cable voltage switch which allows for differing voltage drops depending upon cable length. Also note the method of engagement of the focusing knob with the gear that slides the orthicon and yoke assembly on tracks behind the lens."

The camera operator now has his lens capped, and is juggling the controls on the back as well as his viewfinder controls. He uncaps the lens and points it to a 18" x 24" test-pattern card. He

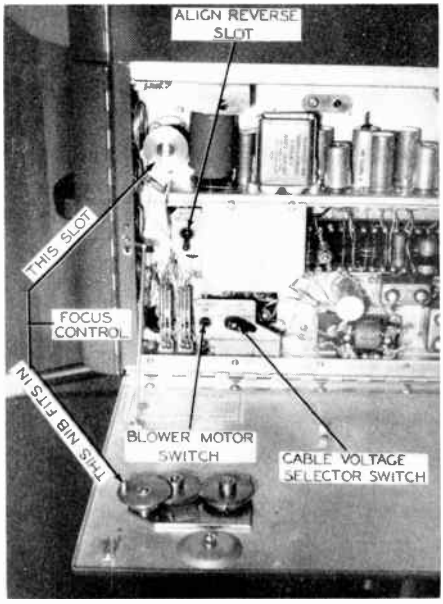

Figure 7.2.

turns the H LINEARITY control on the back of the camera entirely through its normal range and seems dissatisfied. As he opens the left hand door, you move around to take a peek. He is adjusting the "H LIN" control on that side of the camera (Fig. 7.3).

"If the control on the back of the camera is insufficient to correct horizontal linearity," your guide informs you, "this control on the left side of the pickup head is readjusted for optimum over-all results. The rear control then normally takes care of any correction needed, since the damper stage is notably more changeable in this respect than the driver."

You follow with your eye the camera cable as it leaves the camera. Those cables associated with movable dolly cameras are wound up on reels along one side of the studio, with the other end plugged into a receptacle in the baseboard. In some cases the cables run up to the overhead gridworks as in Fig. 7.1. In spite of the myriad of activity no one seems concerned with cables spread all over the floor, and you make a mental note not to become entangled in one. Cables run to the movable dollies upon which lighting fixtures are mounted, as well as to the cameras.

Stage hands are moving these floor lights into position, and making final arrangements of backdrops and props. Other cameramen seem to have completed their preliminary alignment and have their lens capped, awaiting start of the rehearsal. Several mike booms are to be used, and you note one corner of the setting to be a "night club" scene complete with orchestra. Portable hard "flats" are positioned behind the orchestra to provide proper acoustics for the musical selections (Fig. 7.4).

"This production includes everything from a modern night-club scene to the horse and buggy days." your guide is saying. "Look over here in this corner of the studio." You look, and there is an old buggy "with fringe" yet, and you immediately wonder about the horse! Your guide expected you to. "Actually no horse will be used." he smiles at you.

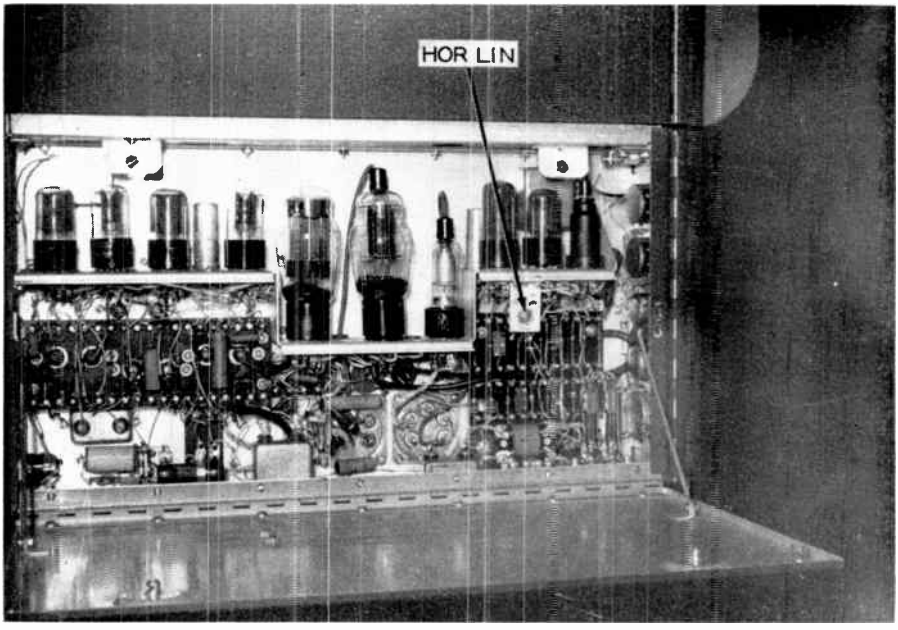

Figure 7.3.

Figure 7.4. Setup of orchestra and tables in night-club scene. Note portable hard "flats" placed behind orchestra for proper acoustical treatment in musical transmission. Courtesy WLW-T.

"The camera will get a loose two-shot of the man and his girl friend in the seat of the surry, and the screen you see behind this prop will have moving scenery by back-projection. In this particular show, the sound of the wheels and the horses hoofs must be set to music, so we must provide a 'live' sound effect under control of a sound-effects technician. We go back to the old 'pictureless' method of regular sound broadcasting for this effect, which you see over here" (Fig. 7.5). "Of course this does not appear in the picture, but the sound is picked up on this mike and mixed in with the orchestral accompaniment at the sound control board in the control room."

Very close to this ingenious contraption which injects proper sound atmosphere to the show you note a rather complex appearing console with four turntables and pickup arms (Fig. 7.6). "Many sound effects are obtained from records," the guide says. "This Special sound-effects console has provisions for four records which may be 'mixed' simultaneously if desired, and spotted so accurately on any individual record that an exact groove may be found without much delay. The sound may be fed to the loudspeaker and picked up on the mike, in which case the studio

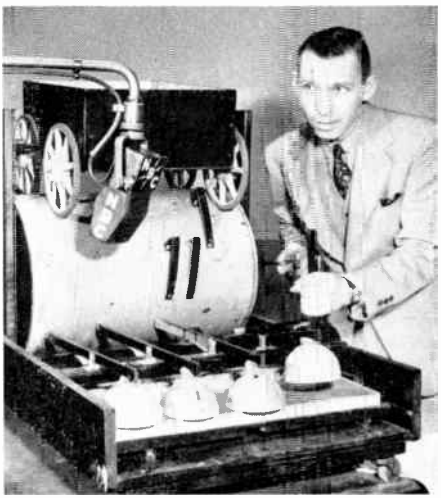

Figure 7.5.

talent is able to hear the sound effect. If it is not necessary for them to hear, or if it is undesirable for the effect to be heard in the studio, the audio signal may simply be fed to the sound control board in the control room and mixed-in there. The turntables may be revolved at any desired speed to obtain just about any kind of effect desired. We use records for almost all sound effects, except those which must be operated in some exact cadance such as our horse routine."

You notice the key lights begin to come up in the studio, and the floor manager is clearing the area of stage hands and other unnecessary personnel. "Get ready! Take opening positions" comes crisply over the loudspeaker. Your guide pulls your sleeve (and you suddenly remember to close your mouth and stop gaping), and you follow him back to the control room.

"The directions you just heard came over the loudspeaker from the director here in the control room. From now on, any directions he gives will be just as if the show were actually being broadcast. He will give directions to the floor manager over his headphones, and the floor manager will relay any necessary information to the talent by hand signals."

The TD opens his mike to all cameramen and gives the order to "open cameras." The cameramen uncap the lenses and touch up the focus for the opening shots. You glance at the monitors and note that all cameras are giving good results, including No. 2. You marvel at the results these men are able to achieve amid such bustle and confusion, and begin to realize that each man performs his particular duty much as a specific gear operates in a complex mechanism. Your respect goes up several notches for the TD and program director who must think of the overall production and integrate each order into

Figure 7.6. Courtesy Gray Research & Development Co.

a sequence which most efficiently moves the production along the desired path.

The director glances at each camera monitor in turn, then gives the order "Ready music!" The floor manager holds up a finger toward the orchestra, signifying stand by. "Hit music, fade in camera 3." The floor manager's hand goes down rapidly, the orchestra hits the opening fanfare, the TD operates his fader to bring in the signal from camera 3 which is trained upon a title-card rack. The assistant director in the control room started his stop-watch running at the first cue "Hit music."

The director is now calling off numbers; "two . . . three . . . four . . ." and you observe that the title cards are being dropped into place before the No. 3 camera, giving opening information as to title of show, director, etc. The director glances to the preview monitors (picture tubes on the various camera control units) and orders "more headroom on 1." You look at the camera control units with the large numeral "1" on it and note that a sign above the master-of-ceremonies' head comes into view as the cameraman pans up. "Ready 1 . . . take 1!" The TD punches a button on the switcher unit and camera 1 is on the air. The rehearsal is well on its way.

Your guide nudges you and whispers, "we'll watch the on-air tonight, let's look around," and he moves toward the master control room adjacent to the studio control room. You notice at once that the sound from the speaker is different from what you have left, but that one of the picture monitors is showing the on-lines signal from the rehearsal. The ON-AIR monitor is showing the picture which fits the sound you are hearing, and you realize that master control is concentrating upon the on-air program.

"We are taking a network program at the present time," your guide tells you. "The pre-view monitor shows the rehearsal picture so that continuity to MC (master control) is checked. The operator may also listen to the sound when desired." He moves over to one side of the room where several film cameras are located. You note that a wall is in front of these cameras, with small holes through which you notice the film projector lens (Fig. 7.1).

"Our setup here, in common with a number of stations, uses a combined film room and MC. Since we have 35mm projectors as well as 16mm, it is necessary to have a completely fire-proof room for the projectors as required by state laws. If we used 16mm exclusively, the projectors would not need to be isolated from the rest of the room, although this is advantageous for a number of reasons. Come into the projection room and we'll see why."

The minute you enter the door of the projection room, one very good reason registers at once. All cues of the director and the TD on the rehearsal are coming over a loudspeaker, and the monitor in the booth shows the on-line picture of this rehearsal. The sound of the rehearsal show is also coming over the speaker system. "The show which is being run-through now involves film inserts at several intervals during the program. Although the projectors are operated remotely from the TD position, an operator must be here in case of any emergency. Should some technical emergency occur in the studio or control room requiring unusual attention of the TD at that point, the operator here must take over and listen for the cues. He therefore always follows the script of the production so that he is alerted for any possibility. Separation between this room and MC allows the MC operator to be more aware of the on-air signal when it differs from local originations. It is also possible with this type of set-up to do all the film editing and cutting in this room rather than cluttering up MC."

You notice an operator working on one of the projectors, using a white rag and cleaning fluid on the film gate. He explains that keeping the film gate clean is one of the major jobs in the

projection room. "Pile-up of emulsion is the cause of *horns* forming on the gate," he says, "and we clean ours daily to prevent this formation."

"Ready film!" You hear this at a louder level than the program audio, and you are momentarily startled since the operator following the script is not near the machine. Then you hear "Roll film!" and a relay snaps, starting the projector rolling. You remember then that the TD is controlling this projector from his switcher unit. You also know that these projectors are of the pulsed-light type, since otherwise the "Roll film" cue would have been given 3 seconds before, to start the projector running into sync-speed. As you watch the monitor, you soon notice the short bursts of light in the upper right-hand corner. The director says "Ready camera 2," as the second set of cue-marks appear, you hear "Take 2." You note that camera 2 signals are now switched to the on-line monitor, and that a preview is still showing the runout projector. Suddenly several numbers and X's appear, then another picture starts, at which time the relay clicks again and the projector is stopped. You hear the TD come in over the sound on the loudspeaker, "Joe, reverse film to first frame. Sorry," and you see the importance of the projector operator even though remote control of projection is used. The TD overran the following cue for the subsequent film insert. You ask your guide if it is ever possible for the TD to reverse the film from his position.

"I understand that a projector is under development which permits reversal, or re-winding of film directly on the projector," he tells you. "But as of this date, film is re-wound outside the projector. It may be backed up by hand as the operator is now doing by releasing the pull-down mechanism and then restoring the proper amount of upper and lower loops." Watching the operator you see that he has punched a "local" control button which gives him complete control over the projector, so that it cannot be started by mistake from the remote position. He backs the film the few frames necessary, restores the upper and lower loops, re-engages the pull-down mechanism, and again presses the "remote" button. "A light appears on the control panel at the TD position," the guide explains, "which shows him that control has been restored to his panel."

"Sometimes," he continues, "the TD simply starts the projector from his position leaving it up to the film operator to stop and re-cue the projector for any following film insert. This is done especially where a great deal of switching and mixing is to be done. It will probably be decided in this instance that this is the best way."

Leaving the film room and re-entering MC, your guide leads you to a far corner of the room where another operator is talking into a phone marked PL (abbreviation for private line). He is manipulating the controls on a monitor in which the picture suffers vertical roll-over and intermittent break-up in the horizontal direction. Your guide explains that a remote relay pickup is "checking in" from a program origin to take place that night following the studio in-rehearsal.

"The operator here is checking the signal from our microwave transmitter. The receiving dish is mounted about half-way up our transmitter tower. This is a regularly scheduled remote and unless some condition has changed the signal should be very good."

In watching the monitor you tell yourself that some condition must have changed, since the picture is not steady enough to distinguish anything but a vague impression of the pickup. The operator speaks again into the phone.

"Rotate your skyhook through the 20 degree arc again," he says, and you note he is glancing at a meter on the output of a panel marked "Microwave Receiver." The needle climbs slightly higher, then slowly lowers to a very low value (you note that nothing but "noise" appears on the monitor), then starts its climb back. As it reaches the peak, then

starts to decline, the operator says quickly, "Hold it! Back . . . back . . . Hold it!" Then grunts disconcertingly. "Not enough sync level, and signal is noisy. Last night's wind storm must have slightly changed our dish here. I suspect it's too late to get a man up the tower. I'll see if I can stretch it here enough to hold."

He reaches over to a control panel upon which the words STABILIZING AMP are engraved along the bottom. An input switch is already thrown to the "Microwave Receiver" position, and you note that the monitor has been connected to the output terminals of this amplifier which are marked "monitor." The operator throws the switch which has been set on a position marked "Normal," to another position designated "Noise." You notice that the picture no longer breaks up horizontally, but that vertical roll-over still occurs at intervals. The operator is now slowly adjusting a control designated "Sync Separator," and closely observing the waveform scope at the bottom of the picture tube. He switches from "Line" to "Field" position on a switch for this scope and still slowly rotates the "Sync Separator" knob. You notice that the grass is now without spikes, and that the sync pulses gradually reach the bottom line across the calibrated face of the waveform tube. A glance at the picture tube now reveals a steady picture of an empty baseball diamond, with a large "Chesterfield" signboard visible along the far side of the diamond. You try to visualize what that field will look like under artificial illumination that night, and wonder at the technical adjustments that will have to be gone over just prior to broadcast.

"OK Bill. I can use as is for tonight. We'll get the crew on it tomorrow and double-check alignment on the tower. The signal is definitely weaker than normal through both the main and auxiliary receivers. See you."

As you turn around you notice that the guide has left you and is conversing with the MC operator. They are observing the monitor showing the on-rehearsal line, and as you get into position you note that a "superimposure" is being made of the orchestra conductor as he faces the orchestra, over a normal medium-shot of the musicians themselves. The conductor's face on this super is as large as the entire orchestra, and the picture is very striking and interesting. Some concern is being evidenced, however, by the MC operator and your guide. Watching the picture as the super is dissolved back to normal over-all view, you notice a distinct transitional effect in the picture which seems to spoil momentarily your enjoyment of the scene, although you can't put your finger on what it was.

The MC operator is shaking his head. "That super will have to be re-arranged, probably re-lighted," he remarks. "The whites are clipped excessively, and the blacks are getting into sync range. No setup. Probably the TD noticed it too." But you observe the MC operator makes a notation on a slip of paper to double-check this occurrence when the rehearsal is over.

Your guide notes the somewhat puzzled look on your face and, being a conscientious fellow, trys to explain what happened. "Some very peculiar effects take place at times when attempting supers with the mixer-switcher unit. The TD, or mixer operator, must adjust the individual gain controls of the two signals so that the super is made distinctively on the screen. If the signals add together in the wrong places, or subtract in the wrong places, the background level in the monitor and home receivers drastically change. This is the primary reason for the development of special *Montage* amplifiers, or special effects equipment, in which the signals may be individually clipped and controlled before combining in the output circuit. We are installing one here as quickly as delivery can be made. Such facilities also greatly expand the scope of possible special effects without excessive rehearsal time."

You follow your guide back into the studio control room preparatory to visiting the lab which is adjacent to the

other side of the control room. As he pauses momentarily you notice that the surry-with-the-fringe-on-top scene is underway. It is apparent that many of the front lights have been turned off, and that a diffused light is played upon the man and woman on the seat. The screen behind them is alive with a quite believable country-side scene, moving to the right as you watch the activity. Looking on the master monitor you see the surry with the actors apparently moving forward at an easy pace. The two are singing a duet with orchestral background, and the horses hoof-beats are in exact cadence with the melody. Unless you were watching with your own eyes the sound-effects technician operating the rubber plungers (Fig. 7.5) you could swear that the sounds were real horses-hoofs on a country road.

"As you may see," your guide explains, "four mikes are used for the entire production (Fig. 7.7). Boom mike No. 1 picks up the orchestra, or follows singers around the tables, or picks up conversation from the tables. Floor mike No. 2 takes the master-of-ceremonies, fixed singer location, or picks up the orchestra when boom mike one is following a singer around. Boom mike No. 3 is now picking up the duet, and floor mike No. 4 is the sound-effects mike. Camera No. 1 is used principally for the orchestra and activity in that area, with camera No. 2 also used so that choice of signal is broadened. Camera No. 3 is used on the title cards and sponsors printed messages. We often use slides for this work since this practice frees one camera channel. However, on this particular production, three cameras are needed anyway for good production technique. Although number three is farthest away, an 8½" lens permits close-ups of one person when desired. The announce booth you see to your right contains an announce mike and a line-monitor for the announcer's use. He makes many of the announcements over the printed card pickup, and may watch the monitor to pick-up his cues depending upon the card or message displayed."

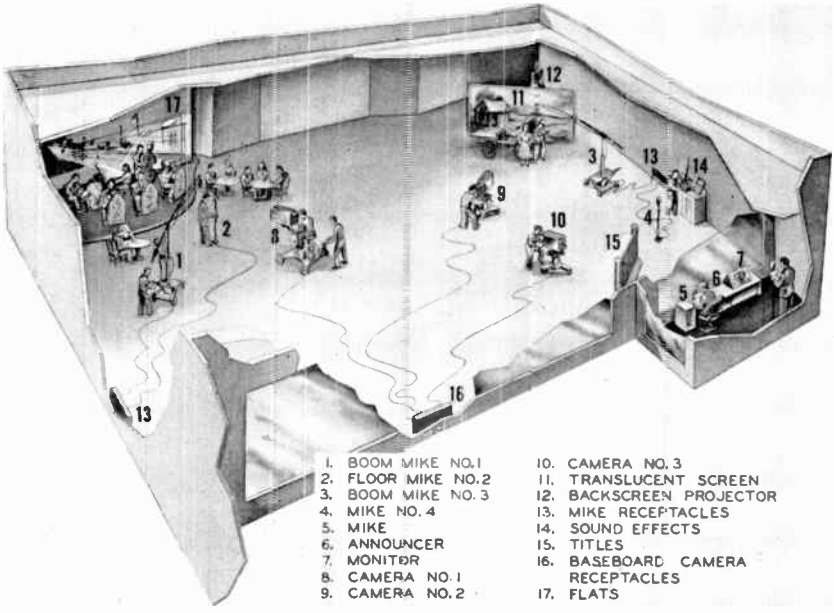

Figure 7.7.

"The super which you saw in MC of the conductor's face over a front view of the orchestra was done by dollying No. 2 to the rear of the orchestra and training it with the 135mm lens on his face. Camera 1 was picking up the front view of orchestra only. Naturally the lighting must be watched very closely, the conductor must be placed just right to be out of view of camera 1, and the camera 2 must not be in view of camera one lens. The respective lighting must still be worked out before tonight's broadcast. Now watch this transition."

As the duet comes to a close, and the horses hoofs continue in beat with the closing strains of the music, the program director instructs "Ready to go to black." Then, "Go to black . . . fade sound! Ready to take one!" Watching the line-monitor you see the screen fade to black as the TD operates his fader control, and the musical strains and sound of horses-hoofs grow fainter in exact ratio to fade-out of picture. (You note the audio engineer at the control board is watching the monitor, and using the master gain control to fade all mikes so that no sound comes through when screen reaches black.) "Take one!" instructs the program director. The TD punches a button marked "CAM-1," and you note the fader for that bank of switches is already "ON." The audio operator quickly opens the master gain and sound is again alive. The floor manager in the studio had previously cued the orchestra to stop entirely while the screen was black. Front lights were also turned back on during this interval, and you realize they were off during the preceding scene to prevent washing-out the back-projected picture on the translucent screen.

You follow the guide through another heavy door marked "Laboratory" into a sound lock which leads to another heavy door with central panel mounted in rubber. "A lot of noise sometimes occurs in here," the guide explains, "and the lab is thus completely isolated by sound locks on the doors and suspension on springs for the entire lab. Regular studios are often treated the same way, especially if in very noisy locations, or in the same buildings with heavy moving equipment such as generators, presses, etc. All of our maintenance on both video and sound equipment is done in here, as well as experimental work on lighting, sound effects, and so forth. These fellows (Fig 7.8) are developing a trick lighting effect which requires a special type of syncing with the camera tube driving pulses. Stations are just beginning to get wise to the great variety of effects, both desirable and undesirable, that are directly under the influence of lights and lighting technique. To minimize the undesirable effects produced with the newer image orthicon tubes having high spectral response in the ultra-violet region, some type of "minus blue" filter, such as the K2, is usually used with the lens systems. This is especially so when fluorescent lighting supplies a great portion of the key lighting. Many times, however, very striking and desirable pictures may be obtained in monochrome systems by bathing color samples such as red, yellow or green in direct ultra-violet light. No filter is used on the lens, and with this method the aforesaid colors reproduce as black, rather than the usual lighter tones of gray under ordinary lighting."

Figure 7.8. Courtesy CBS.

Another unusual use of light is the deliberate bathing of a scene in infra-red, and equipping the camera with the 5655 or similar type of image orthicon. This tube has a high spectral sensitivity in this region, and the stage may be very dark to the human eye, yet reproduce as clear as daylight by use of infra-red. This procedure is practiced more in the field than in the studio. Pickup of an opera, for example, where the mood lighting must be very dim at times, is too dark for adequate picture transmission. Just enough infra-red may then be used to bring the reproduced picture to the required brightness level. The audience at the opera itself notices no difference in the scene."

As you tour through the maintenance lab, you are impressed with the number of oscilloscopes ranging from small ones to an extremely complex rack-mounted installation. Signal generators, marker generators, meters of all descriptions and a variety of tools, parts, tubes and motor-driven machinery combine to hint at the ultimate requirements of this department in a TV station.*

With an exchange of thank yous, and in possession of tickets which will place you in the audience for the broadcast tonight, you take your leave to run down a hamburger and coffee. Of one thing you are sure; your presence in the audience tonight will contribute to your education not a whit in comparison to your afternoon visit behind the scenes. Your impressions of lights, microphones, cameras and the chain of control units will haunt your memories from now until the time you become an integral part of the teamwork.

Of the utmost importance to any television station is a provision of flexibility in equipment interconnection so that the inevitable emergencies which occur may be rapidly dissolved. It is up to the station to provide this means in its initial installation; it is then up to the technical staff to get itself mentally prepared to take advantage of emergency procedures which may be necessary at any time. Meeting emergencies is a separate category from the maintenance department. The maintenance personnel tests and adjusts equipment during intervals it is not required. Any operator of any particular piece of equipment may be faced with a suddenly defective component. In television as in regular aural broadcasting, no time is allowed to trace down the origin of trouble, which may be anything from a simple tube failure to a transformer outage. What *must* be done with the minimum elapsed time is to re-route the signal through a spare channel.

Suppose, for example, that the picture suddenly disappears from a camera control unit picture tube. First analyze the number of possibilities that exist. If that particular camera is on the air at the time (selected at the mixer-switcher unit), the picture *could* still be transmitted. This is to say that if the picture still holds at the output monitor of the switcher unit, the camera control unit kinescope amplifiers or sweep circuits have failed. In this case the video operator may be called upon to monitor by this output monitor, use a preview monitor on the switcher unit when not on the air, or he may be required to connect another control unit into the circuit. Obviously the latter procedure would not ordinarily be necessary here, since substitution of another control unit would call for some time interval in which camera adjustments such as MULTI FOCUS, BEAM CURRENT, IMAGE and ORTH FOCUS, etc., would have to be made. Since only the picture monitor has failed, a standby monitor could more conveniently be bridged across the monitor terminals if necessary.

To provide methods of meeting studio control room emergencies, a coaxial patch-panel is often included in the control room layout. This provides terminations of camera outputs, power inputs, etc., so that any interconnection may be

*Maintenance outlines are included in Chapter 8.

made by patching. Assume for the moment that the above occurrence had caused the picture to be dropped from the line output. The director would immediately order a cut to another camera if two or more were being used. Naturally the production will suffer momentarily from this emergency condition. There are several possible procedures at this point which will depend upon the particular layout. If a quick check with the cameraman reveals that he is still seeing the picture in his viewfinder, indicating that the trouble is in the control unit, the coaxial patch cord may be placed from CAMERA No. 1 (or 2, 3, etc.) to a spare camera control unit IN. THIS WOULD ONLY BE EFFECTIVE IF THE SPARE CAMERA CONTROL UNIT HAD BEEN PREVIOUSLY ADJUSTED FOR THAT CAMERA DURING ALIGNMENT PROCEDURES. Thus the reader may realize the thought that should be given any possible emergency prior to actual broadcast.

The more usual procedure is to substitute an entirely new camera chain. This requires that a standby camera and control unit be initially adjusted and aligned during the warmup period. Since each camera chain is supplied by a separate power supply, this procedure automatically provides an emergency camera, control unit and power supply which may be placed in service with the minimum of elapsed time. This is the routine used at network originations and is good operating practice for any station.

Installations using the coaxial patch-panel use multiple-pair coax cords which provide all signal and power supply circuits. These include video signal, intercom signals, driving and blanking pulses, and power supply voltages for control unit and camera.

When trouble occurs in the mixer-switcher amplifiers, it is possible in some installations to substitute spare intermediate video amplifiers by the patch-panel method. Where this is not possible, unless a spare and pre-adjusted mixer unit is available, the production must do its best with only one camera. This is done by inserting sync at the camera control unit as described in Chapter 3, and feeding the composite signal directly to the stabilizing or line output amplifier, by-passing the switcher unit.

Patch panels are also provided for the audio channels. IN and OUT terminations appear for mike lines, pre-amps, attenuators, low-level amplifiers, studio and line amplifiers.*

The unusual concentration required on behalf of the reader to meet the challenge of the technical requirements of television systems is apt to cause him to neglect the very necessary program values with which the equipment is concerned. A competent engineer in the business of TV broadcasting will be as familiar with these values as he is with the technical know-how.

For the purpose of gaining as much "production consciousness" as possible to obtain on the theoretical level, the following references are recommended to the reader. These books are readily obtainable at most local libraries stocking technical and television program publications.

Edward Stasheff and Rudy Bretz; *The Television Program*, A. A. Wynn, Inc., New York, 1951.

Thomas H. Hutchinson; *Here Is Television*, Hastings House, N. Y., 1950.

Richard W. Hubbell; *Television Programming & Production*, Second Edition, Murray Hill Books, Inc., New York, 1951.

John F. Royal; *Television Production Problems*, McGraw-Hill, 1948.

Louis A. Sposa; *Television Primer of Production and Direction*, McGraw-Hill, 1947.

Hoyland Bettinger; *Television Techniques*, *Harper & Bros.*, New York, 1947.

---

*H. Ennes; Broadcast Operators Handbook, Second Edition, John F. Rider Publishing Co., Inc., New York. Pages 114-118.

CHAPTER

8

Testing and Maintenance at the Studio

The quantity of equipment and the inherent complexity of circuits in the television broadcast system make mandatory a well organized and intensified maintenance schedule. Whereas in the smaller aural broadcast installations the maintenance department has been virtually non-existent in some cases, even the smallest TV station requires a definite maintenance routine. The extent of this department, and the scope of equipment necessary, increases as the size and complexity of the specific installation.

Testing and maintenance at the studio does not ordinarily include emergency work which must be performed while the equipment is operating, although maintenance personnel may be required to meet such a contingency. A well planned installation will include means of meeting emergencies by rerouting the signal as outlined in the previous chapter. The faulty unit may then be assigned to the maintenance department for checking and repair.

Type of maintenance may therefore be classed in just two phases: priority work which must be performed on faulty equipment to place it in service as soon as possible, and work which is classified as *preventive maintenance*.

8.1 Maintenance Organization

A dis-organized maintenance department is almost as bad as none. For efficient performance and the utmost effectiveness, an explicit and detailed organization of work performed and scheduling of preventive measures to be undertaken must be in effect. The foundation upon which such an organization may be based is the development of detailed and exhaustive records to be kept by personnel. If these records are thoroughly planned and drawn up for the specific installation involved, the maintenance department will function automatically in the most efficient manner.

One very small part of the overall problem which points up the necessity for keeping records of system performance is the fact that approximately 300 vacuum tubes are employed at one time in the very simplest TV installation. Obviously this number runs well into the thousands in the larger stations. Many of these tubes, particularly in the camera chains, picture and waveform monitors, relay equipment and film chains employ miniature-type tubes which are *not* known for long useful lives. Maintenance routines for vacuum tubes alone requires thorough system records for reference and testing schedules. All tube type numbers should be listed in sequence, along with the total number of each type in service, the equipment type in which each is used, the number employed in that specific equipment, and the dates on which the tubes are checked showing condition and any necessary replacements. Suggested schedules of maintenance are given later.

Examples of the thoroughness with which records should be kept are given

PRIORITY MAINTENANCE

(FILL OUT EACH DAY. IF NO PRIORITY MAINTENANCE OCCURED, MARK "NONE". IF WORK MUST BE CARRIED OVER TO A FOLLOWING DAY, MARK "CONTINUED - (DATE)")

DATE _____

EQUIPMENT TYPE & NUMBER	TIME RECEIVED	TIME OF FAILURE	NATURE OF FAILURE	ANALYSIS	TIME REPAIRED & OK	PARTS USED (INCLUDING TUBES)	REPAIRED BY (INITIAL)

(FILE IN DUPLICATE - ONE COPY TO CHIEF ENGINEER - ONE COPY LAB. FILES)

Figure 8.1A.

in Figures 8.1A and 8.1B. The PRIORITY MAINTENANCE sheet should be filed daily in medium and large setups. This provides a record of the time of failure of any particular equipment, the time received by the maintenance department, and the nature of failure, an analysis of the trouble, and the time it is restored to service. Any necessary replacement parts or tubes are recorded to this sheet, providing a daily check on inventory of stock. The MONTHLY MAINTENANCE RECORD (this could conceivably be a yearly record in the smallest stations) provides an accurate check on the effectiveness of the preventive maintenance schedule, the comparative service of equipment, and relative rates of failure in service. This report is of utmost interest to the executive department, whereas the PRIORITY MAINTENANCE reports reveal to the technicians types of failures to be expected, so that preventive maintenance time may be effectively altered. Thus more time may be given to those functions requiring more maintenance over a period of time, increasing the efficiency of maintenance schedules. Also such case histories of trouble often aid a new technician in more rapidly diagnosing the trouble.

The records kept of actual preventive maintenance should be in the form of a schedule, with every point pertinent to the particular installation listed under its daily, weekly, monthly, semi-annual and annual reports. Obviously

MONTHLY MAINTENANCE RECORD

(FILE IN DUPLICATE · ONE TO CHIEF ENGINEER · ONE TO LAB. FILES)

FOR MONTH _____

EQUIPMENT TYPE & NUMBER	NUMBER OF UNITS IN SERVICE	FAILURES IN SERVICE (NO OF OCCURANCES)	UNIT HOURS OF INTERRUPTION (TOTAL)	PRIORITY MAINTENANCE IN MAN-HOURS	SERVICE INTERRUPTION PER UNIT

Figure 8.1B.

the form of such records and intervals between inspections will depend upon the specific conditions involved. After a year or two of keeping records such as exemplified in Figs. 8.1A and 8.1B, the utmost in effectiveness of preventive maintenance schedules may be drawn up for that particular installation. Some form of check-off system should be used so that the personnel is required to check each component listed on the sheet upon inspection. This serves not only to indicate to the Chief Engineer that the work has been performed, but serves as a guide to the maintenance engineer in performing duties he might otherwise inadvertently neglect.

Maintenance at the studio includes everything at the studio, studio control rooms, master control, and film room. Also included is the field equipment consisting of field camera chains, sync generators, mixer-switcher units, monitors and microwave relay equipment.

8.2 *Suggestions for Preventive Maintenance Schedules*

The following examples of preventive maintenance schedules, while not presented in the record form, might represent a basis for functioning in a medium sized station with local studios, network affiliation, and microwave relay equipment.

Studio Preventive Maintenance (Daily)

1. Check all operational dial positions on sync generator in use. Note any change from previous settings.

2. Check waveforms on suitable oscilloscope of the standby sync generator (where used), noting any change required in dial settings for proper operation from previous settings.

3. Record all meter readings on power supplies for camera chains, film chains, etc. Investigate any peculiarities in meter readings. Feel all transformers, chokes and capacitors mounted on front panel for excessive heating. Become acquainted with feel of components under normal functioning. Make report of any component thus checked (especially capacitors) which may be suspected. Examine all power supplies not in use at that instant by turning it off, opening the interlocked door (where used) and observing for blistered resistors, cracked lead-through insulators, etc. Double-check operation of interlock where used. (Interlocks consist of a door switch so arranged that when door is opened, high voltage is automatically removed from the circuits.) Vary the voltage range potentiometer under normal loading conditions and sample the voltage on a high-resistance voltmeter at the output terminations. Note the range through which the supply regulates and compare to the previous normal range. Investigate any serious departure from normal to anticipate trouble in the regulator section.

4. Take all readings where meters are provided. For example such meters are often included in the amplifier racks for the audio circuits, with a switch on each panel enabling indication of voltage drop across cathode resistor in each stage. Become familiar with normal readings and note any undue deviation from normal. Examine all glass-envelope tubes for gassy conditions. Check that all tubes are tightly seated in their respective sockets. Watch for loose grid caps or connectors.

5. Give all camera lenses a thorough cleaning.

Weekly (In addition to daily schedule)

1. Camera inspection, studio and field. Check blower and path of air flow. This flow should be from underneath into the image orthicon compartment, through the sweep compartment over the horizontal output transformer and tubes, then forward, upward and out the vent in top of viewfinder. This path especially must be observed for settling of dust on moving parts such as yoke slides (tracks on which the coil assembly rides for optical focusing) etc. Clean all parts scrupulously. (NOTE: methods are described later. It is our purpose here to outline the schedule

only.) Apply power to the cameras for one hour (with lens capped). Turn off power and open all side doors. Observe all components such as resistors, etc., for miscoloring, bulging, blistering, etc. Get the "feel" habit for capacitors, resistors, etc., so that undue heating effects may be noted. Check settings of all operating controls for normal optimum operation. Are any of these controls approaching the extreme end of rotation? Check voltages with 20,000 ohm/volt meter at terminal board and note deviation outside normal operating range. Check all wiring for normal placement and tightness. Be assured that all tubes are tightly seated and that miniature tube shields are correctly mounted on their spring bases and in place. Check tubes at all grid caps for looseness or cracked envelopes. Check all switches for proper operation and power switches by feeling for adequate "snap" in operation. Clean the entire camera and viewfinder with a compressed air-stream followed by thorough vacuuming. Check indicating lamps. Test target heater for proper operation. Record "Elapsed Hour Time" meter reading in camera (where used). If image orthicon in that particular camera has seen close to 300 hours of operation, place in proper container for 4 weeks storage. If new pickup tube is installed, check entire alignment and operation.

2. Check all remaining field equipment. Put through normal alignment procedures and note any operational control which must be placed near extreme end of rotation. This procedure includes field camera control units, mixer-switcher unit, pulse-former unit and pulse-shaper unit, power supplies, microwave transmitter and receiver. Also to include all remote audio mixing amplifiers. Thoroughly clean all equipment and inspect all connections for tightness. This is mandatory for portable-mobile equipment due to excess amount of jarring in transit. Record any necessary maintenance work performed, parts or tubes replaced, etc. Use all spare interconnecting cables so that proper function is assured. Also check all spare microphone extension cables. Be assured that all equipment leaving the studio for field use is in top operational order.

3. Go through entire audio patch-panel racks and use patch-cords on each jack strip by inserting and removing the tips several times. BE SURE THOSE PARTICULAR JACKS ARE NOT IN THE SIGNAL CIRCUIT AT THE TIME OF PATCH-CORD OPERATION. This procedure keeps the jacks clean except in unusually dirty or dusty locations, and prevents the necessity of using such tools as jack burnishing devices, etc. Follow this routine by vacuuming the jacks. Polish all patch-cord plugs.

4. Check levels of incoming network lines, both video and audio. Note any necessary changes in position of operational controls on stabilizing amplifier connected to incoming network termination. Check all spare stabilizing amplifiers for proper operation.

5. Check operation of sync-lock unit (where used).

Monthly (In addition to daily and weekly schedules)

1. Check all tubes in studio and field units on a dynamic mutual-conductance type of tube checker. (Part of this work must be done after sign-off, since equipment in use and anticipating early use cannot be put out of service long enough to complete.) Check tubes for microphonics as well as condition. Obviously in larger installations this section of the maintenance schedule must be done over more than one day. Actually it could take place over a weeks time by assigning specified portions for each day. Thus the magnitude of work performed could be leveled off daily even though some functions occurred only monthly or quarterly.

2. After sign-off, check the performance of all solenoid-operated relays (where used). Methods of checking are

described later. Clean all relay contacts with carbon-tet and thin linen cloth cut into convenient sized strips. Check relay supplies for normal operation loaded and unloaded. Any serious departure from normal operation as determined previously should be thoroughly investigated and preventive-maintenance performed.

3. Clean all studio camera control units, mixer amplifiers, picture and waveform monitors and line amplifiers by using compressed air streams and vacuum. Perform this operation on all tube sockets as well as wiring and chassis and sub-chassis components.

4. Clean all audio amplifiers in the same manner. Clean audio console attenuators and switches. Clean turntable switches, motors and cabinets. Keep proper records of all oiling procedure necessary for record turntable motors or film projector motors and perform any oiling necessary.

5. Perform the same cleaning procedures on all film-chain equipment. This includes projectors, amplifiers, camera tubes and housings, etc. Note any changes in position of operational controls that may be approaching the extreme end of operational range.

6. Operate all spare image orthicon tubes (except those in normal 30-day rest periods) for one to two hours. This is to prevent formation of any slight amount of gas which might otherwise accumulate within the tube. Check for normal operation. Run sensitivity and resolution checks and note any deviation from previous checks given. Keep accurate records of these checks.

Quarterly (in addition to daily, weekly and monthly schedules)

1. Inspect, clean and service (if necessary) all push-button switches (video switcher-mixed unit, audio console, etc.). This should include all control switches, such as voltmeter selector switches, etc. Studio and field equipment.

2. Inspect and lubricate (if necessary) any flexible drive cable in the installation, both studio and field equipment.

3. Check all AC and DC indicating meters against a known and accurate meter.

4. Check *all* connections on *all* terminal boards for tightness. Inspect terminal boards and connections for cleanliness, cracks, condition of insulation on leads, etc.

5. Bring out all spare camera and interconnection coaxial cables and place them in service for test.

6. Clean or replace any air-filters used in cameras, equipment racks, spotlights, etc.

7. Clean and inspect all lighting equipment. Polish all reflectors. Inspect spotlight lenses, housings, etc. Clean and lubricate all rotational mechanisms for lighting fixtures.

8. Inspect and lubricate all camera and light-fixture dollies.

Semiannually (In addition to regular schedules)

1. Run overall resolution test from camera to transmitter line. Any degradation of resolution from previous checks should be thoroughly investigated by isolation of stages.

2. Take complete inventory of spare parts, tube, pilot lights, oil and grease, cleaning equipment, fuses.

3. Run overall frequency checks from microphone to transmitter line. Any loss in performance should be traced down by isolation of equipment. Run noise and distortion checks on overall audio equipment and compare with previous records.

By giving considerable thought to a maintenance schedule as outlined above, weekly, monthly, and quarterly procedures may be evenly spread out as daily functions so that extra personnel is not required at certain days weekly or monthly. It will be obvious that the utmost in efficiency and effectiveness of maintenance schedules are

achieved for a specific installation only after a period of time in keeping accurate records.

MAINTENANCE PROCEDURES

8.3 *Video Amplifiers*

Since the video amplifier is incorporated in almost every unit in the chain of television broadcast systems, testing and maintenance applicable to this function will first be outlined. Each unit may then be individually covered in all other functions.

There are two test instruments absolutely essential to the TV broadcast maintenance department: a suitable oscilloscope preferably with both driven sweep and sawtooth recurrent sweep, and a good VTVM. Suitable probes for these instruments must also be used. Also desirable is a reliable sweep generator and marker generator.

By the time the reader has reached this point in the text, it should be obvious to him that a video amplifier bears semblance to the average audio amplifier only in the basic RC method of coupling the stages. The *bandwidth* of an *audio* amplifier is based upon a concept which cannot be assumed in the *video* amplifier. That is, the mid-frequency gain is given a value of unity, and the upper and lower limits of the bandwidth are taken as those points where the gain falls to 0.707 (or 70.7%) of the mid-frequency gain. As will be demonstrated shortly, this concept cannot apply to the effective *passband* of a properly functioning video amplifier. In addition to this difference, video circuits employ blanking and sync insertion, and clamping circuits which affect the desired operation in certain stages.

It is most desirable at this time to clarify these differences so that the reader familiar with RC coupled audio amplifiers may readily re-orient his thinking in testing and maintenance of video amplifiers. Fig. 8.3A illustrates the comparison of a good audio amplifier response curve with that of a good video amplifier. It is noted that the midfre-

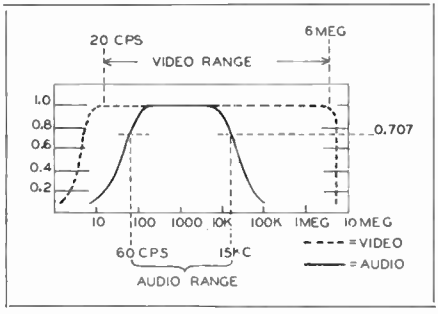

Figure 8.3A. The response curve of a good Video Amplifier (dotted lines) compared to the response curve of a good audio amplifier (solid line).

quency gain is given as unity or 1. The points on the audio response curve which correspond to a gain of 0.707 of the midfrequency gain are 60 cps and 15 kc respectively. This corresponds to a power loss of 3db, or 50%, and is generally defined as the *effective bandwidth* of an audio amplifier. A power change of 3db is the least value at which the average human ear notices a definite change in volume.

Note, however, that the desired passband of the video amplifier is taken over that portion of the curve which is essentially flat, denoting constant gain. Over this region of constant gain in an RC coupled circuit the angular phase shift should be proportional to frequency, resulting in an equal time delay for all input frequencies within this range. In the upper and lower end regions where the gain changes rapidly, phase shifts cannot be proportional to frequency and the time delay will therefore not be constant, resulting in phase distortion in the video amplifier.

Since this type of distortion is extremely detrimental to picture quality, its effects will be analyzed before going further. This study of phase shift and effect of circuit elements on this phase shift will serve to clarify the overall requirements of video amplifiers in frequency, amplitude, and bandwidth characteristics.

At the mid-frequency range of an amplifier, the shunt capacitances and coupling capacitances may be consid-

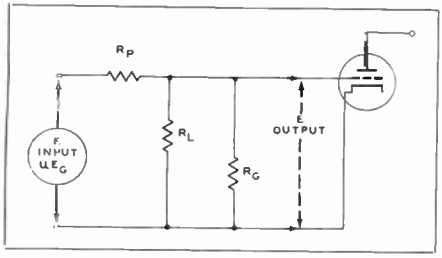

Figure 8.3B. (1) Equivalent circuit for RC coupled amplifier in mid-frequency range.

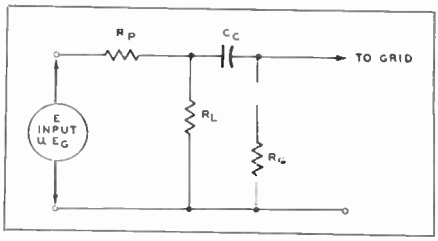

Figure 8.3B. (3) Equivalent circuit of RC coupled amplifier at low frequencies.

ered to have negligible effect on the amplification, and may be represented by an equivalent circuit as in Fig. 8.3B (1). In this range of frequencies, the gain of the amplifier may be assumed to be the product of the transconductance of the tube and the load resistor R_L. This is expressed as:

$$G_m = g_m R_L$$

where G_m = midfrequency gain
g_m = tube transconductance
R_L = load (coupling) resistor

At the higher frequencies shunt capacitances across the load resistor become effective which attenuates the amplifier response with increase in frequency. An equivalent circuit at the higher frequencies is illustrated in Fig. 8.3B(2). At the lower frequencies, the impedances of cathode and screen bypass capacitors and the coupling capacitor serve to attenuate the lower frequencies, and the equivalent circuit at low frequencies is shown in Fig. 8.3B(3).

To increase the passband of the video amplifier so that frequency and phase distortion may be held to a minimum,

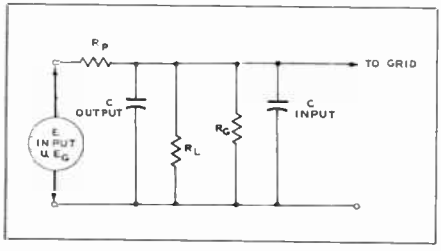

Figure 8.3B. (2) Equivalent circuit for RC coupled amplifier at high frequencies.

low frequency and high frequency boosting circuits are used. These were described in section 2.4, Chapter 2. In addition to these special circuits, a relatively low value of R_L is used, at the sacrifice of gain, to achieve a broader flat response than is possible with conventional values of load resistors. This is illustrated by the curves in Fig. 8.3C. The coupling resistors are most generally 1000 to 2000 ohms in commercial equipment.

Therefore for pentode TV video amplifiers it may be realized that the internal plate resistance is much greater than R_L, and that the grid resistor for the following stage is also much greater than R_L. With these conditions prevailing, the current change through R_L is in phase with the generator voltage since the tube internal resistance (pure resistance) is actually the principal impedance in the load circuit. (Observe Fig. 8.3B(3) during this discussion.) Also the internal plate current change is essentially equal in magnitude and phase to the current change through R_L, and the voltage drop across R_L is in phase with the plate current change. However, since the coupling capacitor C_c is reactive at the low frequencies, the current through R_g will be caused to lead the voltage change applied and therefore is displaced in phase. The amount of leading phase shift is determined by the ratio of the capacitive reactance of C_c to the resistance of R_g, and may therefore be seen to increase with decrease of frequency (larger capacitive reactance with decrease in fre-

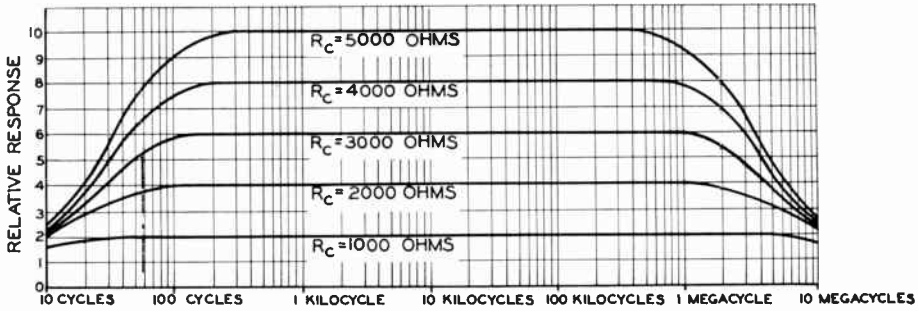

Figure 8.3C. Effect of plate coupling resistor on gain and bandwidth for typical high transconductance pentode such as a 6AC7 or 6AU6.

quency). Since the current change through R_g is displaced in phase, the corresponding voltage drop across R_g is likewise displaced in phase, and low-frequency phase distortion is prevalent.

In order to keep the voltage change across the grid resistor in phase with the plate current change through R_L, the time constant of the coupling network (C_c R_g) must be effectively increased so that the reactance of the coupling capacitor becomes negligible even at the lowest frequencies in the pass band. The two most obvious means of accomplishing this are *not* practical in design. First, the coupling capacitor could be made extremely large in value to provide negligible attenuation at the lowest frequencies. Larger capacitors, however, increase the effective shunt capacities to ground due to the physical size, severely attenuating the higher frequencies. Also, circuit instability in the form of "motorboating" may occur. The grid resistor R_g could be greatly increased so that the relative reactance of the coupling capacitor would be very small. This cannot be done beyond the limits determined by the maximum allowable grid resistance for the particular tube used, given in the manufacturers tube data. Too much grid resistance allows gas current (positive ion current) to accumulate on the grid resulting in excessive average plate current. The practical solution, therefore, is to shift the phase of the voltage changes across R_L so that, in conjunction with the coupling capacitor, the current changes through R_g are in phase with the current changes through R_L.

This is the function of the low-frequency boosting circuit described in section 2.4. Thus it should be realized that the problem of obtaining a wide pass-band is the same as that of achieving minimum phase distortion. For convenience, the equivalent circuit of a video amplifier at low frequencies with the added low frequency correction circuit is presented in Fig. 8.3D. The desired relative phase shift across R_L results when the two parallel branches of the load circuit are similar in impedance characteristics insofar as equal phase angles are concerned. This is accomplished when the product of the plate load resistor and the decoupling capacitor is equal to the product of the coupling capacitor and the grid resistor.

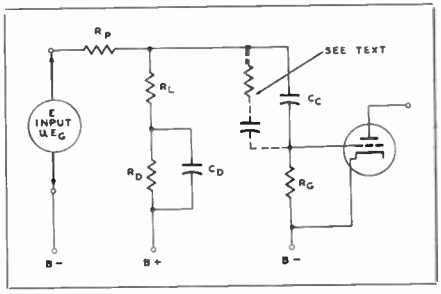

Figure 8.3D. Equivalent circuit of video amplifier at low frequencies, with addition of low frequency decoupling (boost) circuit. To provide equal time constants of the two parallel branches of the load circuit; $R_LC_D = C_CR_G$.

(Equal time constants.) This is stated:

$$R_L C_d = C_c R_g$$

and the current changes through the grid resistor will be in phase with the current changes through the plate load resistor. The decoupling resistor around C_d must be used to provide a DC path to the plate of the tube, and must be much larger than the plate load resistor. Since this value must be limited in size by the available B supply voltage (plate current must flow through this resistor as well as R_L), if R_d cannot be made large in ratio to $\frac{1}{2\pi f X C_d}$, then compensation is made by shunting the coupling capacitor with a suitable value of resistance. This value is such as to restore the similarity of the two parallel branches, and the maintenance engineer will find this method used in some cases. To avoid a DC path to the grid of the following stage, an extra capacitor is used as shown in the dotted lines of Fig. 8.3D.

Thus far we have seen how low frequency phase distortion is avoided by a properly designed decoupling circuit which extends response at the low frequency. (Review section 2.4 for effect on gain.) As is probably suspected by now, high frequency phase distortion is avoided by properly designed peaking circuits used to extend the passband through the highest frequencies to be passed (also section 2.4). At these frequencies (Fig. 8.3B(2)), the total shunt capacities across the load result in a *lagging* phase displacement in comparison to the mid-frequency range. A properly adjusted peaking circuit will provide a phase shift to compensate that of the effective load network.

Tube amplifying action in itself causes a normal 180 degree phase shift (exact phase inversion) in the output circuit compared to the input signal. This means that a uniform time delay occurs for all frequencies in the passband. If each single frequency is considered separately, it may be seen that for uniform time delay, a different phase shift must occur at each frequency so that the resulting phase displacement is proportional to frequency. At the horizontal scanning frequency, the time of one line is 63.5 micro-seconds. Across a 10" monitor this corresponds to about 6.35 micro-seconds per inch. Should any part of the video signal be delayed only one micro-second above the normal phase inversion, that portion of the picture would be displaced approximately one-sixth of an inch. Obviously if all frequencies in the passband were delayed one micro-second, the entire picture would simply be displaced about one-sixth of an inch, but would result in a satisfactory picture which could be centered by the centering controls. The resistance-capacitance elements, however, of the coupling networks when uncompensated or when the compensating circuits are out of adjustment, cause a shift in phase which differs both in direction and number of degrees for different frequencies. Phase distortion may be seen to be directly related to amplitude distortion, since minimum phase distortion is obtained only by a long flat topped response over the desired passband.

This is emphasized by considering the content of the video signal when the image to be scanned is the extreme case of a black bar on a white background. This is illustrated in Fig. 8.3E. In (A) is illustrated the ideal response where an abrupt rise in image orthicon tube current would occur as the scanning aperture encountered the leading edge of the black bar. At the trailing edge of this bar, the current should abruptly fall to the "white" level. Amplifier circuits which must faithfully reproduce such current changes will have exceptional amplitude and phase characteristics. If the amplifier has insufficient high frequency gain, the leading edge of the amplified wave becomes a gradual slope instead of a sharp rise as in (B). The reproduction is that of a gradual shading from gray to black on the leading edge of the black bar, and a gray to white "smear" on the trailing edge. In (C) is shown the effect of

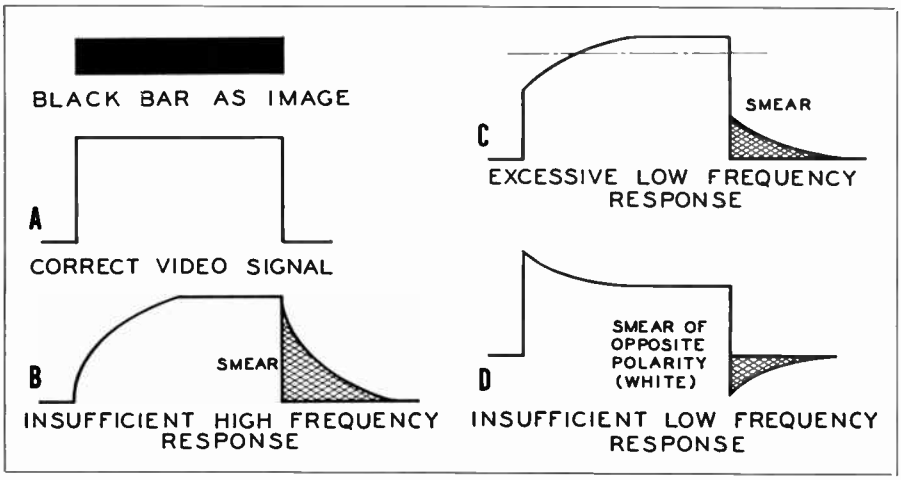

Figure 8.3E. Square wave Videa signals shawing the effect af amplifier deficiencies.

over-compensation of the low frequency response. The effect is similar to that of insufficient high frequency response but not as pronounced. Insufficient low frequency response with attendant phase shift is shown in (D). Since loss of lows causes the flat top of the ideal square wave response to become tilted as shown, black shading to gray occurs at the leading edge, while a white to gray shading smear results at the trailing edge.

One possible effect is illustrated in Fig. 8.3F. Such an effect may also be produced by transient oscillations set up in peaking circuits due to shock excitation of suddenly changing square wave currents through the coils. Damping resistors are used across series peaking coils which are often adjustable in commercial circuits for proper peaking and damping characteristics. Such adjustments are described later in this section.

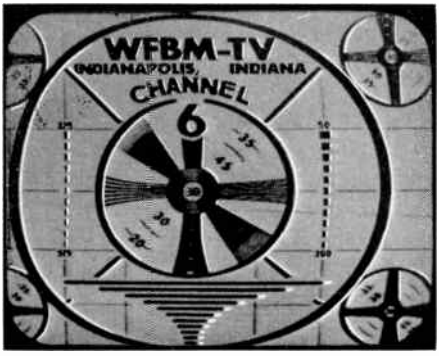

Figure 8.3F. Statian test pattern shawing effect af reversed polarity smear ar transient oscillatian. Caurtesy WFBM-TV.

The curves of Fig. 8.3G(1) and (2) show the correct relationship of phase shift proportional to frequency (uniform time delay at all frequencies) in comparison to that of an average amplifier not compensated for flat high-frequency response. The time delay in ratio to phase shift and frequency bears the following relationship:

$$\text{Time Delay} = \frac{\text{Phase Shift } (\theta) \text{ in Degrees}}{360^\circ \times \text{Frequency in cycles-per-sec}}$$

From observation of the desired characteristic curves at a frequency of 2 megacycles, $\theta = 30^\circ$. Therefore the time delay at 2 meg.:

$$\text{Time Delay} = \frac{30^\circ}{360\ (2 \times 10^6)} = \frac{30^\circ}{720 \times 10^6} = 0.041 \text{ micro-sec.}$$

From the same curve at 3 meg., $\theta = 45^\circ$, therefore:

$$\text{Time Delay} = \frac{45^\circ}{360\ (3 \times 10^6)} =$$

$$\frac{45^\circ}{1080 \times 10^6} = 0.041 \text{ micro-sec.}$$

From the same curve at 4 meg., $\theta = 60^\circ$, therefore:

$$\text{Time Delay} = \frac{60^\circ}{360\ (4 \times 10^6)} = \frac{60^\circ}{1440 \times 10^6} = 0.041 \text{ micro-sec.}$$

Thus it is observed that with phase shift proportional to frequency, a uniform time delay occurs at any frequency through the video amplifier. This results in a uniformly shaded picture, other factors being equal. Let's see now the effect of the uncompensated amplifier phase-shift curve upon time delay at various frequencies. From the uncompensated curve at 2 meg., $\theta = 27^\circ$

$$\text{Time Delay} = \frac{27^\circ}{360\ (2 \times 10^6)} = \frac{27^\circ}{720 \times 10^6} = 0.037 \text{ micro-sec.}$$

At 3 meg., $\theta = 38^\circ$

$$\text{Time Delay} = \frac{38^\circ}{360\ (3 \times 10^6)} = \frac{38^\circ}{1080 \times 10^6} = 0.035 \text{ micro-sec.}$$

At 4 meg., $\theta = 48^\circ$

$$\text{Time Delay} = \frac{48^\circ}{360\ (4 \times 10^6)} = \frac{48^\circ}{1440 \times 10^6} = 0.033 \text{ micro-sec.}$$

Thus "phase distortion" occurs and the ringing effect in the picture is apparent. It is noted that for high frequency phase shift, the time delay decreases as frequency increases. This is the effect of lagging phase shift across the coupling network due to shunt capacitances. At the low frequencies, the leading phase shift results in time delays which increase as the frequency decreases. Most of the ringing effect (smearing after black bars in the picture) is due to low frequency phase distortion. This may also be noticed as a gradual shading in backgrounds from top to bottom of the reproduced picture which cannot be corrected by vertical shading controls. High frequency phase distortion results in general deterioration of resolution.

The *figure of merit* of any video amplifier tube is a ratio expressing general capabilities in amplifying high frequencies. It is well known that gain at the higher frequencies is proportional to the transconductance (g_m) of the tube, and inversely proportional to the total shunt capacitance (C_t). The mathematical expression:

$$\text{Figure of merit} = \frac{g_m}{C_t}$$

is used where g_m is in micromhos and C_t is in micro-microfarads.

The shunt capacitances of any given tube increase when used as amplifiers. For example, the rated input capacity of a 6AC7 tube is 11 micro-microfarads. Due to the *Miller effect*, the effective input capacitance depends upon the stage gain in the following manner:

$$C_t = C_{gk} + C_{pk} + C_{gp}\ (1 + \text{gain}).$$
$$\text{Where gain} \cong g_m R_L$$

Thus the total shunt capacity (in addition to stray capacitance) is the sum of the grid-cathode, plate-cathode and grid-plate capacities times the quantity 1 plus stage gain. Since gain is the product (approximately) of the transconductance and the load resistance, it may be seen that the higher the value of R_L (greater stage gain for given tube), the higher is the effective shunt capacitance. Thus pure resistive loads reflect back to the input as capacitance. When the plate load is complex, the resistance reflects as capacitance, while the reactive portion of the load reflects as resistance.

The performance of a video amplifier must be measured in both gain and bandwidth. It has been shown how the choice of the value of R_L makes these factors mutually dependent (Fig. 8.3C). Therefore as one factor is made to increase, the other factor is made to de-

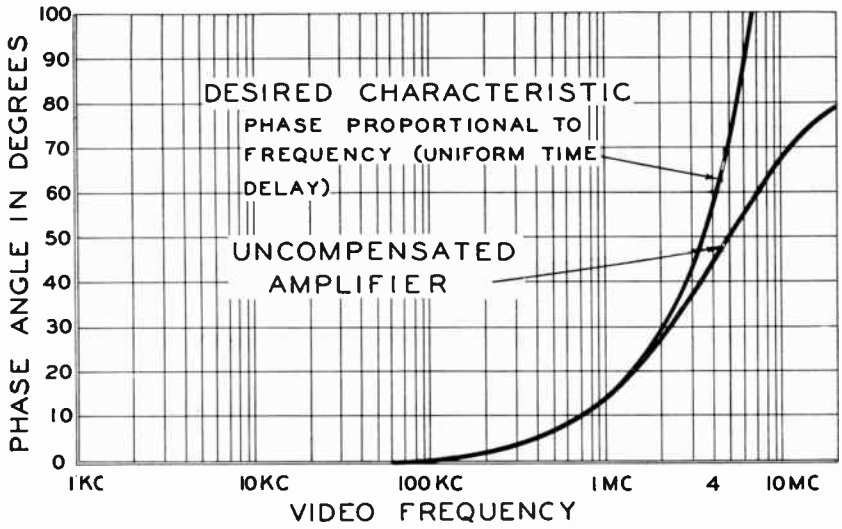

① IDEAL PHASE CHARACTERISTIC - PLOTTED IN LOGARITHMIC COORDINATES

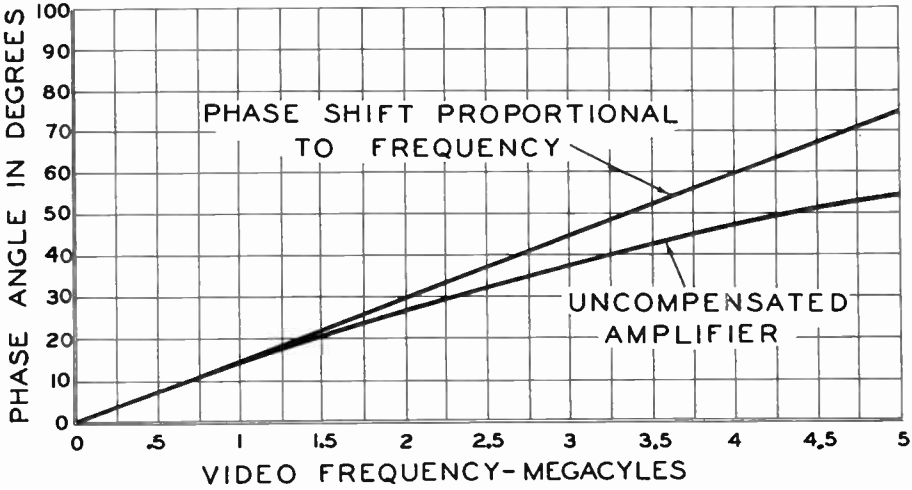

② SAME CURVE AS ① ON LINEAR BASIS

Figure 8.3G. Phase shift requirements of a Video Amplifier for perfect reproduction.

crease, and the product will remain constant. This characteristic therefore is used to express the *figure of merit* of a video amplifier and is stated: Figure of merits = (gain × bandwidth).

Thus if a given amplifier has a gain of 40 with a bandwidth of 2 megacycles, the load impedance could be halved, resulting in a gain of 20 and a bandwidth of 4 megacycles. If a given amplifier has a gain of 20 and a bandwidth of 8 megacycles, the load impedance could be doubled, resulting in a gain of 40 and a bandwidth of 4 megacycles. It is imperative for the maintenance engineer to understand these relationships so that circuit characteristics may be correctly interpreted.

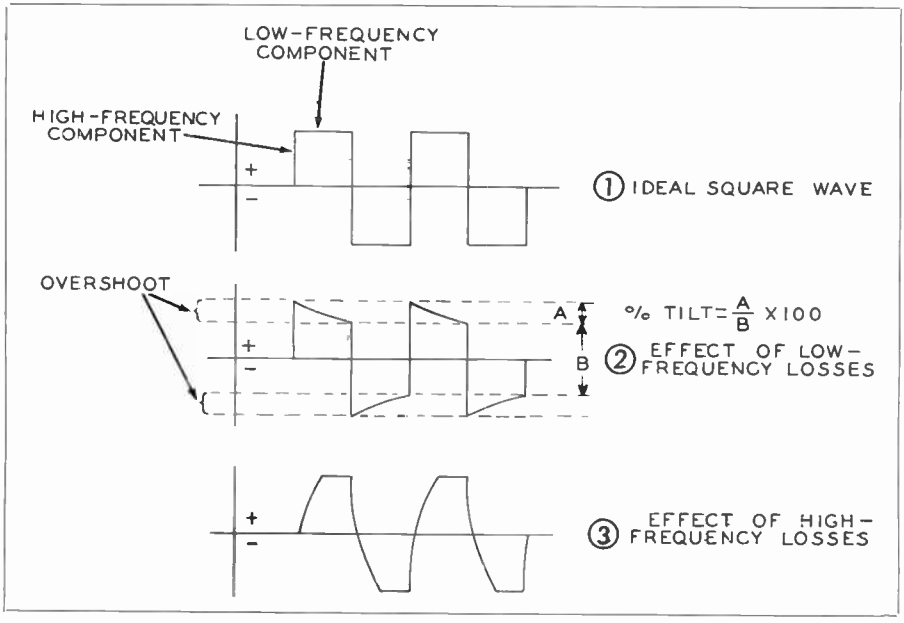

Figure 8.3H.

The low frequency boosting circuits (commonly called decoupling circuits) extends the amplification to the lowest frequencies to be effectively passed, and compensate for the time constant of the coupling circuits which ordinarily attenuate lows and cause phase shift in that region. Peaking circuits boost the highs by compensating effective shunt capacitances in the circuits which ordinarily attenuate high frequencies and cause phase shift in that region. The engineer will find means of adjusting both types of compensation in most video amplifiers. Grid resistors of a stage following low frequency compensation circuits are often found adjustable to allow exact setting of the time-constant with that of the compensation circuit. Peaking circuits are adjustable in several ways as described later.

Shown in Fig. 8.3H are the fundamentals of square wave characteristics in an amplifier. As illustrated in (1), a square wave, regardless of repetition frequency, has both a high-frequency component and a low-frequency component. If the amplifier to which such a wave is applied suffers in low frequency response, the low-frequency component is distorted as in (2). The rise on the leading edge (overshoot) is related to the non-linearity of the phase-shift frequency curve. A common rating given amplifiers at low frequencies is the amount of droop or tilt occurring in this region. The percentage of tilt is the portion A divided by the portion B, times 100. One common specification for overall tilt is a maximum of 10%.

In (3) is the effect of applying square waves to an amplifier with poor high-frequency response. In this case the high-frequency component is distorted with rounded leading and trailing edges, and rounded corners.

Thus far the general discussion has concerned video amplifiers in which the primary purpose is gain of video signal over a sufficiently broad bandwidth. These stages are characterised by relatively low values of load resistance in comparison to the following stage (grid) resistance, with R_L therefore constituting the major portion of total load impedance. A different situation prevails in the output stage of a video amplifier, which is usually terminated

into a low impedance (75 ohm) coaxial line, either for interconnection in the studio equipment, or for feeding lines to the transmitter or the AT&T common-carrier lines. Low impedance lines such as this are essential to hold down shunt capacitance effects which would be detrimental across a higher impedance. A properly terminated coaxial line will reflect a pure resistance to the output stage, avoiding reflections which would result in "ringing" effects in the reproduced picture (Fig. 8.3F).

Video amplifier output stages take one of two general forms, either the cathode-follower, or an especially designed plate-loaded circuit. The great majority of amplifiers which feed another unit in the studio itself use cathode follower outputs. Where the amplifier may be used to feed lines in common-carrier service, the special type of plate loaded circuit is most generally used.

The cathode follower is so termed because the load is connected across the cathode resistance, and the load signal is therefore of the same polarity (follows) as the grid signal. It should be recalled that in the conventional plate loaded circuit with load coupled to the plate of the preceding stage, phase inversion of the signal results. This is so because as the grid signal voltage swings in the negative direction, plate current is decreased (more grid bias) and the signal voltage drop is less across the plate resistor. This causes the coupled point in the plate circuit to become more positive as the grid becomes more negative, thus the signal phase is 180 degrees reversed in phase from the applied signal.

The cathode follower, basically described in section 1.6, is shown in equivalent circuit form in Fig. 8.3I. The primary function is to match a high impedance to the 75 ohm standard impedance of interconnecting coaxial lines and to preserve the proper waveshapes in the video signal. As the grid signal swings in the positive direction, plate current through the cathode resistor increases and the I_pR_c drop therefore increases. As the grid signal swings in the negative direction, the I_pR_c drop is decreased. Thus the load signal follows the input signal and no phase inversion takes place.

The term mu/mu + 1 in Fig. 8.3I is multiplied by the input voltage (E_i) to obtain the generator voltage. The term within the parenthesis is the generator impedance for this equivalent circuit. If the tube is a pentode, the internal plate resistance (R_p) is very large with respect to g_m, and the mu is large. The approximate expression for gain may then be expressed:

$$\text{Gain} \cong \frac{R_c}{R_c + 1/g_m}$$

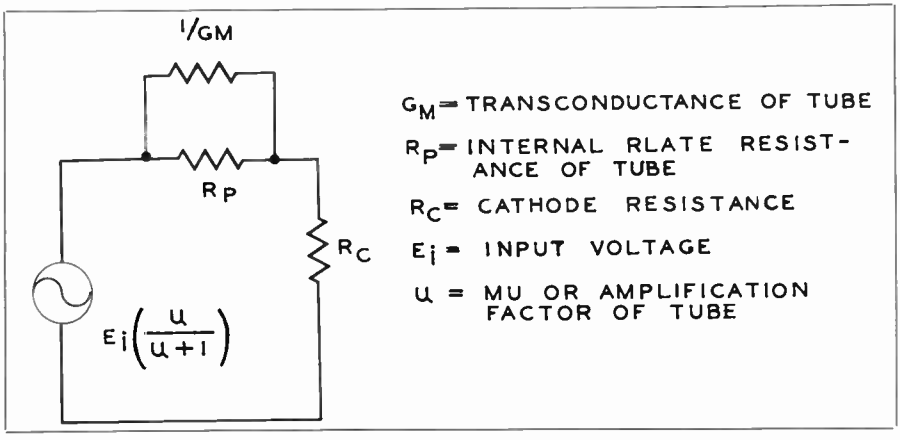

Figure 8.3I. Equivalent circuit of cathode follower.

Thus in the case of a pentode cathode follower, the equivalent generator voltage is approximately the input voltage (E_1) and the internal impedance is $1/g_m$. Thus the quantity of $1/g_m$ is effectively in parallel with R_c.

From the above expression for gain of a cathode follower, it is noted that the denominator must always be greater than the numerator. Therefore the gain may approach unity (same output as input) but never exceed unity. Amplification is not attempted in a cathode follower.

It is important for the maintenance engineer to understand operating characteristics of the cathode follower which may affect frequency response, hence phase distortion. From the above discussion it was pointed out that the output impedance is the effective cathode resistance (effective R_c is the actual cathode resistance in parallel with load resistance at receiving end of coax), in shunt with $1/g_m$. Thus any factor which would affect the transconductance of the tube with applied signal would simultaneously affect the output impedance. As an illustration, suppose that the grid received an instantaneous signal which was of sufficient negative value to cut off plate current. At this instantaneous time, g_m becomes zero, and the generator impedance is theoretically infinite. Thus the output impedance is the effective R_c, and the value of load impedance has changed with applied signal. IT IS VERY IMPORTANT THAT A CATHODE FOLLOWER STAGE BE OPERATED WITHIN ITS NORMAL LIMITS. While this is obviously true of all video stages, the cathode follower is extremely sensitive to limits over which it obtains optimum results. It follows that any slight change in circuit components or the tube itself may require priority attention of the maintenance department.

Since the internal impedance of the cathode follower is $1/g_m$, the effective R_c should nearly match this value for good power transfer. The type 6AG7 tube is commonly used as a cathode follower output in video amplifiers. From tube data sheets, it is found that g_m is 11,000 micromhos. Thus 1/11,000 micro units is approximately 90 ohms. We may see now what affects the "effective" value of the cathode resistance. Since the transconductance of a 6AG7 is relatively high, the value $1/g_m$ is a very small quantity, which is in shunt with R_c. As shown above, this value is about 90 ohms. Fig. 8.3J shows the two common methods of coupling the load to a cathode follower. If the internal impedance of the tube is high in ratio to the required network (for proper matching and optimum power output consistant with required bandwidth) the circuit of (1) is used. If the internal impedance is low in ratio to the required coupling network, the circuit of (2) is used. In either case, which properly matches the cathode-follower to the transmission line, the DC component may be seen to be on the line. The coupling capacitor is almost universally used at the receiving end as shown, directly to the high-impedance grid circuit. This results in optimum performance with negligible capacitive effects across the line.

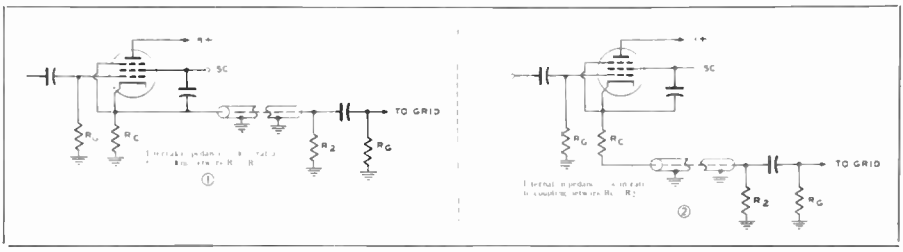

Figure 8.3J. Two most popular types of cathode follower circuits for video amplifiers.

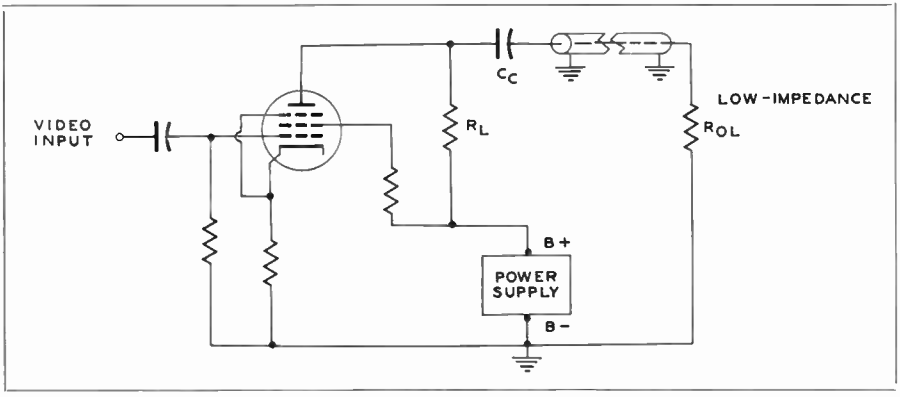

Figure 8.3K. Schematic of typical plate-loaded Video output stage.

Where the cathode follower may be directly-coupled to the line as illustrated (a 75 ohm load coupled to high impedance amplifier at receiving end), the circuit when properly adjusted exhibits excellent frequency characteristics down to and including DC. The fact that DC is on the line works at a disadvantage when an amplifier is used to feed transmission circuits now provided by common carriers (A.T.&T.), since such systems use especially designed broadband transformers which are not capable of operating on DC. The use of a cathode follower to feed such lines would require an extremely large coupling capacitor (to block DC) to couple such a low resistance. The value of such a capacitor would necessarily be in the neighborhood of 2000 microfarads to achieve good low frequency response down to 60 cps between two low-impedance devices. Therefore the engineer will find many amplifiers incorporating a special type of plate loaded output stage. Some manufacturers are using this type of output stage instead of cathode followers in some of the latest equipment, even when designed to feed other units at the studio itself.

Fig. 8.3K illustrates a typical plate-coupled video output stage. In the case of the preceding video amplifier stages already described, the plate resistance R_L was very low in magnitude to the following grid resistor R_g. The time-constant of the coupling network was therefore essentially C_cR_g. In the case of Fig. 8.3K, however, R_L is not negligible since C_c couples into a very low relative resistance in the vicinity of 75 ohms. Therefore the time constant upon which good low frequency response depends is determined largely by R_LC_c. In this case R_L may be made as large as possible consistent with the power supply voltage available.

Design engineers employ a means of ascertaining the *figure of merit* of any coupling circuit at low frequencies. They arrive at this figure by simply adding to the time constant of the circuit the lowest frequency to be passed with good fidelity. This is stated: figure of merit at lowest frequency (LFM) = RfC. In practice, this value should not be lower than 20. From this relationship we may see how the minimum value of the coupling capacitor C_c in Fig. 8.3K may be determined. Remember that the output load R_{OL} will be of low value of around 75 ohms and need not be considered here.

Consider an output stage using an R_L of 5000 ohms. Solving for the necessary value of C_c from the above formula, and considering 20 as the minimum value of LFM: (for 30 cycles-per-sec.):

$$C = \frac{20}{RF} = \frac{20}{5000 \times 30} = 0.000133 = 133 \text{ MFD}$$

Thus C_c in this case will be approximately 133 microfarads. The maintenance engineer will find a C_c of somewhere in this vicinity in the output coupling circuit of any such video output amplifier. Consider now the necessary value of such a coupling capacitor when used at the cathode of a cathode follower which must block DC. From our previous discussion if R_c (cathode resistor) is to match the internal impedance of the tube, and the tube used is a 6AG7:

$$R_c = \frac{1}{g_m} = \frac{1}{0.011} = 96 \text{ ohms.}$$

If we choose the same minimum figure of merit at 30 cps:

$$C = \frac{20}{90 \times 30} = 0.007400 \text{ (approx.)} = 7400 \text{ MFD.}$$

The size of such a capacitor which could withstand even the relatively small voltages encountered would be prohibitive. Thus the reader should now have a reasonable insight as to why cathode followers are not used to feed lines coupling two low-impedance devices where the DC must be blocked from the line.

As a general rule the testing of video amplifiers concerns itself with the high and low frequency ranges. Should tests in these ranges be satisfactory, the mid-band characteristics are assumed to be normal except in very rare instances. The overall response curve of amplifiers at TV broadcast stations is normally relatively flat over a range of at least 6 megacycles.

Remember that the above statement refers to *overall* response. CIRCUITS IMMEDIATELY PRIOR TO CLAMPING STAGES MAY BE DELIBERATELY DESIGNED TO BE DEFICIENT IN LOWS. CIRCUITS IMMEDIATELY PRIOR TO "WHITE PEAKER" STAGES MAY BE DELIBERATELY DESIGNED TO BE DEFICIENT IN HIGHS. The former practice is to help prevent interference from stray AC fields, and the latter practice is useful in increasing signal-to-noise ratios, especially in low-level pre-amp stages.

Testing of video amplifiers for frequency distortion and its direct counterpart, phase distortion, could obviously be carried out by the point-to-point method, using either a VTVM or scope. This procedure involves running the complete frequency response, a single frequency at a time, which is both laborious and time-consuming. The engineer concerned with television broadcast maintenance will find this method outdated in the large majority of installations. The most effective method involves the use of a sweep generator, a detector, a square wave generator, and an oscilloscope. The sweep generator, detector and scope are used to check the high frequency characteristic over 100 kc, and the square wave generator and scope are used to check low frequency characteristics.

A sweep generator consists of a fixed-frequency oscillator whose output is beat with a sweep oscillator frequency modulated at 60 cps. The frequency modulation is such as to cause the beat-frequency to swing over a usable range of about 100 kilocycles to approximately 10 megacycles. The frequency swing may be produced by a conventional reactance-tube circuit with 60 cps excitation from the power line, or in many cases by a motor-drive capacitor in the oscillator tank circuit. A 3600 rpm motor provides a 60 cps sweep of the oscillator frequency. Such a sweep generator usually incorporates an absorption marker generator which places a notch at any reference frequency over the usable range.

The fundamentals of checking high-frequency characteristics of video amplifiers are illustrated in Fig. 8.3L. The frequency-modulated output of the sweep generator consists of a video envelope containing a sweep at uniform rate and amplitude over a range of 100 kc to 10 megacycles, with a tunable frequency marker (notch) placed at any desired frequency. The wave is repeated at regular intervals of 60 cps. This test signal is applied to the amplifier to be

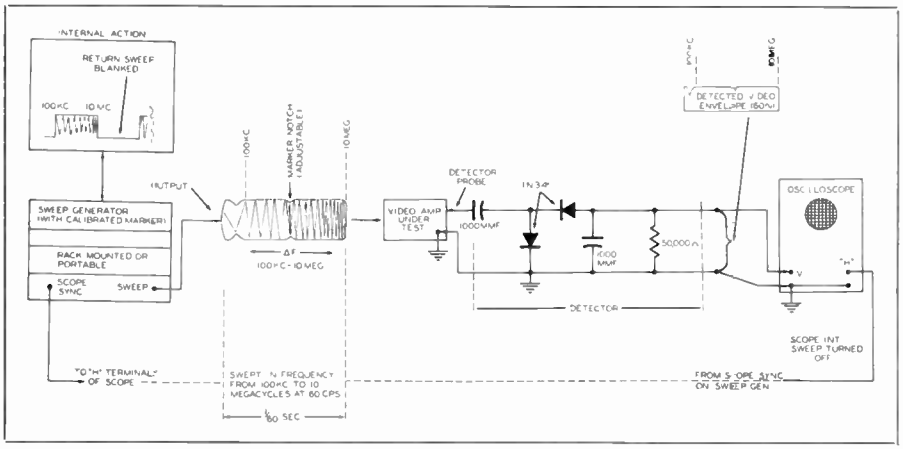

Figure 8.3L. Basic method of testing Video amplifiers for high frequency characteristics.

tested. A detector of the type shown in the Fig. is connected to the output of the amplifier. This rectifies the signal output as shown (in this case the amplifier is considered as a theoretical ideal, no distortion has occurred), and the output of the detector is fed to the vertical input of the oscilloscope. The scope for this test should have excellent low frequency response so that no distortion of the 60 cycle square-wave takes place. High-frequency response need be no greater than 50 kc. By this means the oscilloscope traces a graph of output voltage-versus frequency over the entire passband above 100 kc.

The methods of coupling test equipment to video amplifiers are very critical for correct interpretation of the scope trace. The normal shunt capacitances and impedances must be retained upon test equipment connection to obtain an interpretive trace pattern. The output terminals of a sweep generator provide an impedance designed to be connected to a high impedance grid circuit. No blocking capacitor is used, and the sweep generator must therefore not be connected to any point exposed to DC, since this would damage the output network. Stray capacitance must be avoided in the construction of the diode detector. It is considered good practice to build up several such detectors and probes of varying length, and to use the shortest possible leads for the particular job at hand. The detector probe must be connected across a low-impedance point to avoid loading effects and shunt capacitance troubles.

In practice, the detector is placed across the low impedance output of a video amplifier, which is generally of the cathode-follower type or special low-impedance plate coupled circuit. Fig. 8.3M illustrates the points in question. Since the effect of the transmission line and following video amplifiers should be treated as a separate test, the coaxial line is removed and the output terminals of the cathode follower loaded with a non-inductive 75 ohm resistor. Except in unusual cases mentioned later, the detector may be left in this position for the entire test-run of all stages in the amplifier. The sweep generator may first be connected directly to the grid pin on the cathode-follower stage, point (A) in the illustration. It is very important to apply normal voltage to the input of any stage to be tested so that no saturation effects occur. For example, a cathode follower rated at 2 volts peak-to-peak output will normally require about 3 to 5 volts input, since gain is less than unity. Most sweep generators incorporate a peak meter on the output to indicate amplitude of applied signal which is adjustable by means of an attenuator. Where this is not in-

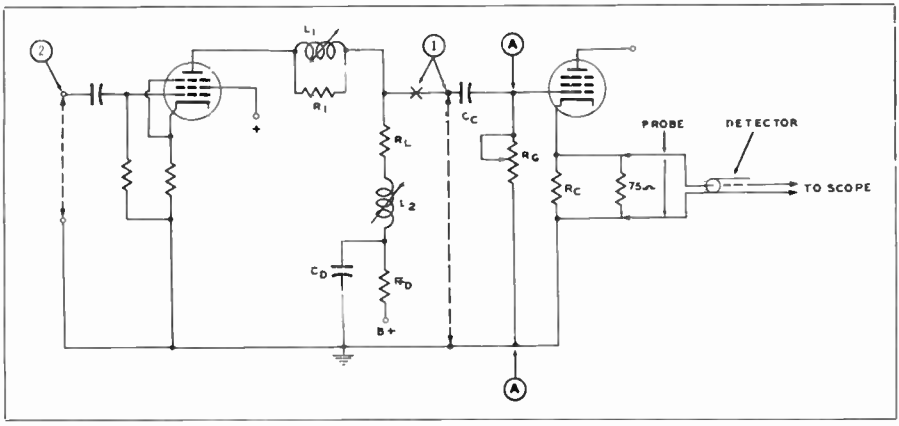

Figure 8.3M. Typical video amplifier with cathode follower output, and methods of connection of test equipment. (See text.)

eluded in the generator, the engineer should use an accurate VTVM to keep this applied signal within the proper range.

Point (1) is an alternative point for test should the action of the coupling capacitor C_c be suspected. In this case the preceding stage must be isolated to avoid contacting the plate voltage with the generator, and to avoid the loading effect of the plate circuit. It is also possible for some instability to occur when a multi-stage amplifier is tested since some feed-back may take place through paths provided by leads from test equipment. Stages must then be isolated by the general method illustrated, opening the circuit at the point marked X in the diagram. Such maintenance procedure is only necessary when definite trouble must be traced down in the amplifiers. With modern commercially built test equipment and probes, instability from test lead interconnection seldom occurs.

By leaving the detector probe connected across the output, the generator may be connected to each preceding stage in turn, and overall characteristics noted. Peaking coils are often adjustable in commercial broadcast equipment, as are some grid resistors. Fig. 8.3N shows typical patterns obtained on the scope for any single deficiency existing in the amplifier. Assume that the sweep generator is connected at point (2) in Fig. 8.3M, with the detector and scope still connected at the cathode follower as shown. It is also assumed that the cathode follower has tested in good condition as in (1) of Fig. 8.3N. In practice, the marker notch is set by means of the calibrated marker dial to occur at the point on the curve where the decided slope toward cut-off is noted. If the dial then reads 7 megacycles, the response is flat from 100 kc to 7 megacycles. A minimum of 6 megacycles is considered necessary in broadcast station equipment to assure minimum fre-

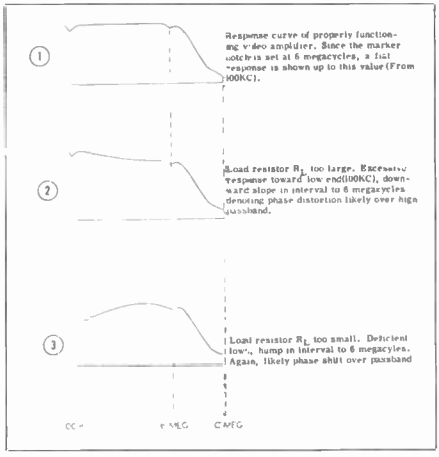

Figure 8.3N. (1) (2) (3) Effect on R_L of demodulated sweep generator test signal.

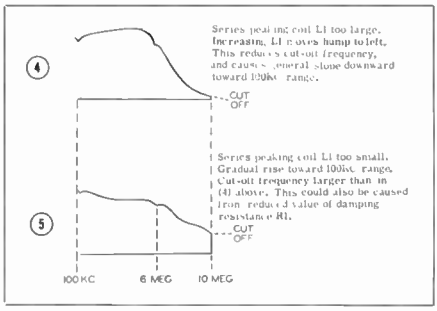

Figure 8.3N. (4) (5) Effect of series peaking coil L_1 in Figure 8.3M.

quency and phase distortion, although a flat response to 5 megacycles is tolerated when necessary. Most modern commercial equipment tests well over 7 megacycles in many instances.

If the plate load resistor R_L should increase from normal value to a higher resistance, the trace obtained would be similar to (2). From the curves of Fig. 8.3C it was noted that a higher value of coupling resistance causes a departure from flat response at both high and low frequencies. In this case we are observing the high passband from 100 kc to 6 megacycles (in this example), and the droop toward the upper end of the band is noticeable. If the slope is very pronounced, phase distortion is bound to occur, and loss of resolution is apparent in the pictures. Although this effect might be caused by an actual change in the value of R_L, such is not necessarily the sole cause. Anything that would affect the dynamic plate load so as to increase its effective load impedance over the passband would have the same results. For example, observe (9) of Fig. 8.3N. This is essentially the same trace as (2), and is caused by a reduced value of the inductance of the shunt peaking coil L_2 of Fig. 8.3M. Since this coil is part of the designed plate load, insufficient inductance causes an increase in effective plate load impedance. This may seem contradictory to the reader and will be clarified before going further.

When engineers designed the shunt peaking coil, its reactance at the highest pass frequency was made to equal approximately one-half the value of the reactance of the total output and input shunt capacitance whose effect the peaking coil must nullify. The total plate load impedance is a complex quantity rather than pure resistance, and takes the conventional value:

$$Z_L = \sqrt{R^2 + (X_L - X_C)^2}$$

Assume just as an illustrative example that the total shunt capacitive reactance at the highest pass frequency is 2000 ohms. With X_L equal to one-half this value, or 1000 ohms (with 1000 ohm R_L):

$$Z_L = \sqrt{(1000)^2 + (1000 - 2000)^2} = \sqrt{10^6 + 10^6} = 1415 \text{ ohms (approx.)}$$

Thus with an R_L of 1000 ohms, and normal shunt-peaking coil reactance of ½ the value of total X_C at the highest frequency, the total plate impedance at this highest frequency is 1415 ohms.

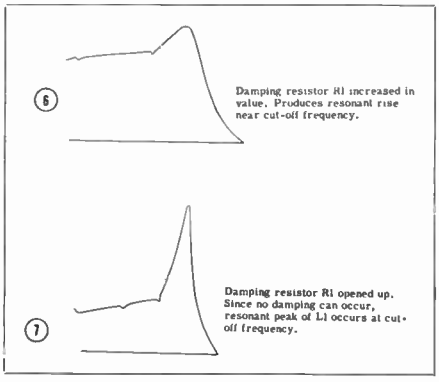

Figure 8.3N. (6) (7) Effect of damping resistor R_1.

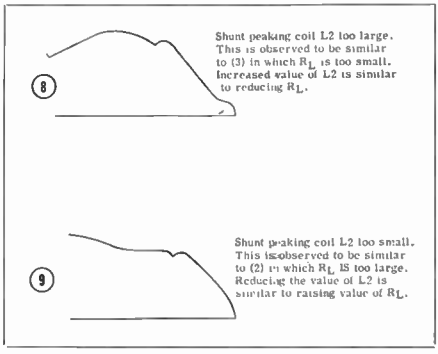

Figure 8.3N. (8) (9) Effect of shunt peaking coil L_2.

(This is not a typical value but is used for illustrative purposes only). Now consider what occurs should the inductive reactance be reduced by one-half its normal value. Obviously the difference in the quantity enclosed in the reactive parenthesis of the equation becomes larger, since X_C remains the same. To be explicit:

$$Z_L = \sqrt{1000^2 + (500 - 2000)^2} = \sqrt{10^6 + (2.25 \times 10^6)} = 1802 \text{ ohms (approx.)}$$

and it is observed that Z_L has increased with decrease in shunt X_L.

Understanding of these basic circuit relationship materially aids the maintenance engineer in interpreting resultant scope traces. In (3) is a typical trace when R_L has decreased from normal value. Observation of (8) in which L_2 is larger than optimum value reveals effect on plate load impedance at the higher frequencies, effectively decreasing the value of R_L. The nature of the traces are therefore similar.

The effect of the series peaking coil is shown in (4) and (5). When L_1 is larger than optimum value (4), a gradual upward slope occurs from 100 kc (low end of sweep) toward mid-range of sweep. The larger the value of L_1, the farther to the left is the hump shifted. Compare this to (3), which indicates R_L too low in value. The major difference in the resulting traces is the extremely reduced cut-off point (maximum downward slope of curve) indicated in (4), with L_1 too large. This causes the notch to "slide down" on the sloping portion of the curve at the high end. From the slope of the response curve of (4), it may rightly be inferred that the effective R_L is reduced as the series peaking coil is increased in value, just as in the case of the shunt peaker. Increasing the value of L_1 lowers the resonant frequency (greater LC ratio) at which the series peaker performs. (Review section 2.4). This causes the hump in amplitude response to move to the left (lower in frequency), and the effective Z_L at the highest frequencies in the desired passband is reduced.

As shown in (5), if the series peaker is too small in value, the response from 100 kc to midrange of the sweep is too large, and the cutoff frequency is larger. This condition may also be caused by a reduced value of damping resistor shunted across L_2.

The effects of increased values of damping resistance is noted in (6) and (7). In (6), the resistance value has increased to the point where inadequate damping of the resonance peak occurs. This is one possible symptom of transient oscillation producing a picture as shown in Fig. 8.3F. The trace in (7) indicates an open damping resistance which allows the resonant peak to appear.

The peaking circuits of most video amplifiers are adjustable as indicated by the variable inductances in the schematic of Fig. 8.3M. The proper alignment of these stages constitute an important function of the maintenance engineer both upon initial setup of the amplifiers, and in routine and priority checks of equipment. With the sweep generator connected at point (2), Fig. 8.3M, the effects of varying the adjustments of L_1 and L_2 may be noted. It will be observed that varying the series peaker L_1 mostly affects the trace to the right of the pattern, and varying L_2 will mostly affect the trace through the center of the pattern. The marker notch frequency should be set so that it appears at approximately the assumed limit of the flat portion of the curve, such as 6 or 7 megacycles. If, upon varying L_1 the peak starts moving to the left, the adjustment should be made in the opposite direction to obtain as flat response as possible. L_2 is similarly varied while observing the scope pattern, and adjusted to obtain optimum response characteristic closely resembling (1) of Fig. 8.3N. No more than approximately 2% variation should occur over this high-pass band from 100 kc to the limit of the flat portion of the curve.

The typical traces shown in Fig. 8.3N assume only one component error as is usually the case in preventive mainte-

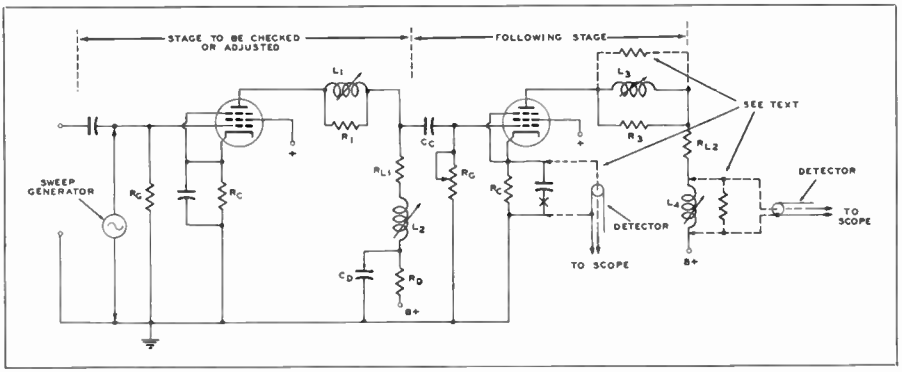

Figure 8.3O. Dotted lines indicate modification necessary for two different means of checking an intermediate video stage. (See text.)

nance or in trouble occurring during operation. If a number of amplitude variations show up in the pattern, several errors may exist simultaneously. In this case the engineer familiar with effect of any given adjustment on the corresponding pattern will establish a basis from which to proceed. It is very important that the setup of test equipment and test leads produce no spurious response on the screen. Experience with any particular installation is necessary before the engineer can readily determine "normal" and "abnormal" appearance of any slight spurious trace.

Only two stages are shown in Fig. 8.3M. In amplifiers employing more stages, the above process is repeated back through the circuits to the input terminals of that particular amplifier. It may be desirable in some cases to check an intermediate stage individually. This may be done as indicated in Fig. 8.3O, by temporarily converting the stage following the one to be checked to a cathode-follower, or low-impedance plate coupled circuit. If the cathode resistor is in the vicinity of 100 ohms, as is often the case, the bypass capacitor (if one is used) is temporarily removed and the detector connected across this resistor. This stage then acts as a cathode follower. If the cathode resistor is higher in value than 100 ohms, it is preferable to use the alternative method shown. The peaking coils are shunted with a 100 ohm resistor across each coil, and the detector may then be connected across either one of these resistors. In this case, the stage is acting as a low-impedance plate coupled circuit. The sweep generator is then connected across the grid circuit of the stage to be checked or adjusted. Checking stages individually in this manner is often a necessity, especially when a tendency to regenerate or oscillate is noted when attempting to check the entire amplifier from the output stage. This sometimes occurs in high-gain video amplifiers when test equipment is connected.

Many video amplifiers in the system employ circuits where blanking and sync signals are injected, and where clamping is employed. These stages require special technique in testing procedure. Fig. 8.3P presents a simplified diagram of sync insertion, feeding a cathode-follower output stage, the grid of which is clamped. This might be a typical arrangement of a mixer-amplifier unit following the switcher stage, or of a line output amplifier in which sync-insertion takes place. Point (1), the clamper stage, is our first consideration. From the inherent nature of clamping tubes, considerable capacity is added to the circuit at that point. Thus they cannot be removed without upsetting circuits constants which would seriously affect normal operation of the output stage. Neither can they be left in without special arrangements con-

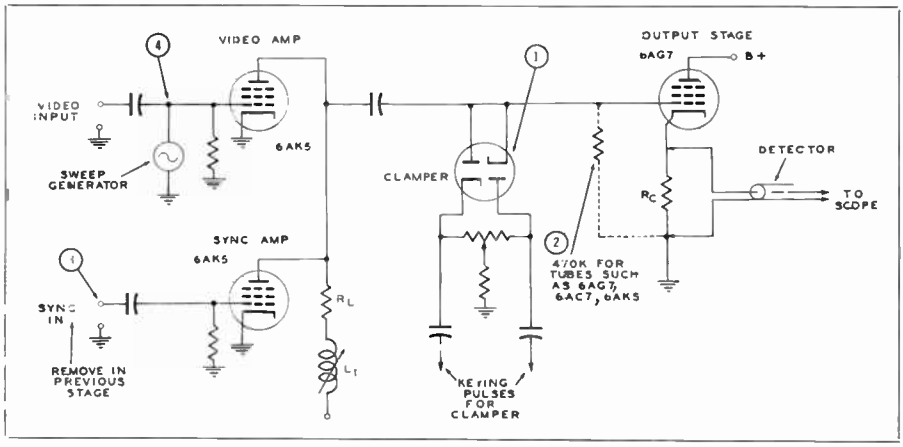

Figure 8.3P. Typical sync injection and clamping circuit.

sidered later. This is true because the resultant clamping pulses would give spurious response in the output since the sweep generator contains no blanking pulses upon which the clamper normally operates. For this reason it is necessary to replace the clamper with the same type tube, but with the heater circuit opened by cutting off the heater pins. These "dummy" tubes should be plainly marked in some fashion such as with paint or finger-nail polish so that they will not inadvertantly be left in place after testing. When the clamp is immobilized in this way, the grid of the output stage is left floating. It is then necessary to insert temporarily a grid resistor at point (2) of the diagram. A value of 470,000 ohms is proper for such common tubes as the 6AG7, 6AC7, and 6AK5.

The sweep generator may be connected at point (4) for the purpose of checking this stage and aligning shunt peaking coil L_1. In this stage, another condition must be considered. Sync pulses are usually inserted as shown by an amplifier sharing a common plate load with the video amplifier. Aside from the capacitive effects of the sync amplifier on the video amplifier, the video amplifier steady-state plate voltage is dependent upon the load current drawn by the sync amplifier stage. Sync pulses injected into the video amplifier, however, must not be allowed since the resultant patterns would be meaningless for the purpose of this test. To maintain normal circuit conditions, the sync amplifier tube obviously cannot be removed. If the amplifier simply has a plug-in connection for the composite sync signal, this may be removed during the test. If the amplifier is rack-mounted and receives sync from a distribution bus common to a number of amplifiers, the signal should be "killed" in the stage prior to point (3) by use of a dummy tube. Should point (3) obtain its drive directly from a sync distribution bus, it is necessary to break the connection temporarily at this point.

In amplifiers such as those found in camera control units, blanking injection circuits occur. This injection usually takes the same form as sync injection circuits described previously, in which the blanking amplifier shares a common plate with a video amplifier stage. Thus the same precautions must be taken, and blanking pulses "killed" in a previous stage. One added precaution is necessary here. The blanking amplifier may be driven by only ½ of 6SN7 twin triode, the other half of the tube performing some other necessary function. In this case, the dummy tube must retain the heater connection, and the grid, plate, and cathode pins of the proper half-section

removed. As previously mentioned, such tubes should be prominently marked in some way to avoid leaving them in the circuit after tests are completed.

Thus far the testing of the video amplifier has concerned only the high passband from 100 kc to the limit of the flat response around 6 or 7 megacycles. Low frequency response of the amplifier is checked with the oscilloscope and a square-wave generator. This generator should be capable of outputs in at least two ranges: at 60 cps, and 7.5 kc.

The general procedure is the same as outlined above for high-frequency testing. The oscilloscope is connected across the low-impedance output stage of the amplifier (no detector is used in this test), and square waves of the proper range applied to the grid of the stage. The signal is then applied to each preceding stage progressively toward the input stage until the entire amplifier is checked.

The low-frequency square wave tests (60 cps) are applied only as overall amplifier checks, or individually to those stages immediately following a clamping circuit. Stages prior to the clamper are usually intentionally designed to have a low-frequency response which starts well above the power-line frequency of 60 cps. This reduces effects of low frequency microphonics in tubes, and stray 60 cps field pickup. These previous stages, however, should have a substantially flat response starting at around 150 cps. The 7.5 kc square wave is used to check this response. If an amplifier passes a 7.5 kc square wave with less than 10% tilt (see Fig. 8.3H-2), good phase response down to 7.5 kc is indicated, which implies good amplitude response down to about 1/50th of this value, or 150 cps. (A square wave is composed of a large number of odd-order harmonics). Circuits preceding clampers which are intended to have poor lows do not employ the low-frequency compensation circuits which other stages use.

Clamped stages and those immediately following, or any stage which employs low-frequency compensation, should pass a 60 cps square wave with less than 10% tilt. Variations from this optimum value exist in practice, and a tilt of a 60 cps square wave may be as high as 20% (overall amplifier) and still result in satisfactory operation. These conditions will be pointed out in the specific sections which follow later concerning the camera, control units, etc. Low frequency testing aids in aligning any stages which employ adjustable grid resistors as in Fig. 8.3M and Fig. 8.3O, since low response is determined by the time-constant of the interstage coupling networks.

8.4 Basic Techniques in Pulse Measurements

The maintenance engineer is concerned not only with video amplifier frequency-phase response, but also with measuring amplitude, time, duration, and shaping forms of sawtooth, square and rectangular pulse waveforms. Application of pulse-measuring technique must be made in observing sync generator performance, driving, blanking and sync pulses wherever they occur in terminal equipment, clamping pulses, and sweep circuits. All such measurements depend primarily upon the proper application of special types of oscilloscopes which should be a part of every maintenance department setup.

It was noted from the preceding section that oscilloscopes used for sweep-generator tests need not have vertical amplifiers of extremely broad band characteristics. For adequately measuring all pulses used in TV, however, this characteristic must be flat from several cycles to 5 or 6 megacycles. Some of the larger stations employ scopes with a vertical amplifier usable up to 16 megacycles. While these are highly desirable for accuracy comparing to laboratory work, a scope with a vertical amplifier reasonably flat to 5 megacycles is very useful in pulse-measuring techniques for television broadcast systems.

The maintenance engineer must first acquaint himself with the characteristics of the instruments which the station uses. The lower limit of the verti-

cal amplifier in the scope determines the maximum pulse width that can be displayed without distortion. The upper limit determines the minimum pulse build-up time that can be displayed without distortion. Therefore the engineer should observe the pattern produced on the scope when it is connected to a square-wave generator known to be good. The interconnecting leads or probes used should be the same as those to be used when checking faulty equipment. Only in this way can the engineer interpret patterns correctly for his particular installation.

The extra capacity added by test instrument leads is extremely critical in measuring pulses, and the utmost caution must be exercised in holding this capacitance to the absolute minimum values. As a rule only commercially-built probes are used, which are especially designed and constructed to compensate for stray capacitance added by test leads. One such method is shown in Fig. 8.4A. The probe contains an RC divider network in which R_1 is much greater than R_2. The capacitor across R_1 is adjustable by a slotted-shaft arrangement. C_2 represents the total shunt capacitance of the arrangement. The frequency and phase response of the network is uniform at any frequency when the relationship $R_1/R_2 = C_2/C_1$ is maintained. Thus the loading capacity is reduced, but the voltage at the input of the scope is likewise reduced from the voltage-divider action of R_1 and R_2. This is not serious for pulse voltages encountered in TV systems

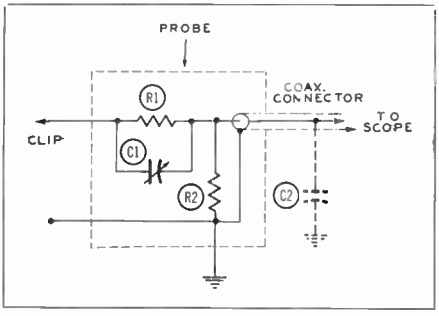

Figure 8.4A.

when using a high-gain vertical amplifier in the oscilloscope.

The sweep circuits used in wide-band oscilloscopes employ "hard tube" circuits (to distinguish from the more familiar gas-tube) employing multivibrators synchronized either internally, externally, or by the test signal itself. The sawtooth generator is driven from the multivibrator. In some cases the rise or fall time (leading and trailing edges) of the pulse is lost in the pattern due to the limited starting time of the sweep. To avoid this difficulty, many scopes employ "delay lines" in the vertical amplifier, which produces a signal delay slightly greater than the starting time of the sweep. Thus the pulse appears on the screen after the sweep has been initiated, and the build-up time is discernible on the trace.

A timing calibrator which places visual markers on the screen at specified time-intervals is also generally employed in such oscilloscopes. These may be narrow pulses applied to the CRO grid in sync with the sweep, so that dark-spots occur on the trace at the time intervals. Another method which is often used when an external marker generator is employed is to mix the marker pulses with the test signal in the vertical amplifier, in which case "pips" occur on the trace. This type of marker is also often built-in on the oscilloscopes.

It is often desirable to measure the peak-to-peak voltage of an observed pulse. This is accomplished by use of either an external or built-in voltage calibrator. This instrument is connected to the vertical-deflection amplifier and a pulse of known input voltage appears on the screen. A voltmeter calibrated in peak-to-peak values continuously measures the output of the voltage calibrator. Thus when this voltage is adjusted to result in the same amplitude as the pulse being observed, the voltmeter reads the pulse value directly in peak-to-peak volts.

As an example of pulse measurement technique, consider a typical clamping circuit to be tested. It is recalled that

the clamper is a particular form of DC restorer circuit (section 2.5 and 3.4). The simplest form of DC restoring circuit is that used at the kinescope tube or CRO waveform monitor which operate when the reference level corresponds to a peak value higher than the maximum signal amplitude. In the case of the clamper, the reference level is not necessarily the peak value (such as sync peaks), but may be a lower value, such as the blanking level of the television signal. These circuits are used at various points in the terminal equipment wherever the effects of hum and noise impulses must be held to a minimum. Thus a clamper is "keyed" to function in the manner necessary for that particular circuit.

In any case, the clamper should hold the clamped point at a constant bias at the desired reference level. A very common form of clamping at both studio equipment and transmitters is known as "back-porch" clamping, in which the clamped point is held at the blanking level of the signal. To do this, the clampers are keyed from a sync pulse of the line waveform in such a manner as to cause the clamping tubes to refer to the reference level which immediately follows, this being the blanking or pedestal voltage upon which the sync pulse is constructed. Fig. 8.4B is a simplified schematic of one of the clamping circuits in the General Electric Stabilizing amplifier (described and illustrated in section 6.6 and in following section 8.7). Tube V18 is a sync-clipper stage which has removed the sync pulses from the composite picture signal. This amplified sync is fed to the grid of V19A, which is observed to have its grid resistor returned to the well regulated B plus supply of 275 volts. The coupling capacitor is very small (47 mmf), so that the resulting grid current of V19A charges the coupling capacitor during the rise of each sync signal. The output of the sync amplifier at point (1) is positive. At the trailing edge, during the negative going excursion, a large negative overshoot occurs which drives the grid of V19A momentarily below cut-off (point 2). Between sync pulses the tube returns to zero bias by charging toward B plus through the grid resistor. This condition prevails until the next sync signal occurs. During this interval, a positive pulse is formed at the plate of V19A. From the negative overshoot at point (2), it is seen that the positive pulse occurring at the plate of this stage is coincident with the trailing edge of the sync pulse. (See waveform at point 3.) Thus pulse is amplified, inverted and clipped by V19B (see waveform at point 4), and used to drive the clamp keying tube V20A. Since the pulse applied to V20A is negative, the signal at the plate of this stage (point 6) is positive, while that at the cathode (point 5) is negative. These pulses are applied simultaneously to the clamp diodes V21 and V22.

Remember that it is the function of these diodes to short the grid at point (8) momentarily at the line frequency of 15,750 cps (section 3.4). The keying pulses at point 21 are positive while the simultaneous keying pulse at point 22 is negative. At the instant these pulses arrive, if point (8) is the same potential as (7), current will flow around through the diodes and resistors R21 and R22, since the condition for conduction (plus charge on plate, minus charge on cathode) has occurred. Since the diodes and resistors are of equal values in the two branches, equal voltage drops occur. The potential at point (7), is therefore midway between that at point 21 and 22, and the grid potential (8) remains equal to that at (7).

If, when the clamping pulses are applied, point (8) is at a higher potential than point (7), it is seen that V22 will conduct while V21 is cut-off. This drains the excess potential from point (8). When point (8) again becomes equal to (7), the action becomes that described previously. Conversely, if the point (8) is at lower potential than (7) when clamp pulses occur, V21 conducts and restores the grid potential to that at (7).

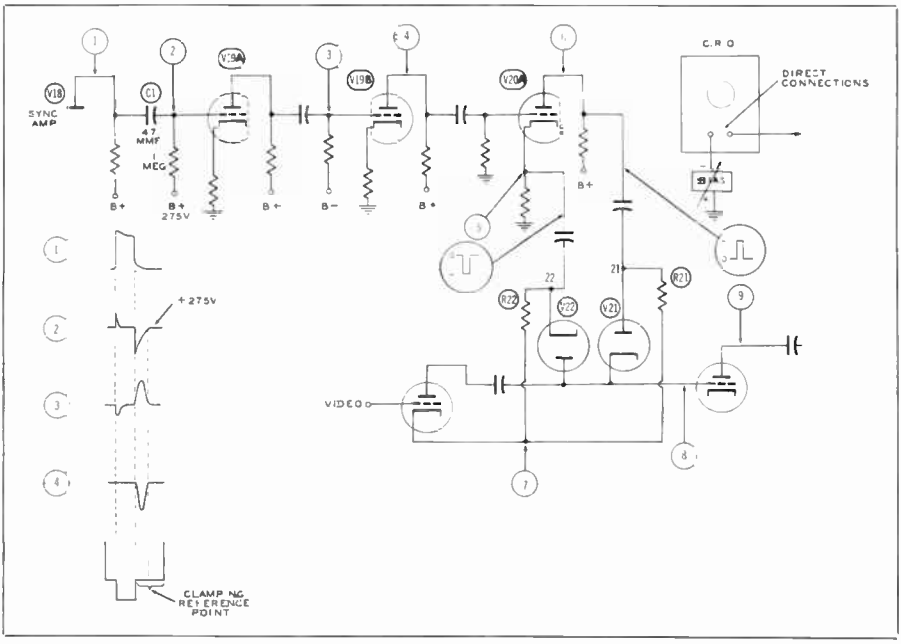

Figure 8.4B.

In checking the action of a clamper, since the important characteristic is the DC component, the oscilloscope must use the direct connection to the CRO. The most convenient point of checking overall action is point (9) which is the plate circuit of the stage whose grid is clamped. It is necessary to center the sweep beam (with sync and blanking signal applied as in a composite all-black signal), and if the plate potential deflects the CRO sweep off the screen and the beam cannot be centered, it is necessary to use an external bias as shown. This, of course, removes the scope chassis from ground and caution must be exercised in its use to avoid grounding contact. Only enough external positioning bias is needed to sufficiently neutralize the static potential so that the centering control in the scope is effective.

With the beam thus centered, and with blanking and sync pulses at their respective reference lines for the all-black signal, a mixed black and white video signal is applied and scope sweep-frequency adjusted to display the line frequency of 15,750 cps. The blanking level should occur at the same center position on the screen provided the clamper is properly working. If clamping pulses are out of sync, the video will be hopelessly chopped to pieces by the random clamping pulses. If the clamp is completely inoperative, the grid at point (8) is effectively shorted and no signal occurs. Emergency operation such as might be necessary in the field could be carried on by removing the clamper tubes and inserting a fixed bias at point (8). Obviously this condition would require constant attention to all picture controls and overall performance is poor.

Faulty clamping action may be checked back through the clamp keying tube circuits and clamp pulse-former circuits by following the points in Fig. 8.4B. Since pulses are now to be displayed, the vertical amplifier of the scope is used with sweep set to display the line frequency of 15,750 cps. Tubes are always suspected first, and it is advisable to change all tubes in this chain to ascertain their effect on the clamp-

ing action. If this does not clear the trouble, the scope is connected at the points shown until the first serious deviation from the indicated waveforms occurs. The resistors and capacitors for that circuit, and in some cases in the preceding or succeeding stage, are checked point-to-point for component failure, by conventional methods.

It is sometimes desirable to check the current waveform through an inductance such as a deflection yoke. When this is necessary, the yoke terminal point should be disconnected and a low value of resistance in the vicinity of 10 ohms inserted in series with the yoke circuit. The scope may then be connected across this resistor and the current waveform displayed on the screen.

If the engineer retains in his mind the effect of real or apparent resistance-capacitance values upon the resultant wave-shapes, interpretation of scope patterns becomes practically automatic with practice. The time-constant of any resistance-capacitance is their product, or RC. In curve (1), of Fig. 8.4C(1), the voltage rise across C for a *short* time constant is shown. Curve (2) depicts a longer time-constant, and curve (3) illustrates a still longer time-constant. It is noted that the shorter the RC product, the greater the amplitude of the instantaneous voltage (e) in a given charging time (ΔT). The longer the time constant, the less the amplitude of the instantaneous (e) developed in a given time, but the slope is more gradual and practically linear in the low region. Another way of visualizing the effect is to consider that the less the charging time for a given RC, the greater the linearity of the charging (e) across the capacitor. Thus the higher the frequency for a given time-constant, the more linear the de-

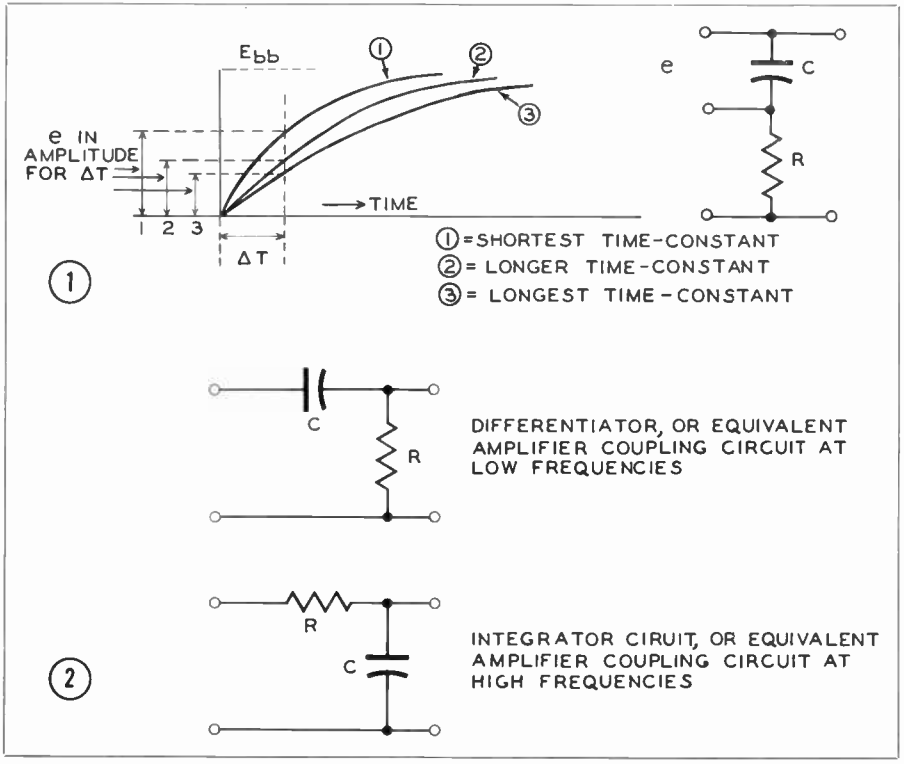

Figure 8.4C. (1) Effect of time constant on voltage appearing across "C" in an RC circuit. (2) Time constant = RC, where TC = seconds, R = megohms, C = microfarads.

veloped voltage. The two common arrangements of RC is shown in Fig. 8.4C(2). When the time constant is sufficiently short to affect the shape of the applied voltage wave, the circuit takes the form of a differentiator or integrator circuit as shown. Note also that the differentiator circuit is an equivalent circuit of any coupling network between amplifiers at the low frequencies. The integrator circuit takes the form of an equivalent circuit at the high frequencies. (Preceding section 8.3.)

Fig. 8.4D illustrates a fixed value of resistance (10,000 ohms) with three different values of capacitance to result in time-constants of 1000, 100, and 10 micro-seconds respectively. Note that in the longest time-constant circuit (1000 micro-sec) the voltage output across the capacitor (integrator voltage) is low in amplitude and strictly linear in nature. This is borne out in the curve of (3) in Fig. 8.4C(1). The voltage output across the resistor (differentiator voltage) is only slightly affected in slope of the flat top. The other two time-constants show the effect upon the applied wave, corresponding to the (capacitor) curves of Fig. 8.4C(1). It is also helpful to remember that, as observed in Fig. 8.4D, the polarity of the integrator voltage remains the same on the charge-discharge interval, while the differential voltage is driven in the positive-negative directions.

In circuits where wave-shaping is highly important, some variable element providing adjustment of this time constant is usually employed. It should now be clear why it was emphasized in section 8.2 that all variable controls be noted and maintenance checks carried out on any circuits in which controls are aproaching an extreme end of the range provided. Capacitors or resistors, or both, may change in values over a period of time which seriously impair waveshape and/or linearity of form.

Pulse measurements are very helpful in preventive and priority maintenance of multivibrators and blocking-oscillators. Such circuits, being widely used in cameras, monitors, sync-genera-

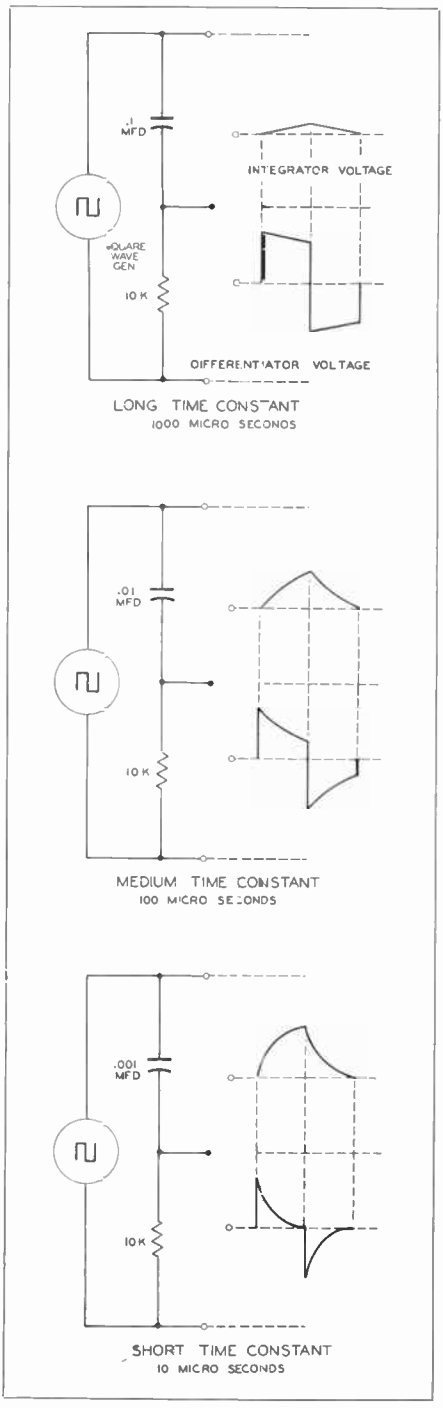

Figure 8.4D. Examples of time constants and their RC Waveforms.

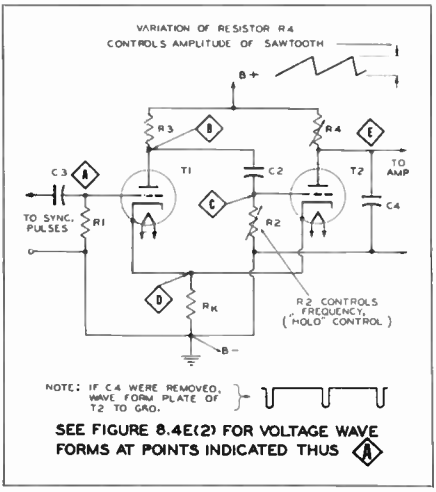

Figure 8.4E. (1) Cathode-coupled multivibrator as Sawtooth wave generator.

tors, etc., occupy considerable time in the maintenance division. Most of the manufacturers instructions accompanying such equipment include waveforms which should be present at the various pin terminals, and the peak-to-peak voltage which should prevail. IT IS VERY IMPORTANT FOR THE MAINTENANCE ENGINEER TO RUN ALL SUCH CHECKS WHEN THE EQUIPMENT IS IN GOOD WORKING ORDER. In this way he learns to observe "normal" patterns for his particular equipment used in testing, and any deviations in peak-to-peak voltages from those listed. The makers themselves admit that such values shown are only representative, and no strict conformity can be guaranteed for all circuits involved.

Fig. 8.4E(1) illustrates a cathode-coupled multivibrator in a typical sawtooth wave generator. The scope sweep frequency is adjusted to display several cycles, the sweep frequency depending upon whether the saw is at line or field frequencies. Fig. 8.4E(2) shows representative waveforms obtained at the points designated. (The fundamentals of multivibrator and blocking oscillator circuits were presented in section 2.3.) At point A may be observed the negative sync pulses applied between grid and ground of T1. Without these sync pulses, the circuit is free-running with a natural frequency (adjustable by R2), which is slightly lower than the desired frequency of operation. Application of the negative pulse adds to the grid bias already existent from R_k causes the plate current of T1 to reduce. The resultant decreased voltage drop across R3 raises the plate voltage of T1, and this positive pulse (point B) is coupled to the grid of T2 through C2. Thus T2 is pulsed from cut-off into conduction (point C) initiating the retrace slightly earlier than would have occurred if left in the free-running condition. Thus the free-running oscillation is raised slightly to the desired frequency by the sync pulse. The waveform at point D is that occurring across the common cathode resistance R_k at the retrace intervals. The waveform across the output capacitor C4 (saw-forming capacitance) is indicated in drawing E. Also indicated in Fig. 8.4E(1) is the waveform which would be observed if C4 were opened.

Variation of resistor R4 varies the time-constant of R4C4, and therefore varies the amplitude across the saw-forming capacitor C4. Increasing R4 (longer time constant) decreases the amplitude of the output (Fig. 8.4C). Similarly, decreasing R4 (shorter time-constant) increases the amplitude of the output. This adjustment also slightly affects the frequency if R2 is left undisturbed, since the plate voltage of T2 is affected which, in turn, affects the length of time which T2 is cut-off.

The effect of C4 is the same as above, since any change in capacitance affects the time constant. For example, if C4 should radically decrease in value (shorter time constant) the amplitude of the saw would be large, with poor linearity (Fig. 8.4C). Thus if the amplitude must be cut-down by rotating R4 to its extreme maximum "off" position (maximum resistance), the resulting linearity may be poor and any subsequent linearity controls may not be able to correct the waveform.

If the design of the circuit is such

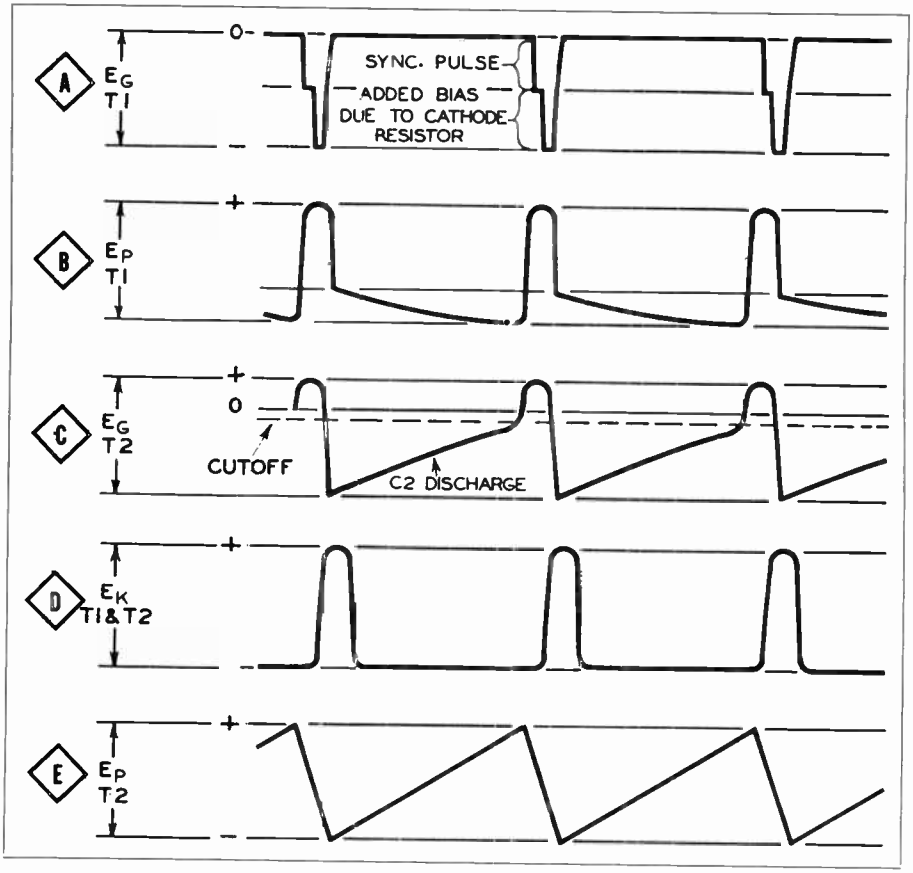

Figure 8.4E. (2) Voltage waveforms in Cathode — coupled multivibrator.

SYMPTOMS	PROBABLE CAUSES (Tubes assumed good)
Completey inoperative.	Check power supply terminals, continuity of wires. C4 opened or shorted. R3 or R4 opened. R_k shorted or seriously decreased. Open or shorted C2. Open or shorted R2. Radically changed value of R1.
Poor synchronization. Will not lock-in by hold-control.	Radical change in value of R3. Insufficient applied sync amplitude. Large change in value of C2 or R2. Lowered value of R1.
Insufficient output amplitude.	Defective R4. Decrease in value of C4. Improper voltages from power supply. Radically decreased value of R3.
Poor linearity.	Seriously decreased value of R4. Decreased value of C4. Large increase in R_k. Improper applied voltages. Applied sync amplitude too large.

Figure 8.4F. Most common symptoms and probable causes for multivibrator circuit shown in Figure 8.4E(1).

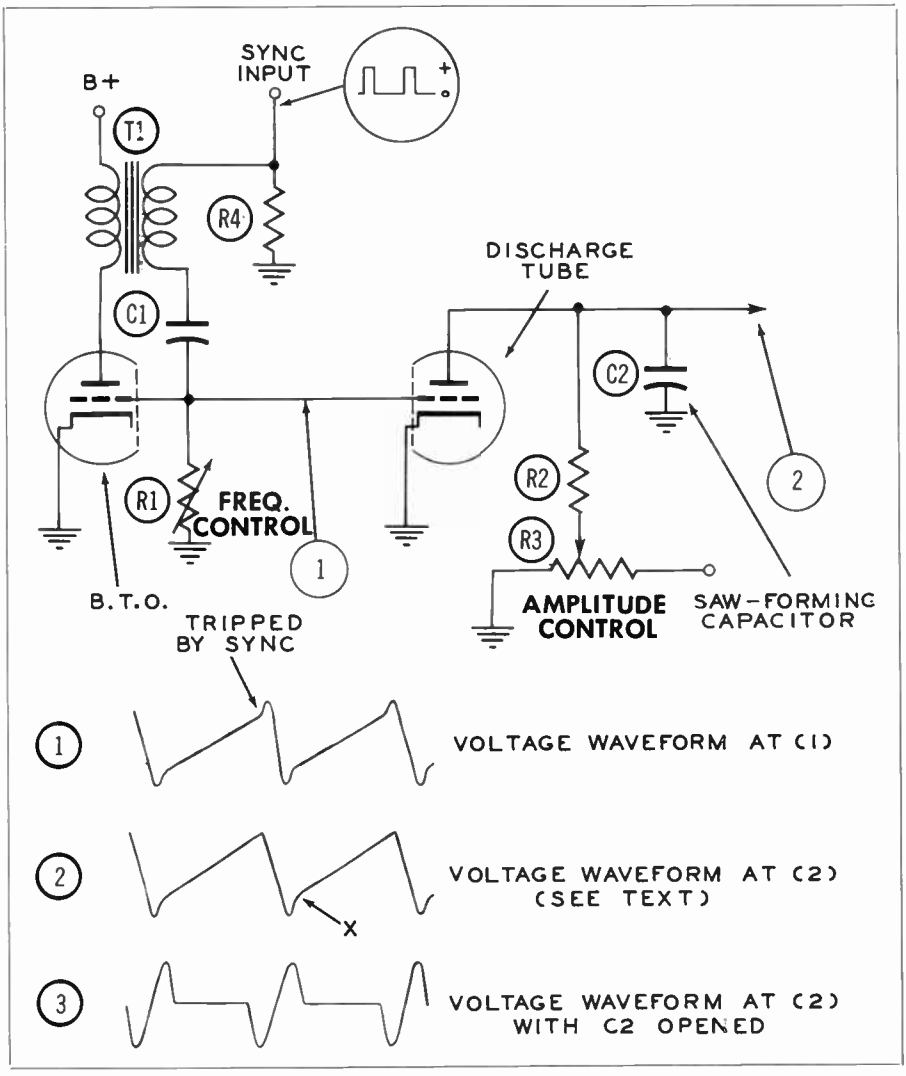

Figure 8.4G. Blocking — Tube oscillator and discharge circuit.

that C4 is relatively large, opening of the capacitor will usually cause the multivibrator to cease oscillation. Where the design is such that C4 is relatively small, oscillations may continue from stray-capacitance effects, but linearity, frequency and amplitude will be abnormal. A note of caution is given in this latter case: if a multivibrator is inoperative, and starts oscillation upon connecting the scope leads to the output terminals, the saw-forming capacitor should be replaced. Multivibrators have been known to keep functioning after being "started" in this fashion, but may quit at any time. The condition is usually an indication that C4 is becoming faulty, or soldered connections are poorly made.

In station monitors where a "fold-over" in the picture occurs at the edge of the raster, and the sweep generator is similar to that under discussion, the cause may be an increased value of R_k.

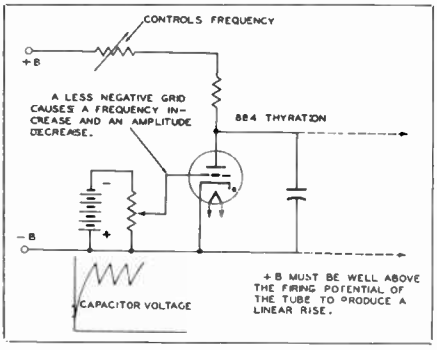

Figure 8.4H. Thyratron relaxation oscillator.

The resultant increase of resistance in the discharge path increases the retrace time excessively. A serious decrease in the value of R_k will cause the circuit to stop oscillation.

The typical symptoms and most probable causes of trouble in circuits similar to Fig. 8.4E(1) are tabulated in Fig. 8.4F.

A very common circuit employed at the station is the blocking oscillator-discharge tube circuit shown in Fig. 8.4G. (Basically described in section 2.3.) In this instance the applied sync pulse is of positive polarity. This pulses the blocking tube from cut-off into conduction just prior to the retrace interval. Most of the troubles occurring in this circuit are similar to those mentioned above, with some characteristics peculiar to it alone. Inadequate output amplitude may be caused by an abnormal increase in R2. Some slight non-linearity is normal at the bottom of the waveform at (2), point X, due to transformer action, but is readily removed in the following amplifier linearity controls. Abnormal non-linearity may be caused by decreased value of R2, which causes a shorter time-constant of R2C2, raising the amplitude but operating over the non-linear charging characteristic of C2. This is again similar to the multivibrator circuit. A defective transformer will also affect linearity. Poor sync action, if proper sync amplitude is applied, may be the result of a radical change in R4. Incorrect frequency, which cannot be adjusted by R1, is likely the result of a defective C1.

Fig. 8.4H illustrates a typical gas-tube relaxation oscillator, and is self-explanatory. This type of circuit is often used in station waveform monitors.

Trouble-shooting of other types of special circuits are explained in their place in the following sections.

8.5 *The Master Monitor*

The master monitor itself is used in many of the test procedures on studio equipment. This section will concern itself with facilities provided in such equipment, testing the monitor, and its use in maintaining other equipment.

One widely used and field-tested unit is the RCA TM-5A shown in front panel view in Fig. 8.5A. The complete block diagram of the monitor is presented in Fig. 8.5B. The tube numbers and important jacks and switches are shown, and should be followed during the following discussion. Details of each circuit necessary to be given later will then be referred to this block diagram for proper orientation to the whole monitor.

A total of four input connectors are provided, the two at the rear (J1 and J2, Fig. 8.5C(1)), being connected in parallel for applications where the Kinescope and Oscilloscope are to be driven from the same signal source. Connectors J4 and J5 on the upper right side of the unit (Fig. 8.3C(3)), provide special low-capacity inputs permitting the picture tube and oscilloscope to be operated from separate sources of information. For example, the monitor may be used in monitoring the picture output at the studio line, while the scope is used to check the waveform of some other unit.

A 12 contact plug at the rear of the unit (Fig. 8.5C(1)) provides connection for all necessary input power and external sync pulse application. Power for the tube circuits and centering voltage are obtained from an external regulated power supply through this plug.

At the top of the block diagram is

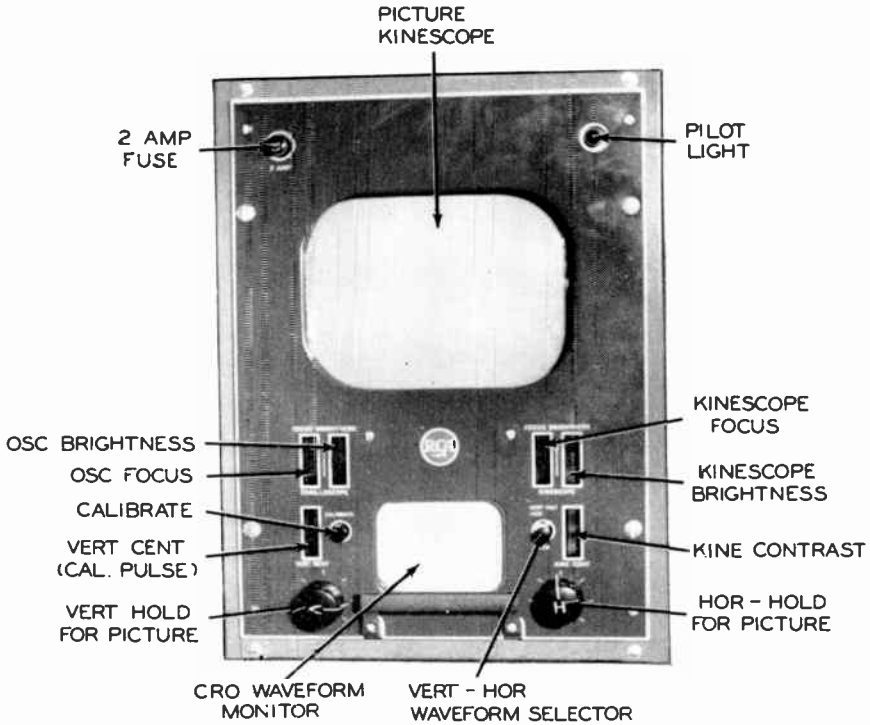

Figure 8.5A. Front panel of latest version of RCA TM-5A master monitor. (Note difference from earlier model in Figure 3.8A, Chapter 3.)

the CRO picture amplifier. The switch SW-3 controls relay K1 in the grid circuit of the first tube which permits the operator to transfer the output of the voltage calibration tube V2 to the input of V1. Use of this circuit is described later. A CRO grid terminal is located on the rear terminal plate of the unit (Fig. 8.5C(1)), so that timed pulses may be inserted to set frequency markers on the trace.

The kinescope picture amplifier is shown at the center of the block diagram. Switch SW-6 (Fig. 8.5C(3)), selects either the paralleled or separate input connectors. Switch SW-1 (same photo), selects one of two ways to drive the monitor. The position of SW-1 shown in the block diagram is the DRIVE position, in which driving pulses are obtained from the studio sync generator and fed directly to the grids of V13. The pulsed outputs of the two sections of V13 (a 6SN7-GT) then directly trigger the discharge sections of the V and H saw generator tubes V15 and V22. That is, with the SW-1 set in the DRIVE position, the blocking oscillator sections of V15 and V22 are rendered inoperative by opening the cathode circuits. The monitor is used in this way when checking any circuits in which the sync pulses are not present, such as cameras, control units, film chains, etc.

When a complete signal is to be monitored, such as that existing at the studio output line or incoming network or remote relay signals, switch SW-1 is set in the SYNC position. In this case, the H and V sync pulses are separated by an R-C network in the plate of V12, after the entire (H and V) sync pulses had been clipped from the video signal in the previous V11 and coupling stage. The output of V13 then triggers the H and V blocking oscillator section of V15 and V22.

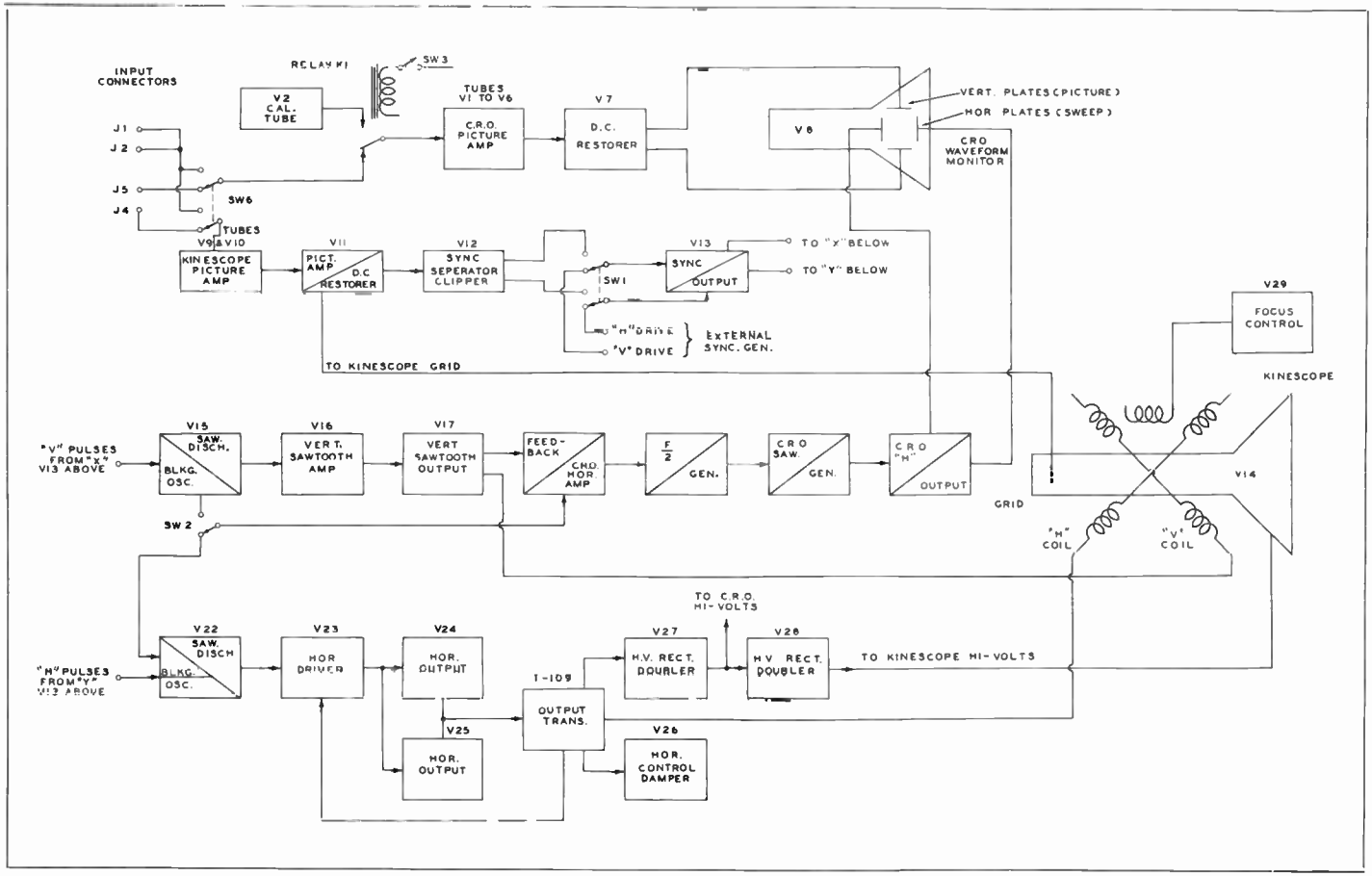

Figure 8.58. Complete block diagram of RCA TM-5A master monitor.

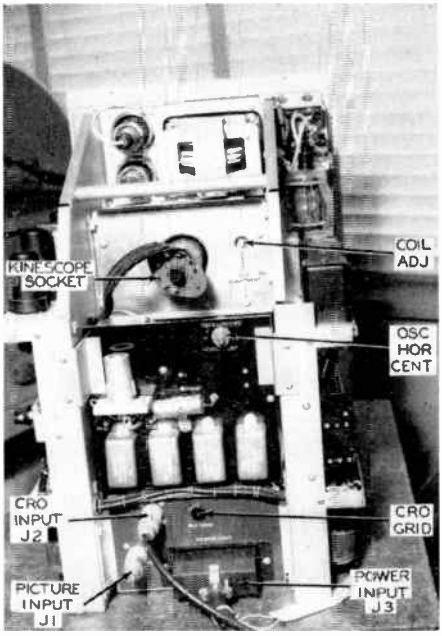

Figure 8.5C. (1) Rear View.

It should be noted that V19 is a half-frequency generator for the CRO waveform monitor. Either line or frame frequency is divided by 2, selected by switch SW-2.

The only unfamiliar circuit to the reader who has progressed thus far in the text is that associated with V29, the focus control for the kinescope picture tube. This tube is simply an electronic regulator which serves to hold the current in the focusing coil at a constant value to produce a steady magnetic focusing field. A resistor in the cathode circuit is used to adjust focusing.

The calibration tube V2 is a 6AL5 double diode which acts as a double clipper to develop a pulse (obtained from the H deflection yoke) across R295. See Fig. 8.5D. When the unit is in adjustment, the voltage across R295 is exactly 10% of the DC voltage appearing at the center arm of the CALIBRATION ADJUST potentiometer R111. Since this latter voltage is proportional to the regulated B+ voltage, the calibration pulse amplitude will remain constant after adjustment for a particular level. Thus R111 is used to set the voltage developed across R295 to the desired level. It is recalled that most stations now use a 1.4 volt peak-to-peak value for composite signal output at the studio line. If used to check non-composite signals such as would occur if the monitor were used as a camera monitor, the adjustment would be for 1 volt. Some stations still use the older standard 2 volt peak-to-peak composite level. In practice, power is turned off and a VTVM connected to J6 (in the newer models) or between the center terminal of R111 and ground in the older models. These are located on the right side as shown in Fig. 8.5C(3). The adjustment is then made with power turned on by adjusting the CALIBRATION CONTROL until a reading of 10 times the desired peak-to-peak voltage is indicated at this point. The pulse applied from the yoke may be observed on a calibrated oscilloscope connected at pin (1) as shown, with sweep set to observe the line frequency pulses. Due to capacitive loading effects, it is not advisable to check the actual voltage output at pin 5. It is noted that about a 25-volt peak is present at pin 1, and is negative at this point, thus the pulse across R295 would be in the negative direction as displayed on the CRO waveform monitor with the "Calibrate" switch on the front panel

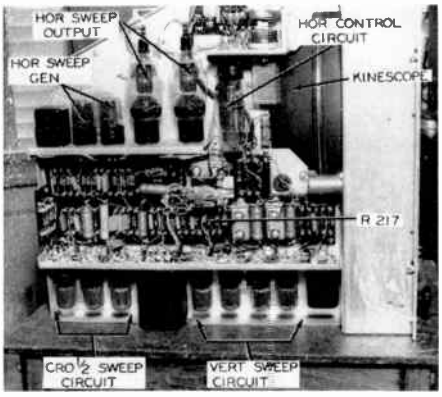

Figure 8.5C. (2) Side view — left.

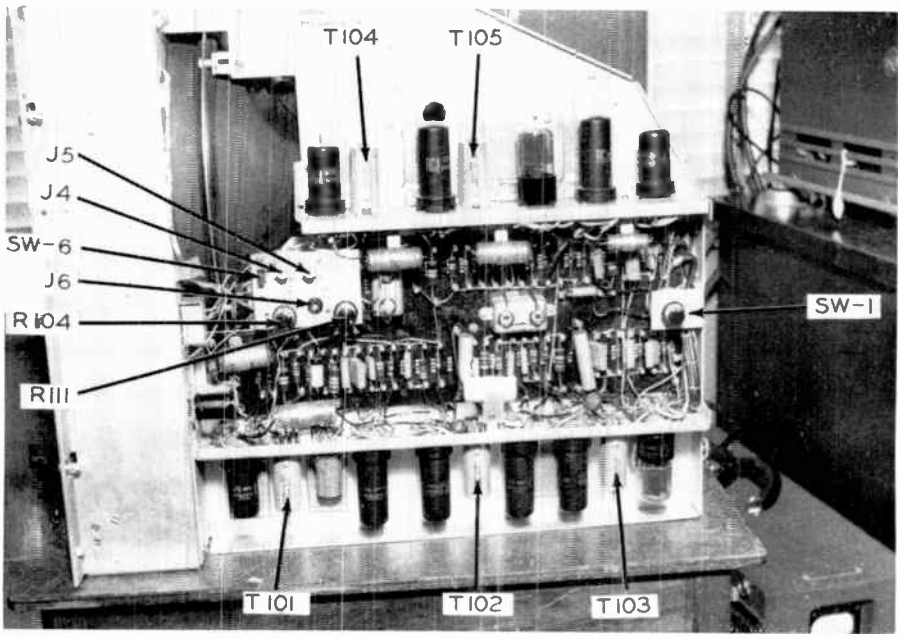

Figure 8.5C. (3) Side view — right.

operated (see Fig. 8.5A). It is standard that sync be displayed in the negative direction on waveform monitors. Thus the outgoing level may be conveniently checked and adjusted by use of the master monitor, by comparing the amplitude of the applied video waveform with that of the calibration pulse.

Whenever a new kinescope picture tube must be installed, it may be necessary to re-adjust the focus coil from the factory or previous alignment. This coil is perhaps more accurately visualized as an alignment coil as well as focusing, since the magnetic field corrects for any mis-alignment of the electron gun in the tube. When it is necessary to use different settings of the focus control for optimum focus in the corners as compared to the center of the raster, the coil should be re-adjusted. In extreme cases the sides of the raster are curved as a result of the beam striking the neck of the tube. Two screw adjustments are located on the rear of the unit shown in Fig. 8.5C(1) which are directly behind the focus coil. The up-

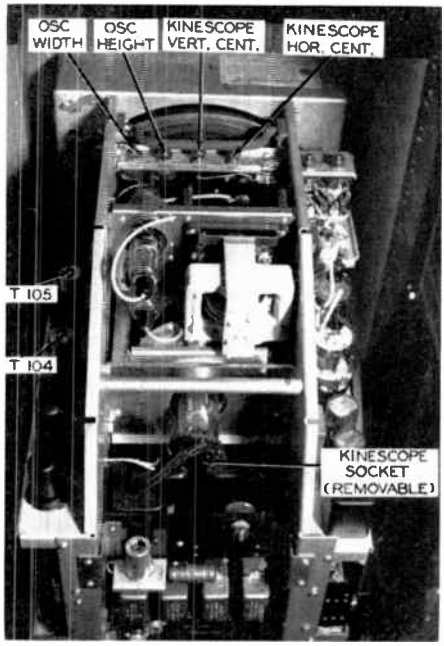

Figure 8.5C. (4) Top View.

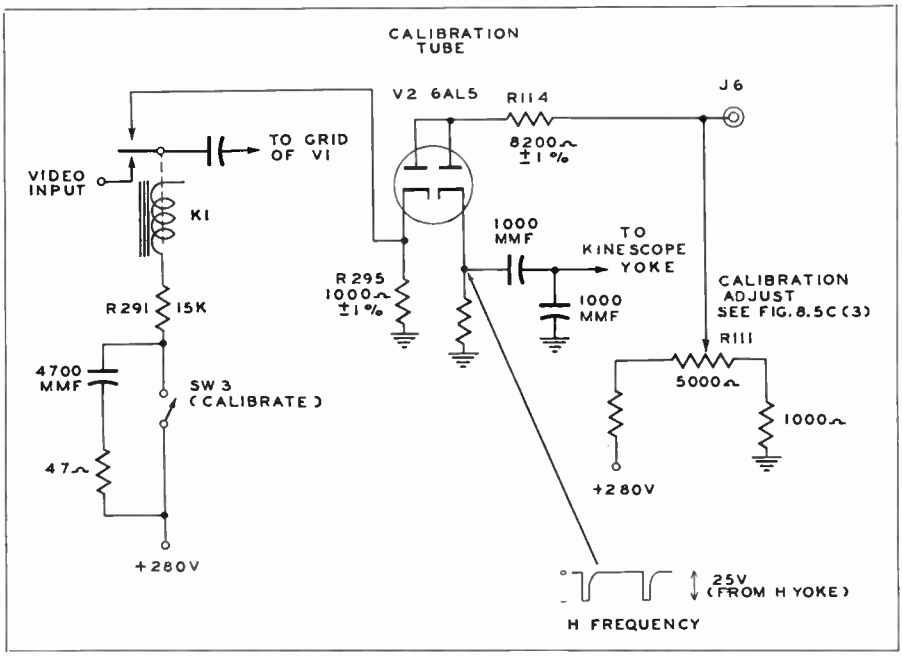

Figure 8.5D. Calibrator circuit of TM-5A Master Monitor.

per adjusting screw tilts the focus coil in the horizontal plane. The lower one moves the coil in the vertical plane. These must be adjusted for optimum corner focus and straightness of raster sides. If only one side of the picture is convex, the focus coil is tilted so that the resulting raster moves away from the side appearing convex.

Kinescope controls on the front panel (see front view) are the FOCUS, BRIGHTNESS and CONTRAST controls. The kinescope CENTERING, HEIGHT, and WIDTH controls are located on the top of the unit just behind the front panel.

The CRO waveform monitor controls located on the front panel are: FOCUS, BRIGHTNESS, CALIBRATE, and VERTICAL-HORIZONTAL selector switch which selects either V or H waveform for display on the CRO. This is a push-button type switch, and is pushed "In" to select the Vertical waveform. To release the switch, it is pressed momentarily to the end of its travel, then released, at which time it will spring all the way forward. This selects the Horizontal waveform. This is SW-2 in the block diagram. Maintaining such switches in prime operating condition is of the utmost importance to avoid troublesome waveforms difficult of analyzing. Mountings should be periodically inspected for firmness, and terminal connections for tightness and cleanliness. In operating the mechanism observe that the parts move freely with no tendency to bind. The stationary spring contacts should have good tension and make good electrical contact. The points of contact between the moving blade and spring terminals should be cleaned at specified intervals with crocus cloth dipped in a good cleaning fluid. If binding is noticed, apply a "drop" of instrument lubricating oil from the end of a clean toothpick. Keep oil *off* the electrical contacts!

The WIDTH control for the CRO is on top of the chassis, and the GAIN control is bracket mounted on the right-front side of the chassis. The H and V controls on the bottom of the front panel are the picture "HOLD" controls.

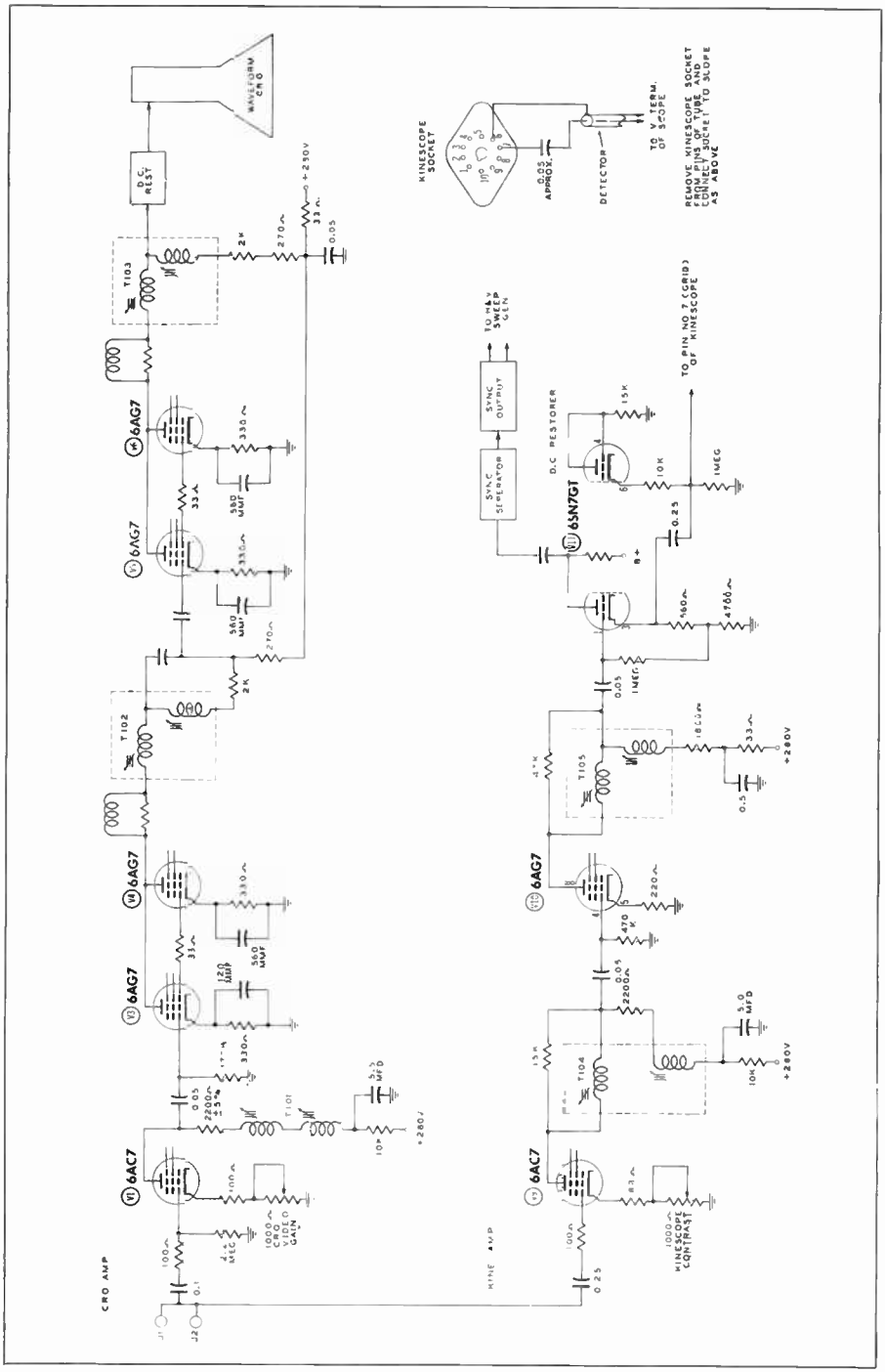

Figure 8.5E. Simplified schematic of RCA TM-5A master monitor in which important alignment transformers are present. (See text.)

These need no adjustment when the unit is used in the "driven" condition, but are adjusted to hold the picture when monitoring composite signals.

All master monitors as well as this particular monitor under analysis have circuits which periodically need alignment, especially if used as portable and field equipment, or after major maintenance has been necessary on the circuits. This alignment is different than that discussed for master monitors in section 6.2, which concerned correct adjustment of aspect ratio and linearity of sweeps so that the operator is assured of correct camera adjustment.

The adjustments concerned here are those of the shunt and series peaking transformers in the picture and waveform amplifiers. We will first examine how the high-frequency alignment is carried out in typical maintenance procedure where such alignment is deemed necessary.

The kinescope socket which slips onto the base pins of the picture tube after it is mounted (see Fig. 8.5C(4)) is removed for this alignment. See Fig. 8.5E during the following discussion. Terminal 6 of this socket is the cathode connection, and terminal 7 is the grid. The detector for the scope input is placed across these terminals with an isolation capacitor in series with the cathode lead. SW-6 is turned to the DOWN position, which selects the common jacks J1 and J2. With the sweep generator connected to one of these jacks, and the kinescope CONTRAST control set to maximum, transformers T105 and T104 should be aligned in that order. For this procedure, refer to previous section 8.3. The response should be essentially flat to 7 megacycles in the TM-5A. If alignment is seriously out of adjustment, it is advisable to first connect the sweep generator between pin 4 (control grid) and ground of V10 for alignment of T105, then back to the input jack for alignment of T104.

The high-frequency response of the CRO amplifier may be checked by use of the undetected waveform on the monitor scope itself. To do this, SW-2 is placed in the VERTICAL (in) position, and a 0.5 volt signal from the sweep generator applied to one of the common input jacks J1 or J2. Alignment of T101, T102 and T103 is made by observing the pattern on the master monitor CRO screen. This response should be essentially flat to 4 megacycles, and the axis tilt should be less than 15% of the peak-to-peak amplitude. When adjustments prove ineffective in obtaining the required high-frequency response, each stage must be checked individually until the stage in which the deviation occurs is isolated. Components of this stage are then checked by conventional test methods.

Low-frequency response of this section is measured by leaving SW-2 in the VERTICAL position (in), and feeding the output of a 60 cycle square wave generator at an amplitude of 1 volt peak-to-peak, into J1 or J2. With the CRO GAIN control set to give a 1" deflection on the screen, the tilt should be less than 5%. (Section 8.3.) If not, stages should be checked individually until the faulty stage is isolated. The most likely sources of poor low-frequency response are changed values of coupling or decoupling capacitors, coupling or decoupling resistors, or following stage grid resistance.

To check the low-frequency response of the kinescope amplifier, the picture tube socket may be returned to the pins of the kinescope, and the test oscilloscope (without detector) vertical terminals connected from pin 3 on V11 to ground. With a 60 cycle square-wave at an amplitude of 1 volt p-p applied to J1 or J2, and the CONTRAST control left at maximum position, the tilt should be less than 5%.

Since the waveform monitor of the master unit is often used to indicate the final video level as it leaves the studio for the transmitter, the operator may find a choice of two pattern characteristics associated with this circuit. (Review video levels, sections 3.5 and 6.4). For example, the RCA TM-6A master monitor, under development at

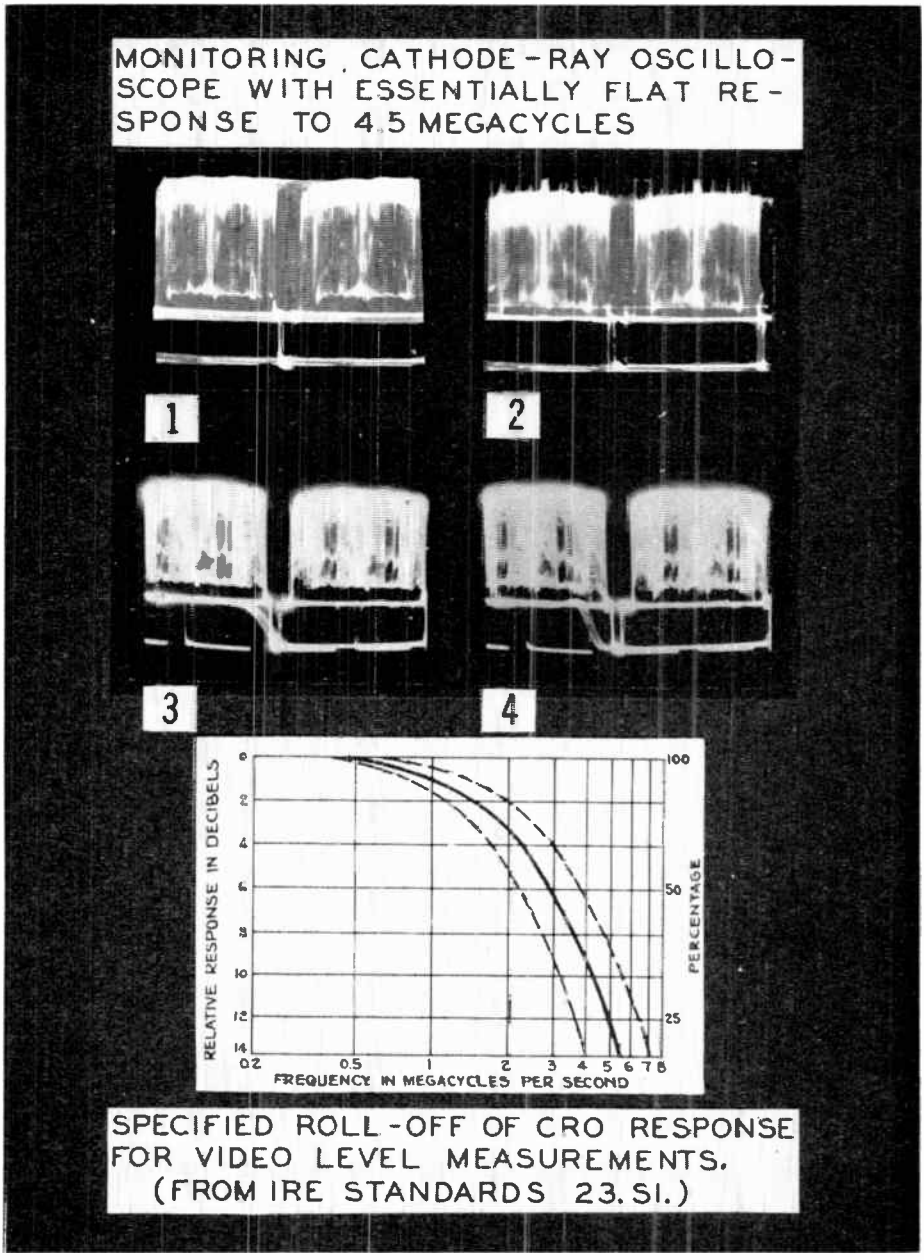

Figure 8.5F. Appearance of monoscope camera signal waveform on CRO with different response characteristics. (1) is a normal signal on wide band scope. (2) is same signal displayed on same scope, but with artificially produced overshoots in signal. (3) is same signal as (1), but displayed on scope whose amplifier is rolled-off as in IRE specifications. (4) is same signal as (2), on IRE roll-off characteristics.

db loss	voltage ratio	db loss	voltage ratio
zero	1.0	8.0	0.39
1.0	0.89	9.0	0.35
2.0	0.79	10.0	0.31
3.0	0.70	11.0	0.28
4.0	0.63	12.0	0.25
5.0	0.56	13.0	0.22
6.0	0.50	14.0	0.19
7.0	0.44	15.0	0.17

Table 8.5G.

the time of this writing, incorporates a variable vertical amplifier response for the CRO waveform oscilloscope. In the normal wide-band position, the response is essentially flat to 4.5 megacycles. When used as level measurement only, the response is "rolled-off" at the high end as illustrated in the IRE curves of Fig. 8.5F. The solid line indicates the recommended roll-off, with the dashed lines showing allowable tolerances in the amplifiers response for level measurements.

In this Fig., (1) is the normal appearance of the waveform displayed on a wide-band scope when the signal input is from a monoscope camera. Note that this pattern is capable of indicating quality of signal as well as level in amplitude, showing distribution of lights and darks in the pattern, and good shading characteristics. In (2) is the same monoscope signal with artificially produced overshoots (transients), as displayed on the same wide-band scope. It is recalled from previous sections on video level interpretations that these characteristics lead to major differences in handling overall gain by different operators. As a result of a study from which the IRE standard mentioned in the Fig. were compiled, it was found that such roll-off characteristics reduced disagreements among operating personnel concerning levels, and still provided sufficient indication of overshoot so that an undue amount would be apparent. (3) in Fig. 8.5F is the pattern produced from signal (1) on the narrow band-width CRO. Note that, since highs are reduced in response, the entire pattern appears of the same intensity. From the same characteristics, the overshoots of (2) when displayed as in (4) are not as apparent (except in the "black" region), and a more uniform level indication results.

In installations where such facilities are provided, the maintenance department should be charged with the responsibility of periodically checking this roll-off characteristic of the monitor. From the curve in the Fig., the largest amount of roll-off that should be allowed is 14 db down at 4 megacycles. A greater amount of attenuation of the highs would allow serious overshoots occurring over relatively long periods of time to pass unnoticed with consequent carrier cut-offs in the white region. (Where white-peak limiters are used at the transmitter, the result would be serious compression of the gray scale in the signal). This response characteristic may be conveniently measured by means of the sweep generator method previously described, using the marker generator, and a voltage calibrator for the scope. Table 8.5G lists the decibel loss to the corresponding voltage ratio.

Other technical characteristics of the master monitor will be described in the next section on the sync generator, where the monitor is used for pulse-cross observation.

8.6 Maintaining the Sync Generator

The sync generator, basically described in section 6.9, will be discussed in this section relative to maintenance procedures, measurement of pulse widths and timing relationships, and possible troubles with most likely remedies. The complete block diagram for the RCA TG-1A sync generator was given in section 6.9 for purposes of illustrating the overall functioning of the circuits. For the special analysis in the present section, Fig. 8.6A is presented. This block diagram omits the oscilloscope driving pulse circuits, while the other circuits are given with the associated tube numbers. For example, the 60 cycle lock circuit in the pulse-former unit shows the numbers 1-2-3-7, designating the circuits in which tubes V1, V2, V3, and V7, appear. The table in Fig. 8.6B lists the tube symbol numbers, the type of tube, and circuit function. Tube numbers not listed are those associated with the oscilloscope waveform driving signals with which we are not concerned in this study. The signal formations of the horizontal and vertical driving signals (for terminal equipment only) and those actually transmitted, the composite sync and blanking signals, are those under present analysis. As illustrative examples of becoming acquainted with possible symptoms of trouble and their possible cause, the following is presented:

COMPLETELY INOPERATIVE. (No signal at any coaxial line output terminal): First, note the glass tube filaments to see if they are on. If not, line voltage is either off at the sync generator terminals or the circuit-breaker switch on front panel is defective. If filaments are on, the most likely source of trouble is in the associated power supply which supplies plate voltages to the tubes. If this supply checks normal (250 volts), the next most likely source is either tube V11 (master oscillator), or the following clipper tube V8. Obviously if either one of these circuits is not functioning, no signal will appear at any output terminal.

ALL 60 CYCLE VERTICAL SIGNALS ABSENT. Since *all* field pulses are absent, the likely source of trouble would be in the 7-5-5-3 counter division chain. This includes tubes V6, V9, V10, V12, V13, V16, V17, V20 and V24. The operation of these circuits are readily checked by the COUNTER INDICATOR switch in conjunction with the panel indicator tube. In this particular sync generator, the count-down appears as dots in a vertical line on the indicator screen. Thus with the counter indicator switch on the 4500-7 position (this indicates that the frequency division of the 31.5 kc master oscillator is divided by 7 to give 4500 pps), the proper functioning of the 7 to 1 counter results in 7 dots appearing on the screen. (The FREQUENCY CONTROL switch at top of panel should be in the OFF position for these checks. This is described more fully later). The next two counter positions should show 5 dots, and the last position should show 3 dots. The first stage which results in only one dot appearing on the screen is the defective circuit.

VERTICAL DRIVING SIGNAL ABSENT. If all other 60 cycle signals are present, the only possible sources of trouble are the circuits associated with V49 and LA55. V49 is the vertical drive multivibrator, and may be checked as described in section 8.4. LA55 is the 6AG7 vertical drive line amplifier output stage, and is checked in the conventional manner. ALWAYS REMEMBER THAT VACUUM TUBES PROVE TO BE THE TROUBLE IN 90% OF FAULTY OPERATION.

VERTICAL BLANKING SIGNAL ABSENT. If H blanking signals are present, the only source of trouble is the circuit of V37.

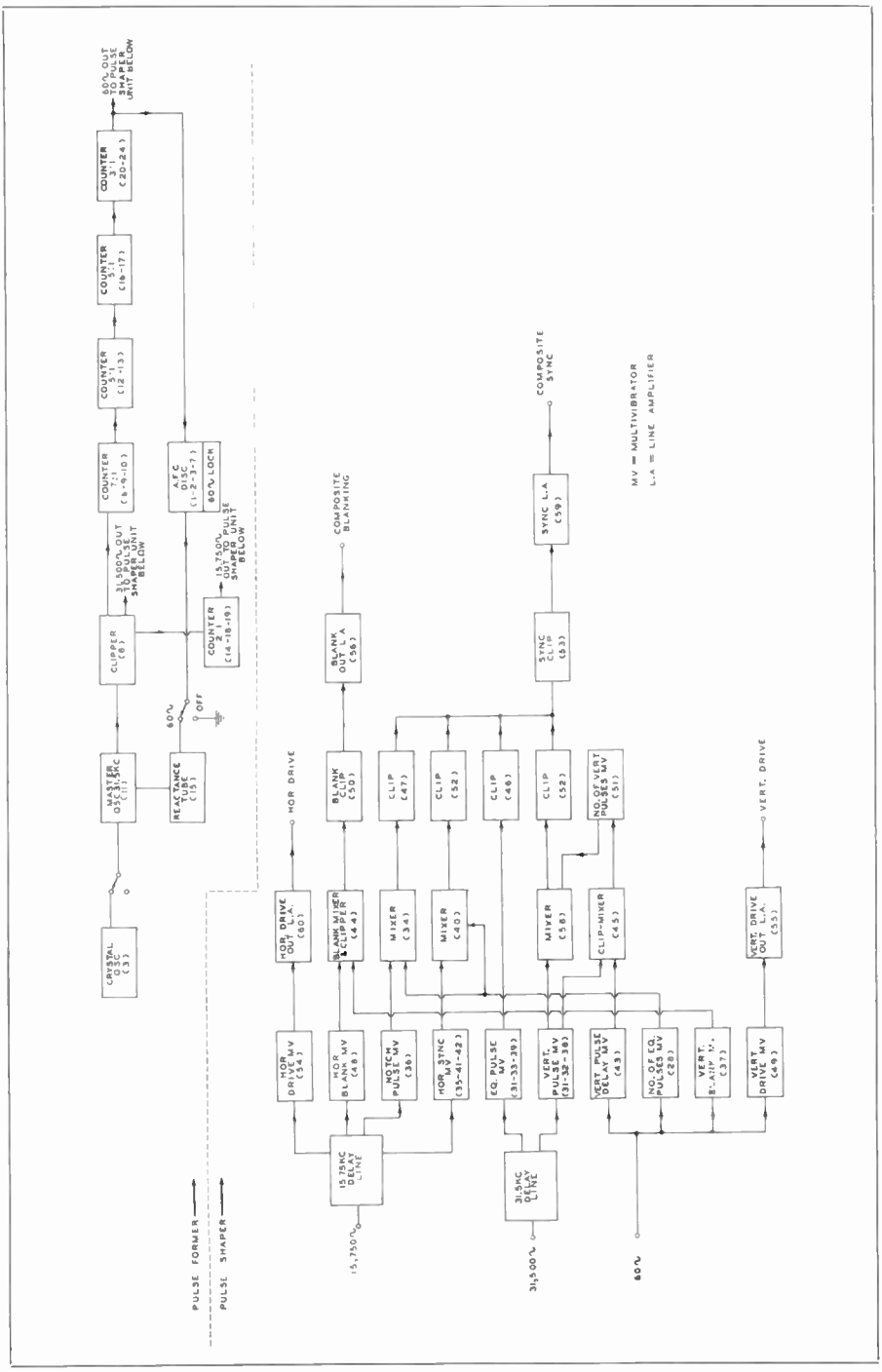

Figure 8.6A. Black diagram af RCA TG-1A sync generatar with tube "V" numbers af each circuit shawn. (Osc. driving signals amitted.)

Symbol	Type	Circuit Function	Symbol	Type	Circuit Function
V1	6H6	Discriminator	V36	6SL7-GT	Notch. Pulse MV
V2	6H6	Discriminator	V37	6SL7-GT	V. Blank. MV
V3	6SL7-GT	Crystal Osc. and Clipper	V38	6AC7	Part of V. Pulse MV
V6	6AC7	Buffer	V39	6AC7	Part of Eq. Pulse MV
V7	6AC7	Buffer	V40	6L7	Mixer
V8	6SN7-GT	Clipper	V41	6AC7	Part of H. Pulse MV
V9	6H6	Counter	V42	6AC7	Part of H. Pulse MV
V10	6SN7-GT	Block. Osc. and Amp.	V43	6SL7-GT	V. Pulse Delay MV
V11	6SN7-GT	31.5KC Osc.	V44	6SL7-GT	Blank. Mix and Clipper
V12	6H6	Counter	V45	6L7	Mixer
V13	6SN7-GT	Block. Osc. and Amo.	V46	6SL7-GT	Sync. Mix. and Clipper
V14	6AC7	Buffer	V47	6SL7-GT	Sync. Mix. and Clipper
V15	6AC7	Reactance Tube	V48	6SL7-GT	H. Blanking MV
V16	6H6	Counter	V49	6SL7-GT	V. Drive MV
V17	6SN7-GT	Block. Osc. and Amp.	V50	6SL7-GT	Blanking Clipper
V18	6SN7-GT	Block. Osc. and Amp.	V51	6SL7-GT	No. of V. Pulses MV
V19	6H6	Counter	V52	6SL7-GT	Sync. Mixer and Clipper
V20	6H6	Counter	V53	6SN7-GT	Sync. Clipper
V24	6SN7-GT	Block. Osc. and Amp.	V54	6SL7-GT	H. Drive MV
V28	6SL7-GT	Multivibrator	V55	6AG7	Vertical Drive Output
V31	6SN7-GT	Buffer	V56	6AG7	Blanking Output
V32	6AC7	Part of V Pulse MV	V58	6L7	Mixer
V33	6AC7	Part of Eq. Pulse MV	V59	6AG7	Sync. Output
V34	6L7	Mixer	V60	6AG7	H. Drive Output
V35	6SL7-GT	Clipper and Buffer			

Figure 8.6B. Table of tube designations and circuit functions for block diagram of Figure 8.6A. There are a total of 60 tubes in the RCA TG-1A sync generator. Those not shown are either in the oscilloscope driving circuits or indicator circuits.

NO BLANKING SIGNAL. If no signal appears at LA56, the sources of trouble would be LA56, V50, or V44.

HORIZONTAL BLANKING SIGNAL ABSENT. If V blanking signal is present, the only possible source of trouble is the circuit of MV48.

ALL 15,750 CYCLE HORIZONTAL SIGNALS ABSENT. Since *all* H signals are absent, the trouble is in the 2-1 counter stages associated with tubes V14, V18 and V19. See the table of Fig. 8.6B for exact functioning of each tube.

HORIZONTAL DRIVING SIGNAL AB-

SENT. If all other pulses are ok, the sources of trouble are the multivibrator V54 or the line amplifier V60.

SYNCHRONIZING SIGNAL ABSENT. Other pulses being ok, the only sources of trouble would be circuits associated with V59 and V53. Note that trouble in any of the earlier stages in this chain would not "kill" the sync signal, but it would be defective as outlined in the following paragraphs.

EQUALIZING PULSES ABSENT. If all other sync pulses are present, the sources of trouble are in V31, V33, V39 or V46. See the table, Fig. 8.6B for exact functioning of each tube.

HORIZONTAL SYNC PULSE ONE-HALF NORMAL WIDTH. In this case, it is assumed that the HORIZONTAL PULSE WIDTH control is operated and found to be ineffective. This control is in the grid circuit of V42, which is part of the horizontal sync multivibrator V41 and V42. This MV is triggered from the 15,750 cycle delay-line through a clipper-buffer stage V35. A positive pulse from this MV feeds the first grid of mixer V40, while a 60 cycle negative pulse is applied to the third grid of this tube. This is a keying-out pulse obtained from the Number of Equalizing Pulses Multivibrator V28. The output of mixer V40 then contains 15,750 cps pulses except during the time of the 60 cps pulse intervals. This feeds the clipper stage V52, which has a load resistor common to the other clippers shown, V46 and V47. At this common plate load resistor of the sync mixers, the leading edge of the equalizing pulse becomes the leading edge of both H and V sync pulses. Therefore if V35, V41, V42, V40 or V52 should be inoperative, the width of the H sync pulse would actually be equivalent to the equalizing pulse, which is approximately one-half that of normal H sync, and the H pulse width control would be ineffective.

APPEARANCE OF HORIZONTAL PULSES INSTEAD OF EQUALIZING PULSES. Certain deficiencies could

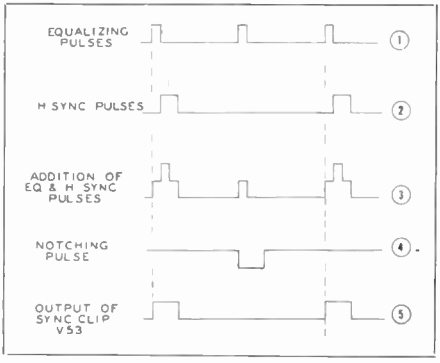

Figure 8.6C.

cause horizontal sync pulses to appear in the vertical blanking interval in the normal place of the equalizing pulses. Remember that the vertical sync signal is a composite signal in itself, consisting of six equalizing pulses, followed by six serrated vertical sync pulses, followed by six more equalizing pulses, followed by horizontal sync pulses. Observe the block diagram during the following discussion. A buffer tube V35 receives a pulse from the 15.75 kc delay line which triggers the horizontal sync pulse multivibrator V41-42, the output of which feeds the mixer stage V40. It is noted this mixer also receives a 60

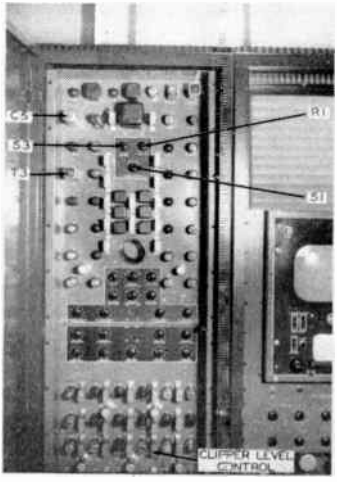

Figure 8.6D. Front view of RCA TG-1A sync generator.

cycle pulse from the "number of equalizing pulses" multivibrator V28. These are keying-out pulses which serve to eliminate the horizontal sync pulses during the vertical sync interval. Therefore if V28 should become inoperative, the horizontal pulses would appear during the normal equalizing pulse interval as well as at their regular intervals.

APPEARANCE OF EQUALIZING PULSES BETWEEN HORIZONTAL SYNC PULSES. Fig. 8.6C illustrates the action to be discussed. In (1) is illustrated the equalizing pulses. The pulses which triggers the horizontal sync multivibrator is delayed with respect to the start of the equalizing pulse by the 15.75 kc delay line. Respective delays from these lines are obtained by tapping off at the proper length down the delay line circuits, which consists of a series of lumped inductances and capacitances. (See Fig. 8.6F.) All of the sync signals are added together in the common plate load resistor of the clippers V46-47 and 52. In (2) is shown the delayed H pulses, while (3) illustrates the addition to the equalizing pulses in the common resistor. This is the algebraic sum of the pulses, and it is noted that the leading edge of the sync pulse is now coincident with the leading edge of the equalizing pulse. During the H interval, the extra equalizing pulse must be eliminated. Otherwise an equalizing pulse would appear between each H sync pulse. This is accomplished by notching pulse multivibrator V36. This MV is triggered from the start of the 15.75 kc delay line, therefore co-incident with the start of the equalizing pulses. (4) in Fig. 8.6C. The notching pulse, at the output of clipper V47 (therefore added to the combined sync pulses in the common load resistor) is a square wave with opposite amplitude excursion to the equalizing pulse as shown. This is known as amplitude separation, in which used and unused equalizing pulses are separated, and the unused pulse eliminated. The pulses are clipped in clipper V53, and the H interval then appears as in (5). The

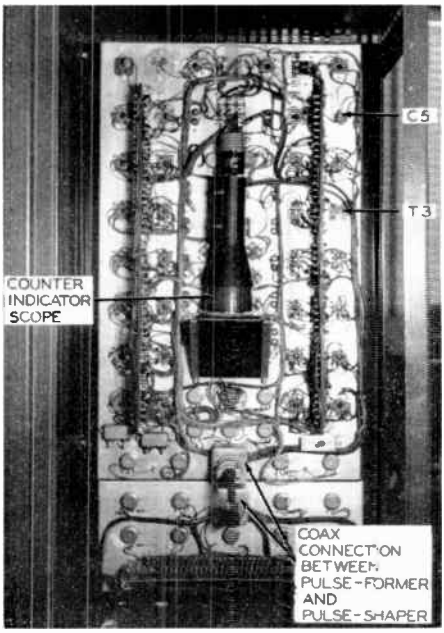

Figure 8.6E. Rear view of pulse former unit.

notch pulse is cut-off during vertical intervals by the blanking pulse applied to mixer V34, so that normal equalizing pulse intervals occur when needed during this interval.

Therefore, if an equalizing pulse appears between H sync pulses during the line interval, the trouble would lie in V36, V34 or V47.

It may be noted from typical troubles mentioned previously, that testing and trouble shooting mostly involves blocking oscillators, multivibrators and clipper circuits. The testing of the first two has already been described. Clippers are most conveniently tested by applying a square wave from a suitable generator to the input of the stage to be tested, of approximately the same duration and recurrence rate as the pulse normally applied in the circuit. The pulse amplitude should not vary substantially as observed on an oscilloscope at the output.

Counter circuits are readily checked since all sync generators employ some form of indicator tube to check their operation from the front panel. The most likely cause of a malfunctioning counter other than the tube itself is a

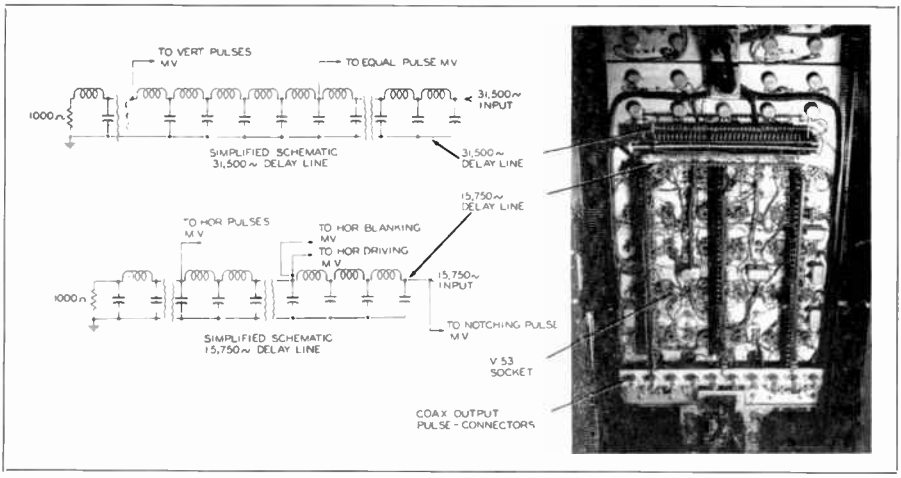

Figure 8.6F. Rear-View pulse shaper.

changed value of time-constant in the RC circuit which triggers the counter in operation. (Section 6.9.)

It should be noted from the block diagram that three multivibrators are used to obtain the required six vertical sync pulses. The output of the V pulse delay multivibrator V43, triggered from the 60 cycle bus, is differentiated and fed to mixer tube V45 which also receives the pulses from vertical pulse MV, V32-38. The output of V45 keys the number of vertical pulses MV, V51, the output of which is fed to mixer V58. This mixer also receives the pulses from the vertical pulse MV. The output of V58 then keys-in the vertical sync pulses. Therefore, the VERTICAL PULSE DELAY control on the front panel is adjusted to get six equalizing pulses *preceding* the vertical sync pulses, while the NUMBER OF EQUALIZING PULSES control is adjusted to get six equalizing pulses *following* the V sync pulses.

Pulse outputs at all the line amplifiers are 4 volts peak-to-peak across a 75 ohm load. Either positive or negative polarity outputs are obtainable in the studio sync generator. Field sync generators provide only the standard negative polarity output.

If for any reason the master oscillator must be re-adjusted for its "on frequency" condition, a portable oscilloscope is necessary to carry out the following procedure:*

1. Connect a 60 cycle sine-wave source of suitable amplitude to the horizontal deflection terminals of the scope.

2. Connect the 60 cycle pulse output of the synchronizing generator to the vertical deflection terminals, then proceed as follows:

a. Adjust the slug in the oscillator transformer (T3, see Fig. 8.6D) to the extreme clockwise position.

Set the AFC TIME CONSTANT SWITCH (R1) to position 4 (this is the longest time constant position), and the FREQUENCY CONTROL switch (S-3) to the 60 cycle position.

c. Connect a vacuum tube voltmeter across C5 (Fig. 8.6E). This capacitor is in the cathode circuit of the AFC discriminator 6H6, V1. Adjust R140 until the voltage is zero. (This is the AFC balance resistor).

d. Operate the FREQUENCY CONTROL switch to the OFF position.

3. Adjust the slug in the oscillator transformer T3 until the 60 cycle pulse from the sync generator remains approximately stationary on the scope screen. (The OFF position is free-run-

*Courtesy RCA

ning). The 31.5 kc oscillator is now on frequency.

Six adjustments are provided to obtain the desired synchronizing signal. The scope may be connected to pin 2 of V53 (this is the plate of the first section of the sync clipper) and the CLIPPING LEVEL control adjusted for an amplitude of 22.5 volts. This is a screwdriver control on the front panel of the pulse-shaper unit. (Fig. 8.6D.) See Fig. 8.6F for location of V53 and other components discussed previously). The following adjustments are made while observing the signal:

1. Adjust the NUMBER OF EQUALIZING PULSES control until the total of equalizing and vertical synchronizing pulses equals 18.

2. Adjust the VERTICAL PULSE DELAY control until six equalizing pulses occur before the first vertical sync pulse.

3. Adjust the NUMBER OF VERTICAL PULSES control until six vertical sync pulses appear in the V sync interval.

4. The remaining 3 adjustments should be made while observing the sync signal across the 75 ohm termination at the bottom of the panel. (See Fig. 8.6F.) Adjust the width of the equalizing pulse, the vertical pulse and the horizontal pulse by means of the respective designated controls on the front panel.

Check the amplitude of all output pulses. These should read 4 volts peak-to-peak.

Adjust the vertical driving, horizontal driving, vertical and horizontal blanking pulses to the required width by rotating the corresponding width controls on the panel. For most uses it is recommended that the respective driving widths be 0.04 of the vertical interval and 0.10 of the horizontal interval.

Phase Shift Control. (Top of panel Fig. 8.6D.) (R1.) When motion picture films are used in conjunction with an intermittent type film projector and iconoscope film camera, it is necessary that the film projector be synchronous and phased with the iconoscope-deflection system within approximately 4 degrees. This is necessary so that the period during which the projector shutter exposes the iconoscope to light falls within the interval of the vertical blanking pulse. Otherwise spurious light-streaks will occur. The above condition is established by driving the projector with a synchronous motor operating on the same 60 cycle power system as the sync generator. Thus when the sync generator is run in the 60 cycle lock-in position, it is only necessary to adjust the phase of the sync pulses of the sync generator relative to that of the 60 cycle supply so that the projector shutter opening occurs at the proper time. The PHASE SHIFT control provides the means for this adjustment.

In checking the widths and delays of the pulses from a sync generator, the pulse-cross method is the most convenient, rapid and accurate method in all but the most elaborately equipped stations. The interpretation of this pattern was included in section 6.9. It is the purpose of this further discussion

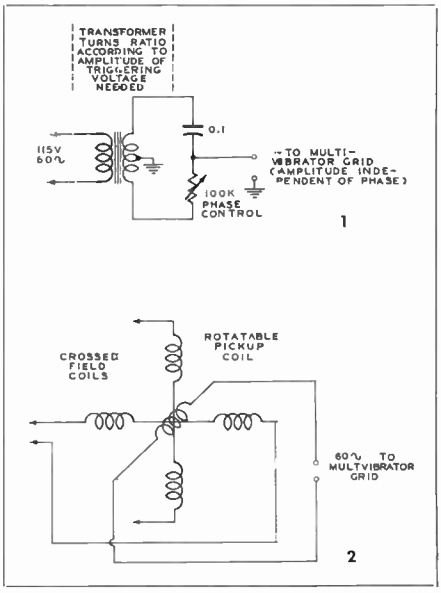

Figure 8.6G. Two types of 60~ phase shifters suitable for timing multivibrator type of oscillator for pulse-cross.

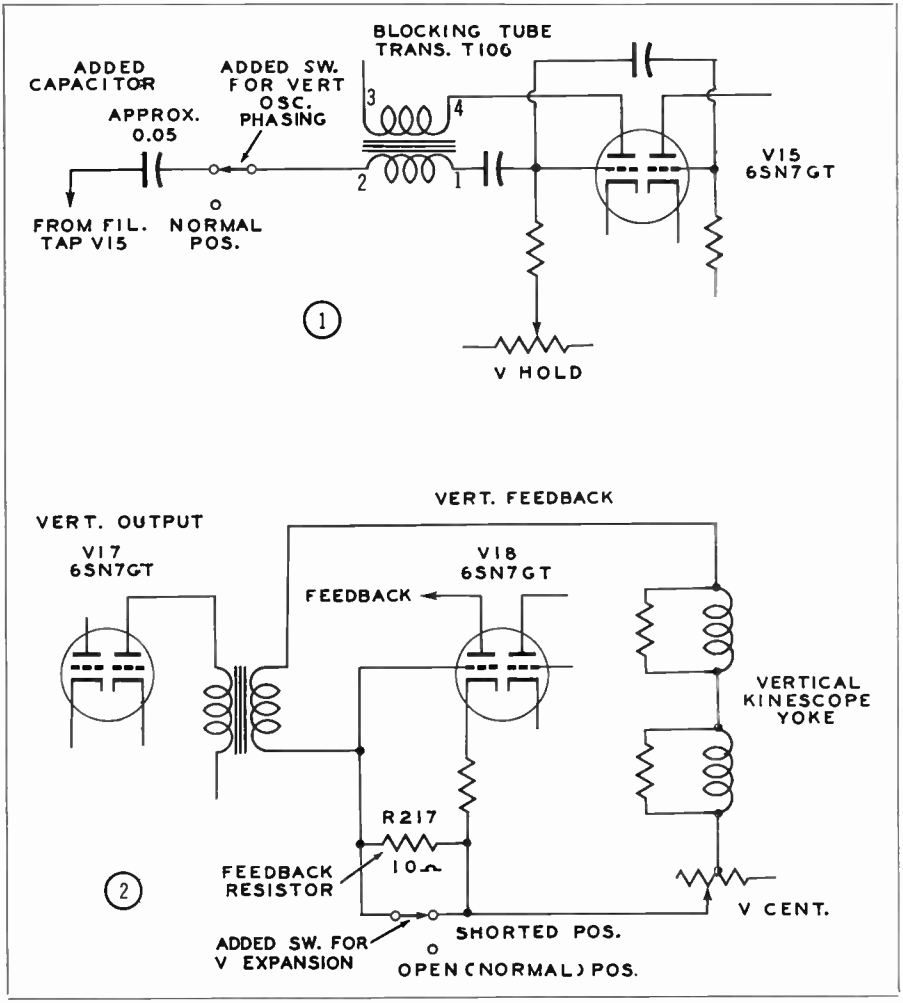

Figure 8.6H. Modifications of RCA TM-5A for vertical sweep phasing and expansion.

to point out the actual means of producing such a pattern and maintenance implications.

The pulse-cross is usually produced upon the master monitor picture tube rather than an oscilloscope. It is simply necessary that the phase of each scanning oscillator (horizontal and vertical) be shifted from the phase position normally used. When a composite picture signal is then applied to the video amplifiers, the line frequency and field frequency blanking intervals are displayed on the picture tube in the normal position of the picture only. Some engineers prefer to invert the composite picture signal from the polarity normally applied, so that the signal applied to the kinescope is black positive rather than black negative. When this is done, the sync signals appear white, blanking and black level gray, and picture highlights content black. The prevailing practice, however, is to apply signal of normal polarity and increase the brightness of the kinescope so that sync is black, blanking gray, and picture highlight content white.

As pointed out in section 6.9, it is desirable for the vertical interval to be

both phased and expanded, so that the actual number and position of the equalizing and vertical sync pulses may be counted and accurately measured. The horizontal interval is phased but not expanded.

The vertical phasing and expansion is easiest to obtain in most types of monitors. Monitors which employ a multibrator as the vertical sweep oscillator are arranged to trigger from a 60 cycle sinewave through an adjustable phasing network under control of the operator. The 60 cycle signal may be taken from the power line. One such arrangement is illustrated in Fig. 8.6G.

In monitors employing a blocking oscillator as the vertical sweep generator, such as the RCA TM-5A described previously, it is only necessary to apply a 60 cycle voltage of certain amplitude from a filament tap, to the triggering point of the tube with normal triggering connection removed. The engineer will find a number of different methods of accomplishing this has been practiced, mostly by means of a switching arrangement which switches the proper connections for either normal operation or to produce the pulse-cross. Fig. 8.6H illustrates the fundamentals involved in the type of monitor typified by the TM-5A. In (1), an added capacitor of approximately 0.05 mfd is connected to a filament terminal of the BTO tube V-15, and connected by means of an added switch to terminal 2 of transformer T-106. This value of capacitance is only approximate, since the amplitude must be such that the oscillator triggers near the top of the AC cycle. When set in this region by the proper value of capacitance, the vertical HOLD control allows placement of the vertical interval at the desired portion within the raster. The added switch allows restoration of the monitor to normal operation whenever desired.

Expansion of the vertical sweep in this monitor is usually accomplished by the means shown in (2) of Fig. 8.6H. An added switch, which may actually be a second section of the switch above, is used to short the feedback resistor R217 in the vertical feedback circuit of V18. In this monitor, the resultant expansion of vertical sweep is sufficient to allow counting of the pulses and accurate observation for correct positioning and duration.

Fig. 8.6I shows one method used on the TM-5A to properly position the H interval within the raster. The values of the delay circuit L and C may vary somewhat in practice. It is noticed from the figures of the pulse-cross pattern

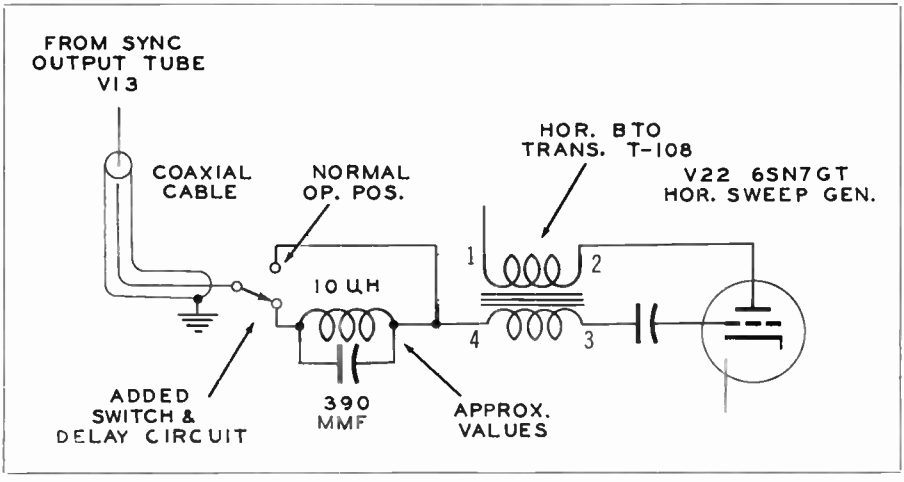

Figure 8.6I. One possible modification of RCA TM-5A master monitor to shift phase of horizontal sweep oscillator for pulse—cross display.

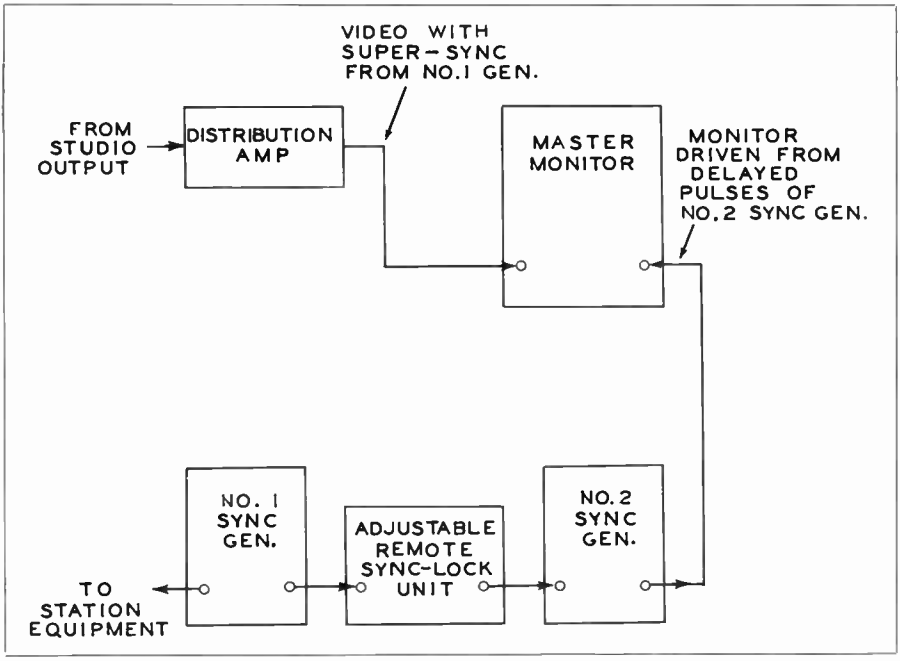

Figure 8.6J. Alternate method of producing pulse-cross by means of adjustable remote sync-phaser unit.

in section 6.9, that the horizontal blanking interval is not placed in the center, but to the right far enough that both sets of equalizing and serration pulses are displayed.

Several manufacturers are developing station monitors which contain built-in facilities for displaying the pulse-cross. By the time this text is in print, these monitors will probably be on the market. If the reader is familiar with the above fundamentals, he will understand the basic operational principles of these circuits.

In stations employing at least two sync generators, or one studio-type generator with one field type available, no modifications are necessary in the monitor for pulse-cross display if an adjustable remote-phase sync lock is available (section 3.9). An automatic type of remote sync lock is not suitable for this application, since manual control of the phasing must be obtainable. Fig. 8.6J illustrates this method. With station equipment driven from sync generator No. 1, the studio signal, after sync is added (as at the studio output line), is fed from a distribution amplifier to the master monitor video input. The No. 2 sync generator is fed from No. 1 through the remote sync phaser just as in the case of being "slaved" to a remote sync generator. In this case, the phaser is adjusted to obtain a deliberate phase delay of the required amount from sync No. 1. It is noted that this displaces both vertical and horizontal intervals. The output of sync No. 2 is then fed to the DRIVE inputs of the master monitor, and this monitor switch is thrown to the DRIVE position. By adjustment of the phasing unit, the entire vertical and horizontal intervals of sync No. 1 may be properly positioned within the raster on the master monitor.

The only desirable modification of the master monitor is then the addition of vertical sweep expansion. Thus this method calls only for one simple modification as shown in Fig. 8.6H(2).

8.7 *Checking the Stabilizing Amplifier*

The stabilizing amplifier involves a wide variety of circuits, since it may be called upon to perform several corrective functions on the signal, as well as sync addition and video amplification (section 6.6). The clamper circuit basic operation for the GE type TV-16B stabilizing amplifier was described in section 8.4 of this chapter.

Involved in the proper operation of this type of amplifier is the adequate clipping of signals to remove noise peaks, white signal clippers, black signal clippers, and removal of the sync signal for purposes of reconstruction and re-insertion. All these functions use clipper circuits in various forms and modes of operation.

Fig. 8.7A (1) illustrates a simplified form of the black clipper circuit in the above mentioned stabilizing amplifier. The plate of the clipping diode V2 has a potential of plus 150 volts. Therefore, when the instantaneous voltage at the plate of V1 (also the cathode of V2) is greater than plus 150 volts, V2 is cut-off and the entire plate load of V1 is RL(1). Considerable gain is realized at this time. When the instantaneous voltage on the plate of V1 is less than 150 volts, V2 will conduct and the total plate load of V1 is RL(1) in parallel with the diode load. The gain of V1

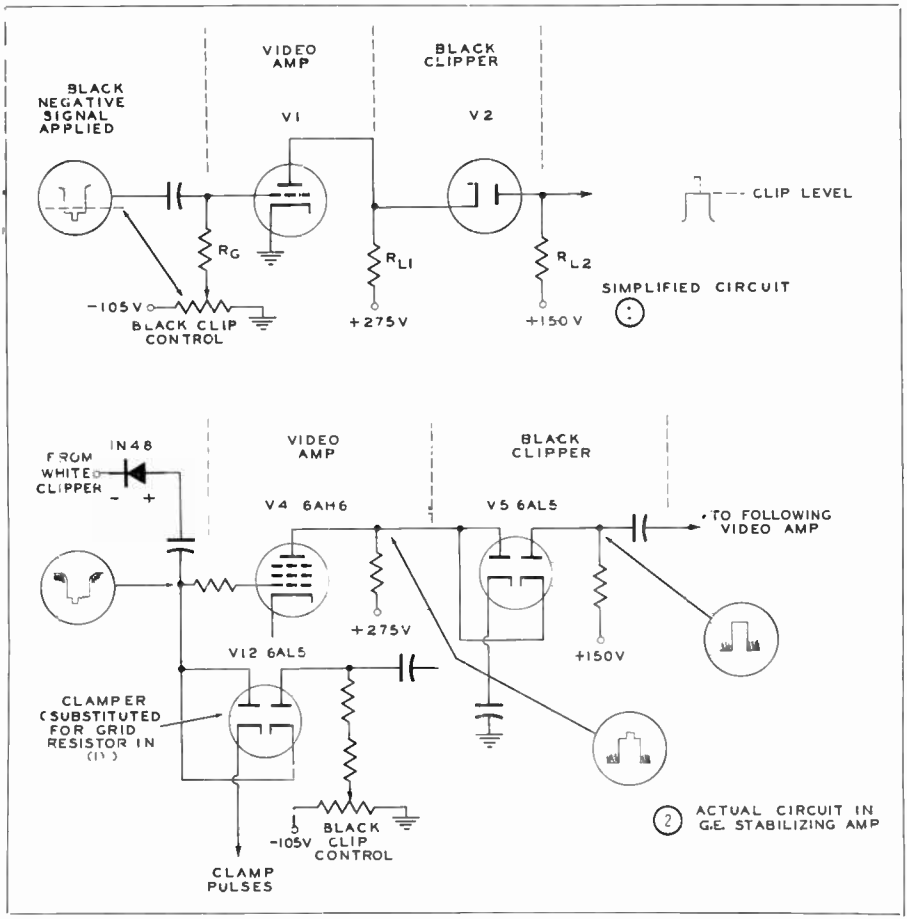

Figure 8.7A. Black clipper circuit.

at this time is much less than when V2 is non-conducting.

With black negative signal applied to the grid of V1, as the grid is swung farther negative, plate current is reduced and the cathode terminal of V2 therefore increases in the positive direction. Therefore, with proper adjustment of the black clip control, V2 may be made to conduct during the first part of the input signal, but become cut off during the remaining part. The point of diode cut-off may be chosen either as black reference level or blanking level. The gain of V1 is high when V2 is cut off, resulting in a sharp clipping point.

If now we replace the grid resistor R_G with a double-diode clamper tube, we have the actual circuit used in the GE stabilizing amplifier, as shown in (2) of Fig. 8.7A. The clamper assures that the clipping point action occurs from the same starting level on successive signals. Representative waveforms are shown, when viewed at line frequency.

The basics of the white clipper circuit are shown in Fig. 8.7B, and may be seen to be similar to the black clipper. A crystal diode is used in place of a diode tube. In this case a black positive signal is applied. Thus as the grid of V1 swings in the negative direction (white signal region) over a prescribed limit, the plate current is reduced making the tube plate (and crystal negative terminal) more positive, and the 1N48 will not conduct. The white clip control is normally set so that the circuit is on the verge of clipping whites when a standard signal is applied. Thus any white portions over this level will not appear at the output of the 1N48. (See block diagram, section 6.6.)

When local blanking is inserted in this amplifier (section 6.6) and relay K1 energized, the blanking signal appears at the cathode of the amplifier tube as shown in Fig. 8.7B. Thus the blanking signals are mixed with the output of the white clipper. It is recalled that the BLACK CLIP control

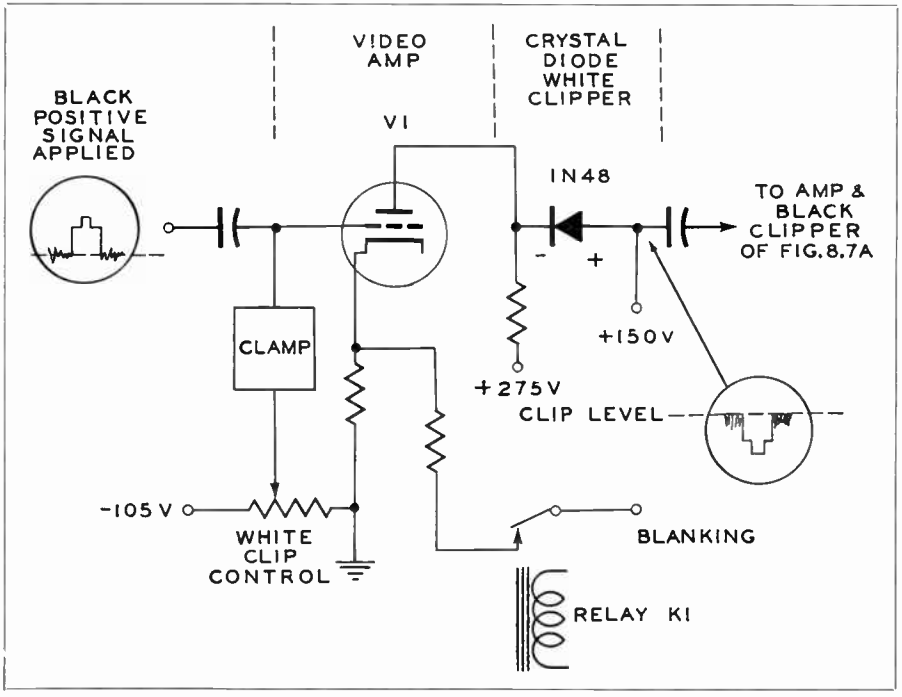

Figure 8.7B. Fundamentals of white clipper circuit.

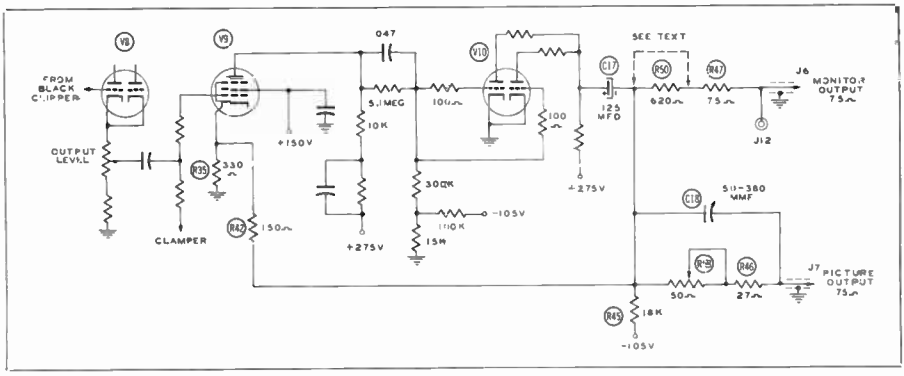

Figure 8.7C. Output circuits of G. E. stabilizing amplifier.

in the following stage is ordinarily set to clip the sync from the incoming signal at or near blanking level. By inserting local blanking as above, the *setup* of the signal may be increased if desired by adjusting the black clipper to operate at the proper point.

The output of the black clipper stage feeds the mixer tubes V6 and V7, which use a common plate resistor. The grid of V6 receives the signal from the black clipper, and the grid of V7 is fed by sync from V18. The bias on V7, and therefore its gain, is adjusted by the SYNC HT control. The composite output signal from this stage, with reconstructed sync, is fed through cathode follower V8 to the feedback output stage V9 and V10. An adjustable resistor in the cathode of V8 serves as the OUTPUT LEVEL control.

The output stage is of considerable interest to the maintenance engineer. Fig. 8.7C is the schematic, and the monitor output may be seen to comprise the special type of low-impedance plate coupled output described in section 8.3. V10 is a parallel connected dual-triode, preceded by pentode V9. Degenerative feedback is taken from the output through R42 back to the cathode of V9. Due to this degeneration, the junction of C17, R42, R58 and R45 assumes an impedance of approximately 10 ohms. To get a driving impedance of 75 ohms, the combination of R58, R46 and C18 is connected in series with the output (section 8.3). The monitoring output is uncompensated and fed directly from the low-impedance point. The ratio of the monitoring impedance to the picture output is determined by R50 and R47. A negative voltage is fed through R45 to the low impedance driving point to buck the positive voltage present at that point due to the cathode voltage of V9. This results in negligible DC voltage at the output.

Both picture and monitor output are the standard polarity, black negative. With the wire jumper on R50, shorting this resistor out, 1 to 1 ratio of monitoring output to picture output is obtained. This is used only for composite picture signals which need not exceed 1.4 volts. To obtain larger picture signals, the jumper is removed, which results in a 2/5 to 1 ratio of monitoring output to picture output, and is used when a picture output of 2 volts composite signal is needed.

Preventive maintenance procedures on the stabilizing amplifier are very important to keep it in top shape. Cleanliness is of prime importance. A small air blower and brush with long soft bristles should be a part of the tool stockroom. Relays and switch contacts should be kept scrupulously clean with a strip of fine crocus cloth immersed in carbon tet. Tube socket connections should be inspected often. Always watch for any discoloration in resistors or wiring when inspection is carried out. The regulation section of the power

supply should be checked at regular intervals.

Peaking transformers should be periodically adjusted for maximum performance as indicated previously for other equipment using such circuits. The amplifier described above employs shunt-peaking circuits. The overall response at the high end should be within ½ db of 100 kc output at 6 mc, and down no more than 3 db at 8 mc. For the 60 cycle square-wave test of low response, the tilt should be within 2%.

The usual precautions discussed previously in substituting dummy tubes for clampers, and completing the grid circuits through a suitable resistor at the clamped point must be remembered in aligning stabilizing amplifiers, when a sweep generator is used.

Two additional corrective adjustments are shown in the output circuits of Fig. 8.7C. C18 is a variable capacitor used to adjust the internal output impedance at the high frequencies of the picture output. The low-frequency adjustment for this internal output impedance is the potentiometer R58.

Whenever it is necessary to change the monitoring output level to 2/5 of the picture output, or from this level to the 1-1 ratio, these components should be readjusted for optimum driving impedance. This is carried out as follows: About 150 or 200 feet of RG-59/U coaxial cable is terminated in the picture output jack, J7. The sending end of the cable is then connected to the output of a sync generator from some distribution amplifier in the system. A good wide-band oscilloscope of at least 10 mc bandwidth is connected across the same sending-end terminals. The rise time of the pulse with the unit on should be 0.05 microseconds or faster. Reflections on the line will then appear as stair-steps on the screen. R58 and C18 are adjusted for minimum reflections, indicating optimum internal impedance to drive the line.

8.8 The Film Chain

Testing and maintenance of the television film chain is a highly specialized field. Engineers in the film department are seldom used elsewhere, and by the same token, other engineers who may be "utility" men in many departments seldom serve in the film division. It should be understood at the outset that many repairs and major overhauls of projectors are done either by field representatives of the manufacturer or by sending certain units to the factory. The proper testing, alignment and a large share of the maintenance, however, is carried out by the station film personnel.

To properly adjust and maintain a TV film chain, the engineer should become acquainted with test film designed to facilitate corrective measures.* The film most popularly used in TV stations is the Type TV35 and TV16, for 35mm and 16mm projectors respectively.

The test film is designed to indicate the condition of operation of those portions of the television film reproduction system which depend upon the relation between the film projector and the television system.

Use of the test film on a routine operational basis is recommended since it will indicate errors of adjustment and equipment malfunction before they might otherwise be detected.

To facilitate making extended servive adjustments, or to provide a suitable subject for the initial setup and adjustment of a film channel, there are available separate lengths of the alignment, low frequency, storage, and transfer characteristic sections. These sections may be cut into appropriate lengths, made into loops, and run continuously as the need arises.

Seven test sections and a selection of scenes comprise the complete film which is available in either 16 or 35mm. The

---

* "Television Test Film," Journal of the SMPTE, Volume 54, February, 1950. Illustrations from samples supplied through courtesy of the Society of Motion Picture & Television Engineers.

test section is a series of geometrical patterns intended to present information on the factors most likely to be degraded in television film reproduction. Each chart selects some particular failing of the average system and produces a signal intended to exaggerate and thus clearly define any deviation from normal operation. Perfect reproduction of all the charts is to be desired, but some degradation of each is to be expected. Experience will show the magnitude of these effects which may be considered normal for any particular system.

Scenes representative of many types of pictures encountered in television films are included in the reel as a final qualitative test of over-all results.

Sec. 1. Alignment (See Fig. 8.8A(1)).

This pattern defines the portion of the projected film frame which is to be reproduced by the television system and permits accurate alignment of the motion picture projector with the television camera. Eight arrow points have been positioned to touch the edges of the picture area to be scanned. This area is smaller than that of the whole frame. One and a half per cent of the projected aperture is cut at top and bottom of the frame to allow for small drifts in scanning and centering. The horizontal dimension is chosen to provide a standard four-to-three aspect ratio with the established height. All of the frame area beyond these limits has been striped with a "barberpole" effect. This striping must not appear in the television picture.

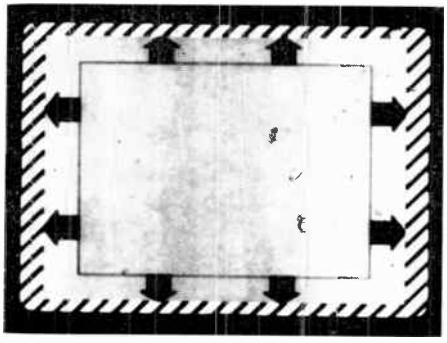

Figure 8.8A. (1).

It should be noted that the striped area is wider on the sides of the frame than on the top and bottom. This results from the fact that the standard projection aperture does not have a four-to-three ratio but is wider by some 3%. See the American Standards for Picture Projection Apertures, X22.58-1947 and Z22.8-1950.

Each vertical arrow head is 4% of the picture height and each horizontal arrow head is 4% of the picture width. Similarly, the arrow shanks are 6% of the picture height and width respectively. These dimensions permit rough estimates of the magnitude of scanning irregularities or misalignment through visual comparison of the effects in question with the size of the arrows. Specific values for misalignment obtained in this manner can be logged easily for future reference as part of a quality control program.

A rectangle formed by the lines connecting the arrow shanks encloses 80% of the active picture area. Investigation indicates that this area is reasonably well reproduced on most home receivers, even in the presence of scanning drift, inaccurate adjustment, and abnormal masking. No standard is implied, but a general memory of this area may be useful in the preparation of film carrying important information.

Sec. 2. Low-Frequency Response (See Fig. 8.8A(2)).

This test is made in two parts, each consisting of a half-black-half-white frame, with the dividing line horizontal. The first section has the black portion at the top of the frame and the second is black at the bottom. These charts produce 60-cycle square wave signals. When viewed on the waveform monitor set for field rate deflection, the signals should appear reasonably square. Serious tilting or bowing indicates incorrect low-frequency phase and amplitude response. When the system has been set for reproducing the first chart, the change to the second

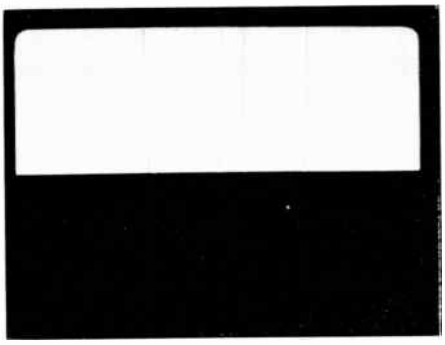

Figure 8.8A. (2).

chart should not necessitate large shading changes.

The chart which is black at the bottom also permits a check on the amount of flare encountered in iconoscope operation. Rim lights and beam current should be reset if the flare is excessive.

Sec. 3. Medium-Frequency Response (See Fig. 8.8A(3)).

The response of the television system to medium-frequency signals is of importance to picture quality. In this test, horizontal bars are used, first as black on white and then reversed. The bars have lengths equal in time of scanning beam travel to 2,5,12½, and 32 microseconds. These correspond to half-wave pulses covering an approximate fundamental frequency range from 15 to 250 kilocycles. Correct medium-frequency phase and amplitude response will be indicated by leading and trailing edges of the bars having no long, false gray tones. If, following the trailing edge of a bar, a streak appears having a tone similar to that of the bar (white after white, black after black) then it is reasonable to assume that the amplitude of the frequency represented by that bar is too great, or that its relative phase is incorrect. If the opposite occurs, as a white streak after a black bar, the fundamental frequency is too low in amplitude, and its relative phase is in error.

Sharp transient effects immediately following all bars are an indication of excessive high-frequency response. This condition will usually be clearly indicated in the test for resolution later in the film.

If very long streaking occurs in which the spurious signals are seen on the left side of the bars, as well as on the right, an investigation of the low-frequency response of the system should be made. Under these conditions close examination of the previous charts should reveal errors of waveform.

It is rarely possible to obtain perfect streaking-free reproductions of both the black-on-white and the white-on-black charts with one setting of the controls. This may be due with iconoscope operation, to the effects of wall sensitivity. A change in bias-light is usually required to compensate the charts exactly since the two charts do not have the same average transmission. The settings which produce very small streaking equally on both charts are usually preferred.

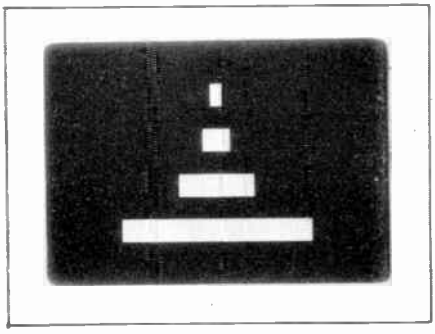

Figure 8.8A. (3).

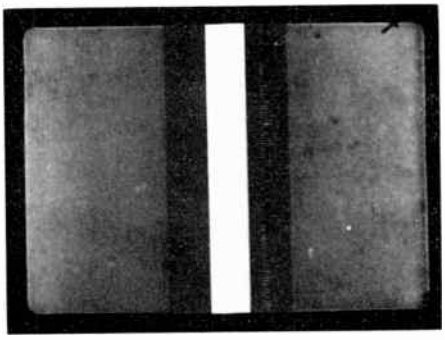

Figure 8.8A. (4).

Sec. 4. Storage (See Fig. 8.8A (4)).

Film pickup systems which utilize short pulses of light must store the charge produced by the pulse long enough to permit the charge image to be scanned. Since the beam starts the scanning process at the top of the picture, the storage time required is maximum at the bottom of the picture. Some pickup tubes will suffer from leakage to the extent that the charge image may be seriously reduced in amplitude by the time the beam reaches the bottom of the picture.

The chart which checks this characteristic is made up of vertical black and white stripes on a gray background. When viewed on the waveform monitor (set at field rate) this pattern will produce three lines representing white, gray, and black. Shading should be set to hold the gray line parallel with the blanking axis. If the white and black lines then tend to converge, the pickup tube does not have perfect storage. Perfect results are indicated when all traces are parallel. If the black-to-white amplitude at the bottom of the picture is divided by that at the top of the picture, the tube's storage factor is obtained. This is usually expressed in percentage.

Sec. 5. Transfer Characteristics (See Fig. 8.8A (5)).

The ability of a television system to reproduce shades of gray is indicated in this section through the use of step-density areas. The first chart consists of a white area and a black area that serve as limit references, along with a centrally placed window in which density steps appear.

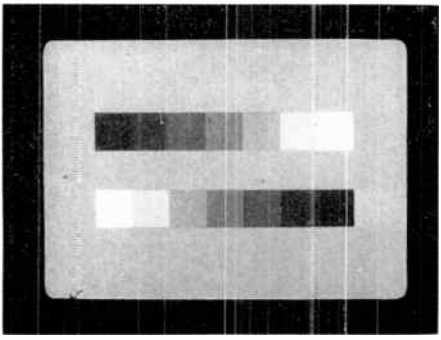

Figure 8.8A. (5).

The neutral gray background of this chart should be shaded flat and contrast and brightness settings adjusted to give normal waveform monitor amplitudes from the reference area mentioned. The waveform monitor should be set for line frequency. Once adjusted, all settings should remain untouched during the remainder of the period. In the center window, a total of seven density tabs will appear labeled A through G. These will be seen in groups of three, as ABC, BCD, CDE, etc. This permits all steps to be read on the same portion of the mosaic and independently of shading and black spot. Each step should be visually compared with the adjacent steps, both in the picture and on the waveform monitor, and each should be clearly defined. Saturation effects will be seen as a cramping together of adjacent steps. Experience as to the appearance of the tabs will establish a form from which variations can be noted.

The final chart in this section consists of two step density tablets showing all seven steps together. The direction of progression of the second tablet is opposite to the first. These permit rapid over-all check.

The effective transfer characteristic of a film pickup system is a function of both film density and projected illumination. This test film has a range considered to represent that normally encountered in practice. If significant compression occurs, projector brightness should be checked. Other factors, including beam current, bias-light, and clipper adjustments should be tested with a stationary slide.

Sec. 6. Automatic Brightness Control (See Fig. 8.8A (6)).

This test indicates the ability of the television system to follow change in average illumination of a series of scenes. It consists of a white disk centered in a black frame which enlarges

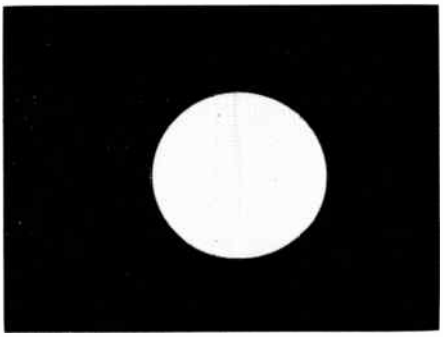

Figure 8.8A. (6).

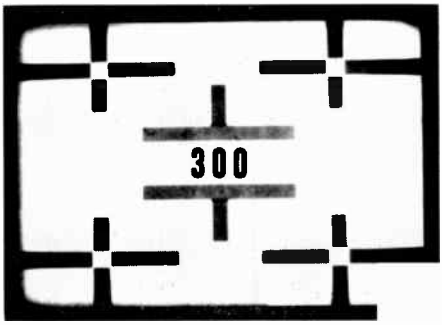

Figure 8.8A. (7).

slowly to fill the whole frame. As the white portion becomes larger, the brightness control should hold the black level constant. On the waveform monitor, the black signals should remain fixed in position relative to the blanking level. The first brightness changes on the film are both slow and even, so that systems with slow-acting control should be able to follow them accurately.

The second portion of the tests consists of sudden changes in white disk size from the smallest to one-third frame area and then two-thirds of the frame area. Experience will show how much error in black level setting results in these cases on a transient basis.

Sec. 7. Resolution (See Fig. 8.8A(7)).

Each of the five charts in this section is carefully calibrated to indicate the over-all system response at the number of lines printed in its center. Starting at 200 lines, the charts change at five-second intervals until the 600-line pattern appears. Each chart permits reading the response at six points within the frame. Care should be taken to note the response at the edges, as well as the center, of the picture.

Under abnormal conditions of "lateral leakage," resolution of a stored-charge picture degrades with time. This condition can be evaluated by noting the relative top and bottom resolution. If there is significant difference between the two, the system should be checked with a continuously illuminated slide. If the slide test shows the same resolution at both top and bottom and the film test does not, the pickup tube may be at fault.

The above presupposes that the projector has been properly tested for its inherent resolution with the visual test films available for that purpose.

Sec. 8. Typical Scenes (See Fig. 8.8A(8)).

To provide a qualitative check on the over-all results to be expected from good film, several scenes taken from material used specifically for television are included in the test reel. Utilization of this section will depend upon the operator's experience in judging acceptability and upon his memory of "how they looked before."

Also available from the SMPTE* are various test films for checking the sound channel of the projector. The 16mm

*Society of Motion Picture & Television Engineers, 40 West 40th St., New York 18, N. Y.

Figure 8.8A. (8).

Sound Service Test Film (SPSA) is a special type of print, both picture and sound. This film includes wide-frequency range title music, followed by sections of Buzz-Track (described later), sound focusing test, constant frequencies from 50 to 6000 cps, dialogue, piano music, and orchestral music. The buzz, focus, and frequency sections will show whether mechanical or electrical adjustments are correct. While the one dialogue and three music sections, which were specially prepared for this film and are consistent with the best quality obtainable today, indicate overall reproducer sound quality. Accompanying titles explain the purpose of each section, while the instruction book supplied with the film explains in detail why the various tests are made and how the results of those tests should be evaluated. The film indicates whether poor sound quality is the fault of the projector or of the print being projected.

The 16mm Buzz-Track Test Film (Z22.57) is an original negative and is used for checking the sound scanning-beam placement in the projector. The track consists of an 0.076 in. opaque center with a frequency of 300 cps on the picture side and frequency of 1000 cps on the sprocket side. These tracks are accurately located on the film so that when the film is run on a projector with correct adjustment and free from weave, no sound is heard. Either or both of the 1000 and 300-cycle tones will be heard, however, if the photocell scanning-light beam is out of position.

Fig. 8.8B is a simplified schematic of a typical television camera iconoscope amplifier. This is from the latest modified version of the RCA TK-20A Film Camera. The arrangement of the output picture polarity switch is shown to the far right of the drawing. For aligning the circuits, the oscilloscope with its detector probe is connected across R32 at the terminals of this polarity switch. With the iconoscope disconnected, T9, T8, T7 and T6 are first aligned for maximum high-frequency response as outlined previously. The overall response of these stages should be essentially flat to 6.5 mc. The above alignment procedure should be carried out stage-by-stage by injecting the sweep generator signal at the grid of each stage in turn. In injection of the sweep signal at the grid of V15 and on back to the input stage, the high-frequency compensation control in the grid of V15 should be set in the maximum "out" position. The response should be good to 6.5 mc without the aid of the high-peaker circuit.

This control, as well as the low-frequency compensation circuit in the grid of V14, is left in the "out" position for low-frequency testing. Tilt should be less than 10% with a 7.5 kc square wave signal. Note the effect of the compensation adjustments on the scope pattern for effectiveness of control. In practice, the high-frequency control is adjusted on a picture signal for best resolution and minimum white overshoot, while the L-F compensation is adjusted for minimum black or white smear.

When it has been ascertained that the amplifiers in the camera are properly aligned and frequency response is normal, any severe degradation of signal as determined by the above test film procedure may result from other than amplifier factors. One of the more common occurrences is the effect of edge-flare which is emphasized in section 2 of the previously described test film. Since flare is most noticeable on large black areas or scenes illuminated by low-key lighting, and at the bottom of the picture, the factors which affect flare should be varied under conditions of no illumination on the mosaic of the iconoscope. Whenever an iconoscope tube is changed in a film camera, it is usually necessary to readjust the ratio of iconoscope beam current to amount of rim light. Due to the inherent non-uniformity of iconoscope pickup tubes, no rigid relationships in current or light intensity can be set up. Limitations of these values and procedure for determining the correct adjustments

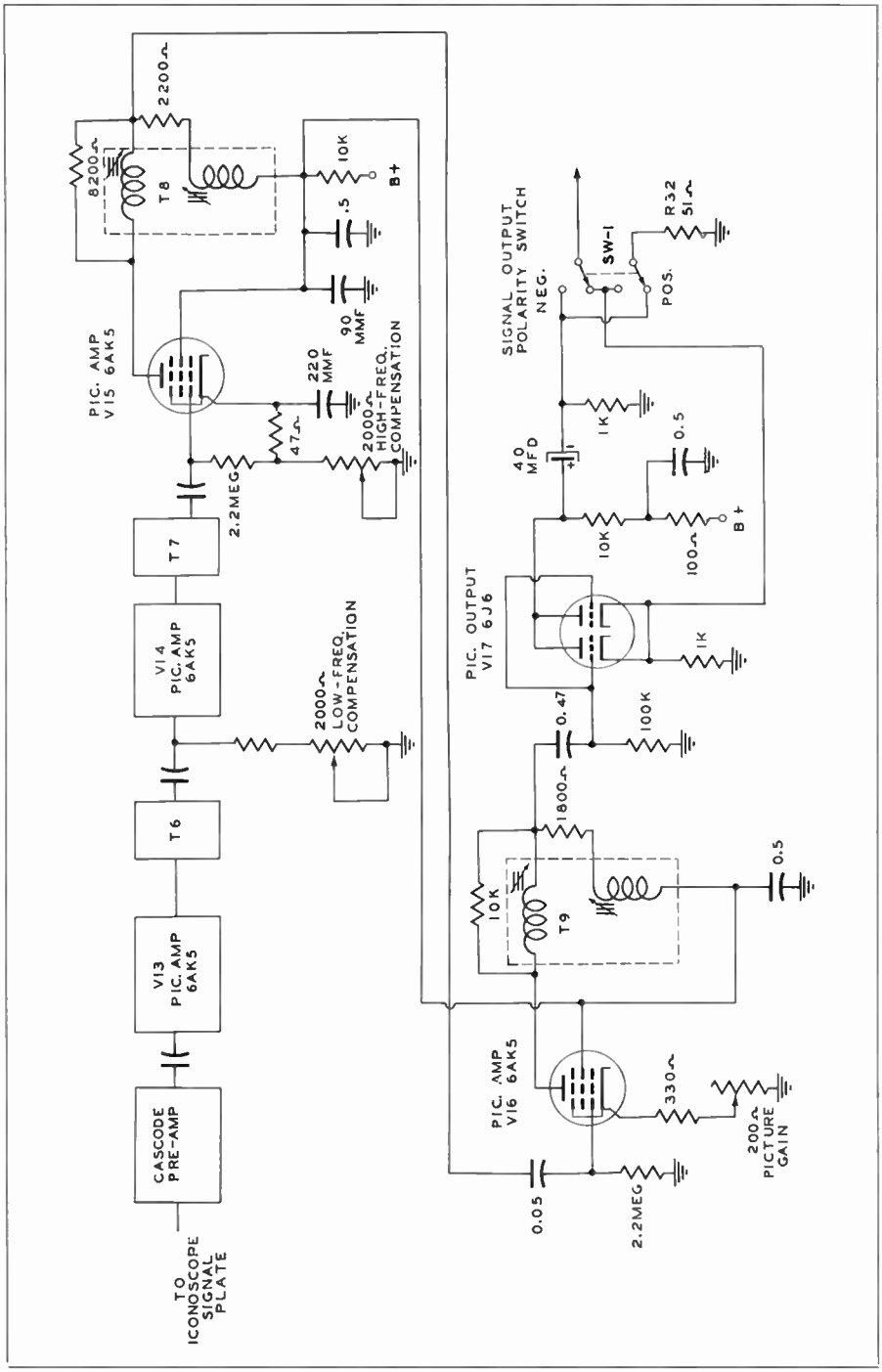

Figure 8.8B. Simplified schematic of latest modified version of the RCA TK-20A film camera amplifier. Peaking transformers T6 and T7 are series-shunt circuits as in T8 and T9.

may, however, be outlined as a guide.

The object is to obtain a flat, black field by using the required amount of rim lighting for a given beam current, with no illumination on the scanned area of the mosaic. This first adjustment assures that edge and bottom flare is not dependent upon scenic content of the film. During film transmission, the injection of the proper shading signal is then adequate to prevent noticeable flare. The normal range of iconoscope beam current with average sensitivity, resolution and storage properties, is from 0.1 to 0.2 microamperes. As a general rule, beam currents lower or higher than this range results in an inferior picture. Therefore, this factor serves as a starting point in adjusting for elimination of flares. It has been found in practice that best results are obtained when the maximum allowable beam current is used consistent with available rim-lighting assemblies. Thus the beam current is raised to the upper range of this limit, 0.2 microamps or slightly under, and rim-lighting adjusted to get minimum flare, under darkened mosaic conditions. Some TV film cameras have been modified to accommodate an ordinary slide projector such as the Kodak 1A as source for rim lighting. This projector is mounted on a sliding rail underneath the camera, and the projected light is beamed through the lower glass seal of the iconoscope. Special types of infra-red filters are often used in this projector in the mountings available for slides, resulting in increased resolution by eliminating most of the incandescent light source infra-red, to which the iconoscope is rather sensitive. This projector type of edge-lighting has proved more satisfactory than the former pilot-light assemblies.

Another factor not inherently involving the amplifier is that of storage, tested by section 4 of the previously described test film. In some cases this lack of proper storage characteristic of the iconoscope cannot be remedied except by replacement with a new pickup tube. Many times, however, the fault is not in the tube, but in mis-adjustment of rim-lighting, back-lighting (bias lighting), or improper control of stray lighting effects. From the description of section 4 of the test film, it was noted that most accurate interpretation of storage characteristics is obtained by observing the pattern on the waveform monitor set at field rate. It is important that the engineer realizes that under actual film picture transmission, shading controls may be adjusted to indicate even shading on the CRO under conditions of poor storage characteristics. What then results is an extreme loss of picture detail at the bottom of the raster, since resolution is being sacrificed to obtain even shading. This points up the importance of special test film or slides which indicate system degradation before it becomes too apparent in the home receiver.

To minimize iconoscope leakage, it is necessary to use the least possible amount of edge and back-lighting which is adequate to suppress flare and still allow sufficient sensitivity of iconoscope function. Any presence of stray light which may find its way to the mosaic will obviously cause the charge stored upon its surface during vertical blanking time to deteriorate by the time the scanning beam reaches the bottom. Therefore adjustments other than those in the amplifier chain may be summed up as follows:

1. Use maximum amount of beam current for any particular iconoscope which, in conjunction with intensity and placement of rim-lights, results in a black, Flare-free field when NO light strikes the picture portion of the mosaic.

2. Adjust intensity and position of rim-lighting for minimum edge-flare under the above conditions.

3. Check for stray light falling on the mosaic. This may actually come from improperly positioned rim lighting, or too high intensity of rim or back lighting. Adjust back-lighting for best sensitivity, resolution, and lowest picture "noise."

Preventive maintenance on the projector mostly involves routine cleaning schedules. The major source of trouble from foreign matter occurs at the picture aperture, since pile-up of emulsion, lint and dust form "horns" at this point. Frequent cleaning is mandatory. An ordinary pipe cleaner bent at right angles a short distance from one end is often used by operators for this purpose. With the film gate swung outward to expose the picture aperture, and the projection lamp turned on, the pipe cleaner is run around the side of the aperture until a sharp outline is obtained as revealed by the light projected on a clear surface.

The glass surfaces in each end of the projection lens should be cleaned approximately once a month. With the lens removed from the projector, a good grade of commercial lens paper is used. Extreme care must be exercised in lens cleaning to avoid even slight scratches on the glass surface. At the same time, the shutter housing window just ahead of the picture lens (where used) should be cleaned with a soft lint-free damp cloth. Some stations advise their maintenance department to clean this window daily.

At approximately four month intervals, the condenser lens should be cleaned using a damp cloth to wipe both surfaces thoroughly, followed by applying a clean dry cloth. The reflector should be cleaned at the same time. The glass surface toward the lamp should be cleaned with a damp cloth, and polished with a clean dry cloth.

The lubrication schedules included in the manufacturers instructions for any particular projector should be rigidly followed. It is highly important that the exact type and grade of oil or grease specified in the instructions be adhered to in practice. All projectors have quite a few lubrication points; some requiring oil as often as every 8 hours of operation, others needing attention only over intervals as long as a year, depending upon usage. Care should be exercised not to oil excessively, or to spill oil where it may reach the film. The resulting pile-up of emulsion, dust and lint degrades both picture and sound.

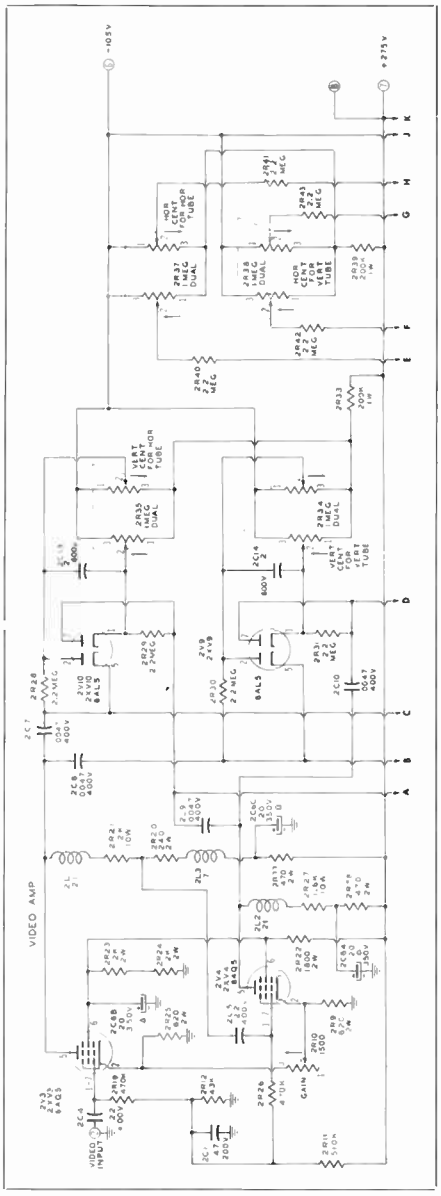

Figure 8.8C.

Due to the importance of properly adjusting the various shading controls on the film camera during transmission, some film camera-control units employ dual oscilloscopes so that simultaneous display of horizontal and vertical wave-

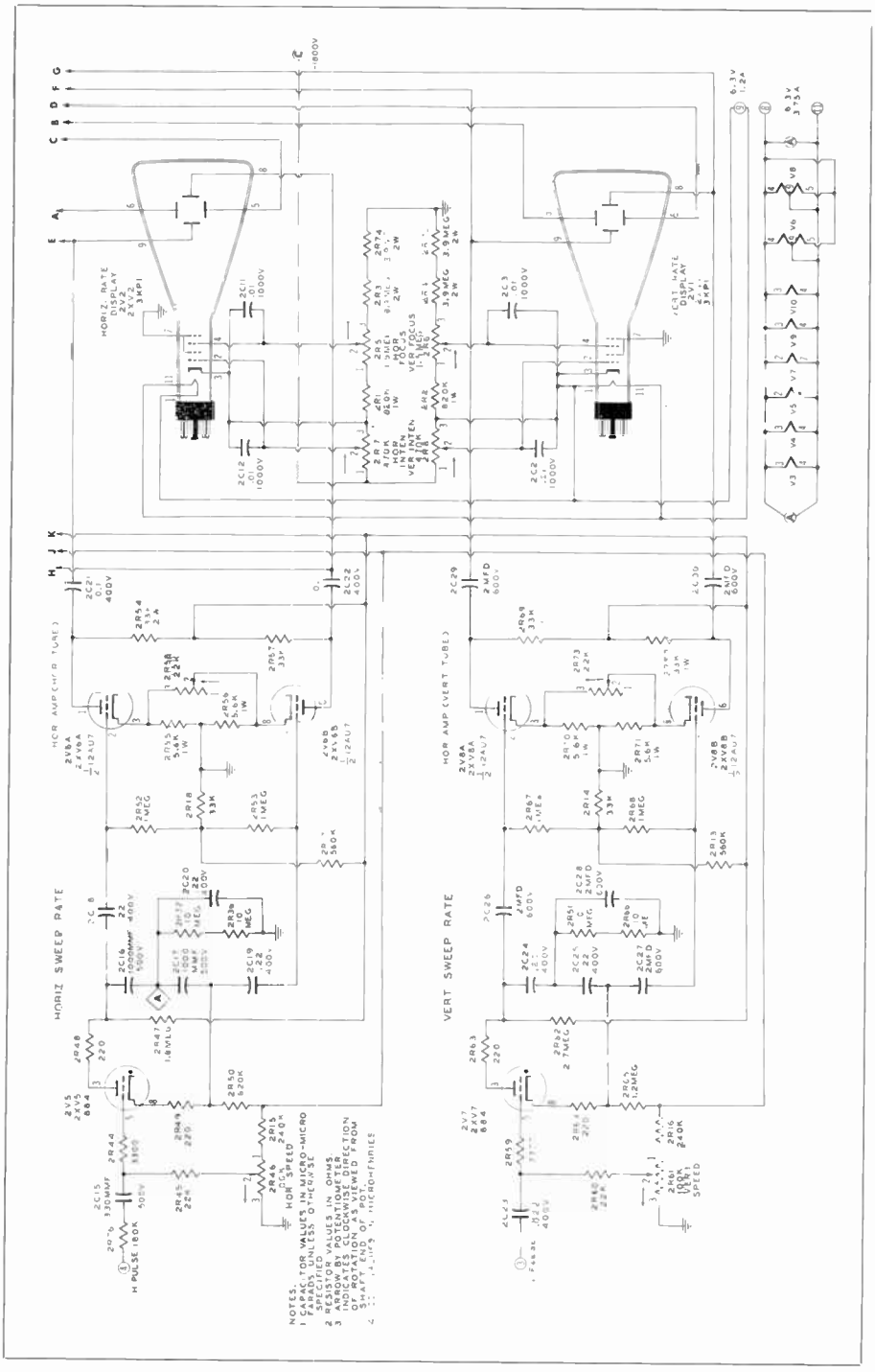

Figure 8.8C. Waveform monitor Elementary diagram. Courtesy G. E.

form may be obtained. To acquaint the reader with this type of circuit function, further technical details of the General Electric film control unit illustrated and basically described in section 6.7 (see Fig. 6.7N) are presented here. Only the waveform monitor is discussed, since the picture monitor is more or less conventional as described in previous sections concerning video picture monitors.

The schematic of the dual waveform monitor is illustrated in Fig. 8.8C. Fig. 8.8D is the schematic of the RF power supply with which the TV engineer should become familiar. Negative high voltage for the CRO waveform monitor tubes is generated in this supply which is enclosed in a shielded box. A 6AQ5 pentode operates as a free-running oscillator, developing high voltage AC across the transformer winding. This AC is rectified by a 1X2, resistance-capacity filtered and supplied to the cathode, grid and focusing grid of each cathode ray tube. High voltage adjustment is made by tuning the oscillator with a variable capacitor. Correct voltage for the monitor is -1800 volts. Extra sweep deflection on the CRO tubes for special application can be obtained by lowering the voltage.

Video for the Waveform Monitor (see Fig. 8.8C) is taken at high level from the Picture Monitor video amplifier and fed to the video amplifier inverter, V3. A part of the signal from the plate of V3 drives the grid of V4. V3 and V4 together drive the vertical deflection plates of the two cathode ray tubes V1 and V2 in push-pull. Double diodes V9 and V10 are connected as black level DC restorers across the cathode ray deflection plates in order to hold the black level constant with varying signal. 2R34 and 2R35 vertical centering controls are dual centering controls which provide centering action by varying the DC voltages to which the diodes restore.

Gain adjustment in the waveform monitor is independent of the picture monitor contrast control and is provided by the GAIN control, R10, connected between the cathodes of V3 and V4. This control changes the degeneration in the cathode of V3 and V4. With R10 set for zero resistance the cathodes are connected together. Thus since the signal currents cancel there is no degeneration and hence high gain. With R10 set for maximum resistance the cathodes are isolated and each stage acts as a cathode degenerated amplifier and the gain is cut down.

The sweep circuits are divided into two horizontal sweep sections which furnish horizontal sweeps for the cath-

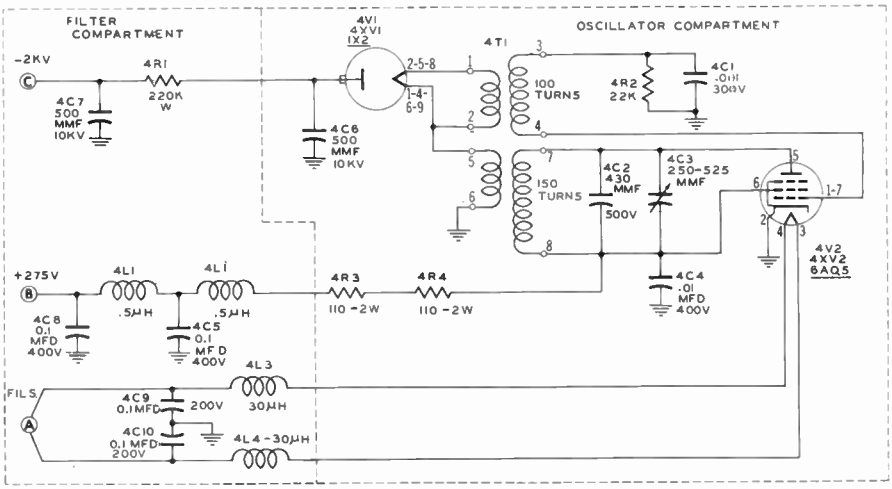

Figure 8.8D. RF Power supply elementary diagram.

TUBE				GRID				PLATE				CATHODE				SCREEN		TUBE
					VOLTAGE				VOLTAGE				VOLTAGE					
SYMBOL	TYPE	FUNCTION	OPERATING CONDITION	PIN	D-C	A C P-P	WAVEFORM	PIN	D-C	A C P-P	WAVEFORM	PIN	D-C	A C P-P	WAVEFORM	PIN	VOLTAGE	SYMBOL
2V1	3KP1	C. R. T.	NORMAL	2	-100C	C		7	0	0		3	-175C	0		14	-18C	2V1
2V2	3KP1	C. R. T.	NORMAL	2	-100C	C		7	0	0		3	-175C	0		14	-18C	2V2
2V3	6AQ5	VIDEO AMPLIFIER	SW ISI REFERENCE	12.7	2C	33		5	105	75		2	27.5	18		6	10C	2V3
2V4	6AQ5	VIDEO AMPLIFIER	SW ISI REFERENCE	12.7	2C	18		5	100	70		2	27.5	6		6	10C	2V4
2V5	6BN	HORZ SWEEP GEN.	NORMAL	5	-21.5	6	HOR.	2	7	22	HOR.	8	-5.4	22	HOR.			2V5
2V6A	1/2 12AU7	HORZ. SW. AMPL.	NORMAL	2	14	22	HOR.	1	15C	0E	HOR.	3	3C	12	HOR.			2V6A
2V6B	1/2 12AU7	HORZ. SW. AMPL.	NORMAL	7	14	22	HOR.	6	14E	98	HOR.	8	2C	12	HOR.			2V6B
2V7	6BN	VERTICAL SWEEP GEN.	NORMAL	5	-11.5	20	VERT.	2	12	20	VERT.	8	-3	20	VERT.			2V7
2V8A	1/2 12AU7	VERTICAL SWEEP AMPL.	NORMAL	2	14	20	VERT.	1	14E	100	VERT.	3	10.5	5.2	VERT.			2V8A
2V8B	1/2 12AU7	VERTICAL SWEEP AMPL.	NORMAL	7	14	20	VERT.	6	147	103	VERT.	6	10.5	5.2	VERT.			2V8B
2V9	6AL5	DC RECT.	NORMAL					2	-23	3.2	VERT.	5	DC NOT ATTEMPT TO READ	66.0				2V9
2V9	6AL5	DC RECT.	NORMAL					7	DC NOT ATTEMPT TO READ	80	VERT.	1	20.5	3.2	VERT.			2V9
2V10	6AL5	DC RECT.	NORMAL					2	-18.5	3.2	VERT.	5	DO NOT ATTEMPT TO READ	65	VERT.			2V10
2V10	6AL5	DC RECT.	NORMAL					7	DC NOT ATTEMPT TO READ	6C	VERT.	1	18.5	3.5	VERT.			2V10
4V1	1X2	NEG. H. V. RECT.	NORMAL					CAP	-100C			FIL	DC NOT ATTEMPT TO MEASURE					4V1
4V2	6AQ5	H. V. R. F. OSC.	NORMAL	127	-3C	DC NOT MEASURE		5	26C	DC NOT	MEASURE	2	0	0		6	28C	4V2

CAMERA MONITOR DUAL CHASSIS NORMAL

Figure 8.8E. Socket voltage and waveform chart, dual monitor. Courtesy G. E.

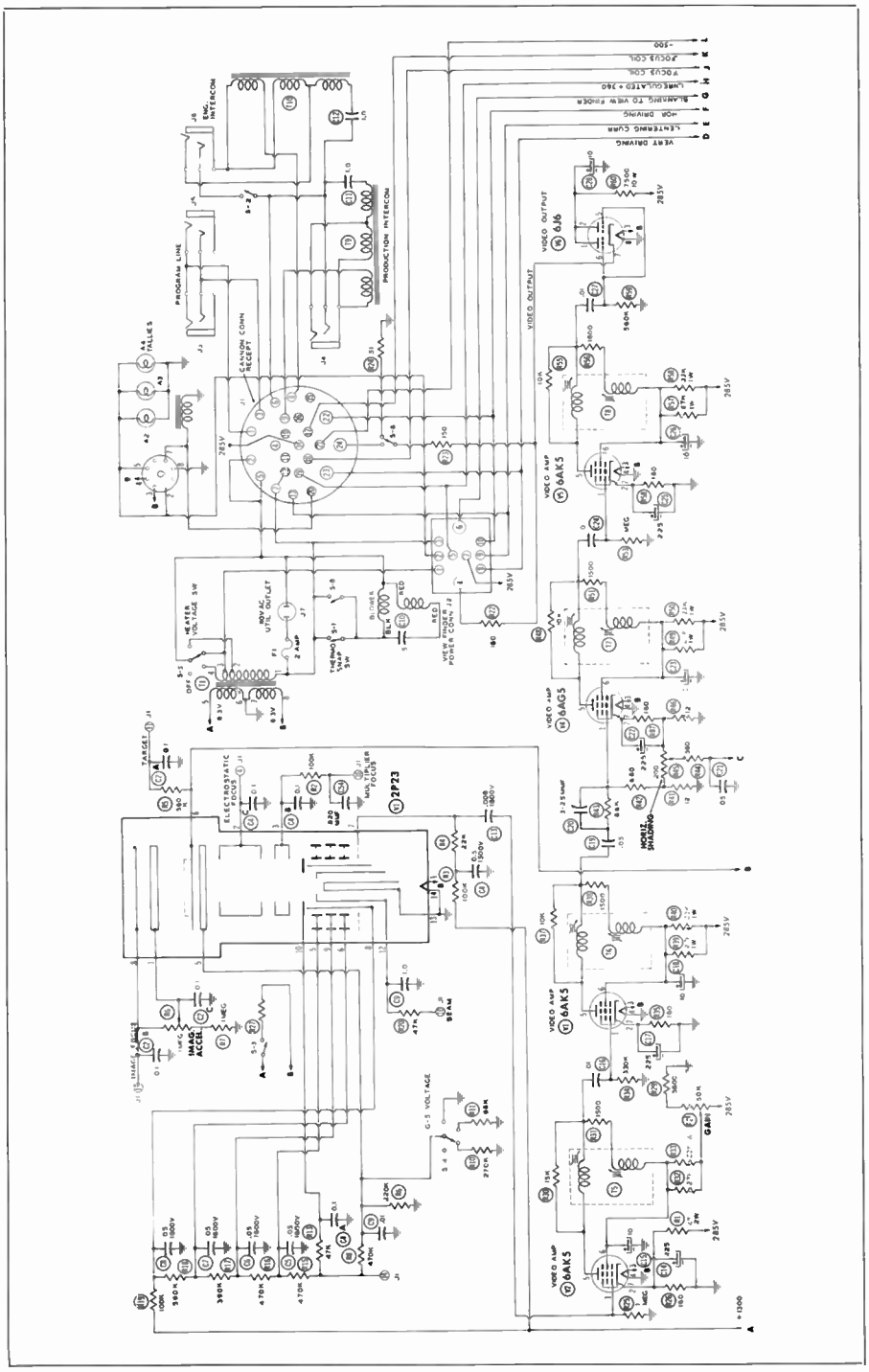

Figure 8.9A.

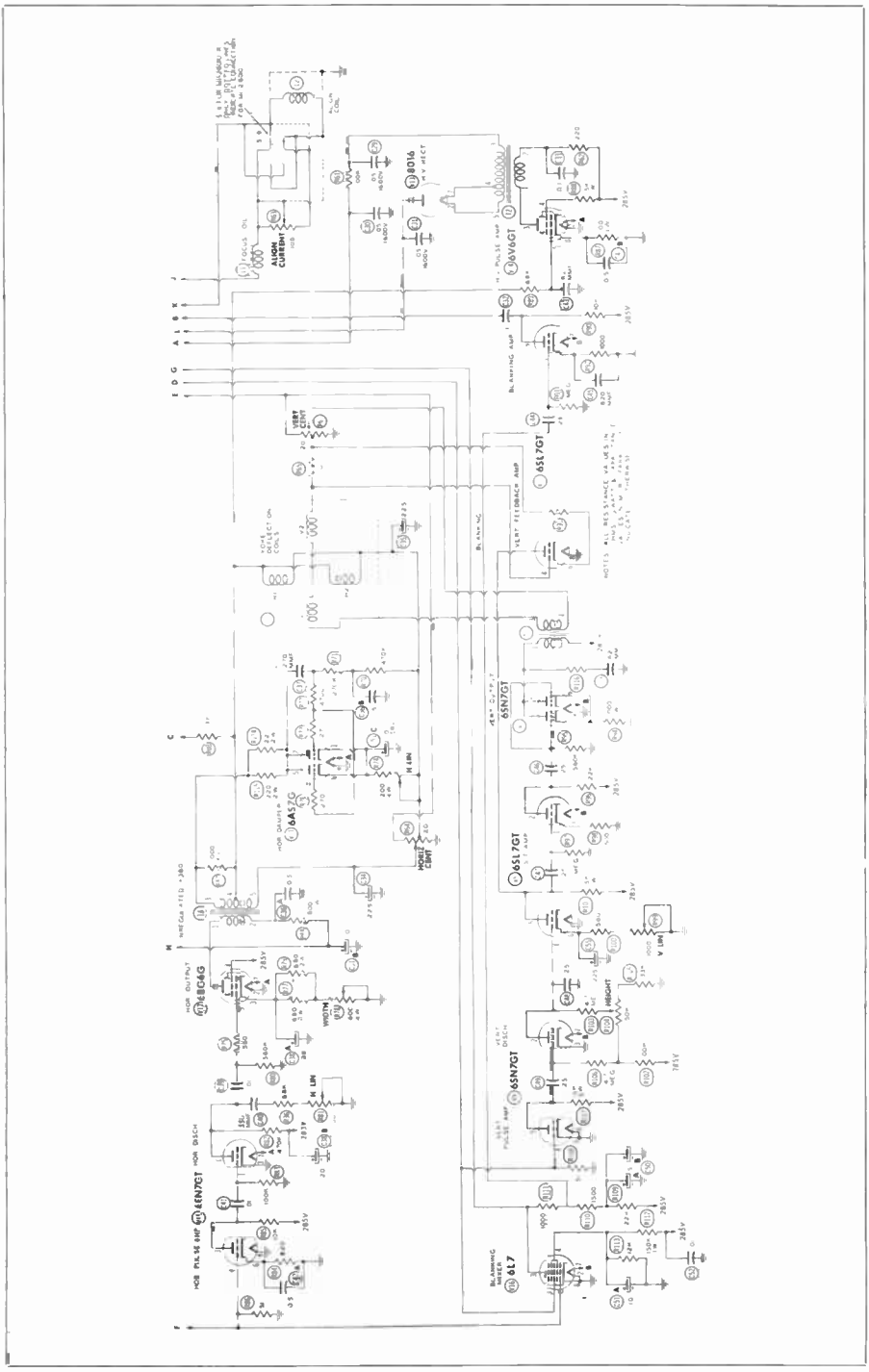

Figure 8.9A. Schematic diagram of RCA TK-30A camera.

ode ray tubes, V1 and V2. One section consisting of tubes V7 and V8, furnishes positive and negative sawtooth voltages at one-half vertical sync pulse rate to tube V1. The other section consisting of tubes V5 and V6 furnishes sawtooth voltages of both positive and negative polarity at one-half the horizontal sync pulse rate to tube V2. Except for time constants the circuits are similar. V5 and V7 are Type 884 thyratrons operated as relaxation oscillators. V6 and V8 are double triode 12AU7's connected in push-pull to the deflection plates of V1 and V2. The amplitude of the output of V6 and V8 is controlled by R58 and R73 which vary the degeneration in the cathodes of the two tubes. With the control at maximum resistance each cathode has essentially an unbypassed cathode resistor and hence a low gain. With minimum resistance in the control the two equal sawtooth voltages of opposite polarity on the two cathodes are mixed and thus cancel, giving zero sawtooth potential on each cathode; this is the same as having the cathode resistor bypassed, hence raising the gain of the stage. R46 and R61 are the vertical and horizontal speed controls of the relaxation oscillators, V5 and V7.

V5 and V7 are push-pull relaxation oscillators which have been modified by the addition of compensation circuits to increase their operating stability, and to provide equal magnitude and opposite polarity sawtooth waves even though the positive and negative voltages are not equal. For example V5, has the resistors R32, R36 and capacitor C20 added in parallel to preserve the voltage balance between C16 and C17 and thus equalize any inequalities in the plate and cathode sawtooth voltages.

C16 charges toward +275 by drawing current through R47 and C17 charges toward —105 through R50. When V5 fires it provides a low resistance between C16 and C17 discharging them to the same potential if the two saw-tooth voltages are equal. If the voltage across C16 is larger than that across C17, a DC voltage will appear at point A, since C20 is large enough to bypass the sawtooth component. This DC voltage will lower the charging voltage for C16 and increase it for C17 thus rebalancing the two voltages.

As the condensers C16 and C17 charge, they build up plate voltage on V5. Just before this voltage becomes large enough to cause the gas to ionize, a sync pulse is introduced on the grid of the tube, firing it and discharging the capacitors. When the capacitor voltages drop to a value too low to sustain ionization, the tube cuts off, and the capacitors begin to charge on the next cycle. Speed of the oscillation can be controlled by setting the grid bias; correct setting of the speed is that which shows two frames on the vertical rate tube, two lines on the horizontal rate tube.

Fig. 8.8E is the "corrective" chart supplied by G. E. for this monitor, and is a Socket Voltage and Waveform Chart. Troubles in the unit, not a result of tube failures, can be isolated by reference to the voltages listed on this chart. A 20,000 ohm-per-volt meter should be used. If voltages appear correct the engineer checks the waveforms.

8.9 The TV Camera

Illustrated in Fig. 8.9A is the complete schematic diagram of the RCA TK-30A camera. Tube V1 is the image orthicon tube which may be any of the standard broadcast types such as the 2P23, 5769 or 5820. The latter type is one of the most popular for either field or studio use. It is recalled that minimum current corresponds to picture highlights, and maximum current to the black signals or blanking intervals. The signal plate load resistor for the pickup tube is the 22,000 ohm R4. During black signals or blanking, the maximum current through R4 produces a negative swing at the top of the resistor where the Grid of V2 is driven, thus the signal polarity is black-negative. V2 is the first stage of a conventional five-tube R-C coupled video pre-amplifier, the output stage V6 serving as a cathode-follower to pin No. 24 of the cannon connector J1. It should be noted that

the video output of V3 is coupled through a "high-peaker," consisting of resistors R43-42 and capacitors C20-19, to the grid of V4. High-frequency components are boosted in this circuit, and low-frequency components of the signal are attenuated. Remember the two functions of this circuit; (1) to compensate for the poor high frequency characteristics of the V2 input circuit (section 2.3), and to minimize low-frequency microphonic effects originating in V2 and V3.

Overall amplifier gain is adjusted by varying R28 in the screen circuit of V2. This is the pre-amp GAIN control located on the rear of the camera as shown in Fig. 8.9B. A horizontal shading control is also incorporated in this camera. R45, in the input circuit of V4, controls the amplitude and polarity of a compensating sawtooth voltage from the horizontal output transformer T4. The SHADING control on the rear of the camera is shown in Fig. 8-9B. It will be noticed that this is a different arrangement than that shown in section 6.2, this being a later production model of the RCA line. In the studio set up, the studio-type camera control unit contains another SHADING control which applies a corrective saw shading from the vertical transformer, hence affecting vertical shading. The field-type camera control contains a screwdriver adjusted shading control. Most of the shading defects of an image orthicon tube may be corrected by horizontal shading.

Horizontal driving pulses fed from the sync generator through the camera control unit to pin No. 22 of the camera cable connector (J1) are applied to the grid of one triode section of V15. This

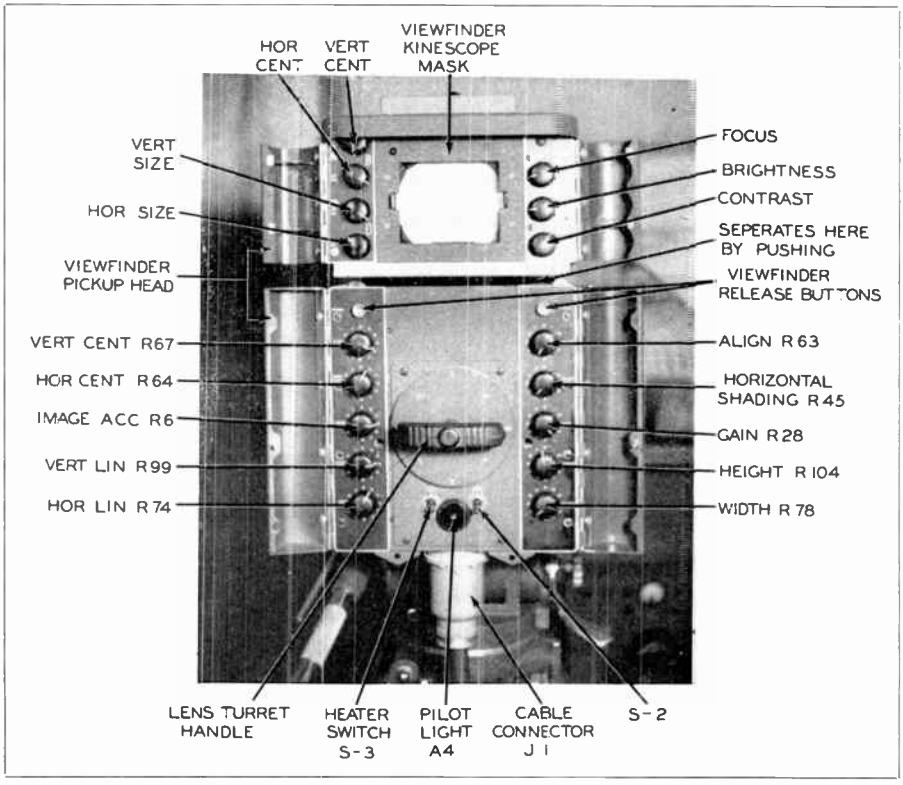

Figure 8.9B. Rear view RCA TK-30A camera. (Viewfinder hood removed.) (Viewfinder release buttons pressed and viewfinder raised slightly to show separation.)

section of the tube serves as a pulse amplifier to drive the second section serving as the discharge tube. In this discharge circuit, potentiometer R81 is an auxiliary horizontal linearity control affecting the center portion of the raster. This control alters the waveform of the voltage applied to the grid of horizontal output V12, and determines the point of conduction. The location of R81 is illustrated in Fig. 8.9C. Potentiometer R78, in the cathode circuit of V12, adjusts the bias of this stage, hence the amplitude of the output sweep voltage. This is the WIDTH adjustment on the rear of the camera, shown in Fig. 8.9B. V12 is coupled to the damper tube V11 through transformer T4, and is also coupled to the horizontal deflection coils through the HOR CENT control R64 shown on the schematic. The location is also shown in Fig. 8.9B. The fundamentals of this type of sweep circuit were described in Chapter 2. R52, R114 and R115 in the secondary of T4 (input to horizontal damper V11) are used to prevent oscillations in the damper circuit. Should these oscillations occur, narrow, closely-spaced vertical bars would appear on the left-hand side of the picture.

The amplifying section of V9 receives vertical driving pulses from pin No. 23 of camera cable connector J1. The output is used to drive the grid of the vertical discharge section of V9. The amplitude of this sawtooth output is determined by the adjustment of R104, which is the HEIGHT control illustrated in Fig. 8.9B. This saw voltage is amplified by V8, a two-section in cascade resistance-coupled circuit. Potentiometer R99 in the cathode of the first amplifier stage serves as the vertical linearity control. The location on the camera is shown in Fig. 8.9B. The amplified saw from V8 drives the grid of the vertical output stage V7, which in turn is coupled to the vertical deflection coils by transformer T3. Vertical centering is adjusted by R67. The centering controls obtain their centering voltage from the return circuit of the regulated power supply, pin No. 14 of J1.

The high-voltage required for the multiplier sections in the pickup tube

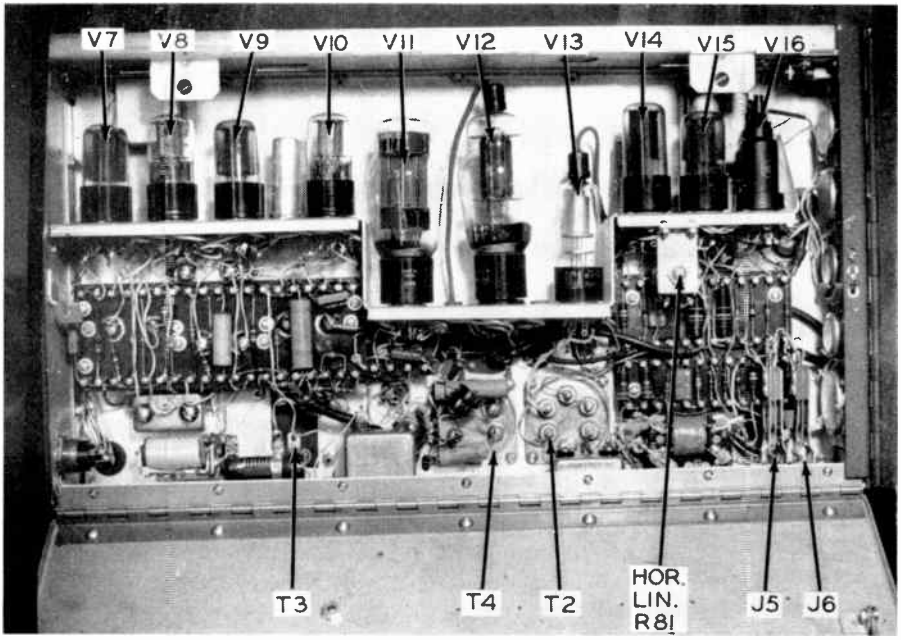

Figure 8.9C. Side view — left.

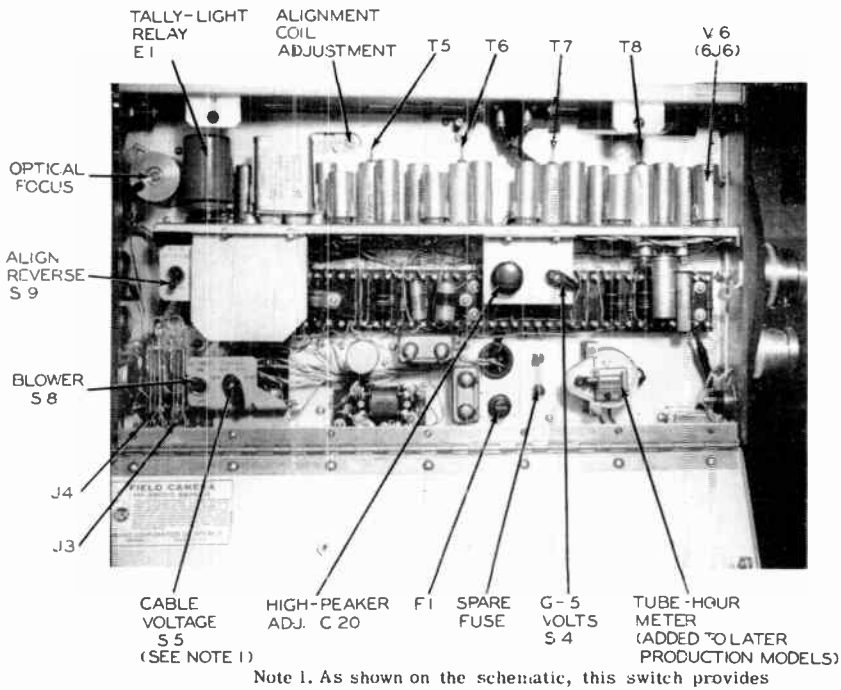

Note 1. As shown on the schematic, this switch provides voltage adjustment for filament supply transformer T-1 to compensate for voltage drops in varying length in interconnection cables up to 1000 feet.

Figure 8.9D. Side view — right.

is supplied by the conventional "flyback" power supply with an 8016 rectifier (V13) and a 6V6-GT pulse amplifier V14. The pulse voltage appearing at T4 across the H deflection coils is applied to the grid of pulse-amplifier tube V14 through R89. In the retrace flyback time the high-voltage pulse produces a rapid change of plate current in V14, which results in an induced high voltage pulse in the secondary of T2, which is tapped to supply the required filament voltage to the high voltage rectifier V13. This half-wave rectifier pulses the filter circuit R61, C29 and C30, delivering the high DC potentials for V1. The unbypassed screen-grid of tube V14 provides a degenerative action which aids in maintaining constant output.

Fig. 8.9D illustrates the components in the right side of the camera. Relay E1 shown in this view (and adjacent to tally lights in schematic), is actuated from a switch in the switcher-mixer unit. When closed, this supplies the necessary voltage for tally lights A2, A3 and A4. Jacks J3 and J4 provide telephone channels for use by production personnel at the camera. A double plug on the headset connects one earphone to program sound and the other earphone and a microphone to J4 for intercommunication. Jacks J5 and J6 on the other side of the camera (Fig. 8.9C) are supplied for the cameraman. The blower motor is normally controlled by the manual switch S8 shown in Fig. 8.9D, but if, by accident, this switch is left "OFF," a thermosnap switch (see upper center

section of schematic) powers the motor automatically when the camera temperature rises excessively.

As described in Chapter 2 and elsewhere in this text, camera blanking is driven from the same pulses used for horizontal and vertical driving of the sweeps. Horizontal driving is received on pin No. 22 of J1, and vertical driving on pin No. 23. Both of these signals are applied to the two grids of V16 as shown and mixed and clipped in this stage. The composite blanking signal is then amplified in one triode section of V10, and coupled to the target mesh of the image orthicon tube. This drives the target into the negative region during retrace time and prevents appearance of retrace lines in the picture. The target becomes sufficiently negative so that all beam electrons are repelled during this interval, providing a reference potential corresponding to black level. Keyed clamping circuits then maintain this DC potential at the same signal reference throughout the system.

Special precautions are necessary in checking frequency response, and in aligning peaking circuits in a camera pre-amplifier. For example, it is suggested that the input capacitor C13 be disconnected from grid terminal pin No. 1 of V2. The image orthicon tube should be de-activated by removing the diheptal socket (Fig. 8.9F) from the tube base. A switch S6 may be noted in series with the coax line output at the upper right of the schematic diagram. This switch is actuated by the turret handle such that when the handle is squeezed to permit turret rotation, the switch closes to insert a 51 ohm resistor, and opens the coax output line. This prevents video output when the lens turret is being operated. The turret handle may be fastened in the compressed position for the alignment procedure. Also shown in series with this output line is a 150 ohm resistor R23, and the oscilloscope detector is connected to the low side of this resistor. R23 is physically located just under the V7 socket.

Peaking circuits T8 and T7 may then be aligned as described in the preceding section 8.3, by feeding the sweep generator to the grid terminals of V5 and V4 respectively. The response of these stages from V4 to R23 should be essentially flat to 8 mc. The sweep generator gain should be adjusted to give approximately ½ volt peak-to-peak at the scope detector input, which prevents overloading of any stage with consequent false patterns.

A special corrective input circuit required for the rest of the alignment is shown in Fig. 8.9E. To avoid inductive and capacitive effects of one large resistor, three ½ watt resistors are used in series. This network is used to feed a 100 kc square wave to pin No. 1 of V2. With the gain control set at maximum and high-peaker (C20) at mid position, the 1000 ohm potentiometer of Fig. 8.9E is adjusted so that the square wave reproduced on the scope screen (still connected as above at R23) has a

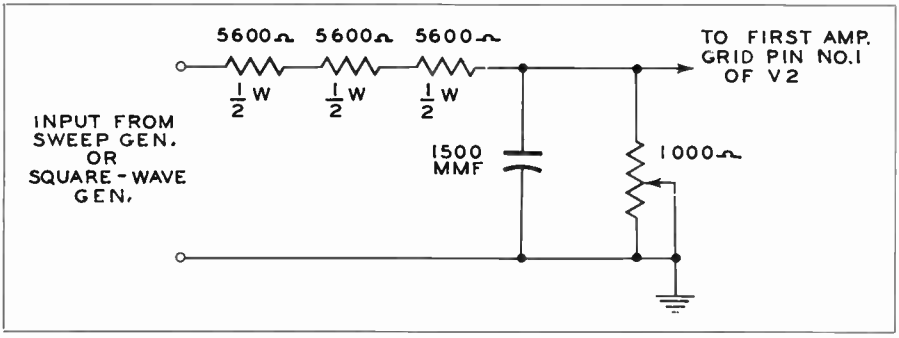

Figure 8.9E. Input circuit recommended by RCA for testing Image Orthicon pre-amplifier.

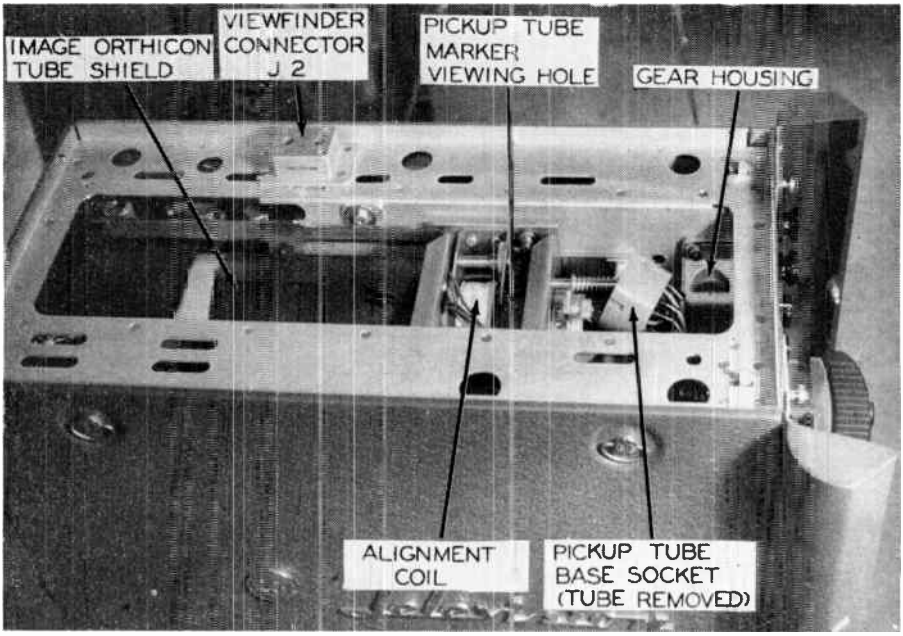

Figure 8.9F. Top View.

perfectly flat top exhibiting *no* tilt. This setting is then left fixed and the sweep generator fed to the input terminals of the network in place of the square-wave generator. Peaking circuits T5 and T6 may then be adjusted for optimum response. The overall amplifier response should be essentially flat to 7 megacycles.

When response of camera pre-amps begin to fall-off as may be apparent in gradual degradation of resolution in pictures, these alignment procedures should be carried out. The faulty stage may usually be quickly isolated by such procedure, and components in that stage checked by the conventional servicing techniques.

The maintenance engineer will find many occasions to remove and replace the image orthicon tube. It is true that only considerable practice will enable him to do this with utmost efficiency and safety, but some suggestions and warnings may be of help to the newcomer. As illustrated in Fig. 8.9F, it is not possible to view the shoulder socket with the tube shield and yoke assembly in place, since this socket is inside the shield and yoke. Therefore, with the turret and mask removed (section 6.2) the image orthicon must be inserted with the aid of the markers on the face of the tube and near the rear socket. The initial position for start of the tube insertion is white marker on face of tube pointing down, and marker near rear sockets facing upward. Since the tube may be inadvertantly turned ever so slightly during insertion, a pilot hole is provided in the bakelite tubing at the rear of the yoke (Fig. 8.9F) as an aid in locating the base marker which should be on top and visible through this hole. With one hand supporting the base and the other hand supporting the front, the tube must then be gently moved around until the shoulder pins slip into the shoulder socket. A sense of "feel" must be developed here and the newcomer must remember NOT to exert undue pressure since the shoulder pins of this highly expensive tube can easily be damaged beyond repair. After the tube is properly seated, the mask is put back in place, the rear socket put

onto the tube pins, and the turret replaced.

When the picture is "cocked" as mentioned under operation in Chapter 6, it is necessary to rotate the entire yoke and image orthicon assembly with respect to the focus coil. To do this the viewfinder must first be removed, by depressing the viewfinder release buttons (Fig. 8.9B) and lifting forward and up on the case. This leaves the top of the pickup head exposed as in Fig. 8.9F. Normally the viewfinder must be in place for proper operation of the camera, and some re-adjustment is necessary in the alignment procedure to obtain an image reproduction on the monitor sufficient to properly frame the picture. The yoke and tube assembly is turned by grasping the thumb nut at the rear of the pickup tube and turning in the necessary direction to straighten-up the picture.

It sometimes occurs in practice that it is not possible to obtain adequate sweep for the image orthicon with the recommended 75 ma of focusing coil current. With inadequate sweep amplitude (undersweeping) the picture on the monitor is larger than normal. In some instances this condition may be remedied by using a lower value of focusing coil current. This adjustment in the RCA system is in the regulated power supply (section 8.12).

Preventive maintenance on cameras is obviously a highly important schedule for any station. Equipment used in the field should be scheduled for a tighter schedule of inspection and testing than that used in the studio, since transportation of the units subject them to jarring, dust and moisture that studio units do not ordinarily undergo. Thorough cleaning and dusting minimizes current leakage and high-voltage arc-overs or corona effects. Any sharp points which tend to show corona tendencies should be flattened off as much as possible. All bushings, terminal boards and wiring should be inspected often, as well as resistors, capacitors, shielding, etc. Fuse caps and contacts in the holders must be kept clean.

In cases of actual trouble, it is wise to first check for proper operation and adjustment of the alignment controls. Then check for correct input signals and voltages. Well over one-half of improperly functioning cameras will be found to have a source of trouble included in the above, as well as simple tube trouble, which occupies almost all of the other half of trouble-causes.

DC potentials of the image orthicon tube should be checked at the rear and shoulder *sockets* WITH IMAGE ORTHICON TUBE REMOVED. Only a high-resistance VTVM should be used, and a record should be kept of "normal" voltages for each camera used in the station. The voltages to ground with the tube removed should be within ±10% of the "Typical Operation Characteristics" for that particular tube as listed in Section 2.2.

The maintenance engineer will find many chances for efficient carry-over from conventional testing routines in preliminary checking of the TV camera. For example, touching the grid of V2 in the above described camera with a screwdriver will normally show evidence of regeneration or stray pickup at the output of the amplifier. This is the conventional pre-amp check. Where the picture amplifier is dead, this simple method is used from the output stage back through the chain of stages until such effect disappears. Point-to-point analysis of that circuit may then be made. Where the trouble is quite apparently in the deflection circuits, waveforms should be checked with a scope both for shape and peak-to-peak voltage at points designated by the manufacturer.

The following discussion concerns the schematic of Fig. 8.9A listing most common fault-occurrences and a typical logical routine for isolating the cause. It should be noted that checking a TV camera involves the camera, camera control unit, power supply and a monitor such as the Master Monitor.

NO SIGNAL. This condition may be divided into two parts; the case where

no signal, noise or anything appears on the camera control unit but *does* appear in the camera viewfinder, or where no signal appears at either monitor position. In the former instance, the trouble would be in the camera control unit or monitor, with which we are not concerned at this time. (See next section for camera control.) When the signal does not appear in the camera viewfinder simultaneously with no picture at the control unit or master monitor, the trouble may be assumed to be in the pickup head. Since nothing shows on the screen, we know that not even the sweeps are functioning, since otherwise the raster, or a horizontal or vertical line would be on the screen. The first thought is to look at the tubes for indication of filament supply. If these are on, the next immediate step is to check for B plus supply. If the current drain from the power supply is well within normal limits as indicated on the output meter, it is likely that the power supply is functioning normally and that the camera tubes are receiving B plus. This should be checked, however, before going further, by checking this value at pin 14 of J1. Be sure that this camera cable is fastened securely at both camera and control unit. If power supply is ok, then switch S6, the turrett-handle micro-switch, may not be properly operating when turret handle is released. It should be noted, however, that if this is the trouble, the picture would appear on the viewfinder but not reach the camera control unit. This is so because the viewfinder receives the video at pin 4 of J2, from the junction of R22 and R23 *before* the S6 position. Also, since the sweep circuits are not functioning, the most likely trouble is in the power supply through the camera circuits. Point-to-point check of the B plus and vacuum tubes must then be made.

SWEEPS OPERATING BUT NO PICTURE. First check all operation of controls for inter-related effects. ADJUST TARGET and BEAM controls on control unit. Be sure GAIN control on camera is clockwise! Use the "finger" or screwdriver test at the grid of each video stage from V6 to V2 and watch for effect on raster, or pull each tube out of the socket momentarily and note effect. When stage is isolated, check voltages at that stage *after* ascertaining that the tube is good. Check V13 and V14. The voltage at R19 in the dynode divider network should be plus 1300 volts. Check all image orthicon potentials. With a VTVM, check voltage range on arm of BEAM control potentiometer, and ORTH FOCUS control, both in control unit.

HORIZONTAL SHADING INEFFECTIVE. First ascertain that all controls are adjusted for optimum results possible as outlined in Chapter 6. Be sure sufficient GAIN is used in the camera pre-amp. Of special importance are adjustments of MULTI FOCUS and BEAM current controls on the camera control unit. Observe the waveform on the master monitor CRO, since it may be that correct shading will be indicated there but not in the CRO waveform monitor of the control unit. Where this occurs, the resistors and components of the sweep output stage for the CRO in the control unit should be checked. If shading is definitely bad as indicated on all waveform monitors and visual observation of the picture, check the values of resistors R44, 45 and 46 associated with the horizontal shading circuit in V4. Also check the value of R68 at the input of H coils in the deflection yoke. Replace capacitor C21.

VERTICAL SHADING INEFFECTIVE. Check waveforms (field frequency) at all waveform monitors as above. If shading is definitely needed and adjustment of the V shading control has no effect or is not sufficiently corrective, check the resistors and capacitors associated with this control in the control unit.

PICTURE STRETCHED HORIZONTALLY. It is assumed that this occurs on all monitors as well as viewfinder, and that camera WIDTH control is ineffective over its normal operating

range. Since the picture is stretched horizontally, we know that the scanning amplitude in the H coils is insufficient, causing an *underscanning* of the target. Check continuity of the H deflection coils, T4 and all associated wiring. Use the oscilloscope to check the waveshapes, and peak-to-peak amplitudes of V11 and V12 and compare with manufacturers data.

PICTURE STRETCHED VERTICALLY. An indication of insufficient sawtooth current amplitude through the V deflection coils in the yoke. Check continuity of the V coils, T3 and all associated wiring. Use the oscilloscope to check waveshapes, and peak-to-peak amplitudes at V7, V8 and V9 and compare to manufacturers data.

NEGATIVE PICTURE OR POOR CONTRAST. The engineer would first check for proper operational function of beam current to target potential ratio. This condition may be caused by a target voltage too far positive, or by insufficient beam current. The next most likely cause is anything that would reduce video gain in the pre-amp stages V2 to V6. A check should be made for correct filament voltage at each tube, after ascertaining that all tubes are good by substituting new tubes of known condition. Check for poor soldered connections in filament wiring. If this has not cleared the trouble, a new image-orthicon tube known to be good by checking in a normal camera should be substituted. As a last resort, coupling capacitors C16, C19, C24 and C27 should be replaced one at a time with an exact type replacement.

ABSENCE OF HORIZONTAL SWEEP. When H deflection is absent or intermittent, only a vertical line will appear on the viewfinder and monitor screens. Tubes V15, V12 and V11 would first be replaced one at a time with a tube known to be good. The next logical step is to check for receipt of horizontal driving pulses at pin 22 of J1 and at pin 4 of V15. Continuity of action is then checked with the oscilloscope from the output of V15 to the input of the horizontal coils in the deflection yoke. If action is intermittent, check for rosin or cold-soldered connections, faulty components or tube sockets. Check for proper resistive value of H coils.

ABSENCE OF VERTICAL SWEEP. Same procedure as above, involving the circuits of V7 to V10, and pin 23 of J1.

APPEARANCE OF BARS IN PICTURE. If bars appear on the raster running horizontally (on all monitors), the B plus supply should be checked for excessive AC ripple as might be caused by defective filtering. Check position, spacing and tightness of image-orthicon shielding in pickup head. Anything that would cause the vertical blanking waveform to appear on the target during normal scanning time would cause horizonal bars to appear. Check action of V centering resistor R67. Especially check the waveform and circuit components of the blanking amplifier and vertical feedback amplifier V10. Check for proper amplitude of the horizontal and vertical driving pulses at the blanking mixer stage V16. If the bars run vertically, horizontal blanking pulses might be appearing on the target at the wrong time. Check the stability of the horizontal centering resistor R64. Check action of the blanking circuits as above. Replace the H sweep tubes V11, V12 and V15. Check for proper amplitude of applied pulse at pin 4 of V15. If the vertical bars are only on the left side of the raster, the cause may be excessive oscillations in the damper action which resistors R52, R114 and R115 are intended to suppress. Check the value of these resistors, which are located at terminal 3 on T4. Check for proper current waveform (oscilloscope) through the horizontal coils of the deflection yoke by opening temporarily at the coax connection on terminal 4 of T4, and inserting a 10 to 20 ohm resistor across which the scope is connected. Improper current waveform if a proper voltage waveform is applied will indicate a defective coil which must be replaced. Check action

of horizontal linearity resistor controls R74 and R81.

By this time the logic of trouble-shooting a television camera may be realized as nothing particularly complex or complicated so long as all circuit functions are properly orientated in the technicians mind. As a general rule the monitor screen serves as an excellent initial analyzing instrument for quickly isolating the general nature of malfunctioning and approximate location. A properly aligned master monitor should always be used in testing the camera so that the camera control unit monitor and viewfinder monitor may be correctly interpreted. Any particular control which does not properly function may then be quickly spotted. For example, if the IMAGE FOCUS control should prove to be ineffective, that potentiometer and its associated circuits in the control unit should be checked for component values. We also know that the IMAGE ACCELERATOR control on the camera affects this action of image focus, and associated circuits of this control would be checked for ineffective image focusing action.

Similarly, if either centering control were ineffective, the components associated with that particular circuit would be checked for proper value after ascertaining that the proper current from the regulated power supply was available. In the case of an ineffective alignment control, we have the ALIGN REVERSE switch, the angular adjustment of the alignment coil, and alignment current resistor R63 to be checked. An ineffective horizontal linearity control calls for checking all H sweep tubes V11, V12 and V15, and their circuit components. An ineffective vertical linearity control tells us to check V7 and V8, and/or all circuit components associated with the vertical sweep circuits.

The high-peaker control should be checked often. It will be noted that rotation in one direction will cause a black trailing smear, indicating low-frequency phase distortion. In rotation through the opposite extreme, white overshoots occur indicating too much high-frequency compensation. At the optimum point in between, neither smear nor overshoot should appear. If it does, the peaking circuits must be aligned.

8.10 The Camera Control Unit

Testing and maintenance of the camera control unit is so closely related to the pickup head itself that most of such routine was included in the previous section. Of course the control unit contains a more elaborate video amplifier than is the case with the pickup tube pre-amp in the camera, since blanking insertion, sync insertion (if only one camera is used), and clamping circuits are involved. The fundamentals of aligning and checking such circuits were outlined in section 8.3. The video amplifiers contain peaking circuits, and when aligning these transformers for optimum response it is remembered that any circuit involving clamping or blanking signal injection must be especially treated as discussed in that section. In addition, the control unit usually incorporates a high-frequency corrective circuit for varying length of cables which may be necessary for a particular camera. This circuit is varied by means of a switch which compensates for greater amounts of high-frequency attenuation the longer the interconnecting cable. In the RCA camera control, this is a three-position switch marked 100, 500 and 1000 feet, and the tap nearest to the length used is selected. The associated electrical network is in the cathode circuits of the second and third video amplifiers in the control unit.

Fig. 8.10A (1) and (2) illustrate the RCA field-type camera control unit with which the maintenance department at the studio is concerned, since all maintenance of portable equipment is carried out at that point. Such field-type equipment is also often used in studio set ups. Studio and field type equipment employ the same basic circuits and are interchangeable in most commercial systems. In (1) is illus-

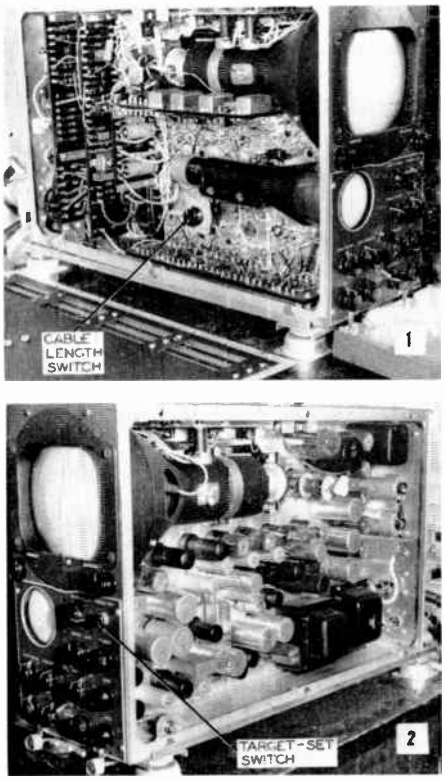

Figure 8.10A.

trated the physical location of the cable length compensation switch, as well as all components in the left side of the unit. In (2) is the view of the vacuum-tube side of the unit, and also shows the location of the "Target-Set" switch which has been added to later production models. This switch facilitates the adjustment for correct target potential since action is automatic as follows:

With the momentary contact target-set switch held "in," and TARGET control adjusted so that the picture just disappears from the monitor, approximately 2 volts potential is automatically applied to the target mesh upon release of the switch. Since the optimum range of target voltage is 1.9 to 2.2 volts *above cut-off*, this circuit permits quick adjustment for any given scene. Thus when the scene changes to a differert contrast or brightness level, or the lens iris adjustment must be made, a very rapid adjustment of optimum target voltage for that particular scene is possible. Remember that the target cut-off potential is related to the brightness of the scene.

Fig. 8.10B illustrates the simplified schematic of the target-set switch along with the orthicon focus and multiplier focus controls. The continuation of these circuits may be traced out from their respective pin termination on J1 in Fig. 8.9A. As shown, a negative voltage is fed through the target control to balance the positive voltage which allows a variation of approximately —5 to +5 volts on the target mesh by adjustment of the TARGET control. Remember in this connection that actual DC voltage to ground of the target is not the final criterion of target cut-off point, but rather the amount of light reaching it from the lens system. The values of resistors in this circuit are such that with the target-set switch depressed (closed), and the TARGET control rotated to just cut off the picture, when the target-set switch is released (opened), the target is automatically restored to about 2 volts above cut-off for that particular scene.

The camera control unit not only amplifies the video output from the camera pre-amp, but also receives the horizon-

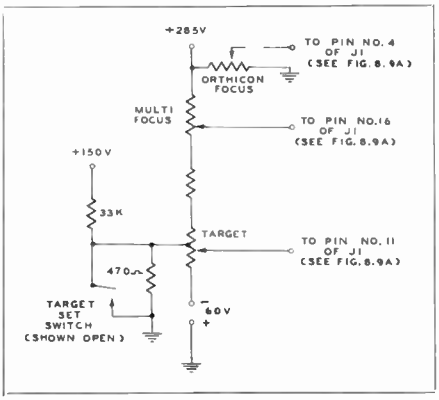

Figure 8.10B. Simplified schematic of target-set switch, multi-focus and orth focus controls in RCA camera control unit.

tal and vertical driving pulses from the sync generator, amplifies them in two stages of amplification each, and feeds them to the camera pickup head. The signal continuity, waveform and peak-to-peak amplitude are checked with an oscilloscope as described previously for such amplifiers. As in all equipment, cleanliness is of prime importance and routine cleaning of all components should be carried out.

8.11 Switching and Mixing Units

The only difference between maintenance of the switcher system and other units is in type of control switches. This system involves a large number of push-button assemblies, in most cases interlocked, and, in the case of remotely-controlled relay systems, a large number of video relays. Also usually included in this system are the intercommunication sound circuits to the cameras and production staff, as well as to the relay transmitter on field units.

The fundamentals of switch maintenance were covered in section 8.2. Actually the most common source of trouble in switching systems is minute amounts of dirt or foreign matter on the contacting surfaces. In the case of field equipment, mountings and connections must be tightened *and cleaned* often. See that all moving parts of the switch assembly move freely without a tendency to bind and with sufficient tension. A flashlight and dental mirror are handy tools to have in inspecting and servicing certain types of switches.

Relays should be inspected often for correct spacing and proper line-up of contacts. See that connections are tight and that wiring is not becoming frayed. Cultivate the habit of feeling the coils for signs of excessive heating, as may be indicated by charred insulation wrappings around coil. Routine cleaning of contacts may be done by simply pulling a narrow strip of canvas or linen cloth through the contacts with the points held closed a sufficient amount to gain good contact. At longer intervals, crocus cloth should be dipped in carbon tet fluid for this process, followed by a dry linen cloth.

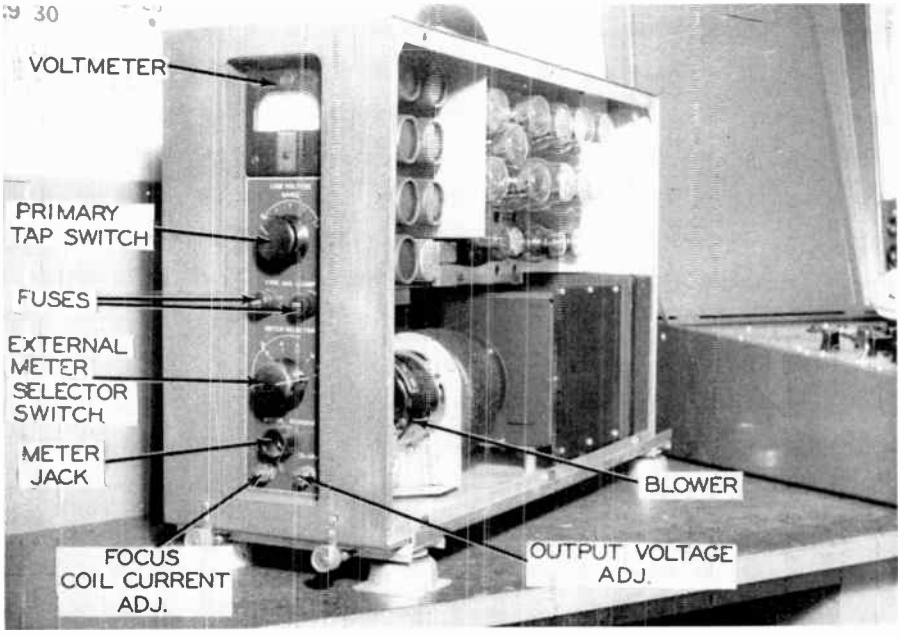

Figure 8.12A. RCA Regulated power supply.

8.12 *Regulated Power Supplies*

The low-voltage regulated power supply provides a source of regulated DC for the camera and camera control unit. Another such power supply is usually used to provide this voltage to the mixer switcher unit and master monitor. The sync generator usually employs its own regulated supply.

Fig. 8.12A illustrates one type of RCA power supply. This particular unit provides 950 mills of DC at any voltage between 270 and 285 volts. The output voltage is maintained constant over a load change of 500 mills and through input voltage variations of ±4 volts. In addition, it contains the centering-current supply, and a regulated current output of 60 to 80 ma for a magnetic focusing coil in the pickup head.

Shown on the control panel is a primary tap switch and voltmeter which permits use on a line voltage from 98 to 129 volts. The focus coil current adjustment and output voltage adjustment is also shown. The external meter jack permits checking the loading of the parallel regulating tubes, as well as total current, focusing current and output voltage.

It is recommended that the maintenance department keep records of plate current readings of the regulator tubes, so that any tube which deviates more than 30% above or below average may be replaced. When the plate current of any tube falls to 70% of its initial value, a new tube should be installed. Either defective tubes or an excessive load will cause poor regulation in the supply.

The blower supplies proper ventilation to the cabinet and draws outside air through a filter which should be cleaned monthly. The positive side of the rectifier circuit is connected to the filter network through the contacts of a thermal-delay relay, which prevents loading on the rectifier tubes for about ½ minute, allowing filaments to reach normal operating temperatures.

8.13 *Maintaining the Sound*

Maintenance of sound equipment in the television station does not differ from conventional methods of well planned inspection and audio testing.

Microphones, cables, stands and booms should be given daily or weekly inspection. Microphones and their cables should be given an especially close inspection after every rugged field trip. The best way to check mikes and their cables is to connect each one in turn to an amplifier of known characteristics and listening on headphones (to prevent acoustic feedback from a loudspeaker) while the cord is "jiggled" all the way up and down the entire length. Pay particular heed to each end of the cable where connector plugs are attached. Examine all pins and plug shells for looseness or cracks. After checking, clean all cabling with a slightly damp or oiled rag and wipe clean with dry cloth. Should any "frying" noise be detected when jiggling the cable, or winding and unwinding

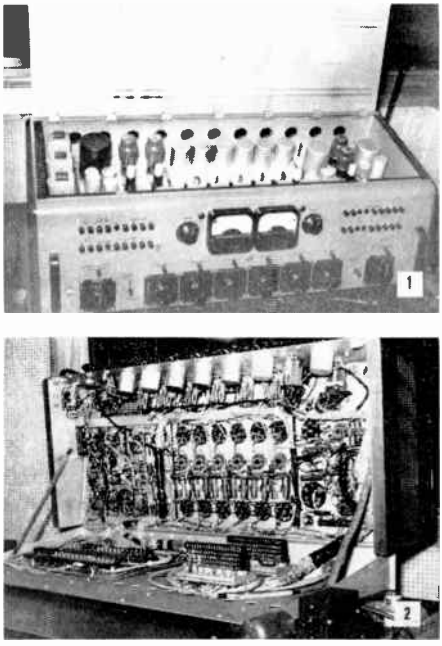

Figure 8.13A. (1) Top raised. (2) Console raised in servicing position.

short portions of the cable in the hands, check the connections of the cable at the connector terminations first. If the noise is a result of frayed wiring under the insulation through the length of the cable, it is better to install a completely new one than attempt repair of the defective cable. Severe hum and noise is usually an indication of an open shielding along the cable, and the entire cable should be replaced.

A "dead" broadcast mike is usually the result of an open connection either at the connector terminations or on the transformer within the mike assembly. Examine the ribbons in velocity microphones for signs of sagging, stretching, or mis-alignment between the pole-pieces.

Mike stands and booms should be examined for smooth operation of lock-nuts, thumb screws or any of the various friction arrangements used. All moving parts in the mechanisms of the television mike boom should be lubricated at points designated by the particular manufacturer. The dolly wheels and adjustment mechanisms must be maintained for ease and quietness of operation.

Audio jacks on patch-panels that are used often are sufficiently self-cleaning, and very little maintenance is necessary. Where used only for emergency re-routing of signal paths, however, periodic insertions and removals of the patch cords should be practiced so that contacts are kept clean. It is well to check continuity of such circuits with a tone at periodic intervals. Patch cord plugs should also be cleaned and polished on a regular schedule.

Fig. 8.13A illustrates two views of a typical sound-mixer control console as used in broadcast and TV stations, showing accessibility of tubes and servicing position important to efficient maintenance and quick location of trouble in emergencies. The components requiring the most maintenance are the attenuators and switches. Attenuators (mixers) usually will begin to get noisy from 8 to 10 weeks after cleaning. The shield around each fader is easily removed by two thumb screws, exposing the contacts. These should be wiped clean with carbon tet on a clean lint-free cloth, and lubricated with a good grade of electric contact oil or other special lubricant made for this purpose. This is to prevent excessive wear which otherwise occurs. Noise originating in faders may result from any of the following causes: dirty contacts, improper tension on the rotating arm leaves, wear of contact faces, failure of the moving contacts to properly connect with the stationary contact faces causing a "break" before "make," or failure of the reverse end of the removable arm to properly connect with the contact bar.

Attenuators which have not been properly lubricated over long periods of usage will show signs of uneven wear on the contact faces. Excessive tension of the moving leaves will also cause wear. The tension is very delicately adjusted and the moving arm should never be removed except when absolutely necessary. Contacts which show wear and cause noise may sometimes be corrected by crocus cloth followed by a thorough cleaning with carbon tetrachloride. Usually, however, it is advisable to install a new fader.

CHAPTER

9

Field Equipment and Set Up Procedures

9.1 Television Relaying Problems

The wide variation of conditions which must be met by the field department of the TV station presents a continual challenge to engineers in providing proper power, interconnection of equipment, orientation for smooth production coordination, and microwave relay pecularities. This very challenge provides the incentive for many engineers to select the field department as the most interesting of all. Certainly it may be said that the field engineer faces little chance of finding himself in a daily routine which never changes.

Fig. 9.1A illustrates the basic principle of a studio-to-transmitter link, in which the locations become permanent for a given set of conditions. The natural earth curvature at sea level is shown. In the path of the relay propagation signal, the map elevation (height above sea level) and height of obstacles such as buildings, etc., must be added to determine the necessary height of the respective relay antennas. This propagation path should be a minimum of 100 feet above the highest obstacle as determined by the above method.

Let's assume for the moment that the distance from the studio building to the transmitter site is 20 miles. It is determined by survey that the tallest obstacle in the desired propagation path is 5 miles distant, where the map elevation is 1000 feet with a 300 ft. building. The studio building is on a site 800 foot map elevation (above sea level), and the studio building is 600 feet high. Thus the total height at the top of the studio building is 1400 feet, and the calculated height of the tallest obstacle in the propagation path is 1300 feet. If we considered only a flat surface, we would determine that the relay transmitter dish could be mounted directly on top of the studio building which would be 100 feet over this obstacle. Remember, however (section 5.2), that correction must be made for earth curvature, as it is noted from Fig. 9.1A that a point 5 miles distant will be effectively higher by this amount of curvature. The correction is stated (review section 5.2):

$$e = \left(\frac{D}{1.23}\right)^2 - \left(\frac{D-d}{1.23}\right)^2$$

where e is the correction in feet, D is ½ the distance between the respective antennas, and d is the distance in miles to the point on the path to be corrected. In the above example for 20 miles between terminals:

$$e = \left(\frac{10}{1.23}\right)^2 - \left(\frac{5}{1.23}\right)^2 =$$

$$65.6 - 16 = 49.6 \text{ or approx. } 50 \text{ feet.}$$

Thus 50 feet should be added to the 1300 feet for the obstacle, and our propagation path is actually only 50 feet higher than the calculated tallest object. In practice, it would be desirable to mount the relay transmitter dish on top of a 50 foot tower atop the studio building, providing the receiver location was not sufficiently high to place the line-of-sight path at least 100 feet over the highest obstacle.

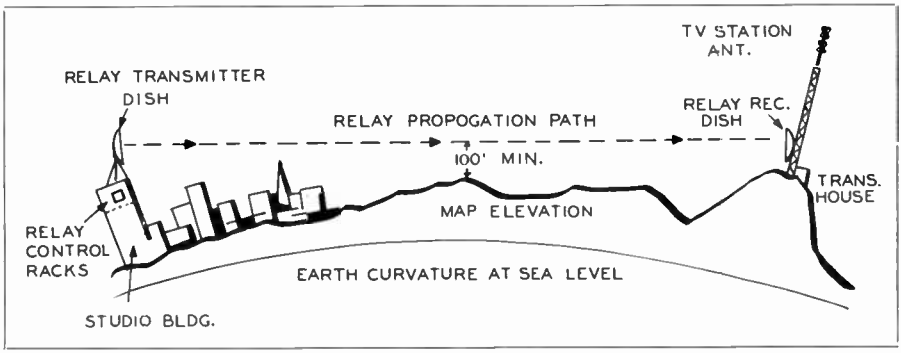

Figure 9.1A. Basic principle of STL.

Working out this correction formula for various distances between terminals, it may be found that the maximum amount of correction (occurring at the half-way point) for a 20 mile separation, would be approximately 65 feet; for 30 miles approximately 150 feet, for 40 miles approximately 260 feet, etc.

To effectively visualize the usefulness of this relationship, the formula may be turned around to give the necessary correction in feet of the effective height of the terminal points. That is:

$$e = \left(\frac{D - d}{1.23}\right)^2 - \left(\frac{D}{1.23}\right)^2$$

and it is noted that the answer will always be negative. This correction in feet is then simply subtracted from the actual height of the terminal antenna to obtain the *effective* height under the associated conditions.

The same basic procedure is followed in determining necessary steps to take for relay of field events such as may originate from stadiums, boat races, etc. In some cases it is most convenient to employ the microwave relay receiver mounted at the transmitter tower and handled from that point as a terminal. In other cases, especially where the studio is centrally located in a high building, the relay receiver is tower mounted at that point. Obviously the two facilities could be combined and the most efficient point of reception employed. Many field events are regularly scheduled affairs, and after initial and satisfactory setup has been made, become routine in operation, insofar as the relay system is concerned.

Whichever method is used, it is most helpful to obtain a good city map drawn to scale, and locate the tallest buildings or obstacles with a black crayon. Mark the map elevation at that point, or better yet the total of map elevation and height of structure. This sometimes takes considerable research time and is a good assignment for any new station contemplating field telecasts. With this type of accurate information available, considerable waste of time may be avoided later in attempting a relay point obviously impossible by the usual method of line-of-sight propagation. An example is roughly outlined in Fig. 9.1B. In this case a football stadium and baseball field, likely prospects for telecasts, are located near the edge of the city in the directions shown. The highest point obtainable at the football stadium is found to be 150 feet above ground, and the highest point at the baseball field is 100 feet. These are added to the map elevation for these points, obtainable from local Geodetic Survey offices. The 600 foot studio building is located at a map elevation of 1000 feet, with the receiver antenna mounted atop a 50 foot tower giving an overall height of 1650 feet. The feasibility of line-of-sight microwave relay now depends upon distance to the terminal points, and effective height of the structures in the line-of-sight path.

Where the line-of-sight path may be calculated only a few feet higher than obstacles, a test-transmission is the only way to be certain of results. The 100 foot minimum is recommended to compensate any slight errors in calculation, and to avoid the well-known vagaries of microwave transmission. Obstacles close to the path cause trouble from reflections and phasing of the microwave beam, as well as loss of signal strength. These conditions are not always the same; atmospheric "ducts" influence the propagation path to some extent by differing amounts from time to time, and the farther "in the clear" the microwave beam, the less is the likely degradation of signal.

It should be borne in mind that, as a general rule, the orientation of the receiver dish is limited to two basic adjustments: (1) horizontal direction, and (2) tilt. The dish is mounted as high on the tower as is feasible for that particular installation, and height is therefore usually a fixed value.

Let's take the information from the map of Fig. 9.1B on a direct line from the studio receiver location to the football stadium, and see how a field engineer would assemble his initial estimate of possible relay setup. It has been determined that the highest obstacles along this path are the power and light building and a water tower. For illustrative purposes, we will assume that the power and light building is 3 miles from the studio, at a map elevation of 1000 feet (same as studio building), with a height above ground of 400 feet, totaling 1400 feet elevation. We will also assume that the water tower is 3 miles this side of the stadium, at a map elevation of 700 feet, with a height above ground of 100 feet, totaling 800 feet. We may tabulate our data as follows:

Total height of receiver dish = 1650 feet.

Total height of P&L bldg. = 1400 feet. 3 miles from receiver.

Total height of water tower = 800 feet. 3 miles from transm.

Total height of transm. dish = 950 feet.

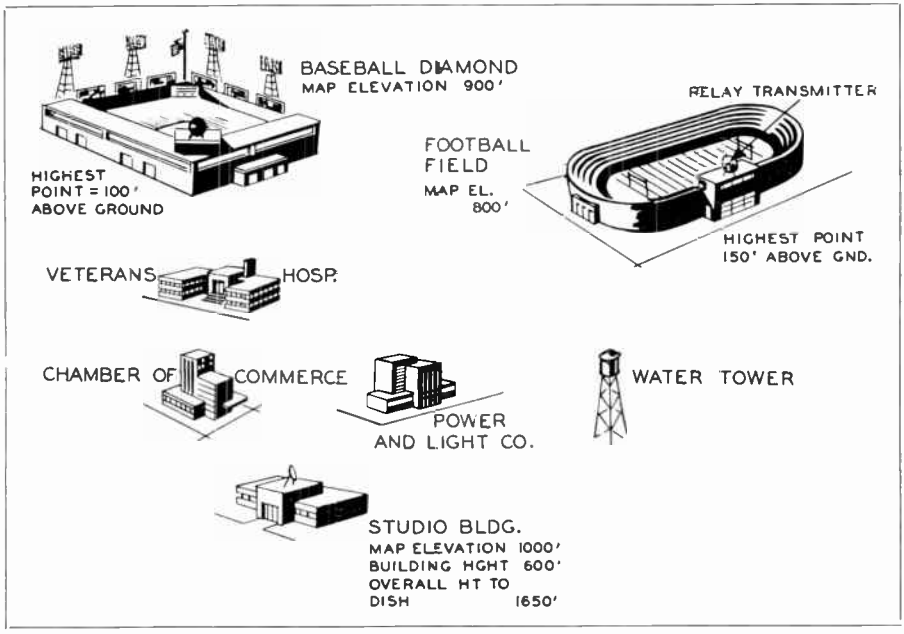

Figure 9.1B.

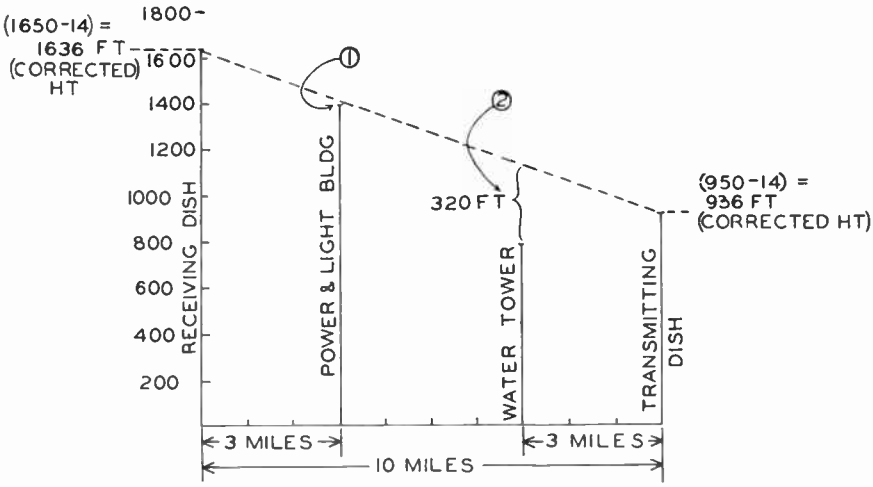

Figure 9.1C. For 10 mile separation of terminal points.

Total distance from transmitter to receiver = 10 miles.

To visualize the effect along the propagation path, a linear graph may be drawn up from the above data as in Fig. 9.1C. Since the highest point on the receiver side of the earth curvature is at a distance of three miles, it is necessary to correct the actual height of the receiver dish for that distance. Since the total distance is 10 miles:

$$e = \left(\frac{5-3}{1.23}\right)^2 - \left(\frac{5}{1.23}\right)^2 =$$

$$(1.62)^2 - (4)^2 = (2.62 - 16) =$$

$$-13.38 \text{ or approx. } -14 \text{ feet.}$$

Thus the actual height of 1650 feet should be reduced by 1650 — 14 equals 1636 feet effective height. This is drawn to scale on linear graph paper as in Fig. 9.1C, along with the actual total height of the power and light building at 3 miles distant. Since the water tower is also three miles from the transmitter dish on that side of the earth curvature, the same corrective factor is applied to the actual height, and the corrected height drawn to scale. The two terminal points may then be connected as by the dotted line as shown, and the height of the propagation path above the tallest obstacles

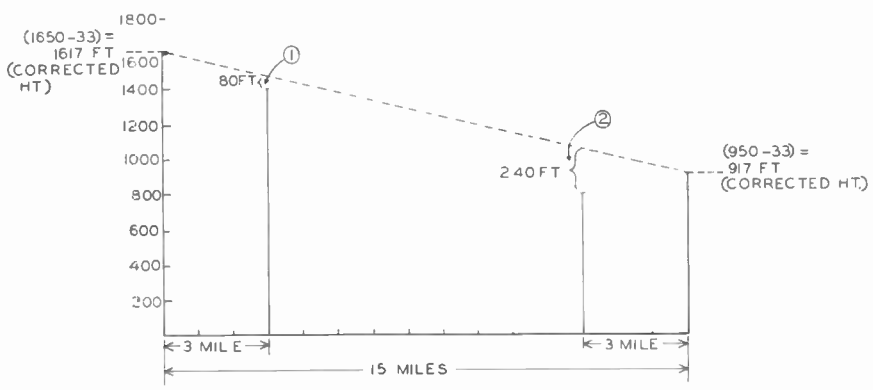

Figure 9.1D. For 15 miles separation of terminals.

is indicated. It is noted in this instance that the power and light building, although its actual total height is some 230 feet lower than the receiver dish, is very near to the path of propagation (point 1). Since the formula used as well as the estimated heights are only approximate, an actual trial would be necessary to determine the effectiveness of relay operation in this instance. It should be observed that if the transmitter location were actually closer along this same path, the "shadow" of the power and light building would prevent use of the microwave relay. Other methods as described later would be necessary. It is also observed from this graph that the water tower (point 2) is approximately 300 feet below the path of propagation and its effect would be negligible.

Fig. 9.1D illustrates the same conditions if the separation of the terminals was 15 miles instead of 10 miles. The tallest obstacles are still assumed to be 3 miles from the respective terminal points. In this particular case, although the correction is greater due to the greater distance (approximately 33 feet), about 80 foot clearance is obtained at point 1, while the clearance at point 2 has been decreased to 240 feet. (Still negligible in effect.) It should be observed that if the height of point 1 were moved farther along the distance axis, the relay would definitely not be practical at microwave frequencies, between these two direct points.

When a remote point is not in a possible direct line-of-sight propagation path, it is not to be inferred that a microwave relay of a program from that point of origin is impossible. Due to the inherent nature of the microwave beam, it may easily be bent around corners if the proper relative factors are considered. The first consideration is in determining a common point which *is* in a position to afford line-of-sight characteristics to both the receiving and transmitting points. In the unusual circumstance when no such single and common point exists, several points may be judiciously chosen to provide a "zig-zag" path between terminals. Fig. 9.1E illustrates the fundamental principle involved in this procedure. The reflecting surface should be flat for maximum efficiency in reflection characteristics, and orientated so that the angle of beam reflection is proper for receiver dish location. Such reflecting surfaces may actually be a sufficiently tall steel-constructed building or other structure that may be properly orientated for the purpose. When such is not available, a solidly supported copper screen of 6 to 8 feet square may be used, and some stations construct several of these reflectors for just such contingencies. When aligning relays of this type, it is necessary to install a PL (private line) at the reflector point as well as the other terminals so that maximum orientation of all elements in the system may be attained.

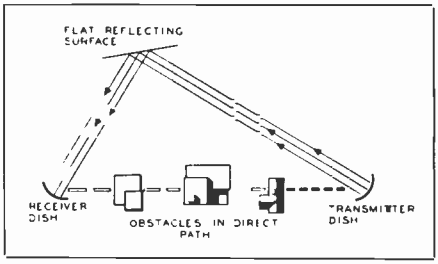

Figure 9.1E.

The advisability of using some conveniently located curved surface as a relay-beam reflector will depend upon several factors. Fig. 9.1F illustrates the characteristics of the reflected beam from a curved surface. It was observed from the previous illustration that the reflected power density from a flat surface is the same as the incident power density, since angles of reflection and incidence are equal. When the surface is curved, however, the reflected beam diverges an amount depending upon the angle of incidence. In (1) of Fig. 9.1F, the effect of a large angle of incidence is shown. Thus the power density is less in the reflected beam than that received from the original beam. This factor not only decreased the received field strength, but enlarges the

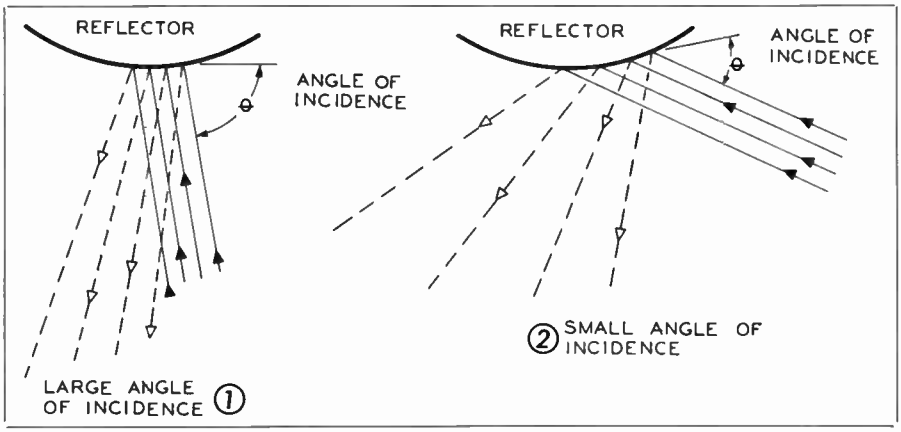

Figure 9.1F. (1) When reflection is caused by a curved surface, the reflected power density of the radio beam is less than that contained in the incident beam by an amount dependent upon angle of incidence. (2) Illustrating the great divergence of beam caused by reflection from a curved surface at a small angle of incidence.

possibility of troublesome reflections from other objects which may cause "ghosts" and other phasing effects. As the angle of incidence decreases toward the "grazing" angle as in (2), the cross section of the transmitted beam impinges on a greater curved area of the reflecting surface and the divergence increases, decreasing the power density still further. If such a reflecting surface is very close to the receiving dish, its use may be entirely practical since sufficient power may be available and reflections are minimized. If such a surface were closer to the transmitter dish than the receiver dish its use would be entirely impractical. The factors which determine the practicability of this type of reflecting surface may be seen to include amount of curvature (size or circumference of object), angle of incidence, and distance from receiving dish.

9.2 *Microwave Equipment and Setup Procedures*

An illustration and functional block diagram of the RCA Microwave Transmitter is illustrated in Fig. 9.2A. The radiator is a 4 foot diameter metal parabola, fed to its focal point by the hook-shaped waveguide, designed for operation in the 6800 to 7050 megacycle band. The power output of the transmitter is about 100 milliwatts, while the parabolic reflector provides a power gain of 5000 resulting in an ERP of 500 watts. The half-power beamwidth is around 3 degrees (section 5.2).

In the microwave region of 7000 mc., separation of the transmitter and antenna is not attempted, and the transmitter is an integral part of the parabola as shown in (1). The transmitter chassis is mounted in the cylindrical base at the rear of the parabola itself, and contains the oscillator and modulator circuits, a monitor and a wavemeter. A jack for an interphone is in-

Figure 9.2A. (1) Television Microwave relay transmitter. Courtesy RCA.

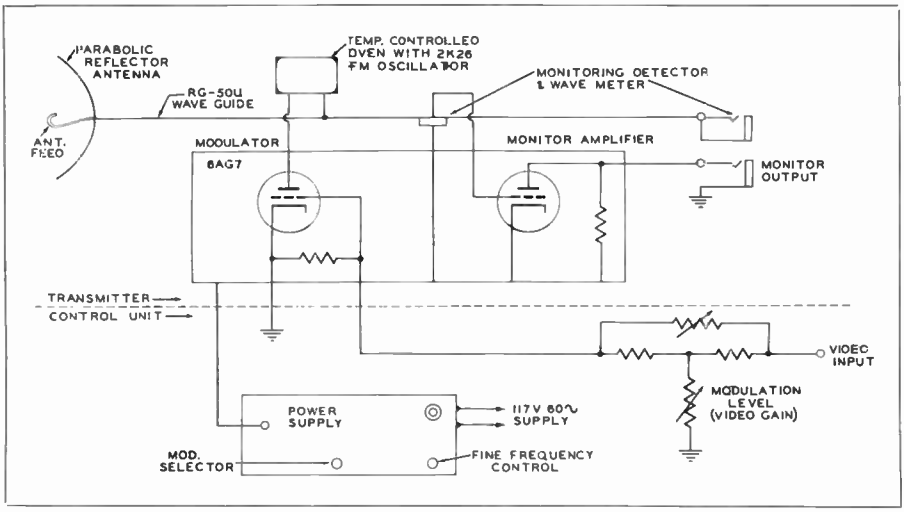

Figure 9.2A. (2) Functional Block Diagram of RCA TV microwave relay transmitter.

cluded to provide communication with the control point during setup During the test adjustments, a jack is provided for monitoring, and another for metering. The oscillator which comprises the entire r-f portion of the FM video transmitter is a type 2K26 Klystron, mounted in a shielded compartment on the chassis in such a position that the base extends directly into the waveguide which bounces the rf energy into the focal point of the parabola. This oscillator compartment is temperature controlled for utmost frequency stability.

The Klystron oscillator (detailed later) is frequency modulated by varying the *reflector* electrode voltage at video frequency. Maximum deviation for this transmitter is 10 megacycles with an average deviation of around 8 mc. with a polarity such that video signal in the white direction causes an increase in transmitter frequency. The 6AG7 modulator tube receives its input voltage from one of the three coaxial lines in the connecting cable. An input signal of 0.65 volts peak-to-peak from the transmitter control unit is sufficient for normal modulation of the transmitter. The frequency characteristic of the overall system is flat from 60 cycles to 6 mc., and the phase shift at low frequencies is low enough so that a 60 cycle square wave at the input will appear at the output with less than 5% tilt.

A wavemeter coupled into the waveguide provides a reference for transmitter operating frequency calibration. A crystal detector is also coupled into the waveguide. The DC output of the crystal, which is a measure of the transmitter output, may be observed either at the transmitter (by jacks provided) or at the transmitter control unit location. The AC output of the crystal is in terms of the AM output incidental to the normal FM and as such does not provide a picture signal. It may, however, be used to measure degree of modulation, and is amplified by a buffer amplifier and sent over one of the coaxial lines in the interconnecting cable to the transmitter control. Switches in the transmitter control can switch the output from the normal video voltage to the modulator to either of two 60 cycle test voltages (of fixed amplitudes) which are used to check deviation and output of the transmitter.

The power supply and operating controls are located in the suitcase-type transmitter control unit which may be

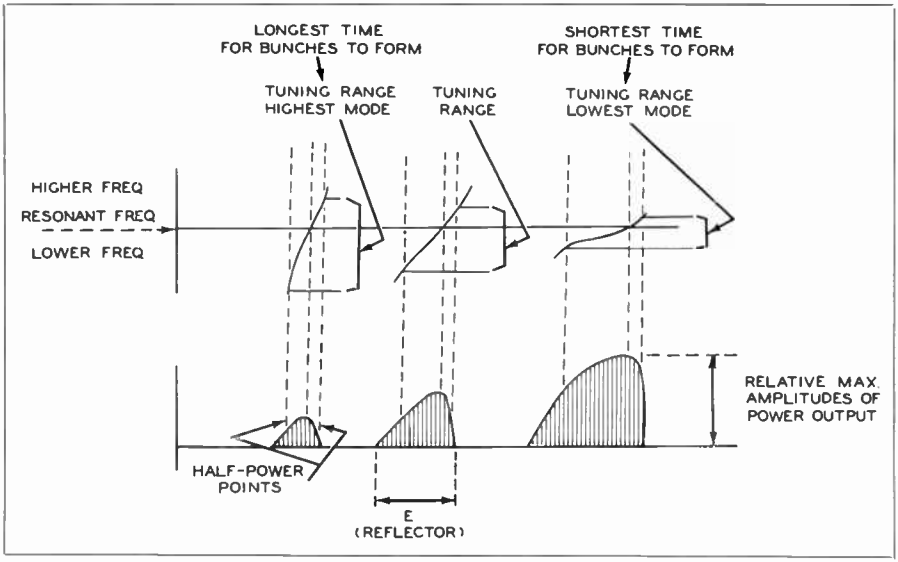

Figure 9.2B.

located up to 400 feet from the transmitter. It is recommended in practice that this distance be kept under 250 feet if possible. The regulated power supply provides 300 volts for the oscillator and modulator tubes, and a regulated negative supply for the oscillator reflector voltage. This is adjustable from —250 to —100 volts with a normal output of 5 ma. Total supply required from the 117 volt AC line is 150 watts. A substantially constant output voltage is maintained for an input variation of 100 to 130 volts.

The 2K26 Reflex Type Klystron is used both as the transmitter carrier wave generator and in the receiver as the local oscillator in conjunction with a crystal converter. This tube is illustrated and basically described in section 5.2, Chapter 5. (See illustration, Fig. 5.2F.)

An important operating characteristic of the reflex klystron are regions known as *voltage modes*. These regions are designated by a total range of reflector voltage (see section 5.2) over which oscillations will occur. Oscillations do not occur in the regions between modes. Fig. 9.2B illustrates the fundamentals of voltage modes of operation and relative tuning ranges and power outputs for these modes. The electronic tuning bandwidth for each mode is in megacycles between two half-power points, for a given resonator voltage and variable reflector voltage. It is observed that the maximum power output in each mode occurs at the resonant frequency of the cavity. In the "highest modes" of operation the electrons are bunched more slowly than lower voltage modes, resulting in smaller maximum power limits due to overbunching. These high modes, however, give the maximum electronic tuning range as indicated by the graph of Fig. 9.2B. This is because the electrons crowd and uncrowd more slowly. The lowest modes of operation provide maximum limit of power output, but a decreased electronic tuning range due to the rapidity of bunching and unbunching which imparts the energy to the output.

Where electrical tuning is desired as in television relay transmission, a compromise is made between maximum power output obtainable and maximum possible tuning range for the half-

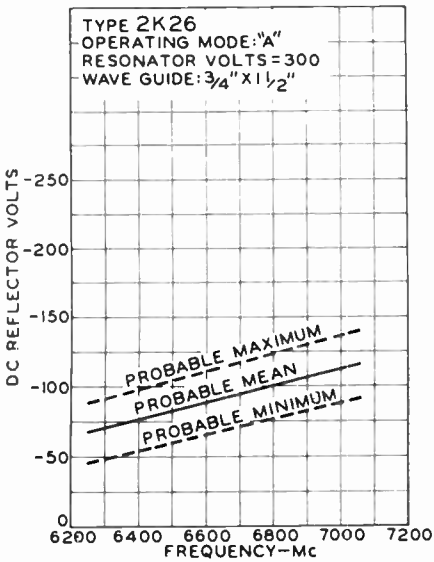

Figure 9.2C. From RCA tube data sheet. Courtesy RCA Tube Div.

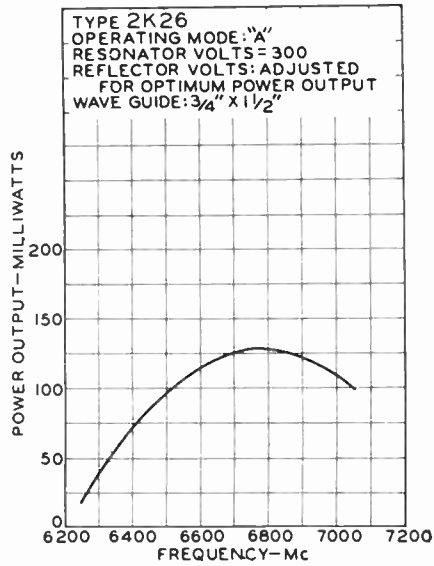

Figure 9.2D. From RCA tube data sheet. Courtesy RCA Tube Div.

power limits. Only one mode of operation is designated for the type 2K26, known as the "A" mode, which is the best compromise between optimum power output and a wide electronic tuning range. Fig. 9.2C illustrates this mode of operation. The two dashed lines show the probable range of reflector voltages required to produce the optimum power output. The middle solid line shows the variation of reflector voltage with frequency for a typical tube.

The power output characteristic of the 2K26 oscillating in the designated mode "A" is shown in Fig. 9.2D. The curve indicates the power output in terms of operation with a fixed load having the characteristic impedance of the ¾ by 1½ inch wave-guide presented to the coupling unit. The electronic tuning characteristics are given in Fig. 9.2E.

Ambient temperature changes will cause a resonator to expand or contract with consequent change in frequency. It is essential that the 2K26 be operated at an ambient temperature that is nearly constant. Hence the tube is usually placed within a temperature-controlled oven as in the RCA relay unit described. When the tube is first put into service, it should be mechanically tuned to the desired frequency. The tuner bow should then be flexed a num-

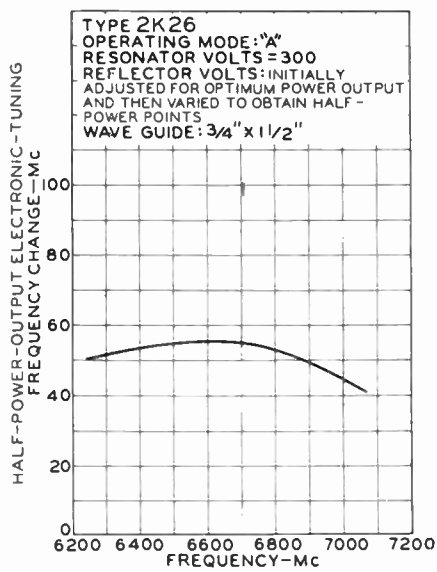

Figure 9.2E. From RCA tube data sheet. Courtesy RCA Tube Div.

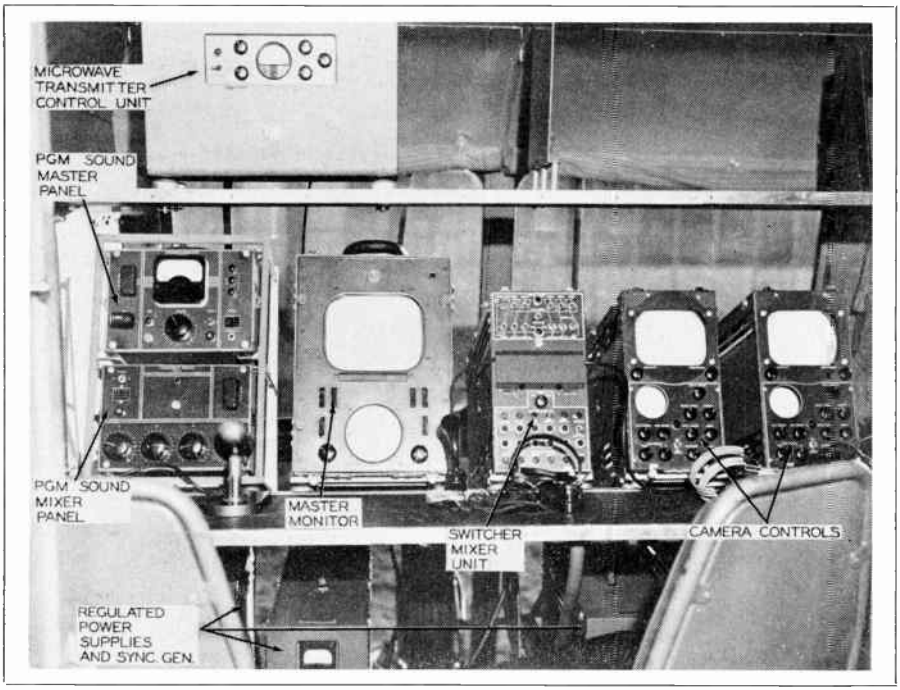

Figure 9.2F. The console of the Mobile Unit. Courtesy RCA. Inside the vehicle at the rear is a spacious operating table on which is mounted the equipment for controlling the camera circuits, switching the cameras and observing the picture. Left to right are the audio amplifier and mixer, the master monitor, a switching unit and two camera control units. At the upper left is the microwave transmitter control unit, and below the desk are two power supplies and the sync generator, all suitcase-type units.

ber of times to relax the strains in the tuning mechanism. To insure an essentially stable frequency, the flexes should be successively decreased from a maximum of one full turn to zero in 8 or 10 flexes.

The transmitter control unit is usually placed in the operating position alongside the camera control units as in the illustration of Fig. 9.2F. This unit is essentially a power supply furnishing the required AC and DC voltages. Located on the control panel are the modulation level controls, modulation selection switch (for test or video selection), fine frequency control and monitoring meter.

The microwave receiver, which may be located either at the main transmitter location or at the studio (when at different locations), is an exact replica in appearance of the transmitter. In this function the wave guide is shaped so that the open end, located at the focal point of the parabolic reflector, picks up the concentrated signal and feeds it to the receiver input. The receiver input circuits are enclosed in the cylindrical weatherproof housing attached to the rear of the parabola. This includes the 2K26 Klystron heterodyne oscillator, crystal detector-converter and first 4 IF stages. Output at IF frequency between 110 and 130 mc is fed over the connecting cable to additional IF stages in the receiver control unit, which is located within 200 feet of the parabolic dish. The receiver requires a separate power supply which is in a similar-sized unit to the control unit.

Jacks are mounted on the receiver chassis so that crystal detector current and grid current of the IF limiter stage

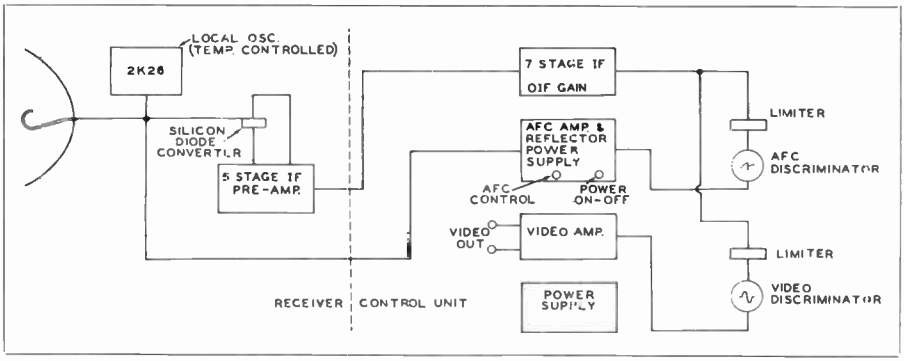

Figure 9.2G. Functional Block Diagram RCA television microwave relay receiver.

in the receiver control unit may be conveniently measured. By turning a knob on the receiver control panel, the IF gain is reduced until the grid current in the limiter stage is reduced to half-normal value, the setting of the gain control then indicating relative input signal. The operator may then use a meter to observe this current, and adjust the orientation of the dish to obtain maximum output signal.

Fig. 9.2G shows the functional block diagram of the RCA microwave television receiver. The control unit receives the signal at IF frequency from the receiver pre-amp on the rear of the dish and amplifies it sufficiently to provide satisfactory operation of the limiter and discriminator circuits. Two separate discriminator channels are provided. Each channel contains a limiter circuit, a balancing circuit, and the discriminator circuit proper. The first provides video signal to the video amplifier. This video amplifier feeds two outputs; (1) regular output line to studio control room (or main transmitter console if receiver is located there), and (2) signal to the monitor control circuits. The second discriminator channel is used to generate a control voltage for the AFC amplifier. Automatic Frequency Control is very important to stable operation of microwave relay receivers. The output of the AFC amplifier is used to control the

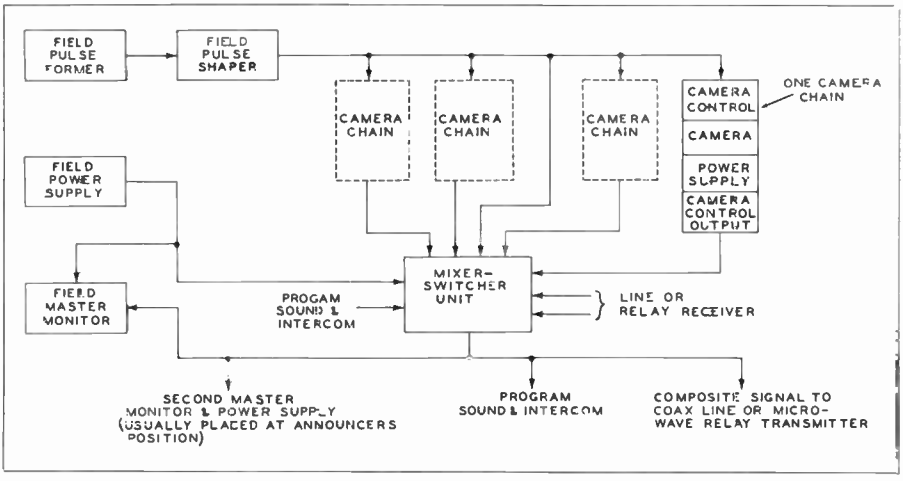

Figure 9.3A. Basic Block Diagram of Field Equipment Setup.

frequency of the 2K26 heterodyne oscillator. It operates in such a way that the peaks of the synchronizing signal appear at the same point of the discriminator characteristic within ±1 mc. regardless of picture content. The AFC amplifier is a special type of DC amplifier which receives a DC signal varying at a relatively slow rate, and amplifies this to supply a control voltage to the reflector of the 2K26. This control system will keep the receiver in proper adjustment for a change in transmitter frequency of ±20 mc. The control of the voltage output of the AFC amplifier is the main adjustment on the 2K26 oscillator frequency, and therefore, the tuning of the receiver. This allows routine tuning of the receiver at a console location where a monitoring kinescope and oscilloscope may be located.

9.3 *Setup of Field Equipment*

Most television stations that schedule a relatively heavy field programming use mobile trucks for transportion and set-up of equipment. A view of a typical truck interior setup is illustrated in Fig. 9.2F. The microwave relay transmitter is often mounted on the roof of the truck itself. Where stadiums exist with high points within 200-400 feet of the control equipment set-up, the transmitter is placed atop this point and interconnected with the cable. The rear of the mobile truck contains reels upon which are wound camera, relay transmitter, and power cables. These reels may be conveniently swung out into the clear so that cabling may be run in any direction. Leased telephone lines through the local Bell Telephone System are run to the field location for the accompanying sound. The field cameras

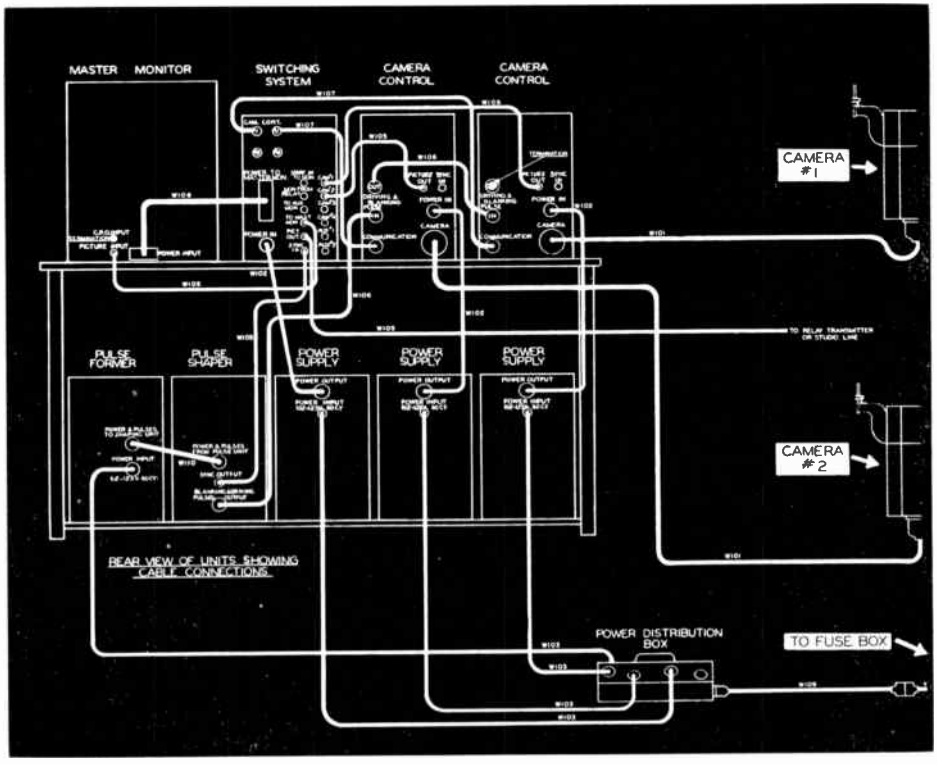

Figure 9.3B. Interconnection of Field Units. Courtesy RCA.

may be as much as 1000 feet from their respective control units and mixer-switcher unit. All video, audio, and intercommunication is usually handled from this switcher position.

Mobile trucks provide a convenient means for transporting the large amount of equipment and accessories necessary for a TV pickup. Adequate storage space is provided for at least three complete camera chains and power supplies, microwave relay equipment and parabolas, tripods, microphone and audio equipment, and tools. The power cable and associated equipment must be adaptable to any type of power source likely to be encountered, such as 115 volt -2 wire; 115-230 volt single-phase 3 wire; and 220 volt three-phase 4 wire systems.

Fig. 9.3A is a typical block diagram of field equipment set-up. It should be noted that each single camera chain is supplied by an independent power supply. The field synchronizing generator is in two separate units; the pulse-former and pulse-shaper. Fig. 9.3B illustrates the actual interconnection of units in a two-camera field chain of RCA design. The extra master monitor and power supply shown in the block diagram of 9.3A is usually placed at the announcer's position so that he may observe the picture actually on-the-air at any particular time.

After the equipment has been set up, cameras are aligned as in the studio, described in Chapter 6.

In the RCA system shown in Fig. 9.3B, the first installation inspection and adjustment is on the Power Distribution Box. This unit contains terminal-board links for adjustment to the particular power-supply source available, and pilot-lights to indicate operation. The links are on the terminal board at the rear of the box, and may be set for 3 types of power input as indicated in Fig. 9.3C. For the 115 volt, single-phase 2-wire system, the line is fused for 60 amps. The proper link settings are made, and the white and red wires are connected to one side of the line, and the green and black wires to the other side. For the 115-230 volt, single-phase 2-wire system, the links are adjusted as shown, the white wire terminated to neutral or grounded lead, the red to the outside lead, and the black to the other outside lead. The green is unconnected and the lug is taped to the cable. The line is fused at 40 amps for this service. For the 220 volt three-phase 4-wire system, the white goes to neutral or ground, the red, green and black to the line terminations. The line is fused at 30 amps. The operator will find that all makes of TV field equipment provide some comparable means of adapting the system to the type of power supply source encountered in practice.

Just as at the studio, the sync generator must be placed in operating condition before camera alignment and testing may be undertaken. Fig. 9.3D shows the operating controls on the pulse-former and pulse-shaper unit in

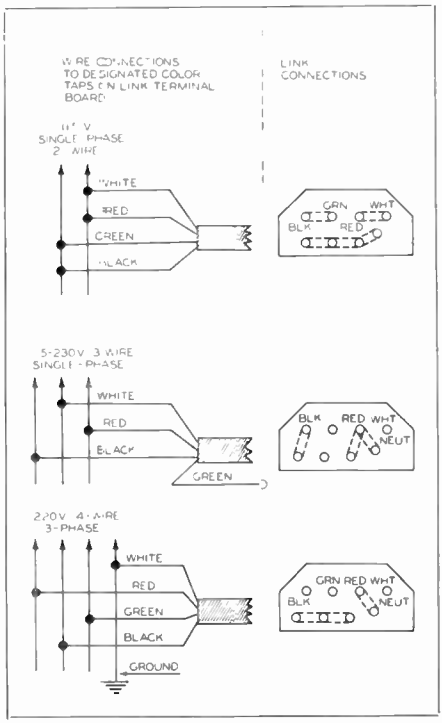

Figure 9.3C. Link and wire connections for RCA Power Distribution Box.

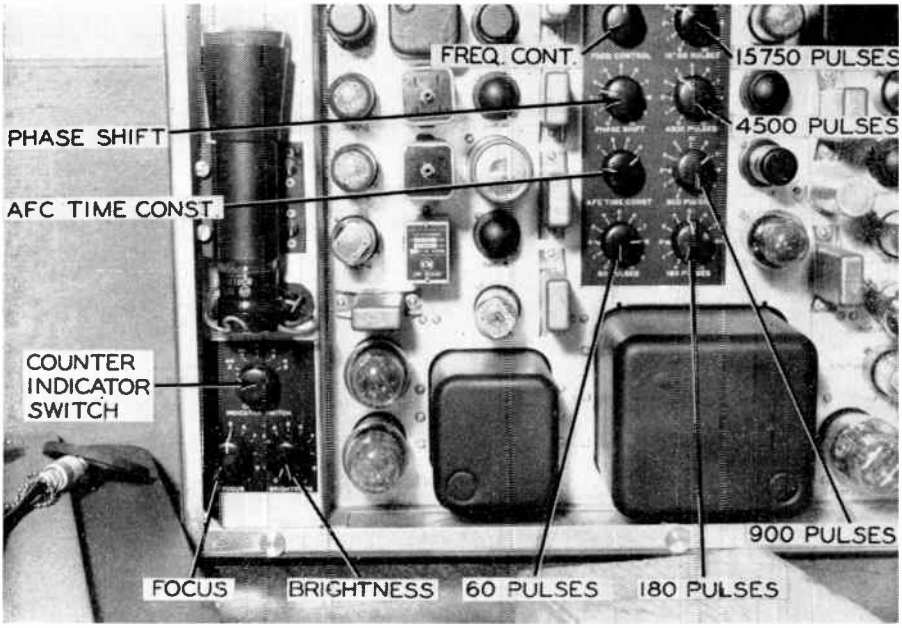

Figure 9.3D. (1) View showing controls of RCA Pulse Former Unit.

the RCA field system. It may be noted in (1) that the controls on this portable unit are similar to the controls on the pulse-former unit of the studio-type sync generator. The controls on the pulse-shaper unit (2) are the same in function, but in this case are screwdriver-adjusted with means of locking them in place to avoid changing from vibration or in transportation. Such units are usually adjusted at the studio and require little touching-up in the field.

After setup of the sync generator units, its operation is identical to that at the studio. The COUNTER INDICATOR SWITCH is rotated to the chain of frequency dividers and associated controls adjusted to provide the required count-down in that circuit. The master oscillator is then adjusted to its "on-frequency" condition as in the studio generator. The adjustments on the Shaper unit are then checked by observing the pulses on a portable oscilloscope of suitable characteristics at its SYNC OUTPUT terminals. The NUMBER OF EQUALIZING PULSES control is adjusted for a total of 18 equalizing and vertical sync pulses as observed. Then the VERTICAL PULSE DELAY control is varied until 6 equalizing pulses appear prior to the vertical sync pulses. After this the NUMBER OF VERTICAL PULSES control is adjusted for the appearance of the 6 V sync pulses in the vertical sync pulse interval.

When it is necessary to adjust the widths of the equalizing, vertical and horizontal pulses in the field, the scope is placed across the 75 ohm termination plug for that particular output on the output panel of the pulse-shaper unit. The widths of the blanking and driving signals may be checked in this same manner. Since the operator in the field will not have precision measuring equipment as may be found at the studio, RCA describes a field method satisfactory for such measurement. For measurement of the 31.5 and 15.75 kc pulses, one-microsecond markers are placed on the scope screen in the usual way. In order to observe the rise and fall traces of the pulses, it is necessary

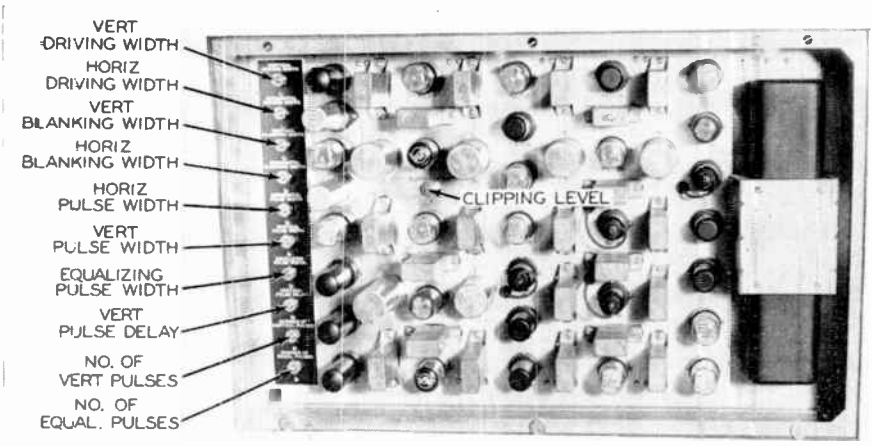

Figure 9.3D. (2) View showing controls of RCA Pulse Shoper, Field Unit.

to obtain some pulse delay with respect to the beginning of the sweep and to use external synchronizing for the scope. This sync signal may be obtained from the input end of the delay line in the pulse-shaper unit. The pulse to be measured may then be applied to the vertical amplifier of the scope, and the sync gain control adjusted until the start of the pulse coincides with one of the one-microsecond markers. The pulse width is then determined by counting the number of markers within the pulse. When the end of a pulse is not coincident with a marker, interpolation must be made or the distance accurately measured with a small-division ruler.

Since the widths of the 60 cycle pulses vary between 500 and 2000 microseconds, the use of one-microsecond markers is impractical. Also since this is the same frequency as the power line to which the sync generator is ordinarily locked, a method satisfactory for field use is to use a 60 cycle sine-wave sweep for the oscilloscope horizontal deflection. The 60 cycle sync pulse to be measured is then applied to the vertical plates of the scope, and the scope phased so that the pulse occurs during the most linear portion (center of horizontal sweep) of the sine wave. The picture on the scope screen is an edge-view of a circle with an arc dropped from it due to the occurrence of the pulse. The width of the pulse in percent is determined as follows:

$$\text{Percent width} = \frac{\text{length of arc}}{\text{circumference}} \times 100$$

the circumference of the circle being determined by multiplying the length of the sweep (diameter of the circle) by pi, or 3.1416.

Field measurements of pulse-widths are seldom necessary in practice except in emergencies when tubes have necessarily been replaced on location, or other adjustments have been necessary since leaving the maintenance department at the studio. Master monitors for field use now under development permit checking of sync and blanking by the pulse-cross method by simply placing the kinescope switch in the "pulse-cross" position.

As stated previously the highly important coordinating element of intercommunication control is incorporated at the switcher position. In the RCA system described herewith a dual plug on the headset cord has one grooved or rounded edge that can be located with the fingertips without visual help. For proper circuit connections the grooved or rounded edge of the plug is placed

toward the right and inserted in the double jacks provided at each position. The field program director's headset is plugged into jacks designated PROD which connect directly to the camera positions. By placing the "PROD PL" switch on the switcher panel to the up position, a private line from the studio director or production manager may be tied-in on this channel. Another switch is designated PROG SOUND in the up position, and DIRECTOR in the down position. This switch is normally operated in the up position, (PROG SOUND) and the program audio is carried to one earpiece in all headsets. By throwing this switch to the DIRECTOR position, the field program director may talk to all operating personnel over the program circuit. Normal operation provides separate communication for engineering and production personnel over their respective private lines. When desired, or in case of failure of engineering PL, a switch on top of the switcher unit may be thrown to a position where both engineering and production personnel use the program PL.

Direct communication by wire between the studio engineer and the relay transmitter control engineer is also provided for purposes of aligning the transmitter with the receiver.

CHAPTER

10

Technical Production of Field Events

10.1 Preliminary Considerations

Even before the field equipment can be set up and interconnected a number of preliminary considerations are involved. The type of event to be televised and the physical layout of the originating point determines the nature of vantage points available, number of cameras to be used, and general orientation of equipment. For example, in some cases where a mobile unit truck is available, circumstances will prevent setting up equipment inside the unit. This would occur if the vantage points of the cameras were necessarily more than 1000 feet from the nearest possible location of the mobile unit. This distance is the maximum allowable separation between cameras and control units in all present makes of field equipment. Such separation is very unusual, however, in practice.

The first preliminary consideration with which the technical director is concerned is the arrangement with the local Wire Order Chief (Bell Telephone System) for the proper audio lines to be used. This ordinarily involves the installation of at least two lines. One loop is equalized to at least 5000 cycles to carry the program sound. The other loop, in some instances, may be unequalized, since it is used primarily for intercommunication between the remote location and the studio both during preliminary testing (such as microwave system alignment), and the actual telecast. The latter is a necessity when local cut-backs to the studio are involved during the field event. Both lines are run to the prescribed location of the switcher unit from which point it is distributed via the intercommunication system.

Several other preliminary arrangements may be necessary. As an example, it often occurs that construction of special operating platforms is necessary for cameras and other equipment to provide suitable vantage points. This involves not only actual construction or arrangement for same, but in many instances must be reported to local building inspection teams as required by state laws. Some states require permits for such construction before work can be started. If a great amount of electrical wiring is involved, the local Board of Fire Underwriters must pass on the installation before use. It is important for the field Technical Supervisor to subscribe to the services of the local building and fire codes so that he is always acquainted with local laws and changes as they occur. Most station managements provide this subscription service for the use of the engineering department.

The availability of required power drain from the power source must be considered. In general for 117 volt single-phase power lines, about 1000 watts per power supply used in the field set up should be available. Approximately 5 kw of power is ordinarily sufficient for a dual camera chain, and

7.5 kw for a triple camera chain. Some pickup points may occur in areas where only DC power is available. In this case a portable gasoline engine-driven AC generator of the required power capability must be used. If the point in question is to be used on a seasonal basis, permanent installation of power lines from such a generator, or from the Power & Light Company may be warranted.

10.2 Program Considerations

The thought that must be given in planning and coordinating field events is emphasized by the magnitude of public interest in remote programs. If the reader carefully considers the most appealing programs of his own experience, he will realize that such events as baseball, football, political conventions, news events. wrestling and boxing are near the top of the list. Remote programs are receiving the widest public acceptance by actual analysis of televiewer interests.

Since the camera range must be broader in scope than at the studio, both in angles of coverage and possible lighting conditions, extreme care must be taken in planning camera vantage points for lens angles, and in camera chain alignment where some compromise in beam current to target voltage may be necessary for optimum results. In bright daylight with modern image orthicon tubes, it is necessary to use neutral-density filters to reduce the photocathode illumination to an amount where higher-than-normal beam current is not necessary to discharge the highlights. Since the field engineer is concerned with lighting vagaries that may change from hour to hour or even minute to minute, it is well for him to keep constantly in mind the target voltage-beam current relationship. He knows that for best signal-to-noise ratio, both target voltage and beam current are related to the average illumination on the photocathode. Camera controls which provide the automatic target set described previously provide a good compromise in the field over a large range of scene brightness. Unusually sharp pictures may be obtained in some instances, however, by a slight readjustment.

In considering such slight adjusting procedures for optimum results, the following points should be clearly visualized:

1. As average illumination decreases, target potential may be slightly increased in the positive direction. If increased excessively, beam current will have to be increased excessively to discharge the highlights, decreasing the signal-to-noise ratio.

2. If average illumination increases (as when the sun comes out from behind a black cloud) target potential may be slightly decreased (less positive). This adjustment should not be greater than allows optimum resolution with satisfactory signal-to-noise ratio. If the target is decreased in voltage too far, the cut-off point is reached, and the picture washes out.

Weather conditions in the open will affect camera performance unless due precaution is taken by the operator. In cold weather the camera heater should be turned on to shorten the warm-up time, and may be required at intervals throughout the program in extremely cold and blustery weather. If the image orthicon tends to retain an image, the tube may be running too cold. If a noticeable loss is apparent in picture resolution, the tube may be too warm,

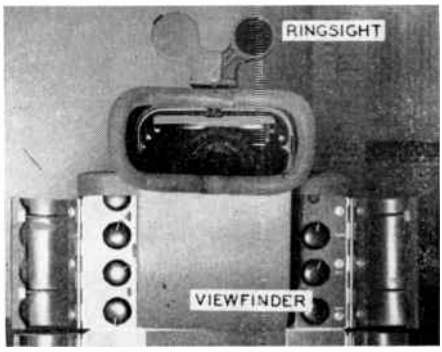

Figure 10.2A. Showing Rirgsight mounted on viewfinder hood.

and the heater should be turned off and operation of that camera discontinued until normal operating temperature is restored. Cameras under development are incorporating thermostatic controls to operate heaters or blowers as necessary to maintain optimum operating temperatures.

For sporting events where a large amount of panning must be done, a ring sight is often used as illustrated in Fig. 10.2A. When the operator looks through this ring sight, a number of concentric rings are placed on the field of view to facilitate keeping the center of attraction within the relative center of the picture tubes. In adjusting the ring sight, the center ring is made to enclose the picture area in the center of the viewfinder kinescope. Since this area will vary with the size of lens used, such adjustments are made only after the lens has been chosen. For telephoto lens of 17 inches and over, the entire picture is enclosed in the center ring of the ring sight.

The choice of lenses depend upon the nature of the event, the distance from the cameras, and production technique. Whereas at the studio a 135mm lens may be a "medium angle" or "narrow angle" device, this size may be a "wide angle" lens in the field, since relatively large camera distances may be encountered. Certain relationships may be tabulated for lens size to distance as determined by experience in the field as follows:

The 50 or 90mm lens for closeups of announcer such as required for game recapitulation or line-up; These lenses may also be used for opening or overall shots requiring very wide angles. A "close-up" for the 50mm lens is not beyond 50 feet, and no greater than 150 feet for the 90mm lens.

The 135mm or the 8½" lens may adequately cover such action as doubleplays in baseball, depending upon necessary distance of the camera. Camera orientation at most boxing and wrestling matches is such that the 135mm size will cover the ring sufficiently to necessitate only slight panning. This lens is also popularly used for "cover shots" such as pitcher-to-batter with the camera placed behind and above home plate.

The 13½, 17 and 20-inch lens is widely used for close-up plays in football or outfield action in baseball. When it is necessary to use one of these long focal length lenses on the same turret with a short lens, the end of the telephoto lens may show in the wide angle view of the short lens. To avoid this occurrence, the long lens should be mounted diagonally opposite the shortest lens used. When lens with screw-type bases are used. many stations, prefer to use special bayonet-type adaptors so that the long lens may be quickly removed in the interim of changing from a close-up to wide-angle, while another camera is "on-air." Whether using such adaptors or not, it is advisable to support a long lens by means of a chain fastened securely to the pickup head or friction head in such a manner as not to obstruct proper panning or tilting of the camera. This is especially important if accidental falling of the lens would drop it into audience seating arrangements below.

Sunshades are usually used on field lenses especially when necessary to "shoot" toward the sun or extreme highlights. The fixed stops for the telephoto-type lens is supported by the sunshade mount.

For optimum picture quality and good depth of focus, the smallest stop is used consistent with available light and type of image orthicon. A stop too small or too large reduces picture resolution. Too large a stop requires excessive beam current, decreasing signal-to-noise ratio. The use of long lenses with their fixed stops requires additional alertness on the part of the field camera control unit operator. A change in scenic illumination and contrast results in background and signal level changes. This requires constant attention to video gain and pedestal controls. When the picture waveform on the CRO is ad-

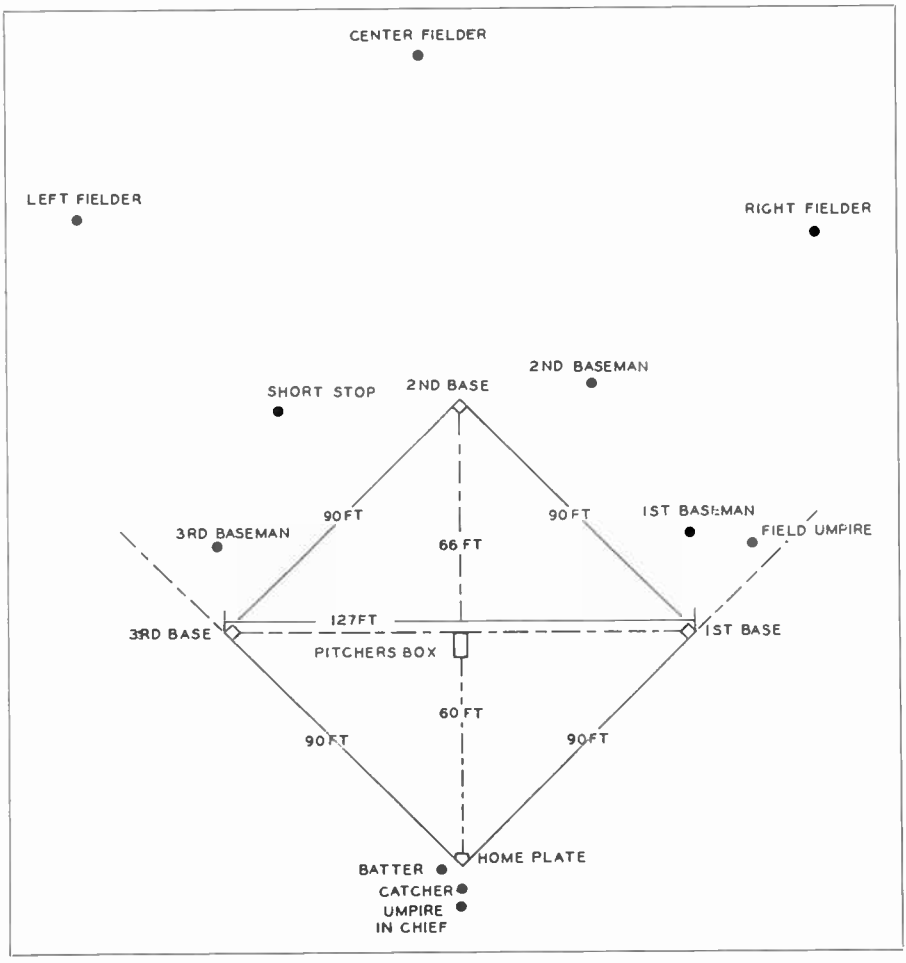

Figure 10.3A. Dimensions of Baseball Diamond. Exact positions of baseman, fielders and shortstop are variable, as well as dimensions of outfield.

justed to a 2-inch amplitude, the pedestal and gain controls are adjusted to allow at least one-eighth inch between maximum picture black and blanking level. Nearly all stations employ the calibrated level scales over the CRO tube to facilitate adjustment of this amount of setup, and overall video level.

10.3 The Baseball Telecast

Baseball is one of the more popular remote telecasts in modern TV programming schedules. Sufficient experience has been gained to point up a general pattern which has proved most successful in practice, although problems related to the individual field and topography vary considerably.

The fundamental data for baseball coverage is presented in Fig. 10.3A. The diamond is laid out in a 90-foot square. The pitchers-box is 60 feet from home base, and a distance of 66 feet separates the pitcher and second base. The horizontal coverage of bases only may be observed to include 127 feet. The size of the outfield and distance to rear and side walls vary with the individual diamonds.

The nature of baseball is such that

the most common area of attention during play occurs in a line including the umpire, catcher, batter and pitcher; that is, the major portion of the actual telecast time will be centered on this general location. For this reason it has become almost universal to spot the Number 1 camera behind and above this home plate area. Whenever possible this camera (or two cameras) are spotted on a line directly behind the home plate, as illustrated in Fig. 10.3B (1). This coverage of umpire, catcher, batter and pitcher is usually referred to as the "cover shot," and the "Number 1" camera is usually designated to this purpose as well as panning to other areas. In (1) of 10.3B the camera is 50 feet on a direct line behind home plate, and the 135mm lens coverage is shown. This results in optimum, large-sized images of the center of interest. In (2) is illustrated the effect of placing the camera to one side of this direct line. The camera to the left is placed 50 feet that side of the home-plate axis, on the line 50 feet behind home plate. In this case the reference axis is that line necessary to include the "big three," umpire, catcher and batter. It is observed that the 135mm lens with its horizontal angle of 13° would not cover the pitcher, and these three images would be smaller than in the case of the (1) position due to the greater distance. It is shown that the use of the 50mm lens with its horizontal angle of 34° would be necessary to cover the same action that could be covered with a 135mm lens in the (1) position. Naturally the use of the smaller lens gives smaller images, and is not as desirable as the 135mm lens at this distance. Thus it may be realized why the direct line orientation for the cover shot has become most popular in practice. The only time such location is deviated from is when this location is impossible to achieve due to local circumstances. It is observed that the camera to the right 100 feet off center axis presents the same problem, only in this case the images would be

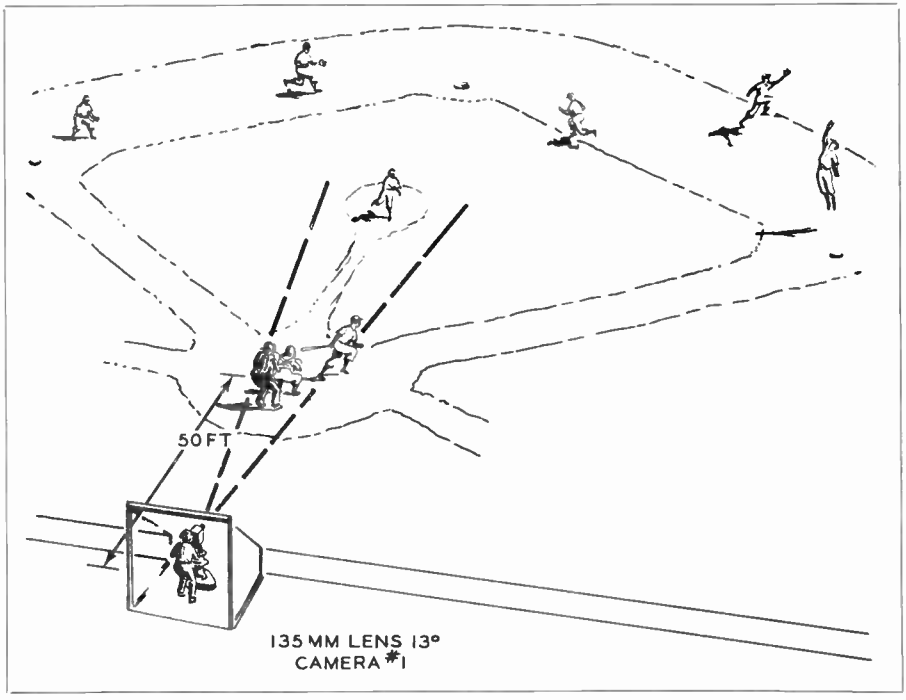

Figure 10.3B. (1).

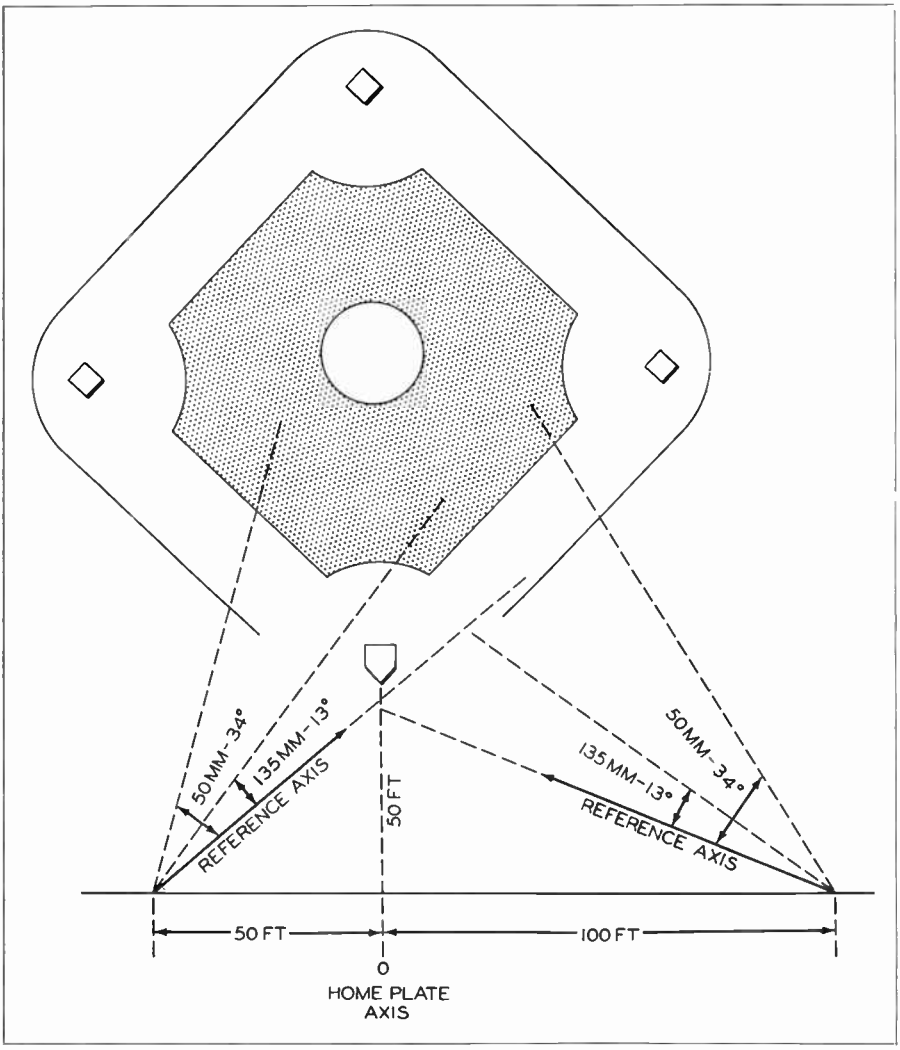

Figure 10.3B. (2).

still smaller due to the increased distance. These positions are sometimes used in conjunction with a camera directly behind the umpire to lend added color and variety during the game.

Just as the horizontal area of field of view for any given lens is determined by camera position, so the vertical angle must be taken into consideration. As the height increases for a given lens and distance behind home plate, the vertical field becomes the limiting factor. This is basically illustrated by Fig. 10.3C. If the camera considered in Fig. 10.3B(1), placed 50 feet behind home plate and using a 135mm lens, is just 12 feet high, the desired cover shot is obtained with maximum image size. Should the only available spot at 50 feet on this direct cover line be higher, say 25 feet, the solid lines of Fig. 10.3C includes the resulting vertical angle of the 135mm lens. (10 degrees, See Table 6.3D, Chapter 6.) Thus from this height

and distance, the 135mm lens would supply a shot at a size more "Close-up" than the desired cover shot.

The operator will be able to ascertain before-hand the exact sizes of lens needed for specified shots if he plots all available data as in Figs. 10.3A to 10.3C. Experienced technicians acquire a sense which permits them to judge these factors by eye after some time in daily routine operations. It is most helpful for the student and broadcast newcomer, however, to practice such graphical anaylsis so that he gains an inside comprehension even before actual practice on the equipment is involved.

The practice of multiple camera chain setup varies in practice depending upon production whims and existent facilities. In two-camera pickups, the Number 2 camera provides the "color" shots in most instances. This means that in addition to following some of the plays in the infield and outfield, the camera is in such position to be able to view spectators in the stands, the dugouts, and view of the field different from camera Number 1 to lend variety. In three-camera pickups, two cameras may be used in the "cover shot" position, and camera Number 3 located for color. This type of setup provides widest production choice of plays and

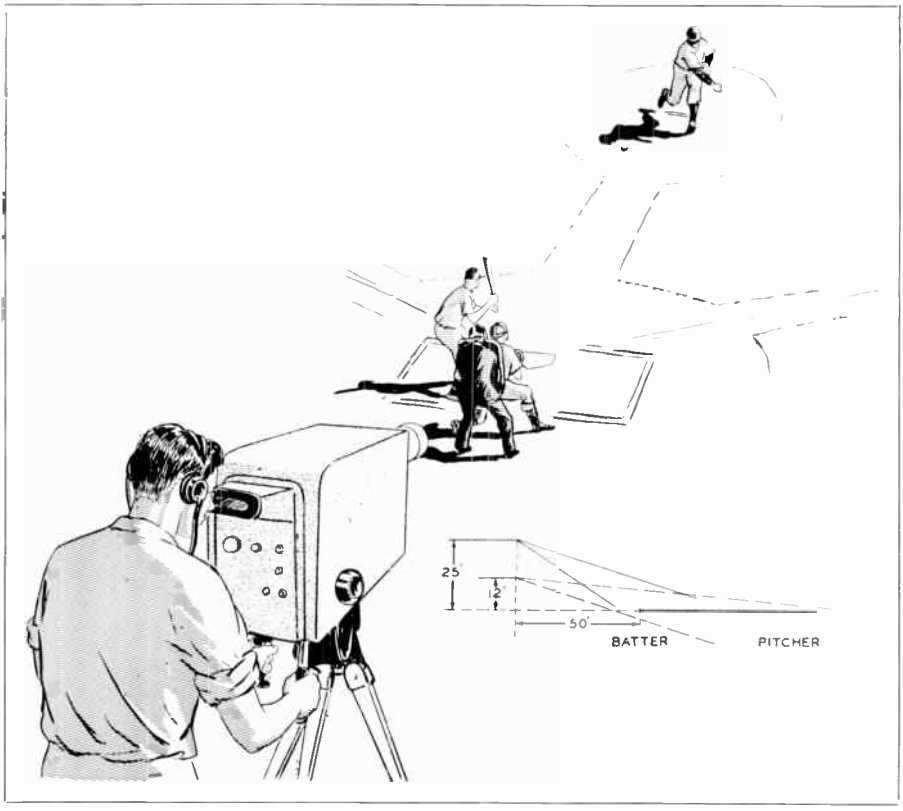

Figure 10.3C. Effect of height on field of view covered. In this specific case, the lens is a 135mm, giving a vertical angle of 10 degrees. Thus it is noted that if the camera is placed 50 feet behind home plate, and only 12 feet high, maximum image size of the cover shot occurs (dashed line) as the horizontal angle is as shown in Figure 10.3B (1). It is also noted that should this camera be 25 feet high, the vertical angle of the 135mm lens (solid line) would limit the field to a point in between the batter and pitcher, if tilted to include umpire, catcher and batter.

human interest views. As an example, the Number 1 camera may take the pitcher's delivery, and Number 2 (in same "cover" position) equipped with a 17" lens follows the ball to the outfield. Should the play have resulted in an infield hit, camera Number 1 may remain on the batter (now the runner) while he tries for first base. Alternatively, the Number 3 camera may be located along the 1st base line and catch the runner from that position. This is often preferred by sports directors as it develops the play "into the camera," considered an ideal pickup.

The Zoomar lens is popularly used on one of the cameras in place of the turret lenses, especially for daylight games. To acquaint the reader with the setup and use of this lens, the following data from the Zoomar Instruction Manual is presented.*

The majority of lenses used in television today were not designed for that purpose. Generally, they are single purpose, still camera lenses. Their fields are much larger than necessary for the Orthicon tube, allowing a rather large margin of error in alignment.

The television Zoomar, on the other hand, was designed especially for use with the Orthicon tube, covering exactly its 1.6 inch field aperture. Furthermore, the Zoomar differs radically from all lenses in that its zooming action causes it constantly to change focal length. If care isn't taken in preparing the camera and the Orthicon tube, a shift of the center of the picture will occur during the zoom. The frame center and the optical axis must therefore be well in alignment.

The best way to set up the Orthicon tube for use with the Zoomar Lens is to use a Video Analyzer. (See section 6.2.) Up to now, the Video Analyzer is the only instrument which permits exact adjustment of the camera without guesswork. All other methods are approximations and does not assure perfect camera alignment and adjustment. If a Video Analyzer is not available, the following method should be used to give the next best results for camera alignment. It cannot be over-emphasized how important this alignment is because even small deviations from correct alignment might show up in poor picture quality.

1. Leave the standard RCA Orthicon turret head on the camera.
2. Remove the upper lens, and move the orthicon tube all the way forward.
3. Back off about six feet from the camera, and with one eye closed, look into the upper lens opening, moving your eye about until its reflected image is mirrored in the center of the Orthicon tube. Check to see if the mirrored image of the eye is also in the center of the empty turret lens opening.
4. If the mirrored eye is not exactly in the center of the Orthicon tube and the current opening, move the turret or the Orthicon tube within the camera until that condition is reached.
5. Replace the lens and cap it, or turn the turret to another capped lens.
6. Set the beam and target, and then rotate the orth focus on the control unit left and right until the dynode spots (imperfections on the first dynode) are visible. Be sure that there is enough gain to see the imperfections clearly on the monitor.
7. The imperfections *should* appear to go in and out of focus as the orth focus knob is rotated slightly through focus. If the alignment current and alignment coil rotation are correct, one of two things will happen: either the imperfections will change focus without changing their location on the screen, or they will be astigmatic in appearance, becoming elongated in one direction for one position of the knob, normal in the correct knob position, and elongated in a direction opposite to the first position in the other knob position.

(NOTE: If these imperfections

*Courtesy Back Video Corp.

travel on the monitor screen, the beam in the orthicon is not traveling down the center of the tube. This can be corrected by changing the alignment current on the camera, or if this does not help, turn the alignment coil with a screwdriver, and at the same time adjust the alignment current until the central portion of the image stands still as the orth focus is varied. Use a non-metallic screw-driver when making the alignment coil adjustment. Also to minimize the effects of the magnetic fields on the final correct adjustment, the viewfinder must be in position.)

8. Often when the camera is in actual use, the dynode imperfections show up in the dark areas of the image and the tube will have to be defocused. The smaller the imperfections, the less de-focusing will be necessary and the better the resolution will be over the entire screen area. Multiple small imperfections, therefore, are more desirable than a few large ones. However, if the small imperfections are too numerous, the whole image will tend to have a grayish cast with correspondingly poor resolution in the darker areas. It is important that all de-focusing always be done by turning the orth focus knob in a clockwise direction for RCA field cameras (from left to right), counter-clockwise for Du Mont cameras and RCA studio equipment.

When this condition is reached the camera and the Orthicon tube are ready for the television Zoomar.

The Zoomar is equipped with a special turret plate which replaces the camera turret and fits the front of the RCA image Orthicon camera. This turret plate, when properly mounted on the camera, firmly supports the lens.

Mounting, while an exact procedure, is a simple matter, requiring only an adherence to the step by step course detailed here. It is as follows:

1. The Zoom push-pull lever, which consists of a ¼ inch rod with a 2½-inch knob, is to be inserted from the rear through the camera shaft.
2. Remove the camera turret.
3. Fit the Zoomar turret in place of the vacated camera turret. Face the key slot of the turret shaft downward before connecting the lens to the camera.
4. After the fastening nut is tightened, connect the Zoom push-pull lever and tighten both thumb screws of the lens slightly.
5. Then tighten evenly both the side balancing screws, but not too tightly, for proper alignment and rigidity.

The Zoomar is now ready for optical adjustment.

The Zoomar was designed to be automatically in focus during its operation at all intermediate Zoom positions after it had been adjusted for the two extreme positions. Focusing should be done at the same aperture to be used during the broadcast. If it is necessary to make the adjustment at a different aperture, or if the light intensity should change during use, a slight correction can be made while broadcasting.

The procedure to be followed in adjusting the Zoomar for correct focus is as follows:

1. When the lens is installed on the camera, point it at a suitable target as far away as conditions permit.
2. Adjust for proper aperture.
3. Turn the Zoomar focusing knob as far as it will go clockwise.
4. Focus with the camera focusing knob until the target is sharply pictured.
5. Pull the Zoom lever all the way back until the extreme telephoto position is reached. Focus on the target with the *Zoomar focusing knob* by turning it slowly *counter-clockwise*. Do not change the position of the camera focusing control.
6. When the picture is in sharp focus, push the Zoom all the way forward and check if the target is still in

sharp focus in the wide angle position. If not, re-focus that position slightly with the *camera focusing knob*. Repeat this procedure in both extreme positions until the target is sharply pictured.

It is important to keep in mind that focusing in the wide angle position should only be done with the *camera focusing knob*, and in the telephoto position all focusing should be done with the *ZOOM LENS focusing knob*.

When the two extreme positions are correctly focused, all focusing on targets of different distances should thereafter be done with the Zoomar focusing knob only. The camera focusing knob is not to be touched any more.

COMPENSATING FOR VIGNETTING IN ONE CORNER. This condition will occur only if the camera was not lined up correctly with a Video Analyzer. The appearance of vignetting in one corner indicates that the Zoomar is incorrectly centered with the Image Orthicon tube. This condition should be corrected in the following manner:

Loosen the aligning screws on the Zoomar turret and, while watching the screen, turn the Zoomar turret slightly. Fasten and realign the Zoomar with the three aligning screws until the image vignettes simultaneously on all four corners, or does not vignette at all.

A very definite check for turret alignment is to aim at a target in telephoto position. Now zoom into wide angle position. If the middle of the target is off center, the optical and the electrical centers of the Image Orthicon were not identical. Most of the time a slight twist of the Zoomar turret after loosening the three balancing screws will correct that condition.

CORRECTING FOR SYMMETRICAL VIGNETTING. If vignetting occurs in all four corners simultaneously, it indicates that the pattern of the Orthicon tube is larger than the area covered by the Zoomar. The Zoomar was designed especially for the RCA Image Orthicon camera with its 1.6 inch diagonal opening. If the scanning pattern is larger than 1.6 inches, the Orthicon tube is over-scanning and vignetting will occur. This type of vignetting can best be eliminated by proper scanning (Video Analyzer).

When correcting for vignetting in all four corners, the image should be watched on the monitor. Vignetting seen on the finder does not necessarily mean that the transmitted picture is vignetting, for the finder image has been designed to cover a larger area than the monitor. It should also be kept in mind that a slight vignetting in all four corners is not objectionable, since the receiving tubes in television sets show rounded corners.

Since the Zoomar Lens is designed for the standard orthicon frame of 24 x 32mm, *any over-scanning will result in poor edge definition while using the Zoomar Lens*. Over-scanning should therefore be avoided.

USING THE TELEVISION ZOOMAR. The many special effects possible only with the Zoomar can best be realized and kept visually fresh in the viewer's eye when its unique properties are used in moderation.

It is also advisable to operate the Zoomar stopped down as much as possible within the prevailing light conditions and Orthicon sensitivity. *Use Orthicon tubes No. 5820.*

In a sporting event where there is a great deal of movement, follow the action in the regular manner by panning the camera, manipulating the Zoom action slowly and ONLY WHEN NECESSARY. Too much zooming will defeat its purpose and distract from the game being televised.

A smooth Zoom action can be attained by grasping the control lever in a normal relaxed manner and squeezing, not pushing the control backward and forward. Apply this pressure slowly so that the beginning of the Zoom is hardly perceptible.

Unless the action of the game specifically calls for zooming try to *under-*

zoom: the effect will be all the greater. If a visual impact designed to startle the audience is desired, a fast zoom is permissible. However, it should not be attempted too often.

It is very important to start and end the zoom slowly and gradually. A sudden starting or ending zoom gives an unnatural effect and should be avoided.

Using the Zoomar for baseball telecasting is discussed in the Back Video Manual by Capt. W. C. Eddy, at one time manager of WBKB, relative to that stations experiences in Chicago. His views follow:

"Television coverage of baseball in the past has, in the majority of cases, been limited to a visual adaptation of the techniques developed in radio broadcasting. It has been increasingly evident that the present accepted use of a camera in fortifying the audio description has introduced confusion into the broadcast, rather than to clarify that description. This is based primarily on the inability of any optical system to adjust itself quickly to both the varying depths of focus and varying angles of coverage."

"The Zoomar solves one of these problems through its ability to change focus without the loss of scene or sharpness. While it is true that a qualified baseball fan might be able to integrate this combined aural description and spotty camera coverage into a continuity of action, it is doubtful that such coverage would make sense to the average layman who does not have a complete knowledge of baseball."

"Mr. Philip K. Wrigley and his associates with the Chicago Cubs have recognized this fact during the two years of experimental coverage of the Cubs' baseball by WBKB. At a meeting, Mr. Wrigley suggested that steps be taken to analyze and revise television techniques with a view toward creating a production method which would not only correct these deficiencies, but would popularize baseball with the non-fan, as well as satisfy the regular baseball fan and viewer."

"In cooperation with KTLA in Los Angeles, WBKB set up an active test work under field conditions at Los Angeles."

"In our analysis of the problem, it was apparent that many of the basic precepts of good showmanship had been overlooked in presentations thus far attempted by television stations covering baseball. Some of these inconsistencies were:

1. All action on the playing field developed away from cameras located behind home plate, so reducing rather than heightening the dramatic impact of the play.
2. The camera placements in common use normally resulted in a wide variation of viewing angles, causing abnormal or complete dis-orientation of the non-qualified viewer.
3. Because of the limited field of the television lens, normal camera coverage could only show one or two players in detail, thus destroying any visual association with the other members of the team or the playing field itself.
4. It has been a precept in motion picture switching techniques that the center of interest should not change position on the screen during scene-to-scene transitions. Considerable thought in motion picture is given to the pre-planning of shots in order to retain the focal point of interest in the same relative position during a change of scenes. Television has heretofore disregarded this function.

"In order to develop a satisfactory television technique, it was necessary that as many of the fundamentals of good showmanship as possible be incorporated into the video coverage. Some of these requirements were:"

1. Change in the viewing angle from scene to scene should not be tolerated.
2. Action of the play should develop toward, rather than away from the cameras, in order to heighten the dramatic impact.

3. A viewpoint or camera position must be selected which would orientate the individual player with the team, as well as with the playing field.
4. Maximum utilization of good camera techniques and modern equipment must be employed in any successful coverage.

"Coverage in infield plays was the first problem. To satisfy the above-listed requirements, a position alongside the home dugout at third base was selected. It appeared preferable to have this camera quickly adjustable in height, so that it could either shoot from the ground level or be elevated to a position from which first base would be visible over the pitcher's mound."

"Various camera heights were tried from the dugout location, and it was established that the lowest level possible afforded the most dramatic coverage."

"The second camera position was selected for panoramic coverage of the entire field, with the camera equipped with the Zoomar. In keeping with our plan of establishing a fixed viewing angle, this camera position was chosen in the far, left field at the foul line, permitting use of the foul line as an orientation reference point in establishing the geography of the play."

"With a 340-foot range to home plate, a normal Zoomar Lens thus could cover the infield satisfactorily and further permit close-up work on any play or player that appeared interesting. It was further evident that the speed of a hit ball would optically be reduced at the start of its trajectory, thus permitting the cameraman to follow the ball into the outfield. Use of the Zoomar Lens then permitted a full details shot of the play, and the following of the delivery of the ball back to the infield."

"The third camera position was selected in the stands, in order to provide the psychological advantage of covering the game from the typical fan's viewpoint. Necessarily this position should be in a spot which provides approximately the same viewing angle as locations one and two. By using this camera for semi-panoramic coverage of the playing field, with actual fans in the foreground, a strong psychological tie-in between audience and player is provided. By utilizing this location as the viewpoint of the announcer, it is possible to provide a highly satisfactory audio coverage of the game."

"Competent use of all three cameras provides sufficient story material at the directional console for satisfactory cutting into a well-balanced and acceptable production which will appeal to the viewer from the dramatic as well as the reportorial standpoint."

"While variations of the locations mentioned can be easily incorporated, the broadcaster must be particularly careful to observe these cardinal points of showmanship:

1. Wherever possible, action should develop into, rather than away from the cameras.
2. Angle of viewing from camera to camera should not change appreciably in switch shots.
3. Introduction of players and fans into the foreground of the composed shot enhances the psychological effect of the picture, and ties the audience closer to the fans' reaction.
4. Vertical camera angles should be kept at a minimum on all panoramic effects.
5. Reaction shots of announcers, fans, and players should be used liberally to fill in non-spectacular periods of the game.
6. Close-up switch shots from the dugout camera should only be used in conjunction with and following complete panoramic coverage of the play by the Television Zoomar, in order to orientate the viewer properly.
7. Panoramic camera (the TELEVISION ZOOMAR) should normally be operated in unzoomed setting, and in following a ball to the outfield should not attempt to hold the ball in center screen by change of

horizon lever. An unzoomed pan shot should be used until the trajectory of the ball is such that the camera can safely be zoomed without changing horizon.

8. Use of the zoom feature of the panoramic camera should be held to those situations where closeups are either required or preferable. Continual in-and-out use of this lens destroys its advantages and the impact of the shot.
9. Zoomar shots should be accomplished as slowly as possible to preserve satisfactory orientation of the viewer.

"It is patent that the principles of showmanship outlined in this description will have equal importance in the coverage of sporting events other than baseball, and that, properly employed, these basic precepts will contribute to the growth of interest in a sport by the television audience, resulting in the creation of new fans at the box office."

In general it will be noted that camera sequence, whether acomplished by the Zoomar or by camera switching, follows a specific order of events. This may be outlined as:

1. View of batter walking to plate; 13½" or 17" lens, or Zoomar-in (narrow angle). Provides close-up image, maximum size.
2. Pitcher winds up—delivers; cover shot with 135mm lens, or Zoomar-out (wide angle). Viewer is able to follow "big-four"; umpire, catcher, batter, pitcher.

When a ball is hit, the point is reached which tests the skill of the program director "calling the shots," the switcher operator and the cameramen. Assuming that camera Number 1 is the cover shot camera as in (2) above, the following typical plays are common:

Infield Hit—Two Cameras: Hit ball is grounder toward shortstop. Number 1 camera remains on ball by panning. Stops on shortstop as he scoops up ball and throws toward first baseman. "SWITCH TO TWO." Camera two is using 8½" lens to give a medium-close-up of first base area, catching either "OUT!" or "SAFE!" play there. Such action is facilitated by predetermined instructions for the cameramen. For example, camera Number 1 operator may be instructed to always keep his lens angle "on the ball." Camera two operator may be instructed to always "follow the runner." The program director, watching the monitors, then calls to the switcher for the proper cuts.

Infield Hit—Three Cameras: Hit ball is grounded toward shortstop as above. Camera 1 operator pans the ball. "TAKE THREE!" Number 3 camera providing medium close-up of shortstop catching ball is equipped with the 8½" lens or 13½" lens in the operating position (depending upon distance). Shortstop throws toward first. "TAKE TWO!" Number two camera is trained on first with a 13½" or 17" lens turreted to operating position, providing close-up of play at first base. It is noted that this sequence provides close-up plays rather than the more general coverage of the two-camera operation. This procedure requires unusual alertness on the part of the cameramen who may be pre-instructed as: Number 1, "follow the ball." Number two, "always take close-up of likely culmination of play," Number 3, "always take close-up (medium angle) of likely receiver of hit ball."

For a change of pace to lend variety to the pickup, the director may change these pre-set instructions at intervals during the game. For example, in the three-camera pickup during dull moments when Number three camera may be instructed to pickup "color" (such as dugout activity or fans in the stands), the other two cameras will follow a more general, wider-angle pickup.

Infield Hit—Zoomar: The number one camera "zooms-in" to narrow angle as shortstop scoops up ball, throws toward first. "TAKE TWO!" Camera two is turreted to (for example) the 13½" lens, catching close-up of play at first base.

Experienced cameramen are always instructed to use their best judgment during active play. An example of this is when a player is stealing base. The director usually designates one cameraman to watch for such activity and catch it when possible.

If the hit should be to the outfield, the general procedure is the same. Camera 1 follows the ball, and either zooms to the outfield area, or another camera switched in with a 17″ lens to catch the close-up of outfield activity. This camera should ideally be higher than camera 1, since the relatively low height for proper cover shot is insufficient for clear coverage of the outfield.

10.4 Football Pickups

The basic dimensions concerned with football coverage are given in Fig. 10.4A. The actual playing field is 100 yards (300 feet) by 50 yards (150 feet). The goal posts in intercollegiate football are 10 yards behind the end line, making for an overall horizontal area of 120 yards, or 360 feet. Drawn in Fig. 10.4A are the plots of the horizontal angles and effective area covered for the 35mm, 50mm and 135mm lenses, assuming the camera to be located 150 feet from the nearest edge of the active playing field. Also shown is the nearest and farthest area of focus assuming the camera to be 50 feet higher than the playing field. In this specific case, the 35 or 50mm lens would be used for team orientation or general overall views, and the 135mm used for medium close-up of teams as they line up for scrimmage. A second camera, equipped with a complement of lenses such as the 8½, 13½ and 17″ lenses would catch close-up shots of in-

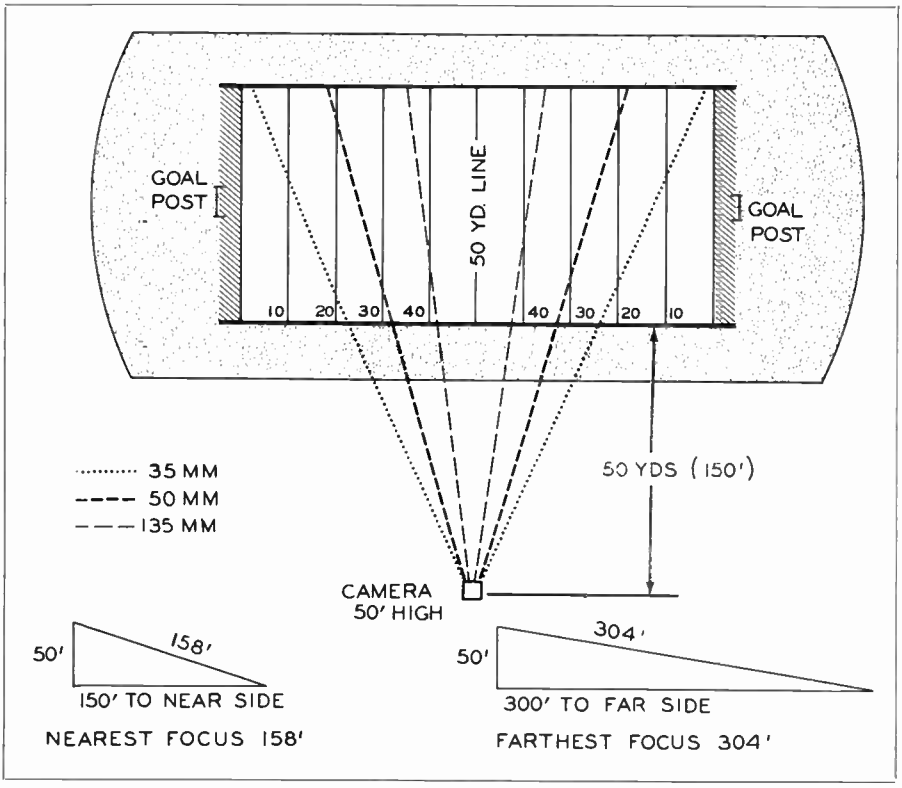

Figure 10.4A.

line scrimmage, passing, receiving, kicking, etc.

The field supervisor, technical director or person responsible for the technical setup at the field is faced with one primary problem on an initial trial. This concerns the direction in which the field is laid out. He is most fortunate in the Northern Hemisphere when the field runs east and west. Cameras and equipment may then be setup on the south side without worrying about shooting into the sun, since the sun will be at least slightly to the south. If the field runs north and south, the choice is a compromise at best. If he chooses the west side (to prevent shooting into the sun toward evening), the southerly location of the sun in the fall and winter months may present problems. If he chooses the east side, the source of trouble is doubled, since now the sunset-time will be added to the southern brightness. Other factors being equal therefore, the proper choice would be the west side of a north-south football field.

Obviously other factors may enter to influence choice of camera location. For example, the stadium may be very high on the west side of a north-south field, sufficiently high to block any possible direct sun from the late evening sky. The source of power and optimum location for the mobile unit may be on the east side of this field. Thus the likely choice in this instance would be the east side of the stadium.

As a general rule, however, the optimum location for cameras is on the south side of an east-west field, and on the west side of a north-south field.

Most stations use one or two cameras 100 to 300 feet (or more) from the edge of the field, and one camera directly along the field edge or within about 20 feet. One typical three-camera set up employs cameras No. 1 and No. 2, 300 feet from the edge of the field on an extension of the 50 yard line (center of field), and camera No. 3 20 feet from the field at about midway between center and one goal post. Camera No. 1 is equipped with the television Zoomar lens. Camera No. 2 is turret-controlled with 8½, 13½ and 17″ lenses. Camera No. 3 at the field location provided color and "field level" closeups when called for.

A wide angle lens (such as the 35-mm, 50mm or 90mm depending upon distance) is usually used for the kick-off. Each operator is pre-instructed for such possible developments from the line as a pass, kick or run. Men familiar with the game make the best cameramen for any sport telecast.

Three cameras are usually the maximum for football, baseball or almost any field event. One specific departure from this is the American Broadcasting Company pickup of football from the Los Angeles Coliseum, made by KECA-TV of that city. This stadium seats 105,000 spectators, and four cameras are used in the ABC pickup. Cameras No. 1 and No. 2 are placed approximately 150 feet from the near edge of the field, camera No. 3 is on the track adjacent to the field, and camera No. 4 is on the press box atop the stadium about 110 feet above the level of the playing field. (The playing field at the Los Angeles Coliseum is 32 feet below ground level.) Cameras 1 and 2 cover basic action. In daytime games, camera 1 is Zoomar equipped. Camera 2 employs a 25″, 17″ and 13½″ lens turret. Camera 1 with the Zoomar usually starts the pickup of any play, camera 2 taking the action once it has become determined as to the nature of the play. Camera 3 is used to give the viewer dramatic closeups of some plays, and is used to provide color. Camera 4 is used to give clear overall views, and to pick up blackboard discussions of the announcers when called for. The audio and production personnel are set up at this point.

The sound portion of sporting events should not be neglected in planning. Nothing is more disconcerting to the sports fan than to see an exciting play developing with almost complete background silence from the loudspeaker.

The cheers (and jeers) of the fans present at the game should be ever present in the audio, and mikes should be spotted at stategic points for this pickup. Parabolic-type microphones are often used in the field to pick up cheers and game-sounds. Without such mixing-in of on-the-spot sound, atmosphere is almost completely lacking.

10.5 *Miscellaneous Field-Events Data*

To facilitate the drawing of linear graphs for analysis of camera setups on the most popular telecasts, basic dimensions of the area of activities are presented as follows:

Boxing and Wrestling: The standard sized ring is 24 feet square. At least one camera is usually placed at "ringside" for dramatic closeups of holds or blows. Cameras placed farther back may be used equipped with the proper complement of longer focal-length lens. This event is usually placed under lights, adequate for modern image orthicons without further lighting except in unusual instances at smaller events. In indoor events of this type, cameras cannot be placed too far away due to large amounts of haze from smoking spectators. An hydrolic-type dolly is often used for the main camera at ringside to gain variable angles of shots close to the action.

Ice Hockey: This game is also most often staged under lights, and usually indoors. The standard ice hockey playing area is 200 feet long by 85 feet wide, although some games are played on smaller areas. When staged indoors, lighting is usually adequate. Lighting conditions must always be determined in time to plan additional facilities if necessary. Keeping the puck in view of the audience requires excellent panning and well planned orientation of cameras for most effective shots. Due to the rapidity of action of ice hockey, real closeups of field action is difficult to attain, most close-up shots occurring at the goals.

Field Polo: Here is a sport we may see make a popular comeback with the expansion of television sports telecasting. The excellent horsemanship and unusual skill involved in polo may prove a natural for TV fans. A wide field of play is involved, the standard polo field being 300 yards (900 feet) long by 160 to 200 feet wide. Since this sport is usually a daytime affair, the Zoomar lens would be highly desirable for such a long, narrow-depth field of play.

Basketball: This game is being televised more and more with growing interest in many states. It is usually played at night with adequate illumination, especially using the Type 5820 image orthicon. Daytime games are played only during tournaments in most instances, in which case the camera operators must be careful not to point the lenses toward side windows unless painted or otherwise darkened.

The basketball court is about 50 feet wide by 90 feet long. The length varies slightly from around 84 feet for high school courts to 90-95 feet for college games. The free-throw line is 15 feet from the end of the court, and the rim of the net is 10 feet high.

These dimensions may be plotted as described previously for baseball diamonds and football fields. Coverage of the various focal length lenses may then be determined from the necessary position of the cameras. One lens should just include the entire court, with sufficient vertical angle to catch high balls lobbed toward the basket from a distance. Another lens should include only the free-throw area and basket, with another lens of sufficient length to catch close-ups of such action as toss-ups, etc. Many stations use only two cameras for this sport with very satisfactory results. Naturally the use of three cameras will lend greater variety and more of a chance for dramatic closeups if the director is experienced enough to warrant them.

CHAPTER

11

Television Transmitter Circuits

Details of transmitter circuits with which the operator is particularly concerned are presented in this chapter. Engineers concerned with new station planning and details of transmitter location, field intensity surveys, etc., should obtain the current FCC Rules and Regulations as follows:

Part 1 — Rules Relating to Practice and Procedure.

Part 3 — Radio Broadcast Services; Subpart E — Rules Governing Television Broadcast Stations Including Engineering Standards.

Part 17 — Rules Concerning the Construction, Marking and Lighting of Antenna Structures.

The above listed information is obtainable from the Superintendent of Documents, Government Printing Office, Washington 25, D. C., at prevailing prices which must be obtained from that source before ordering.

Extractions from Subpart E of Part 3 particularly important to operators of television studios and transmitters are included in the Appendix of this text.

11.1 *Functional Description of Video Stages*

The *visual exciter* of a TV transmitter functions to generate the carrier wave at the assigned frequency, and amplify the power to the designated power output. For the utmost in stability, a crystal controlled oscillator is used. A typical arrangement for bands 2-6 is the crystal oscillator stage, followed by a tripler and two doublers, resulting in a frequency multiplication of 12 ($3 \times 2 \times 2$). For example, band 6 has its video carrier frequency at 83.25 mc. Thus the crystal frequency would be 6.93750 mc ($83.25 \div 12$). The multipliers step-up this oscillator voltage in both frequency and amplitude sufficient to drive the modulated stage. Thus the visual exciter consists of the conventional narrow-band RF circuits, which are tuned to the crystal frequency by adjusting the tank-circuit capacitors (or inductors when inductively tuned) for minimum plate current and maximum grid current to the following stage. All necessary frequency multiplication takes place prior to the stage being amplitude modulated by the video voltage.

The incoming video from the studio is usually fed to a stabilizing amplifier to minimize effects of hum, noise or sync compression. From there it is fed to the video amplifier input of the transmitter. Incorporated in the video amplifier are circuits designed for control of the relative sync-to-video amplitude (sync stretcher) and, in some cases, linearity controls to set the transfer characteristic of the transmitter amplifiers. Transmitter transfer characteristic is the ratio of RF output voltage to video input voltage and is generally linear within 10%. This is desired at the transmitter since the *gamma* at the studio (section 5.5) is adjusted to result in optimum picture quality as observed by the television audience, hence the remaining portion of the overall system should be as linear (gamma = 1) as possible.

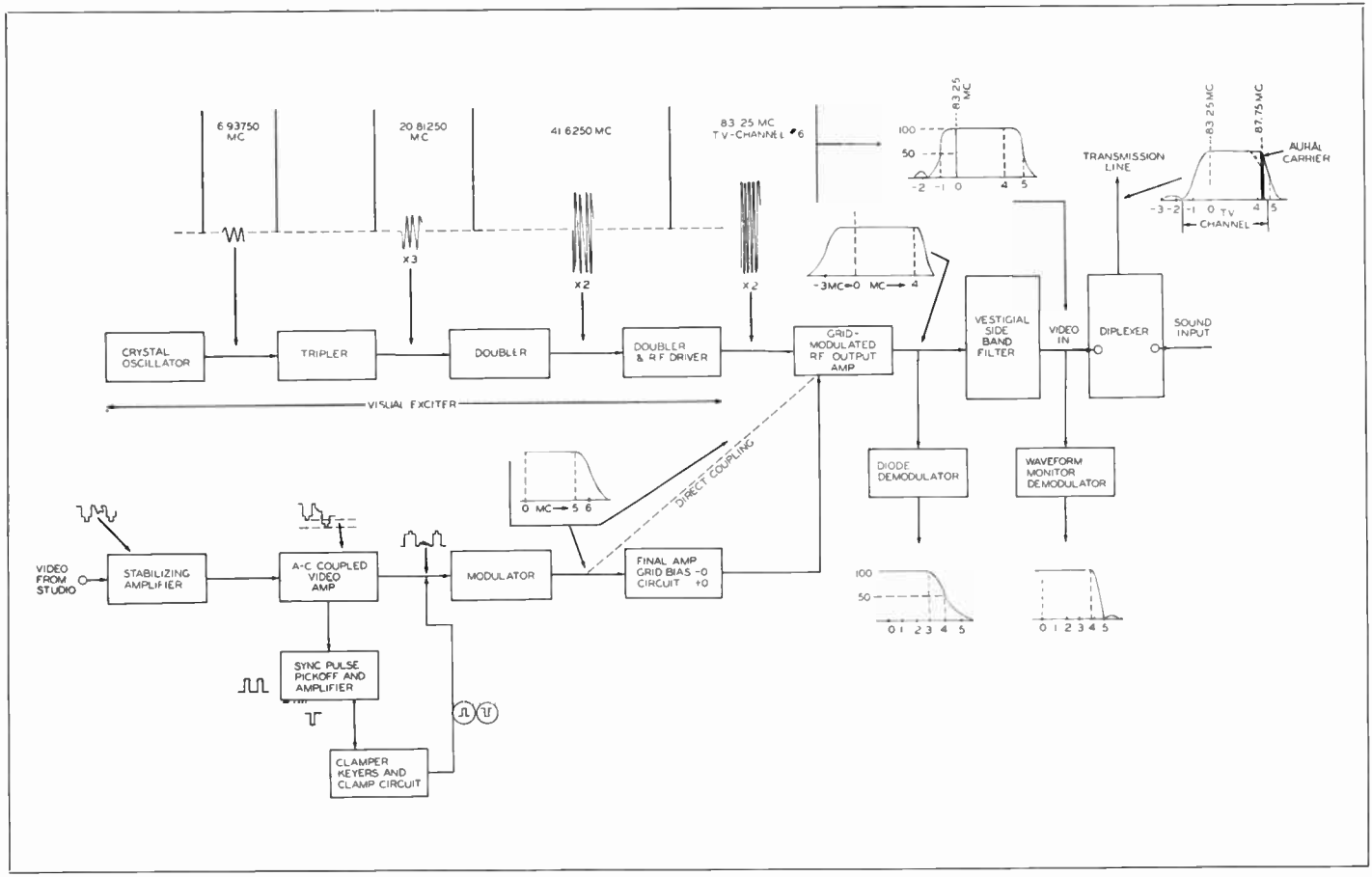

Figure 11.1A. Functional Block Diagram of TV-channel 6 transmitter.

The final video amplifier stage in the transmitter is the video modulator. The DC component is re-inserted at the grid of this stage by clamper circuits, and the modulators are then coupled to the RF stage being modulated by direct coupling to maintain this DC component.

The rf circuits which follow the modulated stage are essentially linear RF amplifiers adjusted for maximum power output *consistent with a flat frequency response throughout the upper sideband.* Proper adjustment of these amplifiers results in partial cancellation of the lower sideband. If low level modulation is used (which may be either grid or plate modulation) a sufficient number of linear amplifiers are used to obtain the desired vestigial sideband response. This action is aided by inserting a notching filter adjusted to 1.25 mc below the video carrier frequency. For high-level modulation (which must be grid-modulation), since modulation takes place in the final amplifier, a vestigial sideband filter must be used. The standard transmission signal from this filter is then fed to either a *bridge diplexer* or *notch diplexer,* into the transmission line to the antenna system.

All of these functions have been covered in some detail in previous sections, and we may now observe the block diagram of Fig. 11.1A for a review of stage-by-stage function. Illustrated in the visual exciter section are typical values for a transmitter working channel 6. The incoming video is shown with DC restoration taking place at the grids of the modulator tubes. The modulator stage of most commercial video transmitters is made flat to 5 megacycles as shown to insure freedom from phase distortion. Observed in the illustration is the partial removal of the lower sideband at the output of the (in this example) final modulated stage.

11.2 Monitoring Arrangements

The operator must become acquainted with the correct interpretation of picture and waveform monitors, since limitations in both transmitter and monitoring devices are very prominent due to the vestigial sideband characteristic of the output waveform. Details of interpretation are included in the next chapter, while the physical arrangement and description of the electrical characteristics are given here.

Two monitoring points with typical band-pass response are shown in Fig. 11.1A; (1) a diode demodulator at the output of the modulated final amplifier, and (2) a vestigial sideband demodulator at the output of the vestigial sideband filter. The reader should observe that the typical output response of the ordinary diode demodulator is reduced to approximately 50% at 4 mc with a gradual roll-off from about 2.75 mc to 5 mc. The picture as observed on a picture monitor driven from this source will inherently be lacking in "sparkle" or detail, from high-frequency roll-off, and should be so interpreted by the operator. This diode curve is due to the partial cancellation of the lower sideband in the final amplifier (section 5.3) since the resultant addition of the upper and lower sidebands in the detector produces the typical curve shown.

Due to this characteristic, the ordinary diode detector cannot be used at any point after the vestigial sideband filter, or, in low-level modulation, at any point past the first modulated stage, since the sharp attenuation of the lower sideband results in a worthless diode response curve for observing picture detail. Therefore, the vestigial sideband monitor shown connected at the output of the filter is a special insensitive-type receiver circuit for picture monitoring having the typical response shown in the illustration. This provides a longer flat-top response, while the sharp cutoff at the high end enables observation of any "ringing" effects in the picture. For waveform monitoring, the output of this demodulator is fed to a "keyer" circuit, thence to an oscilloscope. The purpose of this keyer circuit (variously termed *keyer, vibrator* or *chopper)* is to intermittently short-circuit the output of the

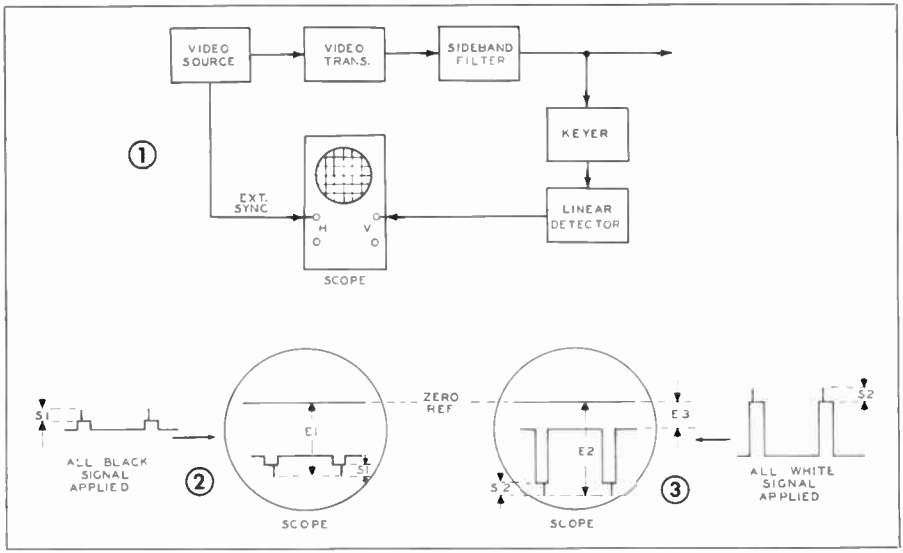

Figure 11.2A.

detector providing an additional line on the scope screen representative of zero output. Keep in mind the two components of the standard composite signal; namely the DC and the AC signal axis. The DC axis must be constant, the AC video signal axis being variable depending on light or shade in the original sense. Periodic shorting of the demodulator produces a zero reference level representing no signal. The basic equivalent circuit of such waveform monitoring is shown in Fig. 11.2A, illustrating application to measuring modulation characteristics. If an all-black video signal is fed into the transmitter with a sync pulse height (S) above pedestal level, the resultant scope pattern from such an arrangement is shown in (2). The ratio of the amplitudes S1 to E1 is an expression of the *modulation capability* of the transmitter for an all black signal, with respect to the sync pulses. If now the transmitter is left adjusted as before, and an all-white signal fed to the transmitter input, the scope pattern is as in (3). The ratio of the amplitudes of E3 to E2 is an expression of transmitter modulation capability for an all white signal in respect to the sync pulses. For a properly adjusted transmitter, these ratios should be practically equal. In other words, the variations of blanking and sync levels with changes in picture brightness from black to white must be held to an absolute minimum. The FCC standards limit this variation to within 10% of the amplitude of an all-black picture. Modern transmitters hold well within 5% in going from black to white when functioning properly.

The percent variations under such conditions may be determined as follows:

$$\text{Blanking Level Variations} = \frac{(E2 - S2) - (E1 - S1)}{E1 - S1} \times 100 \text{ percent}$$

$$\text{Sync Level Variations} = \frac{E2 - E1}{E1} \times 100 \text{ percent}$$

The above arrangement also enables the operator to set maximum white level of the video signal to 12½% (±2½%) of the peak sync amplitude. Operational details are discussed in Chapter 12 on Operations.

In actual practice the operator will find the picture and waveform monitors incorporating input selector switches

so that monitoring is accomplished at other points than those shown in Fig. 11.1A. Usually the switches provide for insertion of the monitors at the stabilizing amplifier output, and modulator output. This allows observation of the signal at a sufficient number of points to aid in determining stages where trouble may occur. Some stations include an ordinary receiver monitor as an overall check, in which precautions must be taken not to overload the receiver circuits from the high signal strength prevailing at the transmitter location.

11.3 TV Modulation Circuits

It is well for the operator to realize that as of this date, video transmitters have not reached the stage of development where overall frequency response is equal to studio equipment. Since distortion is additive, studio equipment must be operated with as wide a band as possible to obtain with the equipment used.

The vestigial side-band characteristic in itself is a source of picture distortion which, at best, produces slight leading whites and trailing smears upon transition from white to black regions of the picture, in any present type of demodulation system. Such defects may be made very slight, however, in comparison to the advantage realized in gaining maximum use of the available frequency spectrum. The inherent distortion of vestigial sideband transmission will likely be eliminated in the near future by pre-distortion of phase and amplitude characteristics in portions of the transmitter circuits.

Present RTMA Television Standards, which manufacturers strive to equal or better in practice, allow a 4db attenuation at 4 mc. This is for overall response from transmitter video input to the input of the antenna system. The RTMA tolerances allow for a 2 to 3 db variation throughout the video band. Latest commercial transmitters have bettered these recommendations to some extent, achieving a ±1db variation through the video band, with a —3db response at 4 mc. It has been determined that present system performance is "passable" with as much as 6db attenuation at 4 mc., but that greater attenuation is noticeable to the average viewer.

The overall response up to the video modulator stage in the transmitter is essentially flat to 5mc. From this point on, the response is a compromise in economic design of circuits and the inherent nature of the standard transmission signal. The final clamping point for DC re-insertion is ordinarily found at the grid of the modulator stage. This

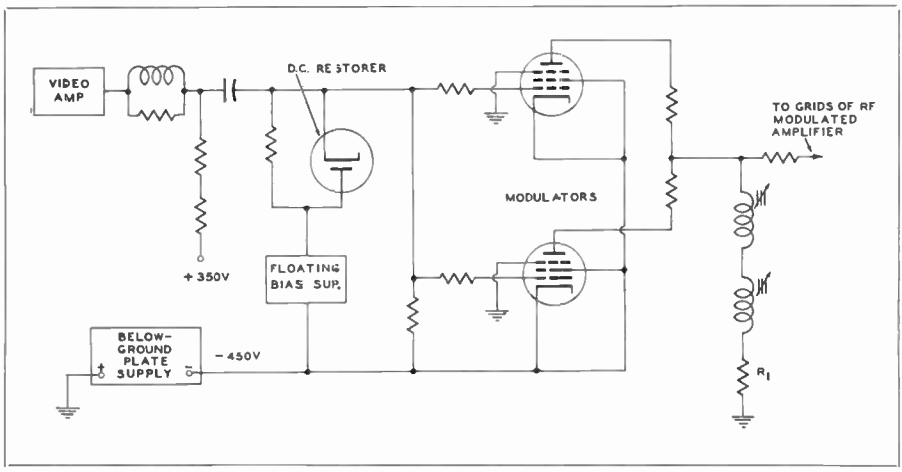

Figure 11.3A. One type of video modulator and DC Restorer.

necessitates some form of direct-coupling between modulator plate and modulated grid in order to maintain the DC component. The reader may wonder why the clamping action is not inserted at the grid of the *modulated* stage rather than the modulator grid, which requires direct-coupling to maintain the direct current. This is the first point of compromise in design. It is realized that the clamper *keying pulses* must have a greater peak-to-peak value than the actual clamping pulses and the video voltage applied to the clamped grid. If this were not true, one of the clamper diodes might be brought into conduction during the video voltage signal rather than the blanking interval. All major manufacturers have decided that any advantage that might be gained by clamping the modulated stage grid (to eliminate direct-coupling arrangements) are offset by the larger power-handling modulator stages required, which would increase initial cost beyond any possible advantage to warrant it. If the grid of the RF modulated stage were AC coupled, approximately 50-60% greater signal amplitude (peak-to-peak) exists at that point than in the case of a DC coupled arrangement.

The form of direct-coupling for modulation in one of the earlier Du Mont transmitters is shown in the simplified diagram of Fig. 11.3A. In this circuit the DC restorer operates in conjunction with a floating bias supply such that an additional biasing potential opposite to that of the bias supply is applied to the modulator grid. This is not a "clamping" circuit but a "leveling" type of DC restoration. The diode refers the peaks (sync tips) of the applied signal to the quiescent bias voltage. Direct coupling to the grids of the modulated stage is obtained as shown by returning the cathodes of the modulator tubes to —450 volts so that the plates may be coupled directly to the modulated amplifier grids. The plate current drop through R_1 provides the bias voltage for the modulated grids.

The method used in the RCA TT-5A transmitter is not a conventional direct-coupled arrangement and is shown by the simplified schematic of Fig. 11.3B. (See description, section 5.3 and schematic Fig. 5.3G.) In this case the constant-resistance network between modulator plate and modulated grids includes the bias supply for the power amplifier (modulated) grids. In this way the internal resistance of the power supply becomes an integral part of the resistance network, and is used to an advantage rather than a hindrance. Video currents flowing in grid, screen and plate circuits of amplifiers will produce a corresponding voltage drop across the internal impedance of the associated power supplies. This drop obviously affects the DC potential applied to the electrodes, and will result in picture distortion. Thus power supplies for video circuits are designed with extremely low internal impedances, and it is found that many tubes are paralleled in regulator circuits not only for current-handling capabilities but to decrease to an absolute minimum this impedance value. The screen-voltage of RF stages are also usually regulated by electronic means.

The method of modulation used in the General Electric TT-10-A transmitter is described in the complete presentation, section 11.6.

It is recalled that to meet the standard transmission characteristics of *negative modulation*, an *increase* in light content of the signal must cause a *decrease* in amplitude of carrier wave. This requires that the grid modulated radio-frequency stage receive a *black positive* video signal as indicated in (1) of Fig. 11.3C. As the signal swings in the black (positive) direction, grid bias is decreased and plate current increased, resulting in a greater amplitude of signal carrier envelope. As the video swings in the negative (white) direction, grid bias is increased, decreasing plate current and less amplitude of RF carrier envelope results. Thus the signal input to the *modulator* grids must always be black negative as shown. In (2) is illustrated a typical transfer characteristic of the modulator

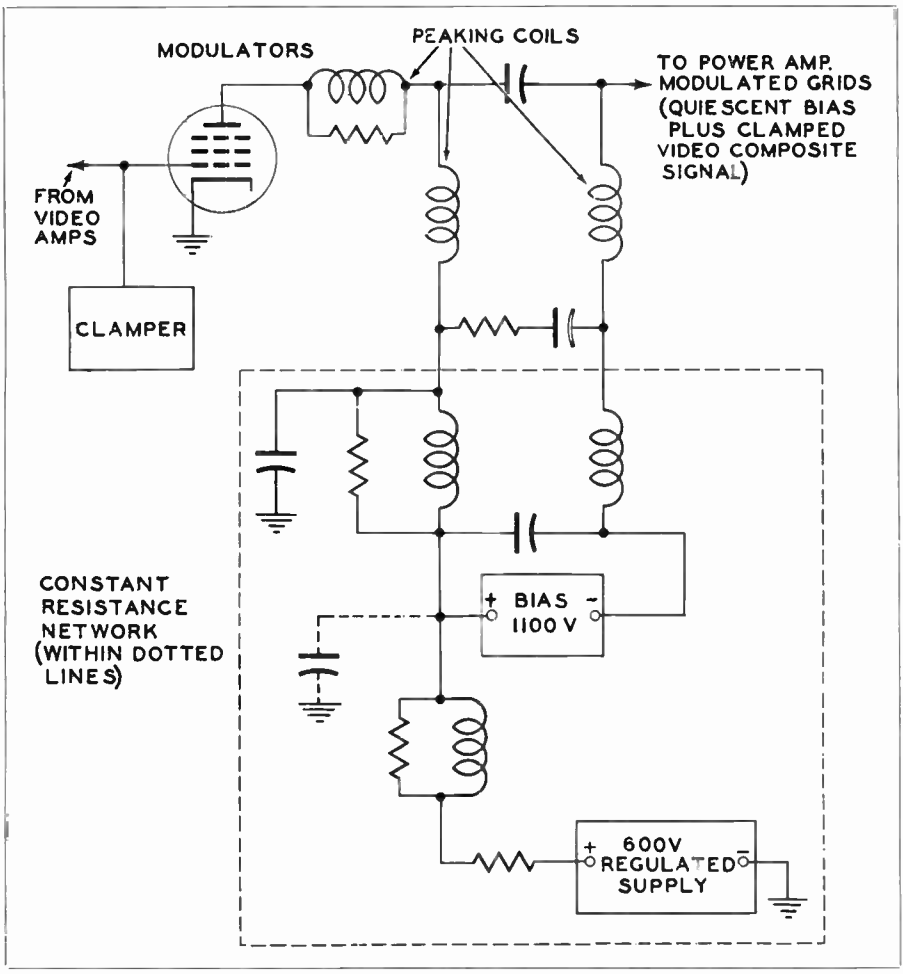

Figure 11.3B. Simplified Schematic of RCA TT-5A Video Modulator.

stage. As the signal swings in the positive (white) direction, grid bias is reduced and modulator plate current increases. Increasing the plate current causes greater voltage drop across the modulator load, reducing the voltage existent at the coupled point, resulting in the familiar phase reversal of 180 degrees between plate voltage and grid voltage swings. As the grid voltage increased in the positive direction, the plate voltage coupled to the modulated grids goes in the negative direction. Also shown in (2) is the change in DC restoration potential accomplished by the clamper or restorer stage so that pedestal and sync levels result at the same modulator plate current point in either all-black or all-white signal conditions.

Illustrated in (3) of Fig. 11.3C is the transfer characteristic of the modulated RF stage. A grid-modulated stage is operated class B as are any following linear amplifiers, being biased close to the cut-off point with no excitation. For negative modulation, when no signal is received, the radio-frequency excitation from the driver stage is sufficient to drive the plate current to its

maximum value as indicated at that point in (3). For an all-white picture signal, the bias on the grids is maximum, and plate current is reduced except during the blanking and sync intervals to a point at least 15% of maximum level, and no more than 10%. For an all-black video signal such as application of pedestal and sync only, the bias on the grids is a minimum, resulting in maximum amplitude of carrier envelope.

In practice the quiescent grid bias is adjusted so that video excursion about that point maintains the output waveform over the linear portion of the grid-plate transfer characteristic curve. The reader may now observe the effect of incorrect bias of a grid-modulated stage. Excessive bias will push the operation down around the lower knee of the curve, and result in compression in the signal representing white in the picture information. Insufficient bias will not allow full advantage of the linear portion of the curve without sync compression, since the resulting operation along the upper part of the curve will cause the sync region to fall on the bend of the curve unless amplitude of the applied video is held to an unreasonably low-level.

Adjustment of the modulated stage is more fully discussed in the next section concerning General Tuning Procedures.

From the foregoing analysis of the video modulator action, the importance of proper clamping function may be observed. This DC restoration action at the modulator grids is fundamentally illustrated in (2) of Fig. 11.3C. Fig. 11.3D is presented to emphasize the clamper action. It is recalled from basic theory that the average AC axis for a

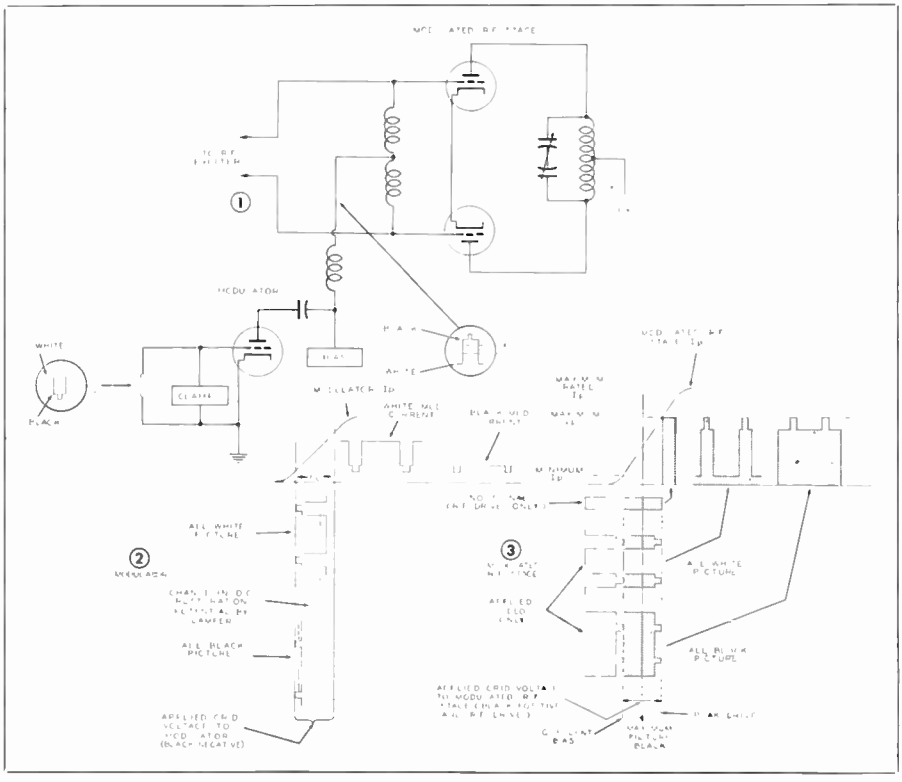

Figure 11.3C.

symetrical waveshape is as shown in (1) and (2) of this Fig. where an equal area of wave occurs above and below the zero axis. In (3) is shown a video signal equivalent to an all-white signal. It is necessary for the clamper or DC restorer circuit to shift the AC axis in the positive direction to hold the pedestal and sync levels at the pre-determined reference point. Compare this to (2) of Fig. 11.3C. An all-black video signal is shown in (4) of Fig. 11.3D, and it is noted that the AC axis must be shifted in the negative direction to hold the peaks at the aforementioned reference level. In this case, the quiescent bias of the modulator grids is shifted in the negative direction. This shifting of the AC axis so that the reference level always occurs at the same point on the grid-voltage, plate-current transfer curve regardless of waveshape is equivalent to restoring the DC signal component. As shown in (5) of Fig. 11.3D, a video signal consisting of an exact balance between black and white would have its AC axis very nearly equal to that of a symmetrical waveshape. The slight difference occurs due to the *setup* of the video maximum black to pedestal level, and the existence of the sync peak level. (Review sections 2.5 and 3.4 for DC restorer and DC insertion theory.)

It is well at this point for the reader to examine in greater detail a characteristic of modulation peculiar to TV alone. As described briefly in section 5.3, in order to maintain the standard transmission signal of 25% sync to 75% video, it is necessary to modulate the transmitter with a greater sync-to-video ratio. Those stations adhering to the recommended signal output at the studio of 1.0 volt video and 0.4 volt sync (sections 3.5, 6.4) have automatically compensated this ratio in comparison to the earlier practice of 1.5 volt video and 0.5 volt sync. Some stations however still adhere to the older practice, and other characteristics of transmission circuits may result in sufficient sync compression that this characteristic is important in the operators' comprehension. Consider a video modulation envelope while transmitting a signal representing a white line on a black background as indicated in Fig. 11.3E. Remember that FCC specifications refer to the total carrier amplitude, that sync tips reach 100% modulation, pedestal level 75% modulation, and white level about 15% modulation. Under this specific condition, the actual modulation considering the entire video envelope is 85%. The resulting video signal relationship required to produce this standard signal is observed to be approximately 29.5% sync and 70.5% video. The actual video signal content should be less than 70.5%, since *setup* of maximum signal black should be held to about 10% less than the pedestal level (section 6.4). The new practice of supplying 1 volt video and 0.4 volt sync supplies approximately 28.6% sync to 71.4% video, and may be seen to very nearly equal the required modulation signal for the TV transmitter, making a "standard" studio signal output very nearly compatible to the modulation requirements of the transmitter. All visual transmitters include some means of control in sync expansion cir-

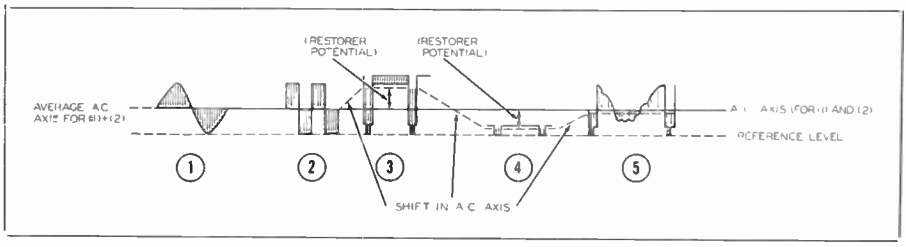

Figure 11.3D.

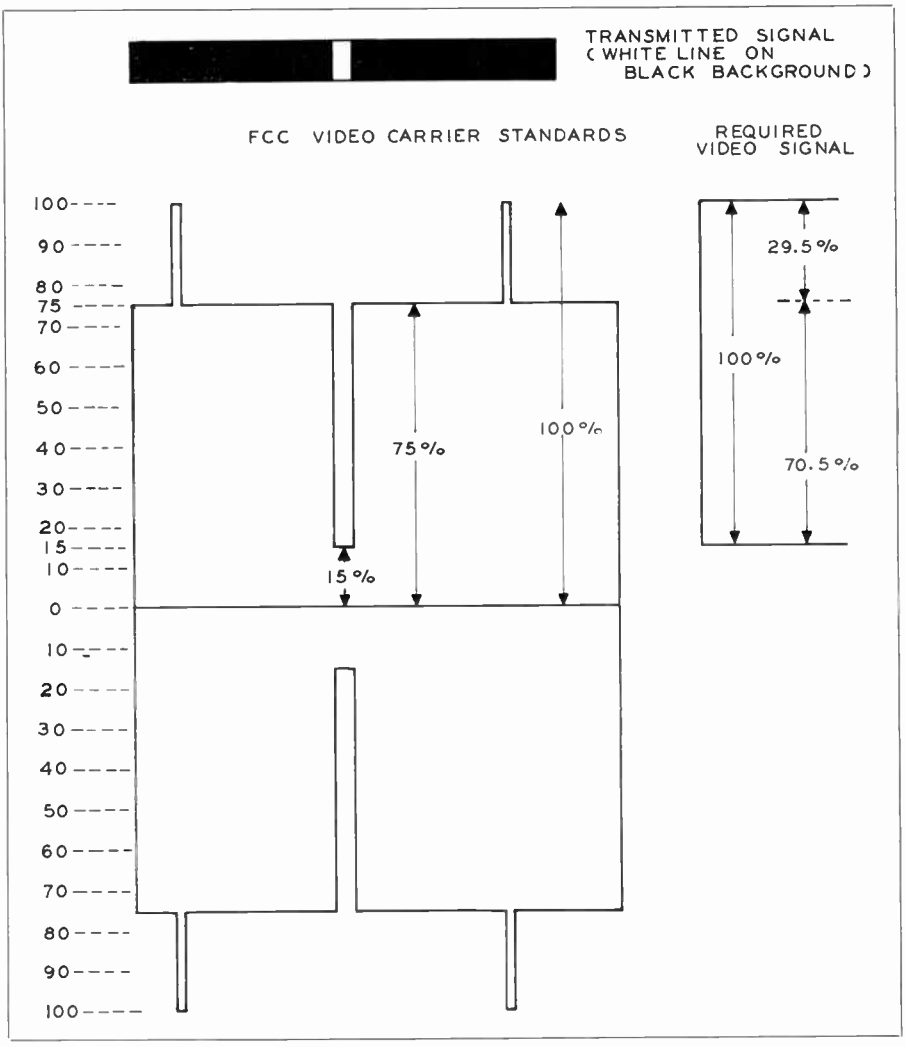

Figure 11.3E.

cuits to exactly proportion sync-to-video ratio for correct modulation setting.

In the process of amplitude modulation by the grid-bias method, a small amount of incidental phase modulation may be introduced. Extra precautions are taken in the initial design of transmitters to minimize this effect, and the operator must also observe precise relationships of adjustment to maintain operation within the allowable phase modulation in the picture signal. The net effect of incidental phase modulation is greater in the vestigial sideband type of carrier than would be the case in double sideband, since, in a double sideband amplitude detector the extra set of sidebands produced would cancel out, whereas they add directly to the AM sideband in a single sideband detector. Observation of the vestigial sideband characteristic (Fig. 1.13B) reveals that lower video frequencies up to 750 KC (0.75 mc) are actually transmitted double-sideband, whereas higher video frequencies from 0.75 mc to the

upper limit are transmitted vestigially. This is one of the limitations on video frequency characteristics which is fixed by transmission standards, and has a direct bearing on the amount of allowable incidental phase modulation in the transmitted signal.

The most important point for the operator to understand is how to determine in a practical manner this "allowable" amount. An intercarrier type receiver in good working order provides a most reliable basis for judgment. In this receiver an intermediate frequency of 4.5 mc is obtained as a beat between video and audio carriers. If the visual carrier contains incidental phase modulation from the picture signal, buzz and noise will result in the sound portion of the receiver from picture modulation. This test must assume that other factors which would also produce noise in an intercarrier receiver, such as overmodulation in the white direction, are not present. In general, it may be understood that picture distortion from phase modulation will be negligible if sound distortion in an intercarrier-type receiver is also negligible from this effect.

Picture-phase modulation might be caused by any condition resulting in an undue amount of RF feedback, such as would occur in stages improperly neutralized.

11.4 *Power Output*

The visual transmitter is never required to develop an average power output greater than the average of the combined pedestal and sync levels. The rating of a video transmitter is given in peak power capability, and the measurement of this output power must be determined under these conditions.

Thus in practice the *average* power of a *standard black signal* is found, and the *peak* value computed from this measurement. The most popular method used commercially to measure actual power output is the *calorimeter method.* The transmitter is worked into a dummy load of the same impedance as the transmission line. This dummy load is immersed in a water column with water pumped at a measured rate over the dummy resistance. Two water-temperature thermometers are used, one on the water-inlet terminal and the other on the water-outlet terminal. In one commercial unit (RCA), the power absorbed in the water (which approximates actual power output of the transmitter within 5%) is found by the relationship:

$$\text{POWER IN KILOWATTS} = 0.263 \times \text{GPM} \times \Delta T$$

where: GPM = water flow in gallons per minute

ΔT = temperature difference between inlet and outlet water in degrees Centigrade.

The transmitter is operated into this calorimeter load for about 15 minutes to obtain equilibrium of water temperature. This is the *average* power output with the transmitter modulated by a standard black signal. This means that the modulation consists only of pedestal and sync voltages, with pedestal level carefully adjusted to 75% of the peak output. To obtain the *peak* power output, the above measured average power level is multiplied by the factor 1.68. This measurement is made at the output of the vestigial sideband filter where used. In low level modulated transmitters, the measurement is made at the output of the final linear amplifier.

The reader should understand how this multiplying factor of 1.68 is obtained. Fig. 11.4A is presented to aid in this understanding. A standard black signal is transmission of sync pulses with the blanking (pedestal) voltage carefully adjusted to 75% of peak sync value. In this standard signal the sync pulse occupies 8% of the line interval, or 0.08H. The pedestal level then occupies the remaining line interval of 92%, or 0.92H. The entire line interval (100% or 1H) is from the leading edge of one H sync pulse to the leading edge of the next H sync pulse.

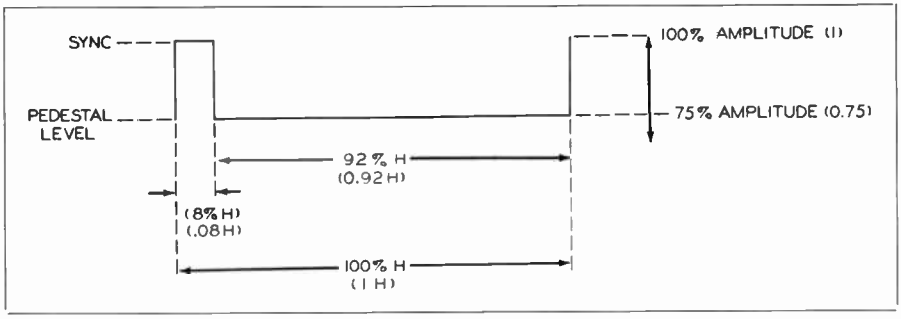

Pulse	Degree of Modulation (Amplitude)	Corresponding Power Level in % of Peak Power Level (I^2R)	Time Interval in % of H	Ratio of Av/Pk Power
Sync.	100%	$(1)^2 \times 100 = 100\%$	$100 \times 0.08H = 8\%$	8%
Pedestal	75%	$(.75)^2 \times 100 = 56\%$	$56 \times 0.92H = 51.5\%$	+51.5%
				59.5%

Since: Ratio of Average Power/Peak Power = 59½% or 0.595
Then: Ratio of Peak Power/Average Power = 1/0.595 = 1.68
Therefore the multiplying factor to obtain peak power output from average power output of a standard black video signal is 1.68.

Figure 11.4A.

These relationships are shown in the diagram. The derivation of average/peak power is also shown, and the conversion of this relationship to peak/average power. Remember that *average power* is related to I^2 or $\frac{E^2}{R}$ where current and voltage are those measured through or across known resistance, in RMS values. The relative *peak power* is then dependent upon the nature or shape of the power curve.

Following the data given with the drawing, it is noted that the peak sync pulse is the level at which 100% modulation of the carrier wave occurs, and therefore the corresponding power level *in % of peak power level* is the same, or 100%. The duration of this power level in terms of the line interval (H) is 0.08H or 8%. The pedestal level is that level which produces 75% amplitude modulation of the carrier wave. Since the corresponding power level for any given value of resistance depends upon the square of the current or voltage, the average power level in this case is 56% as shown. Since this power level occurs over 92% of the line interval (0.92H), the pedestal power interval is 51.5%. The total of the time intervals of the respective powers (8%) + (51.5%) is then the ratio of the Average/Peak powers.

Therefore to find the ratio of the Peak/Average powers, the reciprocal of the above is used. As shown, this amounts to 1.68.

It may also be computed that the ratio of the RMS voltage or current of the carrier wave during H sync interval to the RMS voltage or current of the carrier wave during the entire H time is equal to 1.295. This factor squared gives:

$$(1.295)^2 = 1.68$$

To meet the requirements of the FCC Rules & Regulations, all installations

must include some indicating device which shows peak power output of the video transmitter during the operating schedule. This meter is initially calibrated by transmitting a known power as determined, for example, by the above described method. The indicator must then be checked at periodic intervals by re-running the dummy-load power computation, and comparing the peak-indicator meter reading with the computed power output.

The peak power indicator usually takes the form of a *reflectometer*. This is a combination of a "directional coupling" device and a peak-reading diode detector circuit. (See section 5.3 and Fig. 5.3G for basic description and diagram.) This indicator provides a constant check on power output as well as showing condition of transmission line and antenna system as they affect standing waves on the line.

11.5 General Tuning Procedures

The tuning of television transmitters is not unduly complex, but the procedures are necessarily more involved and interdependent than is the case of the conventional audio transmitter. It is necessary for the AM operator to gear his thinking to the requirements of circuit function in relation to the nature of the "standard television signal."

For the basic adjustment of a grid-modulated RF stage, (3) of Fig. 11.3C should be observed during the following discussion. This stage operates essentially as a class B amplifier, with the fixed bias such that the tubes are operated near plate-current cutoff. The general procedure is as follows:

1. The modulated RF amplifier grid bias is adjusted without RF drive or video signal to a point allowing only a small plate current to flow; in other words, very near to the cutoff value. This fixes the lowest point of operation along the most linear portion of the transfer curve, shown as "minimum plate current" in (3), Fig. 11.3C. This is the quiescent or static bias of the stage and varies with the tube and circuit conditions of the particular transmitter. Normal plate voltage and loading must be used on the stage during this adjustment.

2. The RF drive (no video) is increased sufficiently to drive the plate current to the upper knee of the transfer curve, marked "maximum plate current." Note that the indicated "minimum" and "maximum" values are the operating value of plate current. In practice, the maximum operating value is approximately one-half the maximum *rated* plate current of the particular tubes used in the modulated RF stage. In general, therefore, the RF drive is increased to a value about one-half that required to drive the tubes to the *maximum rated* plate current.

3. A maximum white video signal of approximately 30% sync, 70% video, is applied to the modulators. The video gain is advanced until the modulation envelope shows white modulation between 15% and 10%. The monitoring device may be either a diode pickup and scope with chopper reference line, or a special RF waveform analyzer using a calibrated screen. (Detailed Chapter 12.) It is noted from (3), Fig. 11.3C, that application of a white signal produces negative modulation from the condition of the maximum carrier amplitude under no-signal conditions. This is to say that with proper RF drive applied, and *no* video signal, the peak output of the transmitter prevails. It is noted from the drawing that when video is applied, the adjustment is such that the sync peaks of the *applied* video signal fall at the quiescent bias (minimum operating plate current) of the tube. Now considering sync tips only, the carrier amplitude is the same as with RF drive only, with no signal, or maximum value. At the blanking (pedestal) level, the bias is increased, and plate current decreases by that amount. The large negative swing of the picture voltage then increases the bias still further, and the carrier amplitude decreases accordingly to the minimum plate current value. The same reason-

ing is applied to the all-black signal (or sync and blanking levels only) and it is observed that the plate current (hence carrier amplitude) is reduced to the pedestal level over the 92% of the line interval. The sync tips represent 100% modulation, the blanking level 75% modulation, and maximum white level is 10 to 15% modulation.

The above has considered adjustment of the modulated stage, and it has been assumed that the exciter supplying the drive to this stage has been properly tuned by conventional methods. The remaining tuning procedures concern the output circuit of the modulated stage, and any following linear RF amplifiers where this method is used. If the above modulation adjustment is carried out before adjustment of following linear amplifiers, the monitor pickup used must be from the modulated stage.

The TV operator is concerned with circuits in which both plate and grid circuits are tuned, commonly referred to as *double-tuned* circuits in an *overcoupled* condition to achieve adequate power output with satisfactory bandwidth. Since tuning procedures of such circuits are unconventional, a brief review from fundamental theory is in order.

Fig. 11.5A illustrates a double-tuned circuit arrangement and response curves corresponding to several factors or conditions. When the coefficient of coupling is small, the secondary response is small for a constant current AC in the primary, and has the typical shape of a single peak resonance curve. As the coupling is increased (tightened), the secondary response rises in amplitude, and broadens in response. If this process is continued until the resistance the secondary couples back into the primary is just equal to the primary resistance at resonance, the point of *critical coupling* is reached. At this point the secondary response

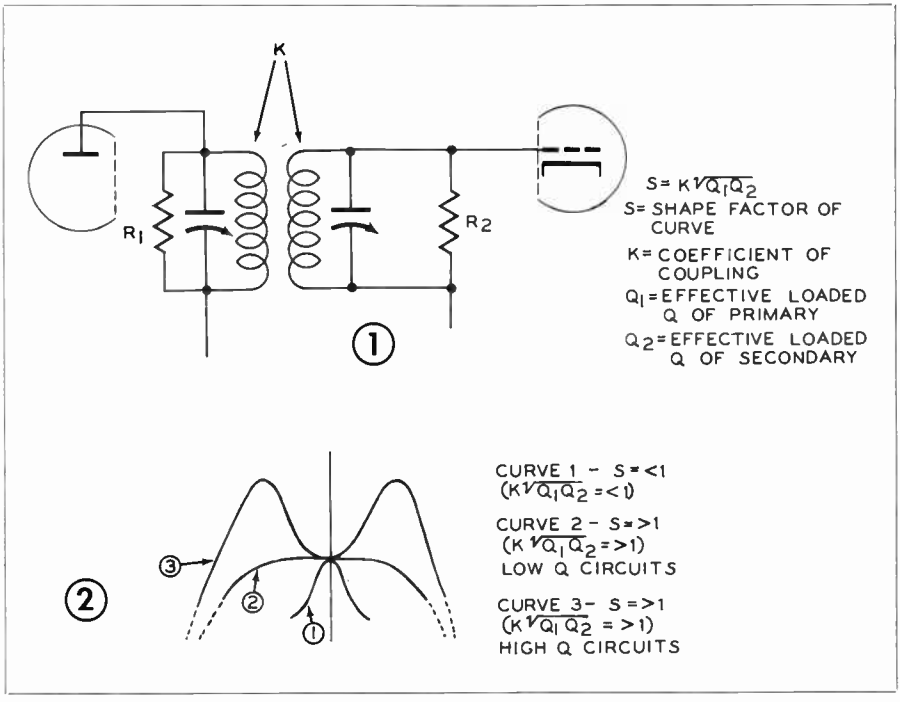

Figure 11.5A.

attains its maximum possible amplitude. The shape factor (S) of this curve is still less than 1, even with high Q circuits, as indicated in the diagram (Curve 1). The primary or secondary "Q" is the ratio of the energy stored in that circuit to the energy dissipated per cycle (X/R). The average transmitter operator is familiar with the circuit thus far, and he tunes primary and secondary for maximum secondary response, indicating resonance and optimum loading conditions simultaneously.

From this point on, conditions differ from conventional AM circuit action. When the coupling is tightened beyond the critical value, the secondary response begins to show double humps. When this occurs, the shape factor becomes greater than 1, even with low Q circuits. For a given circuit, the peaks of the humps become greater in amplitude and farther apart as the coupling is increased. Thus the peaks may become quite pronounced with a decided valley between them as shown by curve 3 of the diagram. This is typical of a tightly over-coupled circuit with high circuit Q, and a resulting shape factor (S) much greater than 1.

In order to obtain the more desirable curve as shown by (2) of the response curves, we may examine the possibilities afforded the operator. The shape factor depends upon the coupling and circuit Q. The Q in itself will depend upon loading of the circuit. The operator has no control over the "designed Q," therefore he has two possibilites: (1) amount of coupling and (2) loading.

In practice, circuit constants have been designed so that the shape of the response curve will be correct when the circuit is adjusted for optimum bandpass characteristics. For a given value of coupling in a given over-coupled circuit, *increasing* the secondary load (by *decreasing* the effective value of R2 in (1) of Fig. 11.5A) will decrease the amplitude of the humps with a more flat topped response curve as in curve (2).

The primary and secondary of such a circuit must both be tuned *on resonance*. This resonant frequency need not be the actual carrier frequency; indeed this practice is seldom used in video transmitters. The reason is that the tuned RF circuits are so adjusted that the lower sideband of the video passband are attenuated by the required amount. Thus the carrier frequency is actually lower than the resonant frequency by about 1.5 mc as illustrated in Fig. 11.5B. This is accomplished in practice by adjusting the resonant frequency of the tuned circuits of the modulated stage and RF linear amplifier to a higher value than the carrier frequency.

Since primary and secondary of the double-tuned overcoupled circuit must be tuned to resonance, the operator cannot follow the conventional practice of tuning for maximum power output as in AM circuits or broad-band single-tuned circuits. What actually happens when this is attempted is that the primary and secondary are tuned to different frequencies in order to find a load impedance favorable to maximum power output. The result is shown by

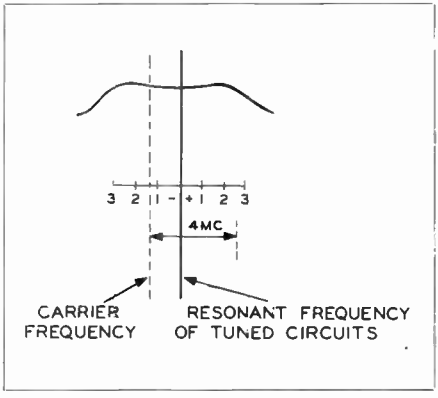

Figure 11.5B. The videa carrier is placed approximately 1.5 mc lower than the resonant frequency of the linear amplifier tuned circuits by resonating the tuned circuits 1.5 mc higher than the carrier frequency. The "ideal" flat tap is then +4 mc and —0.5 mc from the carrier frequency, giving the required videa bandpass with proper attenuation of the lower sideband.

Fig. 11.5C. When the primary and secondary are tuned to the *same* frequency, resulting in a symmetrical band-pass characteristic, the input impedance at the center of the band (which determines the maximum power the tube can develope), is at a *minimum* value.

Therefore, if tuning strictly by the "meter method" without the aid of an oscilloscope, the operator performs adjustments with the above characteristic in mind of obtaining minimum load impedance for a given value of coupling. When minimum load impedance on the driver is obtained, a minimum peak in grid current of the driven stage will occur upon rocking the primary capacitor back and forth through resonance. Upon initial adjustment, the plate voltage is lowered on the driven stage, and the primary tuning adjustment rocked through resonance as indicated by the grid current meter in the driven stage. If this stage uses a tetrode tube, more accurate indication may be observed by watching the screen-current meter for the peak in screen current. When primary resonance is found by this procedure, the secondary is adjusted so that a minimum peak in grid or screen current occurs as the primary is varied back and forth through resonance. This assures that both primary and secondary are tuned to the same frequency.

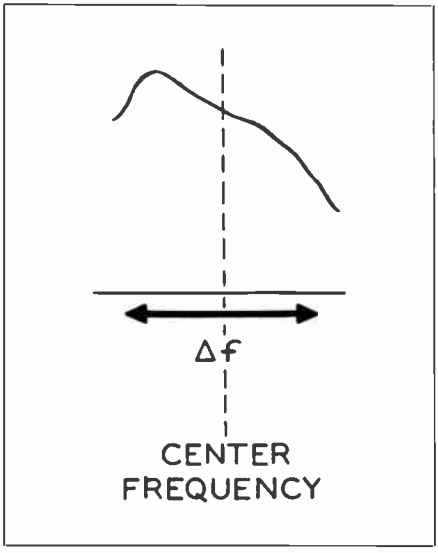

Figure 11.5C. Resulting amplitude — frequency response curve of over-coupled double-tuned circuit when primary and secondary are tuned to different frequencies.

In stages using variable coupling, it may occur that the driver load impedance from the above procedure is too low. This will be revealed by excessive plate current compared to the effective power output, indicating high internal anode power dissipation. Under these conditions the bandwidth is usually greater than required. The situation is remedied by using *reduced coupling* and repeating the above procedure. This increases the load impedance, decreasing the tube loading conditions, hence reducing the plate current for a given power output.

Thus the reader should note that under some conditions, increased driving power may result from *reducing* the coupling rather than increasing the coupling as is necessary in conventional AM transmitters. This is a characteristic of double-tuned, overcoupled RF transformers. It should be borne in mind that when a single-tuned broadband circuit is used between stages, the circuit is tuned in the conventional way for maximum grid current in the driven stage.

Coupling adjustments on ordinary link-coupled circuits are obvious; moving the links farther apart decreases the coupling, and *vice-verse*. Adjustment of circuits using resonant lines are not so obvious. In general, it should be understood that moving the connection on the resonant line toward the open end results in *increased loading*. For example, consider the common case of a driver stage coupled to the following stage operating grounded grid by tapping onto the cathode resonant line. The driver stage would be loaded more heavily by adjusting the point of cathode connection toward the open end of the line, and would be *decreased* by

moving this connection toward the cathode terminal, of the driven amplifier. In the instance of loading a final stage to the transmission line, the final amplifier is loaded more heavily by moving the transmission line connections toward the open end of the final plate resonant line output circuit.

For a properly tuned overcoupled circuit, bandwidth (separation between humps in the response curve) is mostly under the influence of degree of coupling, while flatness across the top of the response curve is mostly affected by loading.

After the circuit has been properly tuned, the entire resonant frequency may be shifted the required amount above the carrier frequency only by using a sweep generator, markers and scope. The next section details this adjustment for a specific transmitter.

11.6 *General Electric Type TT-10-A Transmitter*

For the purpose of acquainting the reader with the theory and tuning procedure of a commercial transmitter, a somewhat detailed analysis of the GE TT-10-A transmitter is presented in this section.* Due to space limitations and the impracticability of presenting very large complete schematics of the entire circuitry, the material is necessarily incomplete as compared to the actual instruction manuals of the manufacturer. These instruction manuals are very detailed and leave little question in the minds of the engineers with proper technical background. The material in this section has been especially

*Based upon material supplied through courtesy General Electric.

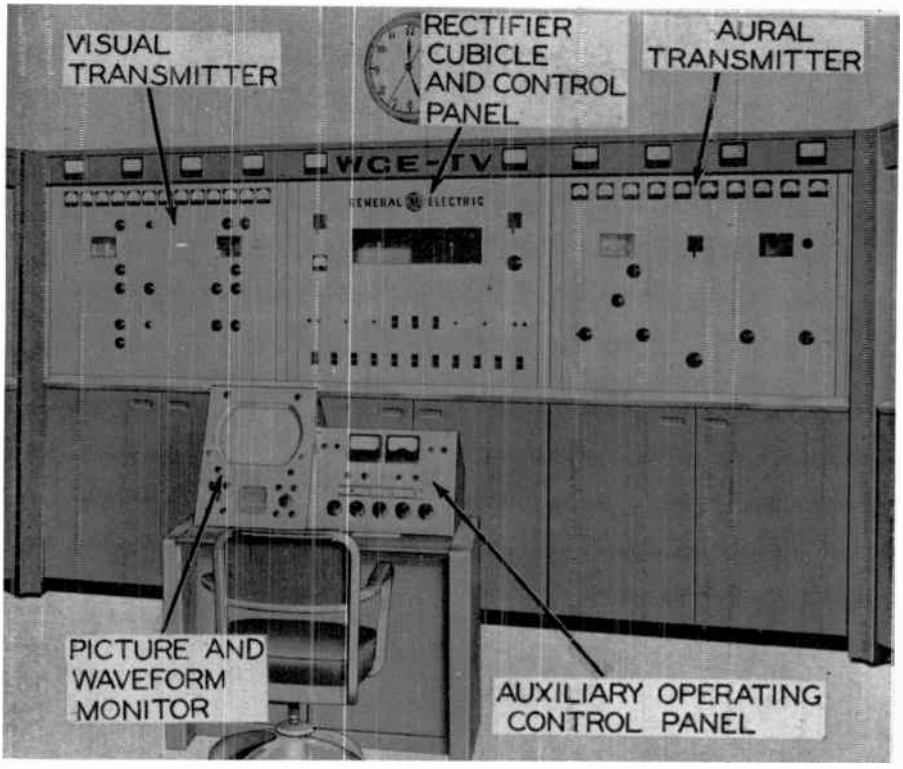

Figure 11.6A. The 5 kw VHF Low Channel Transmitter Exciter, type TT-10-A. Courtesy G. E.

prepared and arranged to familiarize the student and newcomer with practical transmitter adjustments as recommended by the designers of the actual equipment.

It should be noted from the descriptions and schematics that each stage is designated not only by type of tube such as 6AC7, or 6AH6, etc., but also by symbols such as 1V52, 1XV52, 1V57, 1XV57, etc. The symbol V stands for vacuum tube, while the symbol X stands for the socket of that particular tube. In this way, the description referring to a particular stage are simplified by simply designating 1V or 1XV and correlating the text with the schematics showing these symbols, thus avoiding such references as (for example) "the second type 8008 rectifier from the left looking from the front." All terminal boards have numbers such as 1TB10, 2TB12, etc. The symbol TB designates terminal board.

DESCRIPTION

1. CONSTRUCTION

The General Electric Type TT-10-A Transmitter consists of the transmitter proper and a control panel. (Fig. 11.6A).

The Transmitter is housed in three cubicles; Visual, Power and Control, and Aural. The cubicles are designed to be bolted together in a straight line. A wiring trench for intercubicle wiring is located in the floor at the rear. A recessed open kick-cove is provided along the base of the cabinets at the front to prevent scuffing of the finish. Convenience outlets and switches for cabinet interior lighting are located on the back of each cubicle. The top front panels of the cubicles are exposed and contain the frequently used controls, supervisory lights and viewing ports. The lower part of each cubicle is enclosed behind access doors. In the Aural cubicle this space contains the aural modulator and regulated power supply panels. In the center cubicle the space is occupied by two hinged relay panels which open to permit access to the wiring and the blower and drive belt. The lower panel of the Visual cubicle houses the visual modulator, exciter, test panel, sweep generator, and small power supplies. The complete block diagram is illustrated in Fig. 11.6B.

2. AURAL TRANSMITTER

The Aural Transmitter consists of an aural modulator, RF power amplifiers and their associated rectifier and control equipment.

The aural modulator employs a new principle in phase-shift modulators to obtain frequency modulation. Features of this modulator are: direct crystal control of the carrier frequency, use of standard receiving tubes throughout, and alignment without auxiliary apparatus. Output of this unit is approximately 2 watts at the carrier frequency.

Radio-frequency power amplification is accomplished in three stages of Class C amplification using high-gain tetrodes in push-pull circuits.

The rectifiers supplying the plate, screen and bias voltages are housed in the cubicle.

Incoming audio is fed through the transmitter control panel to a Program Amplifier such as a Type BA-2-A located in a rack and from there to the aural modulator in the Transmitter.

3. VISUAL TRANSMITTER

The Visual Transmitter consists of a visual modulator, sweep generator, exciter and RF power amplifier with their associated rectifiers and control circuits.

The video modulator is a five-stage video amplifier using back porch clamp-type DC insertion. Conventional receiving type tubes are used throughout. Controllable sync stretching allows proper operation of the Transmitter over a wide variation of input sync percentage. Adjustable white clipping prevents over-modulation thus reducing the residual noise level in intercarrier-type receivers. A clip-fade circuits removes the video without loss of sync allowing composite switching at the Transmitter.

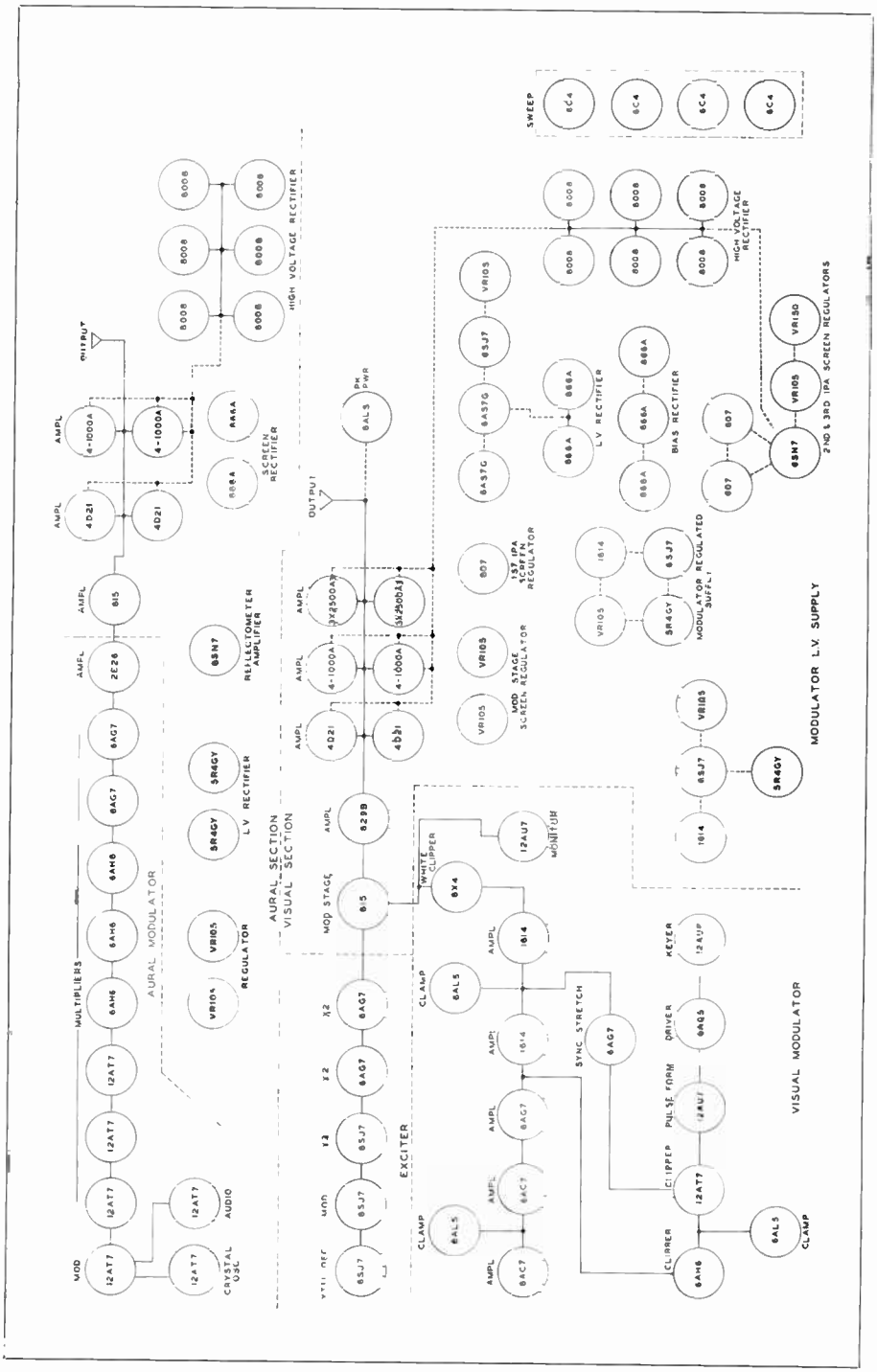

Figure 11.6B. Block Diagram, Type TT-10-A Television Transmitter. Courtesy G. E.

The sweep generator provides a constant voltage swept over a wide frequency range for use in adjusting the bandwidth of the linear wide-band radio-frequency power amplifiers. It also is useful for checking antenna and transmission line performance.

The visual exciter consists of a crystal oscillator, a phase modulator and three stages of multiplication. This unit provides about one watt of power at the carrier frequency. The phase modulator is used to partially compensate for the incidental phase modulation which results when the carrier is amplitude-modulated.

The output of the visual exciter furnishes the carrier-frequency excitation for the modulated stage. The modulated stage is grid modulated by the output of the visual modulator. The output of this stage is about one watt of carrier frequency power amplitude-modulated by the video signal.

Power amplification is accomplished in four wideband class-B stages. Three of the stages are push-pull tetrodes, the final is push-pull ground-grid triodes. Class-B stages are used to maintain the linearity of the modulation. The stages are wideband to pass the sidebands due to the video modulation.

The high-voltage rectifier for the Visual Transmitter is located in the Rectifier and Control cubicle. Other DC voltages are supplied from rectifiers located in the Visual cubicle.

4. CONTROL SYSTEM

The control system has several functions such as starting and stopping the transmitters conveniently, sequencing the starting properly, protecting the equipment from self destruction and protecting station personnel from accidental contact with the high-voltage circuits. The rear access doors have interlocks which remove the primary power from the rectifier transformers when the doors are opened. In addition these doors actuate switches which mechanically ground the high voltage AC and DC buses. The front access doors and relay panels are not interlocked. Quick acting DC overload relays and magnetically operated AC switches protect the equipment against electrical overload. In case of a plate circuit overload two plate reclosures will automatically occur before lock-out. In addition, the Transmitter will recycle for power line failures of less than two seconds.

Both aural and visual control can be accomplished from the front panel of the center cubicle with the more important controls being duplicated at the control panel.

The Aural Transmitter can be operated with the rear doors on the Visual and Rectifier and Control cubicles open; conversely the Visual Transmitter can be operated with the rear door on the Aural Transmitter open. This allows tube replacement and minor servicing to be done on one section while the other is being operated.

5. COOLING SYSTEM

Forced air is used for tube and cubicle cooling, the blower being located in the center cubicle. Air is drawn through a filter in the rear door by the blower which feeds the other two cubicles through a duct. It is exhausted through openings in the top of these two cubicles. Special ducts in each cubicle feed the air to the points requiring cooling such as the 2nd IPA and PA stages in the Aural Transmitter and the 2nd IPA, 3rd IPA and PA stages in the Visual cubicle. Jets of air are also fed to the base of the 8008 rectifiers in the Visual Transmitter to aid in mercury condensation.

An exhaust duct can be used with this Transmitter for the removal of warm air provided an exhaust fan is installed in the duct. The fan should be capable of moving 1500 cfm of air free delivery to prevent any resistance pressure caused by the duct from retarding or unbalancing the exhaust air flow from the cubicles.

The blower is a belt-driven non-overloading type. A two-hp motor drives a number 90 Sirocco fan. Adjustable shives permit changing the speed of the

fan to compensate for 50-cycle or high-altitude operation.

6. POWER FEED

The 208/230-volt three-phase power supply for the equipment should be carried through a circuit breaker or fuse of not over 150 percent of the current rating of the wire used. The interrupting capacity of the breaker should be greater than the short-circuit current capability of the source to which it is connected. When this breaker is open the entire equipment should be dead except for the crystal heater circuit and the utility circuit which are both 115-volt circuits. Incoming power is connected to the main terminal board in the center cubicle.

The aural and visual high-voltage transformers and the blower operate from the supply voltage directly. These two transformers are provided with voltage changing terminals. All other power supplies and all filaments operate from a manually regulated 230-volt line which has a front panel control.

The blower is fed directly from the main line. Circuit breakers provide for opening of the plate circuits in both sections of the Transmitter in case of overloads or faults. The principle power supplies have individual ON-OFF switches.

7. CONTROL PANEL

The control panel is a 19 by 13-15/16 inch panel weighing five pounds and designed to mount in a Type PR-17-A Top Cabinet. It can be mounted in a standard 19-inch rack with a few minor mechanical modifications. A hinged plate on the back of the panel mounts the interconnection receptacles. Video connections are made by coaxial connectors. Power and audio connections are made through Jones plugs. The panel provides for the selection of one of four audio inputs and one of two visual inputs. The control panel provides the necessary controls and monitoring switching for convenient operation of the Transmitter. The control panel is described in detail in Chapter 12 on

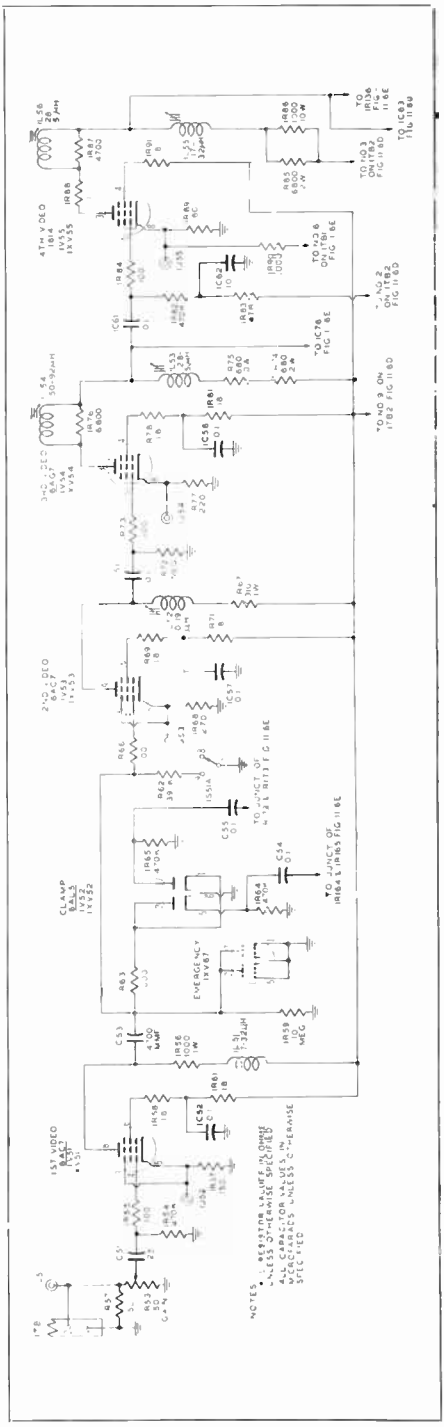

Figure 11.6C. 1st to 4th Video stages.

Operations, as are the functions of the various control circuits.

8. SYMBOLS

Circuit components are identified by a letter preceded and followed by a number. The letter indicates the type of component such as C for capacitor, R for resistor, etc. The prefix number indicates the cubicle in which the component is located (1 is for the Visual cubicle; 2 the Rectifier cubicle; and 3 the Aural cubicle). The suffix number indicates the number of the part in that unit. Terminal board numbers are followed by a dash and the particular terminal number.

All controls on the Transmitter are labeled with their name. All components in the Transmitter where possible are stamped with their symbol number for easy identification and are similarly identified on drawings.

THEORY AND CIRCUIT ANALYSIS-VISUAL TRANSMITTER

1. VISUAL MODULATOR

The visual modulator takes the composite video signal from the studio and amplifies it to sufficient level to grid modulate a GL-815 RF amplifier. Back porch clamp type DC insertion is used. The modulator also provides various points in the following circuits.

A. Description

(1) Input (Fig. 11.6C)

The input terminals of the modulator are 1TB1-1 and 2. The input impedance is 75 ohms unbalanced. The input must be in the range of from 0.8 to 2.2 volts from blanking level to reference white of picture signal. The sync must be at least 15 percent of the picture signal and have a minimum of 3.25 microseconds back porch. 1J51 is available for checking the input voltage.

(2) Ampliers (Fig. 11.6C)

1V51 is a shunt-compensated video amplifier. 1V53 is a shunt compensated video amplifier with DC insertion in its grid circuit. The DC insertion is the back porch clamp-type supplied by the keyed-diode 1V52. 1V54 and 1V55 are series-shunt compensated video amplifiers.

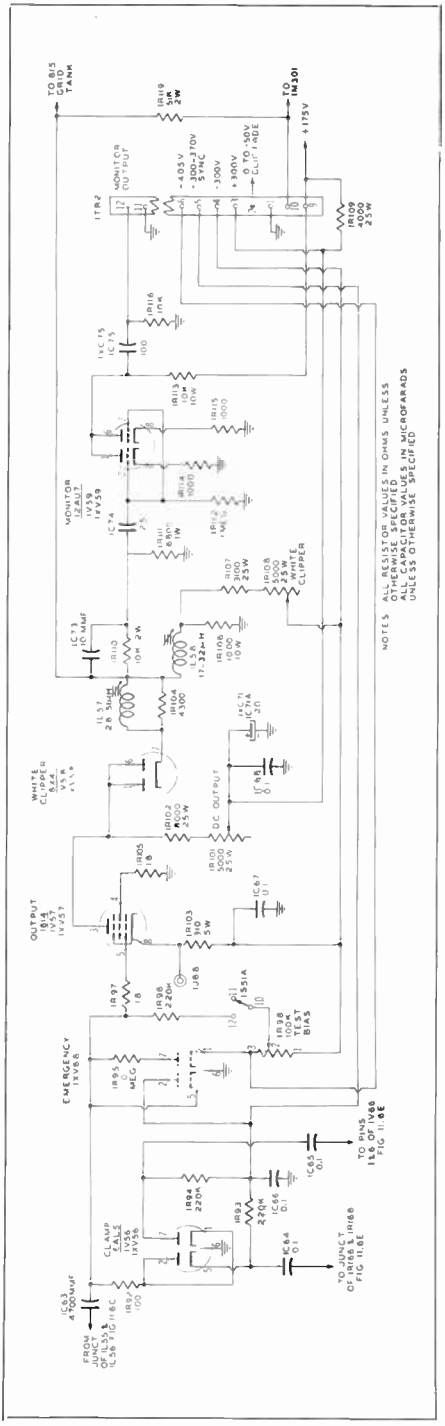

Figure 11.6D.

(3) Output (Fig. 11.6D)

The plate circuit of 1V57 is arranged to supply video modulating voltage to the grids of the push-pull modulated stage which utilizes a GL-815 tube. The cathode of 1V57 is connected to —300 volts through the cathode resistor 1R103. The plate of 1V57 is connected to +300 volts through the plate load 1R102 and the DC OUTPUT control 1R101. Thus, the DC voltage to ground from the junction of 1R102 and the plate of 1V57 is determined by the setting of 1R101 and the current drawn by 1V57. The average current drawn by 1V57 is determined by its grid-to-cathode voltage which is set by the clamp tube 1V56. The operation of the clamp tube 1V56 is determined by the setting of the SYNC stretcher control (Fig. 11.6E). Thus the DC OUTPUT and SYNC stretcher controls are interlocked. Normally, these controls are set so that black level produces —20 volts as read on the DC INSERTION meter. The WHITE CLIP control 1R108 is set so that the DC INSERTION meter reads 35 volts with the diode 1V58 removed. When 1V58 is replaced, the output is free to follow the video variations at the plate of 1V57 as long as the potential does not go further negative than —35 volts. This limits the white excursion of the modulator, and with proper adjustment prevents the Transmitter from being overmodulated.

1V59 takes a sample of the output voltage and delivers it to 1TB2-11 and 12 which will drive a terminated 75-ohm cable feeding a monitor.

(4) Sync and Pulse Shaping (Fig. 11.6E)

A sample of the video voltage (sync positive) that is developed by 1V54 is coupled to the grid of 1V60. The DC grid bias on 1V60 is maintained at a value approximately equal to the peak-to-peak video swing by the grid conduction of 1V60 and the time constant of the network 1R117 and 1C76. The video swing is of such magnitude that severe white clipping results yet the sync pulse and the region around black level are transmitted.

By the method to be described the keyed diode tube 1V61 holds the voltage represented by black level at the grid of 1V62A at a value determined by the setting of the SYNC SEPARATOR control, 1R128. Since the video voltage at the grid of 1V62A is sync negative, the sync in the output of 1V62A is clipped when it passes negative beyond the cutoff grid voltage. In this way the height of the sync pulse (or substantially, the peak-to-peak output voltage, since very little video in the black region is being transmitted at this point) is controlled by the SYNC SEPARATOR control, 1R128.

The output of 1V62A (sync positive) is applied to the grid of the sync stretcher tube 1V63. The grid bias of 1V63 is maintained approximately equal to the peak-to-peak video swing by the grid conduction of 1V63 and the time constant of 1C84-1R134. The video voltage applied to the grid of 1V63 is adjusted by 1R128 SYNC SEPARATOR control so that black level occurs at a voltage very near cutoff for 1V63. The part of the sync pulse which is amplified by 1V63 is that adjacent to black level. 1V63 and the video amplifier 1V55 have a common plate load, thus the sync pulse from 1V63 is added to that already present in the video amplifier. Since the sides of the sync pulse are sloping, no section of the sync pulse other than that adjacent to black level may be added to the original pulse without putting a jog in the rising side of the pulse. SYNC STRETCHER SCREEN control, 1R142, adjusts the screen voltage and the gain of 1V63. Controlling the gain of 1V63 varies the amount of pulse added to the video amplier.

The output of 1V62A is also fed to the grid of 1V62B. The grid bias of 1V62B is maintained at a value approximately equal to the peak-to-peak video signal by the grid conduction of 1V62B and the time constant of 1C86 and 1R143. The video voltage applied to the grid of 1V62B is of such a magnitude as to clip off the black level region. This pulse signal is further amplified and clipped by 1V64A. Thus positive

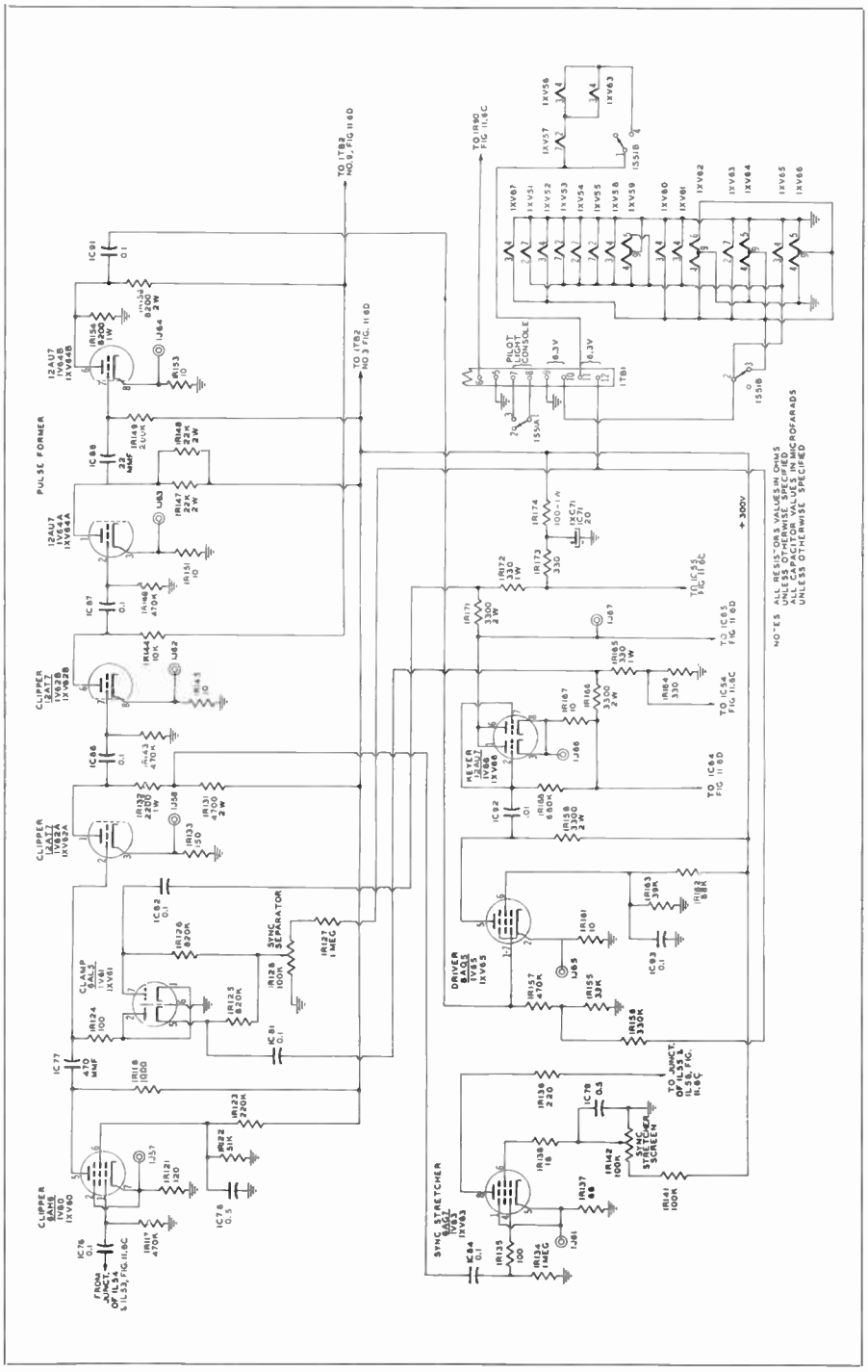

Figure 11.6E. Stretcher and Clamp Pulse-Former circuits.

pulses of large amplitude are produced across the plate resistors 1R147 and 1R148 of 1V64A.

The positive pulses developed by 1V64A are differentiated by the network 1C88-1R149 and applied to the grid of 1V64B. In the absence of pulses the grid of 1V64B is held at zero volts by means of the high resistance 1R149 being returned to the positive supply. The positive spike which results from the differentiation of the rising side of the pulse developed by 1V64A has a very low resistance to ground because of the grid conduction of 1V64B, thereby causing only a small positive excursion at the grid of 1V64B. The negative spike resulting from the differentiation of the falling side of the pulse developed by 1V64A has the high resistance, 1R149, to ground. Thus the only signicant voltage appearing on the grid of 1V64B is a large negative pulse occurring each time the voltage drops from peak-to-black level. This pulse is clipped and amplified in 1V65 and applied to the grid of the keyer tube 1V66. Since the pulse is negative the keyer tube is cut off. This results in pulses of plate and cathode voltage of the type shown in Fig. 11.6F. These pulses are timed to occur (a) during the back porch interval after horizontal pulses, (b) immediately following equalizing pulses, or (c) during each serration of the vertical pulse. The clamping pulses do not appear in the output of the modulator.

(5) Clamps

The operation of the back porch clamp insertion circuits (1V61, 1V52 and 1V56) are explained in conjunction with Fig. 11.6G. This figure

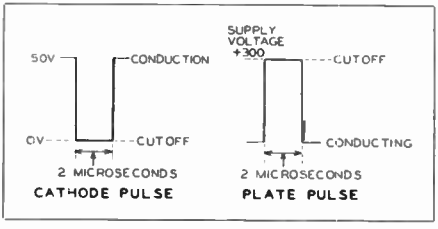

Figure 11.6F.

is a redrawing of the components associated with 1V52 which is the keyed diode providing DC insertion in the grid circuit of the video amplifier 1V53.

The point A on Fig. 11.6G is maintained at +300 volts DC and AC ground by the plate supply for the keyer tube 1V66. Assume the keyer tube to be operating without driving pulses. As shown in the pulses sketches (Fig. 11.6F) the potentials at B and C in Fig. 11.6G will assume the values they have during conduction. These are noted and labeled (1). Since the junction of 1R64 and 1R65, (G1) is grounded, under equilibrium conditions points D and E are also at ground potential. This causes the voltages on 1C55 and 1C54 to be as shown with the suffix (1).

Assume the keyer tube is pulsed to cutoff. The potentials at points B and C become those indicated with the suffix (2). At this instant the voltages around the loop ABEFDCG_2A in a direction to cause conduction by 1V52 are:

	Positive	*Negative*
AB	0	0
BE		280
DC	20	
CG_2	0	0
G_2A	300	
	320	280

or a net voltage of 40 across ED. Therefore, current flows around the loop through the diodes, quickly charging the condensers 1C54 and 1C55 to the values indicated by (2). Note, that assuming the voltage across the diodes in the direction of conduction is equal, the charge on 1C53 quickly adjusts itself so that the grid of the clamped tube assumes a potential half way between points D and E or ground.

With the keying pulse removed from the keyer tube 1V66, the voltages at points B and C resume the voltages indicated by (1). At this instant the voltages around the loop ABEFDCG_2A in a direction to cause conduction by 1V52 are:

	Positive	*Negative*
AB		20
BE		300
DC	0	0
CG_2	0	20
G_2A	300	
	300	340

or a net voltage of 40 volts across ED in the direction opposite to that which would cause conduction. This cuts off the diodes and causes two effects (1) the point F is isolated and free to follow the video voltage driven on it by the coupling capacitor 1C53 and (2) the voltages on 1C54 and 1C55 cannot quickly readjust themselves to conditions (1) because the only paths for their discharge is the long time constant path $ABEG_1G_2A$ and DG_1G_2CD. Thus 1C54 and 1C55 hold substantially the voltage indicated under (2) until the next clamping pulse which brings the diodes into conduction and replenishes the small amount of charge lost by 1C54 and 1C55. The foregoing process

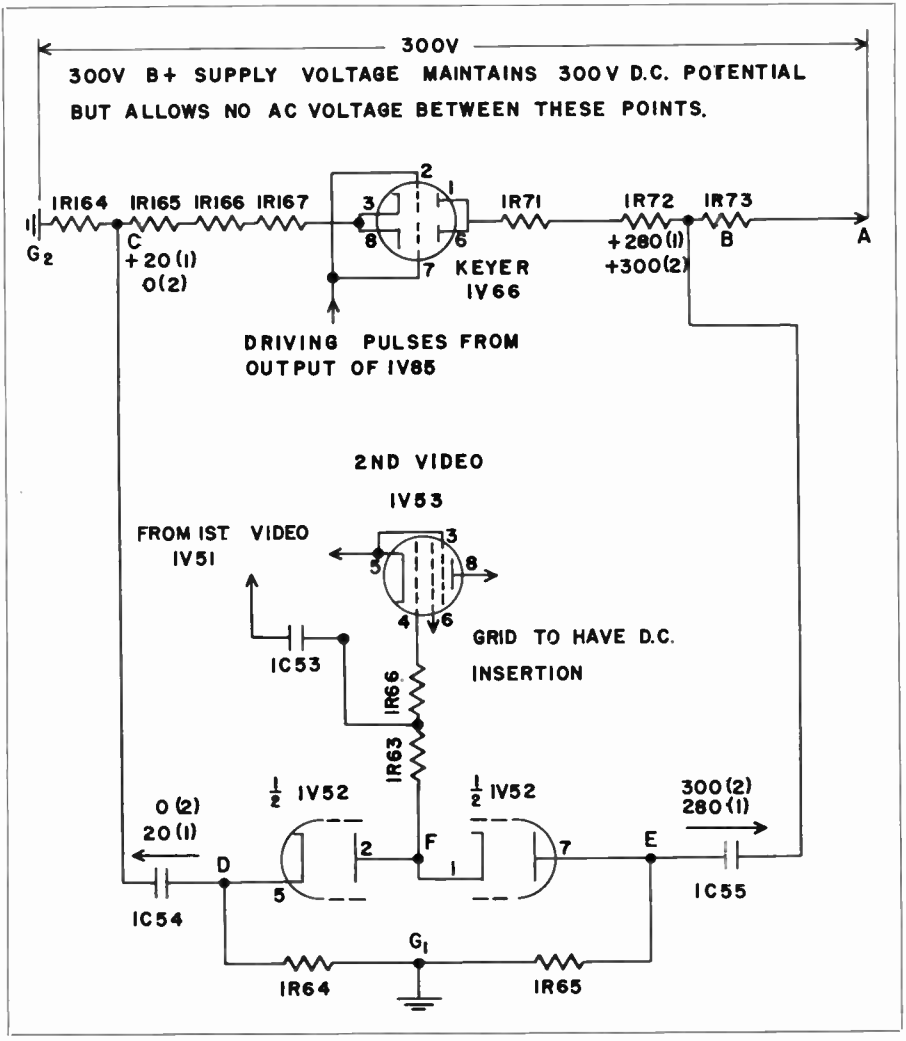

Figure 11.6G. Back parch clamp insertian circuit.

clamps the grid of 1V53 at a definite DC level when the video voltage is at pedestal level but leaves the grid free to follow the video variations at all other times effectively accomplishing back porch clamp-type of DC insertion. It can be shown by an analysis similar to that above, that if the potential of G_1 is held at a fixed DC value with respect to ground, the grid of 1V53 will be clamped at that d-c value. Note also that the keying pulses must have a greater peak-to-peak value than the video voltage applied to the grid to be clamped. If this were not true one or the other of the diodes could be brought into conduction at an improper time. To obtain the different values of clamping pulses needed for the various clamps the plate and cathode resistors of 1V53 are tapped.

(6) Diode Rectification (Fig. 11.6C)

Since improper input signals (too low percentage sync, too short a back porch, too noisy signals, etc.) may cause faulty operation of the clamps. emergency operation has been provided using diode rectification type DC insertion. Moving 1V52 from 1XV52 to 1XV67 disassociates it from the clamp circuits and provides diode rectification type DC insertion for the grid of 1V53. Moving 1V56 from 1XV56 to 1XV68 (Fig. 11.6D) accomplishes the same for the grid of 1V57. One half of the diode 1V56 is used as a switch to connect in a 10 megohm grid resistor for 1V57. This not only removes the 10 megohm resistor from loading the clamps during normal operation but since the diode is returned to a point more negative than the grid, the DC insertion under emergency conditions is improved. No emergency position is provided for 1V61. Since sync is negative at this point, diode section 1 and 7 will conduct on sync peaks and diode section 2 and 5 on white peaks. Thus the voltage between pins 5 and 7 will be equal to the peak-to-peak video and the potential at the junction of the equal resistors 1R125 and 1R126 will be midpoint of the peak-to-peak video. Since the voltage at this junction is determined by the setting of the potentiometer 1R128, the midpoint of the video voltage on the grid of 1V62A is this voltage. During emergency operation when clamp pulses might be faulty, it is desirable to prevent their formation by removing 1V65. It is desirable, however, to maintain the sync separator chain 1V60 through 1V63 to provide sync stretching.

(7) Test

Certain tests required in the FCC Proof of Performance require that the Visual Transmitter be modulated with sine waves ranging in frequency from 200 kc to 4 mc. Since sine waves without sync would render the clamp circuits inoperative, a switch, 1S51 (shown in both 11.6C and 11.6D), is provided to remove the clamp voltage and place a constant DC voltage on the clamped grids of 1V53 and 1V57. The voltage on the grid of the output tube, 1V57, is adjustable by means of the TEST BIAS control 1R98 (Fig. 11.6D).

(8) Clip Fade (Fig. 11.6C)

Adjustable DC grid bias for the 4th video amplifier, 1V55, is obtained through the VISUAL FADE control and the decoupling network 1R83-1C62. (Since the video is sync positive at this point, increasing the negative bias clips off part of the picture portion of the signal.) Extreme counterclockwise rotation of the CLIP FADE control puts sufficient voltage on the grid to completely remove all the picture leaving only the sync. This control allows switching between non-synchronous composites at black level thus minimizing visible roll on receivers.

(9) Sync Stretching

The amount of sync added to the video signal by the sync-stretcher tube 1V63 is always sufficient to drive the output tube 1V57 beyond cutoff. Since the video is sync negative this results in a portion of the sync being clipped. Adjusting the voltage at which the grid of 1V57 is clamped during the back porch interval (by means of the SYNC control) sets the amount of the

sync that is clipped. Thus the ratio of sync to video can be controlled.

B. Alignment

Alignment of the video response of the visual modulator may be accomplished as follows:

(1) Rotate the TEST-CLAMP switch to TEST

(2) Feed a video sweep generator into the modulator through one of the video line inputs on the control panel.

CAUTION: The driving point impedance of the generator must be equal to the line impedance of 75 ohms or the frequency response will not be correct.

(3) plug a video detector probe into pin jack 1J51 (Fig. 11.6C) and check that the sweep input is flat.

(4) Plug the video detector probe into 1J53 and adjust 1L51 until the response is flat. If response cannot be made flat check for a bad tube or faulty circuit component.

(5) After this circuit has been adjusted move the detector to 1J54 and adjust 1L52 to give flat response.

(6) Next move the detector to 1J55 and adjust 1L53 and 1L54 to give a flat response. It will be found that the shunt coil, 1L53, has a major effect on the point of high-frequency cut-off while the series coil, 1L54, has a major effect on the low-and medium frequency flatness.

(7) Move the detector to 1J68 and adjust 1L55 and 1L56 as described previously.

(8) Move the detector to 1J56 and adjust the 1L57 series coil and the 1L58 shunt coil as described previously. Note that any capacity presented by the video detector must be taken into account when aligning 1L57 and 1L58. Also, it is not anticipated that the video response should need frequent checking.

2. SWEEP GENERATOR

(See Fig. 11.6H)

The sweep generator is a device for generating a constant voltage swept over a band of approximately 8 mc centered on the television channel for which the wide-band, class B, linear radio frequency amplifiers of the Visual Transmitter are to be aligned. The sweep voltage is delivered balanced to ground at the SWEEP OUTPUT jacks, 1J401 and 1J402. The output of these jacks can be patched to terminations which are capacity coupled to the plates of the amplifier stages. Thus this voltage drives the circuit to be adjusted. By placing a suitable detector across the output of the stage the frequency response can be seen. This is the standard visual alignment procedure as basically described in Sections 5.3 and 8.3.

A. Description

The sweep generator consists of a 6J6 oscillator 1V401, and a GL-815 wide-band amplifier 1V402, and two marker oscillators 1V403, and 1V404. The frequency of the 6J6 oscillator is varied by the capacitor 1C403 which is driven by the non-synchronous motor 1B401. 1C405 and 1C406 couple the output of the oscillator to the grid of the amplifier. The plate circuit of 1V402 is a double-tuned circuit coupled and loaded to give equal amplification over a large part of the range of frequencies generated by the oscillator. 1C411 tunes the primary inductance 1L402. 1C413, 1C414 and 1C431 tune the secondary inductances 1L403 and 1L404. 1J401 and 1J402 are the output jacks which feed the 75-ohm terminated cables provided with the unit. The ratio between 1C413, 1C431 (these two capacitors are usually set approximately equal) and 1C414 determines the secondary loading.

1L406, 1C417 is a sharply tuned circuit inductively coupled to the output tank. Whenever the sweep passes through the frequency to which the circuit is tuned, a voltage is developed. This is impressed across the crystal detector 1CR401 which rectifies it. The resultant voltage is fed to 1J403 where it is available for synchronizing the trace of an external oscilloscope.

The 6C4 oscillators radiate some of their energy into the 6J6 oscillator

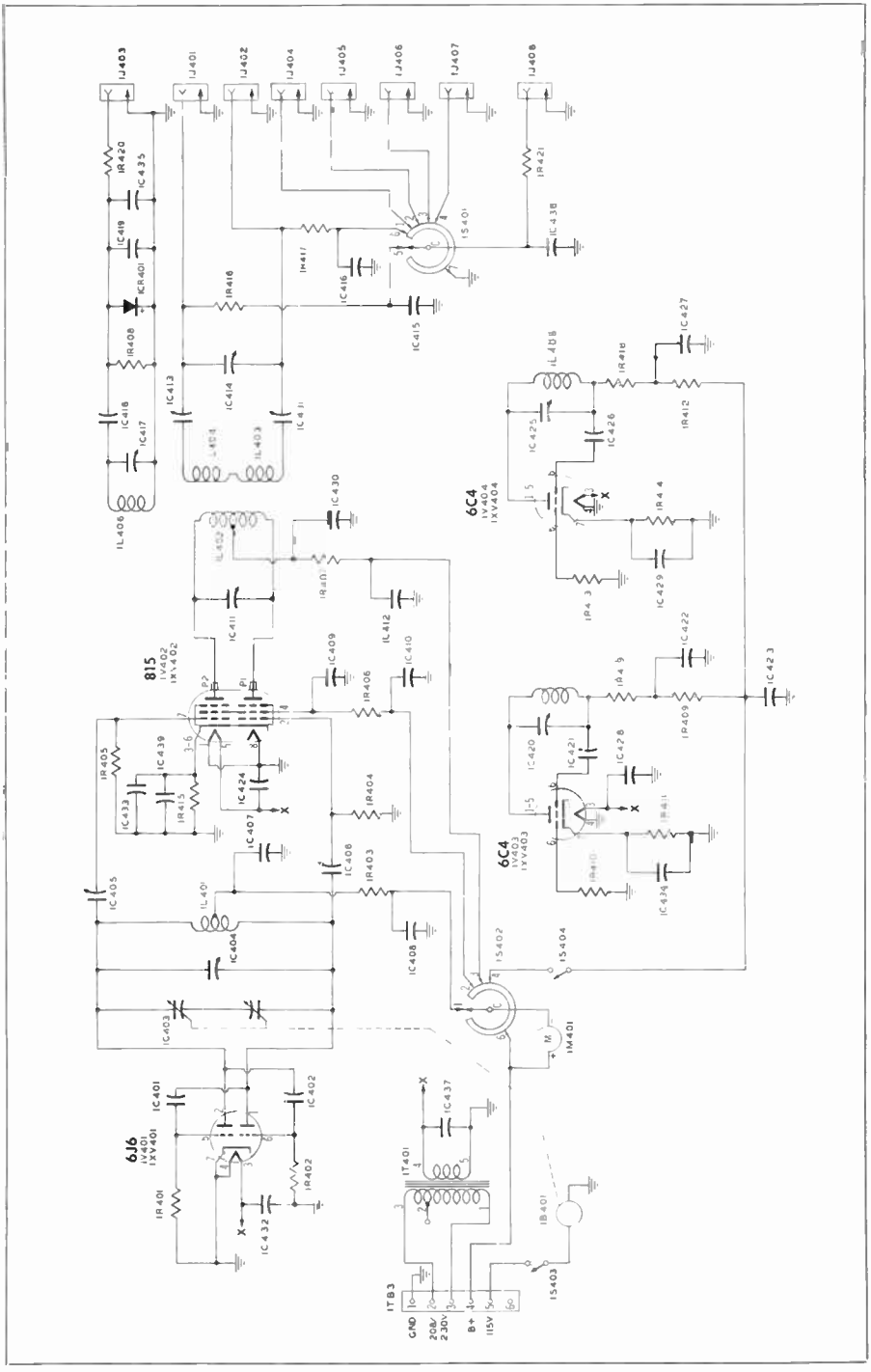

Figure 11.6H. Elementary Diagram, Sweep Generator, Type TT-10-A Television Transmitter.

compartment where it beats with the sweep oscillator frequency at 0.75 mc below and 4 mc above the visual carrier which results in markers appearing at the band extremities.

SCOPE INPUT switch, 1S401, allows the input to the oscilloscope to be switched to either of the two line terminations or to detectors which can be connected to the jacks 1J405 through 1J408 located on the back of the sweep generator.

Switch 1S402 permits monitoring the plate currents of the oscillator, the amplifier, the marker oscillators and the screen current of the amplifier by the meter 1M401.

1T401 is the filament transformer.

B. Alignment

The objective in aligning the sweep generator is to obtain a constant voltage at each of the terminations that is flat within 2 percent over the frequency range of the television channel used. The terminations are located in the various amplifier compartments and are capacity coupled to the plates of the amplifiers. Each termination consists of a 75-ohm resistor shunted by a germanium diode. The diodes rectify a part of the RF voltage delivered to the termination. The resultant DC voltage is proportional to the RF voltage and will appear on the center conductor of the cable. It is taken off through the resistors 1R416 and 1R417 which provide RF isolation for the sweep voltage.

To align the sweep connect a G-E Type ST-2A oscilloscope or equivalent to the SCOPE OUTPUT jack 1J408 and set the switch 1S401 to either of the output terminations. The plexiglass cover described later should be used with the scope. Connect the scope synchronizing input to SCOPE SYNC jack, 1J403. Place the sweep generator in operation by throwing the MOTOR switch 1S403 to ON. Connect the SWEEP OUTPUT to the modulated stage terminations and put the transmitter OPERATE-SWEEP-SET MARK switch on SWEEP. With the sweep of the oscilloscope set for approximately 50 cycles a pattern of four traces can by synchronized, two of which are mirror images. Expand the horizontal sweep so that only one trace occupies most of the scope. When the sweep is properly aligned, this trace should be flat. Any stray pick-up synchronous with the AC power line frequency will pass through the trace at the slip frequency of the motor and be readily identified.

Hold an absorption wavemeter (General Radio Type 758A or equivalent) or a calibrated oscillator (Measurements Corporation Megacycle Meter Model 59 or equivalent) near the output circuit 1L403, 1L404. A nick or marker will show up on the trace whenever the sweep passes through the frequency to which the circuit is set.

Turn the sweep generator marker oscillators on by means of the MARKER SWITCH. With the aid of the absorption wavemeter or calibrated oscillator, tune the oscillators by adjusting the capacitors 1C420 and 1C425 until one marker is 0.75 mc below the visual carrier and the other is 4.0 mc above the visual carrier. Center the markers on the sweep by adjusting the oscillator, center frequency control 1C404. The trace should appear as in Fig. 11.6I.

Increasing the coupling between 1L402, 1L403, and 1L404 separates the humps of the double-coupled circuit. Decreasing the coupling brings the humps together. Coupling adjustment

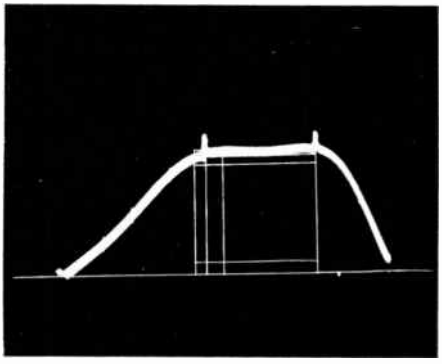

Figure 11.6.I Voltage on termination of properly aligned sweep generator.

can be accomplished by carefully bending the coils 1L403 and 1L404 in a plane parallel to their windings. Small adjustment of the tuning capacitor 1C411 will raise and lower the humps (i.e., rock them up and down). An adjustment of 1C413, 1C414 or 1C431 alone will similarly rock the humps. Increasing the ratio of 1C414 to the sum of 1C413 and 1C431 decreases the loading and increases the amount of dip between the peaks. Conversely, decreasing the ratio decreases the amount of dip. The ratio can be decreased sufficiently to make the circuit single peaked.

To move the bandpass in frequency without changing the trace shape, first raise the peak on the side of the trace toward which the bandpass is to be moved by adjustment of 1C411. Make the response flat again by small equal adjustments of 1C413 and 1C431. Repeat this procedure until the desired movement is accomplished, then adjust 1C413, 1C414 and 1C431 to obtain the proper dip.

The bandpass illustrated in Fig. 11.6I should be the same on both terminations. Balance between the terminations is secured by adjustment of 1C405 and 1C406 and to a lesser degree by the ratio between 1C413 and 1C414.

After the proper bandpass is obtained on the modulated stage terminations, connect the sweep generator to the succeeding stages. The bandpass should be substantially the same for each stage.

C. Typical Meter Readings (1M401)

Oscillator	20 ma
Amplifier Screen	10 ma
Amplifier Plate	60 ma
Markers	10 ma

3. VISUAL EXCITER (See Fig. 11.6J)

A. Description

The visual exciter consists of a crystal oscillator 1V1, a phase modulator, 1V2, a tripler 1V3, and two doublers 1V4 and 1V5. Since the total multiplication is 12 the crystal frequencies are:

Channel	*Crystal Frequency in mc*
2	4.60417
3	5.10417
4	5.60417
5	6.43750
6	6.93750

1Y1 is a temperature controlled crystal Thermocell* unit with a panel light 1I1 labeled XTAL-HEATER to indicate cycling of the Thermocell* heater. 1C1, FREQ ADUST control, permits a small adjustment of the oscillator frequency to bring it into exact agreement with the station monitor.

The screen, control grid and cathode of 1V1 serve as a triode in a Colpitts Oscillator connection. The crystal acts as the tuned circuit. RF ground is established at the screen. Pulses of plate current at the crystal frequency flow in the plate load of the oscillator 1V1. The impedance presented to the fundamental component of frequency of the pulses consists of a parallel combination of the parallel resonant circuit 1C7-1L3 and the anode circuit of 1V2.

1V2 is a reactance tube arranged so that its anode effectively presents a capacitance across the tank circuit 1C7-1L3. The magnitude of this capacitance is controlled by the DC grid voltage of 1V2 which is excited from the visual modulator.

With no voltage applied at 1V1 the tank, 1C7-1L3, is tuned to resonate as described under the Tuning section in the following paragraphs. Varying the voltage on the grid of 1V2 by a modulating voltage fed through 1J1 changes the effective capacitance of the reactance tube and the phase angle of the impedance presented to the current generated by 1V1. Thus a phase-modulated voltage is developed across the tank 1L3-1C7. By introducing video voltage of the proper phase from the visual modulator through the jack 1J1, phase modulation of the video carrier opposite to that incidental to the amplitude modulation of the visual carrier in the modulated stage can be

*Registered U. S. Patent Office.

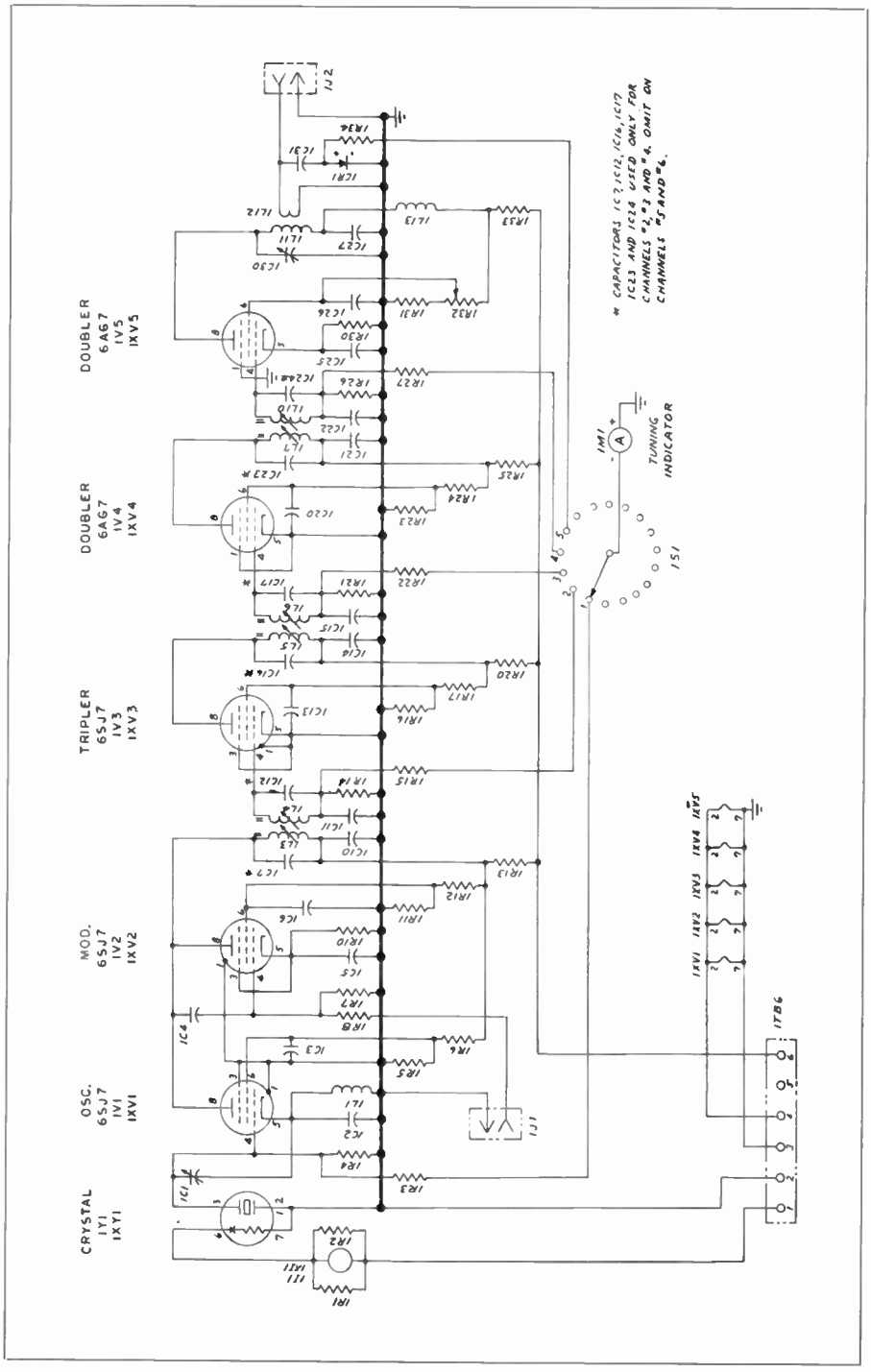

Figure 11.6J. Elementary Diagram, Visual Exciter, Type TT-10-A Television Transmitter.

obtained. Thus the net phase excursion of the visual carrier after modulation can be very small.

The tank circuits 1C7-1L3, 1C12-1L4, 1C16-1L5, 1C17-1L6, 1C23-1L7, and 1C24-1L10 are double-tuned circuits with *less* than critical coupling.

1CR1 rectifies a small amount of the RF output for an indication on the tuning indicator meter 1M1. 1S1 is a rotary selector switch for selecting the grid voltages to be indicated by 1M1.

The output of the exciter is inductively-coupled to the final plate tank and appears at the jack 1J2.

B. Tuning.

Ten to fifteen minutes after energizing the 115-volt system the crystal heater will start cycling (intermittent lighting of the crystal heater lamp) indicating that the Thermocell* envelope is up to operating temperature. The temperature coefficient of the G-E crystal units is so low that in an emergency a cold crystal may be plugged in and still be within frequency tolerance.

With the Transmitter OPERATE-SWEEP-SET MARK switch on OPERATE, set the SELECTOR SWITCH, 1S1, on position 1. A reading of 2 microamperes indicates the oscillator section of 1V1 is functioning.

Set the selector switch on 2 and maximize the meter reading by adjusting the OSC TUNING slugs marked 2. The reading should be 14 microamperes.

Similarly tune the following stages. Note that the selector switch positions correspond to the numbers next to the slugs to be adjusted.

C. Typical Meter Readings

Selector Switch Position	*Meter Reading*
1	2 microamperes
2	14 microamperes
3	30 microamperes
4	46 microamperes
5	6 microamperes

4. MODULATED STAGE (See Fig. 11.6K)

*Registered U. S. Patent Office.

The modulated stage consists of a GL-815 push-pull grid modulated RF amplifier. Carrier frequency power is applied push-pull to the grids from the visual exciter. The grid tank 1L201 is self-resonant at a frequency removed from the television channel under consideration in order to minimize the undesirable effects of feedback through the tube on the flatness of the plate bandpass. Video modulating voltage including the DC component is fed to the grids in parallel through a center tap on the grid tank from the output of the visual modulator. Cross-neutralization is accomplished by adjustment of 1C 223. See the Initial Operation section under OPERATION for neutralization procedure. Plate tuning is controlled by copper slugs in the coils 1L 202 and 1L203. For the tuning procedure, see the Visual Alignment Procedure section later.

AMPLITUDE MODULATION

5. RF DOUBLE-TUNED CIRCUITS (See Figs. 11.6K and 11.6L)

All interstage circuits pass uniformly a band of frequencies from 0.75 mc below the visual carrier to 4.0 mc above the visual carrier. This is accomplished by means of overcoupled, double-tuned circuits. Each circuit is adjusted to give a bandpass of approximately 4.75 mc with a 3 percent dip. Thus the over-all response of the five cascaded circuits of the amplifier have approximately 15 percent dip.

The basic theory of double-tuned networks is presented in the preceding section, however, a few salient points will be reiterated here, as applied to the GE transmitter. The sketch of Fig. 11.6M (1) is a simplified diagram of a typical interstage network.

For any fixed value of loading the width of the frequency band increases as the mutual coupling, M, is increased. All of the interstage circuits are arranged so that the coupling may be varied over a limited range.

For any fixed value of coupling, increasing the loading (by decreasing the

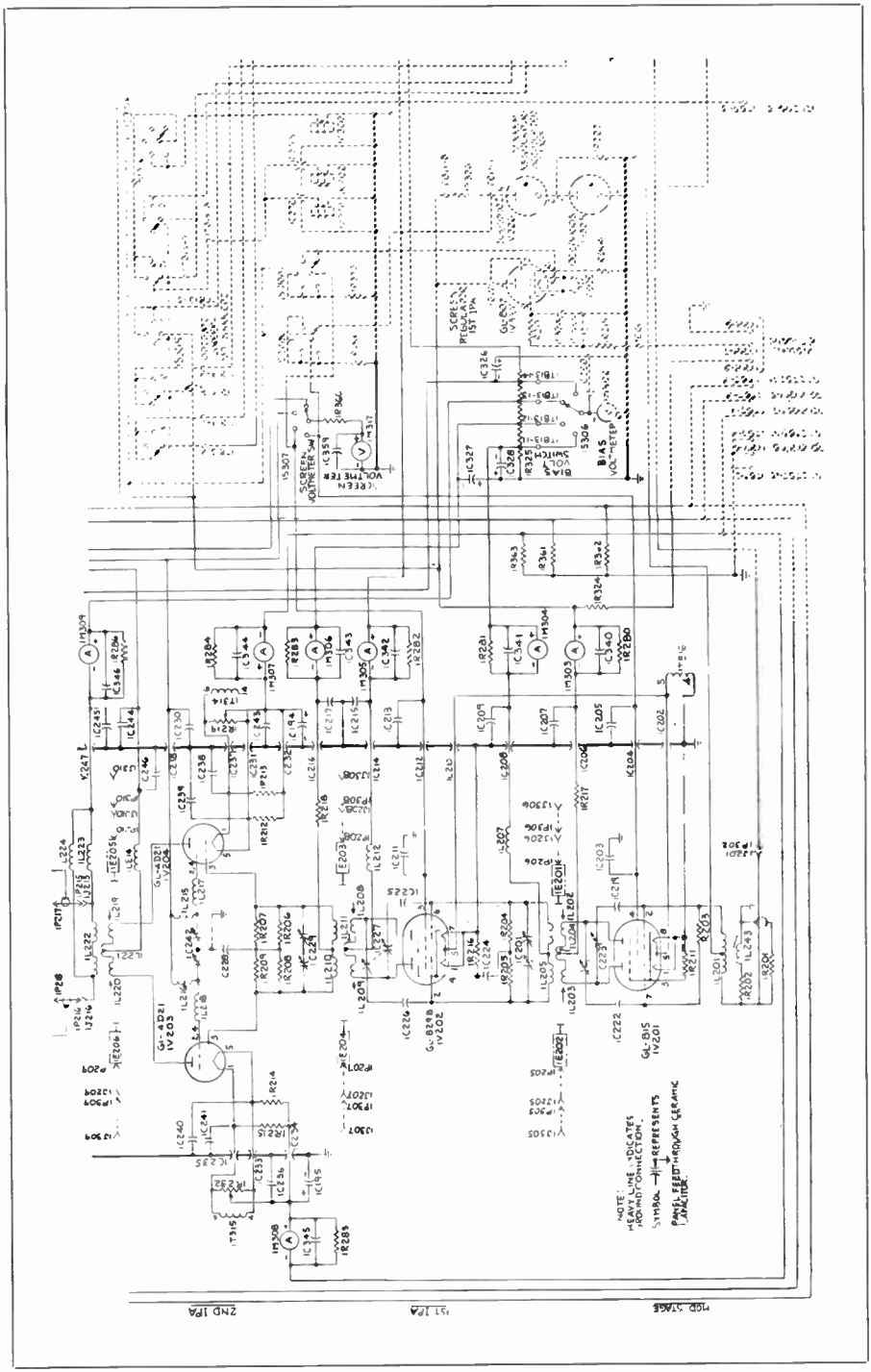

Figure 11.6K. Modulator Stage, 1st and 2nd Intermediate Power Amplifiers.

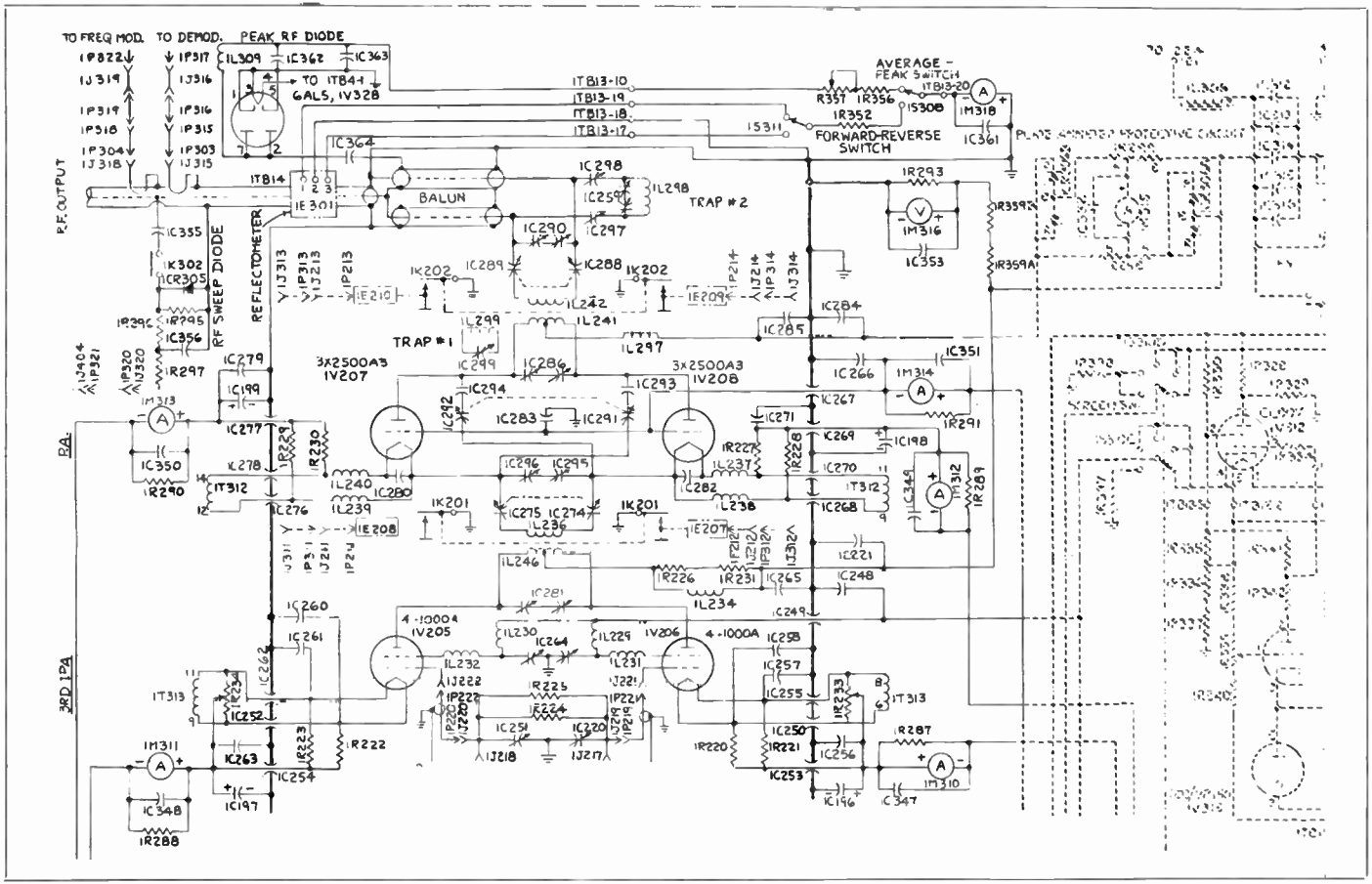

Figure 11.6L. 3rd Intermediate Power Amplifier, Power Amplifier and Transmission line coupling circuits.

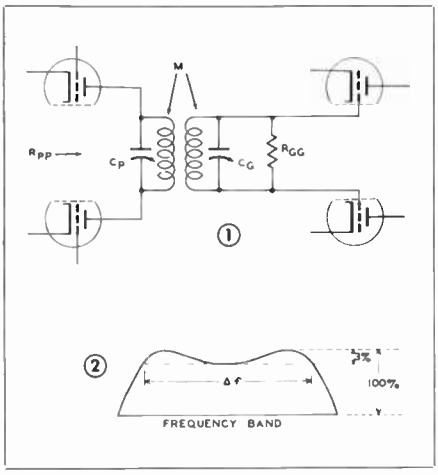

Figure 11.6M.

loading resistance R_{GG}), decreases the dip. Loading is fixed on all stages except the 3RD IPA and the PA where it may be adjusted by a procedure to be described.

The input resistance, R_{pp}, presented by the circuit is given by

$$R_{pp} = \frac{0.138}{\Delta f C_p}$$

where R_{pp} = resistance in ohms
Δf = frequency band as illustrated in (2) of Fig. 11.6M
C_p = total capacity across primary circuit (including output capacity of tube)

The first four amplifiers are tetrodes operating in their constant current region. The power amplifier is a grounded grid triode but the equivalent internal resistant is less than the load resistance as calculated above. Therefore, every effort is made to maximize the resistance presented by the primary circuit. This is accomplished by minimizing the primary capacitance by the use of copper slug tuning instead of variable capacities.

The resistance, R_{GG}, required for proper bandpass is given by

$$R_{GG} = \frac{0.092}{\Delta f C_G}$$

where R_{GG} = grid to grid resistance in ohms
Δf = frequency band as defined previously
C_G = total capacity across secondary circuit (including input capacity of tube)

Thus again, it would appear that it would be desirable to maximize this resistance so that the power generated by the driving tubes would be dissipated in a high resistance and result in the highest grid to grid voltage on the driven tube. However, it has been found that effects, such as cathode lead inductance, present an effective grid to grid resistance comparable to that calculated from the formula. Since the equivalent resistance presented by these stray effects varies with frequency, it has been shunted with an actual resistance of such a value as to make the resulting total load resistance reasonably uniform over the band desired. This total resistance is considerably less than would be calculated from the formula with the least possible value of capacity across the grid circuit. Thus the capacity across the secondary can be increased by adding the capacity of a conventional tuning capacitor.

The physical loading resistances of all stages except the grid of the PA and the output circuit are fixed in value at the factory to give the proper loading.

The input resistance of a push-pull grounded-grid Class B amplifier is approximately four times the reciprocal of the tubes transconductance. This value is considerably less than that calculated from the formula. Similarly the effective radiation resistance of the antenna, as presented balanced to ground at the input terminals of the bazooka, is low.

The sketch of Fig. 11.6N illustrates the method used to transform the actual low resistance R_2 to the desired higher resistance R_{GG}. The loading on the circuit is dependent upon the ratio of $C_{X1} + C_{X2}$ to C_S while the tuning of the circuit is determined by the equivalent ca-

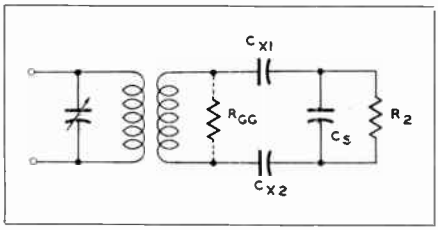

Figure 11.6N. Interstage RF coupling resistance.

pacity equal to C_{X1}, C_{X2} and C_S in series. The capacitors are usually proportional so that C_{X1} and C_{X2} have the major effect on frequency and C_S has the major effect on loading.

6. 1ST IPA (Fig. 11.6K)

The 1st IPA is a GL-829B operating as a push-pull wide-band Class B linear radio frequency amplifier. Cross neutralization is accomplished by means of adjustment of 1C227. The grid circuit is tuned by the capacitor 1C201 and the plate circuit by copper slugs. These adjustments are made in accordance with the Visual Alignment Procedure.

7. 2ND IPA (Fig. 11.6K)

The second IPA is a push-pull pair of GL-4D21's operating as a wide-band Class B linear amplifier. Isolation between input and output circuits is obtained by series tuning the screen inductance to ground with the capacitor 1C242. For the method of making this adjustment see Initial Operation. The grid circuit is tuned by the capacitor 1C229 and the plate circuit by copper slugs. The setting of these controls is as determined in the Visual Alignment Procedure section.

8. 3RD IPA (Fig. 11.6L)

The third IPA is a push-pull pair of 4-1000A's operating as a wide-band Class B linear amplifier. Isolation between input and output circuits is obtained by series tuning the screen inductance to ground with the capacitor 1C264. The grid circuit consists of a ¾ wavelength line which is tuned and loaded at approximately the center of the half wave section by 1C220, 1C251, 1R224, and 1R255. The plate circuit is tuned by the special capacitor 1C281.

9. PA (Fig. 11.6L)

The PA is a push-pull pair of 3X 2500A3's operating as a wide-band grounded grid Class B amplifier. Cross neutralization is provided by the capacitors 1C291, 1C292, 1C293, and 1C 294. For the method of making this adjustment see Initial Operation. The grid is tuned by the combination of capacitors 1C274, 1C275, 1C295 and 1C 296 as described under RF Double-Tuned Circuits. The plate circuit is tuned by the special capacitor 1C286.

10. THE OUTPUT CIRCUIT (Fig. 11.6L)

The output circuit consists of the PA plate tank 1L241-1C286; the output circuit 1L242-1C288, 1C289 and 1C290; the lower sideband traps, 1C299-1L299 and 1C297, 1C298, 1C259-1L298, the balun, the reflectometer, the peak RF sweep diode and the coupling loops for the demodulator and visual carrier frequency monitor.

The balun transforms the substantially resistive single-ended 50-ohm impedance presented by the transmission line at the output of the Transmitter to the balanced 200-ohm impedance presented to the output tank. It is provided with an adjustable tuning plate.

The plate tank and the output tank form a typical double-tuned circuit. The capacitors 1C288, 1C289, 1C290 form a dividing network for adjusting the loading presented by the balun to that required for the proper bandpass of the circuit. 1C299-1L299 is a narrow band absorption trap inductively coupled to the plate and output tanks. Its purpose is to put a notch in the bandpass at a frequency 1.25 mc below the visual carrier. The other absorption trap 1L298-1C259 is shunted across the input of the balun, the degree of coupling being controllable by the capacitors 1C297 and 1C298.

A sample of the RF voltage on the output transmission line is coupled to the diode 1V328 by the capacitor 1C364.

The time constant of 1C363 and 1R356, 1R357 and the equivalent resistance of the meter 1M318 is long compared to the time interval between vertical sync pulses. Thus the reading on 1M318 when switched in is proportional to the peak value of the synchronizing pulse independent of picture content. The meter is required by the FCC Standards of Good Engineering Practice Concerning Television Broadcast Stations.

1E301 is a reflectometer (M. C. Jones Electronics Co., Type MM414). With 1S308 in the proper position the meter 1M318 will read proportional to the voltage in the forward traveling wave for one position of 1S311 and proportional to the voltage in the backward traveling wave for the other position of 1S311. Since the reflectometer reads proportional to the average power being transmitted the reading will vary with picture content. The standing wave ratio is equal to the sum of the forward and reverse readings divided by their difference.

A sample of the RF voltage across the transmission line is coupled out by the condenser 1C355 and rectified by the crystal 1CR305. The resulting signal is fed through the decoupling network 1R297, 1R296, 1R295 and 1C356 to the scope output selector switch on the sweep generator. The relay 1K302, when closed, connects 1CR305 to 1C355 for most sensitive operation. To protect the crystal from full transmission line voltage when running full power or when sweeping from the lower stages, relay 1K302 is interlocked with the OPERATE-SWEEP-SET MARK switch and the SCREEN switch.

1J316 and 1J317 provide RF power for the visual demodulator and the visual frequency monitor.

11. VISUAL RECTIFIER CIRCUITS

A. High Voltage Rectifier

The visual high-voltage rectifier consists of six GL-8008 tubes in a three-phase full-wave rectifier. Approximately 3.5 amperes at 2350 volts is supplied. In addition, one ampere at 1000 volts is supplied from the neutral of the plate transformer. This causes three of the six rectifier tubes to function as a three-phase single-wave rectifier. To avoid DC saturation of the transformer core, the zig-zag connection is used. Quick-acting AC overload protection in the primary of the transformer is furnished by a magnetic-trip visual HV breaker. A door-actuated switch shorts the secondary terminals of the high-voltage transformer and grounds both of the DC output terminals of the rectifier. Quick acting DC overload protection is provided by an overload relay. The filter for each section of the rectifier is located in the Visual cubicle. A single L section is used in both cases. Resistors limit the charging current of the capacitor banks on the start, and after a short time delay, are shunted by contacts on a step-start relay.

B. Screen Regulators

The primary purpose of the screen regulators is to maintain a constant DC screen voltage on the various RF amplifiers. In addition the screen regulators for the 2nd and 3rd IPA screens raise the screen voltage during the vertical pedestal interval to compensate for small amounts of regulation in the bias and plate supplies.

Fig. 11.60 shows a simplified elementary diagram of the 3rd IPA screen regulator. The voltage from the cathode of 1V313 to ground is the regulated voltage which is applied to the screens of the 3rd IPA. Any variation in this voltage are sampled by the network 1R346-1R347-1R348, etc., and coupled to the grid of one section of 1V314. The cathode of this section of 1V314 has its voltage-to-ground held constant by 1V 315 and 1V316. Therefore, voltages applied to the grid of 1V314 result in a net change of grid-to-cathode voltage of 1V314 of the same magnitude and sign. Assume the variation in the screen regulator output voltage to be an increase. This results in a less negative grid-to-cathode voltage and more plate current in 1V314. The increase in plate

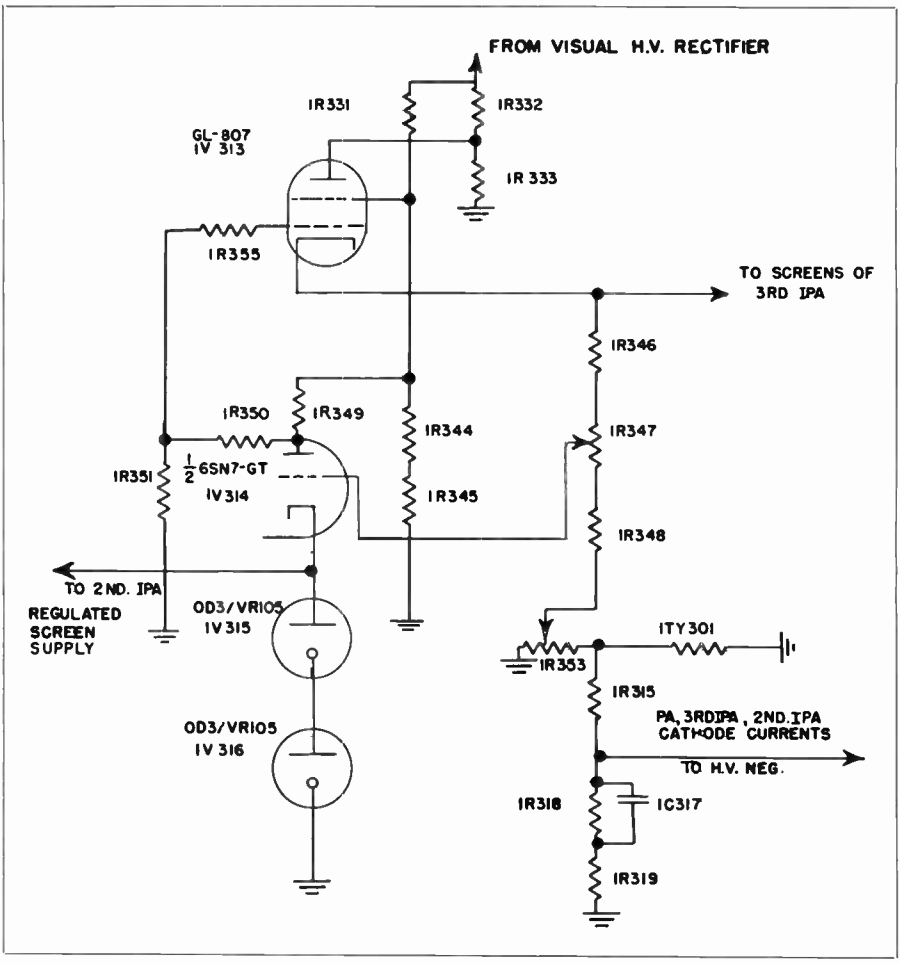

Figure 11.60. Simplified Elementary Diagram, 3rd IPA Screen Regulatar, Type TT-10-A Television Transmitter.

current increases the voltage drop across 1R349. A portion of the voltage is sampled by the network 1R350-1R351 which results in a more negative grid-to-cathode voltage in 1V313. This increases the voltage drop across 1V313 and results in less voltage from cathode-to-ground which is in opposition to the initiating effect and hence achieves stabilization.

In addition to the above stabilization of the screen supply against variation in voltage with changes in load, it is necessary to compensate for the regulation of some plate and bias supplies whose voltage varies during the vertical blanking interval. This is accomplished by sampling the sum of the cathode currents of the PA, 3rd IPA, and 2nd IPA stages by the resistor 1R318. The current has roughly the form of the video with increasing current corresponding to blacker picture. The pulse of current which flows during the vertical blanking period creates a voltage negative with respect to ground across 1R318. This pulse voltage is partially integrated to sawtooth shape by the capacitor 1C317. A part of the resulting negative voltage is applied to

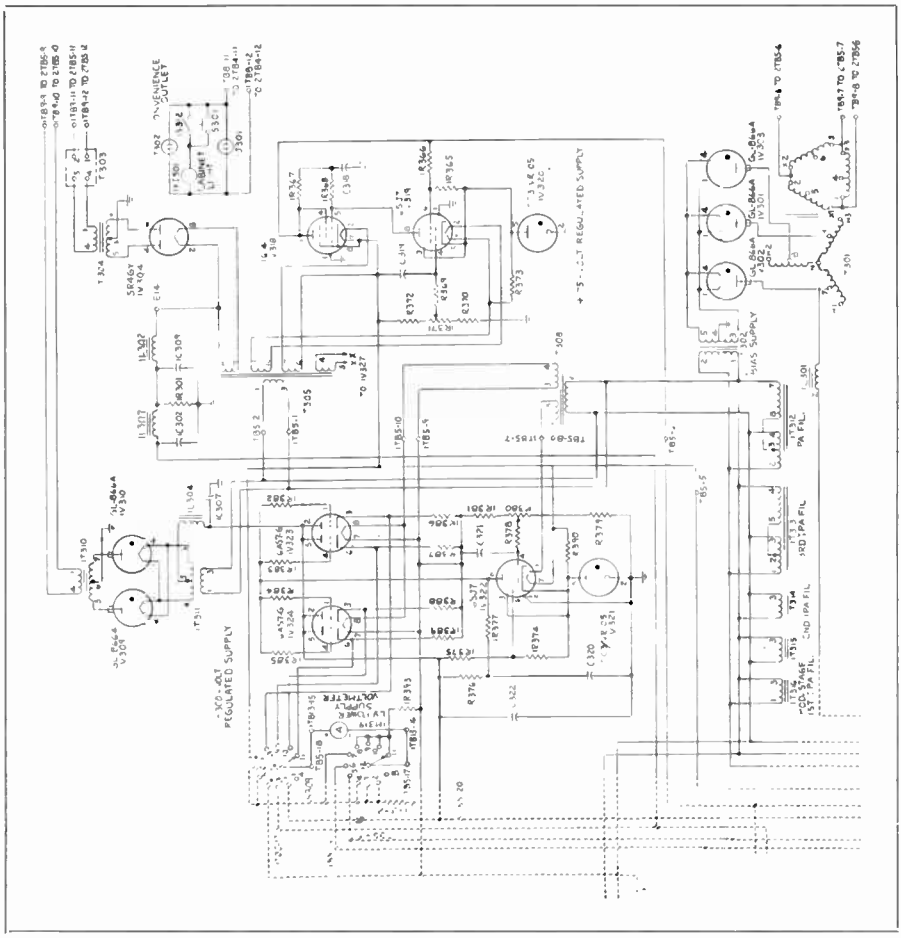

Figure 11.6P. Visual Low-Voltage Supply, Modulator Low-Voltage Supply and Visual Bias Supply.

the grid of 1V314 and by an analysis similar to the one above will result in a raising of the regulated screen voltage. Thus during the vertical blanking interval the gain of the RF amplifier is increased to overcome the regulation of its plate and bias supplies.

The screen voltage on the 1st IPA is used to control the gain of the amplifier to compensate for changes in output to line voltage variations, changing loading, etc. This adjustment is obtained by changing the grid voltage on 1V327 by the VISUAL PEAK POWER control panel. This varies the effective resistance of 1V327 and hence, the screen voltage on the 1st IPA. In addition considerable stabilization is achieved by the cathode-follower action of 1V327. Assume that in drawing current, the voltage on the screen of the 1st IPA falls. This makes the grid-to-cathode voltage of 1V327 less negative and reduces its internal impedance which reduces the voltage drop across 1V327 and increases the voltage on the screen of the 1st IPA. This is opposite to the initiating voltage thus achieving stabilization.

The screen voltage on the modulated stage is stabilized by voltage regulator tubes.

C. Visual Low-Voltage Supply (Fig. 11.6P)

The visual low-voltage supply furnishes 400 volts for the 1st IPA plate and regulated 300-volts for the MODULATED stage, exciter and sweep generator. It consists of two GL-866A rectifiers, in a single-phase full-wave circuit. 1V323 and 1V324 are series regulators, 1V322 is the amplifier tube, 1V321 is the voltage reference tube. These comprise the regulating section.

D. Modulator Low-Voltage Supply (Fig. 11.6P)

The visual modulator positive supply consists of a 5R4GY rectifier connected in full wave with a two-stage choke-input filter. The output is positive 300 volts at 0.25 amperes. A portion of the output of this supply when fed through the OPERATE-SWEEP-SET MARK switch is supplied to the 175-volt regulated supply which also feeds the modulator. 1V318 is the series regulator. 1V319 is the voltage amplifier. 1V320 is the voltage reference for this regulated power supply.

E. Visual Modulator Negative Regulated Supply (See Fig. 11.6Q)

The visual modulator negative regulated supply furnishes a regulated negative 300 volts for the modulator. It consists of a 5R4GY, in a single-phase full-wave circuit. 1V308 is the series regulator. 1V307 is the voltage amplifier. 1V306 is the voltage reference for the regulating section. In addition, 1V306 stabilizes the output of a selenium rectifier on the same plate transformer as the main rectifier. The additional voltage is added to the —300 volts to provide a —405 volt output for the modulator.

F. Visual Bias Supply (Fig. 11.6P)

The visual bias supply consists of three GL-866A's, in a three-phase single-wave connection. The output of this rectifier is impressed across a tapped bleeder resistor which supplies the bias voltages for the various stages.

Due to space limitation the details of the Aural Transmitter portion of the TT-10-A are omitted here. The reader unfamiliar with the principles of phase and frequency modulation should obtain textbooks on that subject and study them implicitly.

TUBE INSTALLATION

All tubes with the exception of those noted below are installed in the standard manner. Each tube socket will bear the type number of the proper tube. Make sure the plate connectors of the GL-8008 tubes in the visual rectifier are tight and are pushed down sufficiently to make contact with the entire area of the tube cap.

The GL-4D21 tubes used in the 2nd IPA of both the Aural and Visual Transmitters should be installed in the following manner:

A. Insert tube in its socket making sure the base of the tube passes *inside* of the base clips.

B. Place the glass chimney over the tube making sure the base passes *over* the base clips.

C. Install the plate connector and tighten the set screw making certain that the connector has maximum engagement with the plate cap.

The 4-1000-A tubes in the PA section of the Aural and the 3rd IPA section of the Visual Transmitter are installed the same way as the GL-4D21 tubes.

The 3X2500A3 tubes used in the PA of the Visual Transmitter should be installed by grasping the tube by its anode and inserting it, filament connectors down, into the socket. Make sure the inner rod of the concentric filament connector on the tube mates with its socket on the transmitter filament assembly. After the tube is properly engaged by its socket, force it home by pressing down and rotating the tube.

The tube may be easily removed by clamping the tube puller around its anode and lifting while rotating the tube.

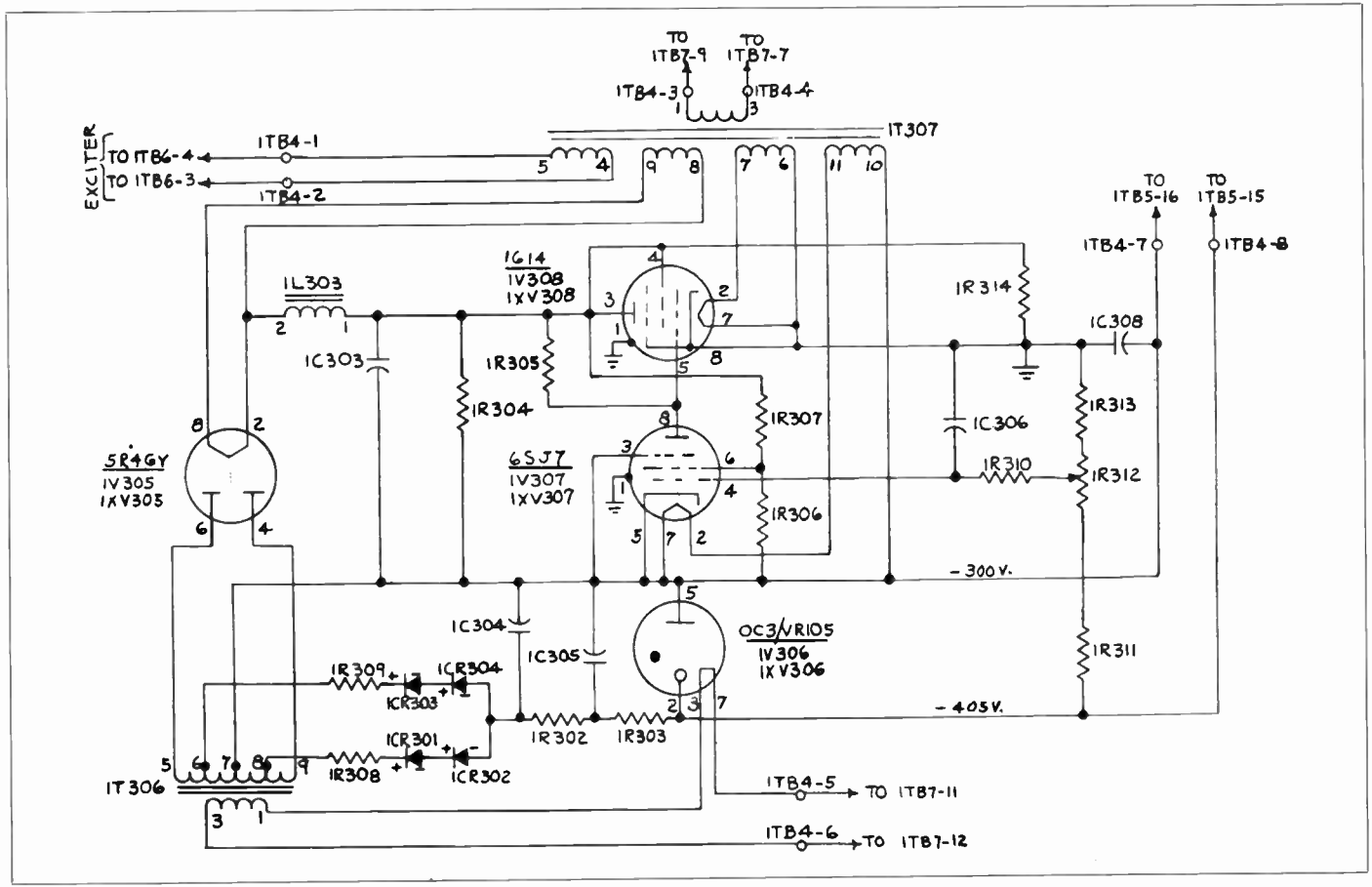

Figure 11.6Q. Elementary Diagram, Visual Modulator negative regulated supply, Type TT-10-A Television Transmitter.

OPERATION

1. INITIAL OPERATION

A. Preparation for Use

(1) Wire check all interconnecting cabling.

(2) Inspect installation for cleanliness.

(3) Check both of the blower motor bearings for oil level at the lower oil cup. Add SAE No. 30 oil to the top port if necessary. Check the blower belt for proper tension. Check the blower bearings through plugs in the top of the bearing for ⅓ to ½ grease level. If the level is not correct add grease as specified.

(4) Check power source as 197 to 242 volts 3 phase 60 cycles AC.

(5) Place all of the following transmitter breakers in the OFF position.

a. VISUAL HV
b. REG LINE
c. AURAL HV
d. VISUAL
(1) FILAMENT
(2) BIAS
(3) LOW VOLTAGE
(4) Modulator Low Voltage (MOD LV)
(5) Modulator Regulated Supply (MOD REG)
e. CONTROL
f. BLOWER
g. AURAL
(1) PA SCREEN
(2) LOW VOLTAGE
(3) BIAS
(4) FILAMENT
h. Rotate the INPUT LINE VOLTAGE and the REG LINE VOLTAGE meter switches to the OFF position.
i. Turn the AUTO RECLOSURE switch to the OFF position.

(6) Close external disconnect switch energizing power input to the transmitter.

(7) Check input voltage to the tolerances given above with the INPUT LINE VOLTMETER. Phases should balance within ±2%.

(8) Close REG LINE switch. The REG LINE VOLTMETER should indicate. Adjust REG LINE VOLTAGE control until the average of phase voltages as read by the voltmeter is 230 volts.

(9) Close CONTROL breaker. RECLOSURE SW supervisory light should illuminate indicating OFF position of AUTO RECLOSURE switch. Green TRANS START button should illuminate.

(10) Press TRANS START button. AIR supervisory light should come on indicating no air flow.

(11) Close BLOWER switch. Blower motor should come up to speed and AIR supervisory light should extinguish indicating establishment of air flow. If supervisory light does not extinguish:

a. Phase rotation may be causing blower to rotate backward. If so, shut down and interchange two of the transmitter input power leads or two of the leads to the blower terminal board 2TB10.

b. Belts between blower motor and blower may be improperly installed.

c. Air Flow Interlock may be defective.

B. Visual Transmitter

(1) On the Visual cubicle rotate the SCREEN switch to OFF, OPERATE SWEEP-SET MARK switch to SWEEP, and TEST-CLAMP switch to TEST.

(2) Close VISUAL FILAMENT switch. All filaments in the Visual and Rectifier cubicles should come on. After approximately 30 seconds VISUAL PLATE green ON button will light indicating that the visual filament time-delay relay has timed out. Also, the visual BIAS supervisory light should illuminate. An additional 15 minutes of filament heating time should be allowed for the newly installed mercury vapor rectifiers. In subsequent operations this will not be necessary.

(3) Turn on the VISUAL BIAS switch. The visual BIAS supervisory

light should extinguish. Check the bias voltages by the bias voltmeter on the upper right panel of the Visual cubicle. Correct readings are:

PA	80 volts
3rd IPA	55 volts
2nd IPA	45 volts
1st IPA	15 volts

Deviations of ±5% are permissible.

(4) Turn on the VISUAL MOD REG switch. Rotate 1S309, located on the bottom right panel of the Visual cubicle, to the —300 REG position and adjust the VOLT ADJ control, R312, located on the bottom left panel of the Visual cubicle, until the meter, 1M319, located on the upper right panel of the Visual cubicle, reads 300. Rotate 1S309 to the —405 regulator position and read —405 volts ±5% on 1M319. Set the DC INSERTION level at —35 volts by means of the WHITE CLIPPER control on the visual modulator.

(5) Turn on the MOD LV switch. With 1S309 rotated to the +300 volt position, the meter reading should be 300 volts ±10%.

(6) Turn on the VISUAL LOW VOLTAGE switch. Rotate 1S309 to the +400 position. The reading should be 400 volts ±10%. Rotate 1S309 to the +300 REG position and adjust the +300 VOLT ADJ control, located directly below the switch, until the voltmeter reads 300 volts. The current carried by the various sections of the series regulator for the 300-volt regulated supply is indicated by switch positions on 1S309 labeled 1V23-2, 1V23-5, 1V 24-2, and 1V25-5. These currents should balance within 25 percent and be approximately 30 ma.

(7) Align the sweep generator as described in THEORY AND CIRCUIT ANALYSIS-VISUAL TRANSMITTER, Sweep Generator section, presented earlier.

(8) Accurately set the markers of the sweep generator by the following procedure:

a. Plug the output of the sweep generator into the modulated stage receptacles.

b. Rotate the OPERATE-SWEEP-SET MARK switch to the SET MARK position, and the SCREEN switch to the modulated stage position.

CAUTION: Do not operate the Visual PLATE ON button at this time.

c. Rotate 1S309 to the +175 REG position and adjust the +175 VOLT ADJ control, located directly above the switch, until the meter reads 175 volts.

d. Adjust the modulated stage plate current to approximately 20 ma by means of the TEST BIAS control on the visual modulator.

e. Rotate the SCOPE INPUT switch on the sweep generator to the TERMINATIONS 5 or 6 position. The sweep pattern should be visible on the scope with markers and a "birdie" at the carrier frequency.

f. Drive the input of the visual modulator with a video signal generator and observe the sidebands of the modulation on the scope. Set the generator at 0.75 mc and adjust the lower marker to coincidence with the lower sideband by adjusting capacitor 1C420. Set the generator at 4.0 mc and adjust the upper marker to coincidence with the upper side-band by adjusting capacitor 1C425. To facilitate tuning it is

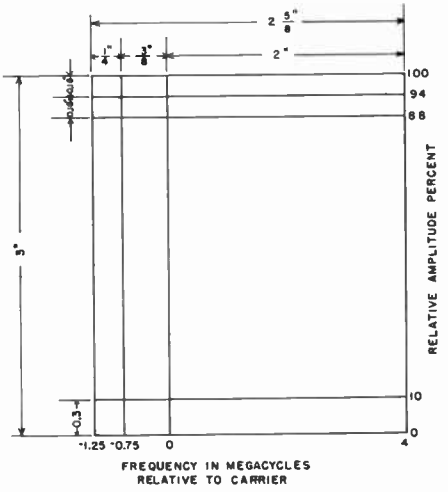

Figure 11.6R. Plexiglass Cover Reference Graph for 5" scope.

recommended that you install on the scope the transparent cover graph, Fig. 11.6R. By adjusting the horizontal gain and centering controls on the scope, the markers may be brought into coincidence with the marks on the cover corresponding to the marker frequency.

g. Return the OPERATE-SWEEP-SET MARK switch to the SWEEP position and the SCREEN switch to the OFF position.

(9) Visual Alignment Procedures and Neutralization. (Steps a through t include alignment and neutralization. Step u covers alignment only assuming neutralization has been completed.)

The alignment of the Transmitter is essentially that of adjusting the bandpass of a series of cascaded RF amplifiers. It is accomplished in much the same manner as the IF alignment of a receiver using the visual alignment technique. The procedure consists of viewing the radio frequency voltage vs. frequency wave as detected by a crystal on the output transmission line, as the successive amplifier stages are driven by a constant voltage and variable frequency by a sweep generator. The procedure is as follows:

a. Patch the SWEEP OUTPUT into the PA receptaeles. Rotate the switch on the sweep generator to the DETECTORS 4 position which connects the scope input to the crystal rectifier on the output transmission line. (Note that at this point, the Visual Transmitter should be operating into a dummy load similar to G-E Type TX-4-A.) Adjust the OUTPUT SERIES, OUTPUT SHUNT, and PA PLATE tuning controls as follows to give the bandpass shown on Fig. 11.6S(1).

(1) Set the OUTPUT SHUNT control at maximum capacity and detune the OUTPUT SERIES capacitor until it has no effect on the trace. Also detune TRAP No. 1 and TRAP No. 2 until they have no effect on the trace.

(2) Tune PA PLATE until single-tuned response is obtained.

(3) Tune OUTPUT SERIES control until double-tuned response curve is obtained.

(4) If the curve is undercoupled, swing the output coil to mesh more with the PA tank coil.

(5) Readjust the resulting curve to that desired as follows:

(a) Increasing coupling increases frequency spread between humps and conversely, decreasing coupling decreases the frequency spread.

(b) A small adjustment of the PA PLATE tuning will raise one hump and lower the other, that is, rock the curve.

(c) An adjustment of the OUTPUT SHUNT or OUTPUT SERIES alone will similarly rock the curve.

(d) For a fixed coupling, the ratio of the capacity in the OUTPUT SERIES capacitors to that in the OUTPUT SHUNT capacitor determines the dip in the center of the bandpass. The higher this ratio, the less the dip and, conversely, the lower the ratio the more the dip.

(e) To move the bandpass in frequency, first raise the peak on that side of the trace toward which the bandpass is to be moved by means of the PA PLATE control. Make the trace flat again by an adjustment of the OUTPUT SERIES or OUTPUT SHUNT control. Adjust the ratio between OUT-

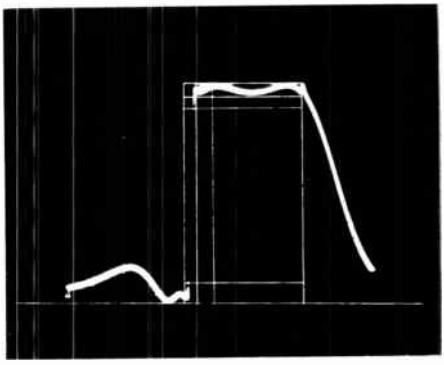

Figure 11.6S. (1) RF Sweep from P.A. plates.

PUT SHUNT and OUTPUT SERIES to give the desired dip.

b. Tune TRAP No. 1 into the bandpass until the response, 1.25 mc, below the visual carrier, is below the 10% line on the scope. Some readjustment of OUTPUT SERIES, OUTPUT SHUNT and PA PLATE might be necessary.

c. Adjust the horizontal sweep on the scope until the region around 2 mcs *below* the visual carrier comes into view. Tune TRAP No. 2 to a frequency slightly below TRAP No. 1. Readjust the scope. Readjust OUTPUT SERIES, OUTPUT SHUNT and PA PLATE until a bandpass similar to that in Fig. 11.6S(1) is obtained. If the correct loading cannot be obtained, remove the cover from the balun. Inside is an adjustable capacitor plate; moving it toward the output end will increase the loading and conversely, moving it toward the input end will decrease the loading. Replace the cover after the adjustment is made and prior to application of power.

d. Patch SWEEP OUTPUT to 3RD IPA and minimize any resulting pattern by adjustment of the PA NEUT control.

e. Close the VISUAL HV switch. The SCREEN switch should be in the OFF position. Press the VISUAL PLATE green ON button. Observe the PA plate voltage and current, and cathode current. Change transformer primary connections to obtain approximately 2350 volts PA plate voltage, 0.6 amperes PA plate current, and 0.3 amperes cathode current approximately.

f. Adjust 3RD IPA PLATE and PA CATHODE SHUNT and SERIES the same way as outlined for the PA circuit. Resulting bandpass should be similar to Fig. 11.6S(2).

g. Press VISUAL PLATE red OFF button and readjust PA NEUT for minimum feed through indication. Patch sweep generator into PA receptacles and trim the final alignment.

h. Patch sweep into 2ND IPA receptacles and turn on the VISUAL PLATE. Minimize the resulting pattern by means of the 3RD IPA SCREEN adjustment.

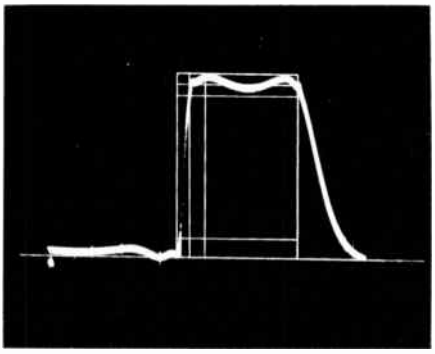

Figure 11.6S. (2) RF Sweep from IPA plates.

i. Patch sweep into 3RD IPA receptacles and readjust the tuning of this stage for proper bandpass.

j. Patch sweep into 1ST IPA receptacle and rotate the SCREEN switch to 3RD IPA. Rotate SCREEN VOLTAGE switch to 3RD IPA and adjust the SCREEN meter reading to 500 volts by means of the 3RD IPA SCREEN control located on the middle left panel of the Visual cubicle. The 3RD IPA CATHODE meters should read 0.25 amperes. Minimize resulting pattern as in h. by means of the 2ND IPA SCREEN adjustment.

k. Patch sweep into 2ND IPA receptacles and adjust 2ND IPA PLATE and 3RD IPA GRID to give a

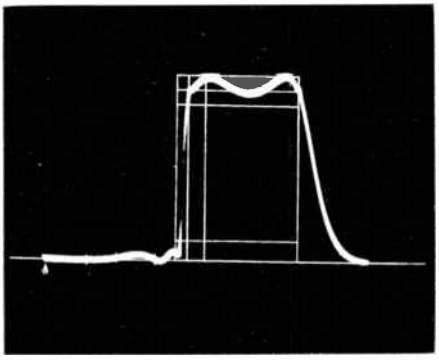

Figure 11.6S. (3) RF Sweep from 2nd IPA plates.

bandpass as shown on Fig. 11.6S(3). Alignment principles for this stage are the same as for the other stages above except that there is no control of the loading. The loading is fixed by a swamping resistor selected at the factory to give the proper bandpass when the circuit is properly tuned.

l. Rotate the SCREEN control to the OFF position and check 3RD IPA SCREEN tuning. If significant readjustment is made, 3rd stage tuning should be retouched.

m. Plug sweep into 1ST IPA receptacles and rotate the SCREEN switch to 2ND IPA. Rotate SCREEN VOLTAGE switch to 2ND IPA and adjust SCREEN meter reading to 350 volts by means of the 2ND IPA SCREEN voltage control located on the left center panel of the Visual cubicle. 2ND IPA CATHODE currents should be approximately 0.15 amp. Adjust 1ST IPA PLATE and 2ND IPA GRID tuning to give the bandpass shown on Fig. 11.6S(4).

n. Rotate the SCREEN switch to 3RD IPA and minimize the resulting pattern by making a 2ND IPA SCREEN adjustment. Patch the sweep into 2ND IPA receptacles and trim the alignment of the 2nd IPA plate and the 3rd IPA grid. Patch the sweep back into the 1ST IPA receptacles and rotate the SCREEN switch to 2ND IPA. Trim the alignment of the 1st IPA plate and 2nd IPA grid.

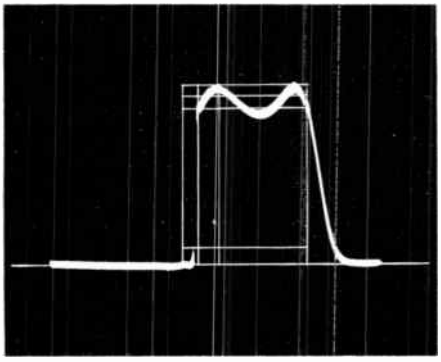

Figure 11.6S. (4) RF Sweep from 1st IPA plates.

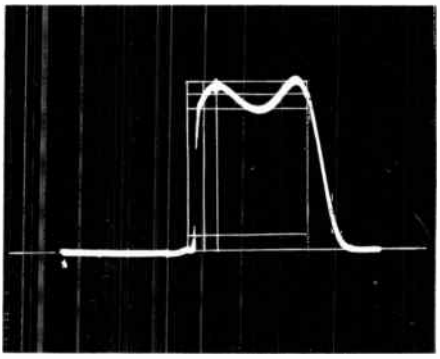

Figure 11.6S. (5) RF Sweep from Modulated Stage Plates.

o. Patch the sweep into the MOD STAGE receptacles and minimize the resulting pattern by means of the 1ST IPA NEUT control.

p. Patch the sweep into 1ST IPA receptacles and recheck the adjustment of the 1st IPA plate and 2nd IPA grid tuning.

q. Plug the sweep into the MOD STAGE receptacles. Turn the SCREEN switch to the 1ST IPA position and the SCREEN VOLTAGE switch to 1ST IPA position. The 1ST IPA plate meter should read approximately 30 ma, when the VISUAL RF GAIN control on the Control Panel gives a 1ST IPA screen voltage of 190 volts. Adjust the MOD STAGE plate and 1ST IPA GRID controls to give the bandpass shown on Fig. 11.6S(5).

r. Press the VISUAL PLATE OFF (red) button and rotate the OPERATE-SWEEP-SET MARK switch to SET MARK.

> CAUTION. SCREEN switch must be on 1ST IPA. Do *not* rotate it to MOD STAGE position.

Press the VISUAL PLATE ON (green) button and minimize the carrier pip by means of the MOD STAGE NEUT control. It is assumed that the exciter has already been tuned as outlined in the THEORY AND CIRCUIT ANALYSIS section, otherwise no carrier pip will appear. The carrier pip and the marker pip should line up.

s. Return the OPERATE-SWEEP-SET MARK switch to SWEEP. Press the VISUAL PLATE ON (green) button and recheck the tuning of the modulated stage plate and the 1st IPA grid.

t. Rotate the SCREEN switch to the MOD position. Turning the screen voltage to the modulated stage on or off should make no visible change in the curve. This completes the visual alignment.

u. The initial alignment as outlined is complicated by the necessity of neutralizing each stage and then retuning the circuits after the neutralizing adjustment. Once all stages have been properly neutralized rechecking should only be necessary at infrequent intervals. Assuming that the stages are properly neutralized, the tuning procedure becomes very much simplified, as follows.

(1) With the filaments on and the OPERATE-SWEEP-SET MARK switch in the SWEEP position, patch the sweep into the PA receptacles. Place the SCREEN switch in the OFF position and the scope switch on the sweep generator in the DETECTORS 4 position. Be sure the VISUAL PLATE is off so that no plate voltage is on the PA.

(2) Align the PA plate and output circuits including adjustments of the traps.

(3) Patch the sweep into the 3RD IPA receptacles. Push the VISUAL PLATE ON button and adjust the 3rd IPA plate and grid circuit as before.

(4) Patch the sweep into the 2ND IPA receptacle. Rotate the SCREEN switch to 3RD IPA and adjust the 2nd IPA plate and the 3rd IPA grid circuits as before.

(5) Patch the sweep into the 1ST IPA receptacles. Rotate the SCREEN switch to 2ND IPA and adjust the 1st IPA plate and the 2nd IPA grid circuits as before.

(6) Patch the sweep into the MOD STAGE receptacles. Rotate the SCREEN switch to the 1ST IPA and adjust the modulated stage plate and 1st IPA grid circuits as before.

(7) Rotate the SCREEN switch to the MOD STAGE and repeat as above.

(10) Preparation for Picture Transmission

a. Turn off the VISUAL PLATE.

b. On the Transmitter rotate the OPERATE-SWEEP-SET MARK switch to the OPERATE position. On the visual modulator set the TEST-CLAMP switch on CLAMP, and the SCREEN switch to 1ST IPA position.

c. Supply a composite video signal to one of the video input jacks on the control panel. The signal should be at least 0.8 volts from blanking level to reference white with a sync height of at least 15 percent of the picture signal. Depress the VISUAL MONITOR L1 or L2 button depending upon which line is utilized and check the input signal on the monitor as meeting the above requirements.

d. Connect the input to the Transmitter by means of the VISUAL LINE key switch. Press the VISUAL MONITOR MI button and observe the transmitter input signal on the monitor.

e. Press the VISUAL MONITOR MO selector button on the control panel and observe the modulator output on the monitor. Rotating the VISUAL FADE control to the extreme counterclockwise position removes the picture portion of the video signal leaving the sync. Leave the VISUAL FADE control full ccw.

f. Remove 1V58 (a Type 6X4) white clipper tube from the visual modulator. Adjust the WHITE CLIPPER control on the modulator so that the DC INSERTION meter on the transmitter indicates 35 volts. Replace 1V58 in the visual modulator.

g. Adjust modulator DC OUTPUT control until the DC INSERTION meter reads 20 volts.

h. Rotate the SCREEN switch to MOD position. The modulated stage plate current should be 40 ma.

i. Adjust the visual exciter output by means of the OUTPUT ADJUST control on the Visual exciter until the required power is indicated by the dummy load. The required average power can be calculated as follows:

$$\text{Transmitter Peak Output Power Required} = \frac{\text{Licensed Effective Radiated Power}}{\text{Transmission Line Efficiency X Antenna Gain}}$$

$$\text{Transmitter Average Power Required} = \frac{\text{Transmitter Peak Output Power Required}}{1.68}$$

The following is a set of typical meter readings for a 3-KW output:

PA PLATE VOLTAGE	— 2300 volts
PA GRID CURRENT	— 125 ma
PA PLATE CURRENT	— 2.6 amperes
PA CATHODE REAR	— 1.35 amperes
PA CATHODE FRONT	— 1.35 amperes
3RD IPA CATHODE REAR	— 0.36 amperes
3RD IPA CATHODE FRONT	— 0.36 amperes
3RD IPA GRID	— 12 ma
2ND IPA CATHODE FRONT	— 70 ma
2ND IPA CATHODE REAR	— 70 ma
2ND IPA GRID	— 0
1ST IPA PLATE	— 60 ma
1ST IPA GRID	— 0
MOD STAGE PLATE	— 30 ma
DC INSERTION	— 20 volts

j. Depress VISUAL MONITOR MON button and observe the output of the demodulator on the calibration monitor. Adjust the SYNC control on the control panel until the sync height shows on the monitor as 25 percent of the distance from zero carrier marker to sync peak.

k. With the Transmitter operating as in j, switch 1S308 located on the upper right panel of the Visual cubicle to the up position and take the reading of the RF OUTPUT PEAK meter. Note also the visual PA plate voltage and current. These values are required in Operating Power-Determination and Maintenance of the FCC Standards of Good Engineering Practice Concerning Television Broadcast Stations. By switching 1S308 to the down position, the RF output meter is connected to the reflectometer. The meter reads proportional to the voltage of the forward traveling wave when 1S310, located next to 1S308, is in the down position and proportional to the voltage of the backward traveling wave when 1S310 is in the up position. The power delivered to the load is equal to the difference between the forward and reverse powers. If the SWR of the load is so low that a good calibration of the reverse voltage cannot be obtained, reverse the ends of the unit and calibrate the reverse voltage as forward power. Be certain to return the unit to its original position.

1. Rotate the VISUAL FADE control to the extreme clockwise position and note the reappearance of video on the calibration monitor. Adjust the VISUAL PGM control for desired depth of modulation. Adjust the WHITE CLIPPER control on the modulator so that increasing video level does not cause modulation depths exceeding 10 percent. This may necessitate readjustment of steps g through j. The Transmitter should now be working properly into the dummy load.

m. Connect the Transmitter to the antenna and repeat the short visual alignment procedure (item u under 9, visual alignment procedures and neutralization). Repeat steps a through j of the Preparation for Picture Transmission. With the Transmitter sending a black picture with 25 percent sync, adjust the PEAK POWER control until the RF OUTPUT meter when connected as a peak voltmeter (1S308 up) reads the same as under k above. The values of the visual PA plate voltage and current should substantially agree with those determined

under j as required by the FCC standard of Good Engineering Practice. As an additional check on performance, the RF output meter may be switched to the reflectometer position and the difference between the forward and reverse powers (radiated power) compared with that obtained into the dummy load.

n. Rotating the VISUAL FADE control to the extreme clockwise position will restore the video portion of the picture. The Transmitter is now ready for picture programming.

C. Aural Transmitter

(1) Rotate the PA SCREEN voltage control to minimum and the PLATE TRANSFORMER switch to the WYE position. The Transmitter should be working into the antenna.

(2) Close the AURAL FILAMENT switch and check to see that the filaments light. After 30 seconds the AURAL PLATE green ON button should illuminate indicating the filament time-delay relay has timed out. It is necessary to have the visual OPERATE-SWEEP-SET MARK switch in the OPERATE position otherwise the sweep interlock relay, 2K21, prevents application of aural power when the visual unit is in the SWEEP or SET-MARK position. This avoids the possibility of aural RF power burning out the visual transmission line crystal diode. The aural BIAS supervisory light should be illuminated indicating lack of bias voltage.

(3) Close the aural BIAS switch. The aural BIAS supervisory light should extinguish indicating the establishment of bias voltage.

(4) Close the aural LOW-VOLTAGE switch. Adjust 2E26, PLATE TUNING control, on the aural modulator until 2E26 cathode current is minimized at approximately 25 ma. It is assumed that the aural modulator has been aligned.

(5) Adjust 1ST IPA GRID tuning to maximize 1st IPA grid current. Carefully bend the coupling loop terminating the line between the aural modulator and the 1st IPA grid to engage or disengage more of the grid coil depending upon whether more or less excitation is desired. Normal 1st IPA grid current is approximately 3 ma.

(6) Adjust 1ST IPA PLATE tuning to resonance as indicated by minimum 1st IPA plate current.

(7) Adjust 2ND IPA GRID TUNING for maximum indication.

(8) Adjust 1ST IPA COUPLING for approximately 20 ma of 2nd IPA grid current.

(9) Check neutralization of 1st IPA. Correct neutralization is determined by tuning the 1st IPA plate circuit through resonance while observing that the grid current reaches a maximum simultaneously with a plate current minimum. The two neutralizing capacitors, 3C129 and 3C130, consist of split knurled nuts on threaded studs in close proximity to the plates of 3V101. The capacitance can be varied by turning the nuts on the threaded stud which changes the spacing of the tube plates. The adjustment is locked by turning the two halves of the split nut against each other.

(10) Turn the 2ND IPA COUPLING to a minimum value. Obtain approximate neutralization of the 2nd IPA by adjusting the 2ND IPA SCREEN ADJ (adjustment) control through small increments until a point is found where there is minimum reaction on the grid circuit (as indicated by a change in grid current) as the plate circuit is tuned through resonance. It will be necessary to retune the grid circuit as the screen adjustment control is varied to keep it in resonance.

(11) Remove the external wire from 3E22 on the PA compartment. Do not ground this wire. This removes plate voltage from the PA.

> CAUTION: Be sure the PA SCREEN switch is in the OFF position. Also rotate the reflectometer amplifier sensitivity control, 3R148, in the maximum counterclockwise direction.

(12) Turn on AURAL HV switch. Press AURAL PLATE green ON button. Plate voltage should be approximately 2.0 kv. Tune the 2ND IPA grid for maximum grid current and the plate for minimum plate current. Neutralization must now be adjusted so that the maximum grid current occurs simultaneously with minimum plate current as the plate circuit is tuned through resonance.

(13) Adjust PA GRID TUNING for maximum PA GRID CURRENT which is approximately 50 ma, with the 2ND IPA COUPLING control.

(14) Obtain approximate neutralization of the PA by adjusting the PA SCREEN ADJ control through small increments until a point is found where there is minimum reaction on the grid circuit (as indicated by a change in grid current) as the plate circuit is tuned through resonance. The grid circuit may have to be retuned as the SCREEN ADJ control is varied to keep it in resonance. Since the reaction of the plate circuit on the grid current will be quite violent when the screen adjustment control is improperly adjusted, it will be found easier to obtain the correct adjustment if the OUTPUT COUPLING control is first set for rather close coupling until the approximate neutralizing point is found. The sensitivity of indication may then be increased by reducing the output coupling. This should be continued until the point is found where there is minimum reaction on the grid circuits as the plate circuit is tuned through resonance with the OUTPUT COUPLING at minimum.

(15) Push the AURAL PLATE red OFF button and reconnect the wire to 3E22, restoring plate voltage to the PA. Return the OUTPUT COUPLING control to a position of fairly close coupling.

(16) Turn on the AURAL PLATE rectifier. Close the aural PA SCREEN switch. Rotate the PA SCREEN VOLTAGE control clockwise until approximately 0.5 amp of PA plate current flows. Tune the PA to resonance as indicated by minimum current on the PA PLATE CURRENT meter. PA neutralization should now be rechecked. The 2nd IPA correct neutralization point is obtained when the grid current reaches a maximum simultaneous with a plate current minimum.

(17) At this time the tuning of all three stages should be checked. The output coupling should be such that, with PA plate circuit in resonance, the PA plate current is approximately 0.5 amperes with the grid current at 50 milliamperes and a PA screen voltage of 200 volts. The output circuit series tuning capacitor is not critical in adjustment, but should be set to obtain the greatest PA loading for a given position of the coupling coil. The position will vary for different transmission line VSWR, but in general will be about one-half of maximum capacitance at channel No. 2 and one-fifth of maximum capacitance at channel No. 6.

(18) Press red AURAL PLATE OFF button. Rotate the PLATE TRANSFORMER switch to DELTA position and press the green AURAL PLATE ON button to reapply plate voltage. Quickly check the tuning of the PA plate circuit. The OUTPUT COUPLING control should be readjusted, if necessary, to give a PA plate current reading of approximately 0.9 amperes when the PA screen voltage is 380-400 volts and the PA grid current is 70 ma. Under this condition the PA screen current should be within the range of 150-200 ma depending to some extent upon the PA loading. The PA screen current is at maximum when the PA plate circuit is tuned to resonance. It is a sensitive indicator of plate circuit tuning.

(19) It will be found that application of full plate voltage may change the neutralization adjustments of the 2nd IPA and PA slightly. Also, since neutralization is more critical at the higher voltage, it should be checked carefully on both stages. Care must be taken to move the screen adjustment controls by very small increments while making these adjustments.

(20) Depending upon the particular value of the power supply voltage, the taps should be changed on the aural high-voltage transformer, 3T24, to give a DC plate voltage as near as possible to 4000 volts. Adjust the interstage couplings, output coupling, and PA screen voltage to obtain, as near as possible, the following typical operating conditions:

1ST IPA GRID current	— 3.0 ma
1ST IPA PLATE current	— 55-65 ma
2ND IPA GRID current	— 16-20 ma
2ND IPA CATHODE current	— 110-130 ma
PA GRID CURRENT	— 70 ma
PA SCREEN voltage	— 380-420 volts
PA SCREEN current	— 175-200 ma
PA PLATE current	— 1.0 ampere
PA PLATE voltage	— 4000 volts
RF OUTPUT	— 2500 watts

The two cathode currents of the PA and 2nd IPA can be balanced within considerable limits by means of the controls on the front panel.

When operating properly the PA tube anodes will show a dull red color. The 2nd IPA plates normally show only a very dull red color indicating relatively low plate dissipation.

(21) The exact PA operating conditions should finally be determined as follows:

$$\text{Transmitter Output Power Required} = \frac{\text{Licensed Effective Radiated Power}}{\text{Transmission line efficiency} \times \text{antenna power gain}}$$

$$\text{PA Plate Current} = \frac{\text{Transmitter output Power Required}}{\text{PA plate voltage} \times \text{PA plate efficiency}}$$

The PA plate efficiency factor is 0.66 for 2.5 kw.

(22) With the Aural Transmitter operating at the required power output, place the reflectometer switch, 3S8 in the up position. Adjust the reflectometer potentiometer, 3R147, until the RF OUTPUT meter reading is 100. This meter reading can then be used as a relative power output indication. Discrepancies of the meter reading from this original setting of 100 will indicate a change in RF output power.

(23) To determine the VSWR of the aural output transmission line, first read the RF OUTPUT meter with the reflectometer switch 3S8 in the up position (indicating forward power) and then read it with 3S8 in the down position (indicating reverse power). The VSWR is equal to the sum of the two readings divided by the difference between the two readings.

(24) With 3S8 in the up position and the Aural Transmitter operating, slowly rotate the reflectometer amplifier sensitivity control, 3R148 in the clockwise direction. The meter, 3M117, reading the indicating coil current of the reflectometer relay, 3K12, will increase as this control is rotated. 3M117 should read approximately 3.5 ma when 3K12 operates shutting off the plate power. The ANTENNA supervisory light should illuminate indicating an antenna fault. Turn 3R148 counterclockwise and reapply plate voltage. Adjust 3R148 until the 3K12 coil current is approximately 1 milliampere less than the value required to operate relay 3K12. A small increase of transmission line VSWR will now actuate the antenna protective circuits.

2. ROUTINE OPERATION

During routine operation, it is intended that all power switches on the cubicle be left in the ON position. Power should be removed from the cubicles during the time the station is shut down by means of an external disconnect switch. The following procedure should be employed during start-up.

A. Starting Procedure

(1) Close the external disconnect energizing the cubicles.

(2) Press the green illuminated TRANS START button.

(3) After 30 seconds AURAL PLATE and VISUAL PLATE green ON buttons will illuminate indicating

their respective rectifiers are ready for operation.

(4) Turn on the visual rectifier. With a composite picture feeding through, adjust the SYNC stretcher control for proper percentage sync, VISUAL PGM control for proper depth of modulation, and VISUAL RF GAIN for proper peak power as indicated on the RF output meter.

(5) Turn on the aural rectifier, and if necessary, adjust OUTPUT COUPLING or PA SCREEN VOLTAGE for proper RF level as indicated on the RF output meter.

B. Stopping Procedure

(1) Push the red illuminated VISUAL and AURAL PLATE OFF buttons.

(2) Push the red illuminated TRANS STOP button. Blowers will continue to run for three minutes.

(3) After the blowers have shut down, open the external disconnect.

CHAPTER

12

TV Transmitter Operation and Maintenance

The television transmitter operator has a busier day than his counterpart at an AM or FM installation. Obviously this is partly due to the fact that he has, in effect, two transmitters instead of one to supervise. In addition, at the time of the present writing, video transmitters require constant attention for optimum picture results in contrast to the average aural transmitter which requires conparatively little watchfulness.

The transmitter operator is basically concerned with the following duties: (1) Keeping circuits in proper adjustment as to tuning, power output, percentage modulation, frequency assignment, and relative levels of blanking-to-sync. (2) Monitoring visual waveform, picture quality, visual modulation percentage, visual carrier frequency deviation. (3) Monitoring aural percentage modulation, quality, and aural carrier center frequency. (4) Keeping of proper logs as required by the FCC. (5) Preventive maintenance and (6) Emergency maintenance to *keep the station on the air.*

12.1 Transmitter Monitoring

Monitoring duties are outlined as follows:

(1) Visual transmitter amplitude-frequency characteristic (generally monitored during adjustment procedures before sign-on or after sign-off by a device such as a *sideband analyzer.*

(2) Visual modulation depth measurement in percent. Continuously monitored during the operating day.

(3) Picture quality as observed on picture monitor.

(4) Visual Carrier frequency deviation. Monitored continuously during the operating day.

(5) Visual transmitter power output Monitored continuously.

(6) Aural carrier center frequency deviation. Monitored continuously during the operating day.

(7) Aural program modulation percentage. Monitored continuously during any audio transmission.

(8) Aural program signal quality as monitored on a good quality speaker.

(9) Aural carrier power output. Monitored continuously.

The basic functional diagram of the RCA sideband response analyzer is presented in Fig. 12.1A. The wobbulator section consists of the conventional arrangement of a fixed frequency oscillator and a sweep oscillator which varies above and below the fixed frequency by approximately equal amounts. When the frequency of the sweep oscillator (f_2) is higher than the fixed frequency (f_1), the radio-frequency carrier (f_c) is modulated by the frequency f_2-f_1. During this interval, the signal fed to the antenna (and to the sideband analyzer) contains three frequencies as follows:

Carrier frequency $= f_c$

Upper sideband $= f_c + (f_2\text{-}f_1)$

Lower sideband $= f_c - (f_2\text{-}f_1)$

This signal is fed to the mixer stage which heterodynes with the signal (f_2) from the sweep generator. The result-

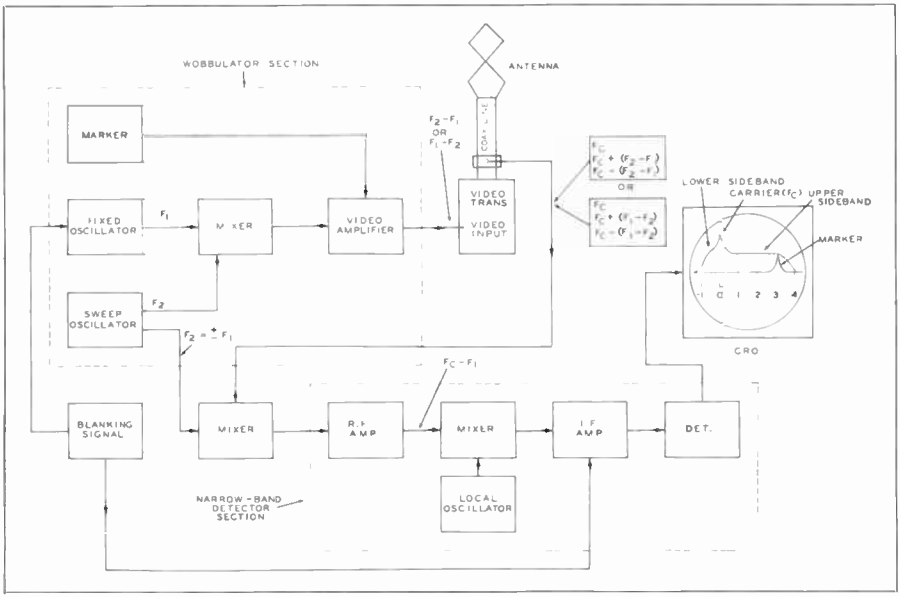

Figure 12.1A. Basic Functional Block Diagram of RCA Sideband Response Analyzer.

ing heterodyned signal is fed to the RF amplifier which is the first stage of a narrow-band detector portion of the analyzer. As shown in the diagram, this detector accepts only the frequency f_c-f_1. The output is then proportional to the upper sideband response when f_2 is greater than f1. Similarly, the output is proportional to the lower sideband when f_2 is lower in frequency than f_1. Using a sufficiently high sweep rate on the CRO displays the frequency versus amplitude characteristic of the transmitter as shown in the typical curve in the illustration.

The net effect may be seen to separate the upper and lower sideband response for the purpose of simultaneous presentation on the screen of an oscilloscope. The theory of operation is very similar to that described for checking the high-frequency response characteristics of video amplifiers at the studio in section 8.3. In this application the method is adopted to the transmitter action of vestigial sideband response. Its primary function is to check and adjust the broadband over-coupled RF circuits used in most visual transmitter circuits. The display with markers

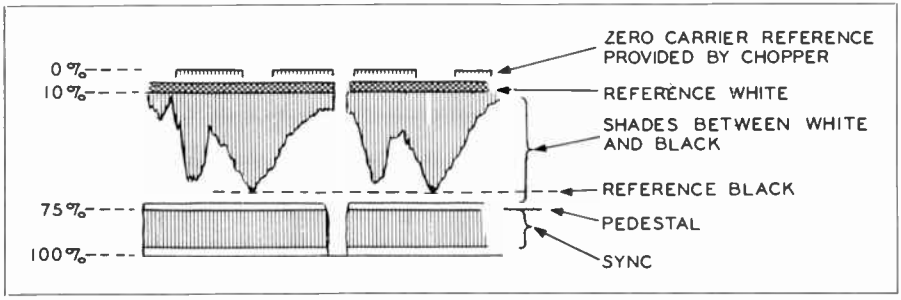

Figure 12.1B. Drawing of typical CRO display of half-tone video signal chopped at rate of 120 cps, displayed with scope sweep of frame frequency 30 cps.

obviously permits optimum adjustment of stages to obtain the proper standard transmission characteristics.

As outlined in Chapter 11, the visual modulation indicator is usually an oscilloscope used in conjunction with a keyer and a linear detector. Fig. 12.1B is a drawing of a typical display when the keyer chops the signal at a rate of 120 cps, and displayed at frame frequency (30 cps) on the scope. The transmitted signal is a good half-tone with whites and blacks so that adequate reference points may be observed by the operator. With pedestal level carefully adjusted to 75% of the peak (sync) value, the video gain may be adjusted so that reference white and reference black falls at the optimum values shown in the drawing. The monitor also permits accurate adjustment of the sync stretcher control so that exact ratios may be obtained. A calibrated scale is usually used over the tube screen as illustrated in section 3.5.

Another modulation indication method used at some transmitters is to apply the modulated radio-frequency signal directly to the vertical plates of an oscilloscope with the linear saw-tooth

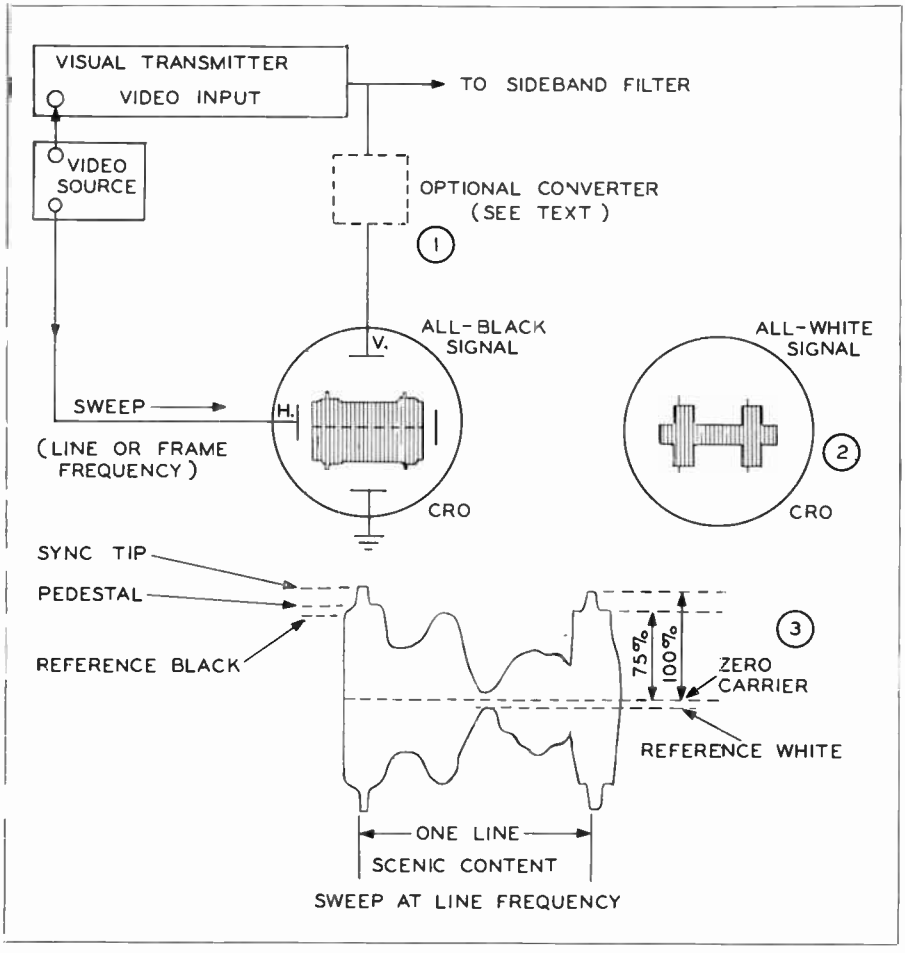

Figure 12.1C. Radio-Frequency On-Oscilloscope Method of Checking Visual Transmitter Modulation Percentage.

sweep synchronized with the line (15,750 cps) or frame (60 cps) frequency.

This is illustrated in Fig. 12.1C. The method of connection is basically shown in (1). Since a relatively high value of RF voltage is required for direct deflection of the CRO beam, the operator must assure that the connection to the transmitter does not alter tuning or other adjustments. The optional converter shown in dotted lines is an RF converter and IF amplifier which provides enough gain so that a low value of RF coupling may be used to assure that the measuring equipment does not alter any operational parameters in transmitter circuits.

The CRO is swept at the horizontal plates by either line or frame frequencies in sync with the video source. In (1) is a typical display of an all-black signal, (2) illustrates an all-white signal, and (3) shows a typical pattern of a picture transmission with sweep at line frequency.

It should be noted that this method requires monitoring at a point before the sideband filter in high-level modulation systems, to avoid erroneous results occurring from removal of most of the lower sideband frequencies. In low-level systems, the monitoring point would necessarily be at the output of the first modulated stage. Although following linear amplifiers should not alter the effective modulation percent, the practice is not to be recommended since the modulated envelope should be monitored at the output of the transmitter, for obvious reasons. This is the reason for the preferred keyer method of modulation monitoring outlined in Chapter 11 and illustrated in Fig. 12.1B. This method allows checking the signal at the output of the vestigial sideband filter or at the output of the final stage in low-level modulation systems.

For monitoring of either the actual picture or the modulated envelope at the input to the antenna system (output of vestigial sideband filter or output of final stage in low-level modulated transmitters) special considerations are involved. This is illustrated in Fig. 12.1D. In (1) is the response of an ordinary diode at this point. The sharp cut-off of the lower sideband frequency components in the RF signal result in a boost of the frequencies below 1.25 mc as shown. It is obvious that the high frequency response will be approximately 50% of the response below 0.75 mc. Thus it is realized in the case of the visual transmitter where the input is the video band frequencies and the output is in the radio-frequency spectrum with vestigial sideband characteristics, monitoring devices must be arranged and interpreted accordingly. If the ordinary diode is used ahead of the sideband filter, or at the first modulated RF stage (where both sidebands are present to an appreciable amount) the device provides a suitable signal either for picture monitoring or waveform monitoring. However the reader should understand that such monitoring does *not* provide an accurate check at the *antenna system input* since the effects of vestigial sideband transmission are *not* being monitored.

The vestigial RF output signal from the transmitter must be properly returned to the video frequency band for accurate monitor interpretation. To do this the demodulator must approach as nearly as possible the "ideal receiver" response as illustrated in (2) of Fig. 12.1D. This characteristic serves to equalize the unbalanced sideband energy distribution of the transmitted signal by a 6 db attenuation of the picture carrier. This takes place over a range of 3 db for 0.75 mc above the picture carrier frequency, and 3 db for 0.75 mc below the picture carrier frequency. To achieve this a linear detector is preceded or succeeded by suitable selective circuits to provide this overall response characteristic. The amplitude-frequency characteristic is flat from 0.75 mc to 4. mc above the carrier and substantially zero at frequencies lower than 0.75 mc below the carrier. The response at the carrier frequency should be one-half the value of the response in the upper sideband above 0.75 mc.

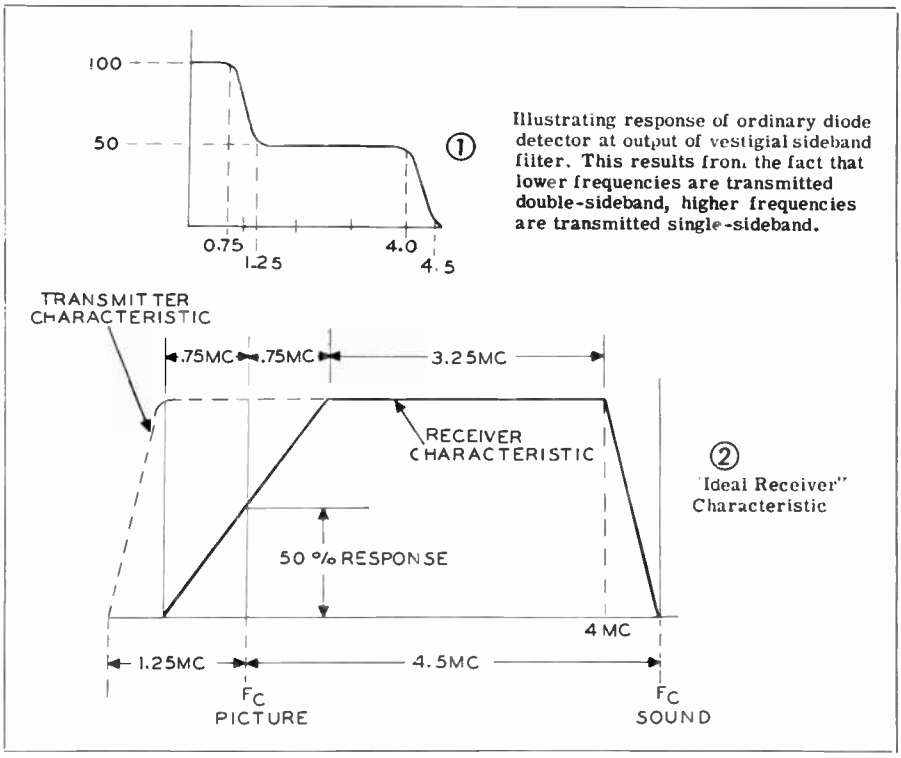

Figure 12.1D.

Many stations use a modified receiver chassis for monitoring the picture which gives an accurate final check on the radiated signal if precautions are taken to keep the receiver circuits in proper order. Such a receiver may also be used for modulation percent indication by incorporating the chopper or vibrator across the second detector to establish the zero-carrier reference line (preceding chapter). The short-circuit intervals are made sufficiently short so as not to minimize the usefulness of the oscillographic display, with a repetition rate sufficiently high to establish the zero level at least twice during the displayed trace. When displayed at frame frequencies, a common chopper rate is 120 cps which establishes 4 zero-reference lines (Fig. 12.1B). When displayed at line frequency, a chopper rate of 31.5 kc provides two zero-reference lines.

Modulation percentage for the frequency-modulated sound carrier is monitored by a meter indicator incorporated with the frequency monitor and will be described in the analysis to follow. Some stations use equipment which employs completely separate monitoring devices mounted in separate racks, others use closely associated monitors for visual and aural transmitters mounted together in a common rack. In either case, the principles of monitor action are substantially alike.

Fig. 12.1E illustrates the General Radio Type 1183-T Television Station monitor showing front panel meters and controls.* This is an integrated monitoring system providing:

*Illustrations and technical data furnished through courtesy of General Radio Company.

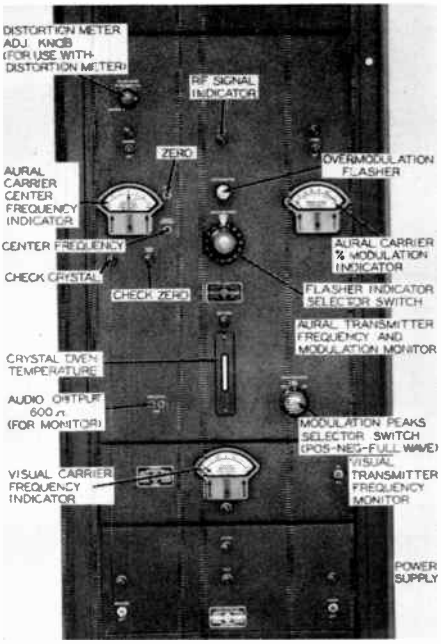

Figure 12.1E. Panel View of Complete Monitor. This is Standard Equipment with Dumont, General Electric, and RCA Television transmitters. Courtesy General Radio Co., Cambridge 39, Mass.

(1) A continuous indication of the frequency deviation of the aural transmitter in terms of a highly stable master crystal.

(2) A continuous indication of the frequency deviation of the visual transmitter in terms of the *same* master crystal.

(3) A continuous indication of percentage modulation and an over-modulation alarm for the aural transmitter.

(4) A high-fidelity audio output for distortion and noise-level measurements and for audio monitoring.

For frequency monitoring, the Type 1183-T Television Station Monitor has an accuracy adequate to meet all requirements of the FCC regulation, *including those for offset operation* in the VHF band for 30-day intervals between frequency checks, and in the UHF band for shorter periods.

The complete monitor consists of the following three instruments, each of which is described in the following paragraphs:

Type 1170-BT F-M Monitor

Type 1171-AT Visual Transmitter Frequency Monitor

Type 1176-AT Frequency Deviation Meter

The type letter designations of the complete monitor and also of the F-M Monitor and the Visual Monitor are followed by the numeral 1,2,3, to designate the frequency range for which it is designed to operate. The Type 1176-AT Frequency Deviation Meter is the same for all channels.

Frequency Monitoring—Principle of Operation

The diagram of Fig. 12.1F shows in elementary form the frequency monitoring circuits. The master reference crystal oscillator is contained in the Type 1170-BT F-M Monitor. A multiplier chain supplies a harmonic of this crystal oscillator frequency, which beats with the FM aural transmitter signal to produce a 150-kilocycle difference frequency. This 150 kc signal is amplified and limited, and is used to operate the metering circuits that indicate the center frequency of the aural transmitter.

In the Type 1171-AT Visual-Transmitter Frequency Monitor, another branch multiplier chain excited from the F-M Monitor supplies the same harmonic of the reference crystal oscillator to a mixer, where it beats with the visual-transmitter carrier to produce a 4.35-megacycle signal. This 4.35-megacycle frequency is then heterodyned with a 4351.75-kilocycle oscillator to produce a 1.75-kilocycle beat, which drives the Type 1176-AT Frequency-Deviation Meter.

Both transmitters are monitored against the same master-reference crystal, which has a high degree of stability. The stability of the 4351.75-kc auxiliary crystal has a negligible effect on the indicated deviation because its *fundamental* frequency beats directly with the signal to be monitored. Its nor-

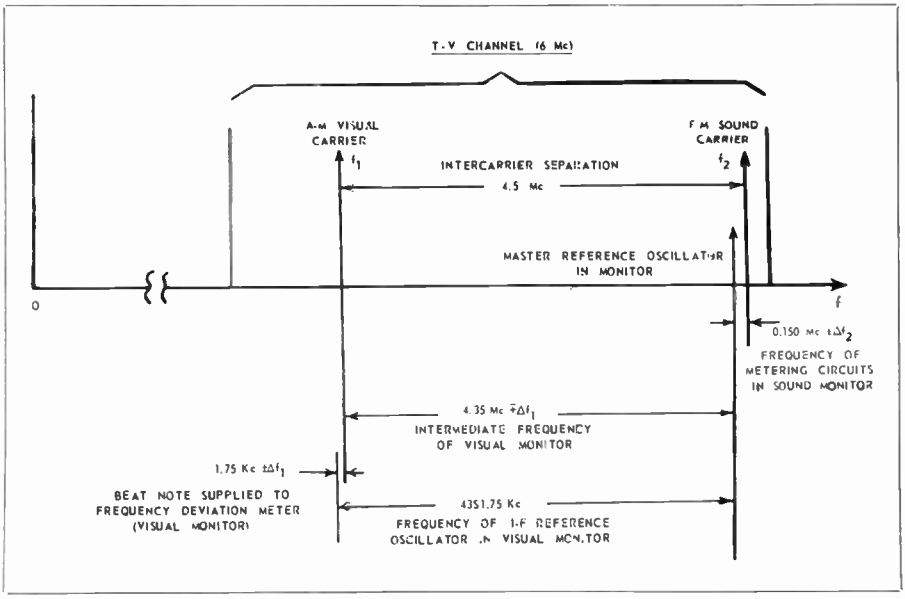

Figure 12.1F. Relationship of Transmitter Carrier Frequencies to the Frequencies of Oscillators and metering circuits of television Station Monitor. Courtesy General Radio Co.

mal drift of a few cycles, therefore, is not detectable on the deviation meter scale of 1.5-0-1.5 kilocycles.

The frequency of the master-reference crystal oscillator can be adjusted from the front panel of the Type 1170-BT F-M Monitor. This adjustment affects both monitor indicators equally. After the visual carrier has been set by this means, a front-panel adjustment in the metering circuit of the aural monitor sets the aural-carrier indicator independently to the correct value for the 4.5-mc intercarrier separation.

Type 1170-BT F-M Monitor. This instrument gives a continuous indication of center-frequency and percentage modulation (frequency deviation) of television aural transmitters. It also furnishes a high-fidelity output for measuring distortion and noise, and a 600-ohm output for audio monitoring. The monitor is designed to operate at frequencies between 44 and 900 megacycles, covering all frequencies used in television broadcasting, including the UHF band.

The block diagram of Fig. 12.1G shows the functional operation of the monitor. A harmonic of a standard-frequency oscillator beats with the transmitter frequency to produce a nominal intermediate frequency of 150 kc plus or minus the transmitter frequency deviations. This signal is then passed through amplifiers and limiters, which change the waveform to steep, square-topped pulses of constant amplitude, which are applied to a counter-type discriminator. The DC output of the discriminator is used to operate the center-frequency indicator. The AC output, suitably amplified and filtered, operates the modulation indicators and is available at two output circuits; a 100,000-ohm circuit for distortion and noise measurements and a 600-ohm circuit for audio monitoring.

Output at a harmonic of the crystal frequency is also provided to excite the Type 1171-AT Visual Transmitter Frequency Monitor.

The use of a low intermediate frequency and a counter-type discrimina-

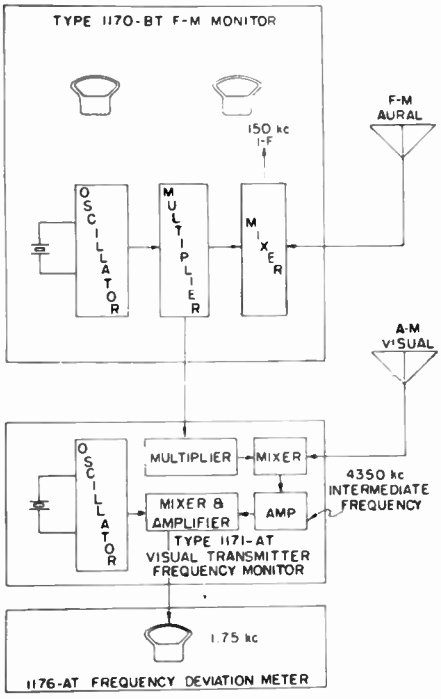

Figure 12.1G. Block Diagram of Complete Monitoring System, Showing principle of Operation. Courtesy General Radio Co.

tor results in a high degree of stability, so that a continuous indication of center frequency is achieved without reference to a second crystal for setting zero.

A highly stable crystal oscillator is used. Stability is adequate for off-set carrier operation in the VHF band.

Because the counter-type discriminator is inherently linear, accurate center-frequency indications are obtained even in periods of heavy modulation.

Discriminator is linear to better than 0.1%, permitting accurate distortion measurements.

Distortion-and-noise-measuring output includes 75 microsecond de-emphasis circuit.

Residual FM noise level is down at least 65 db from ±25 kc deviation.

Modulation meter reads positive, negative, or peak-to-peak, as selected by a switch.

Overmodulation lamp flashes when modulation exceeds level as set by a dial.

R-F sensitivity is 1.0 volt or better.

Adjustable input attenuator, with meter.

Pilot lamp indicates adequate input level.

Terminals are provided for connecting external, center-frequency and modulation meters and overmodulation indicators.

Regulated power supply.

Chassis arranged for maximum heat dissipation and easy servicing.

A zero correction is provided to compensate for long-time drift.

A functional block diagram of the Type 1170-BT Frequency-Modulation Monitor is shown in Fig. 12.1H. The standard of frequency against which the transmitter is monitored is a crystal oscillator whose frequency, when multiplied up to the region of the transmitter, differs from the assigned channel by exactly 150 kilocycles. The beat-frequency produced in the mixer, between the transmitter and a harmonic of the crystal oscillator, is fed to a series of amplifiers and clippers to produce a square wave. A "pulse counter" type of discriminator is operated by the square wave to produce an output voltage which is proportional to the instantaneous fundamental frequency of the square wave. Under conditions of 100 percent modulation, the fundamental frequency of the square wave will swing ±75 kilocycles about the 150 kilocycle center point, or average frequency. The average, or DC component, of the discriminator output signal is used to operate a vacuum-tube voltmeter which indicates the deviation of the transmitter average-center-frequency from the assigned channel.

The AC components of the discriminator output signal include the original modulation and other higher order functions present as a result of the pulse-type waveform, etc. By means of a low-pass filter, the unwanted higher order components are eliminated.

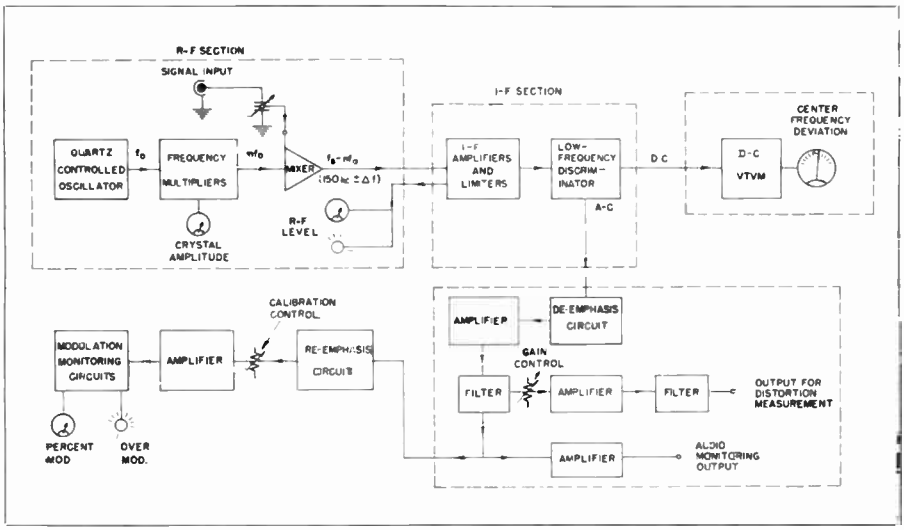

Figure 12.1H. Functional Block Diagram of the Type 1170-BT Frequency Modulation Monitor. Courtesy General Radio Co.

The audio circuits are coupled to the output of the discriminator by means of a standard 75 micro-second de-emphasis circuit (which also assists in filtering process) and a 30-kilocycle low-pass filter.

One audio amplifier operates as a low-impedance output stage to provide a local monitoring output at 600 ohms impedance for direct connection to telephone lines, etc.

A second audio amplifier is provided with a gain control and additional output filter to minimize noise and spurious signals. This circuit has been designed for very low residual noise and distortion levels and is intended for use with the Type 1932-A Distortion and Noise Meter.

A third audio system consists of a pre-emphasis circuit which restores the frequency response to a uniform characteristic for the purpose of operating the modulation meter circuits. A pre-amplifier is used to operate two semi-peak diodes, and a DC amplifier. The gain of the pre-amplifier may be changed so that the monitor may be calibrated to read 100% modulation of any value between the limits of 25 and 75 kilocycles. This permits the monitor to be calibrated for services employing modulation levels other than television FM broadcast standard of ±25 kc for 100% modulation. (The standard FM broadcast band from 88-108 mc requires ±75 kc for 100% modulation.)

The semi-peak diodes are arranged to permit the selection of positive, negative, or full-wave modulation response characteristics by means of a panel switch. The modulation meter is operated by a vacuum-tube voltmeter having the required dynamic-response characteristics for modulation monitors as specified by the FCC. On transient signals, this results in the meter response having a fast upswing and slow return.

An "Over-Modulation" warning lamp is provided, which will flash whenever the transient modulation peaks exceed a predetermined level as set on the MODULATION PEAKS potentiometer dial. The audio-modulation signal is applied to the grid of an amplifier tube together with a variable portion of a DC bias voltage, as determined by the dial setting. The total potentiometer DC voltage is made equal to the peak value

of the audio signal, at 120% modulation level, which is the full range of the dial calibration. In addition, a fixed negative bias is applied in series with the grid to maintain the tube just at the cut-off point. Thus, whenever, the modulation peaks exceed the dial setting, a pulse is developed in the plate circuit of the amplifier tube. This pulse is used to trigger a thyratron tube which causes the indicator lamp connected to its anode circuit to glow.

This circuit will respond to transient modulation peaks which are too short to cause the modulation meter to deflect to its final value. For this reason, coincidence of the meter readings and the lamp flashes may not occur on all types of program material. The two will agree closely on steady-state or sine-wave modulation. The lamp operates on positive modulation peaks. This is not significant except when asymmetrical modulation is encountered. In these instances, the agreement between the flashing lamp and the meter deflections will be closed when the meter switch is set to the positive-peak position.

In general, the monitoring applications of the modulation meter and the over-modulation lamp will be identical to the well-established practices used for many years in standard AM broadcasting. There is, however, no longer any reason to favor monitoring either one polarity of the modulation, such as exists in the AM case. Operators will find that the use of the full-wave modulation position (i.e., positive and negative simultaneously) an advantage since it eliminates the need for switching back and forth in order to determine the maximum modulation swing on asymmetrical program material.

OPERATION

TEMPERATURE CONTROL—Throw the POWER switch ON and the MONITOR switch to OFF. The red HEAT CYCLE bull's-eye should light immediately, as well as the red one at the upper right of the panel.

To test the operation of the heat-control circuit, short-circuit the thermostat terminals temporarily. The relay should open and the red HEAT CYCLE lamp go out. A fusible link is provided which melts and opens the heater circuit if the temperature becomes excessively high due to relay or thermostat failure.

The heat will remain on for about half an hour before the thermostat begins to operate. After about an hour, the thermostat will cycle so that the heat is on (indicator lamp lighted) about 50 seconds and heat off (indicator lamp out) about 160 seconds at ordinary room temperature (70° to 80° F). A period of about four hours is required before the inner temperature reaches its final value. When proper operating temperature has been reached, the thermometer should read (60 ±0.15) °C.

RANGE OF OPERATION. Either of two types of r-f mixer assemblies is supplied with the R-F Section of the monitor. The Type 1170-P1 unit covers the range between 30-162 megacycles; and the Type 1170-P2 unit covers the range between 160 and 220 megacycles.

Only one unit is supplied with each monitor and has been selected to provide operation at the frequency requested and is completely tuned and adjusted when received. Changes in these adjustments are not normally required.

CRYSTAL OSCILLATOR AND HARMONIC MULTIPLIER. Having allowed the crystal to reach normal operating temperature, turn the MONITOR switch ON and allow a few minutes for the tubes to stabilize. A time-delay relay will connect the plate supply within a period of 15-60 seconds. Depress the CHECK CRYSTAL button on the panel. A deflection of the meter to, or above, the red line will indicate that the crystal is oscillating with sufficient amplitude to drive out the first multiplier stage.

A rear jack, labeled OSC. CURRENT, is provided on the lower rear left corner of the instrument. An O

—10 ma DC meter may be plugged into this jack, using a standard telephone plug, to check the oscillator current. This should be approximately 2 ma (3 ma non-oscillating).

INPUT SIGNAL LEVEL. The small meter, located on the lower left corner of the rear of the instrument, will provide a visual indication of the transmitter input signal level to the monitor. When an RF signal is connected to the RF INPUT terminal, this meter will show a deflection, provided the monitoring crystal is oscillating at the correct frequency and the harmonic multipliers are properly adjusted. These adjustments have been set at the factory for operation *at the specified transmitter frequency*, and will not normally require alteration.

The deflection obtained on the rear meter may be varied over a considerable range by rotation between the limits of MAX and MIN of the attenuator cylinder that forms the main body of the RF INPUT jack. The meter deflection should be set to approximately 100 (10 × 10) by means of this adjustment. Two friction clamping screws maintain sufficient pressure upon the adjustment device to guard against accidental turning. The clamping screws are accessible at the rear.

When the RF INPUT level has been set correctly, the SIGNAL pilot lamp on the panel and also the illumination lamps of the FREQUENCY DEVIATION meter, will glow with normal brilliance. These serve the purpose of continuously indicating normal operation of the monitor. Failure of either the RF INPUT from the transmitter or the monitoring crystal oscillator will cause these SIGNAL lamps to become very dim.

METER READINGS. *Center-Frequency Deviation:* The monitoring crystal oscillator should be permitted to operate for a period of about four hours following the initial installation in order that it reach final temperature and frequency stability before the indications of the meter can be considered normal.

Assuming that the monitor is fully stabilized, as noted above, the meter will indicate directly the deviation from the assigned transmitter frequency, if this is within the range of ±3000 cycles. Should the frequency deviation exceed this value, the meter will deflect off scale, provided that the frequency is within 120 kc of the assigned value. If the transmitter is more than 120 kc off frequency, the meter may give false indications. It is important, therefore, to determine the exact transmitter frequency, as precisely as possible, before using the deviation meter.*

Before reading the KILOCYCLES DEVIATION meter, the "electrical" zero setting of the circuit should be checked. Depress the CHECK ZERO push button near the lower right corner of the meter and hold it in. If the pointer fails to return to exact zero, remove the snap button located next to the upper right corner of the meter, and set the screwdriver adjustment until exact zero is obtained. The movement of the meter will be sluggish under these conditions; hence, it is best to make changes in the ZERO adjustment in small increments and allow sufficient time for the meter to reach its final setting. It is important that the transmitter be on when this check is made.

An adjustment for bringing the readings of the FREQUENCY DEVIATION meter into agreement with the results of an independent frequency check of the transmitter is provided on the front panel. The control located under the snap-button marked CENTER FREQUENCY, adjacent to the lower right corner of the meter, is used for this purpose. This adjustment has a useful range of ±3000 cycles, which provides a wider range than any long-term drifts in frequency will normally require.

CAUTION: *It is recommended that these adjustments be left undisturbed*

*By checking the transmitter frequency with Primary Measuring Service, described later (section 12.5).

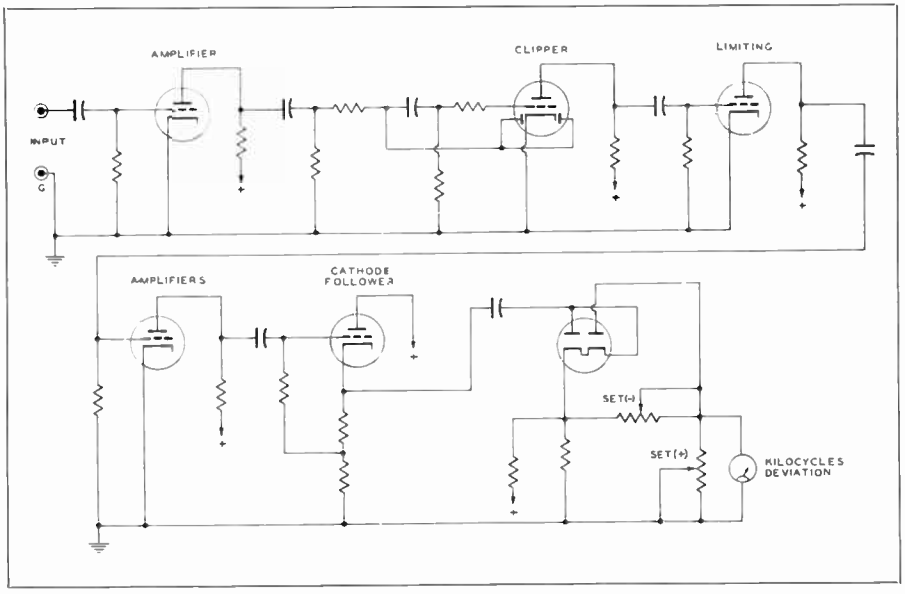

Figure 12.11. Elementary Schematic Diagram of Type 1176-AT (Visual Transmitter) Frequency Deviation Meter. Courtesy General Radio Co.

for a period of at least twenty-four hours after the initial installation, in order to permit the instrument to become thoroughly stabilized.

Modulation: The MODULATION meter will deflect up scale when modulation is applied to the transmitter. A MODULATION PEAKS switch, located in the lower right corner of the panel permits the meter response to be set for positive, negative, or full-wave modulation peaks.

It is important that the control marked ADJ. DIST. METER be set at the Monitoring position at all times, except when distortion or noise measurements are being made.

OVER MODULATION INDICATOR. An OVER MODULATION warning lamp, located near the center of the front panel, will flash whenever the modulation peaks exceed the setting on the MODULATION PEAKS dial. This dial may be set for any modulation level between the limits of 0 and 120 percent.

STAND BY OPERATION. When the transmitter is not operating, the monitor crystal oven should be left on to enable a quick return to service conditions. By throwing the MONITOR switch to OFF, all circuits except those required to maintain the temperature control of the crystal oven, will be shut off.

A return to normal operation, from the stand-by condition, merely requires throwing the MONITOR switch to ON, and allowing sufficient time for the tubes to warm up. Within a matter of minutes; all circuits will be sufficiently stabilized to operate normally, with the posible exception of the KILOCYCLES DEVIATION meter. This latter circuit may require approximately 15 minutes to approach final stability, which condition should be fully reached within an hour.

For short periods of broadcast interruption, lasting a few hours or less, it is advisable to permit the monitor to operate continuously.

A period of about four hours is required for the monitor to become stabilized from a condition of complete

shut-down including the crystal oscillator temperature control system.

The GR Type 1171-AT Visual Transmitter Frequency Monitor derives its reference frequency from the master crystal oscillator in the aural monitor and furnishes a signal to the frequency deviation meter of 1.75 kc plus or minus the frequency deviation of the visual transmitter carrier. Its operation is included in the diagram of Fig. 12.1F. The frequency deviation meter is the indicating device for the visual transmitter monitor. The elementary schematic diagram is shown by Fig. 12.1I. The circuit consists of (1) an input amplifier followed by (2) a series of clipping and limiting amplifiers and (3) a cycle-counter circuit used as a discriminator to drive the deviation indicating meter.

Changes in amplitude and waveform of the input signal do not affect the indication, and a well regulated power supply eliminates the effect of line voltage changes.

12.2 *Typical Daily Operations Procedures*

Transmitter operations may be roughly divided as follows: Pre-Sign on, regular operating day of program transmission, after sign-off shut-down period, and preventive maintenance which takes place after sign-off.

The sign-on man generally arrives at the transmitter one hour before the first test pattern signal is to be put on the air. In systems using water cooled tubes in the high-level stages, the water pumps are usually started before any other operation. In air cooled systems, the blowers are ordinarily actuated upon application of filament voltages. Any adjustable auto-transformers must be set on the tap giving the proper primary voltage indication for the particular installation, usually 230 volts.

Modern transmitter circuits employ an orderly control circuit system for two purposes: (1) to prevent improper transmitter functioning as to overloaded circuits or inadequate time-delays for application of high voltages, and (2) to protect the operating personnel from contacting high-voltage terminals. The former function also serves to prevent certain applications of potentials to elements not receiving normal flow of cooling medium such as water or air-stream. The functioning and operating sequence of control at any particular installation must be thoroughly familiar to the operators. A detailed analysis is included in a later section 12.4.

A typical sequence of operation is as follows: the START button is pressed which applies filament voltages to the tubes and starts a number of other relay circuits to functioning. Blower motors are started and, until the air stream is of sufficient strength to actuate mercury switches on the air vanes, full filament voltage is not applied. At the same instant, time-delay relay motors are started which do not close the high-voltage circuits until a specified time has elapsed, such as 30 seconds or one minute. Some transmitters employ "automatic" switches which automatically apply high voltages upon timing-out of the delay relay. When first placing the transmitter on the air, however, these switches are normally set to the "manual" position so that other adjustments may be made or checked before this occurs. Filament voltages should be checked on their respective meters and any adjustments made necessary to bring the potentials to normal value. Door interlock switches also prevent application of high voltage if any door is open in a cubicle containing high voltage. An open door also usually actuates grounding switches which short the high-voltage supplies to ground so that large capacitors cannot discharge through an operator's body to ground.

After all filament meters have been checked and normal operation obtained, the low voltages are usually applied to the video amplifier stages and RF exciter stages. This permits checking their operation before application of high voltages to the final stage or se-

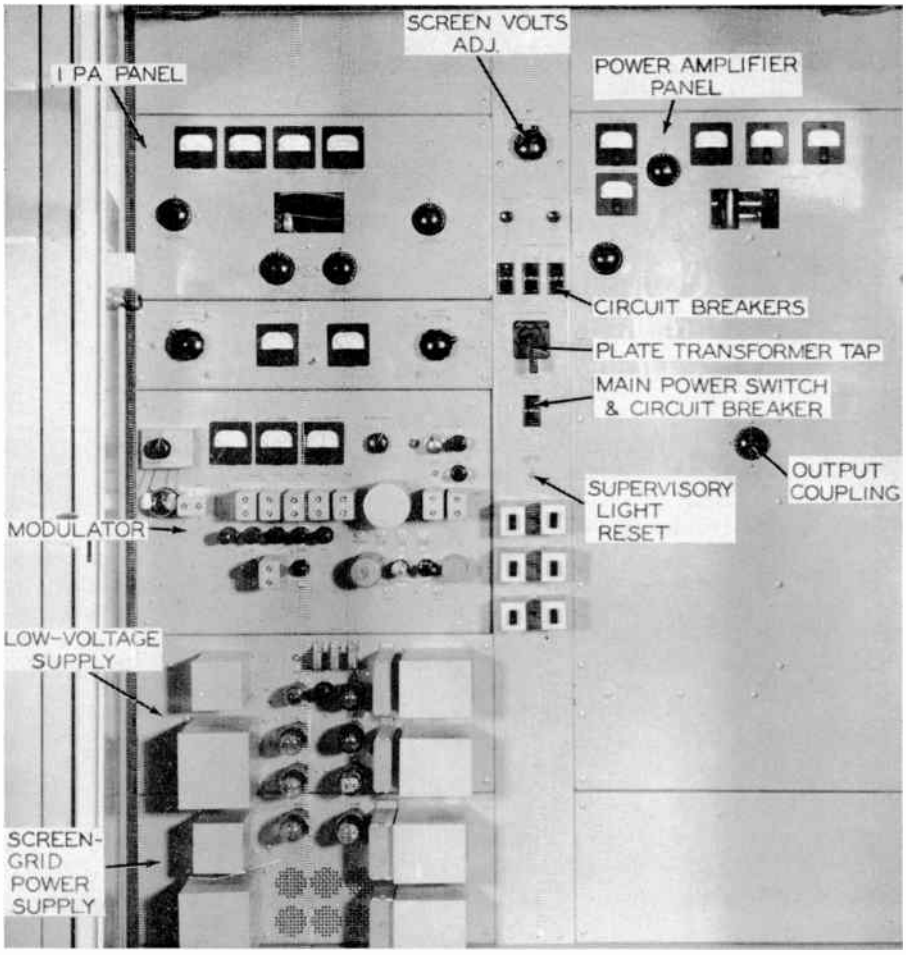

Figure 12.2A. Panel, Aural Transmitter Type 4TT8A1. Courtesy G. E.

ries of high-level linear amplifiers. Any necessary adjustments such as touch-up of tuning controls are made and grid current of high-level stage is observed to ascertain normal driving power to that stage before application of the final high voltage.

Figs 12.2A and 12.2B illustrate the aural and visual panel controls and meters for one type of General Electric TV Transmitter.

When the operator is assured that the transmitter is functioning properly into the antenna system, he generally removes the high voltage and places the dummy load on the final in lieu of the antenna. He is then in a position to check performance with test signals either from equipment at the transmitter or from the studio line. These tests include test pattern signals, checking of waveform from the studio and after passing through the transmitter, adjustment of video and audio levels, etc.

Due to the nature of the FM aural transmission, some operators are confused at first on obtaining proper interpretation of the aural modulation monitor meter readings. It is recalled

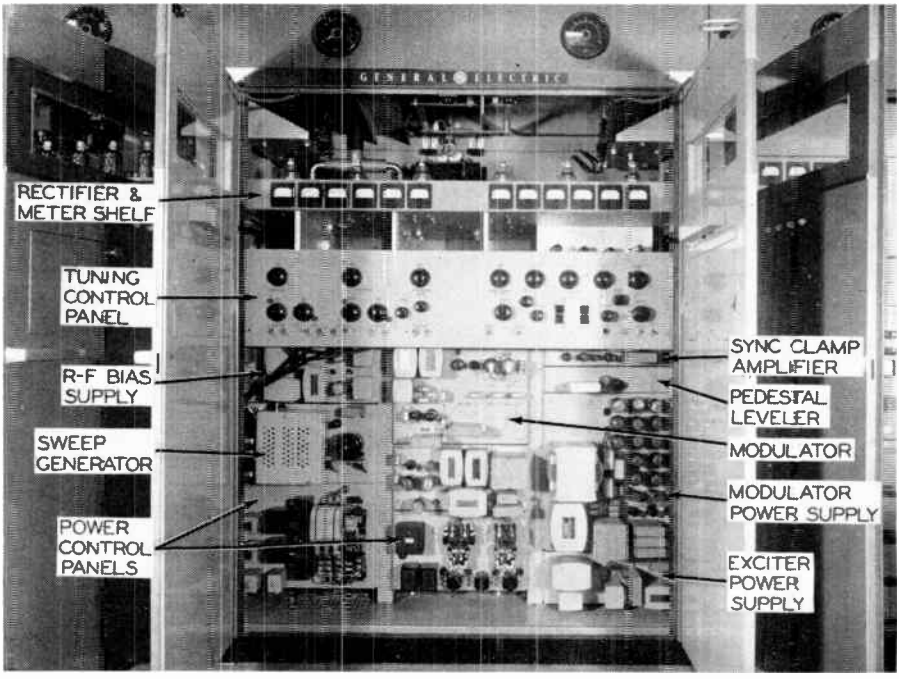

Figure 12.2B. Center Cubicle Visual Transmitter, G. E. Type TT-6-C. Courtesy G. E.

that pre-emphasis of the audio spectrum in accordance with the graph of Fig. 12.2C is used at the input of the aural transmitter. The monitor circuit which provides audio voltage to drive the sound monitoring amplifiers then includes a de-emphasis circuit to restore the audio amplitude-frequency curve to normal value. It must be remembered, however, that some modulation meters *show percentage of modulation in terms of this pre-emphasis curve,* which means that about 17 db less audio is required at 15,000 cps pure tone to modulate the transmitter 100% than at any pure tone below approximately 400 cps. This action in terms of average program material should be taken into consideration by the operator. A program which has a number of highs in the signal content should modulate the transmitter 100%. However, film or recordings often contain sound which is definitely lacking in highs, and 100% modulation will cause noticeable distortion in lows due to the overloaded condition in the audio amplifiers of the station and especially in the receiver circuits following de-emphasis. Voice transmission should seldom exceed 50 to 60% modulation. The studio operator is peaking his meter close to 100% indication, but the transmitter modulation indication cannot be expected to follow the studio meter under all program conditions.

While the transmitter is on the air a competent operator will be continually alert to picture quality, waveform as to level, amount of *setup* and proper sync-to-blanking ratio, meter readings, temperatures, and even to his *sense of smell.* As he walks up and down the transmitter to observe the meters and make adjustments on the line-voltage auto-transformer, he is sensitive to the characteristic operating odors of resistors, relay solenoids, capacitors and transformers. This practice often indicates the general location of an impend-

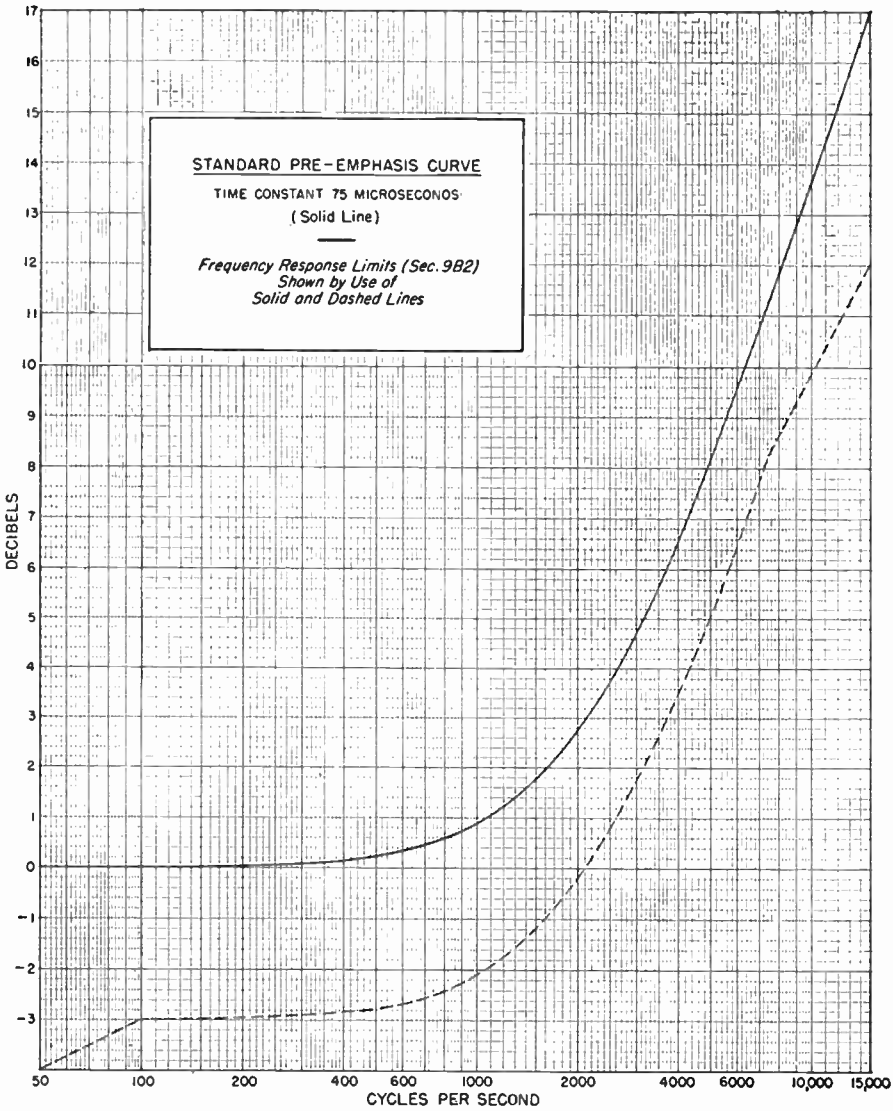

Figure 12.2C. Standard Pre-Emphasis Curve. Fram FCC Standards.

ing outage even if visual observation is impossible due to location of the component. Meeting emergencies is more fully discussed in section 12.5.

Meter readings must be recorded on the transmitter log at 30 minute intervals. These are outlined in the Appendix under FCC Rules and Regulations.

After sign-off the high voltage is removed and rear doors opened for visual observation of all components. The operator should, at this time, become thoroughly familiar with the *feel* of filament, grid and anode connections of high-level stages, important capacitors and other components where temperature indication as revealed by the feeling process is important in case of

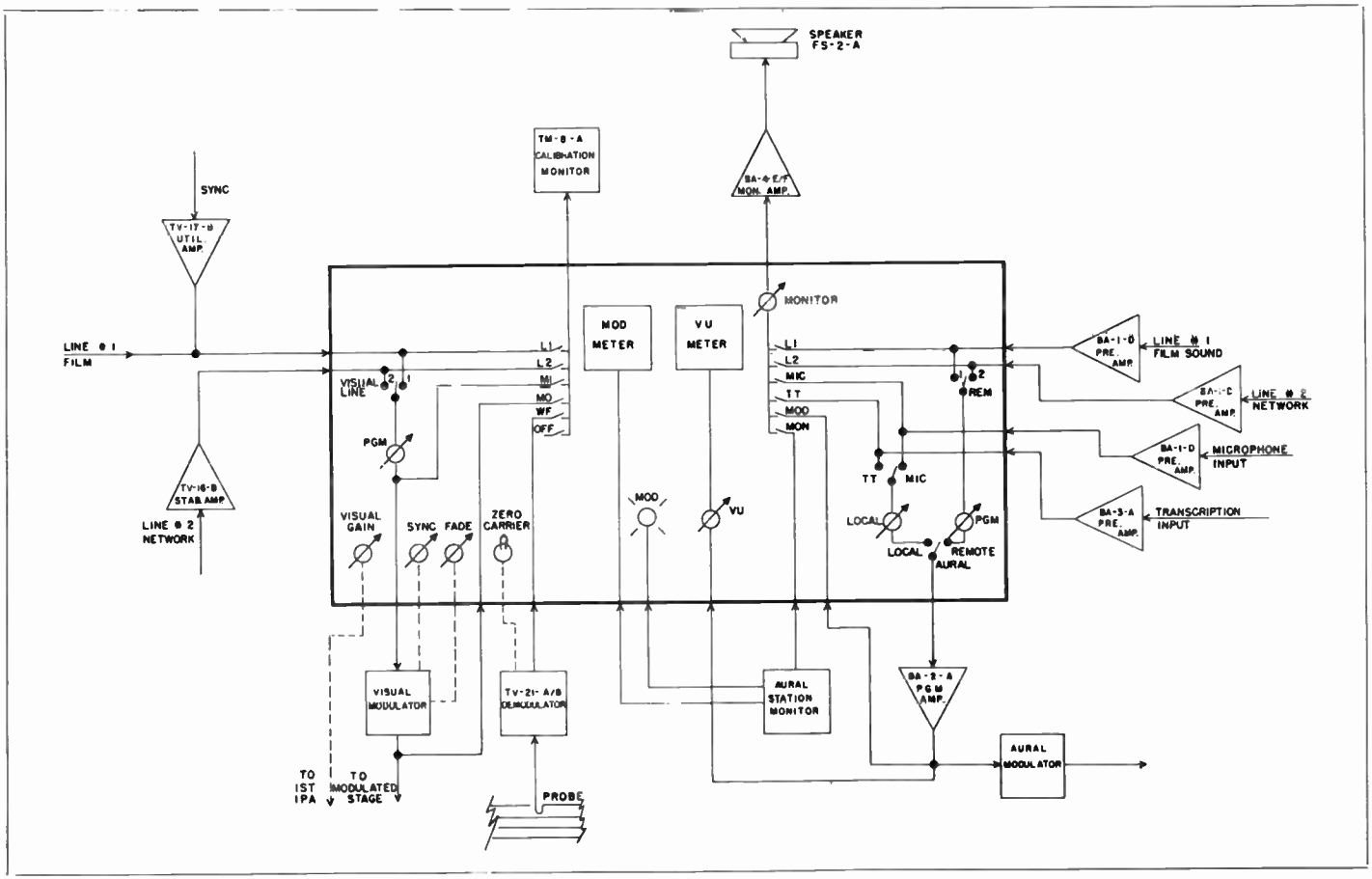

Figure 12.3A. Block Diagram, Transmitter Control panel. Courtesy G. E.

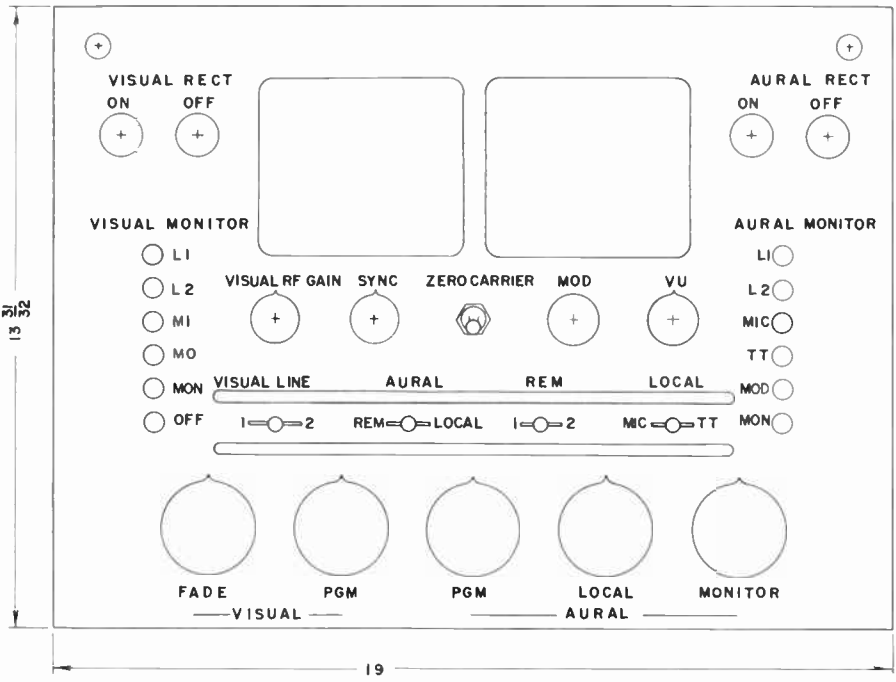

Figure 12.3B. Outline Drawing, Transmitter Control Panel.

trouble or impending failure. He should ALWAYS ascertain that interlock switches and high-voltage shorting relays are properly functioning before touching any component.

After shutting off the low voltage and filament potentials, blower motors or water-cooling systems sometimes continue to operate by "keep-alive" relays for a specified time to cool the high-level tubes. This time is generally 4 to 7 minutes, after which interval they open the circuits automatically. This is the close of the operating day and the start of any preventive maintenance schedules.

12.3 Transmitter Control Position

Most commercial transmitter installations incorporate a control panel position where all necessary controls and monitor switching are localized for convenient and efficient operation. The control panel sometimes incorporates program switching facilities where installations are combined with film rooms, or where the "master control" is actually at the transmitter location.

To familiarize the reader with the operational use of such equipment, a description follows of the General Electric transmitter control panel.* Fig. 12.3A is the block diagram, and Fig. 12.3B shows the operational controls discussed in the following paragraphs.

The transmitter Control Panel consists of a flat rectangular metal panel designed for mounting in a G-E Type PR-17-A Top Cabinet. All operating controls are located on the front. Rectifier push buttons are illuminated indicating the active circuit. All controls are plainly marked. Where possible, all components are identified on the rear of the panel by their symbol number.

---

*Drawings and technical data furnished by courtesy of General Electric.

Wiring and connections are accessible from the rear, there being no voltages available on the front. All DC and AC control voltages are brought into the panel through multi-connector Jones plugs located on a hinged terminal panel mounted to the rear of the Control Panel for easy accessibility.

Aural and visual rectifier push button on-off switches permit individual control of the high voltage to the visual and aural transmitters.

Two six-position mechanically interlocked switches permit separate visual and aural monitor switching. Preset level controls are bridged across each audio line. Monitoring controls permit checking visual and aural inputs and their respective RF outputs.

Separate lever keys allow selection of either of two input aural and visual lines for broadcasting. Two additional lever keys on the audio inputs select either remote or local operation, and of local operation, either turntable or microphone.

Name	*Function*

OPERATION

The following is a list of the controls and their function on the Transmitter Control Panel:

1. VISUAL CONTROLS

Name	*Function*
VISUAL RECT	
ON	Applies HV (high-voltage) to the Visual Transmitter.
OFF	Turns off HV to the Visual Transmitter.
VISUAL MONITOR	Monitor selector switch with the following positions available:
OFF	Cuts switch 4S7 OFF.
MON	Demodulator selector button.
MO	Modulator output selector button.
MI	Modulator input selector button.
L2	Selector button for input line 2.
L1	Selector button for input line 1.
FADE	A remote control for the visual modulator that permits fading the picture to black level.
SYNC	A remote control for the visual modulator that permits adjusting the amount of sync in the composite output of the modulator. It should be set at 25 percent of the peak RF signal as measured on the Calibration Waveform Monitor. Once set, the modulator will tend to maintain a fixed sync amplitude for considerable variation of input sync.
VISUAL RF GAIN	A remote gain control. It adjusts the screen voltage in the 1st IPA Stage, thereby adjusting the transmitter peak output without significant change in the percent modulation or percent black level. This control should be used to readjust the transmitter peak output to compensate for line voltage variations. The peak output would be read on the visual peak RF meter on the transmitter.
PGM	A 75/75 ohm bridged T video attenuator which permits adjustment of the visual program bus level over a 25 db range. With the RF blanking level properly set, this control provides an independent adjustment of the depth of modulation on white peaks. The control should be set so that reference white coincides with the desired maximum depth of

Name	*Function*
	modulation. The depth must be set below 15 percent of peak RF signal and is usually held between there and 10 percent. The desired level can be established by using the Calibration Waveform Monitor.
VISUAL LINE 1 - 2	A two-position selector switch ahead of the PGM attenuator that permits selecting either of the two input video lines for connection to the transmitter.
SCREWDRIVER ADJUSTMENTS	These are 150-ohm potentiometers each of which is shunted by a 150-ohm resistor. They are used to preset the levels of their associated circuit to the same value so that approximately equivalent displays will be had on the Calibration Monitor when switching from one signal to another. 4R45 and 4R46 permit adjustment of the terminating resistance presented at 4J7 and 4J3, respectively, from 60-80 ohms.
ZERO CARRIER	Turns the zero carrier level marker in the Demodulator on or off. The zero carrier marker is used to establish the various levels of the detected video signal. For critical examination of the vertical back porch it should be off.
2. AURAL CONTROLS	
AURAL RECT.	
ON	Applies HV to the Aural Transmitter.
OFF	Cuts off HV to the Aural Transmitter.
AURAL MONITOR	Monitor selector switch with the following positions available:
L1	Selector button for input line 1.
L2	Selector button for input line 2.
MIC	Microphone selector button.
TT	Transcription selector button.
MOD	Aural Modulator input selector.
MON	Aural Station Monitor selector.
MONITOR	Sets the signal level to the monitoring loudspeaker.
LOCAL	Adjusts the level of the transcription and microphone input circuits.
PGM	Adjusts the level of the Line 1 and Line 2 inputs.
LOCAL MIC-TT	Microphone or Turntable selector.
REM 1 - 2	Line 1, Line 2 selector.
AURAL REM-LOCAL	Remote or local selector switch located following the two level controls PGM and LOCAL.
MOD	Indicates (flashes) when the modulation of the Aural Transmitter exceeds any preset level between 50 to 120 percent.
VU	A db multiplier control calibrated for determining the scale reading of the VU meter.
SCREWDRIVER CONTROLS	These potentiometers for adjusting circuit levels to approximately the same monitoring speaker output. They are bridged across their respective monitoring circuit.

3. PROGRAMMING

The programming facilities provide separate switching of two composite video lines and two audio lines. By using external equipment an extra audio-video output can be made available for feeding a network line or driving recorders with the program being broadcast.

When the monitor is switched to either of the visual lines, the level as measured by the Calibration Monitor is proportional to that directly on the line selector switch. When the picture signal levels are matched on both lines prior to the switching, the outgoing levels should remain the same.

Before switching into either visual line, it should be monitored on the Calibration Monitor for picture quality and signal level. To do this push the L1 or L2 button on the VISUAL MONITOR switch, whichever is appropriate. Adjust the signal level to that standard selected for station operation by properly setting the level controls on the driving Stabilizing Amplifier, Utility Amplifier or signal source.

To minimize switching transients in the picture, use the FADE control to first fade the picture to black then select the other line and fade up. To observe the effect on the Calibration Monitor the VISUAL MONITOR selector switch button MO or MON should be punched.

For simultaneous switching of the aural part of the program, AURAL REM-LOCAL switch must be on REM. Then at the same time the selection is made with the VISUAL LINE switch, operate the REM switch. To monitor the aural selection push the MOD or MON push button on the AURAL MONITOR switch down.

The illuminated VU Meter is for checking the Aural Transmitter input level. Normally the meter will indicate peaks in the neighborhood of 0 for 100 percent modulation with the switch VU set on the +4 VU scale when used without a limiter. The scale markings on the switch indicate the level of a test signal in dbm for which the meter will read zero VU across a 600-ohm circuit.

4M2 is a percent modulation meter as measured by the Aural Station Monitor. The modulation on the peaks should be as near 100 percent (±25 kc swing) as possible.

The aural section can be interrupted anytime independently for station identification or local commercials by throwing the AURAL switch to LOCAL and the LOCAL switch to either TT (Transcription) or MIC (Microphone) as desired.

The approximate signal level on any aural line can be determined before switching into it by connecting into the monitoring load speaker system after the line level potentiometers have been properly adjusted with test signals. A PGM gain control sets the output level. Riding the level controls should never be necessary. Occasional readjustment of the level controls should maintain a satisfactory level for all four lines.

4. MEASUREMENTS

The following method is suggested for using the Calibration Monitor to measure input composite video signal levels.

Step 1. Determine or adopt a nominal operating picture signal level at the point of switching, which is to be the standard for the station. Normally this lies between 0.5 volt and 2.5 volts. For example, using a 1.4 volt level, i.e., 1.0 volts picture plus 0.4 volts sync, the monitor bridging loss is 5/1 so the nominal monitoring level would be 0.2 volt picture plus 0.08 volt sync.

Step 2. Calibrate the monitor so that the chosen monitoring amplitude from blanking to reference white (i.e., 0.2 volt) is 10 percent. The blanking part of the calibration pulse is used as a marker.

Step 3. To preset the level on an incoming line, switch it into the monitor leaving the calibration pulse controls alone and disregard sync height. Adjust the line level until the white peaks run reasonably close to the established ref-

erence white. The level of the white peaks in percent can also be set to correspond exactly with those at the program source by having an operator at the source "call peaks" in percent reference white and adjusting the incoming signal level to match.

Step 4. To measure white level on a video signal, adjust the percentage control on the monitor so that the blanking part of the pulse matches the white peaks. Read the white level directly on the dial of the percentage control. This reading is in percent of reference white level, since the scale reading of 100 was chosen to represent 100 percent of reference white. A typical value is about 90.

Step 5. Similarly, to measure black level on a video signal, adjust the calibrator so that the blanking portion of the pulse matches the deflection level of the black peaks. Then read the black level on the scale of the calibrator in percent of reference white level. A typical value is about 10.

Step 6. To measure sync height adjust the calibrator so that the sync portion of the pulse matches blanking level. Read the sync height on the scale of the calibrator. A recommended RMA signal has a sync height of 40 percent of reference white.

C. The following method is suggested for using the Calibration Monitor to measure the demodulated RF signals:

Step 1. Calibrate the monitor so that 100 percent corresponds to the amplitude from sync peak to zero modulation as indicated by the Demodulator, using the right hand scale on the monitor tube face. The sync part of the calibration pulse is used as the marker in this instance.

Step 2. To measure white level on the demodulated signal, adjust the percentage control on the monitor so that the sync part of the pulse matches the white peak. Read the white level directly on the dial of the PERCENTAGE control in percent of full modulation for which a scale reading of 100 was chosen. A typical value for white level is 87.5 percent, corresponding to the 12.5 percent of sync peak level marked on the right hand side of the waveform monitor scale. The RMA standard value is 12.5 percent ±2½ percent of sync peak, i.e., 87½ percent ±2½ percent of full modulation.

Step 3. To measure blanking level set the PERCENTAGE control so that the sync part of the pulse matches blanking level. Read the blanking level on the dial of the calibrator PERCENTAGE control in percent of full modulation. The FCC standard value for blanking level is 25 percent of full modulation, which is equivalent to 75 percent of sync peak level.

D. The Calibration Monitor may be used to monitor white level continuously on either a composite video or a demodulated RF signal. The calibration marker pulse can be set to reference white or to a desired percentage of reference white, as described previously and permitted to ride steadily in the signal. Then the line level should be readjusted as required to match white peaks with the marker. If the demodulator appreciably compresses the whites in a demodulated RF signal, the marking pulse should be set to a correspondingly higher percent of full modulation, as read on the PERCENTAGE dial.

E. Use of the marker pulse in preference to the CR tube scales for checking levels has the special advantage of eliminating paralax and amplifier linearity errors.

12.4 Transmitter Control Circuits

A good practical conception of the control circuits are mandatory for operation and emergency procedures (section 12.5). A number of different colored pilot lights are used in conjunction with the control functions to indicate either normal or abnormal operation of various portions of the transmitter to facilitate analysis of any malfunctioning.

Contactors and relays which are the moving parts of the control circuits contain contacts which close or open circuits in either normally closed or

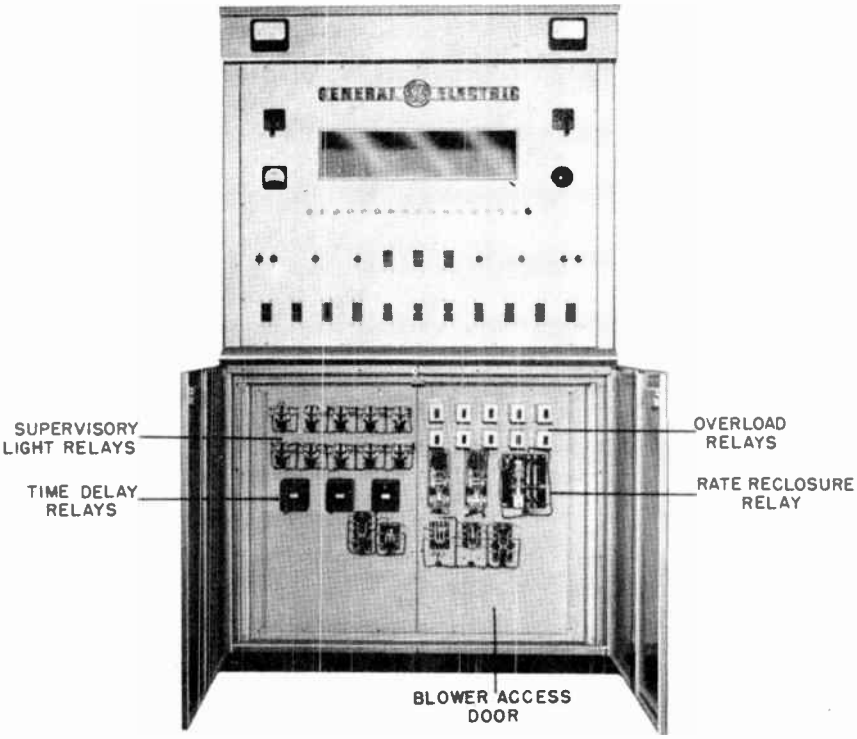

Figure 12.4A. Front View of Rectifier and Control Cubicle with access doors open, Type TT-10-A Television Transmitter.

normally open position. Details of transmitter-type relays are included in section 12.6B under preventive maintenance of such equipment.

The location of supervisory light relays, overload relays, time delay relays, and rate-reclosure relay on the rectifier and control cubicle of the GE TT-10-A transmitter is illustrated in Fig. 12.4A. This transmitter was described in the preceding chapter and the readers' understanding is not complete without an analysis of the associated control circuits described in the following paragraphs.* The importance of this analysis is emphasized in certain emergency procedures (section 12.5).

1. GENERAL. Front-of-panel control is provided for the filament and low-voltage supplies. Adjustment of the high-voltage supplies is accomplished through changing taps on the two high-voltage transformer primary windings.

All relays and contactors, with the exception of overload relays and filament interlock relays, operate from a 115-volt transformer 2T26 (Fig. 12.4B) with one side grounded. All relays with more than 115 volts on their terminals are located within the cubicles and are not accessible when the Transmitter is operating.

The rear doors of all cubicles are equipped with suitable interlocks to remove power from all power supplies. In addition, high-voltage grounding switches short the high-voltage supplies to ground and short-circuit the secondary windings of the high-voltage transformers.

*Ctsy General Electric.

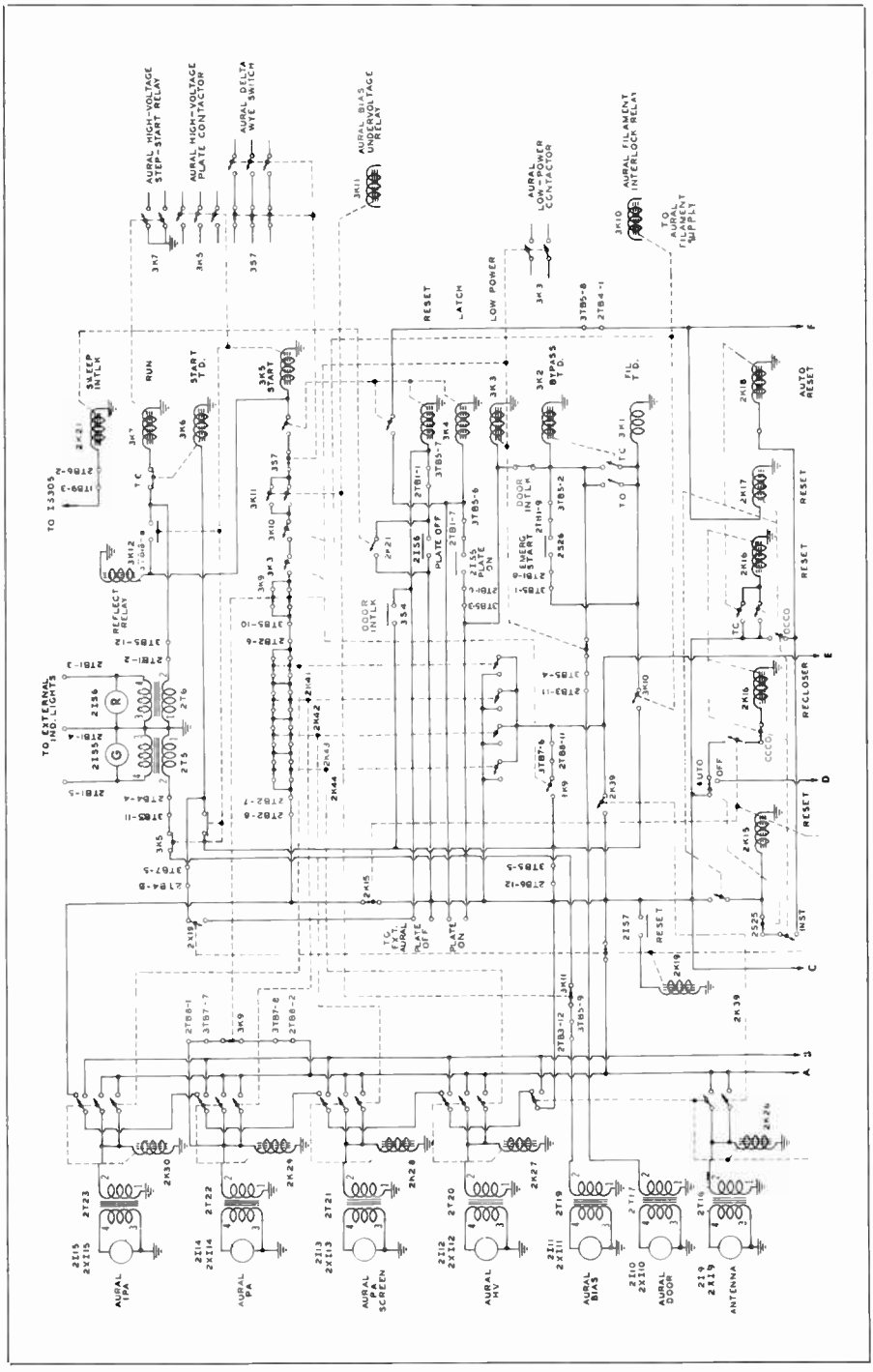

Figure 12.4B. Elementary Diagram, Central Circuits of Type TT-10-A Television Transmitter.

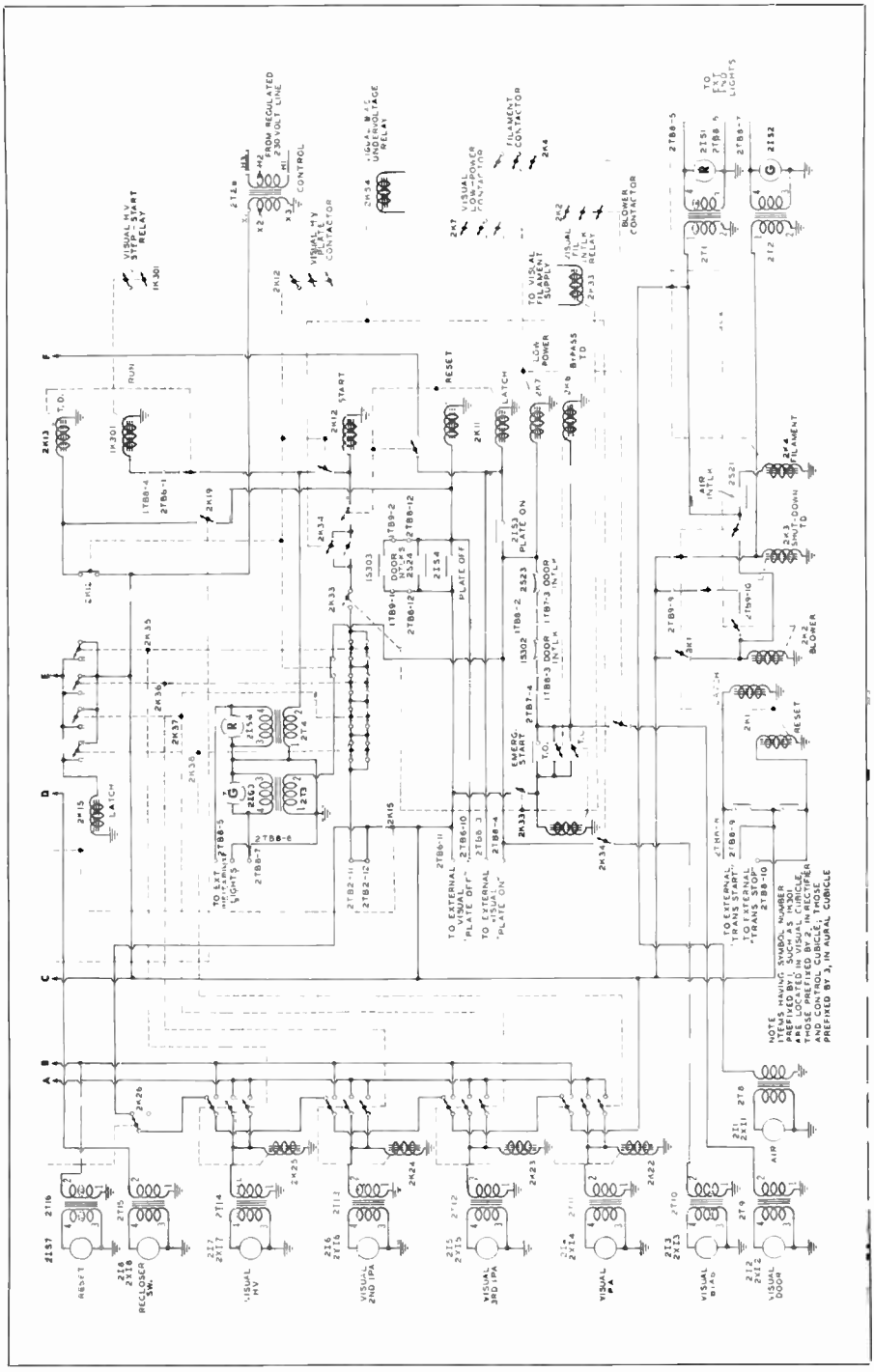

Figure 12.4B. Elementary Diagram, Control Circuits of Type TT-10-A Television Transmitter.

Circuit protection is provided by direct-current overload relays and magnetically-operated circuit breakers. A system of supervisory lights indicate the operation of the DC overload relays as well as certain other circuit conditions.

Transmitter start-stop and plate on-off push buttons are provided with internal lights to indicate circuit status.

The indicating light color selection is such that green always indicates ready. It shows that power is available and the starting sequence has been completed up to that point. Red shows that the circuit is energized and is in operation. White indicates an abnormal condition such as an overload, open door, etc. During normal operation only the red lights should be illuminated.

Automatic power failure restart and plate overload reclosure with automatic reset is provided for both aural and visual sections.

2K34, 2K35, 2K43, 2K44, and 3K11 are DC operated relays. Other relays and contactors are AC operated.

The transmitter start relay, 2K1, the low-voltage plate start relay, 2K11, the visual transmitter start relay, 2K15 and the aural transmitter start relay, 3K4, are latching type relays. When the latch-in coil is energized momentarily, the operating mechanism is held in the closed position by a mechanical latching device. When the reset coil is energized momentarily, the mechanical latching device is tripped, opening the relay.

The reclosure relay 2K16 is the cycling type. Each time the cycling coil is momentarily energized the relay advances one step until the final step is reached. There are four stepping positions. When the reset coil is energized, the relay returns to its starting position.

Items having symbol numbers prefixed by 1, such as 1K301, are located in Visual Cubicle; those prefixed by 2, in Rectifier and Control Cubicle; those prefixed by 3, in Aural Cubicle. Schematic, Fig. 12.4B.

2. CONTROL CIRCUIT COMPONENTS AND THEIR FUNCTION

Component	*Name*	*Function*
2I1	AIR supervisory light	2I1 is energized when air interlock switch 2S21 is open, preventing filament contactor 2K4 from operating.
2I2	VISUAL DOOR supervisory light	2I2 is energized when the rear door of either the Rectifier and Control Cubicle or Visual Cubicle is open preventing low-power contactor 2K7 from operating.
2I3	VISUAL BIAS supervisory light	2I3 is energized when bias under-voltage relay 2K34 is not energized thus preventing application of plate voltage. It also indicates failure of bias voltage.
2I4	VISUAL PA overload supervisory light	2I4 is energized after each operation of visual PA DC overload relay 2K38. It indicates momentary abnormal cathode of visual PA.
2I5	VISUAL 3RD IPA overload supervisory light	2I5 is energized after each operation of the visual 3RD IPA DC overload relay 2K37. It indicates momentary abnormal cathode current of visual 3RD IPA.

Component	*Name*	*Function*
2I6	VISUAL 2ND IPA overload supervisory light	2I6 is energized after each operation of the visual 2ND IPA DC overload relay 2K36. It indicates momentary abnormal cathode current of visual 2ND IPA.
2I7	VISUAL HV overload supervisory light	2I7 is energized after each operation of the visual high-voltage DC overload relay 2K35. It indicates momentary abnormal load on the high-voltage supply.
2I8	RECLOSURE switch supervisory light	2I8 is energized when the AUTO RECLOSURE circuit switch 2S25 is in the OFF position as a reminder that the plate reclosure circuit is inoperative.
2I9	ANTENNA supervisory light	2I9 is energized after each operation of the antenna overload relay 2K39. It indicates abnormal VSWR on the transmission line at the output of the aural section.
2I10	AURAL DOOR supervisory light	2I10 is energized when the rear door of the Aural Cubicle is open, preventing low-power contactor 3K3 from operating.
2I11	AURAL BIAS supervisory light	2I11 is energized when bias undervoltage relay 3K11 is not energized preventing application of aural plate voltage. It indicates failure of the bias voltage.
2I12	AURAL HV overload supervisory light	2I12 is energized after each operation of the aural high-voltage DC overload relay 2K44. It indicates momentary abnormal load on the high-voltage supply.
2I13	AURAL PA SCREEN overload supervisory light	2I13 is energized after each operation of the aural PA screen DC overload relay 2K43. It indicates momentary abnormal PA screen current.
2I14	AURAL PA overload supervisory light	2I14 is energized after each operation of the aural PA DC overload relay 2K42. It indicates momentary abnormal cathode current of aural PA.
2I15	AURAL IPA overload supervisory light	2I15 is energized after each operation of the aural 2nd IPA DC overload relay 2K41. It indicates momentary abnormal cathode current of the aural 2nd IPA.
2IS1	TRANSmitter STOP push button	Momentary contact of 2IS1 energizes the reset coil of latch relay 2K1.
2IS2	TRANSmitter START push button	Momentary contact of 2IS2 energizes the latch in coil of the latch relay.

Component	*Name*	*Function*
2IS3	VISUAL PLATE ON push button	Momentary contact of 2IS3 energizes the latch in coil of latch relay 2K11.
2IS4	VISUAL PLATE OFF push button	Momentary contact of 2IS4 energizes the reset coil of latch relay 2K11.
2IS5	AURAL PLATE ON push button	Momentary contact of 2IS5 energizes latch in coil of latch relay 3I4.
2IS6	AURAL PLATE OFF push button	Momentary contact of 2IS6 energizes the reset coil of latch relay 3K4.
2IS7	Supervisory light RESET push button	Momentary contact of 2IS7 energizes supervisory light reset relay 2K19.
2K1	Transmitter start-stop latch relay	2K1 energizes blower contactor 2K2 and filament contactor 2K4 when in latch position. In reset position, it energizes shut-down time-delay relay 2K3.
2K2	Blower contactor	2K2 energizes the blower motor 2BM1.
2K3	Shut-down time-delay relay	2K3 provides a 3-minute time delay in de-energizing the blower motor after the filaments have been de-energized.
2K4	Filament contactor	2K4 energizes all filament transformers.
2K5	Visual filament time-delay relay	2K5 delays application of plate power for 30 seconds after the application of filament power.
2K6	Visual filament time-delay bypass time-delay relay	2K6 provides a 2-second delay in drop out of the filament time delay circuit should a momentary power failure occur. It permits instant re-application of plate power within this time.
2K7	Visual low-power contractor	2K7 energizes the visual low-voltage supply (+400 V) visual modulator supply (+300 V), modulator regulated supply (—300 and —405 V) and the visual bias supply.
2K11	Visual plate-on latch relay	2K11 energizes plate contactor 2K12 when in the latch position.
2K12	Visual plate contactor	2K12 energizes the visual high-voltage transformer. Interlocks de-energize the plate-on push button light and the plate step-start time-delay relay 2K13.
2K13	Visual plate step-start time-delay relay	2K13 provides one-second time delay for closing of step-start relay 1K301 after the plate contactor 2K12 is energized.

Component	*Name*	*Function*
2K15	Plate reclosure auxiliary latch relay	2K15 opens the plate contactor circuit of the section in which the overload relay operates and energizes the plate reclosure relay 2K16 whenever an overload relay operates the latch-in coil.
2K16	Plate reclosure relay	2K16 operates through one latch position each time the auxiliary relay 2K15 operates, resetting 2K15 twice and remaining in lock-out position after the third operation.
2K17	Plate reclosure manual reset relay	2K17 operates when either the aural or visual plate-on push button is depressed. It energizes the reset coil of the plate reclosure relay 2K16.
2K18	Plate reclosure automatic reset relay	2K18 is energized when the plate reclosure relay is in 2nd or 3rd position. After ten seconds delay the contact closes energizing the reset coil on the plate reclosure relay 2K16.
2K19	Supervisory light reset relay	2K19 de-energizes any supervisory light relay which has been sealed in by an overload relay operation; thus extinguishing it.
2K21	Sweep interlock relay	2K21 is energized when 1S395 is in SWEEP or SET MARKERS position. Contacts operate the aural plate off circuit to prevent the possibility of the aural RF power damaging the visual sweep detector during visual circuit alignment.
2K22	Visual PA supervisory light relay	2K22 is energized by 2K38. It seals in energizing the visual PA supervisory light transformer 2T11.
2K23	Visual 3rd IPA supervisory light relay	2K23 is energized by 2K37. It seals in energizing the visual 3rd IPA supervisory light transformer 2T12.
2K24	Visual 2nd IPA supervisory light relay	2K24 is energized by 2K36. It seals in energizing the visual 2nd IPA supervisory light transformer 2T13.
2K25	Visual HV supervisory light relay	2K25 is energized by 2K35. It seals in energizing the visual HV supervisory light transformer 2T14.
2K26	Antenna supervisory light relay	2K26 is energized by 2K39. It seals in energizing the antenna supervisory light transformer 2T17.
2K27	Aural HV supervisory light relay	2K27 is energized by 2K44. It seals in energizing the aural HV supervisory light transformer 2T20.

Component	*Name*	*Function*
2K28	Aural PA screen supervisory light relay	2K28 is energized by 2K43. It seals in energizing the aural PA screen supervisory light transformer 2T21.
2K29	Aural PA supervisory light relay	2K29 is energized by 2K42. It seals in energizing the aural PA supervisory light transformer 2T22.
2K30	Aural IPA supervisory light relay	2K30 is energized by 2K41. It seals in energizing the aural IPA supervisory light transformer 2T23.
2K33	Visual filament interlock relay	2K33 is energized by the visual filament circuit. It prevents application of power to the filament time-delay relay 2K5 and interlocks the plate contactor circuit before the filament circuit is energized.
2K34	Visual bias undervoltage relay	2K34 prevents the plate contactor 2K12 from operating before the bias voltage is established.
2K35	Visual HV overload relay	When energized, 2K35 opens the visual plate contactor circuit, operates the plate reclosure circuit, and energizes its associated supervisory light circuit.
2K36	Visual 2nd IPA overload relay	Same as for 2K35.
2K37	Visual 3rd IPA overload relay	Same as for 2K35.
2K38	Visual PA overload relay	Same as for 2K35.
2K39	Antenna overload relay	2K39 energizes 2K15 which opens the plate contactor circuit of both the aural and visual sections. Also, it energizes its associated supervisory light circuit.
2K41	Aural IPA overload relay	When energized, 2K41 opens the aural plate contactor circuit, operates the plate reclosure circuit, and energizes its associated supervisory light circuit.
2K42	Aural PA overload relay	Same as for 2K41.
2K43	Aural PA screen overload relay	Same as for 2K41.
2K44	Aural HV overload relay	Same as for 2K41.
2S21	Air interlock switch	Located in the air duct, it is operated by air flow. It acts to prevent application of filament and plate power when there is insufficient air flow.
2S22	VISUAL EMERGENCY START switch	Momentary contact of 2S22 by-passes filament time-delay relay 2K5, sealing in by-pass time-delay relay 2K6. This per-

Component	Name	Function
		mits emergency application of plate power in less than 30 seconds after a power failure.
2S23 and 2S24	Rectifier and Control Cubicle door interlock switch	2S23 and 2S24 de-energize the low-power contactor 2K7 when the cubicle rear door is open and also operates the visual HV plate off circuit.
2S25	PLATE RECLOSURE switch	When in the OFF position, it prevents the plate reclosure circuit from operating and energizes the reclosure switch supervisory light transformer 2T15.
2S26	AURAL EMERGENCY START switch	Momentary contact of 2S26 by-passes the filament time-delay relay 3K1 sealing in by-pass time delay-relay 3K2. This permits emergency application of plate power in less than 30 seconds after a power failure.
1K301	Visual high-voltage step-start relay	1K301 short-circuits the step-start resistors in series with the HV power supply filter capacitors approximately one second after the plate contactor closes. This prevents a heavy charging surge through the rectifier tubes.
1S302	Visual cubicle door interlock switch	1S302 de-energizes the low-power contactor 2K7 when the cubicle rear door is open.
1S303	Visual cubicle door interlock switch	1S303 operates the visual HV plate off circuit when the cubicle rear door is open.
3K1	Aural filament time-delay relay	3K1 delays application of plate power for 30 seconds after the application of filament power.
3K2	Aural filament time-delay by-pass time-delay relay	3K2 provides a two-second delay in the drop out of the filament time-delay circuit during a momentary power failure. It permits instant re-application of plate power within this time limit.
3K3	Aural low power contactor	3K3 energizes the aural low voltage and bias supplies.
3K4	Aural PLATE ON latch relay	3K4 energizes the plate contactor, 3K5, when in the latch position.
3K5	Aural plate contactor	3K5 energizes the aural high-voltage transformer. It interlocks with the plate on push button light, the plate step-start time-delay relay, 3K6, and energizes the plate off push button light.

Component	*Name*	*Function*
3K6	Aural plate step-start time-delay relay	3K6 provides a one-second time delay for closing of the step-start relay 3K7 after the plate contactor 3K5 is energized.
3K7	Aural high-voltage step-start relay	3K7 short circuits the step-start resistors in series with the HV power supply filter capacitor approximately one second after the plate contactor closes. It prevents a heavy charging surge through the rectifier tubes.
3K9	Aural PA differential relay	3K9 operates by differential action due to excessive unbalance of the cathode currents of the aural PA tubes. When energized, it opens the aural plate contactor circuit, operates the plate reclosure circuit and energizes its associated supervisory light circuit.
3K10	Aural filament interlock relay	3K10 is energized by the visual filament circuit. It prevents the application of power to the filament time-delay relay 3K1 and interlocks the plate contactor circuit before the filament circuit is energized.
3K11	Aural bias undervoltage	3K11 prevents the plate contactor 2K12 from operating before bias voltage is established.
3K12	Reflectometer relay	3K12 removes the plate voltage from the reflectometer amplifier when the plate contactor 3K5 is de-energized. This insures positive drop-out of the antenna overload relay 2K39 after the antenna overload condition appears.
3S4	Aural cubicle door interlock switch	3S4 operates the aural plate off circuit when the cubicle rear door is open.
3S5	Aural cubicle door interlock switch	3S5 de-energizes the low-power contactor 3K3 when the cubicle rear door is open.

3. STARTING SEQUENCE

Assuming that all circuit breakers on the Rectifier and Control cubicle are closed, the starting sequence is as follows:

Pressing the green TRANS START push button 2IS2 energizes the latch coil of relay 2K1 which mechanically latches in. 2K1 energizes blower contactor 2K2 applying power to the blower motor 2BM1, de-energizes the shutdown time-delay relay 2K3, de-energizes the lamp in the green TRANS START push button, energizes the lamp in the red TRANS STOP push button, energizes the AIR supervisory light 2I1, and partially completes the circuit of the filament contactor 2K4. As soon as the blower motor comes up to speed and air flow is established, the air interlock 2S21 closes. The filament contactor is then energized through a

normally closed contact of 2K3, a normally open contact of 2K2, a NO* contact of 2K1 and the air interlock switch. Power is then applied to all filaments and the AIR supervisory light is extinguished.

With filament power applied, the filament interlocking relays 2K33 and 3K10 for the visual and aural sections are both energized. These in turn energize the 30-second filament time-delay relays 2K5 and 3K1 as well as providing interlocks in the main plate contactor circuits of each section. When the contacts of 2K5 and 3K1 close, the by-pass time-delay relays 2K6 and 3K2 are energized closing their contacts, the lamps in the green PLATE ON push buttons 2IS3 and 2IS5 are energized, the visual and aural BIAS supervisory lights 2I3 and 2I11 are energized, the low-power contactors 2K7 and 3K3 are energized, and a source of power is provided for operating the visual and aural PLATE ON latch relays 2K11 and 3K4.

When the low-power contactors close, energizing all low-voltage power supplies, bias voltage is established in each section and the bias undervoltage relays 2K34 and 3K11 are energized. These close extinguishing the BIAS supervisory lights and provide interlocks in the main plate contactor circuits.

Note that the BIAS supervisory lights are energized only when low-power contactor 2K7 is closed and the bias undervoltages relay has not operated. Also, the DOOR supervisory lights are energized only when the low-power contactors are not energized because of an open door interlock.

Both the aural and visual sections are now ready for application of HV plate power by pressing the green PLATE ON push buttons 2IS3 and 2IS5. These momentarily engage, energizing the plate-on latch relays 2K11 and 3K4, latching them in. Since the filament interlock relays 2K33 and 3K10, bias undervoltage relays 2K34 and 3K11, and low-power contactor 3K3 are all energized, the closing of contacts on 2K11 and 3K4 completes the circuits to the main plate contactors 2K12 and 3K5.

When the plate contactors close, power is applied to the visual and aural HV plate transformers. The lamps in the green PLATE ON push buttons 2IS3 and 2IS5 are extinguished. The lamps in the red PLATE OFF push buttons 2IS4 and 2IS6 are energized. The step-start time-delay relays 2K13 and 3K6 are de-energized, and power is made available to energize the high-voltage step-start relays 1K301 and 3K7. Relays 1K301 and 3K7 were not energized previously since 2K13 and 3K6 were energized. However, approximately one second after 2K13 and 3K6 are de-energized, their time delay contacts close, energizing 1K301 and 3K7 completing the application of HV plate power to both sections.

4. STOPPING SEQUENCE

A. PLATE OFF

Depressing the red PLATE OFF push buttons 2IS4 and 2IS6 reverses the starting procedure; i.e., removes the HV plate power, extinguishes the lamps in 2IS4 and 2IS6, and energizes the lamps in the green PLATE ON push buttons 2IS3 and 2IS5.

B. TRANSmitter STOP

Depressing the red TRANSmitter STOP push button 2IS1 momentarily energizes the reset coil of 2K1 allowing it to fall out. When 2K1 is in the reset position, the filament contactor 2K4 is de-energized removing filament power; the shut-down time delay relay 2K3 is energized, and the contact on 2K1 which energizes the blower contactor 2K2 during the start sequence is open. However, the blower contactor 2K2 does not fall out since it is sealed in by a circuit through one of its own contacts and the time delay opening contact of 2K3. After 3 minutes time delay, the contact of 2K3 opens, de-energizing the blower contactor. The Transmitter is then returned to the off position.

*Normally open.

5. AUTOMATIC RECLOSURE

A. Two-Second Power Failure Restart

Using mechanical latch relays permits the Transmitter to automatically return to whatever operating condition preceded a failure of the main power supply. For momentary power failures of less than two seconds, bypass time-delay relays 2K6 and 3K2 permit instantaneous reapplication of high voltage. A mechanical escapement device delays the reclosure relay contacts from opening for two seconds after the relay coil is de-energized. These contacts are in shunt with the contacts of the filament time-delay relays maintaining the filament circuit during the two-second delay. If power is reapplied during this time the circuit remains sealed in and plate power is immediately re-established. Otherwise the filament time-delay relays 2K5 and 3K1 will fall out reclosing only after a 30-second delay.

B. Automatic Plate Overload Reclosure

The visual main plate contact 2K12, is energized through a series of relay contacts and contactor interlocks as follows; through 2K15, 2K38, 2K37, 2K36, 2K35, 2K33, 2K34 and 2K11. Likewise the aural main plate contactor 3K5 is energized through contacts on 2K5, 2K44, 2K43, 2K42, 2K41, 3K9, 3K3, 3K10, 3K11, 3S7 and 3K4. All of these must be closed in order to apply HV plate power to both the Aural and Visual sections.

There are parallel connections in shunt with the contacts of 2K15 in the two series circuits described above. In the Aural this shunt circuit consists of a NC* contact of antenna supervisory light relay 2K6, and NC contacts of overload supervisory light relays 2K27, 2K28, 2K29, and 2K30. In the Visual the shunt circuit consists of another NC contact of 2K26, and NC contacts of overload supervisory light relays 2K22, 2K23, 2K24, and 2K25. The purpose of these shunt circuits is to enable one plate reclosure circuit to operate independently for the Visual and Aural sections.

In order to follow the operation of the overload circuits, assume an overload condition causing excessive visual PA cathode current. Overload relay 2K38 will operate. Contacts of 2K38 open the coil circuit of the main plate contactor 2K12, energize the PA supervisory light relay 2K22, and energize the latch coil of plate reclosure auxiliary relay 2K15. As soon as 2K22 is energized, one of its contacts seals it in and supervisory light 2I4 is energized indicating that an overload has occurred in the visual PA circuit. Relay 2K22 and light 2I4 remain energized due to the seal-in contacts. The other contact on 2K22 (double throw) breaks the shunt circuit across the contact of 2K15 that is in series with the coil of 2K12. When it moves to the other position, it energizes the lamp in the red RESET push button 2IS7.

When the latch coil of 2K15 was energized, its contact, in series with 2K12, opened. With the shunt circuit across this contact also open, the circuit to the coil of 2K12 is broken and remains open keeping the HV plate power off in the Visual section and allowing the overload relay 2K38 to return to normal position.

When 2K15 is in the latch position, its contact, in series with the aural plate contactor 3K5, is also open. This does not however, remove power from the aural plate supply because the shunt circuit across this contact of 2K15 has not been opened.

A third contact on 2K15 actuates the automatic reclosure circuit and re-applies plate power. When 2K15 moves to the latch position this contact closes and energizes the reclosure coil of the sequence relay 2K16 through the plate reclosure switch 2S25 and one of the contacts of 2K16. When 2K16 reclosure coil is energized a ratchet-cam mechanism moves to the second position. The

*Normally closed.

OCCO* contact is then closed, the CCCO** contact remaining closed. The third or instantaneous contact, which closes each time the reclosure coil of 2K16 is energized, energizes the reset coil of 2K15 through the OCCO contact and one section of 2S25. Resetting 2K15 closes its contact in series with 2K12 completing the circuit and thereby reapplying visual plate power.

If a second overload occurs the above operation will be repeated and the reclosure relay 2K16 will move to the third position and power will be reapplied a second time.

A third overload will cause 2K16 to move to the fourth and last position. The OCCO contact is then in the open position preventing the reset coil of 2K15 from being energized. 2K15 remains in the latch position preventing the reapplication of plate power.

After the first and second overload when the OCCO contact of 2K16 is closed, the coil of the automatic reset relay 2K18 is energized. This time-delay relay energizes the reset coil of 2K16 approximately 10 seconds after being energized. Operating the reset of 2K16 allows its sequence mechanism to move back to the starting position. Thus, if not more than two overloads have occurred in any 10-second interval the automatic reclosure circuit is automatically reset. Depressing either the visual PLATE ON push button 2IS3 or the aural PLATE ON push button 2IS5 energizes reset relay 2K17 through contacts on the plate on latch relays 2K11 and 3K4. 2K17 energizes the reset coils of both 2K15 and 2K16. Thus the reclosure circuit is manually reset each time the PLATE ON control is operated.

Operation of any of the other DC overload relays initiates the same sequence of operation as described. The aural overload relays cause only the aural plate contactor to drop out just as the visual overload relays cause only the visual plate contactor to open. The plate reclosure circuit operates on each section independently. However, the antenna overload relay 2K39 and antenna supervisory light relay 2K36 are connected to cause both aural and visual sections to drop out in case of excessive VSWR on the transmission line. This is necessary in order to extinguish any RF arcs which might occur and be maintained by power from either section alone. Contacts of 2K26 are in the shunt circuits across both sections of 2K15. Thus when 2K26 is energized by 2K39 and seals in, it breaks both shunt circuits so that operation of 2K15 to the latch position opens the plate contactor circuits of both sections.

6. SUPERVISORY LIGHT CIRCUITS

Supervisory lights for AIR, VISUAL DOOR, VISUAL BIAS, RECLOSURE SWITCH, AURAL DOOR and AURAL BIAS illuminate only as long as the particular circuit condition which they indicate exists. All the remainder indicate momentary overload conditions and remain illuminated until the reset push button 2IS7 is depressed, operating 2K19 to break their seal-in circuit. When any of the overload indicating lights are energized, the lamp in the red reset push button 2IS7 is also energized. Thus if only the red push button is illuminated, it indicates that one of the supervisory lights is burned out and needs replacement.

When an overload condition existing in the Transmitter has caused three operations of the reclosure relay locking it out, the plate contactor is de-energized, but the plate-on latch relays (either 2K11 or 3K4) are still in the latch position. Depressing the reset push button 2IS7 will cause the supervisory light relay to drop out, re-establishing the shunt circuit across the contact of 2K15 re-energizing the plate contactor. Contacts on the reset relay 2K19 energize the reset coils of 2K11 and 3K4 only when their corresponding plate contactors are de-energized at the time that the reset push button is operated.

*Open closed closed open.

**Closed closed closed open.

7. EMERGENCY STARTING

EMERGENCY START push buttons 2S22 and 2S26 permit by-passing the 30-second time-delay relays 2K5 and 3K1 when starting under emergency conditions. For example, assume that a power failure of long enough duration occurs that the automatic power failure restart circuit will not automatically reapply plate power. Under this condition the rectifier tubes are still moderately hot and do not need the full 30-second time delay. A good rule to follow is to allow as much heating time before operating the emergency start switch as the time off interval, to avoid long program delay.

This circuit should not be used in normal operation as severe damage may result to the rectifier tubes if plate power is applied without proper filament heating time delay when the tubes are cold.

12.5 Emergency Procedures

The variety of corrective measures that might be called for in getting a transmitter back on the air or in clearing defective pictures is so great that a natural limitation is immediately placed upon the thoroughness of presentation in this section. The treatment is, therefore, very general in nature.

The MOST IMPORTANT phase of meeting emergencies is in *training* the entire staff to be *mentally prepared* for corrective procedures. Due to the complexity and unusual expense, complete standby transmitters for emergency use are a rarity in TV broadcasting. It is the duty of each individual operator to thoroughly study the technical aspects of his particular installation, and to prepare himself to analyze malfunctioning equipment with a certain coolness and deliberateness. Such a psychological preparedness actually minimizes the time necessary to clear transmitter faults. Every station chief engineer or supervisory personnel should then conduct classes during off-hours in which most likely and typical faults are simulated for observation of effect on meter readings, waveform and picture content, etc. Transmitters that have been on the air over a period of one year will inevitably have certain pecularities which are revealed in case histories that should be available to all operators.

Within a very few seconds after the occurrence of a fault the operator should be able to analyze the fault as being in one of the following general classes; control circuits or power supplies; video amplifiers used as incoming line amplifiers from studio or network, video modulator section, or radio frequency section. If trouble is in the sound, he would immediately place the possible source as either line amplifier from studio, modulator section of aural transmitter, or frequency multiplier and final RF stages.

It is most helpful upon the first instant of trouble in picture or sound (or both) to observe the respective frequency and modulation monitors. THIS IS MOST IMPORTANT for the following reasons:

(1) A picture, for example, may disappear from the picture monitor screen, yet still be transmitted over the air. In this instance the picture monitor itself is obviously at fault. If this should be the case, the modulation monitor showing the modulated RF envelope will be indicating as usual, and a spare picture monitor is substituted for the defective one.

(2) Assume that the picture disappears from the picture monitor. A quick glance at the modulation monitor shows no modulation taking place. At this time it is possible to get a preliminary idea as to possible trouble by observing the RF input indication to the frequency monitor. For example, in the monitor described in section 12.1, any deviation from normal RF input is indicated by a lamp. If this lamp indicates a fault in RF input level, the operator has a pretty fair hunch that most likely the trouble is in the RF portion of the transmitter. If the RF indication to the monitor is normal, the operator is suspicious of the video section which includes

stabilizing amplifier on incoming line, video amplifier or modulator stages in transmitter, *or no incoming signal from the studio.* This is quickly checked in most installations by a switch on the control panel which places a monitor across the incoming line terminations, output of stabilizing amplifier, or output of modulator stage in transmitter. Thus the signal may be "traced" in this manner to quickly isolate the faulty stage.

In instances where the transmitter is removed from the air either by tripping of the overload relays or failure of a power supply, the above procedure is obviously unnecessary. Visual observation of the transmitter rectifier tubes, overload relay indicators and meters is the initial act of the operator. He then mentally analyzes the evidence and decides what is necessary to place the unit back in operation. Overload relays or thermal switches may have to be re-set. If this results in another quick shut-down of the transmitter, a fault exists which must be cleared before re-applying the high voltage.

Sometimes visible or audible arcing occurs to give an indication of the general stage being overloaded. If not visible, aural perception is usually sufficient to tell the operator which rear doors to open to observe for visible signs such as blackened spots on the frame next to a capacitor or high-voltage terminal. Insulators must be observed for cracks or signs of breakdown in this case, and high voltage leads to tubes or components examined for bad insulation. If the arcing cannot be located by either of the above methods, it is necessary to carry out an emergency procedure which must be exercised with the utmost of caution and preferably with another operator standing by.

This procedure is that of opening the rear doors of the suspected unit, strapping the interlock circuits for that cubicle closed, and applying high voltage while the operator watches for the point of arcing. To do this it is simply necessary to jumper the proper terminal numbers associated with that particular door lock so that voltage may be applied with the door open. For example, on the schematic of Fig. 12.4B, the door interlock 1S303 completes the circuit from terminal board numbers 1TB9-1 to 1TB9-2. Thus the operator would jumper (with a temporary clip lead a number of which should always be handy) terminals 1 and 2 of terminal board 1TB9. THIS IS AN EMERGENCY PROCEDURE and is never done except when absolutely necessary.

The operator should be so familiar with the control circuit diagram that he may locate such terminal numbers with the minimum of delay when necessary to look at the diagram for such emergency procedures. For example it would be entirely possible for the contacts on a time-delay relay to open up, either from faulty adjustment, dirt or corrosion between contacts, or faulty relay itself. This would be indicated by some light usually on the control panel designated (for example) as READY. This means that the time delay interval has expired when first turning the transmitter on, and the high voltage circuit is capable of being energized when the operator is "ready." If this light should go out, the time-delay relay would be one possible cause, and the operator should be able to locate the proper terminal board numbers to jumper for this emergency. This, of course, is only one example of many possibilities.

Overloads which trip the "AC Overload" indicators are usually caused by mercury-vapor rectifiers "arcing back" from faulty tubes. Many transmitters employ "arc-back" indicators on each rectifier tube which indicate this reverse-firing condition so that that particular tube may be replaced. If such indicators are not used, it is wise to replace the entire complement of mercury vapor tubes with rectifiers known to be good, preheated and air-tested. Proper preventive maintenance prevents this occurrence and is discussed under section 12.6A to follow.

Some transmitters have "built-in"

emergency provisions for such occurrences as improper clamping of signals in the video modulator section. It should be recalled that this is the case in the GE TT-10-A described in the previous Chapter. Several different types of trouble may cause the modulator to stop functioning in its normal clamped manner. One instance is an input signal from the studio that is defective in certain particular ways. Another instance is failure of some of the tubes or components in the sync operating and pulse forming part of the modulator.

It should be noted, for example, from the previous description of the GE TT-10-A transmitter, that AS LONG AS THE FAILURE DOES NOT INVOLVE THE VIDEO AMPLIFIER STAGES IN THE TRANSMITTER, operation may be resumed in the manner designated as emergency operation. This is outlined by General Electric as follows:

(1) If the input sync voltage is too low, there will not be enough sync to be properly separated and keying pulses will be formed in an erratic manner. Note that lack of sufficient input sync voltage results from either too low a total peak-to-peak composite signal input (considerably below one volt) or too low a sync percentage even though the peak-to-peak value of the composite signal is one volt or greater. (GE specifications call for at least 10% sync at any input voltage over one volt).

(2) If the incoming signal has back porches narrower than standard, or split pulses resulting in narrow slots in the sync going down to black, normal operation will not be obtained. Note that certain other types of defective signals such as poor low frequency response or hum are improved by the clamp operation of the modulator.

In the above transmitter if such a failure occurs, the modulator may be switched to EMERGENCY OPERATION. In this change, simple diode DC insertion on sync peaks is substituted for the back porch clamp type of normal operation. The switch from normal to emergency operation is accomplished by changing the two 6AL5 diodes from their NORMAL to their EMERGENCY sockets as indicated by the front panel marking on the modulator. The switch is left in its CLAMP position. Readjustment of the RF GAIN, SYNC and VISUAL PGM controls on the control panel will be required.

On EMERGENCY OPERATION, the two stages where the diodes are used for DC insertion are being operated far outside of the normal grid resistance ratings of the tubes. Therefore it is recommended that the EMERGENCY condition be used no longer than absolutely necessary. It is necessary to repair whatever caused the switch, and return to CLAMP operation as soon as possible.

Troubles in rf stages of transmitters may generally be isolated by observing the meter readings of the individual stages. For example the stage nearest the oscillator showing lack of proper grid current indicates insufficient drive from the preceding stage, or a defective tube or component in the observed circuit. Tubes are always the first to be suspected in a malfunctioning stage.

A word of caution is in order at this point. When first placing a transmitter on the air at the start of operations, and during preliminary overall checks on the sideband analyzer or waveform indicator, an indication of complete detuning *might* result from a defective sweep generator or indicating device. Should the RF waveform be defective, yet all meters are indicating "on the nose," the operator should first check his test equipment before suspecting the transmitter. This is done by checking the output trace of the sweep generator on a known-to-be-good oscilloscope. If the traces are normal at the terminations and inside the sweep generator, and the RF waveform is defective as displayed on the substitute scope, the trouble may be assumed to be in the RF stages of the transmitter. Most generally, this results in abnormal meter reading on the rf stages.

The same thinking should be observed if, at any time during the operating day, the frequency meter for either visual or aural transmitter should indicate a frequency outside the authorized deviation. Remember that the station monitor is a "secondary standard," and before suspecting the transmitter, the frequency monitor itself must be ascertained to be in proper working order. This may be done only by checking with a "commercial primary standard frequency measuring service" authorized by the FCC. When the station monitor has been calibrated against this primary standard, as it should be whenever its operation is suspected, then the transmitter may be adjusted accordingly. The monitor is usually checked with such service once a month as a part of routine maintenance procedures.

Push-pull tubes in RF linear amplifier stages should have their plate or cathode currents balanced within 10%. When an unbalance greater than this amount is revealed by meter readings, the thought immediately occurs as to whether this is caused by tubes, or components. in the stage. This is quickly settled by removing the RF drive temporarily. If the unbalance remains, the tubes should be suspected and replaced with balanced pairs. If the currents are balanced with removal of RF drive, the circuits should be suspected and examined for the cause. For example, many RF stages use cathode or filament bypass capacitors. Should one of these capacitors be defective, currents would obviously be unbalanced with RF drive. If shorted, the currents would be unbalanced without or with RF drive, and cathode current meter reading would be abnormally low. If open, excessive tilt across the tops of the horizontal sync pulses would be observed from the output, whereas the waveform at the modulator would be normal. Unbalanced currents would also obviously be caused by defective bypasses such as screen or plate, bad connections, misaligned link couplers, etc.

Since any emergency changing of tubes in the RF portion during the operating day will affect to some degree the tuning of the stage, it is wise to try all the spare tubes in these stages during regular preventive maintenance schedules, and keep a record posted as to dial settings for proper tuning with these tubes. This saves the time of alignment that would otherwise be required. The transmitter may then be exactly aligned with the proper test equipment after the close of the regular operating day.

12.6 Preventive Maintenance Procedures

The importance of a rigid preventive maintenance schedule at TV transmitters where standby units are an extreme rarity should now be obvious to all personnel. It remains to examine in detail the methods and procedures involved.

General schedules may be outlined as follows:

A. DAILY

1. Throughout the operating day, in addition to recording 30 minute meter readings, make daily reports on any peculiarities in meter readings, time and duration of any abnormal waveform observations, and any unusual deviations in frequency deviation readings and water-temperature readings in water-cooled tubes. Record time and indicated circuits of overloads.

2. After shutdown, investigate any of the peculiarities listed in (1).

3. Immediately after shutdown, *feel* all components such as capacitors, inductors, transformers, relays, insulators, grid and anode connections of high-power tubes for excessive heating. Get the "feel" habit to become familiar with normal operating temperatures. Feel blower motors.

4. Should general abnormal high temperatures be revealed, check for correct cabinet temperatures and check air-filters for cleanliness. Check cabinet temperature of air around all high voltage rectifier tubes.

5. Check pressure in gas or dry-air filled transmission lines.

6. Visually observe all components such as resistors, meter hands (for zero set), insulators, etc. Watch for blistering or discoloration on resistors. Watch all electrolytic capacitors for bulging sides or leaking insulation. Get the habit of *observing* along with *feeling* for normal appearance and operation. Cultivate the habit of *smell* to analyze any unusual odors.

B. WEEKLY (In addition to daily)

1. Carry out overall alignment procedures. This serves two purposes; to keep the operator familiar with the procedure, and to aid in observing any slight changes in stage-by-stage tuning. Realignment would be absolutely necessary about every two months for optimum transmitter results.

2. Clean and polish all safety gaps.

3. *Dust off all surfaces.* Use a small forced air stream in spaces not readily accessible with a rag and cleaning fluid. Thoroughly clean and polish all insulators with a rag and carbon tet. Inspect closely for cracks. Clean and inspect all terminal boards for tightness of connections. After dusting, clean entire transmitter with vacuum.

4. Check blower motors and blower belts for proper tension. Inspect air filters and clean or replace if necessary. Check blower interlock switches for freedom of operation and cleanliness of contacts. See that oil level in blower motors is correct.

5. Check all door interlocks and safety switches for proper operations.

6. Check spare crystals to be sure they will operate properly in an emergency. At the same time check neutralization of stages by removing the crystal.

C. MONTHLY (In addition to weekly)

1. Remove and test all receiving type tubes with a good dynamic tester. Any tubes falling below 10% of their normal transconductance value should be replaced. *Be sure* to check the new tube before installing! While the tubes are removed, thoroughly vacuum all sockets and check for tightness of socket wiring. Examine all grid caps and connections.

2. Clean and adjust all relay and contactor contacts. Watch for badly worn contacts and replace if necessary. Clean pole faces on contactors.

3. Clean and polish all tuned line circuit elements and connections.

4. Clean all audio equipment including attenuators and switching contacts.

5. Calibrate visual and aural transmitter frequency monitors with a primary standard frequency measuring service.

6. Clean all monitoring equipment including switches.

7. Clean, inspect and check for proper operation all automatic control equipment such as time-delay relays, overload relays, etc.

8. Where water-cooling systems are employed, check entire system for any visible signs of leaking and for electrical leakage.

D. QUARTERLY (In addition to monthly)

1. Check all filament voltages with an accurate voltmeter.

2. Operate all spare mercury vapor rectifiers. Even though pre-heated and stored upright as they should be, a 15 minute period of filament voltage only should be observed. Check for high voltage operation and run for several hours before storing again in their upright containers.

3. Operate spare high-level tubes for several hours at their normal ratings to prevent formation of gas within the envelope. This also serves to double-check their operation in case of emergency.

4. Check all filter bank surge resistors (where used) with an ohmmeter.

5. Check overall system performance as to picture resolution, waveform, aural noise and distortion, and keep

accurate records of tests. Any undue deviation from normal should be run down by stage isolation.

In the following subsections, preventive maintenance hints for major components are given for that specific unit.

12.6A Tubes

Some operators overlook the routine maintenance on receiving and transmitting type tubes that is possible to prolong their useful life and to prevent breakdown during the regular operating day. Obviously all tube outages cannot be foreseen, but regular tube maintenance will minimize such emergency conditions.

Preventive maintenance on receiving type tubes consists mainly in inspection of the glass or metal envelopes, grid caps and pins; inspection of the socket for cracks, dirt or wiring condition; regular schedules of checking on a transconductance tube checker; and the cleaning or adjustment procedure required to correct any fault. Tubes with loose grid caps and glass tubes loose at the base should be immediately replaced. Spring clips that connect to the tubes grid cap must be examined for a tight fit and adjusted if necessary. Tube base pins must be straight and free from dirt or other foreign matter. A clean dry cloth should be used to keep the envelopes clean, and sockets vacuumed at regular intervals with tubes removed.

Cleanliness of high voltage transmitter type tubes is of utmost importance. High voltage leads and contacts have a habit of collecting dust and dirt and must be cleaned often. The operator should cultivate the feel habit of grid and anode connections to become acquainted with normal operating temperatures. Also grid and anode terminals of tubes in the same stage should feel the same in operating temperature. Excessive heat usually indicates a faulty connection in grid or plate clamps, and proper tension must be maintained in all clamping and mounting devices.

A tube popularly used in a number of VHF television transmitters is the RCA 8D21 water and air-cooled twin-tetrode illustrated in Fig. 12.6A(1). The operational and maintenance data on this tube follows.*

The serial number which identifies each individual 8D21 and which should be used in any correspondence concerning the tube, is stamped on the structure within the glass envelope between the plate terminals. Other numbers stamped externally in the tube are for purposes of manufacturing records only.

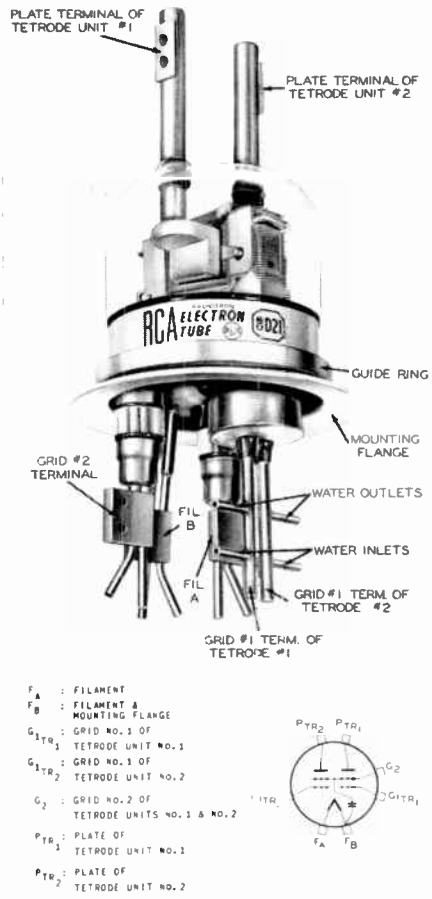

Figure 12.6A. (1) Type 8D21 Tube. Courtesy RCA Tube Div.

*ctsy RCA Tube Division.

In transportation and storage of the 8D21, care should be taken to protect the tube from rough handling that would damage the metal-to-glass seals or other parts. The 8D21 is supported within its shipping container so that it will not come in contact with the sides of the container during shipment. It should be stored in the container with the plate terminals down and should be protected from moisture and extreme temperature changes.

While the tube is being removed from its container, it should be lifted by grasping both filament-pipe assemblies near the mounting flange, or by grasping one filament-pipe assembly and the grid-No. 2-pipe assembly near the mounting flange. Under no circumstances should the 8D21 be handled by the grid-No. 1-pipe assembly. After the tube is removed from its container, it should be handled by the bulb or mounting flange. The weight of the 8D21 packed for shipment is approximately 12½ pounds; unpacked, approximately 4½ pounds.

It is recommended that the tube be tested upon receipt in the equipment in which it is to be used. Before the tube is placed in operation, any foreign material clinging to it should be removed. After the tube has been tested and before it is placed in storage, its cooling pipes and the ducts in the tube electrodes should be blown free of water. Care should be taken to prevent any foreign matter from entering the cooling pipes at any time. As a safeguard, it is recommended that during storage the 8D21 be completely enclosed in a container made of Pliofilm, or equivalent, and then sealed.

Mounting of the 8D21 requires the use of a mechanism to engage the mounting flange and clamp it firmly to hold the tube in a horizontal position with the plane of the grid-No. 1 leads horizontal and below the horizontal plane of the plate leads. Care should be taken to prevent vibration from being transmitted to the tube. Vibration of the tube and its associated circuit may cause undesired modulation of the signal output. Circuit elements adjacent to the tube terminals should put no strain on the terminals.

Extreme care should be taken to assure that no strain is placed on the seals when connecting or disconnecting the water hoses and the electrical connections to the tube. Particular care must be exercised with the grid-No. 1 seals. The grid-No. 1-pipe assembly should be supported with one hand while attaching or detaching the water hoses with the other.

The water-cooling system consists, in general, of a source of cooling water, a feed-pipe system which carries the water to the filament blocks, the No. 1 grids, the No. 2 grids, and the plates of the tube, and provision for interlocking the water flow through each of the electrodes with the power supplies. When the plate is at high potential above ground, the feed-pipe system should have good insulating qualities and proper design to reduce leakage current to a negligible value.

It is recommended that the water-cooling system be of the closed type utilizing distilled water to prevent the possibility of scale formation and corrosion, both of which can be expected with tap water. Scale not only restricts water flow but prevents proper transfer of heat from the tube electrode to the cooling water, while corrosion may destroy the electrodes and pipes. The water-supply system should be capable of supplying at least 2 gallons per minutes at a pressure of 60 pounds per square inch at the tube.

A strainer should be provided in the water supply line to the tube in order to trap any foreign particles likely to impair the water flow through the tube pipes. It is suggested that a strainer with an 80-mesh screen (0.005″ openings) be used.

Proper functioning of the water-cooling system is of the utmost importance. Even a momentary failure of the water will damage the tube. In fact, without cooling water, the heat of the filament

alone is sufficient to cause serious harm. It is, therefore, necessary to provide a method of preventing operation of the tube in case the water supply should fail. This is done by the use of water-flow circuit breakers or interlocks which open the power supplies when the flow through any electrode is insufficient or ceases. The water flow must start before application of any voltages and preferably should continue for several seconds after removal of all voltages.

The use of an outlet water thermometer and a water flow meter at each of the outlets is recommended. Under no circumstances should the temperature of the water from any outlet ever exceed 70°C.

If occasion arises where any of the cooling pipes becomes clogged, the tube should preferably be removed from the circuit before attempting to dislodge the foreign material. Then, use water or compressed air at a pressure not exceeding 100 pounds per square inch to try to dislodge the foreign material in a direction opposite to that of the normal water flow through the clogged pipe. If compressed air is not available, compressed gases, such as nitrogen or oxygen, may be used provided the pressure is limited to 100 pounds per square inch. Should this procedure fail to clear the pipe, write Adjustment Dept., Radio Corporation of America, Harrison, N. J., for instructions, giving complete details.

An approximate value of the plate dissipation may be calculated from the following equation

$$P_{watts} = n(t_o - t_i) \times 250$$

in which t_i is the temperature of the cooling water at the inlet in degrees Centigrade, t_o is the temperature of the water at the outlet in degrees Centigrade, and n is the number of gallons per minute of flow.

An air-cooling system, interlocked with the power supplies, is required to cool the glass envelope of the 8D21. This system consists of a blower and an air duct having a 2"-diameter nozzle. The air flow from the nozzle should not be less than 40 cubic feet per minute, and should be directed at the plate end of the tube so as to cool the area between the plate seals as well as the sides of the glass envelope. The temperature of the seals and of the bulb should not exceed 150°C at the hottest point. The temperature of the plate seals and of the bulb may be measured either with a thermocouple or with temperature-sensitive paint, such as Tempilac. The latter is made by the Tempil Corporation, 132 West 22nd Street, New York, N. Y., in the form of liquid and stick, and is stated by the manufacturer to have an accuracy of 1 percent.

The air-cooling system should be electrically interconnected with the filament and high-voltage supplies to prevent the application of voltages to the tube without air cooling. The air flow must start with the application of plate voltage, and may be removed simultaneously with removal of the plate voltage. Precautions should be taken to insulate the air-cooling system from the tube or circuit parts which may be at high potential.

The thoria-coated filament in the 8D21 is of the multi-strand type and is designed for DC or single-phase AC operation. The filament is arranged so that the strands in one leg furnish the electron emission for one tetrode unit, while those in the other leg furnish electron emission for the other tetrode unit. The strands of each leg are recessed in slots in a focusing block through which water is circulated by means of two water pipes. These two pipes are electrically and mechanically connected together by a lug which serves as the terminal for one leg of the filament. Similarly, the two pipes for the other block are connected together by a lug which serves as the terminal for the other leg of the filament.

The filament connectors should make firm, large-surfaced contact with the filament lug terminals in order to prevent heating by the high filament current. The filament-connection leads

should not be taut, but should allow for some movement in order to prevent placing any strain on the filament pipes.

The filament of the 8D21 should be operated at constant voltage rather than constant current and must be allowed to reach normal operating temperature before plate and screen voltages are applied. The filament heating time is about 5 to 10 seconds depending on the type of filament starter employed. A suitable voltmeter should be permanently connected directly across the filament lug terminals so that the filament voltage will always be known.

Filament life of the 8D21 can be conserved by operating its filament at the lowest voltage which will give the desired power output. Because the filament of this tube when operated at the tabulated value of 3.2 volts provides emission usually in excess of any requirements within ratings, it is recommended that the filament voltage be reduced below 3.2 volts to a value that will give adequate but not excessive emission for any particular application. The proper operating value may be found by reducing the filament voltage, with normal modulation applied to the transmitter, until a reduction in output is observed. The filament voltage must then be increased by an amount equivalent to the maximum percentage regulation of the filament-voltage supply, and then further increased by about 0.1 volt to allow for other variations. It is suggested that the adjustment procedure be carried out daily. However, if no significant changes in the operating voltage are found necessary, the adjustment procedure can be scheduled less frequently. Good regulation of the filament voltage is in general economically advantageous from the viewpoint of the tube life.

During long or frequent standby periods, the 8D21 may be operated at decreased filament voltage to conserve life. It is recommended that the filament voltage be reduced to 80 percent of normal during standby operation up to 2 hours; for longer periods, the filament power should be turned off.

When direct current is used, the polarity of the filament leads should be reversed every 500 hours of operation.

A filament starter should be used to raise the filament voltage gradually in order to limit the high initial surge of current through the filament when the circuit is first closed. The starter may be either a system of time-delay relays cutting resistance or reactance out of the circuit, a high-reactance filament transformer, or a simple rheostat. A combination of the last two methods is usually most desirable. Regardless of the method of control, it is important that the filament current never exceed, even momentarily, a value of 220 amperes.

Circuit returns from the No. 1 grids, the No. 2 grids (connected together within tube and brought out to a single terminal), and plates should be made to the mounting flange or to filament terminal "B" which is electrically connected to the mounting flange.

The grid-No. 2 (screen) voltage should be obtained from a source of good regulation. The plate voltage should be applied before or simultaneously with the grid-No. 2 voltage; otherwise, with voltage on grid No. 2 only, its current may be large enough to cause excessive grid-No. 2 dissipation. A DC millammeter should be used in the grid-No. 2 circuit so that its current can be measured and the DC power input determined.

The grid-No. 2 current is a very sensitive indication of plate-circuit loading and rises excessively (often to the point of damaging the tube) when the tube is operated without load. Therefore, care should be taken when tuning the 8D21 circuit under no-load conditions to prevent exceeding the grid-No. 2 input rating of the tube.

The plate-supply lead common to both plates should be provided with a time-delay relay to delay application of plate voltage until the filament has reached normal operating temperature.

Protective devices should be used to protect not only the plates but also the

No. 2 grids against overload. In order to prevent excessive plate-current flow and resultant overheating of the tube, the common ground lead of the plate circuits should be connected in series with the coil of an instantaneous overload relay. This relay should be adjusted to open the circuit breakers in the primary of the rectifier transformer at slightly higher than normal plate current. The time required for the operation of the relay and circuit breakers should be about 1/10 second and not more than 1/6 second.

A protective device in the grid-No. 2 supply lead should remove the grid-No. 2 voltage when the DC grid-No. 2 current reaches a value slightly higher than normal.

When an 8D21 is first placed in service, care should be taken to see that the water and air-cooling systems are functioning properly. The tube should then be operated without plate or screen voltage for 5 minutes at rated filament voltage. After this initial preheating schedule, the tube should be operated at approximately one-half the usual plate and screen voltage for 15 minutes. Full plate and screen voltages may then be applied and the tube operated under normal load conditions for a period of 1 hour or more. It is recommended that spare tubes be given the preheating and initial-operating treatment every 3 months. This procedure will insure that only good tubes are carried in stock.

When a new circuit is tried or when adjustments are made, the plate voltage and the screen voltage should be reduced to approximately one-half the rated values to prevent damage to the tube and associated apparatus. After correct adjustment has been made with the tube operating smoothly and without excessive heating of the cooling water or the glass bulb, the plate and screen voltage may be raised in steps to the desired values. Adjustments should be made at each step for optimum operation.

The rated plate and screen voltages of the 8D21 are extremely dangerous to the user. Great care should be taken during the adjustment of circuits. The tube and its associated apparatus, especially all parts which may be at high potential above ground, should be housed in a protective enclosure. The protective housing should be designed with interlocks so that personnel cannot possibly come in contact with any high-potential point in the electrical system. The interlock devices should function to break the primary circuit of the high-voltage supplies when any gate or door on the protective housing is opened, and should prevent the closing of this primary circuit until the door is again locked.

The above data on the 8D21 serves to give the reader an insight to the thought given to operation and maintenance of transmitter type tubes.

Mercury vapor rectifier tubes should not be neglected in maintenance schedules. Unless proper precautions are taken, a major portion of lost airtime will be due to faulty rectifiers. These tubes should be observed whenever possible during each operating day. A good mercury vapor rectifier is characterized by a healthy clear blue glow. An unhealthy greenish-yellow color usually indicates a faulty tube or one which will soon cause trouble.

Due to the importance of foreseeing such trouble, and due to the lack of familiarity of the average operator with testing methods of this type tube, the reader should become familiar with the maintenance procedure illustrated by Fig. 12.6A(2). Since cathode ray oscilloscopes are common at TV transmitter installations, the operator may use this most accurate check conveniently. An isolation transformer of at least 300 volt-amp rating should be used and a series current limiting resistor of 50 ohms as shown. The mercury vapor rectifier tube is left in its regular socket with its regular plate cap connection removed. The secondary of the isolation transformer is then connected in series with the resistor to the rectifier plate, and the other lead connected to the filament center tap.

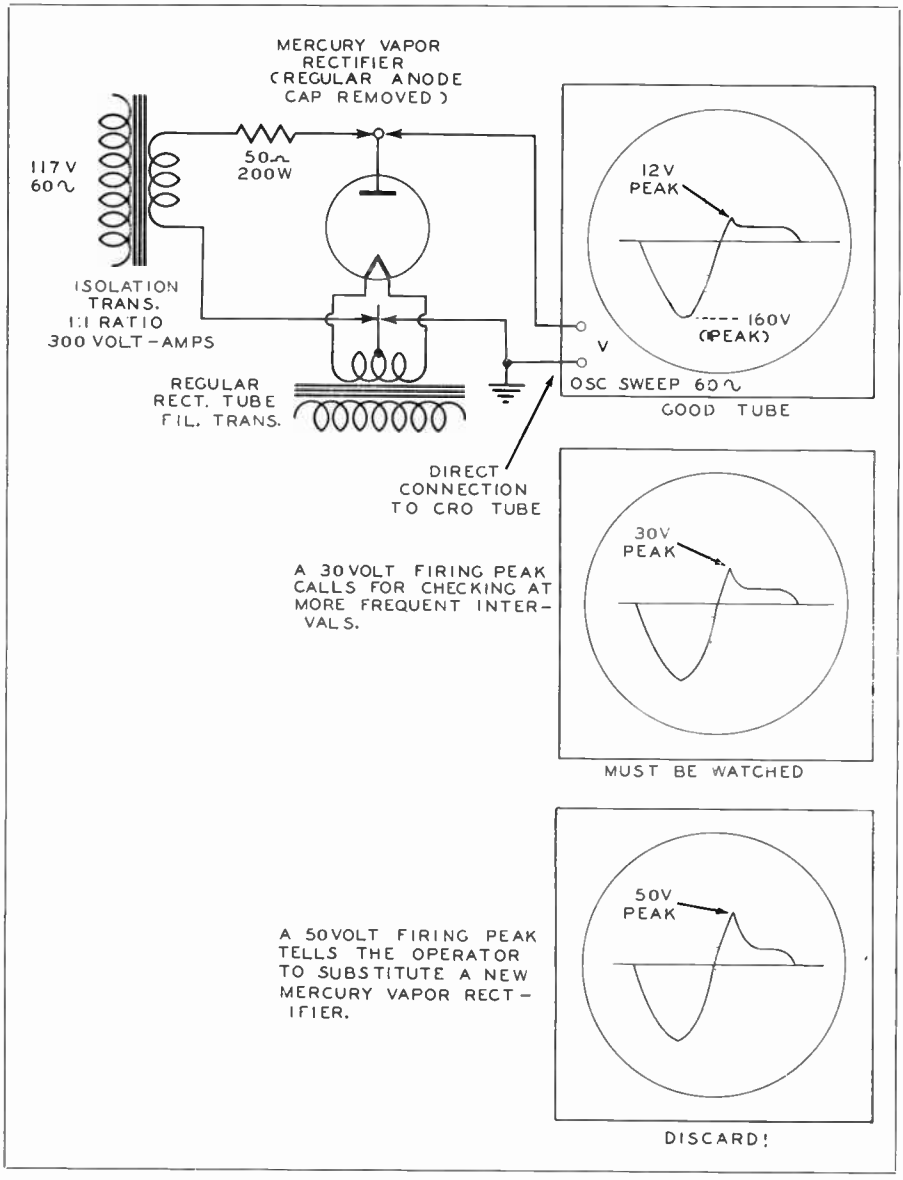

Figure 12.6A. (2) How to check a Mercury Vapor Rectifier.

The vertical deflection plates of the oscilloscope is connected directly across the tube in the same manner. With the scope self-synchronized with the 60 cycle power line and power applied to the filament of the tube being checked, the scope pattern will show the AC half of the non-conducting cycle and the conducting half which gives the DC potential. The sharp peak at the start of conduction reveals the tubes condition under operating conditions. A good tube will fire at between 10 and 20 volts as indicated by the amplitude of this peak on a calibrated screen. A tube approaching the end of its useful life will

require a higher firing voltage and will break into conduction later in the conducting interval. When this breakdown peak reaches from 30 to 40 volts, the tube must be tested at more frequent intervals, preferably once a week. When this firing peak reaches close to 50 volts, the tube must be replaced with a new rectifier. Operators following this procedure will greatly minimize the time lost by rectifier arc-backs and otherwise defective tubes. Always remember that mercury vapor rectifiers must have their filaments operated at normal voltage for a minimum of 30 minutes, then stored UPRIGHT to prevent the mercury from splashing back on the envelope and elements. Tubes which have been accidentally jarred must again be pre-heated before application of the anode potential.

12.6B Contactors, Relays and Switches

A number of contactors and relays are used in transmitters to provide automatic or remote control closing and/or opening of various electrical circuits. The term "switch" is usually confined to manually operated assemblies which open and/or close circuits by manual operation.

Relays are found in two basic types; front-connected open type and rear-connected types solidly enclosed in dust-proof cases. In addition to this basic classification, a large variety of operational functions are encountered, such as normally-closed, normally-open, and relays which break certain circuits upon "making" other circuits. An example of the latter is a relay which completes a circuit to a supervisory pilot light when not energized, and completes a primary high-voltage circuit while opening the circuit to the pilot light when energized. Thus if this pilot light should start indicating during operation, the operator knows which relay has "dropped out" of operation.

One basic type of relay is the Westinghouse Type SG Relay illustrated in Fig. 12.6B(1). Both open and enclosed types are shown. In either case the relay consists of four essential parts: core, yoke, armature and coil. The open type relay is normally supplied with two contacts and is shipped with both stationary contacts arranged to close when the relay is energized. However, either or both contacts can be converted quickly into a break contact merely by removing the screw which holds the stationary contact bracket and turning the bracket over. After tightening the screw, the contact bracket may be bent slightly with the fingers if necessary to change the back contact follow or alignment. When the make contacts are

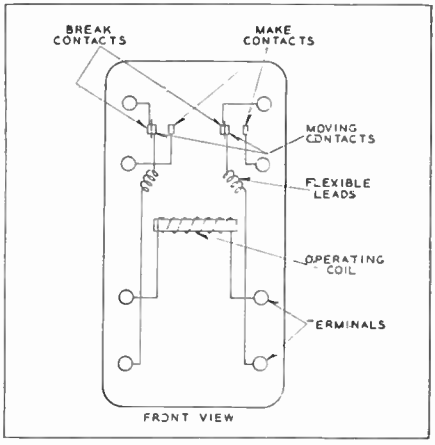

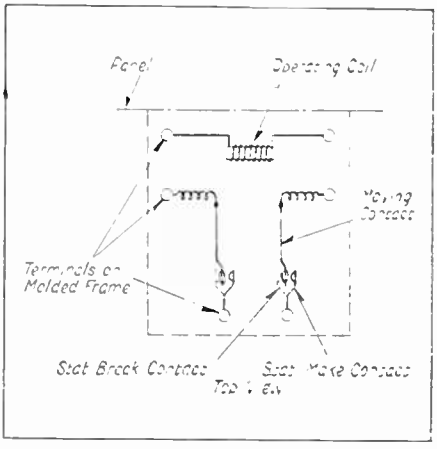

Figure 12.6B. (1) Courtesy Westinghouse.

closed, the moving contact fingers should be deflected approximately 3/64" measured at the contacts, or slightly over 1/32" measured at the upper edge of the molded armature block. The assembly of the moving contact fingers on the armature block is arranged to provide spring follow with either make or break stationary contacts. The closed type relay is provided with two make and two break stationary contacts with the moving contacts common, and the open type relay may also be provided with such a contact arrangement for applications which require it.

In examining relays of this type, observe for the following details:

1. Relay assembly for dirt, dust or other foreign matter.

2. All connections for tightness.

3. The coil for any signs of overheating revealed by charred insulation.

4. Coil and all wiring for defective insulation.

5. Moving parts for freedom of travel and follow.

6. Contacts for dirt, burns, pits or corrosion.

7. Proper line-up and follow of contacts. Correct spacing.

8. Contact springs for proper tension and function.

Preventive maintenance of relays consists chiefly of cleaning the contacts with a strip of crocus cloth dipped in carbon tet. This operation should be followed by pulling a clean dry linen cloth between the contacts held lightly closed with the fingers. Never use emery cloth on relay contacts as abrasive granules may be left imbedded in the contact surfaces tending to raise contact resistance and to encourage a tendency to weld. Slightly pitted contacts should be cleaned with a fine file such as S# 1002110. Contacts badly pitted should be replaced with new ones. Before any contact surfaces are worn to one-half their original thickness, they should be replaced.

Time-delay relays take several forms operating upon different principles to obtain a delay in function, but one of the most common is the motor-type illustrated in the drawing of Fig. 12.6B (2). This is the Westinghouse type TD Timing Relay. The operator will find many different manufacturers of transmitters using Westinghouse type relays in the protective and control circuits.

The Westinghouse type TD relay is an AC relay suitable for applications which require a time-delay of from

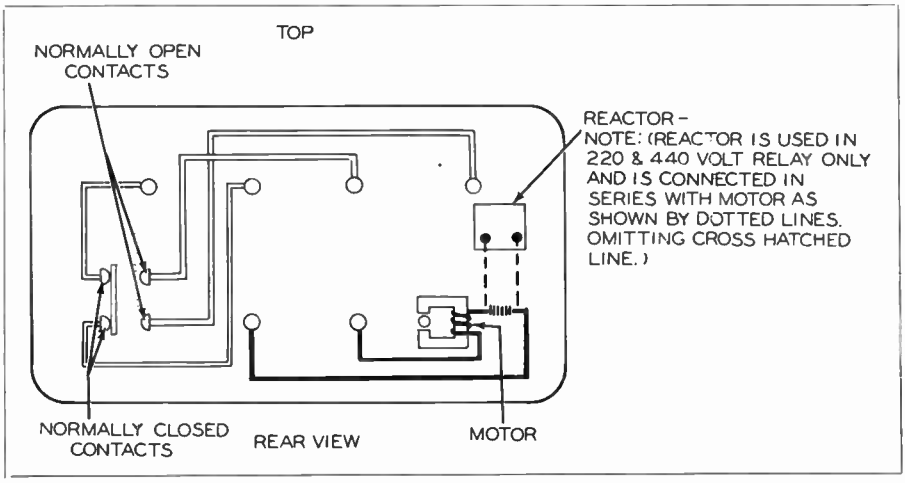

Figure 12.6B. (2) Internal Connections of Westinghouse Six Terminal Type TD (Time Delay) Relay. Courtesy Westinghouse.

about five seconds to several minutes between the closing of an AC circuit and the closing or opening of a second circuit, either AC or DC, through the contacts of the relay. Many such applications are found in transmitters.

The relay should be mounted with its long dimension horizontal, so that the gear shafts are vertical and the motor terminals are at the top. It will not operate properly if mounted in any other position. If the circuit to which the motor of the relay is connected has a voltage higher than 240 volts AC, an external resistor is supplied with the relay. This should be mounted near the relay and connected in series with the motor circuit.

The type TD relay consists of a small 600 r.p.m. self-starting synchronous motor, a gear train, and a set of silver contacts of the bridging type. When the motor is de-energized the rotor rests in a position somewhat lower than the pole pieces of the stator. In this position the pinion on the rotor shaft is out of mesh with the gear on the countershaft which is mounted in the motor frame. When the motor is energized, the rotor is lifted by magnetic attraction and the pinion is brought into mesh with the gear. The pinion on the motor countershaft drives a train of three reduction gears. An arm pressed on the shaft of the last gear is used to operate the contacts. When the motor has operated to open or close the relay contacts, the arm on the last shaft strikes a stop and the motor stalls. However, the motor can remain connected to the line without injury when stalled, and the locked rotor torque provides very good pressure on the closed contacts.

A spiral spring fastened to the shaft of the last gear causes the arm to reset to its initial position when the motor is de-energized. Since the pinion on the rotor shaft drops out of mesh when the motor is de-energized, the gear train ratio is reduced and the control spring will reset the arm very quickly. The time for maximum time-delay is less than 5% of the operating time. Because of the inertia of the gear train the resetting time is not directly proportional to the operating time. Consequently, with a time-delay setting of about one scale division the resetting time may be about 10% of the closing time.

An adjustable backstop for the arm on the last gear shaft is clamped between the upper bearing plate of the gear train assembly and the bearing screw for the last shaft. A scale on the upper bearing plate is used in conjunction with an index line on the Micarta portion of the arm when it is desired to make an approximate setting of the relay. The motor will drive the arm over the entire scale travel in approximately 1.5 minutes. Thus each of the ten small scale divisions corresponds to approximately 9 seconds. Where a very accurate setting is desired, the time interval should be checked with a stop watch and the position of the backstop adjusted for the exact time required. The backstop should be clamped securely by means of the bearing screw after the desired setting is obtained.

For such applications as require a longer time-delay than 1.5 minutes, the TD relay can be supplied with a maximum delay of approximately three minutes. This is accomplished by a change in the gearing of the motor only. The two styles of relays are identical in other respects.

The TD relay may be found with several different contact arrangements. The contacts themselves are made of chemically pure silver. The four-terminal relay can be furnished with bridging contacts which are either opened or closed at the end of the time-delay. The six-terminal relay has one set of contacts which are opened after a time-delay and a second set which are closed a few seconds later. In this case a silver strip which is held bridged across the normally closed contacts by a spring is moved away from these contacts by the arm on the last gear shaft and is forced against the normally-open contacts. Therefore, the transition is not instantaneous, but depends upon the spac-

ing between the two sets of contacts and upon the gear ratio. The spacing between the contacts can be varied a small amount by adding or removing washers between the heads of the contact screws and the mounting blocks.

The six-terminal relay can be supplied with a set of contacts which are opened as soon as the motor is energized and a second set which are either opened or closed at the end of the time-delay, but in this case the time-delay would not be adjustable.

The minimum time-delay obtainable with the TD relay with normally-open contacts only depends entirely on the minimum contact gap permissible. If the backstop is set so that the contact arm is one-half of a scale division from the contact-closed position, the contact gap will be approximately 1/16" and the time-delay will be about 4.5 seconds for the 1.5 minute relay. Because of the bridging type of contact used, there are two gaps in series in the contact circuit, and the total gap in this case would be about 1/8". If the contacts are required to break only a small amount of current when the motor circuit is de-energized, the time-delay could be decreased by a further reduction in the contact gap.

The normally-open contacts of the type TD relay can be used to close circuits carrying as much as 10 amperes at 125 volts, either AC or DC. They will open such a circuit satisfactorily if AC, but should not be used to open a DC circuit carrying more than 1.5 amperes at 125 volts. The normally-closed contacts have less contact pressure than the normally-open contacts and should not be used to carry more than 5 amperes. Because they open slowly, they should not be required to break more than 2.5 amperes at 125 volts AC or 0.5 amperes at 125 volts DC.*

All relays of any type, follower or plunger, should operate with a definite "snap" upon application of current to the operating coil. Friction resulting from dirt or other foreign matter, improper tension on contact spring arms or retaining springs, etc., must be remedied at the first opportunity.

Manually operated switches should also operate with a decided "snap." The maintenance engineer soon becomes accustomed to the "feel" and sound of switch action and is aware as to when replacement is desirable. Switch contacts should be kept clean by constant "wiping" action under operation, but this should be re-inforced by occasional cleaning with a clean rag and carbon tet.

12.6C *Antenna Systems*

Maintenance of antenna systems consists mainly of routine servicing of gas or dry-air dehydrating systems for gassing the coax lines, and testing the lines for leaks in gas should pressure be noted to drop at short intervals.

Should it be apparent that gas leaks exist in the line, all terminals and line connectors should be coated with soapy water while the line is under normal gas pressure, and observed for the characteristic "soap bubbles" which reveal even slight amounts of gas leakage. Lines which do not retain gas pressure well are liable to rapid deterioration in feeding characteristics due to moisture and must be repaired as quickly as possible.

Most manufacturers recommend that lines and connections be thoroughly checked and tightened at least once a year.

12.6D *Capacitors*

Capacitors in the high voltage, high-level circuits should be given the "feel" treatment each night after shutdown to anticipate outage. The operator soon becomes accustomed to the proper operating temperature of large capacitors and can anticipate trouble in most instances by this procedure. Observation should be made for any signs of undue terminal strain, cracks, leaking cases, etc. Smaller capacitors should always be inspected closely for physical appearance,

*Courtesy Westinghouse

tightness of mounting and connections, etc. Electrolytics should be observed for bulging sides and other signs of breakdown.

12.6E General Components

One of the primary functions of preventive maintenance schedules is to keep ALL components CLEAN. Newcomers are apt to minimize the importance of this item, but the old timers realize the utmost importance of a clean transmitter. Operation in the VHF and UHF spectrum makes this item extremely important as compared to standard broadcast frequencies.

In routine inspection procedures, note the appearance of all resistors. Blistered or blackened cases are danger signs. Run periodic ohmmeter measurements on all important resistors and note any deviations over a period of time. Many outages may be prevented by this simple precaution.

Transformers should also be observed for any physical signs of deterioration. Feel the coil insulation at periodic intervals for any "softness" or charring tendencies. Adjustable transformers such as line voltage auto-transformers are particularly subject to troubles without good preventive maintenance. Examine the brushes at regular intervals and replace them with the type recommended by the manufacturer *before* undue wear occurs. Test brush springs for tension and tightness of screws holding the brush springs. The brushes and commutator surfaces should be periodically cleaned with a strip of crocus cloth, and dusted with an airstream followed by vacuuming.

Remember that every maintenance schedule is extremely important, and that alertness and calm deliberation followed by positive action pays off with a minimum of operating-time emergencies.

APPENDIX 1

Extracts from FCC Rules and Regulations Most Important to TV Operators

3.639 *Changes in equipment and antenna system.* Licensees of television broadcast stations shall observe the following provisions with regard to changes in equipment and antenna system:

(a) No changes in equipment shall be made:

(1) That would result in the emission of signals outside of the authorized channel.

(2) That would result in the external performance of the transmitter being in disagreement with that prescribed in this subpart.

(b) Specific authority, upon filing formal application therefor (FCC Form No. 301 or such other form as is provided therefor), is required for any of the following changes:

(1) Changes involving an increase or decrease in the power rating of the transmitters.

(2) A replacement of the transmitters as a whole.

(3) Change in the location of the transmitting antenna.

(4) Change in antenna system, including transmission line.

(5) Change in the power delivered to the antenna.

(6) Change in frequency control and/or modulation system.

(c) Other changes, except as above provided for in this section or in the provisions of this subpart, may be made at any time without the authority of the Commission, provided that the Commission shall be promptly notified thereof and such changes shall be shown in the next application for renewal of license.

General Operating Requirements

3.651 *Time of operation.* (a) All television broadcast stations will be licensed for unlimited time operation. Each such station shall maintain a regular program operating schedule as follows: not less than 2 hours daily in any five broadcast days per week and not less than a total of 12 hours per week during the first 18 months of the station's operation; not less than 2 hours daily in any 5 broadcast days per week and not less than a total of 16 hours, 20 hours and 24 hours per week for each successive 6-month period of operation, respectively; and not less than 2 hours in each of the 7 days of the week and not less than a total of 28 hours per week thereafter. "Operation" includes the period during which a station is operated pursuant to special temporary authority or during program tests, as well as during the license period. Time devoted to test patterns, or to aural presentations accompanied by the incidental use of fixed visual images which have no substantial relationship to the subject matter of such aural presentations, shall not be considered in computing periods of program service. If, in the event of an emergency due to causes beyond the control of a licensee, it becomes impossible to continue operation, the Commission and the Engineer in Charge of the radio district in which the station is located shall be notified in writing immediately after the emergency develops and immediately after the emergency ceases and operation is resumed.

(b) Noncommercial education television broadcast stations are not required to operate on a regular schedule and no minimum number of hours of operation is specified; but the hours of actual operation during a license period shall be taken into consideration in considering the renewal of noncommercial educational television broadcast licenses.

(c) (1) The aural transmitter of a television station shall not be operated separately from the visual transmitter except for the following purposes:

(1) For emergency "fills" in case of visual equipment failure or unscheduled and unavoidable delays in presenting visual programs. In such situations the aural transmitter may be used to advise the audience of difficulties and to transmit for a short period program material of such nature that the audience will be enabled to remain tuned to the station; for example, music or news accompanying a test pattern or other visual presentation.

(2) During periods of transmission of a test pattern on the visual transmitter of a television station, aural transmission shall consist only of a single tone or series of variable tones. During periods when still pictures or slides are employed to produce visual transmissions which are accompanied by aural transmissions, the aural and visual transmissions shall be integral parts of a program or announcement and shall have a substantial relationship to each other: *Provided*, That nothing herein shall preclude the transmission of a test pattern, still pictures or slides for the following purposes and periods:

(I) To accompany aural announcements of the station's program schedule and aural news broadcasts or news commentaries, for a total period not to exceed one hour in any broadcast day.

(II) To accompany aural transmissions for a period of time not to exceed fifteen minutes immediately prior to the commencement of a programming schedule.

Examples. (1) Duplication of AM or FM programs on the aural transmitter of a television station while the same program is broadcast on the visual transmitter (i.e., a "simulcast") is consistent with this paragraph.

(2) Duplication of AM or FM programs on the aural transmitter of a television station while a test pattern is broadcast on the visual transmitter is not consistent with this paragraph, except for the specific purposes and periods specified in paragraph (b) (2).

(3) A travel lecture in which the words of the lecturer are broadcast simultaneously with still pictures or slides of scenes illustrating the lecture, and a newscast in which the words of the newscaster are broadcast simultaneously with still pictures or slides of the news events, are examples of programs in which the aural and visual transmissions are integral parts of the same program having a substantial relationship to each other, within the meaning of paragraph (b) (2). Mood music unrelated to the visual transmission is not consistent with this paragraph.

(4) The broadcast of a test pattern accompanied by a musical composition for the purpose of demonstration, sale, installation or orientation of television receivers, or receiving antennas is not consistent with this paragraph.

(5) Music accompanying the transmission of a test pattern upon which is visually imposed a moving text consisting of continuous program material, such as a running newscast or news commentary, is consistent with this paragraph.

(6) Music accompanying the transmission of a test pattern upon which is visually imposed a clock indicating the time of day, or a text that is changed at spaced intervals, is not consistent with this paragraph.

3.652 *Station identification.* (a) licensee of a television broadcast station shall make station identification announcement (call letters and location) at the beginning and ending of each time of operation and during the operation on the hour. The announcement at the beginning and ending of each time

of operation shall be by both aural and visual means. Other announcements may be either aural or visual means.

(b) Identification announcements during operation need not be made when to make such an announcement would interrupt a single consecutive speech, play, religious service, symphony concert, or any type of production. In such cases, the identification announcement shall be made at the first interruption of the entertainment continuity and at the conclusion thereof.

3.653 *Mechanical reproductions.* (a) Each program, which consists in whole or in part of one or more mechanical reproductions, either visual or aural, shall be accompanied by an appropriate announcement to that effect either at the beginning or end of such reproduction or at the beginning or end of the program in which such reproduction is used. No such announcement shall be required where a mechanical reproduction is used for background music, sound effects, station identification, program identification (theme music of short duration) or identification of sponsorship of the program proper.

(b) The exact form of identifying announcement is not prescribed but the language shall be clear and in terms commonly used and understood. The licensee shall not attempt affirmatively to create the impression that any program being broadcast by mechanical reproduction consists of live talent.

3.654 *Sponsored programs, announcement.* (a) In the case of each program for the broadcasting of which money, services, or other valuable consideration is either directly or indirectly paid or promised to, or charged or received by, any television broadcast station, the station broadcasting such program shall make, or cause to be made, an appropriate announcement that the program is sponsored, paid for, or furnished, either in whole or in part.

(b) In the case of any political program or any program involving the discussion of public controversial issues for which any films, records, transcriptions, talent, scripts, or other material or services of any kind are furnished, either directly or indirectly, to a station as an inducement to the broadcasting of such program, an announcement shall be made both at the beginning and conclusion of such program on which such material or services are used that such films, records, transcriptions, talent, scripts, or other material or services have been furnished to such station in connection with the broadcasting of such program: Provided, however, that only one such announcement may be made either at the beginning or conclusion of the program.

(c) The announcement required by this section shall fully and fairly disclose the true identity of the person or persons by whom or in whose behalf such payment is made or promised, or from whom or in whose behalf such services or other valuable consideration is received, or by whom the material or services referred to in paragraph (b) of this section are furnished. Where an agent or other person contracts or otherwise makes arrangements with a station on behalf of another, and such fact is known to the station, the announcement shall disclose the identity of the person or persons in whose behalf such agent is acting instead of the name of such agent.

(d) In the case of any program, other than a program advertising commercial products or services, which is sponsored, paid for or furnished, either in whole or in part, or for which material or services referred to in paragraph (b) of this section are furnished, by a corporation, committee, association or other unincorporated group, the announcement required by this section shall disclose the name of such corporation, committee, association or other unincorporated group. In each such case the station shall require that a list of the chief executive officers or members of the executive committee or of the board of directors of the corporation, committee, association or other unincorporated group shall be made avail-

able for public inspection at one of the television broadcast stations carrying the program.

(e) In the case of programs advertising commercial products or services, an announcement stating the sponsor's corporate or trade name or the name of the sponsor's product, shall be deemed sufficient for the purposes of this section and only one such announcement need be made at any time during the course of the program.

3.660 *Station license, posting of.* The original of each station license shall be posted in the transmitter room.

3.661 *Operator requirements.* One or more licensed radio-telephone first class operators shall be on duty at the place where the transmitting apparatus of each station is located and in actual charge thereof whenever it is being operated. The original license (or FCC Form No. 759) of each station operator shall be posted at the place where he is on duty. The licensed operator on duty and in charge of a television broadcast transmitter may, at the discretion of the licensee, be employed for other duties or for the operation of another station or stations in accordance with the class of operator's license which he holds and by the rules and regulations governing such stations. However, such duties shall in nowise interfere with the operation of the broadcast transmitter.

3.662 *Inspection of tower lights and associated control equipment.* The licensee or permittee of any television broadcast station which has an antenna structure requiring illumination pursuant to the provisions of section 303 (q) of the Communications Act of 1934, as amended:

(a) (1) Shall make an observation of the tower lights at least once each 24 hours either visually or by observing an automatic and properly maintained indicator designed to register any failure of such lights, to insure that all such lights are functioning properly as required; or alternatively.

(2) Shall provide and properly maintain an automatic alarm system designed to detect any failure of such lights and to provide indication of such failure to the licensee.

(b) Shall report immediately by telephone or telegraph to the nearest Airways Communication Station or office of Civil Aeronautics Administration any observed or otherwise known failure of a code or rotating beacon light or top light not corrected within thirty minutes, regardless of the cause of such failure. Further notification by telephone or telegraph shall be given immediately upon resumption of the required illumination.

(c) Shall inspect at intervals not to exceed three months all automatic or mechanical control devices, indicators and alarm systems associated with the tower lighting to insure that such apparatus is functioning properly.

3.663 *Logs, maintenance of.* The licensee or permittee of each television station shall maintain program and operating logs and shall require entries to be made as follows:

(a) In the program log:

(1) An entry of the time each station identification announcement (call letters and location) is made.

(2) An entry briefly describing each program broadcast, such as "music," "drama," "speech," etc., together with the name or title thereof and the sponsor's name, with the time of the beginning and ending of the complete program. If a mechanical reproduction, either visual or aural, is used, the entry shall show the exact nature thereof and the time it is announced as a mechanical reproduction. If a speech is made by a political candidate, the name and political affiliations of such speaker shall be entered.

(3) An entry showing that each sponsored program broadcast has been announced as sponsored, paid for, or furnished by the sponsor; or that the broadcast is under the auspices of a

nonprofit educational organization other than the licensee or permittee.

(4) An entry showing, for each program of network origin, the name of the network originating the program.

(b) In the operating log:

(1) An entry of the time the station begins to supply power to the antenna, and the time it stops.

(2) An entry of the time the program begins and ends.

(3) An entry of each interruption to the carrier wave, its cause, and duration.

(4) An entry of the following each 30 minutes:

(I) Operating constants of last radio stage of the aural transmitter (total plate current and plate voltage).

(II) Transmission line meter readings for both transmitters.

(III) Frequency monitor readings.

(5) Log of experimental operation during experimental period (if regular operation is maintained during this period, the above logs shall be kept).

(I) A log must be kept of all operation during the experimental period. If the entries required above are not applicable thereto, then the entries shall be made so as to describe the operation fully.

(c) Where an antenna and antenna supporting structure(s) is required to be illuminated, the licensee or permittee shall make entries in the radio log as follows:

(1) The time the tower lights are turned on and off each day if manually controlled.

(2) The time the daily check of proper operation of the tower lights was made.

(3) In the event of any observed or otherwise known failure of a tower light:

(I) Nature of such failure.

(II) Date and time the failure was observed, or otherwise noted.

(III) Date, time and nature of the adjustments, repairs, or replacements that were made.

(IV) Identification of Airways Communication Station (Civil Aeronautics Administration) notified of the failure of any code or rotating beacon light not corrected within thirty minutes, and the date and time such notice was given.

(V) Date and time notice was given to the Airways Communication Station (Civil Aeronautics Administration) that the required illumination was resumed.

(4) Upon completion of the periodic inspection required at least once each three months:

(I) The date of the inspection and the condition of all tower lights and associated tower lighting control devices, indicators and alarm systems.

(II) Any adjustments, replacements, or repairs made to insure compliance with the lighting requirements and the date such adjustments, replacements, or repairs were made.

3.664 (a) *Logs, retention of.* Logs of television broadcast stations shall be retained by the licensee or permittee for a period of two years; Provided, however, that logs involving communications incident to a disaster or which include communications incident to or involved in an investigation by the Commission and concerning which the licensee or permittee has been notified, shall be retained by the licensee or permittee until he is specifically authorized in writing by the Commission to destroy them; Provided further, that logs incident to or involved in any claim or complaint of which the licensee or permittee has notice shall be retained by the licensee or permittee until such claim or complaint has been fully satisfied or until the same has been barred by statute limiting the time for the filing of suits upon such claims.

(b) *Logs, by whom kept.* Each log shall be kept by the person or persons competent to do so, having actual knowledge of the facts required, who shall sign the log when starting duty and again when going off duty. The logs shall be made available upon re-

quest by an authorized representative of the Commission.

(c) *Log form.* The log shall be kept in an orderly manner, in suitable form, and in such detail that the data required for the particular class of station concerned are readily available. Key letters or abbreviations may be used if proper meaning or explanation is contained elsewhere in the log.

(d) *Correction of logs.* No log or portion thereof shall be erased, obliterated, or willfully destroyed within the period of retention provided by the rules. Any necessary correction may be made only by the person originating the entry who shall strike out the erroneous portion, initial the correction made, and indicate the date of correction.

(e) *Rough Logs.* Rough logs may be transcribed into condensed form, but in such case the original log or memoranda and all portions thereof shall be preserved and made a part of the complete log.

3.665 *Station inspection.* The licensee of a television broadcast station shall make the station available for inspection by representatives of the Commission at any reasonable hour.

3.666 *Experimental operation.* Television broadcast stations may (upon informal application) conduct technical experimentation directed to the improvement of technical phases of operation and for such purposes may utilize a signal other than the standard television signal subject to the following conditions:

(a) That the licensee complies with the provisions of 3.651 with regard to the minimum number of hours of transmission with a standard television signal.

(b) That no transmissions are radiated outside of the authorized channel and subject to the condition that no interference is caused to the transmissions of a standard television signal by other television broadcast stations.

(c) No charges either direct or indirect shall be made by the licensee of a television broadcast station for the production or transmission of programs when conducting technical experiments.

3.682 *Transmission standards and changes.* (a) *Transmission standards.* (1) The width of the television broadcast channel shall be six megacycles per second.

(2) The visual carrier shall be located 4.5 megacycles lower in frequency than the aural center frequency.

(3) The aural center frequency shall be located 0.25 megacycles lower than the upper frequency limit of the channel.

(4) The visual transmission amplitude characteristic shall be in accordance with the chart designated as Fig. 1.13B (Chapter 1).

(5) For monochrome transmission the number of scanning lines per frame shall be 525 interlaced two to one in successive fields. The frame frequency shall be 30, the field frequency 60, and the line frequency 15,750 per second.

(6) For color transmissions the number of scanning lines per frame shall be 405, interlaced two to one in successive fields of the same color. The frame frequency shall be 72, the field frequency 144, the color frame frequency 24, the color field frequency 48, and the line frequency 29,160 per second.

(7) The aspect ratio of the transmitted television picture shall be 4 units horizontally to 3 units vertically.

(8) During active scanning intervals, the scene shall be scanned from left to right horizontally and from top to bottom vertically, at uniform velocities.

(9) A carrier shall be modulated within a single television channel for both picture and synchronizing signals, the two signals comprising different modulation ranges in amplitude, in accordance with Fig. A-1.

(10) A decrease in initial light intensity shall cause an increase in radiated power (negative transmission).

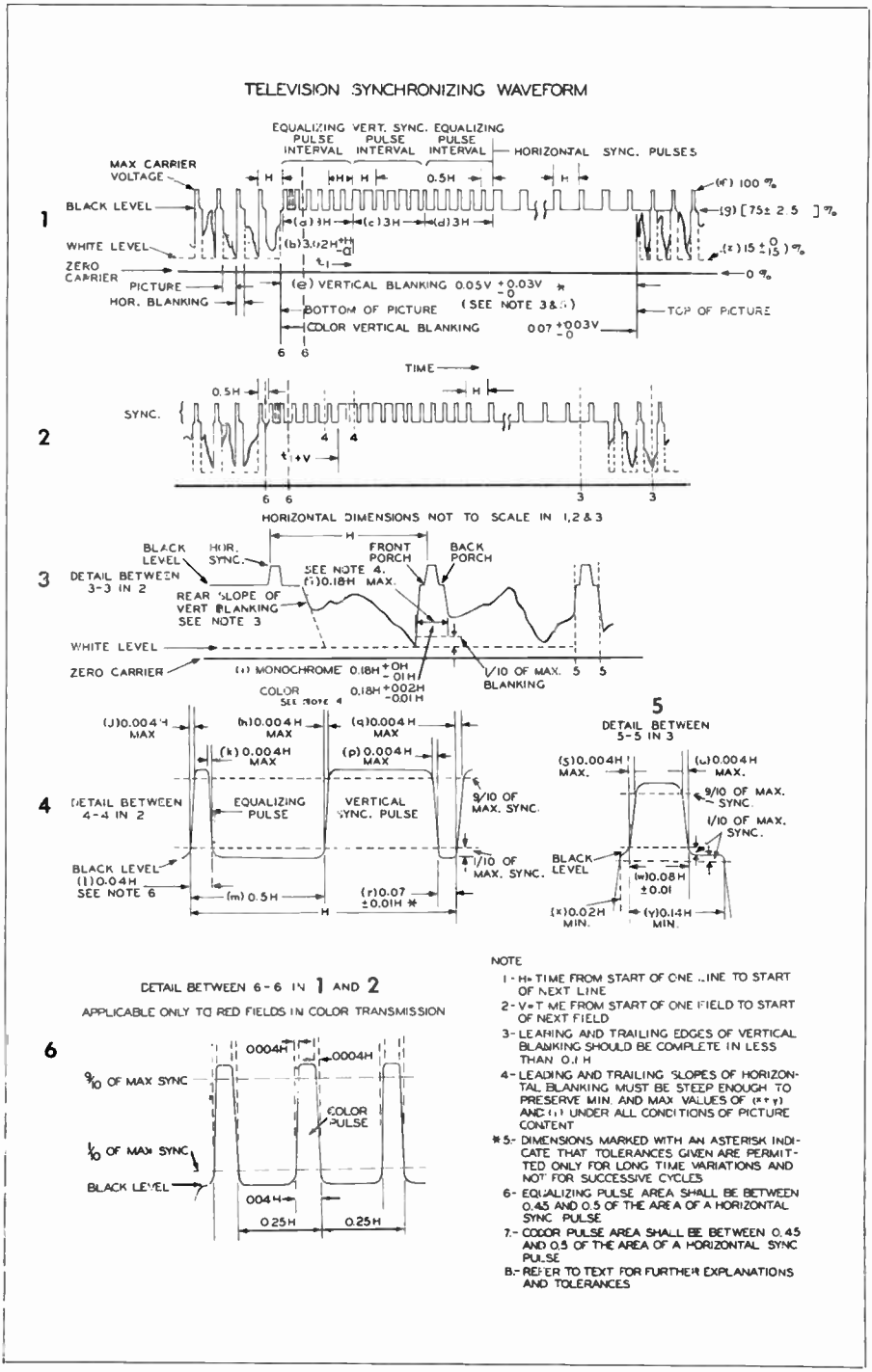

NOTE

1 - H = TIME FROM START OF ONE LINE TO START OF NEXT LINE
2 - V = TIME FROM START OF ONE FIELD TO START OF NEXT FIELD
3 - LEADING AND TRAILING EDGES OF VERTICAL BLANKING SHOULD BE COMPLETE IN LESS THAN 0.1 H
4 - LEADING AND TRAILING SLOPES OF HORIZONTAL BLANKING MUST BE STEEP ENOUGH TO PRESERVE MIN. AND MAX VALUES OF (x + y) AND (i) UNDER ALL CONDITIONS OF PICTURE CONTENT
* 5 - DIMENSIONS MARKED WITH AN ASTERISK INDICATE THAT TOLERANCES GIVEN ARE PERMITTED ONLY FOR LONG TIME VARIATIONS AND NOT FOR SUCCESSIVE CYCLES
6 - EQUALIZING PULSE AREA SHALL BE BETWEEN 0.45 AND 0.5 OF THE AREA OF A HORIZONTAL SYNC PULSE
7 - COLOR PULSE AREA SHALL BE BETWEEN 0.45 AND 0.5 OF THE AREA OF A HORIZONTAL SYNC PULSE
8 - REFER TO TEXT FOR FURTHER EXPLANATIONS AND TOLERANCES

Figure A-1.

(11) The black level shall be represented by a definite carrier level, independent of light and shade in the picture.

(12) The pedestal level (normal black level) shall be transmitted at 75 percent (with a tolerance of plus or minus 2.5 percent) of the peak carrier amplitude.

(13) The level at maximum luminance shall be 15% or less of the peak carrier level.

(14) The signals radiated shall have horizontal polarization.

(15) A radiated power of the aural transmitter not less than 50 percent nor more than 150 percent of the peak radiated power of the video transmitter shall be employed.

(16) Variation of output. The peak-to-peak variation of transmitter output within one frame of video signal due to all causes, including hum, noise, and low-frequency response, measured at both synchronizing peak and pedestal level, shall not exceed 5 percent of the average synchronizing peak signal amplitude.*

(17) Black level. The black level should be made as nearly equal to the pedestal as the state of the art will permit. If they are made essentially equal, satisfactory operation will result and improved techniques will later lead to the establishment of the tolerance if necessary.*

(18) Brightness characteristics. The transmitter output shall vary in substantially inverse logarithmic relation to the brightness of the subject. No tolerances are set at this time.*

(19) The color sequence for color transmission shall be repeated in the order red, blue, green, in successive fields.

3.687 *Transmitters and associated equipment.* (a) *Visual transmitter.* (1) The over-all attenuation characteristics of the transmitter, measured in the antenna transmission line after the vestigial sideband filter (if used), shall not be greater than the following amounts below the ideal demodulated curve. (See Fig. A-2).

2 db at 0.5 mc
2 db at 1.25 mc
3 db at 2.0 mc
6 db at 3.0 mc
12 db at 3.5 mc

The curve shall be substantially smooth between these specified points, exclusive of the region from 0.75 to 1.25 mc.[1]

(2) The field strength or voltage of the lower sideband, as radiated or dissipated and measured as described in subparagraph (3) of this paragraph, shall not be greater than —20 db for a modulation frequency of 1.25 mc or greater.[2]

(3) The attenuation characteristics of a visual transmitter shall be measured by application of a modulating signal to the transmitter input terminals in place of the normal composite television video signal. The signal applied shall be a composite signal composed of a synchronizing signal to establish peak output voltage occupying the interval between synchronizing pulses. The axis of the sine wave in the composite signal observed in the output monitor shall be maintained at an am-

* These items are subject to change but are considered the best practice under the present state of the art. They will not be enforced pending a further determination thereof.

[1] Output measurement shall be made with the transmitter operating into a dummy load of pure resistance and the demodulated voltage measured across this load. The ideal demodulated curve is that shown in Fig. A-2.

[2] Field strength measurements are desired. It is anticipated that these may not yield data which are consistent enough to prove compliance with the attenuation standards prescribed above. In that case, measurements with a dummy load of pure resistance, together with data on the antenna characteristics, shall be taken in place of over-all field measurements. The "synchronizing signal" referred to in these paragraphs means either a standard synchronizing wave form or any pulse that will properly set the peak.

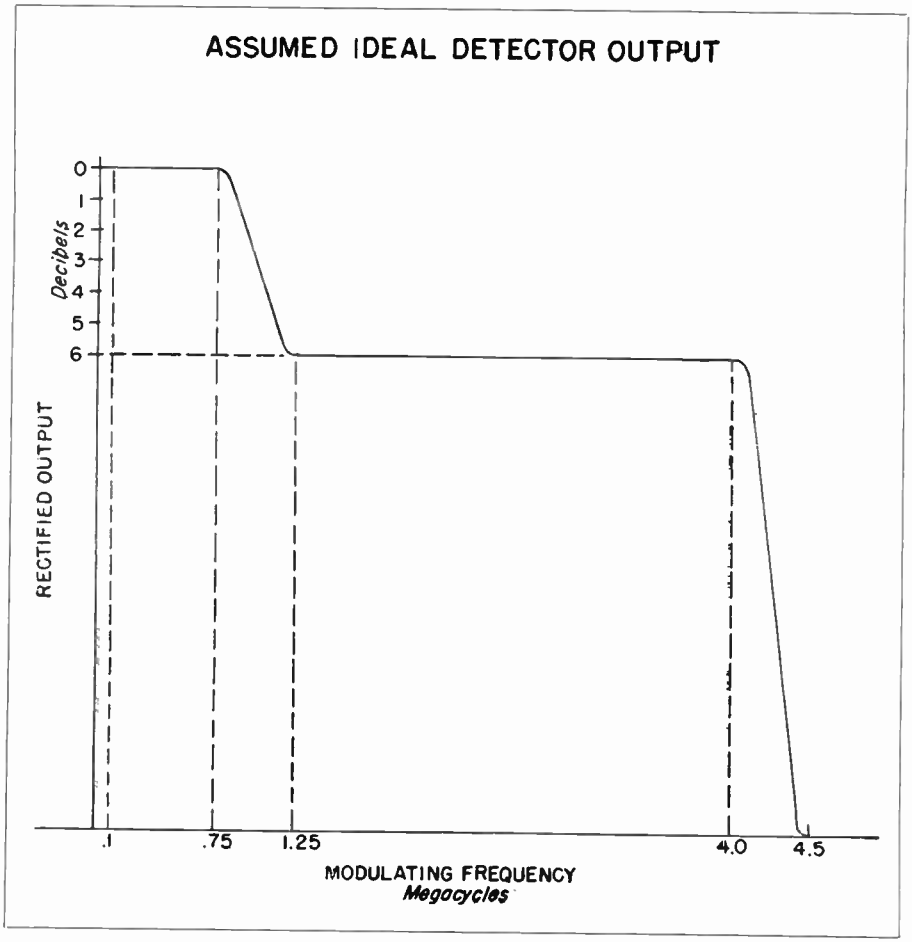

Figure A-2.

plitude 0.5 of the voltage at synchronizing peaks. The amplitude of the sine wave input shall be held at a constant value. This constant value should be such that at no modulating frequency does the maximum excursion of the sine wave, observed in the composite output signal monitor, exceed the value 0.75 of peak output voltage. The amplitude of the 100-kilocycle sideband shall be measured and designated zero db as a basis for comparison. The modulation signal frequency shall then be varied over the desired range of the corresponding sidebands measured. As an alternate method of measuring, in those cases in which the automatic d-c insertion can be replaced by manual control, the above characteristic may be taken by the use of a video sweep generator and without the use of pedestal synchronizing pulses. The d-c level shall be set for midcharacteristic operation.

(4) The radio frequency signal, as radiated, shall have an envelope as would be produced by a modulating signal in conformity with Figure A-1, as modified by vestigial sideband operation.

(5) The time interval between the leading edges of successive horizontal pulses shall vary less than one-half of 1 percent of the average interval.

(6) The rate of change of the frequency of recurrence of the leading edges of the horizontal synchronizing signals shall not be greater than 0.15 percent per second, the frequency to be determined by an averaging process carried out over a period of not less than 20, nor more than 100 lines, such lines not to include any portion of the vertical blanking signal.

(7) Sufficient monitoring equipment shall be employed to determine whether the visual signal complies with the requirements of this subject.

(b) *Aural transmitter.* (1) The transmitter shall operate satisfactorily with a frequency swing of ±25 kilocycles, which is considered 100 percent modulation. It is recommended, however, that the transmitter be designed to operate satisfactorily with a frequency swing of at least ±40 kilocycles.

(2) The transmitting system (from input terminals of microphone preamplifier, through audio facilities at the studio, through telephone lines or other circuits between studio and transmitter, through audio facilities at the transmitter, and through the transmitter, but excluding equalizers for the correction of deficiencies in microphone response) shall be capable of transmitting a band of frequencies from 50 to 15,000 cycles. Pre-emphasis shall be employed in accordance with the impedance-frequency characteristic of a series inductance-resistance network having a time constant of 75 microseconds.

(3) At any modulating frequency between 50 and 15,000 cycles and at modulation percentages of 25 percent, 50 percent, and 100 percent, the combined audio frequency harmonics measured in the output of the system shall not exceed the root-mean-square values given in the following table:

Modulation frequency	Distortion (percent)
50 to 100 cycles	3.5
100 to 7,500 cycles	2.5
7,500 to 15,000 cycles	3.0

(I) Measurement shall be made employing 75 microseconds de-emphasis in the measuring equipment and 75 microsecond pre-emphasis in the transmitting equipment, and without compression if a compression amplifier is employed. Harmonics shall be included to 30 kc.[1]

(II) It is recommended that none of the three main divisions of the system (transmitter, studio to transmitter circuit, and audio facilities) contribute over one-half of these percentages since at some frequencies the total distortion may become the arithmetic sum of the distortions of the divisions.

(4) The transmitting system output noise level (frequency modulation) in the band of 50 to 15,000 cycles shall be at least 55 db below the audio frequency level representing a frequency swing of ±25 kc.[2]

(5) The transmitting system output noise level (amplitude modulation) in the band of 50 to 15,000 cycles shall be at least 50 db below the level representing 100 percent amplitude modulation.[2]

(6) If a limiting or compression amplifier is employed, precaution should be maintained in its connection in the circuit due to the use of pre-emphasis in the transmitting system.

(7) A modulation monitor shall be in operation at the aural transmitter. The percentage of modulation of the aural transmissions shall be maintained

[1] Measurements of distortion using de-emphasis in the measuring equipment are not practical at the present time for the range 7,500 to 15,000 cycles for 25 and 50 percent modulation. Therefore, measurements should be made at 100 percent modulation and on at least the following modulating frequencies: 50, 100, 400, 1,000, 5,000, 10,000 and 15,000 cycles. At 25 and 50 percent modulation, measurements should be made on at least the following modulating frequencies: 50, 100, 400, 1,000 and 5,000 cycles.

[2] For the purpose of these measurements, the visual transmitter should be inoperative since the exact amount of noise permissible from that source is not known at this time.

as high as possible consistent with good quality of transmission and good broadcast practice and in no case less than 85 percent nor more than 100 percent on peaks of frequent recurrence during any selection which normally is transmitted at the highest level of the program under consideration.

(c) *Requirements applicable to both visual and aural transmitters.* (1) Automatic means shall be provided in the visual transmitter to maintain the carrier frequency within one kilocycle of the authorized frequency; automatic means shall be provided in the aural transmitter to maintain the carrier frequency within four kilocycles of the assigned aural carrier frequency or, alternatively, 4.5 megacycles above the actual visual carrier frequency within five kilocycles. When required by 3.606, the visual and aural carrier frequencies are to be offset in frequency by 10 kilocycles (plus or minus, as indicated) from the normal carrier frequencies.

(2) The transmitters shall be equipped with suitable indicating instruments for the determination of operating power and with other instruments necessary for proper adjustment, operation, and maintenance of the equipment.

(3) Adequate provision shall be made for varying the output power of the transmitters to compensate for excessive variations in line of voltage or for other factors affecting the output power.

(4) Adequate provisions shall be provided in all component parts to avoid overheating at the rated maximum output powers.

(5) Frequency monitors for the visual and aural transmitters, independent of the frequency control of the transmitters, shall be in operation at the transmitters.

(6) In the event the visual monitoring equipment, the aural modulation monitor, or the visual or aural frequency monitor becomes defective, the station may be operated without such equipment pending its repair or replacement for a period not in excess of 60 days without further authority of the Commission: *Provided*, That —

(I) Appropriate entries shall be made in the operating log of the station to show the date and time the equipment was removed from and restored to service.

(II) The Engineer in Charge of the radio district in which the station is located shall be notified both immediately after the equipment is found to be defective and immediately after the repaired or replacement equipment has been installed and is functioning properly.

(III) During the period when the station is operated without the aural modulation monitor or the visual monitoring equipment, the licensee shall provide other suitable means for insuring that the aural modulation is maintained within the tolerance prescribed in paragraph (b) (7) of this section and that the visual signal is maintained in accordance with the requirements of this subpart.

(IV) During the period when the station is operated without the visual or aural frequency monitor, the respective carrier frequency shall be compared with an external frequency source of known accuracy at sufficiently frequent intervals to insure that the frequency is maintained within the tolerance prescribed in subparagraph (1) of this paragraph. An entry shall be made in the station log as to the method used and the results thereof.

(V) If conditions beyond the control of the licensee or permittee prevent the restoration of the monitor or monitoring equipment to service within the above allowed period, an informal request in accordance with 1.332 (d) may be filed with the Engineer in Charge of the radio district in which the station is located for such additional time as may be required to complete repairs of the defective instrument equipment.

(h) *Spare tubes.* (1) A spare tube of every type employed in the transmitters and the frequency and modulation moni-

tors shall be kept on hand at the equipment location. When more than one tube of any type is employed, the following table determines the number of spares of that type required:

Number of each type employed:	Spares required
1 or 2	1
3 to 5	2
6 to 8	3
9 or more	4

(2) An accurate circuit diagram and list of required spare tubes, as furnished by the manufacturer of the equipment, shall be supplied and retained at the transmitter location.

(I) *Operation.* (1) Spurious emissions, including radio frequency harmonics, shall be maintained at as low a level as the state of the art permits.

(2) If a limiting or compression amplifier is used in conjunction with the aural transmitter, due operating precautions should be maintained because of pre-emphasis in the transmitting system.

3.689 *Operating power* — (a) *Determination* — (1) *Visual transmitter.* The operating power of the visual transmitter shall be determined at the output terminal of the vestigial sideband filter, if such filter is used; otherwise, at the transmitter output terminal. The average power shall be measured while operating into a dummy load of substantially zero reactance and a resistance equal to the transmission line surge impedance, while transmitting a standard black television picture. The peak power shall be the power obtained by this method, multiplied by the factor 1.68. During this measurement the direct plate voltage and current of the last radio stage and the peak output voltage or current shall be read for use below.

(2) *Aural transmitter.* The operating power of the aural transmitter shall be determined by the indirect method. This is the product of plate voltage (Ep) and the plate current (Ip) of the last radio stage, and an efficiency factor, F; that is:

$$\text{Operating power} = E_p \times I_p \times F$$

(I) The efficiency factor, F, shall be established by the transmitter manufacturer for each type of transmitter for which he submits data to the Commission, and shall be shown in the instruction books supplied to the customer with each transmitter. In the case of composite equipment, the factor F shall be furnished to the Commission by the applicant along with a statement of the basis used in determining such factor.

(b) *Maintenance* — (1) *Visual transmitter.* The peak power shall be monitored by a peak reading device which reads proportionately to voltage, current, or power in the radio frequency transmission line, the meter to be calibrated during the measurement described in paragraph (a) (1) of this section. The operating power as so monitored shall be maintained as near as practicable to the authorized operating power and shall not exceed the limits of 10 percent above and 20 percent below the authorized power except in emergencies. As a further check, both the plate voltage and plate current of the output stage shall be measured with a standard black television picture with the transmitter operating into the antenna. These values must agree substantially with corresponding readings taken under paragraph (a) (1) of this section.

(2) *Aural transmitter.* The operating power of the aural transmitter shall be maintained as near as practicable to the authorized operating power and shall not exceed the limits of 10 percent above and 20 percent below the authorized power except in emergencies.

(3) *Reduced power.* In the event it becomes impossible to operate with the authorized power, the station may be operated with reduced power for a period of 10 days or less provided the Commission and the Engineer in Charge of the radio district in which the station is located shall be notified in writing immediately thereafter and also upon the resumption of the normal operating power.

APPENDIX 2

TV Technical Definitions and Glossary of Production Terms Applicable to Television Broadcasting

A

ABERRATION, chromatic: Image defect due to variations in bending of light rays differing in color, by the lens.

ABERRATION, spherical: Lens defect resulting in production of a disc of light rather than a point of light, which has a definite minimum size not reducable by focusing. It *may* be reduced by "stopping down" the lens. (Using smaller iris opening).

A-C TRANSMISSION: The output signal of the TV camera contains instantaneous voltage changes corresponding to the brightness of each element of the scene as it is scanned. In a-c transmission systems, a fixed setting of controls makes any instantaneous value of *signal* correspond to the same value of *brightness* only for a short time. According to the definition in the IRE standards: this time is not longer than one field period, and may be as short as one line period. (See DC VIDEO COMPONENT and DC RE-INSERTION).

ACHROMAT: Lens corrected for chromatic aberration.

ACTIVE LINES: Lines which contain picture information as distinguished from the lines occurring during the blanking interval which produces horizontal and vertical retrace of the scanning beam.

AMPLITUDE MODULATION: (AM): The method of modulating the visual RF carrier in which the instantaneous amplitude of the carrier is proportional to the instantaneous value of the modulating video voltage.

ANGULAR FIELD: The greatest angle covered horizontally or vertically by a particular lens.

ANTENNA FIELD GAIN: In radio theory a "standard doublet" is a doublet antenna which with one kilowatt of input power gives an effective free-space field intensity of 137.6 millivolts per meter at one mile distance. ANTENNA FIELD GAIN is the ratio of the antennas' free-space field intensity produced at one mile in the horizontal plane to the "standard doublet" value, expressed in mv/m. Thus field gain is:

$$\text{F.G.} = \frac{\text{new mv/m}}{137.6 \text{ mv/m}}$$

ANTENNA HEIGHT ABOVE AVERAGE TERRAIN: The average of the antenna height (center of radiating portion) above the terrain from 2 to 10 miles from the antenna. The FCC Standards state that at least 8 radials 2 to 10 miles long at approximately 45 degree angles are to be plotted on the data sheet. In general a different antenna height will be determined in each direction. The average of these heights is considered the antenna height above average terrain.

ANTENNA POLARIZATION: Direction of the electric vector as radiated from the transmitting antenna. TV Standards call for horizontal polarization of the transmitted signal.

ARTIFICIAL LOAD: A "dummy antenna" which is essentially a non-reactive, resistive dissipating device and non-radiating, with the same characteristic impedance as the transmission line.

ASPECT RATIO: Numerical ratio of picture width to picture height. TV Standards specify an aspect ratio of 4 to 3; or 4 units wide to 3 units high. Thus a picture 4 feet wide should be 3 feet high. A picture 8 feet wide should be 6 feet high, etc.

ASSYMETRIC SIDEBAND TRANSMISSION: (See Vestigial Sideband Transmission).

ATTENUATOR (Fader): Control used for adjusting gain of video or audio circuits.

AUDIO CHANNEL: The RF carrier frequency located 4.5 mc higher than the accompanying video carrier frequency in each TV band. This carrier is frequency modulated. A carrier swing of ± 25 kc equals 100% modulation. An AUDIO CHANNEL may also be any aural circuit at the studio as distinguished from channels concerning video signals.

AURAL TRANSMITTER: The transmitter in the TV system concerned with the audio signal only. The aural carrier is frequency modulated with the program sound components.

AVERAGE POWER OUTPUT: Average power of the video transmitter is measured with final power amplifier loaded by a dummy antenna. The measurement is made while transmitting a standard black signal. The average power (P_{av}) is:

$$P_{av} = I_{rms}^2 R \text{ or: } P_{av} = \frac{E_{rms}^2}{R}$$

The peak power of the video transmitter is found by the same method, multiplied by the factor 1.68. The readings of I or E are taken from the readings of the final PA stage meters. The average power of the aural TV transmitter is found by the same formula as that of the visual transmitter. Since FM is used, the reading should be the same modulated as unmodulated. Since sine waves are concerned here, ordinary ac theory is used, and a multiplying factor 1.414 is used to find the peak value. The average value is then 0.636 times the peak value.

B

BACKGROUND: The average illumination of the transmitted scene represented by the dc component of the video signal content. (See DC Video Component).

BACK-PORCH: That portion of the composite video signal at blanking level which lies between the trailing edge of the horizontal sync pulse and the trailing edge of the horizontal blanking pulse. Maximum value is 3.81 microseconds.

BALUN: (BAZOOKA): Device for coupling a balanced RF output stage to an unbalanced transmission line. (One side grounded).

BANDWIDTH: The number of cycles-per-second between lowest and highest frequencies. The standard TV channel is 6 mc wide.

BEAM CURRENT: Measurement (usually in microamps) of the electrical current comprising the beam of electrons in pickup tube, picture tube, etc.

BI-DIRECTIONAL: Microphone patterns signifying sensitivity on both the front and rear, but dead at both sides. A "figure eight" response.

BIRDSEYE: Type of lighting unit having self-contained reflector throwing a floodlight. Incandescent type.

BLACK COMPRESSION: Amplitude limiting of the signals corresponding to black in the picture, resulting from loss of *setup* in the picture. (See SETUP). This allows extension of picture black into the blanking region. Thus the tonal

gradient is modified deteriorating the picture quality.

BLACK LEVEL: The amplitude of the modulated RF video carrier at which the beam in the picture tube is extinguished so that retrace lines (which are instigated during the blanking interval) are not visible on the picture tube.

"BLACKER-THAN-BLACK" (Infra-Black): That portion of the RTMA Standard Television Signal which is of an amplitude greater than black level (blanking or pedestal level). This region is occupied by the horizontal and vertical synchronizing pulses.

BLANKING PULSES: Pulses of such amplitude as to cut-off the beam in the picture tube by driving the kinescope grid below cutoff. This sets the "black level" of the signal. (See BLACK LEVEL).

BLIZZARD HEAD: A blond.

BOOM: Either microphone or camera mount. A boom is capable of extending the mic or camera over the heads of performers.

BRIDGING: The act of connecting a high-impedance device in parallel with a given source so as to extract a portion of the signal voltage without perceptable effect on the source circuit.

BUSY PICTURE: Too much in shape or background.

BUTTON-HOOK: Micro-Wave guide, attached to the unit that reflects the microwave signals to the studio or transmitter from a program remote from the studio.

C

CAMERA: An electro-optical transducer which converts light-rays reflecting from the scene to be televised into corresponding electrical impulses at a synchronized rate. The camera includes the pickup tube (image orthicon or iconoscope), deflection circuits, signal preamplifier and viewfinder.

CAMERA CONTROL UNIT: A control panel with internal amplifiers and control circuits connected to camera and to sync generator. Supplies camera driving pulses and other currents to camera, and receives video signal *from* camera preamplifier in pickup head.

CANS: Earphones.

CARBON ARC LIGHT: High intensity light from burning carbon units. Almost duplicates sunlight in characteristics. Has 6400° Kelvin, signifying all colors of spectrum well balanced. Mostly used for floodlighting. May also be used for spotlighting. Excellent for color television due even distribution of colors contained.

CARRIER: Radio-frequency wave suitable for modulation by a signal source.

CARRIER FREQUENCY: Frequency in cps of the RF carrier wave.

CARRIER FREQUENCY STABILITY: Measure of the ability of the frequency controlling circuits to maintain the assigned frequency of operation.

CARRIER NOISE: Undesired variations in the RF carrier not caused by signal content.

CARRIER REFERENCE WHITE LEVEL: Carrier amplitude corresponding to reference white in the visual carrier wave. This is 12½% (± 2½%) of maximum carrier amplitude.

CAVITY RESONATOR: Space enclosed by conducting walls of given dimensions within which resonant RF fields may be excited and extracted.

CENTER FREQUENCY: Term applied to the unmodulated aural carrier wave, designating frequency of operation. It is also defined as the average frequency of the emitted wave when frequency modulated by a pure sinusoidal signal.

CHINA MARKING: Marks or lines made on the face of a cathode ray tube by a china marker for reference purposes.

CLAMPING CIRCUIT: A circuit which maintains either the blanking level or sync tip level of the voltage wave at a predetermined DC level. This maintains the DC component in an AC coupled amplifier, and minimizes AC sine-wave (hum) pickup.

CLOSEUP: Unless otherwise directed, the closeup shot should include the head and shoulders of the specified person.

COLOR TRANSMISSION: Transmission of TV signals capable of reproduction with different color values.

COMPOSITE VIDEO SIGNAL: The complete visual waveform composed of visual picture modulation, blanking pedestal, sync and equalizing pulses. The RF carrier modulated with this signal contains 75% modulation at the pedestal level, and the remaining 25% contains the synchronizing information.

COMPOUND LENS: Lens consisting of two or more elements of glass, sometimes cemented together.

CONTRAST: Scenic range of dark to light values, in proportion to the signal voltage variation at the grid of the picture tube.

COVER SHOT: The director wants the picture to cover the entire scene of action. As used in baseball pickups, coverage of pitcher-batter-catcher and umpire.

CRANE: Camera mount. Extends camera over heads of performers.

CROSS-NEUTRALIZATION: Type of neutralization used in push-pull RF amplifiers. A portion of the cathode-plate ac voltage of each tube is coupled into the cathode-grid circuit of the other tube by means of a neutralizing capacitor.

CROSS-TALK: Interfering signals in any particular channel inductively or capacitively coupled from other circuits. Good installation practice requires all high-level circuits to be run at sufficient distance from low-level circuits to aid in preventing cross-talk.

D

DC REINSERTION: The act of restoring a given potential to a given value, equivalent to the dc picture component ordinarily lost in AC coupled systems.

DC RESTORER: Circuit providing means of restoring the DC or low-frequency components of a video signal after loss through AC coupled systems.

DC VIDEO COMPONENT: The portion of the composite video signal resulting from the average steady background illumination of the televised scene.

DEFINITION: Quality of the fine details in the image produced.

DIMMER: Light control used to regulate current supplied to lights by varying resistance in the circuit. Allows exact control of lighting intensity.

DISH: Large metal microwave reflector.

DISSOLVE: Reduction of video gain toward black level.

DOLLY (Noun): Mobile camera mount.

DOLLY (Verb): "Dolly in." (Move toward scene). "Dolly out." (Move away from scene).

DOUBLE-TUNED CIRCUIT: Two single-tuned circuits inductively coupled, resulting in a double-tuned circuit.

DRIVER: The stage which supplies input power to the driven stage.

DRIVING PULSES: Signals which "drive" the scanning generators in the cameras at the studio. These are supplied to the camera chains by the sync generator, timed and correctly related to the transmitted sync and blanking pulses.

DUMMY ANTENNA: (See Artificial Load).

E

EFFECTIVE RADIATED POWER: (ERP): The product of the antenna power (actual measured output power from transmitter minus transmission line losses) times (1) antenna power gain, or (2) square of the antenna field gain.

ELECTRON MULTIPLIER: Electron tube containing a number of electrodes of high secondary-electron emission characteristics, which greatly multiply the initial impinging electron stream.

EQUALIZING PULSES: A series of pulses, six before and six after, the serrated vertical sync pulses at twice the line frequency (31,500 cps). Used to insure correct timing of the vertical retrace at the receiver for proper interlace.

EQUIVALENT FOCUS: Same as Focal Length.

F

f:NUMBER: A number measuring the light-gathering power of a lens, or "speed" of a lens. This number is related to the ratio of the focal length to the diameter of the beam of light which gets through the lens. The smaller the f:number, the more the light. The sensitivity varies as the *square* of the f:number. *Doubling* the f: *decreases* the light by 4.

FADE IN OR OUT: Applied to either video or audio. The action of fading in or out of the signal by controls. (See Attenuator).

FADER: (See Attenuator).

FIELD: One complete scanning of alternate lines on the scanned area, including vertical retrace back to top of area.

FIELD FREQUENCY: The time required for one field is 1/60 sec. Therefore the number of fields transmitted per second is 60, which designates a field frequency of 60 cps. Two fields constitute one picture frame (See Frame and Frame Frequency).

FLARE: Distribution of extraneous light.

FLYBACK: The shortest period of the two basic periods of a saw-tooth wave, which initiates the return of the electron beam at the end of each scanning line.

FOCAL LENGTH: (Of a lens). Distance from lens to focal point behind lens. Determines scale of reproduction.

FOCUSING: Adjustment of distance between lens and photocathode so that focus of any given point (or group of points) lies "in focus" on the surface of the photocathode. ELECTRICAL FOCUS is to adjust the electron beam to the smallest possible diameter.

FOLLOW SHOT: (See Travel Shot).

FRAME: One complete picture. In the standard TV interlaced method of scanning, one frame consists of two fields, each field having scanned alternate lines.

FRAME FREQUENCY: The number of complete pictures (frames) transmitted per second. This is 30, or 30 cps frame frequency.

FRAMING: The act of the TV film projector operator in adjusting the projection and pickup system so that the picture is so placed on the iconoscope mosaic that the edges or frame are not visible.

FREE SPACE FIELD INTENSITY: The field intensity that would exist at a point in the absence of waves reflected from the earth or other reflecting objects.

FREEZE IT: Use set as is.

FREQUENCY DIVIDER: Circuit for delivering an output signal frequency which is a proper fraction of the input signal frequency. Multivibrators, blocking-tube oscillators, and diode-counter circuits are the most widely used frequency dividers in TV systems.

FREQUENCY MODULATION: (FM): System of modulation in which the *frequency* of the radio carrier is varied in proportion to the *amplitude* of the modulating signal. The instantaneous frequency of the carrier wave is independent of the modulating signal frequency. The amplitude of the RF carrier undergoing FM remains the same as when not modulated.

FREQUENCY SWING: In FM, the instantaneous departure of the frequency of the RF carrier from the center frequency resulting from modulation.

FRONT PORCH: That portion of the horizontal blanking interval between the leading edge of the pedestal pulse and the leading edge of the horizontal sync pulse constructed thereon. Standard RTMA duration is 1.27 microsec.

FROST: Frost gelatin put over lamps to diffuse lights.

G

GAMMA: Plot on logarithmic scale showing the slope of the characteristic expressing the output amplitude as a function of the input amplitude. This curve illustrates the ratio of the contrast between designated elements in the picture to the same elements in the scene being televised.

GARBAGE CAN: Slanguage for microwave-relay transmitter.

GATE: Circuit used for gating, such as "keying on" certain pulses while not acting upon other signal information.

GHOSTS: Two or more images on receiver kinescope caused by reflection of the picture signal from large objects, causing delay of a fraction of a second between original and reflected signals. May also be caused by missmatched or reactive transmission line.

GOBO: Sudden decrease of light in picture. Opposite of "womp."

GRADIENT: Progressive change in tones or shades along a monochromatic scale. (See Monochromatic Transmission).

GROUNDED-GRID AMPLIFIER: Often used in RF television amplifiers to avoid necessity of neutralizing and for greater efficiency under certain conditions. The control grid is placed at ground potential (insofar as the operating frequency is concerned) and the RF excitation is applied between cathode and ground. Output is taken from plate to ground.

GROUP SHOT: The director intends for the camera shot to include a specified group of persons.

GUARD BAND: Vacant frequency band between two channels to avoid mutual interference.

H

HEAD ROOM: The director wants more space above the person or object, and the cameraman tilts the camera up, or "pans up."

HIGH-HAT: High camera position on table top or other waist-high platform or mounting.

HIGH-LEVEL MODULATION: In television video transmitters, grid modulation of the final power amplifier stage.

HORIZONTAL BLANKING: The act of cutting off the electron beam at the end of each scanned line for the retrace interval.

HORIZONTAL BLANKING PULSE: The pedestal level of the composite video signal which is of sufficient amplitude to drive the picture tube into the cut-off region.

HORIZONTAL FREQUENCY (Line Frequency): The repetition rate of the horizontal lines per second. In the standard TV signal the rate is 15,750 cps.

HORIZONTAL RETRACE: (See Flyback).

HORIZONTAL SYNC PULSE: Rectanglar-shaped pulses above pedestal level, to time the horizontal scanning at the receiver with that in the camera at the studio.

I

ICONOSCOPE: A camera pickup tube employing a high-velocity scanning beam to a photoactive mosaic exhibiting electrical storage properties. This tube is used mainly in TV film cameras.

IMAGE ORTHICON: A camera pickup tube employing a low-velocity beam to scan a *target* upon which an image is placed by optical focusing of an image on a separate photo-emissive surface whose secondary electrons impinge upon the scanned target. This is the "image section" of the tube which exhibits an "image multiplier" action. Electron multiplication also takes place in the tube by "dynode" action on the modulated return beam within the tube. This pickup tube is used in nearly all studio and field cameras for telecasting live shows.

INFRA-BLACK: (See Blacker-Than-Black).

INTERLACE: Method of scanning in which one-half the total lines (262.5 lines) are scanned in one field of *even-numbered* lines, and the other half of the total number of lines are scanned in the next field of *odd-numbered* lines. Thus adjacent lines of a complete picture (one frame) belong to successive fields.

J

JITTER: Term usually given to a picture on the kinescope exhibiting instability in the vertical direction. Most often occurs at studios from film projectors which are out of adjustment or from "fluttering" film in the film gate.

K

KEYING CIRCUIT: Circuit used to electronically "key on" or "key off" by trigger action from designated pulses.

KEYSTONE EFFECT: This refers to a trapezoid shape of the picture (Narrower at top than at bottom) that results from linear scanning of an Iconoscope tube due to the difference of the mosaic direction with scanning beam direction. The effect is compensated in practice by "keystone correction circuits" at the Iconoscope tube position.

KINESCOPE: Picture tube in monitors and home receivers.

L

LENS: Optically ground and polished glass, used to focus an image of the scene onto the photosensitive surface of the pickup tube.

LENS COATING: Thin film of fluoride on lens to enhance light-passing characteristics by reducing amount of light reflected at the glass surface. Reduces *flare*.

LEVEL: The amplitude of a video or audio signal. Video signal level is usually referred to in terms of volts, while audio level is measured in volume units. (VU).

LIMITER: Circuit in which all output levels are limited to a given amplitude when the input level is sufficient to operate the limiting action. Used ahead of detectors in FM receivers (for example) to eliminate response to any amplitude variations of the RF carrier.

LIMITER AMPLIFIER: Audio amplifier used (ordinarily) at the transmitter to limit the amplitude of the output signals when input levels exceed a given amplitude. Prevents overmodulation of the aural transmitter.

LINE FREQUENCY: (See Horizontal Frequency).

LINEARITY: The shape of the horizontal and vertical scanning waves. If

this shape traces a straight inclined line (indicating same "rate of rise" properties throughout the curve) the picture will be linear and the picture elements uniformly distributed over the image field.

LINEARITY CONTROL: Control to vary the shape of the scanning voltage trace so that overall effect is a linear curve.

LINK: Channel or circuit connected in tandem with other channels or circuits. May also refer to an RF Studio-to-transmitter link to relay TV programs without use of a coaxial cable.

LOOSEN SHOT: Command given by director meaning he wants more space around the object, person or scene.

LOSE ONE (or Two, Three, etc.): Directors' cue to switcher engineer to remove a superimposure. The number One or Two, etc., refers to camera number.

LOW-LEVEL MODULATION: Modulation in some low-power RF stage before the final RF power amplifier.

M

MEDIUM SHOT: Unless otherwise directed, the picture coverage should include from the waist-up of the specified person. This may also define a "medium" area of any given scene.

MERCURY VAPOR LIGHT: "Cold" light. So called because little heat is radiated for the amount of light effected. Developed by General Electric. A tiny pool of mercury is "fired" in small quartz tubes about the size of a king-sized cigarette. The tube is surrounded by a larger glass tube (called the "capillary") through which about a gallon of water per minute flows. More efficient than incandescents. Color characteristics: opposite of incandescents, being low at red-end (heat rays), and high at blue-violet range of the spectrum.

MIXER (Fader): (See Attenuator).

MIXER-SWITCHER UNIT: Video unit at which a single video source may be selected for transmission, or two video sources combined to achieve a superimposure.

MODULATED AMPLIFIER: The RF stage in which modulation takes place.

MODULATION CAPABILITY: In the aural transmitter, the maximum modulation which can be obtained without exceeding a given percentage of distortion. The minimum standard set by the RTMA specifies no more than 5% distortion for a frequency swing of ±50 kc. (100% modulation is referred to ±25 kc).

In the video transmitter, modulation capability is defined in terms of change in pedestal level when going from an "all-black" signal to an "all-white" signal.

MONOCHROME TRANSMISSION: Transmission of signals which can be reproduced in gradations of the "gray scale" only, from black to white. (Without color).

MONOSCOPE: A camera at the studio employing a cathode ray tube with a fixed internal test pattern for testing and adjusting purposes.

MOSAIC: The photo-sensitive surface in an Iconoscope tube from which the image pattern is discharged by the scanning beam.

MULTIPLEXER: Device employing two mirrors to permit use of only one TV Film Camera with two TV Film Projectors.

MULTIVIBRATOR: Form of relaxation oscillator comprising two stages arranged so that the input of one stage is derived from the output of the other. The period of oscillation is determined by the RC network used between the stages. The circuit may be "free-running" in this manner, or "driven" by injecting a trigger or sync pulse at the grid or cathode of one tube to trigger the oscillation.

N

NEGATIVE TRANSMISSION: This is the standard type of TV transmission in the United States. It results from "negative modulation" of the visual transmitter which means that an increase in light content of the picture results in a decrease in carrier amplitude.

NEMO: Program picked up away from the studio. A remote pickup.

NEUTRALIZATION: Means employed in RF amplifiers to prevent feedback from output to input through internal tube capacities.

NOISE: Term applied to unwanted disturbances in both video and audio signals. "Noise" in a picture results from tube noise, atmospherics, etc., resulting in salt-and-pepper effects or "snow."

NOODLE: Play a few bars of background music, usually for a title.

O

ODD-LINE INTERLACE: Term used to define the standard method of interlace. Since the total number of lines per frame (525 lines) is an odd number, each field contains one-half line.

OVERSHOOT: Magnitude of response to a change in input over and above that which would occur if the system responded with no distortion under a steady-state condition.

P

PAIRING: Failure of proper interlace. The lines of alternate fields do not fall precisely between the lines of the previous field, resulting in separated picture lines and loss of vertical resolution.

PANNING: Slowly sweeping the camera to one side or the other, or from side to side. May also include up and down movement.

PASSBAND: The band of frequencies freely transmitted without intentional attenuation.

PEAK POWER OUTPUT: The output power averaged over the carrier cycle at maximum black level. (See Average Power Output).

PEAKING COIL: An inductor of one to several hundred microhenries inductance, used in video amplifiers to compensate for high-frequency losses.

PEDESTAL: The level of the video signal at which blanking of the picture tube scanning beam is instigated.

PERCENTAGE MODULATION: Modulation factor in percent of peak (sync) value. In the aural transmitter, the percentage is in relation to 100% value occurring at ±25 kc. frequency swing.

PERSPECTIVE: Relative grouping of objects in comparative sizes as the eye perceives them in nature.

PICKUP HEAD: The camera lens, pickup tube, associated pre-amps, sweep circuits, etc., contained in the head. (Complete camera *without* viewfinder).

PICKUP TUBE: Camera tube such as Iconoscope or Image Orthicon.

PICTURE ELEMENT: Smallest picture element which can be defined by the scanning system. Cannot exceed the nominal line width.

PIX: Slanguage for picture.

PLATE EFFICIENCY: Ratio of load circuit AC power developed to the DC plate power input.

PLATE MODULATION: RF circuit in which the modulation signal is injected into the plate circuit of the tube.

POLARITY OF VIDEO SIGNAL: The direction of a potential change representing change to black relative to the direction of a potential change representing change to white. Polarity is given in terms of black, such as: "Black negative" or "black positive."

POLARIZATION: (See Antenna Polarization).

PRE-EMPHASIS: Employed in the FM aural transmitter before the audio input. The high-frequency end of the audio spectrum is boosted above the low-frequency end in accordance to a standard 75 microsecond pre-emphasis curve.

Q

"Q": Ratio of power dissipated to the power supplied. Numerically equal to the ratio of reactance to resistance. (X/R). Often termed the "figure of merit" of capacitors, inductors, and tuned circuits. "High Q" circuits provide maximum gain but minimum bandwidth. Therefore TV circuits require a compromise in circuit Q to obtain maximum gain *consistent with required bandwidth.*

QUASI-SINGLE SIDEBAND: (See Vestigial Sideband).

R

RADIO FIELD INTENSITY: Measured in millivolts or microvolts per meter. Measurement of the stress produced in the ether by the RF carrier wave equivalent to the voltage produced in a conductor one meter in length due to the magnetic flux of the wave sweeping across the conductor. For TV field strength measurements, the significant units are in DBU, designating field strength in decibels above one microvolt per meter. It has been determined that required DBU for Grade A and Grade B service of TV transmitters is as follows:

Chanels	*Grade A*	*Grade B*
VHF	68 DBU	47 DBU
UHF	74 DBU	64 DBU

The maximum radiated power permitted by the FCC is given in terms of decibels above one kilowatt (DBK), and are tabulated as follows:

Channels	*Effective Radiated Power (ERP)*
2-6	20 DBK (100 kw)
7-13	25 DBK (316 kw)
14-83	30 DBK (1000 kw)

RADIO FREQUENCY: (RF): Frequencies used in radio transmission.

RADIO RELAY: Point-to-point radio transmission, such as microwave setups between remote field telecasts and the main studio or transmitter.

RASTER: Scanned area illuminated by the modulated scanning beam in the picture tube. Also need not be modulated by the picture signal, but simply swept horizontally and vertically with normal scanning sweeps.

RTMA: Radio and Television Manufacturers Association. An association composed of committees from various manufacturers and associated members for purposes of technical advancement and self-standardization.

RC CIRCUIT: Resistance-capacitance coupled circuit.

"READY FILM" (OR READY CAMERA 1, 2, etc.): Director's cue to film or camera operator to be ready to go on the air.

REFERENCE BLACK LEVEL: That level corresponding to a specified maximum excursion of the signal component representing black. With proper *setup*, this instantaneous excursion in maximum black signal level is held about 10% under pedestal (blanking) level.

REFERENCE WHITE LEVEL: That level corresponding to a specified maximum excursion of the signal component representing white. This is held in practice to an amount never below 10% nor greater than 15% of the sync tip level in a composite signal.

RESOLUTION: A measurement of the smallest element (see Picture Element) of a picture which can be distinguished. (See Resolving Power).

RESOLVING POWER: Ability of the lens or the TV system to reproduce images of closely spaced lines which do not overlap or blend together.

RETURN TRACE (RETRACE): Return of the electron beam after horizontal or vertical scan to begin new line or field.

"ROLL FILM": Director's cue to film projector operator to start projector motor.

"ROTATE THE YOKE:" Instruction to cameraman to straighten up picture.

S

SAWTOOTH WAVE: Waveform employed in cathode ray oscilloscopes and television scanning which rises in amplitude linearily with time between two values, and with a quicker and linear return to the minimum value.

SCANNING: The process of analyzing, according to the predetermined method, the light values of picture elements constituting the total picture area.

SCANNING GENERATOR: Electronic circuit generating the sawtooth wave used for scanning.

SCANNING LINE: Single continuous narrow strip containing highlights, shadows and half-tones which are determined by the process of scanning.

SCANNING SPOT: Cross section of the electron beam used to scan the picture area. Also termed SCANNING APERTURE.

SCANNING YOKE: Assembly of one or more coils (such as horizontal and vertical deflection coils) whose cross-field deflects the electron beam.

SERIES PEAKING: Method of using a coil in series for high-frequency amplifier compensation. See PEAKING COIL.

SERVICE AREA: The service area resulting from an assigned effective radiated power (ERP) and antenna height above average terrain. (See RADIO FIELD INTENSITY).

SETUP: Difference of signal amplitude in maximum signal black to pedestal (blanking) level. This value should be adjusted so that maximum signal black is about 10% lower in amplitude than the pedestal.

SHUNT PEAKING: Method of using a shunt coil for high-frequency amplifier compensation. (See PEAKING COIL).

SINGLE SHOT: The director intends for the camera shot to include only one person.

SKY HOOK: The waveguide "hook" on microwave transmitter and receiver parabolic reflectors. In general, refers to entire assembly of parabola and exciter waveguide.

SNOW: Flecks on the monitor or receiver kinescope caused by weak signal, noisy amplifier, etc. Indicates high noise-signal ratio.

STABILIZING AMPLIFIER: Video amplifier containing corrective circuits to compensate for hum or stray noise pickup, poor sync, or generally bad or faulty signals. Usually used on incoming network or remote signals, at the studio output and at transmitter input.

STANDARD TELEVISION SIGNAL: Signal conforming to the Television Transmission Standards set up by RTMA and FCC.

STANDING WAVE RATIO (SWR): Ratio of the amplitude of a standing wave at an antinode to the amplitude at a node. A transmission line perfectly matched to the antenna and source generator has a theoretical standing wave ratio of 1:1. VOLTAGE STANDING WAVE RATIO (VSWR) indicates the nodes and antinodes are in terms of voltage.

SPURIOUS SIGNAL: Any undesired transient signal not related to, but showing in the picture.

SUPERIMPOSURE (SUPER): To televise two separate scenes and mix them so that one is "placed" over the other on the picture tube screen.

SWEEP: Term designating the deflecting potential action on the electron beam causing it to "sweep" back and forth and up and down on the area to be scanned.

SYNC: Abbreviation for synchronization. (See SYNCHRONIZATION).

SYNCHRONIZATION: (SYNC): The maintenance of one operation in step with another. In the TV system, the sync generator creates the horizontal and vertical sync pulses which cause the picture tube scanning beam to start at the same time as the studio scanning beam, and blank and retrace at the same time.

SYNC CLIPPER: Electronic tube biased so as to remove all or a portion of the sync signals from a composite signal.

SYNC COMPRESSION: Reduction in percent-of-sync resulting from any effect causing reduction of sync amplitude in ratio to the composite signal.

SYNC GENERATOR: The "master mind" unit at the studio which generates all the control pulses in accurate relative times, and shapes them into the standard RTMA and FCC signals.

SYNC LEVEL: Maximum level of the composite signal represented by sync pulse tips.

SYNC PULSES: The pulses generated, shaped and timed by the sync generator which keep the horizontal and vertical scanning at the monitors and receivers in step with those at the camera.

T

TANK CIRCUIT: Parallel resonant circuit used in the plate circuit of RF amplifier circuits.

TEARING: Horizontal disturbances on the picture caused by interference or improper adjustments of controls.

TELEGENIC: Term designating a person or object well suited to televising.

TELEPHOTO LENS: A lens system containing a converging group of lenses followed by a diverging group, used to bring close-ups of distant objects. The *Reflectar* (described in text) accomplishes this without the use of an actual lens system.

TELEVISION: Radio transmission and reception of moving visual images and accompanying sound.

TELEVISION BROADCAST BAND: Frequencies assigned to television broadcast stations. The VHF band extends from 44-88 mc for channels 2-6, and 174-216 mc for channels 7-13. The UHF band extends from 470-890 mc for channels 14-83.

TELEVISION BROADCAST CHANNEL: Band of frequencies 6 mc wide assigned to any particular station.

TELEVISION RELAY: (See RADIO RELAY).

TELEVISION TRANSMITTER: Radio transmitter or transmitters employed for transmission of both visual and aural signals.

TEST PATTERN: Chart placed before camera or contained in Monoscope camera, having geometric lines and patterns for purposes of studio, transmitter, monitor and receiver adjustments.

"TIGHTEN SHOT": Command given by director meaning he wants less space around the sides of the object or person. Cameraman accomplishes this by moving in slightly towards scene, or by changing the lens by rotating the turret to select a longer focal-length lens. Term TIGHTEN may also mean to speed up dialogue.

TILT SHOT: Camera tilted up or down for scenic effects.

TONGUE IN (Or Out): Command given by director to crane operator indicating he wants the camera boom to move in or out relative to scene being televised.

TONGUE RIGHT (Or Left): Command given by director to crane operator indicating he wants the camera boom to move right or left from its present position.

TRANSCRIBER KINESCOPE: Picture tube especially designed for recording of a TV program on film.

TRANSFER CHARACTERISTIC: Relation between the brightness of designated portions of a scene to the brightness of the same portions in the reproduced image, plotted on a logarithmic scale. RTMA defines the transfer characteristic as: "that function which, when multiplied by an input magnitude, will give a resulting output magnitude." In other words it is the function of the input magnitude which expresses the output magnitude.

TRAVEL SHOT: Following action by dollying with the camera. (As distinguished from following with a "pan" on stationary camera mount such as a fixed tripod).

TRIGGERING: The act of starting an action in a circuit by designated pulses, which the circuit then continues to function for a predetermined time under control of its own time constants.

TURRET: Plate at front of the TV camera containing up to 4 different lenses, rotatable from the rear of the pickup head.

TWO-SHOT: The director intends for the camera shot to include two persons.

U

UHF: Abbreviation for ultra-high frequencies. For television, the UHF band extends from 470-890 megacycles. (Channels 14-83).

UNIDIRECTIONAL MICROPHONE: Microphone sensitive to sound pickup from one side only.

V

VESTIGIAL SIDEBAND TRANSMISSION: System of transmission in which one of the generated sidebands is partially attenuated at the transmitter, and radiated only in part. In the standard TV vestigial sideband transmission system, all of the upper sideband is radiated while only a vestige (1.25 mc) of the lower sideband is radiated.

VHF: Abbreviation for very-high frequencies. For television, the VHF band extends from 44-88 megacycles for channels 2-6, and from 174-216 megacycles for channels 7-13.

VIDEO: "Sight."

VIDEO SIGNAL: Signal containing the picture information.

VIEWFINDER: Located atop the TV camera so that the operator sees the field covered by the lens system of the pickup head.

VISUAL TRANSMITTER: Transmitter concerned with radiating the carrier wave amplitude modulated with the picture information, sync and blanking pulses.

VOLTAGE STANDING WAVE RATIO (VSWR): (See STANDING WAVE RATIO).

VOLUME UNITS (VU): One volume unit is equivalent to one milliwatt of power (sine wave) in 600 ohms.

VU METER: Meter used on audio control boards at studio and transmitter to monitor sound level.

W

WEDGE: Fan shaped pattern of black and white lines converging to a minimum separation, contained on TV test patterns for purposes of judging the resolving power (picture resolution) of the system.

WHITE COMPRESSION: Compression occurring in the signal corresponding to white in the picture, modifying the tonal gradient.

WHITE PEAK LIMITER: Circuit employed at some stations to avoid over-

modulation of the transmitter in the white (minimum carrier) direction.

WOMP: Sudden flare of brightness. Opposite of "gobo."

WOOF: Term used to check audio levels. Also means "OK, goodby." Also refers "at this instant" when checking time signals, as: "It will be 9 o'clock in 5 seconds, 4, 3, 2, 1, — woof!"

X

X AXIS: Horizontal axis.

Y

Y AXIS: Vertical axis.

"YOU GOT FIRE": Equipment turned on, no more ad libbing.

Z

ZOOM: Act of rapidly approaching a televised subject or scene by physical or optical means.

ZOOMAR: Special camera lens manufactured by the Back Video Corp. of New York, which accomplishes zooming action optically by operation of a lever on the Zoomar Lens barrel.

Index

R

S

T

U

V

W

Y

Z