$3.25
MM70924

Electronics Today

June 1985

Canada's Magazine for Electronics & Computing Enthusiasts

Satellite Reception

Buy or build

Anti Phaser Project
Music effects

Electronics From The Start
Beginner's guide

Distortion Meter Project
Measuring quality

Computer Review
Commodore 16

Inside: Z80 Design Guide

...ns
...s one
...a list of
...CPU. For
...s (one ROM
...a PIO) no buf-
...the buffers would
...m the CPU than the

...s how to connect a buffer
...ns using a 74LS245 bidirec-
...er. The WR signal is connected
...on the 74LS245, controlling the
...ion of data flowing from the buffer.
...19 is connected to the BUSAK signal

0 57438 70924 06

The BEST MK II Super PC and XT Compatibility

Look what you get as standard!

- Uses 8088 microprocessor.
- New Feature, 256K RAM as standard.
- New Feature. Comes with the latest 41256 RAM chips.
- Expandable up to 512K and more on main board using 41256 RAM chips.
- New Feature. 7 expansion slots, each being identical for the user to upgrade as required.
- New Feature. Fitted with 150W power supply so system can be upgraded to a hard disk without changing power supply.
- New Feature. Flip-Top case.
- DMA controller. Three of the DMA channels are available to the user.
- New Feature. Even most basic versions come with Parallel and Serial Ports and Real Time Clock.
- Half watt speaker.
- Pre-socketed for optional coprocessors such as the 8087 math processor.
- Keyboard interface compatible with IBM compatible keyboards through a 5-pin DIN connector.
- Three ROM sockets are available to the user, one generally holding the Phoenix BIOS.
- New Feature. Reset switch.
- Timer/Counter used by the system for Real Time Clock, time base and for tone generation.
- Complete with the Phoenix BIOS, identical to that used by many of the large US companies manufacturing IBM compatible computers.
- Comes with two Slimline DS, DD 5¼" 360K Disk Drives.
- Colour Video (RGB and composite) and Disk Controller cards included.
- 230V models available.
- 300 Day warranty.

Tape Drive option backup suitable for all systems ..... $Call

IBM is registered trademark of IBM Canada Ltd.

The BEST Mark II

As described above using 41256 RAM chips. Two 360K DS, DD disk drives, RS232 and parallel port, Real Time Clock, 7 slots, Phoenix BIOS, Colour Video and Disk Controller Cards, Keyboard and much, much more

With 256K $1695 **With 512K $1795**

The BEST 10 Meg Hard Drive

As the BEST Mark II but with 10 Meg Hard drive (supplied with one Floppy Drive. For second drive add $200).

With 256K $2695 **With 512K $2795**

The BEST 20 Meg Hard Drive

As the BEST Mark II but with 20 Meg Hard drive (supplied with one Floppy Drive. For second drive add $200).

With 256K $2995 **With 512K $3095**

Also the Basic BEST $1595.00

As the BEST Mark II described above but without Parallel Port or Real Time Clock

The Best 256K PENTARAM BEST SELLER

$359.00 with 256K RAM, Real Time Clock Parallel, serial and Game Port (512K now available)

BEST 512K RAM BOARD

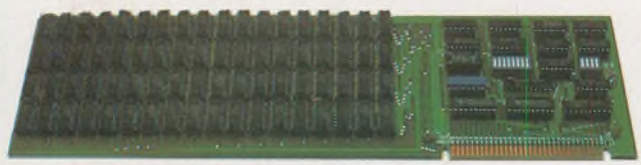

SPECIAL: $365.00! with 512K. With 64K **$179.00**

FLOPPY CONTROLLER BOARD AND OPTIONS

$129.00 With Real Time Clock and Serial Port only **$189.00**

EPROM Programmer **$99.00**
(with ZIF Socket Adapter **$159.00**)
Parallel/Game Port **$79.00** (cables Extra)

Colour Graphics Video Board

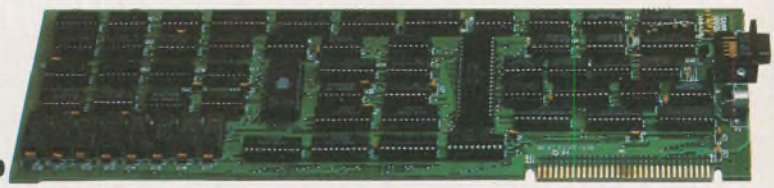

$179.00 (Composite and RGB Output)

Quantity, Students and Teacher discount's available.

CHARGEX master charge

Exceltronix Computer Division Computers at unbeatable prices! (416) 921-8941, 319 College St., Toronto, Ontario M5T 1S2

EXCELTRONIX

No returns or exchanges after 7 days. 15% restocking charge.
Prices may change without notification
217 Bank Street, Ottawa (613) 230-9000

1-800-268-3798 — Order line only

EXCELTRONIX

Long Distance Order line only: 1-800-268-3798

319 College Street, Toronto, Ont, M5T 1S2 (416) 921-8941
217 Bank Street, Ottawa, (613) 230-9000
We guarantee you the combination of BEST Prices & Service in Canada!

Star Micronics Gemini 10X 1 year warranty

• 120 c.p.s., • 816 characters print buffer, option 4K or 8K • standard parallel optional RS232C • tractor & friction feed. **Super Special $299.00**
(Time limited offer)

Gemini 15X **$599.00**
Same as Gemini 10X. • 15.5" carriage

New from Star Micronics SG-10 Printer

Ideal for Text & Graphics
(Similar appearance to Gemini 10X/15X)

• Dual Mode - NLQ/draft standard (NLQ = near letter quality) • 120 CPS and 20% faster throughput • Bidirectional logic/seeking • 2K buffer (expandable to 6K with optional buffer interface) • 100% IBM PC or Star standard control codes-switch selected • Friction and tractor standard • full 1 year warranty • 10" wide carriage • Standard parallel interface (serial optional) $399.00

SG-15 same as SG-10
Except with 15" carriage and standard 16K buffer $599.00

Radix — $995.00 SR-15 $995.00

POWER TYPE LETTER QUALITY $639.00
• 18 CPS bidirectional logic seeking.
• 96 Petal Wheel

IBM COMPATIBLE KEYBOARDS
Cherry... **Super Special** ..... $ 99.00
Maxiswitch $135.00

Super Special
Keytronics Programmable Keyboard (no case) $69.00

IBM Compatible Disk Drive SA455

(with warranty) **$179**

CASES FOR YOUR IBM Compatibles

• Hinged top cases allowing easy access by opening top half of the case. Can be supplied with plain back or for 5 or 8 slots. Please specify when ordering. $74.95
• Above case with power supply and fan
For Apple compatible 75 Watt $169.00
For IBM compatible 150 Watt $219.00
Hinged Case with 90W (max.) Power Supply with fan $178.00
As above with 175W (max.) Power Supply and fan $228.00

APPLE COMPATIBLE DISK DRIVES

Now also available for Apple IIc

Famous Multiflex Disk Drive

$199.00 1 year full warranty

Features:
• Apple compatible • Attractively packaged • Professionally built and tested • Canadian Made. We believe that Multiflex put out more drives in the last year than all other Canadian manufacturers combined.

Monitors

Zenith Data Systems

BEST SELLER ZVM 122A • 12" diagonal screen • non-glare amber display • composite input • 25 lines x 40/80 characters **$139.00**

BEST SELLER ZVM 123A • 12" diagonal screen • non-glare green display • composite input • 25 lines x 40/80 characters **$129.00**

ZVM 133 • 13" diagonal screen • RGB input • 25 lines x 80 characters • 640 x 240 pixels green screen only switch • 16 colours including PC brown **$799.00**

Spectacular Pricing on Apple Products — Call for best price

Peripherals for your Apple

Z80	$ 45.00
80 x 24 Video Card with Soft Switch	$ 69.00
16K RAM Card	$ 49.00
128K RAM Card	$129.00
Parallel Card with Cable	$ 65.00
Serial Card	$ 69.00
Apple Programmer	$ 65.00

BEST IBM Compatible Modem

• Plugs into motherboard
• Excellent Hayes compatibility
• Auto Dial, Auto Answer, Direct-connect

300 Baud **$179** 300/1200 Baud **$379**

300 BAUD MODEM for your APPLE $79.00

Auto Answer, Dial, Direct, Con. Plugs right into your Apple, comes with software.

Multiflex 300 Baud Modem

For your Apple (Super compatibility) $159.00

Hard Disk Drives

Seagate (industry favoured)
10 MEG. slimline $889.00
10 MEG Seagate, slimline drive and hard disk controller. This controller can handle up to two 10 MEG hard drives. **LOWEST PRICE OF $1099.00**

Quantity Discounts Available
Seagate 20 MEG. slimline $1099.00
Seg 20 MEG. with controller $1395.00
Controller alone (for 10 or 20 MEG) $349.00
Cables (for 10 or 20 MEG) $38.00

MEMORY Untouchable Prices!

Guaranteed Prime Stock

Dynamic RAMs

4116 1x16k (150ns)	$ 0.99
4164 1x64k (150ns)	$ 2.99
4164's (150ns) Set of 9	$26.70
41256 1x256k (150ns)	$12.99
41256 (150ns) Set of 9	$99.95

Static RAM

2114L 4x1k 200ns	$ 2.25
6514 4x1k CMOS 450ns	$ 4.99
6116 8x2k 150ns	$ 6.95
2016 8x2k 150ns	$ 6.00
6164 8x8k 150ns	$35.00

EPROMS

2716 450ns 8x2k	$ 6.19
2716 300ns 8x2k	$ 7.45
2732 450ns 8x4k	$ 5.95
2732 250ns 8x4k	$ 5.95
2764 300ns 8x8k	$ 6.95
27128 350ns 8x16k	$13.95

Special Parts for your IBM & Apple Compatibles

Intel Parts

8087	$219.00
8088	$14.95
8237A-5	$14.95
8250	$11.50
8253A-5	$ 7.45
8255A-5	$ 6.90
8259A	$ 6.95
8284A	$ 7.75
8288	$14.95
NEC765/8272 Equiv.	$14.95
74LS322	$ 6.95
62 Pin Card Edge Connectors	$ 2.19
5 Pin Din Connector	$ 1.20
100ns Delay Line	$ 6.00
6502 CPU	$ 5.45
Z80A CPU	$ 4.99
68A45 CRT cont.	$ 9.75
TMS99532 FSK Modem	$18.95
Set of 8088, 8255A-5, 8237A-5, 8288, 8284, 8253A-5, 8259A	$64.00

SURPLUSTRONICS

we will not be undersold

8088 Computer

The Price Barrier Smashed!

$995

Includes:
- 8088 motherboard with 256K and all parts (except 8087)
- Phoenix Bios
- One 360K DS, DD disk drive and controller
- Power Supply with fan
- Flip-top case

All you need extra is a keyboard, video board and monitor.

8088 Motherboard only with 64K, fully assembled and tested, no Bios (one blank 2764). Expandable to 1Meg on-board memory. Flow soldered. Provision for 8087 ..... **$299.00**

6502 Systems

The Famous 6502 Board

- Assembled and fully tested (flow soldered)
- 64K, 80 x 24 video with soft-switch, floppy controller.
- System comes with blank EPROM'S on board, does not come with any proprietary software or Basic . . . **$289.00**

Complete System

- 6502 board (as bove) as illustrated with case, keyboard and power supply **$499.00**

Complete System

- Using 6502 board above in IBM style flip-top case, using powerful 75 watt power supply with fan, programmable serial keyboard adaptor, IBM style keyboard **$599.00**

As above with one built in disk drive **$789.00**
As above with two drives **$969.00**
Switching Power Supplies. +5V 5A, +12V 2.8A, +12V 2.0 Amps −12V 0.5A (open frame) **$44.95**
Panasonic Printers (open frame) **$39.95**

PERIPHERAL CARDS FOR YOUR IBM AND COMPATIBLE COMPUTER

Colour Video Board **$159.00**
Composite video or RGB Video

Floppy Controller **$119.00**

Floppy Controller with RS232 .. **$149.00**

Floppy Controller w. clock/RS232 **$159.00**

Parallel and Game Port Card ... **$59.00**
Cable and connector extra.

Peripheral Interface Card **$139.00**
Includes two serial ports, parallel port, game port and provision for (but not including) real time clock.

Clock/Calendar Option **$29.00**
With battery backup.

256K Multifunction Board
Includes: Serial port, parallel port, game port, provision for optional real time clock/calendar and socketed for up to 256K RAM.

With 64K RAM **$175.00**

512K Board. Socketed for 512K including:
64K RAM **$169.00**

IBM Compatible Disk Drives ... **$185.00**
Brand New, fresh from factory. Shugart SA455 40 track, double sided, double density Slimline. We have ordered 10,000 from Shugart - that is why we can pass the savings on to you.

IBM Compatible Keyboards

Keytronics programmable (no case) ..... **$ 64.00**
Maxiswitch **$129.00**
Cherry **$129.00**

Case - High Quality
Hinged for easy access, can be supplied with plain back or for 5 or 8 slots. Please specify **$74.95**

Above case with power supply and fan.
For Apple compatible (75W) **$169.00**
For IBM compatible (150W) **$219.00**

PERIPHERAL CARDS FOR YOUR APPLE & COMPATIBLE
Assembled, flow-soldered/cleaned and 100% tested

16K RAM Card **$49.95**
80x24 video card **$69.95**
Z80A Card **$47.00**
Parallel Printer Card (cables extra) **$49.95**
128K RAM Card with 64K **$99.00**
128K RAM Card with 128K **$139.00**
EPROM Programmer with Software **$63.00**
(programs 2716, 2732, 2732A, 2764)
8" Floppy Controller **$79.00**
Modem Autoanswer/autodial, touch tone or pulse dial. Plugs right into the system ..... **$69.00.**
Apple Compatible Disk Drives (SA390) **$189.00**
Case with numeric keyboard **$129.00**
Power Supply (Hydro Approved) **$69.00**

IBM is a registered Trade Mark of IBM Canada Limited Apple is a registered Trade Mark of Apple Canada Limited

Mail Orders add $5.00 minimum for shipping & handling. Ontario residents add 7% P.S.T. Visa, Mastercard and American Express cards accepted: send card number, expiry date, name of bank and signature. Send certified cheque or money order, do not send cash. All prices on this page are final sale. No warranty, No returns, No refunds but HUGE savings. Warranties available at extra cost.

Surplustronics, 310 College Street, Toronto, Ontario, M5T 1S3

More lines to serve you better
(416) 960-1350

Our Cover

Satellite-to-home TV reception has started a growing industry; a guide appears on page 32. Equipment courtesy of Vexus Telecommunications, Mississauga; photo by Bill Markwick.

Audit Bureau of Circulations

Electronics Today is Published by:
Moorshead Publications Ltd.(12 times a year)
Suite 601, 25 Overlea Blvd.
Toronto, Ont. M4H 1B1
(416) 423-3262

Editor:	**William Markwick**
Editorial Assistant:	**Edward Zapletal**
Director of Production:	**Erik Blomkwist**
Creative Manager:	**Ann Rodrigues**
Production:	**Douglas Goddard**
	Naznin Sunderji
	Sandra Hemburrow
Circulation Manager:	**Lisa Salvatori**
Advertising Director:	**Kenneth Marskell**
Advertising (Que.)	**John McGown & Associates**
	(514) 735-5191
Advertising (B.C.)	**(604) 688-5914**

Publisher: H.W. Moorshead; **Executive Vice-President:** V.K. Marskell; **General Manager:** S. Harrison; **Controller:** B. Shankman; **Accounts:** P. Dunphy; **Reader Services:** R. Cree, H. Brooks, M. Greenan; **Advertising Services:** A. LeBrocq.

Newsstand Distribution:
Master Media, Oakville, Ontario

subscriptions:
$19.95 (one year), $34.95 (two years). For US add $3.00 per year, other countries add $5.00 per year. Please specify if subscription is new or a renewal.

Postal Information:
Second Class Mail Registration No. 3955. Mailing address for subscription orders, undeliverable copies and change of address notice is:
Electronics Today, Suite 601, 25 Overlea Blvd., Toronto, Ontario, M4H 1B1

Printed by Heritage Press Ltd., Mississauga
ISSN 07038984.

Moorshead Publications also publishes Computing Now!, Computers in Education, and Software Now!.

Advertisers' Index

Active Components Sales Corp. 37
A-1 Electronics 60
BCS Electronics Ltd. 28, 58
Computer Parts Galore 62, 63
Dacor Ltd. 59
Daetron 57
Duncan Instruments Ltd. 35
Electronic Control Systems 57
Exceltronix 2, 3
Information Unlimited 31
K.B. Electronics 27
Kaientai Electronics Merchants Ltd. ..8
Varah's Direct 7
McGraw Hill 25
Software Link 64
Soltech Industries Inc. 40
Sunix Inc. 8
Surplustronics 4

Electronics Today

June 1985

Vol. 9 No.6

Canada's Magazine for Electronics & Computing Enthusiasts

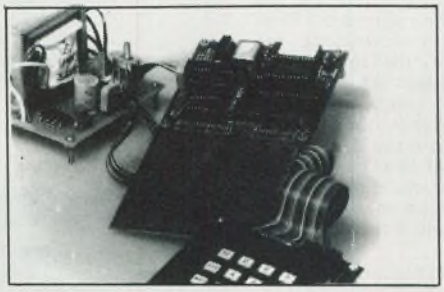

MTHS-80 Interface, p. 26

Supercomputers, p. 29

Features

Supercomputers 29
Satellite Reception 32

Reviews

MTHS-80 Interface 26
Commodore 16 Computer 36

Projects

Distortion Meter 13
Timed Nicad Charger 22
Anti Phaser 55

Series

Electronics From The Start 9
Configurations: Optoelectronics 16
Computing Today: Z80 Design 39
Designer's Notebook: Power Amps 42

Columns, News, and Information

For Your Information 6
Next Month 18
Computing Now! This Month 19
Software Now! This Month 19
Bookshelf 20
Order Form 51
Subscriptions 52
Product Mart 54
Circuit Ideas 59

Copyright
All material is subject to worldwide copyright protection. All PCB patterns are copyright and no company can sell boards to our design without our permission.

Liability
While every effort has been made to ensure that all constructional projects referred to in this magazine will operate as indicated efficiently and properly and that all necessary components are available, no responsibility whatsoever is accepted in respect of the failure for any reason at all of the project to operate efficiently or at all whether due to any fault in the design or otherwise and no responsibility is accepted for the failure to obtain component parts in respect of any such project. Further no responsibility is accepted in respect of any injury or damage caused by any fault in design of any such project as aforesaid.

Editorial Queries
Written queries can only be answered when accompanied by a self-addressed, stamped envelope. These must relate to recent articles and not involve the staff in any research. Mark such letter Electronics TodayQuery. ***We cannot answer telephone queries.***

Binders
Binders made especially for Electronics Today (ETI) are available for $9.25 including postage and handling. Ontario residents please add provincial sales tax.

Back Issues and Photocopies
Previous issues of Electronics Today Canada are available direct from our office for $4.00 each; please specify by month, not by feature you require. See order card for issue available.

We can supply photocopies of any article published in Electronics Today Canada; the charge is $2.00 per article, regardless of length. Please specify both issue and article.

Component Notation and Units
We normally specify components using an international standard. Many readers will be unfamiliar with this but it's simple, less likely to lead to error and will be widely used everywhere sooner or later. Electronics Today has opted for sooner!
Firstly decimal points are dropped and substituted with the multiplier: thus 4.7uF is written 4u7. Capacitors also use the multiplier nano (one nanofarad is 1000pF). Thus 0.1 uF is 100nF, 5600pF is 5n6. Other examples are 5.6pF = 5p6 and 0.5pF = 0p5.
Resistors are treated similarly: 1.8Mohms is 1M8, 56kohms is the same, 4.7kohms is 4k7, 100ohms is 100R and 5.60hms is 5R6.

PCB Suppliers
Electronics Today magazine does NOT supply PCBs or kits but we do issue manufacturing permits for companies to manufacture boards and kits to our designs, Contact the following companies when ordering boards.

Please note we do not keep track of what is available from who so please don't contact us for information on PCBs and kits. Similary do not ask PCB suppliers for help with projects.

K.S.K. Associates, P.O. Box 266, Milton, Ont. L9T 4N9.

Wentworth Electronics, R.R. No. 1 Waterdown, Ont. L0R 2H0.

Danocinths Inc., P.O. Box 261, Westland MI 48185, USA.

Arkon Electronics Ltd., 409 Queen Street W., Toronto, Ont., M5V 2A5.

Beyer & Martin Electronic Ltd., 2 Jodi Ave., Unit C, Downsview, Ontario M3N 1H1.

Spectrum Electronics, 14 Knightswood Crescent, Brantford, Ontario N3R 7E6.

Intelligent Programmable LEDs

Siemens Electric of Mississauga Ontario recently revealed a new intelligent programmable LED display capable of such functions as underlining and adjustable display intensity.

Now the intensity of the red emission can be reduced by 50 to 75% so as to downgrade the significance of the information displayed or adapt the brightness to the ambient conditions. When the display flashes, the memory contents remain intact. In contrast to conventional displays with an external flasher, the characters only need to be input once and not in the rhythm at which the LEDs light up.

The PD 2816 is comprised of a character generator (ROM), multiplexer, timer logic and driver logic, and also the CMOS circuit for the supplementary programmable functions. The LEDs are configured in eight 18-segment units only 4.1mm high. Any number of eight-element displays can be cascaded to form long lines of text.

For more information contact: Siemens Electric Ltd., 1180 Courtney Park Dr., Mississauuga Ont., L5T 1P2.

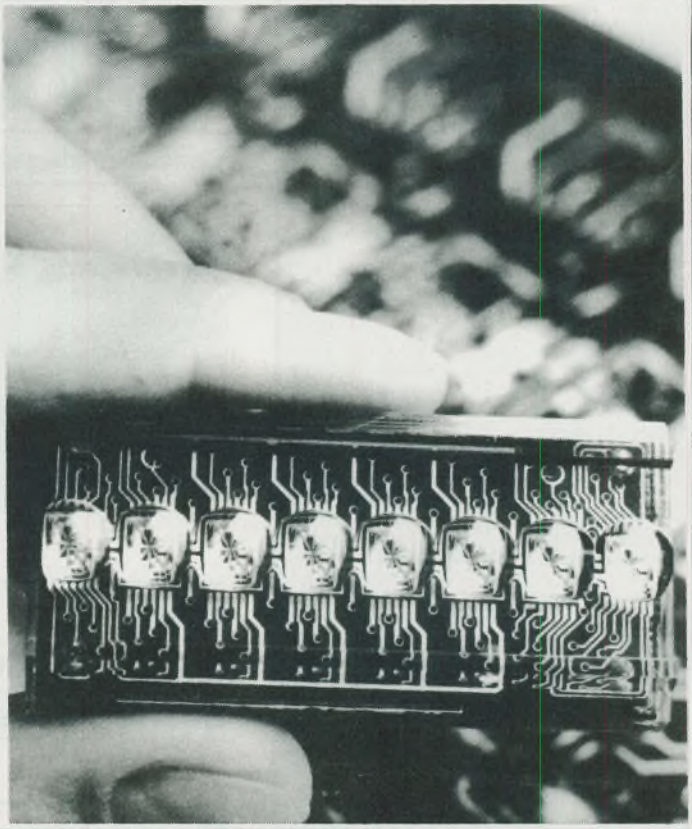

Cellular Service Areas Announced

Cantel, the company selected by the D.O.T. to provide cellular phone service to 23 Canadian markets, recently announced two areas of initial service.

Commencing July 1st, continuous coverage will begin in and between Toronto, Hamilton, Dundas, Burlington, Oakville, Mississauga, Georgetown, Brampton, Etobicoke, Bramalea, Bolton, Scarborough, Richmond Hill, Markham, Newmarket, Aurora, Pickering, Whitby, Ajax, and Oshawa.

Also commencing on July 1st, the Montreal area service will include: Montreal, L'Assomption, Vercheres, St. Hyacinthe, Chambly, La Prairie, St. Jean, Beauharnois, Laval, Hudson, Ste. Therese, Terrebonne, St. Jerome and Ste. Adele.

If you would like more detailed information on cellular phone service contact: Cantel Inc., 20 Queen St. W., Suite 1204, P.O. Box 70, Toronto Ont., M5H 3R3.

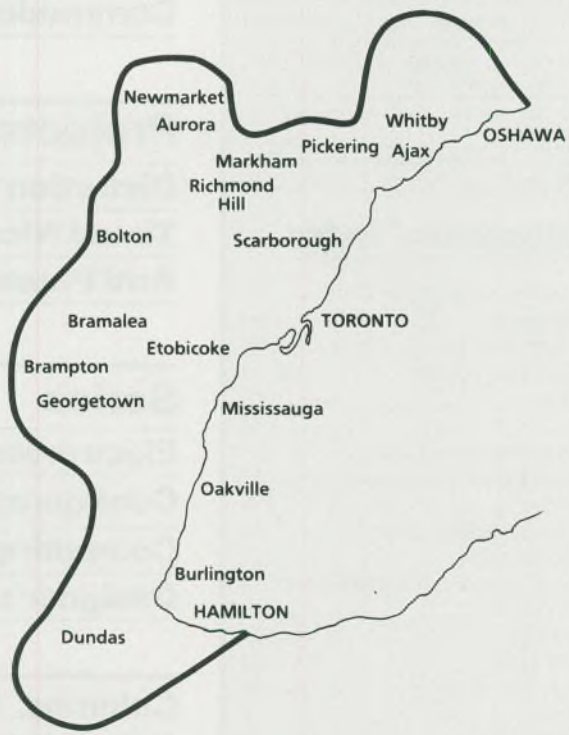

The popular ILP power amplifier modules are now available in standard 19 inch racks for professional use. They're available in bipolar or MOSFET versions, and feature fast slew rate, low noise and low distortion. Various power levels are available up to 180 watts per channel. They're from EDG Electronic Distributors, 3950 Chesswood Dr., Downsview, Ont. M3J 2W6 (416) 636-9404.

Flat Bed Recorder

No, this won't check for saggy springs in your mattress, but it will plot XY or y/t charts quite nicely.

The new PL 4 from J.J. Lloyd is portable and is driven by a fully integrated quartz-controlled chart drive. Both inputs are fully floating and have a constant input impedance of greater than 1Mohm, as well each amplifier is fitted with an 18-range attenuator provideng a maximum sensitivity of 25uV/mm.

The electonically controlled drive unit has 9 speeds from 2mm/min to 20mm/min with an accuracy of greater than 0.01%. Linearity and repeatability are both better than 0.1% and the calibration accuracy is greater than 0.2%.

For more information on the PL 4 chart recorder please write to: Omnitronix Ltd., 2410 Dunwin Dr., # 4, Mississauga Ont., L5L 1J9.

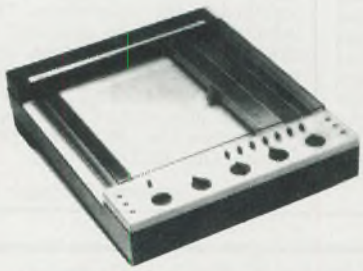

New 100 MHz Scope

The LEADER LBO 516 provides a 5mV/div to 100MHz and a 500uV/div sensitivity to 5 MHz. The newly developed 6 inch rectangular CRT having an acceleration potential of 20kV provides a crisp display and an internal graticule is also incorporated to provide parallex free measurements. Alternate sweep on main and delayed time base, a 2nS/div sweep speed and trigger view make this an ideal scope for service/maintainence, research and development and teaching. A channel 1 out feature is also provided for fast and accurate frequency measurements. The front panel is ergonomically designed and the unit is light and compact. For more information please write: OMNITRONIX LTD., 2410 Dunwin Dr., #4, Mississauga, Ontario L5L 1J9 (416) 828-6221.

varah's direct™

416-842-8833 416-842-8833 416-842-8833

FINALLY !

*A complete range of electronic components **DIRECT** from Varah's and leading manufacturers. Absolutely no surplus, no rejects, no old date codes, and all at **DIRECT** from the distributor prices!*

7400 Stk #		Qty	Price
14000	7400	4	1.95
14004	7404	4	2.25
14006	7406	4	3.00
14007	7407	4	3.00
14010	7410	4	2.20
14012	7414	4	3.00
14014	7416	4	3.00
14015	7417	4	3.00
14022	7427	4	2.20
14026	7438	4	3.00
14035	7450	4	2.20
14042	7474	4	3.00
14062	74123	4	3.00
14082	74161	2	2.25
14110	74365	4	4.15
14112	74367	4	4.15

HCMOS Stk #		Qty	Price
15000	74HC00	4	2.25
15002	74HC02	4	2.40
15004	74HC04	4	2.40
15014	74HC27	4	2.40
15018	74HC32	4	2.40
15025	74HC74	4	3.40
15028	74HC86	4	3.20
15042	74HC138	2	2.60
15055	74HC161	2	3.05
15066	74HC193	1	2.55
15072	74HC240	1	4.25
15074	74HC244	1	2.40
15075	74HC245	1	3.60
15098	74HC373	2	4.40
15099	74HC374	2	4.40
15104	74HC393	2	3.25

LS Stk #		Qty	Price
14200	74LS00	4	1.75
14202	74LS02	4	1.75
14204	74LS04	4	1.85
14206	74LS08	4	1.85
14208	74LS10	4	1.85
14220	74LS32	4	1.85
14235	74LS74	4	1.95
14241	74LS86	4	2.25
14260	74LS138	4	3.00
14261	74LS139	4	3.00
14284	74LS174	4	3.50
14285	74LS175	4	3.50
14300	74LS240	2	2.95
14304	74LS244	2	2.95
14305	74LS245	1	2.30
14340	74LS373	1	1.80

LINEAR Stk #		Qty	Price
16010	555	5	2.50
16297	XRL555	5	2.50
16015	556	2	1.75
16160	339	2	1.35
16130	324	2	1.35
16115	741CP	5	2.50
16210	4558	4	2.75
16234	TL082	2	1.95
16090	1488	2	1.50
16092	1489	2	1.50
16300	7805CT	2	1.95
16310	7905CT	2	2.15
16306	7812CT	2	1.95
16314	7912CT	2	2.15
16308	7815CT	2	1.95
16318	7915CT	2	2.15

3/4.5/6/7.5/9/12VDC selectable power supply
63200 $7.95

PC board holder
67105 $9.95

*All of our semiconductors are protected with Varah's Direct exclusive **static-free**™ package and guaranteed perfect.*

opto resistors ferrites
s scopes instrumentation
ard crystals data books
onnectors I/O modules
heatsinks transformers
bridges zeners SCR's
ignals sockets cores
rack & panel BNC
eters tools testers
ire & cable knobs
able ties chemicals
s bulbs batteries
gs and jacks
ocessors
works
ntrols
mic
ters

Electrolytic capacitors

31410	100uF 16V radial	20/2.20
31420	1000uF 16V radial	5/2.20
31480	10uF 35V radial	20/1.95
31540	4.7uF 63V radial	20/2.20
31545	10uF 63V radial	20/2.40
31580	1uF 100V radial	20/2.20
31610	10uF 16V axial	20/3.50
31625	470uF 16V axial	5/2.10
31675	10uF 35V axial	20/3.70
31720	1uF 63V axial	20/3.50

Mini-toggle switches

44047	SPDT on-off-on	1.95
44049	DPDT on-off-on	2.95
44046	SPDT on-none-on	1.95
44048	DPDT on-none-on	2.95

PC mount slide switch

44115	DPDT	6/1.95
44120	DPDT rt. angle	5/1.95

crimping tool
43440 $7.95

Cable assemblies

72500	6' M-M IBM compatible	42.90
72510	8'M-M RS232 serial 1-1	41.80
72520	8' M-F RS232 serial 1-1	41.80
72540	8'M-M modem 1-8+20,22	35.20
72560	8' M-M null modem	35.20

page 96

TAKE A PAGE FROM OUR BOOK

The DIRECT Catalog

Our detailed catalog with full specs on over 2000 electronic components will be available soon. Reserve your free copy by circling the reader service number below, or by dialing (416) 842-8833 between 8:30 - 5:00 Monday-Friday.

The DIRECT Guarantee

We back our products 100%. If you are not completely satisfied with an item, return it for a full and prompt refund.

Integrity

Member Canadian Direct Marketing Association

Order now! All parts shipped from stock within 24 hours of receipt of payment and fully guaranteed. Orders under $100 please add $3.00 shipping and handling (+ $1.00 insurance if desired). Ont. residents add 7% PST. Mastercard, Visa (incl. card no., cardholders name & expiry date), cheque, money order welcome.

Mail Orders & Oakville Store:
Varah's Direct Mail Order
504 Iroquois Shore Rd.
Oakville, Ont., L6H 3K4, 842-8833

Store Only
Ottawa(Nepean)
35 Stafford Rd
(613) 726-8884

Plus locations in:
Vancouver
Edmonton
Calgary Winnipeg

Signal Generator

Tritron S.A. of Norway has appointed KB Electronics of Oakville exclusive importers for their line of generators, counters, and modulation meters. The SD-1003 RF generator shown covers the range of 8 to 512MHz; AM is 0-90 percent and FM is in 10-30-100KHz steps. The output attenuator is in 10dB steps with a vernier fine control. It is available from KB for 30 to 40 percent below "industry standard" prices. Contact KB Electronics, 355 Iroquois Road, Oakville, Ontario L6H 1M3 (416) 842-6888.

Portable Terminal

The iXO handheld terminal allows the user to communicate with databases such as Compuserve or remote with office via regular telephone lines. It features automatic dialing, a 16 character display, a full typewriter style keyboard, and a versatile editing function with a 1300 character memory that allows composing and correcting a message before transmitting. A built-in modem lets the user connect to modular phonejacks.. For further information, contact TAS, 10 Kodiak Crescent, Suite 100, Downsview, Ontario M3J 3G5 (416) 6330-1175.

According to a recent press release, IBM scientists in New York have made the world's densest integrated circuits. We said that last month, too, but this is new stuff. This month's breakthrough uses half-micron line widths, about one-fourth the width of production chips. Two type of experimental chips were made: one was a logic circuit with 1700 transistors in one-tenth of a square millimeter, and the other was a memory array using the world's smallest one-transistor memory cell, 8.5 square microns. Unfortunately, a scientist sneezed and the chips haven't been seen since.

Apple Logic Analyzer

The AP512 is a dedicated self-contained logic analyzer for the Apple II, IIe or compatible. The unit monitors the machine level operations of the Apple during program execution and stores a trace of 512 cycles around a trigger point specified in the setup menu. The information can be analyzed in either Hex or disassembled formats. Programmers can debug RAM or ROM based assembly language programs. Contact Aptron Design Ltd., PO Box 13193, Kanata, Ont. (613) 831-0163.

continued on page 12

K.E.M. COMPUTER AND ELECTRONICS

KEM CUSTOM PC BOARD

HOW TO DROW YOUR ARTWORK

1) Using black ink, tapes, letterings, draw your artwork on white paper or clear drawing film, taking care to letter clearly. Put the dimensions on the artwork in at least two places as shown in Fig.1.
2) Your artwork can be drawn either actual size or double size.
3) Write down the diameter of holes on a second copy of the artwork.
4) We can make a film from your magazine, send your original issue.

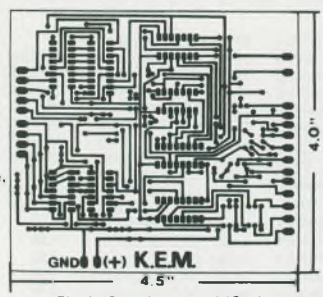

Fig.1 Sample artwork(Solder side)

ESTIMATE

PHOTO FINISHING
$10.00/1shot (max. 4.5" x 6.5")
$13.00/1shot (max. 7.5" x 9.5")

PCB MAKE
Single sided — 65¢/sq. inch x PCB size(max 20 sq. inch) or min charge $6.00
50¢/sq. inch x PCB size(for over 20 sq. inch)
Double sided (no plated through) — 95¢/sq. inch (for max 20 sq. inch) or min charge $10.00
75¢/sq. inch (for over 20 sq. inch)

DRILLING ---------- 3¢/each hole (No charge if not ordered)
DIP-TIN PLATING ---- $2.00/each board (No charge if not ordered)

(Available for Nikel plating or Solder coating.)

SAMPLE ESTIMATE FOR FIG. 1
1) Photo ------- $10.00
2) PCB ---------- 11.70 (65¢ x 18 sq. inch)
3) Drilling ------ 8.49 (283 holes)
4) Tin plating -- 2.00

Plus $3.00 for shipping charge.
Plus provincial sales tax.
Please send CHEQUE or MONEY ORDER.
COD mail order can NOT be accepted for photo finishing & PCB order.

KAIENTAI ELECTRONICS MERCHANTS LTD

MAIL TO: P.O. BOX 69126 STATION 'K'
VANCOUVER, B.C., CANADA V5K4W4

PHONE: (604) 435-9697

ATTENTION! Hobbyist, Technician, Enginner: Compare Quality, Spec. & Price Before Buying Your Logic Probe!

The MF504/MF505 Logic Probe is designed for quick servicing and checking of integrated logic systems. With its unique multi-lamp readouts, the logic probe visually displays the presence of correct logic levels by illumination of colored readouts. Incorrect logic levels are shown by the absence of colored readouts.

LOGIC PROBE	MF504	MF505
• Input Impedance:	3 Megohms	1 Megohms
• Minimum Detectable Pulse Width:	20ns	5ns
• Max. Input Frequency Displayed:	30MHz	100MHz
PRICE	$32.50	$37.50

LOGIC PULSER MF512 $38.50

- Pulse Repetition Rate: 0.5pps/400 pps.
- Pulser: Normally high impedance (1 Meg ohms) output.
- Pulse Width in Pulser Mode: 10*us* typical
- Signal Delay from EXT SYNC to Output: 1.5*us* typical.
- Power Supply (Vcc): DC 5V 15V, 15mA 60mA

MAIL ORDER: Cheque, Money Order, VISA, Master Card plus $2.00 min. For Shipping & Handling. Ontario Residents add 7% P.S.T.

Dealer and Institution Discount Price Available

SUNIX INC.

578 Marlee Ave., Toronto, Ont. Canada
M6B 3J5, Tel: (416) 781-3263
In U.S.A.: (214) 985-1842
TELEX: 06-217736 SUNIX TOR.

Circle No. 29 on Reader Service Card

Circle No. 30 on Reader Service Card

Electronics From The Start

A new series for the complete beginner. This month we look at the basic theories and tools of the trade.

By Keith Brindley

INTRODUCING THE START of our brand new series on electronics; month-by-month we take you through all the major principles and concepts you need to know, in a fascinating and practical way. You'll find out about electronic components: what they are; what they do; how they're made and why this affects their operation. You'll see the laws and principles which govern electronic circuits, right before your own eyes — not in a boring old text-book manner, but in a novel and interesting way, helping you to remember the things you need to know. You'll be able to build some of the circuits we show you, too. We'll give you instructions and details of how to do-it-yourself, so you'll have a permanent reminder of what you learn.

Tools of the Trade

The first tool you need is a pair of **cutters**. There are many types but the most useful sorts are side cutters. Generally speaking, buy a small pair — the larger ones are OK for cutting thick wires but not for much else. In electronics most wires you want to cut are thin, so the smaller the cutters, the better.

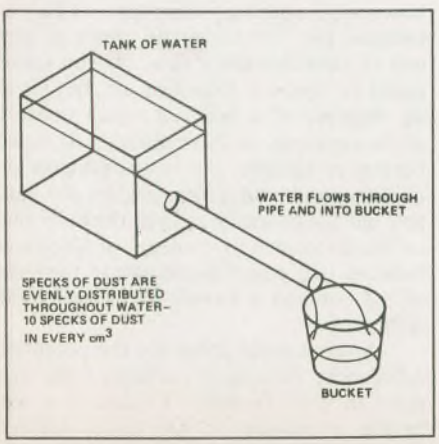

Fig. 1. Water flowing in a pipe is like electricity in a wire.

You can expect to pay from $5 to $25 for a good quality pair, so look around and decide how much you want to spend. If you buy a small pair (as we recommend) don't use them for cutting thick wires, or you'll find they don't last very long, and you'll have wasted your money.

You can use side cutters for stripping the insulation from wires, too, if you're careful. But if you feel rich, a proper **wire stripping tool** makes the job much easier. There are many different types of wire strippers ranging in price from $3 to $40. Of course, if you don't mind paying large dentist's bills you can always use your teeth — but don't say we said so.

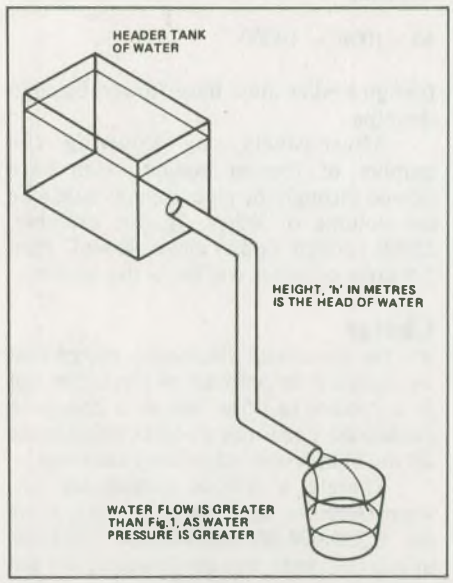

Fig. 2. A header tank's potential energy forces the water with a higher pressure.

A small pair of **pliers** is useful for lightly gripping components etc. Flat-nosed or, better still snipe nosed varieties are preferable, costing between $5 to $25. Like side cutters, however, these are not meant for heavy-duty engineering work.

The last essential tool we're going to look at now, is a **soldering iron**. Soldering is the process used to connect electronic components together, in a good permanent joint. We'll look at how to solder in a future article, so don't worry about it now. Soldering irons range in price from $5 to $30, but the price doesn't necessarily reflect how useful they are in electronics. This is because irons used in electronics generally should be of a low power rating. Power rating will be specified on the iron or its packaging and a useful iron will be around 25 watts.

It is possible to get soldering irons rated up to and over 100 watts, but these are of no use to you — stick with an iron with a power rating of no more than 25 watts.

Ideas About Electricity

Electricity is a funny thing. Even though we know how to use it, how to make it work for us, to amplify, to switch, to control, to create light or heat (you'll find out about all of these aspects of electricity over the coming months of this series) we can still only guess at what it is. It is actually impossible to see electricity: we only see what it does!

The truth of the matter is that we may only hypothesize about electricity. Fortunately, the hypothesis can be seen to

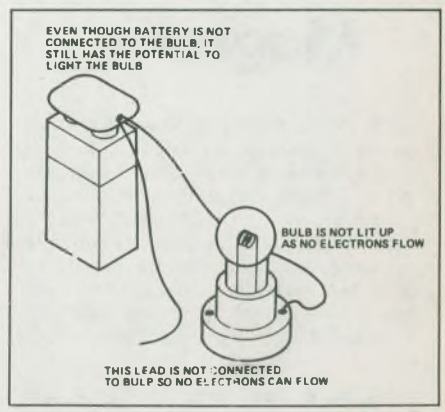

Fig. 3a. A battery forces electrons around a circuit.

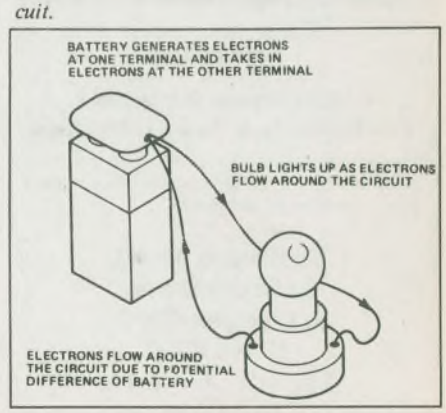

Fig. 3b. Even when the battery is disconnected and electrons don't flow, the battery still has a potential difference.

The most important peripheral you'll ever use: $19.95

Software Now! Magazine

Each month Software Now! is crammed with reviews, surveys and news about business, home and hacker programs. If you buy only one software package a year, it is still valid because it can make sure that you buy the **right** package. And because we are Canadian, we give Canadian sources and prices — we don't leave you with that "Yankee Magazine Frustration" feeling.

Available across Canada on newsstands and in many computer stores for **$2.95** a month, a **lot** less if you subscribe.

$19.95 a year (12 issues).
$34.95 for two years (24 issues)

Remember, you can get a refund on the unexpired portion of a subscription at any time, for any reason or no reason.

Software Now!
Subscriptions,
25 Overlea Blvd.,
Suite 601,
Toronto, Ontario,
M4H 1B1

Please see subscription card in this issue.

stand in all of the aspects of electricity and electronics we are likely to look at, so to all intents and purposes the hypothesis we have is absolute. This means we can build up ideas about electricity and be fairly sure they are correct.

With that out of the way, let's move on to the first idea: that electricity is a flow of electrons. To put it another way, any flow of electrons is electricity. If we can measure the electricity, we must therefore be able to say how many electrons were in the flow. Think of an analogy, say, the flow of water through a pipe (**Fig. 1**). The water has an evenly distributed number of foreign bodies in it. Let's say there are ten foreign bodies in every cm^3 of water.

Now, if 1 litre of water pours out of the end of the pipe into the bucket shown in Fig. 1, we can calculate the number of foreign bodies which have flowed through the pipe. There are 1000 cm^3 of water in a litre, so:

10 x 1000 = 10000

foreign bodies must have flowed through the pipe.

Alternatively, by knowing the number of foreign bodies which have flowed through the pipe, we may calculate the volume of water. If, for example, 25000 foreign bodies have flowed, then 2.5 litres of water will be in the bucket.

Charge

It's the same with electricity, except that we measure an amount of electricity not as a volume in litres, but as a charge in **coulombs**. The foreign bodies which make up the charge are, of course, electrons.

There is a definite relationship between electrons and charge: in fact, there are **6,250,000,000,000,000,000** electrons in one coulomb. But don't worry, it's not a number you have to remember — you don't even have to think about electrons and coulombs because the concept of electricity, as far as we're concerned, is not about electron flow, or volumes of electrons, but about flow rate and flow pressure. And as you'll now see, electricity flow rate and pressure are given their own names which don't even refer to electrons or coulombs.

Going back to the water and pipe analogy, flow rate would be measured as a volume of water which flowed through the pipe during a defined period of time, say 10 litres in one minute, 1000 litres in one hour or one litre in one second.

With electricity, flow rate is measured in a similar way, as a volume which flows past a point, during a defined period of time, except that volume is, of course, in coulombs. So, we could say that a flow rate of electricity is 10 coulombs in one minute, 1000 coulombs in one hour or one coulomb in one second.

We could say that, but we don't! Instead, in electricity, flow rate is called **current** (and given the symbol **I**, when drawn in a diagram). Electric current is measured in **amperes** (shortened to **amps**, or even further shortened to the unit **A**), where one amp is defined as a quantity of one coulomb passing a point in one second. Instead of saying 10 coulombs in one minute we would therefore say:

10/60 coulombs per second = 0.166A

Similarly, instead of a flow rate of 1000 coulombs in one hour, we say:

1000/3600 coulombs per second = 0.3A

The other important thing we need to know about electricity is flow pressure. Back to our analogy with the water and the pipe, **Fig. 2** shows a header tank of water at a height, h, in metres, is the head. The effect of gravity pushes down the water in the header tank, forming a flow pressure, forcing the water out of the pipe. It is the energy contained in the water in the header tank due to its higher position — its **potential energy** — which defines the water pressure.

With electricity the flow pressure is defined by the difference in numbers of electrons between two points. We say that this is a **potential difference**, partly because the difference depends on the positions of the points and how many electrons potentially exist. Another reason for the name *potential difference* comes from the early days in the pioneering of electricity, when the scientists of the day were making the first batteries. **Fig. 3a** shows the basic operating principle of a battery, which simply *generates* electrons at one terminal and takes in electrons at the other terminal. Fig. 3a also shows how the electrons from the battery flow around the circuit, lighting the bulb.

Under the conditions of **Fig. 3b**, however, nothing happens. This is because the two terminals aren't joined and so electrons can't flow. (If you think about it, they are joined by air, but air is an example of a material which doesn't allow electrons to flow through it under normal conditions. Air is an **insulator** or an **non-conductor**.) Nevertheless the battery has the potential to light the bulb and so the difference in numbers of electrons between two points (terminals in the case of the battery) is known as the potential difference.

A more usual name for the potential difference, though, is **voltage**. Cells are rated in volts (symbol: **V**) and so a cell having a voltage of 3V has a greater potential difference than a cell having a voltage of 2V. The higher the voltage, the

harder the cell can force electrons around a circuit. Voltage is simply a way of expressing electric *pushing power*.

Relationships

You'd be right in thinking that there must be some form of relationship between this pushing power in volts and the rate of electron flow in amps. After all, the higher the voltage, the more pushing power the electrons have behind them and so the faster they should flow. The relationship was first discovered by a scientist called Ohm, and so is commonly known as **Ohm's Law**. It may be summarized by the expression :

V/I = a constant

where the constant depends on the substance through which the current flows and the voltage is applied across. **Fig. 4** gives an example of a substance which is connected to a cell. The cell has a voltage of 2V, so the voltage applied across the substance is also 2V. The current through the substance is, in this case, 0.4A. This means, from Ohm's law, that the constant for the substance is:

2/0.4 = 5

The constant is commonly called the substance's **resistance** (because it is a measure of the amount the substance resists the flow of current through it) and is given the unit:Ω(pronounced ohm). In our example of Fig. 4, the resistance is 5 Ω. Different substances may have different resistances and may therefore change the current flowing.

This is a vitally important concept, probably the most important one in the whole world of electronics, and yet is often misunderstood. Even if it is not misunderstood, it is often misinterpreted. Lets recap it and see what it all means:

If a voltage (V in volts) is applied across a resistance (R in ohms), a current (I in amps) will flow. The voltage, current and resistance are related by expression (1) as V/I = R.

The importance of this is that the current which flows depends entirely on the values of the resistance and the voltage. The value of the current may be determined simply by rearranging expression 1, so that it gives (2):

V/R = I

So, a voltage of say 10V, applied across a resistance of 20 ohms produces a current of:

10/20 = 0.5A

Similarly, if we have a resistance, and a current is made to flow through it, then a voltage is produced across it. The value of the voltage may be determined by again rearranging expression (1), so that it now gives (3):

V = IR

Thus, a current of 1A flowing through a resistance of 5 ohms produces a voltage of 1 x 5 = 5V across the resistance.

These three expressions are the most common ones you'll meet in electronics, so look at 'em, read 'em, use 'em, and learn 'em, inwardly digest 'em — just don't forget 'em. Right? Right.

And another thing. See the way we've said throughout, that a voltage is applied or produced *across* a resistance. Similarly a current flows *through* a resistance. Just remember that a voltage is *across*: a voltage does not flow through. Likewise, a current flows through: it is not across. There is no such thing as a flow of voltage through a resistance, or a current across a resistance.

Electronic Components

The fact that different resistances produce different currents if a voltage is applied across them, or produce different voltages if a current is applied through them, is one of the most useful facts in electronics.

In electronics, an amp of current is a very large quantity — usually we only use much smaller currents, say, a thousandth or so of an amp. Sometimes we even use currents smaller than this, as little as a millionth of amp! Similarly, we sometimes need only small voltages, too.

Resistances are extremely useful in these cases, because they can be used to reduce the current flow or the voltage produce across them, due to the effects of Ohm's law. We'll look at ways and means of doing this later on in the series. All we need to know for now is that resistances are used in electronics to *control* current and voltage.

Table 1 shows how amps are related to the smaller values of current. A thousandth of an amp, for example, is known as a **milliamp** (unit: mA). A millionth of an amp is a **microamp** (unit: uA). Even smaller values of current are possible: a thousand millionth is a **nanoamp** (unit: nA); a million millionth is a **picoamp** (unit: pA). Chances are, you will never use or even specify a current value smaller than these, and you will rarely even use picoamps. Milliamps and microamps are quite commonly used.

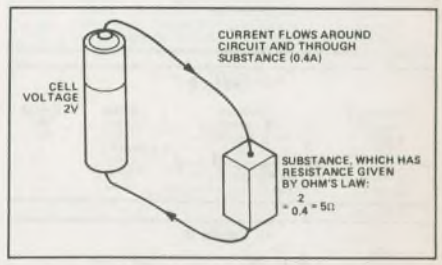

Fig. 4. The cell's voltage is 2V, and a current of 0.4A flows; the cubes resistance can be calculated by Ohm's law.

It is easy to move from one current value range to another, simply by moving the decimal point one way or the other by the correct multiple of three decimal places. In this way, a current of 0.01mA is the same as a current of 10uA which is the same as a current of 10000nA and so on.

Table 2 shows how volts are related to smaller values of voltage. Sometimes, however, large voltages exist (not so much in electronics, but in power electricity) and so these have been included in the table. The smaller values correspond to those of current, that is, a thousandth of a volt is a **millivolt** (unit: mV), a millionth of a volt is a **microvolt** (unit: uV) and so on — although anything smaller than a millivolt is only rarely used.

Larger values of voltage are the **kilovolt** (unit: kV), that is, one thousand volts, and the **megavolt** (unit: MV) which is one million volts.

Resistors

The components which are used as resistances are called, naturally, resistors. So that we can control current and voltage in specified ways, resistors are available in

Ohm's Law

A simple method to help you remember Ohm's law: remember a triangle, divided into three parts. Voltage (V) is at the top. Current (I) and resistance (R) are at the bottom. It doesn't matter which way around the R and I are — the important thing to remember is the V on top.

If you have any two of the constants, cover up the missing one with your finger and the formula for calculating the missing one will appear.

Say you know the voltage across a resistor and the current through it, but you need to know the resistance itself. Simply cover the letter R with your finger:

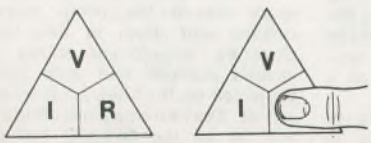

and the formula to calculate the resistance is V/I.

a number of values. Obviously, it would be impractical to have resistors of every possible value (1Ω, 2Ω, 3Ω, etc.) because literally hundreds of thousands — if not millions would exist.

Instead, agreed ranges of values exist: and manufacturers make their resistors to have those values, within a certain **tolerance**. **Table 3** shows a typical range of resistor values. This range is the most common. You can see from it that large values of resistors are available, measured in kilohms (thousands of ohms) and even in megohms (millions of ohms).

Table 1

Current Name	Meaning	Value	Symbol
amp	—	10^{0}A	A
milliamp	one thousandth of an amp	10^{-3}A	mA
microamp	one millionth of an amp	10^{-6}A	μA
nanoamp	one thousand millionth of an amp	10^{-9}A	nA
picoamp	one million millionth of an amp	10^{-12}A	pA
femtoamp	one thousand million millionth of an amp	10^{-15}A	fA

Table 2

Voltage name	Meaning	Value	Symbol
megavolt	one million volts	10^{6}V	MV
kilovolt	one thousand volts	10^{3}V	kV
volt	—	10^{0}V	V
millivolt	one thousandth of a volt	10^{-3}V	mV
microvolt	one millionth of a volt	10^{-6}V	uV
nanovolt	one thousand millionth of a volt	10^{-9}V	nV

Table 3

1 Ω	10 Ω	100 Ω	1k	10k	100k	1M	10M
1.2Ω	12 Ω	120 Ω	1k2	120k	1M2	—	
1.5Ω	15 Ω	150 Ω	1k5	15k	150k	1M5	—
1.8Ω	18 Ω	180 Ω	1k8	18k	180k	1M8	—
2.2Ω	22 Ω	220 Ω	2k2	22k	220k	2M2	—
2.7Ω	27 Ω	270 Ω	2k7	27k	270k	2M7	—
3.3Ω	33 Ω	330 Ω	3k3	33k	330k	3M3	—
3.9Ω	39 Ω	390 Ω	3k9	39k	390k	3M9	—
4.7Ω	47 Ω	470 Ω	4k7	47k	470k	4M7	—
5.6Ω	56 Ω	560 Ω	5k6	56k	560k	5M6	—
6.8Ω	68 Ω	680 Ω	6k8	68k	680k	6M8	—
8.2Ω	82 Ω	820 Ω	8k2	82k	820k	8M2	—

Resistor tolerance is specified as a plus or minus percentage. A 10 ohm 10% resistor may have an actual resistance within the range between 9 and 11 ohms.

As well as being rated in value and tolerance, resistors are also rated by the power they can safely dissipate as heat, without being damaged. As you'll well remember from our earlier discussion on soldering irons, power rating is expressed in watts, and this is true of resistor power ratings, too.

As the currents and voltages we use in electronics are normally pretty small, the resistors we use also have small power ratings. Typical everyday resistors have ratings of 1/4W, 1/3W, 1/2W, 1W etc. On the other end of the scale, for use in power electrical work, resistors are available with power ratings up to and over 100W or so. *To be continued.* ■

continued from page 7

Microterminal

The Burr-Brown TM2000 Microterminal can replace fragile CRTs in harsh industrial environments. It features an 8-bit microprocessor with RAM and ROM, EPROM capability, a 40-character fluorescent display and a 27-key keypad. Contact Allan Crawford Associates, System Products Division, 5835 Coopers Ave., Mississauga, Ont. L4Z 1Y2 (416) 890-2010.

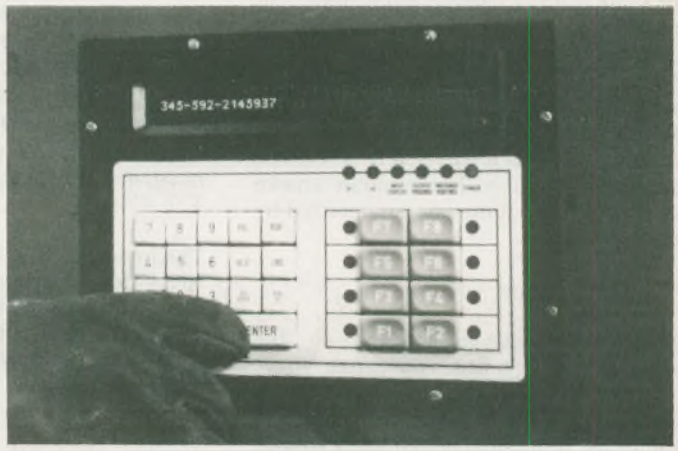

The Technical Service Council, One St. Clair Ave. E., Toronto, says that job vacancies for engineers and other professionals decreased 8 percent in the last three months but changed little in the last year. Of 99 specialists sought by employers, only systems analysts, computer programmers and mechanical sales engineers recorded more than 40 vacancies in a 1700-firm survey. Electrical technologists rated only ten vacancies. Sigh. On the other hand, the Canadian Appliance Manufacturers Association reports a stable but moderate growth for microwave ovens and air conditioners. All is not lost.

Digitizer

The HS-241-IE digitizer works with personal computers over a 24 by 36 inch area. It has 0.001 inch resolution, RS232 output, metric/imperial conversion, and fixed or floating origin. It can run in five different modes and various options are available. Contact Gentian Electronics, PO Box 1240, Stittsville, Ont. K0A 3G0 (613) 836-3987.

Mitsubishi Electric Corporation, jointly with Korakuen Stadium Co., recently started marketing the "Flying Cabin" amusement machine that moves in synchronization with the image on a screen inside the cabin.

A six axis hydraulic system used for a flight simulator is employed in the Flying Cabin for computer-controlled synchronization of the moves of the 44-man cabin with the screen's crisp images and six channel sound.

The Flying Cabin simulates space travel: the cabin sways, careens and dives in line with changing magnificent scenes of ground surfaces and deep space projected on the huge 1.5m-by-4m screen. The two companies hope to sell 20 of the $60,000 systems machine in Japan and 40 systems abroad in the coming five years, chiefly to amusement parks, shopping centers and science museums.

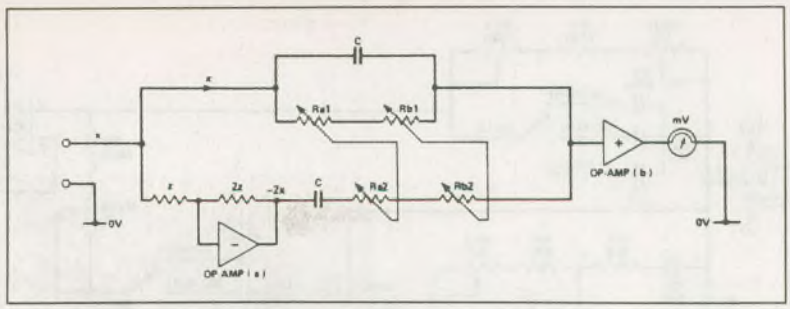

Fig. 1 The configuration of the Wien bridge used by the author; it has advantages over the more common differential version.

Distortion Meter

The distortion meter is a useful piece of test equipment that can quickly give a circuit a clean bill of health (or not). Here is the first of two parts on building your own.

By John Linsley Hood

THE IDEAL power amplifier, along with other pieces of audio signal handling gear not intended to modify the frequency response of a system, is best described by the old adage "a piece of wire with gain". This implies that the equipment does not modify or impair the signal being handled except to amplify or add muscle power.

However, if this is the specification, how do we check to see how well or how badly this requirement is being met? This is, alas something on which there is very little agreement between audio engineers or circuit designers. So, before we consider the hardware, we need to examine the job we want it to do.

In simple terms, what we want is that the output from an amplifier should be identical to the input, except that it might be bigger or smaller or perhaps one part of the frequency spectrum has been enlarged or diminished. This is an awkward bit, so let's leave that to one side for the moment and just look a the simple flat-frequency response area.

When people first considered this problem, their thoughts turned to the examination of a continuous, fixed-frequency sine wave somewhere in the middle of the audible band, say at 1000Hz. The logic of this was that any distortion of this waveform would lead to the generation of harmonics of the input signal, and these could be isolated and measured.

The problem with this approach is that it is highly artificial. We simply do not listen for enjoyment to steady single tones. Nevertheless, the technique is a useful one, especially if the output from the distortion meter can be examined on an oscilloscope. Quite a lot of information about its defects can then be gained, allowing the affects of changes to be assessed.

The most common of this kind of meter is the simple notch filter which will remove the incoming sine wave and leave only the waveform impurities which have been added by the hardware which we are testing.

The sort of result we would get at the output of the distortion meter is a small waveform which when added back to the distorted output would give us the pure signal with which we started. The waveform of the distortion products may be symmetrical about the zero axis, indicating distortion on both halves of the cycles, or it may be negative or positive spikes, indicating trouble on only one half of the cycle (such as an amplifier clipping on only the negative cycle).

The most conspicuous audible effect of the presence of large amounts of low-order distortion (mostly 2nd and 3rd) is that harmonic tones are added to the signal, making the system sound rather shrill. Those of us with long memories will recall the sound of output pentode power tubes, which caused generous quantities of 3rd order distortion. Triodes were much preferred since they generated mostly 2nd harmonic distortion, and this was lower down in the spectrum and sounded less "squawky".

Also, as one might guess, these low-order harmonics do in fact harmonize with the input signal; once one gets beyond the 3rd in the odd-orders or the 6th in the evens, the tones become increasingly dissonant and objectionable to the listener.

This was one of the reasons why the first transistor amplifiers were so much worse than the tubes they replaced, even at 0.1 percent distortion; the distortion products were 7th, 9th, 11th and other dissonant odd harmonics.

A way of measuring distortion distinct from the notch method is to put in a high-purity sine wave and then display the output of the amplifier as a sweep of the frequency response on a spectrum analyzer. The various harmonic products will be displayed on a vertical log scale, either on a paper printout or a video screen. While the display is very effective, it's a bit hard to read if the distortion is down around 0.01 percent, not to mention the cost of the equipment required.

Notching

The Total Harmonic Distortion meter in this project is the Wien bridge notch type; it produces a sharp notch in the frequency response which removes the fundamental of the test tone being used. Anything left over should consist of distortion products plus hum and noise. The noise can be subtracted by disconnecting the signal source; we'll come back to applications in the second part of the article.

The basic layout of the meter is shown in **Fig. 1** and the circuit diagram in **Fig. 2**. The total circuit consists of the meter, a millivoltmeter, a built-in

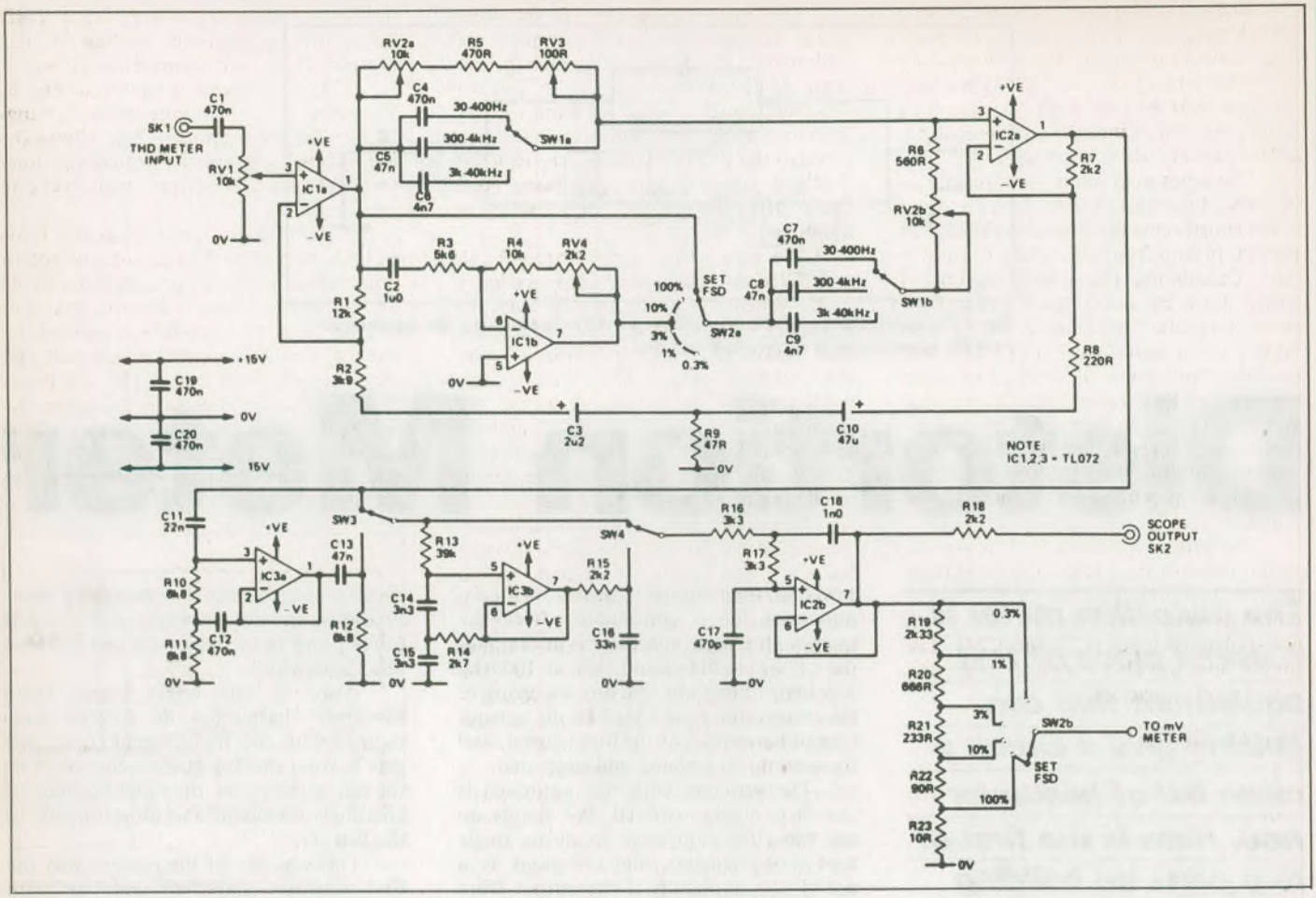

Fig. 2 The final circuit diagram of THD meter.

oscillator, and a regulated power supply. There is also a converter for running the unit from a single battery.

The Meter Bridge

In Fig. 2, RV1 acts as a gain control in the input circuit of IC1a, a buffer stage that ensures that the Wien network is always driven from a low impedance. From the output of this the signal is divided into three paths, the upper RC parallel network, the inverter stage, and a feed to the mode switch SW2, which allows the network to be bypassed for setting the full scale meter reading.

In the other positions of SW2, the two halves of the network are connected to produce the notch characteristic required. For a perfect balance to be obtained, the input from the inverter to the lower section needs to be exactly twice as large as the input to the upper. To arrange this, a 2K2 10-turn pot, RV4, is connected in series with the op-amp feedback resistor so that its gain can be adjusted. This is the Trim control on the front panel.

Ideally, the tuning of this instrument would be done by dual gang pots, Ra and Rb. However, I wanted to keep circuit impedances as low as possible for minimum hum pickup and circuit noise, and 1K dual pots are hard to come by. I have therefore, with regret, because it makes the instrument a little more difficult to use, opted for a single fine-tune pot, the 100 ohm RV3. This means that notching out requires the interaction of RV3 and RV4. If a decent quality low resistance dual pot is available, the other half should be inserted in series with R6, whose value can then be reduced to 470 ohms.

It is necessary to sharpen up the notch a bit to prevent unwanted attenuation of the lower harmonics, and this is done by negative feedback to IC1 from IC2 through R9, R2, and R8.

There are two signal infiltration stages. IC3a is a highpass hum filter with a turnover frequency of 250Hz and a slope of 18dB/octave; a similar lowpass built around IC3b has a similar slope and a turnover frequency of 4700Hz. These two options are selected by SW3 and SW4. The lowpass HF-noise filter allows an instrumental identification of the harmonics associated with crossover distortion, which with a 1KHz signal would be at 7, 9, 11, and 13KHz.

So, if the minimum signal is noted on a test at 1KHz and the lowpass filter is then switched in and the new minimum noted, the amount of high-order harmonics present can be determined by an RMS subtraction of the two values. To distinguish between high-order harmonics and general noise, the extent to which the difference between the filtered and unfiltered signal levels changes when the signal input is removed can be noted.

The final stage of the distortion meter part of the circuit is the buffer amplifier, which precedes the meter attenuator, and from which an oscilloscope monitor signal can be obtained if needed.

An option included is the 50KHz, 12dB/oct, unity-gain rolloff buffer IC2b, which serves as a useful bandwidth limit. If this is not required, the output of SW4 can be sent to the non-inverting input of IC2b and C17, C18, R16, and R17 deleted.

The Millivoltmeter

Since any distortion meter requires an AC millivoltmeter to display its result, and the millivoltmeter is a useful bench instrument, I have decided to make the input to the measuring circuit available separately by way of a switched attenuator, **Fig. 3.**

The circuit is straightforward, with a 100uA meter in a diode bridge in the feedback network of an op-amp. I have used a dual FET amp (TL072 or LF353) in which the first half acts as a gain stage. This allows both high input impedance and a 20Hz-100KHz -3dB bandwidth.

The input attenuator has a resistance of 100K ohms; this can be scaled up to 1M if the constructor takes care to shield it to prevent pickup from other parts of the circuit. Calculating the actual resistors is easily done by using the current flow down the chain. For instance, 100V across 100k gives a current of 1mA. This will develop 10mV across 10 ohms, and hence the value of R32, and so on. Odd resistor values can be made up by paralleling standard values, depending on the accuracy required. For instance, a 6k66 resistor can be made up by putting a 330k and a 6k8 in parallel.

The proper operation of this type of circuit depends on a low impedance from the non-inverting input to ground, so the tantalum beads are bypassed with small non-polarzied types (C22 and C24). The supply lines are also bypassed to ground with 0.47uF capacitors.

The Oscillator

It's a great convenience to have an oscillator actually on the instrument, and from my experience I find that one does not need a continuous spread of frequencies, but rather a few spot points. The reason for this is that if you know how a system behaves at, say, 1KHz or 3Khz, its behaviour at 1500Hz or 3500Hz is unlikely to be anything but intermediate between the known points.

The basic circuit used is the Wien bridge system. The inverting input is fed with two feedback signals through the sections of the Wien network. A positive feedback signal is obtained from the two inverting amplifiers connected in series through the RC element, and the negative feedback signal is fed to the same point from the output of the inverting amplifier.

The gain of the second amplifier is controlled by a thermistor in the feedback path. When the thermistor is cold, its resistance is high and ICb has a high gain. This makes the positive feedback larger than the negative and the system oscillates. The output signal warms the thermistor, lowers its resistance, and increases the negative feedback to lower the gain to just enough to keep the circuit oscillating at a constant amplitude.

Because op amps have a lower distortion in the non-inverting mode (surprising but true), and because the circuit has no common-mode signal which the op-amp must cancel, the distortion produced by this circuit is extremely low. **Table 1** shows the distortion performance of the oscillator. The high distortion a low frequencies is mostly third harmonic, caused by the thermistor resistance actually varying with the waveform amplitude. This is inherent in amplitude-stabilized systems.

The output from ICb is about 600-700mV with an RA53, and the signal level at the output of ICa is about half this. I mention this because ICa is an integrator with a response which decreases with frequency, reducing the third harmonic distortion to about one-third at ICa, making a very low distortion oscillator indeed. However, for a THD meter with a minimum reading of .005 percent, the circuit shown is adequate.

The final circuit is shown in **Fig. 5.** The value of C is constant and R is changed to alter the frequency; this allows the use of easily-obtained resistors and only two close-tolerance polystyrene capacitors.

A three-stage output attenuator is used in combination with the output potentiometer to give output signal levels of 0-6mV, 0-60mV and 0-600mV. The output can be increased to about one volt by putting a resistor of 500 ohms and 1k5 ohms in series with RA53. This will lower the distortion slightly, but will increase the settling time. On the prototype this is 2000 cycles, about 20 seconds at 100 Hz, but this will vary from one thermistor to another.

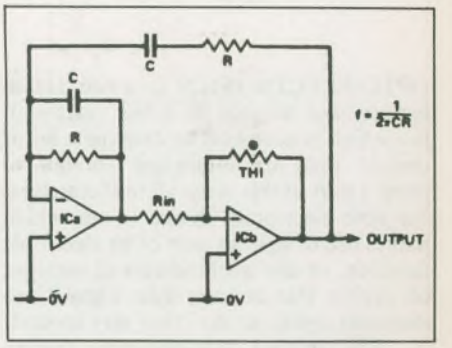

Fig. 4 The basic arrangement used in the spot frequency oscillator.

Power Supply

The total current consumption of the instrument is 18mA at plus and minus 15 volts, which is obtained from a small stabilized supply.

It is possible to make the instrument operate from batteries. Two options exist. The first is use a pair of 6V or 9V batteries, such as the popular 9V radio battery, and switch both supply rails. The second is to use a single 9V battery and use the adapter shown to give plus and minus 4V5. In both cases it is worthwhile substituting TL062s for IC1, IC2, IC3, and IC5, and a TL061 for IC4. This reduces current consumption to 1.5 to 2mA with little performance penalty.

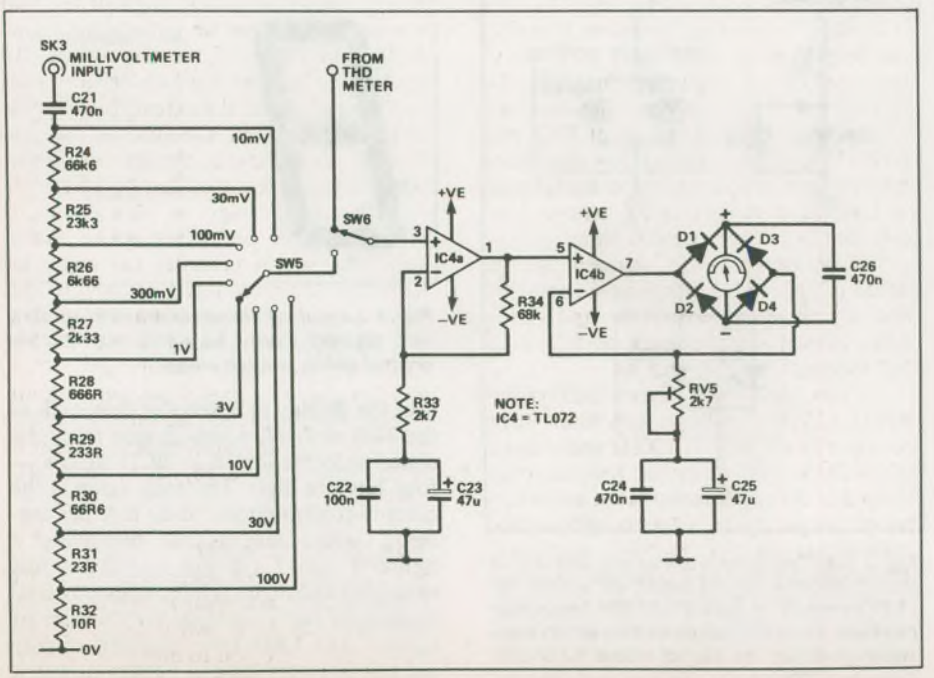

Fig. 3 The circuit diagram of the millivoltmeter.

FREQUENCY (Hz)	THD (%)
100	0.02
300	0.005
1k	less than 0.003
3k	less than 0.003
10k	less than 0.003
20k	less than 0.003

Table 1 Measured performance of the spot frequency oscillator.

continued on page 48

Configurations

This month, a look at — opto-electronics.

By Ian Sinclair

OPTO-ELECTRONICS is a word that hadn't been thought of a few years ago, but which is now used to describe a set of devices that are important enough to merit a part of this series all to themselves. An opto-electronics device is one which makes use of light as part of its electronic function, so this label includes all varieties of devices that convert light signals into electrical signals or the other way around.

The simplest opto-electronic devices of the electricity-to-light type are the familiar LEDs. Familiar they may be, but even experienced engineers are not always aware of their eccentricities. Like any other diode the LED has an anode and a cathode, and passes current in the forward bias direction; this is when the light is emitted. What is not nearly so well known is that the peak reverse voltage of these diodes is very low; if you get an LED the wrong way round in a circuit, it's usually curtains for the LED when the voltage is switched on. A typical value of peak reverse voltage is 3V, so practically any circuit that will operate the LED when it is connected the right way round (Fig. 1) will blow it up if it happens to be the wrong way round.

In addition, the forward voltage across the LED is very much higher than the 0V6 that we merrily assume for a silicon diode. For gallium arsenide, the material used for many types of LEDs, the forward voltage is more like 2V1 to 2V4, so that LEDs are of little use in very low-voltage circuit — they won't, for example, work from a 1V5 cell.

Current Affairs

One of the major snags about LEDs is that they consume a surprising amount of current. Manufacturers quote 'adequate' light output for red LEDs with 5 to

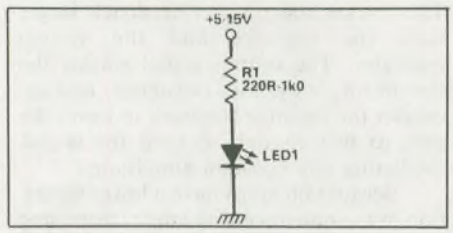

Fig. 1 The basic LED operating circuit. A current-limiting resistor must always be used unless the output resistance of the driving circuit is high.

25mA, and for the green/yellow varieties with 10 to 40 mA. This wouldn't be missed in a circuit operating at 5 V, 2.5 amps, but it can be quite a drain on battery equipment, often considerably more than all the CMOS ICs in a circuit intended for battery operation.

LEDs can be used with AC supplies providing there is a diode connected in reverse across each LED (to prevent excessive reverse voltage) as well as the usual

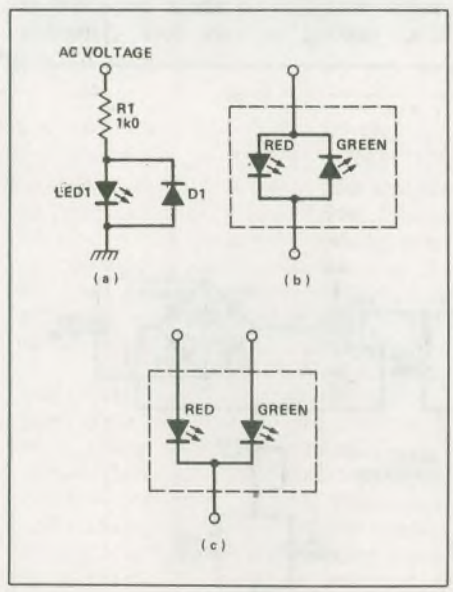

Fig. 2 LED operation. (a) For use with AC, a silicon diode must be connected across the LED terminals as shown. (b) The two-colour LED uses two LED junctions connected in opposite direction. (c) The tri-colour LED uses separate LEDs with a common cathode connection.

current limiting resistor (Fig. 2a). Bi-colour LEDs consist of a package of two LEDs in one casing, connected in inverse parallel so that current in one direction will give a light of one colour, while the other colour is achieved by reversing the current (Fig. 2b). In this circuit, one LED protects the other against reverse voltage. Tri-colour indicators (Fig. 2c) use two diodes with a common cathode connection and separate anode leads, so that three colours can be indicated, one in each lead, plus yellow when both LED sections are activated. Personally, for indicating when power is on, I much prefer the old-fashioned neon.

On Display

When it comes to digit displays, LED types have quite a lot of competition. The traditional seven-segment display (Fig. 3) comes as a common anode or a common-cathode type (Fig. 4), and each type needs a separate limiting resistor in each driver lead. The normal method of use is to con-

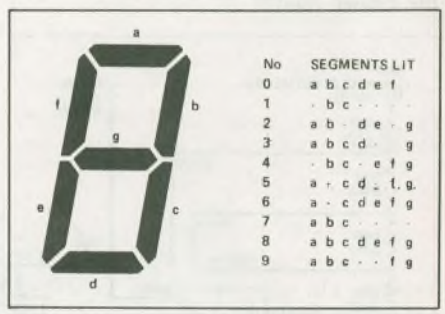

Fig. 3 Layout of the seven-segment display, with segment guide. An eighth segment, the decimal point, is often added.

nect the display to a decoder chip such as the 7448 or 7447, which in turn takes the digital information in as BCD signals — four bits per digit. The snag again is the current consumption, 10-20 mA per segment, which means that displaying a figure '8' uses 7 x 20 mA — 140 mA just to display one digit! While mains-powered equipment isn't too upset by this size of current, the LED seven-segment display did not last very long in battery-powered devices, even when multiplexing was used.

Multiplexing means that only one digit at a time is activated, the digits being switched on in sequence fast enough to present the appearance of all the digits being illuminated at once.

Oddly enough, the forward voltage for the segments of an LED seven-segment display tends to be lower than for diodes, around 1V3 to 1V7. At temperatures above about 25°C, the maximum current has to be reduced by 0.3 mA per degree to avoid over-dissipation of the junction in each segment.

One competitive display that seems to be much less well-known is the filament seven-segment display. This can use as little as 5 mA per segment, and looks surprisingly bright — it can be driven by a

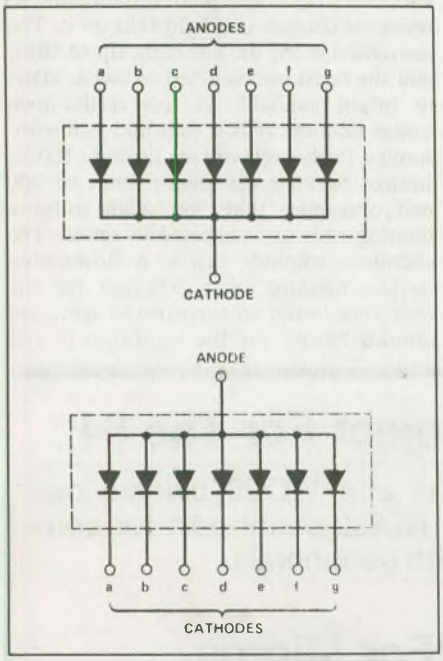

Fig. 4 Internal connections for common anode and common cathode displays. Whichever type is used, there must be a separate limiting resistor for each segment.

decoder directly with no limiting resistors, and for many purposes is superior to LED displays. The usual reason for preferring solid-state displays is long life, but the quoted life of more than 100,000 hours for the filament type of display is pretty competitive and some LED displays are notorious for short life.

Oldies But Goodies

The two older types of displays which are also worth considering are the electron-beam type and the gas-discharge type. The electron beam display uses a miniature cathode wire to emit electrons, which will then be attracted to any positive anode. The anodes are coated with phosphors (similar to the phosphors used in cathode ray tubes), and any anode which is positive to the cathode by a sufficient

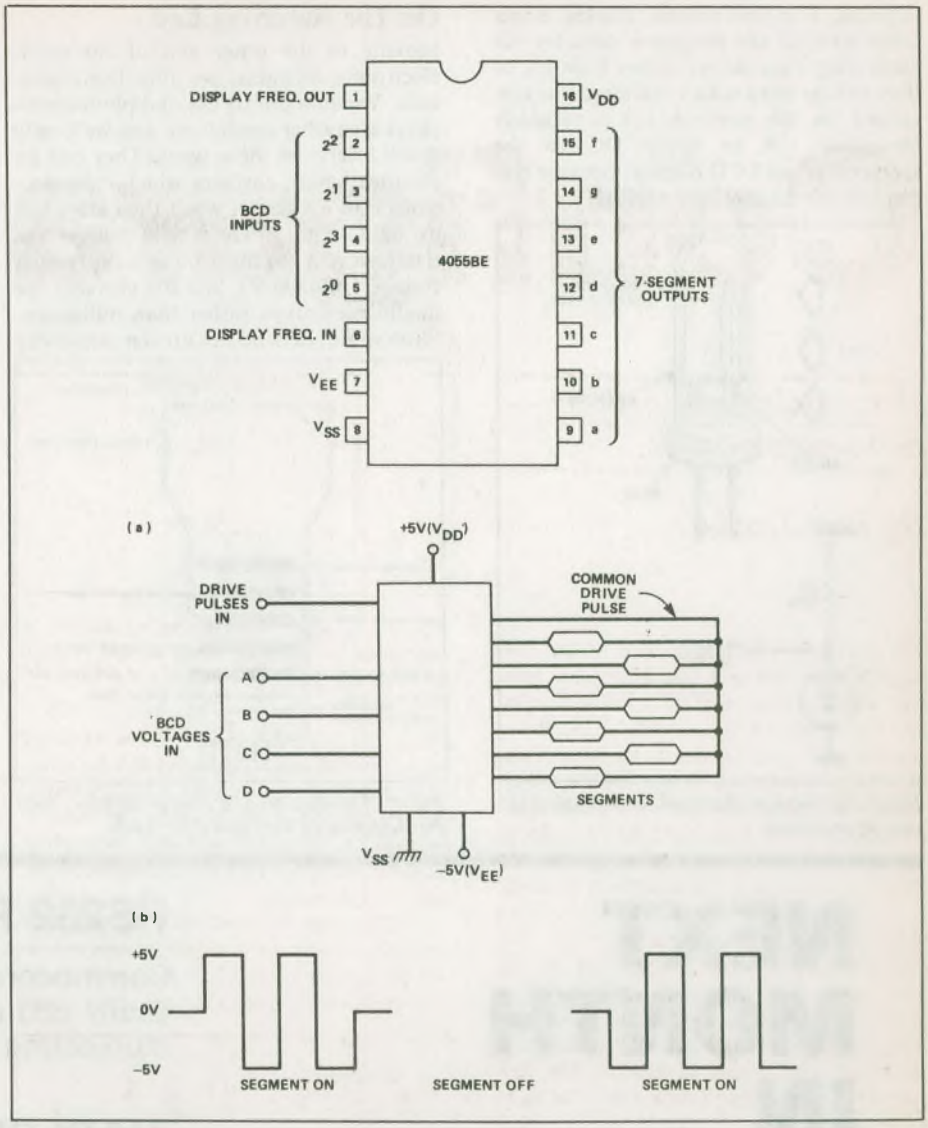

Fig. 5 Driving LCD displays. The common lead of the LCD display must not be earthed; it has to be returned to the driver IC. The waveform (b) applied is AC with no trace of DC.

voltage will glow. A 24-40 V supply is needed, which usually means the use of an inverter when low-voltage batteries are used, as in calculators. The display easy to read, and uses less current than the LED type — I still prefer a calculator using this type of display to one using the more-common LCD display.

The gas-discharge display is an older type which uses the principle of the neon light — ionisation of a low-pressure gas in an electric field. Like all gas-discharge, this needs a high operating voltage, around 150-250 V, but the operating current is very low: only 0.7 mA per segment in a typical application. The display is very bright, and is worth considering for 120 operated equipment whose display has to be viewed under difficult illumination conditions, such as alternate brightness and darkness. A driver IC is available nowadays — in times past (dare we say the Dark Ages?), the major handicap of using this type of display was the lack of suitable driver transistors.

Liquid Light

Last among the displays, of course, there is the LCD. A good LCD can give a dense black indication against a light grey background, is clearly visible in bright light, and reasonably visible even in low illumination conditions. There's a lot of variation between displays, however, even from the same manufacturer and some are poor, with low contrast and very slow response to changing digits. Prices also vary considerably — one catalogue lists the price of a calculator-size display as being twice as much as I would have to pay for a complete calculator using a similar display!

Operating conditions for these displays are very different from those of ther types of displays, because they have to be operated from high-frequency AC

supplies. For this reason, display either come with all the necessary circuitry for generating their driver pulses built in, or they can be used with a standard chip intended for this purpose. It's particularly important not to apply DC to the segments of an LCD display, because this can kill the display very rapidly.

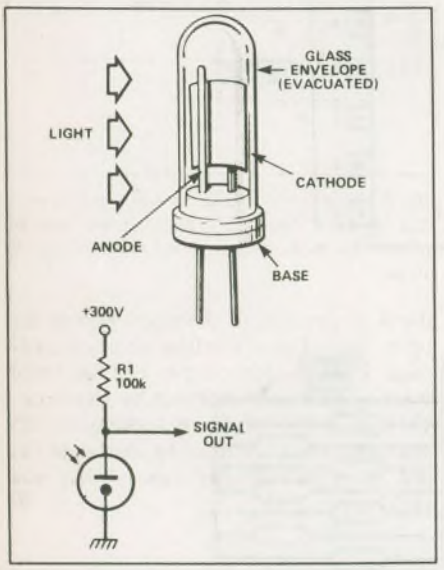

Fig. 6 The vacuum photocell, and a typical circuit arrangement.

On The Receiving End

Moving to the other end of the opto-electronics business, we find the photocells. Vacuum photocells and photomultipliers are rather specialised, and we'll only touch briefly on these types. They rely on photocathodes, surfaces which emit electrons into a vacuum when they are stuck by light. The anode which collects the electrons (Fig. 6) must be at a fairly high voltage (100-500 V), and the currents are small: microamps rather than milliamps. Photomultipliers obtain greater sensitivity

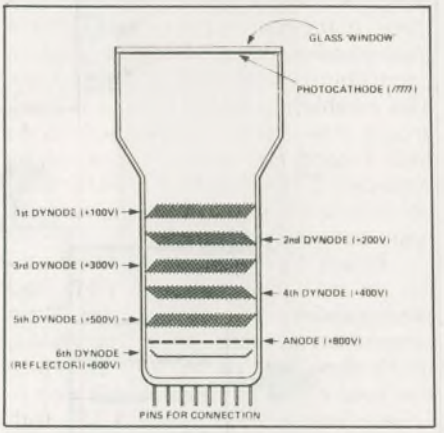

Fig. 7 Cross-section of a photomultiplier, used for detection of very low light levels.

and increased output by using secondary multiplication, meaning that the elctrons from the cathode (Fig. 7) are accelerated to surfaces, called dynodes, which will release elctrons each time an electron strikes the surface. If each of these multipliers releases two to five electrons for each striking electron, spectacular gain can be achieved which, unlike amplification of signals by conventional methods, is practically noise-free.

The more familiar solid-state light-to-electrical-signal devices that we use are the solid-state photodetectors, of which the most commonly used is the cadmium sulphide cell. The ORP 12 is the standard device of this type, often called an LDR (light dependent resistor). The cell consists of a strip of cadmium sulphide whose resitance decreases as light falls on it. The resistance in the dark is high, up to 10M, and the resistance can fall as low as 100R in bright sunlight. A less well-known aspect of these cells is that they can withstand a fairly high voltage, around 100 V; subject to their dissipation limit of 200 mW, meaning that you might need a limiting resistor connected in series. The cadmium sulphide cell is a slow-acting device, needing about 350 mS for the resistance to fall on exposure to light, and around 75 mS for the resistance to rise

NEXT MONTH IN Electronics Today

RS232 Project For The 64

Commodore 64 and VIC-20 owners can easily add an RS232 serial port for communicating with peripherals.

NAPLPS For Micros

Telecommunications graphics for personal computers is explained.

Dual Tracking Power Supply Project

A professional lab-quality power supply for upgrading your testbench.

For Advertising Information call (416) 423-3262
For Subscription Information call (416) 423-3263

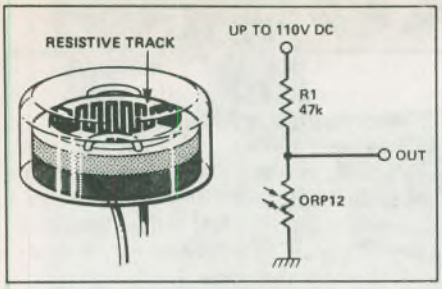

Fig. 8 The photoresistive cell or light-dependent resistor (LDR)

again when the light is shut off. The response to different colours is generally similar to that of the human eye, but the cadmium sulphide is much more sensitive to red and infrared, which is why its use in cameras is now less common than it was some 10 years ago.

Fun With Photodiodes

Other light detectors need some degree of amplification. Photodiodes are diodes of fairly conventional construction, with a transparent window over the junction, which is used reverse-biased. For such a diode, the reverse leakage current increases as the intensity of light on the junction is increased. This current is small, ranging from around 1 nA in darkness to almost 1 mA in very bright light, so that amplification is usually necessary, as in the circuit of Fig. 9. The response time is about 250 nS, so that the op-amps shown in Fig. 9 would have to be replaced by a transistor circuit, using high-speed switching tansistors, if you wanted to use the photodiode for high-speed signals. Combined photodiode/op-amp packages can be bought for medium-speed applications.

Th old-style phototransistor, which was a transistor formed with a window above the base-collector junction, is a thing of the past; what is now called a phototransistor is a combination of silicon photodiode and transistor in one package. This combines a sensitivity that is much greater than that of a photodiode alone with a good fast response time, giving typically a 2 MHz bandwidth. This is particularly useful for receiver use in light-beam transmission systems.

Finally the opto-isolators, which consist of a combination of LED and phototransistor is a single package. These components are embedded in clear plastic, which allows light transmission but which is a good electrical insulator. It's easy to achieve isolation to at least 4 kV, with reasonable signal transmission. For an ordinary isolator the output signal will be

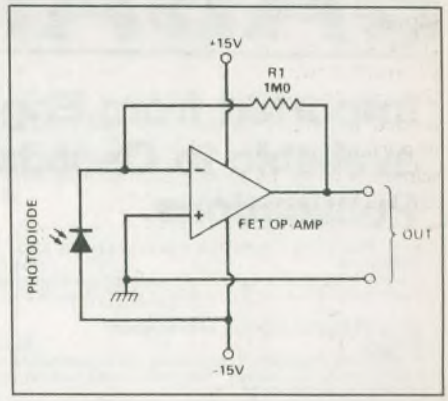

Fig. 9 Using a photodiode in conjunction with FET op-amp. The FET type is needed because of the very high impedance of the photodiode circuit.

about 20 per cent of the amplitude of the input, but when a Darlington phototransistor is used, the output can be three times or more the amplitude of the input. It's just the device I was looking for 25 years ago when I wanted to modulate the grid of a cathode-ray tube which was working at -4 kV! ■

This Month in

Computing Now!

Sloth For The Z80
Build a small Z80-based computer.

Walking Fingers For the PC
A directory sort similar to CPM's D.COM.

PROM Night For The Apple
A Z80 assembler program to run an EPROM burner.

Tandy 200 Review
A look at Tandy's upgrade of the popular Model 100.

Apple Assembly Animation
Hi-Res shape handling for the Apple.

Plus
More reviews, articles and listings.

Software Now!

Microcomputer Training Seminars
Talking with some seminar organizers and sitting in on classes to give you an idea of what to expect from your money.

Execuvision
A review of Prentice-Hall's cut and paste graphics package.

GEM Desktop and GEM Draw
A preview of the first GEM (Graphics Environment Manager) applications from Digital Research.

Mind Prober
A spooky piece of software that lets you analyze other people's personalities. Skeptical? I knew it!

Plus
More reviews, news and features for Canadian micro users.

For Subscription Information call (416) 423-3262.

BABANI BOOKS

Imported from England and exclusively available in Canada from Moorshead Publications.

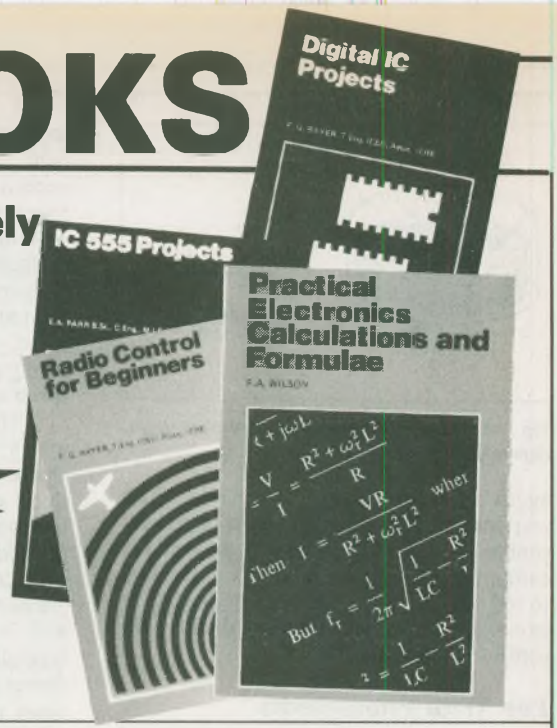

NEW RELEASES

BP53: PRACTICAL ELECTRONICS CALCULATIONS AND FORMULAE $11.75
A book that bridges the gap between complicated technical theory and the 'cut and try' method. A good reference book.

BP136: 25 SIMPLE INDOOR AND WINDOW AERIALS $6.65
People living in apartments who would like to improve short-wave listening can benefit from these instructions on optimising the indoor aerial.

BP147: AN INTRODUCTION TO 6502 MACHINE CODE $7.75
The popular 6502 microprocessor is used in many home computers; this is a guide to beginning assembly language.

BP150: AN INTRO. TO PROGRAMMING THE SINCLAIR QL $7.75
Helps the reader make the best use of the Sinclair QL's almost unlimited range of features. Complements the manufacturer's handbook.

BP225: A PRACTICAL INTRODUCTION TO DIGITAL ICs $6.65
This book deals mainly with TTL type chips such as the 7400 series. Simple projects and a complete practical construction of a Logic Test Circuit Set are included as well as details for a more complicated Digital Counter Timer project.

BP130: MICRO INTERFACING CIRUITS - BOOK 1 $8.55
Aimed at those who have some previous knowledge of electronics, but not necessarily an extensive one, the basis of the book is to help the individual understand the principles of interfacing circuits to microprocessor equipment.

BP131: MICRO INTERFACING CIRCUITS - BOOK 2 $8.55
Intended to carry on from Book 1, this book deals with practical applications beyond the parallel and serial interface. "Real world" interfacing such as sound and speech generators, temperature and optical sensors, and motor controls are discussed using practical circuit descriptions.

BP111: AUDIO $13.25
This one is ideal for readers who want to really get into sound. A wide range of material is covered from analysis of the sound wave, mechanisms of hearing, room acoustics, microphones and loudspeakers, amplifiers, and magnetic disc recording.

BP82: ELECTRONIC PROJECTS USING SOLAR CELLS $7.75
A collection of simple circuits which have applications in and around the home using the energy of the sun to power them. The book deals with practical solar power supplies including voltage doubler and tripler circuits, as well as a number of projects.

BP156: AN INTRODUCTION TO QL MACHINE CODE $7.75
The powerful Sinclair QL microcomputer has some outstanding capabilities in terms of its internal structure. With a 32-bit architecture, the QL has a large address range, advanced instructions which include multiplication and division. These features give the budding machine code programmer a good start at advanced programming methods. This book assumes no previous knowledge of either the 68008 or machine code programming.

BP47: MOBILE DISCOTHEQUE HANDBOOK $5.25
Divided into six parts, this book covers such areas of mobile "disco" as: Basic Electricity, Audio, Ancillary Equipment, Cables and Plugs, Loudspeakers, and Lighting. All the information has been considerably sub-divided for quick and easy reference.

BP59: SECOND BOOK OF CMOS IC PROJECTS $7.75
This book carries on from its predecessor and provides a further selection of useful circuits, mainly of a simple nature, the book will be well within the capabilities of the beginner and more advanced constructor.

BP32: HOW TO BUILD YOUR OWN METAL & TREASURE LOCATORS $7.75
Several fascinating applications with complete electronic and practical details on the simple, and inexpensive construction of Heterodyne Metal Locators.

ELECTRONIC THEORY

ELEMENTS OF ELECTRONICS — AN ON-GOING SERIES
F.A. WILSON, C.G.I.A., C.Eng.,

BP62: BOOK 1. The Simple Electronic Circuit and Components $11.70
BP63: BOOK 2. Alternating Current Theory $ 8.55
BP64: BOOK 3. Semiconductor Technology $18.55
BP77: BOOK 4. Microprocessing Systems And Circuits $11.70
BP89: BOOK 5. Communication $11.70

The aim of this series of books can be stated quite simply — it is to provide an inexpensive introduction to modern electronics so that the reader will start on the right road by thoroughly understanding the fundamental principles involved.

Although written especially for readers with no more than ordinary arithmetical skills, the use of mathematics is not avoided and all the mathematics required is taught as the reader progresses.

Each book is a complete treatise of a particular branch of the subject and, therefore, can be used on its own with one proviso, that the later books do not duplicate material from their predecessors, thus a working knowledge of the subjects covered by the earlier books is assumed.

BOOK 1. This book contains all the fundamental theory necessary to lead to a full understanding of the simple electronic circuit and its main components.

BOOK 2. This book continues with alternating current theory without which there can be no comprehension of speech, music, radio, television or even the electricity utilities.

BOOK 3. Follows on semiconductor technology, leading up to transistors and integrated circuits.

BOOK 4. A complete description of the internal workings of microprocessor.

BOOK 5. A book covering the whole communication scene.

PROJECTS

BP48: ELECTRONIC PROJECTS FOR BEGINNERS $7.75
F.G. RAYER, T.Eng.(CEI), Assoc.IERE
Another book written by the very experienced author — Mr. F.G. Rayer — and in it the newcomer to electronics, will find a wide range of easily made projects. Also, there are a considerable number of actual component and wiring layouts, to aid the beginner.

Furthermore, a number of projects have been arranged so that they can be constructed without any need for soldering and thus, avoid the need for a soldering iron.

Also, many of the later projects can be built along the lines as those in the 'No Soldering' section so this may considerably increase the scope of projects which the newcomer can build and use.

BP37: 50 PROJECTS USING RELAYS, SCR's & TRIACS $7.75
F.G. RAYER, T.Eng.(CEI), Assoc IERE
Relays, silicon controlled rectifiers (SCR's) and bi-directional triodes (TRIACs) have a wide range of applications in electronics today. This book gives tried and practical working circuits which should present the minimum of difficulty for the enthusiast to construct. In most of the circuits there is a wide latitude in component values and types, allowing easy modification of circuits or ready adaptation of them to individual needs.

BP221: 28 TESTED TRANSISTOR PROJECTS
R.TORRENS $5.00
Mr. Richard Torrens is a well experienced electronics development engineer and has designed, developed, built and tested the many useful and interesting circuits included in this book. The projects themselves can be split down into simpler building blocks, which are shown separated by boxes in the circuits for ease of description, and also to enable any reader who wishes to combine boxes from different projects to realise ideas of his own.

BP71: ELECTRONIC HOUSEHOLD PROJECTS $7.20
R. A. PENFOLD
Some of the most useful and popular electronic construction projects are those that can be used in or around the home. The circuits range from such things as '2 Tone Door Buzzer', Intercom, through Smoke or Gas Detectors to Baby and Freezer Alarms.

BP73: REMOTE CONTROL PROJECTS $8.10
OWEN BISHOP
This book is aimed primarily at the electronics enthusiast who wishes to experiment with remote control. Full explanations have been given so that the reader can fully understand how the circuits work and can more easily see how to modify them for other purposes, depending on personal requirements. Not only are radio control systems considered but also infra-red, visible light and ultrasonic systems as are the use of Logic ICs and Pulse position modulation etc.

BP90: AUDIO PROJECTS $7.60
F.G. RAYER
Covers in detail the construction of a wide range of audio projects. The text has been divided into preamplifiers and mixers, power amplifiers, tone controls and matching and miscellaneous projects.

BP74: ELECTRONIC MUSIC PROJECTS $7.20
R.A. PENFOLD
Although one of the more recent branches of amateur electronics, electronic music has now become extremely popular and there are many projects which fall into this category. The purpose of this book is to provide the constructor with a number of practical circuits for the less complex items of electronic music equipment, including such things as a Fuzz Box, Waa-Waa Pedal, Sustain Unit, Reverberation and Phaser-Units, Tremelo Generator etc.

BP44: IC 555 PROJECTS $7.75
E.A. PARR, B.Sc., C.Eng., M.I.E.E.
Every so often a device appears that is so useful that one wonders how life went on before without it. The 555 timer is such a device. Included in this book are Basic and General Circuits, Motor Car and Model Railway Circuits, Alarms and Noise Makers as well as a section on the 556, 558 and 559 timers.

BP82: ELECTRONIC PROJECTS USING SOLAR CELLS $7.75
A book of simple circuits which have applications in and around the home and that are designed to be powered by the energy of the sun. Although, if the reader wishes, they could be powered by ordinary button cells or batteries.

See order form in this issue.

BABANI BOOKS

BP49: POPULAR ELECTRONIC PROJECTS $7.75
R.A. PENFOLD
Includes a collection of the most popular types of circuits and projects which, we feel sure, will provide a number of designs to interest most electronics constructors. The projects selected cover a very wide range and are divided into four basic types: Radio Projects, Audio Projects, Household Projects and Test Equipment.

BP94: ELECTRONIC PROJECTS FOR CARS AND BOATS
R.A. PENFOLD $7.60
Projects, fifteen in all, which use a 12V supply are the basis of this book. Included are projects on Windscreen Wiper Control, Courtesy Light Delay, Battery Monitor, Cassette Power Supply, Lights Timer, Vehicle Immobiliser, Gas and Smoke Alarm, Depth Warning and Shaver Inverter.

BP95: MODEL RAILWAY PROJECTS $7.60
Electronic projects for model railways are fairly recent and have made possible an amazing degree of realism. The projects covered include controllers, signals and sound effects. Stripboard layouts are provided for each project.

BP93: ELECTRONIC TIMER PROJECTS $7.60
F.G. RAYER
Windscreen wiper delay, darkroom timer and metronome projects are included. Some of the more complex circuits are made up from simpler sub-circuits which are dealt with individually.

BP113: 30 Solderless Breadboard Projects-Book 2
R.A. Penfold $8.85
A companion to BP107. Describes a variety of projects that can be built on plug-in breadboards using CMOS logic IC's. Each project contains a schematic, parts list and operational notes.

BP104: Electronic Science Projects
Owen Bishop $8.85
Contains 12 electronic projects with a strong scientific flavour. Includes Simple Colour Temperature Meter, Infra-Red Laser, Electronic clock regulated by a resonating spring, a 'Scope with a solid state display, pH meter and electrocardiograph.

BP110: HOW TO GET YOUR ELECTRONIC PROJECTS WORKING $7.60
R.A. PENFOLD
We have all built circuits from magazines and books only to find that they did not work correctly, or at all, when first switched on. The aim of this book is to help the reader overcome just these problems by indicating how and where to start looking for many of the common faults that can occur when building up projects.

BP84: DIGITAL IC PROJECTS $7.60
F.G. RAYER, T.Eng.(CEI),Assoc.IERE
This book contains both simple and more advanced projects and it is hoped that these will be found of help to the reader developing a knowledge of the workings of digital circuits. To help the newcomer to the hobby the author has included a number of board layouts and wiring diagrams. Also the more ambitious projects can be built and tested section by section and this should help avoid or correct faults that could otherwise be troublesome. An ideal book for both beginner and more advanced enthusiast alike.

BP67: COUNTER DRIVER AND NUMERAL DISPLAY PROJECTS $7.05
F.G. RAYER, T.Eng.(CEI), Assoc. IERE
Numeral indicating devices have come very much to the forefront in recent years and will, undoubtedly, find increasing applications in all sorts of equipment. With present day integrated circuits, it is easy to count, divide and display numerically the electrical pulses obtained from a great range of driver circuits.

In this book many applications and projects using various types of numeral displays, popular counter and driver IC's etc. are considered.

BP99: MINI – MATRIX BOARD PROJECTS $7.60
R.A. PENFOLD
Twenty useful projects which can all be built on a 24 x 10 hole matrix board with copper strips. Includes Doorbuzzer, Low-voltage Alarm, AM Radio, Signal Generator, Projector Timer, Guitar Headphone Amp, Transistor Checker and more.

BP103: MULTI-CIRCUIT BOARD PROJECTS $7.60
R.A. PENFOLD
This book allows the reader to build 21 fairly simple electronic projects, all of which may be constructed on the same printed circuit board. Wherever possible, the same components have been used in each design so that with a relatively small number of components and hence low cost, it is possible to make any one of the projects or by re-using the components and P.C.B. all of the projects.

BP107: 30 SOLDERLESS BREADBOARD PROJECTS – BOOK 1 $8.85
R.A. PENFOLD
A "Solderless Breadboard" is simply a special board on which electronic circuits can be built and tested. The components used are just plugged in and unplugged as desired. The 30 projects featured in this book have been specially designed to be built on a "Verobloc" breadboard. Wherever possible the components used are common to several projects, hence with only a modest number of reasonably inexpensive components it is possible to build, in turn, every project shown.

BP106: MODERN OP-AMP PROJECTS $7.60
R.A. PENFOLD
Features a wide range of constructional projects which make use of op-amps including low-noise, low distortion, ultra-high input impedance, high slew-rate and high output current types.

CIRCUITS

How to Design Electronic Projects
BP127 $8.95
Although information on standard circuit blocks is available, there is less information on combing these circuit parts together. This title does just that. Practical examples are used and each is analysed to show what each does and how to apply this to other designs.

Audio Amplifier Construction
BP122 $8.95
A wide circuits is given, from low noise microphone and tape head preamps to a 100W MOSFET type. There is also the circuit for 12V bridge amp giving 18W. Circuit board or stripboard layout are included. Most of the circuits are well within the capabilities for even those with limited experience.

BP80: POPULAR ELECTRONIC CIRCUITS – BOOK 1 $7.75
R.A. PENFOLD
Another book by the very popular author, Mr. R.A. Penfold, who has designed and developed a large number of various circuits. These are grouped under the following general headings; Audio Circuits, Radio Circuits, Test Gear Circuits, Music Project Circuits, Household Project Circuits and Miscellaneous Circuits.

BP98: POPULAR ELECTRONIC CIRCUITS, BOOK 2 $8.85
R.A. PENFOLD
70 plus circuits based on modern components aimed at those with some experience.

BP39: 50 (FET) FIELD EFFECT TRANSISTOR PROJECTS $6.75
F.G. RAYER, T.Eng.(CEI),Assoc.IERE
Field effect transistors (FETs), find application in a wide variety of circuits. The projects described here include radio frequency amplifiers and converters, test equipment and receiver aids, tuners, receivers, mixers and tone controls, as well as various miscellaneous devices which are useful in the home.

This book contains something of particular interest for every class of enthusiast – short wave listener, radio amateur, experimenter or audio devotee.

BP87: SIMPLE L.E.D. CIRCUITS $5.40
R.N. SOAR
Since it first appeared in 1977, Mr. R.N. Soar's book has proved very popular. The author has developed a further range of circuits and these are included in Book 2. Projects include a Transistor Tester, Various Voltage Regulators, Testers and so on.

BP24: 50 PROJECTS USING IC 741 $6.75
A unique book containing 52 different projects that can be simply constructed using the 741 op amp and a few components. Originally published in Germany, this book will be an valuable asset to any hobbyist.

BP88: HOW TO USE OP AMPS $8.85
E.A. PARR
A designer's guide covering several op amps, serving as a source book of circuits and a reference book for design calculations. The approach has been made as non-mathematical as possible.

BP65: SINGLE IC PROJECTS $6.05
R.A.PENFOLD
There is now a vast range of ICs available to the amateur market, the majority of which are not necessarily designed for use in a single application and can offer unlimited possibilities. All the projects contained in this book are simple to construct and are based on a single IC. A few projects employ one or two transistors in addition to an IC but in most cases the IC is the only active device used.

223: 50 PROJECTS USING IC CA3130 $5.00
R.A.PENFOLD
In this book, the author has designed and developed a number of interesting and useful projects which are divided into five general categories: I – Audio Projects II – R.F. Projects III – Test Equipment IV – Household Projects V – Miscellaneous Projects.

BP117: PRACTICAL ELECTRONIC BUILDING BLOCKS BOOK 1 $7.60
Virtually any electronic circuit will be found to consist of a number of distinct stages when analysed. Some circuits inevitably have unusual stages using specialised circuitry, but in most cases circuits are built up from building blocks of standard types.

This book is designed to aid electronics enthusiasts who like to experiment with circuits and produce their own projects rather than simply follow published project designs.

The circuits for a number of useful building blocks are included in this book. Where relevant, details of how to change the parameters of each circuit are given so that they can easily be modified to suit individual requirements.

BP102: THE 6809 COMPANION $7.60
Written for machine language programmers who want to expand their knowledge of microprocessors. Outlines history, architecture, addressing modes, and the instruction set of the 6809 microprocessor. The book also covers such topics as converting programs from the 6800, program style, and specifics of 6809 hardware and software availability.

BP118: PRACTICAL ELECTRONIC BUILDING BLOCKS - Book 2
R.A. PENFOLD $7.60
This sequel to BP117 is written to help the reader create and experiment with his own circuits by combining standard type circuit building blocks. Circuits concerned with generating signals were covered in Book 1, this one deals with processing signals. Amplifiers and filters account for most of the book but comparators, Schmitt triggers and other circuits are covered.

BP24: 50 PROJECTS USING IC741 $6.75
RUDI & UWE REDMER
This book, originally published in Germany by TOPP, has achieved phenomenal sales on the Continent and Babani decided, in view of the fact that the integrated circuit used in this book is inexpensive to buy, to make this unique book available to the English speaking reader. Translated from the original German with copious notes, data and circuitry, a "must" for everyone whatever their interest in electronics.

BP83: VMOS PROJECTS $7.70
R.A. PENFOLD
Although modern bipolar power transistors give excellent results in a wide range of applications, they are not without their drawbacks or limitations. This book will primarily be concerned with VMOS power FETs although power MOSFETs will be dealt with in the chapter on audio circuits. A number of varied and interesting projects are covered under the main headings of: Audio Circuits, Sound Generator Circuits, DC Control Circuits and Signal Control Circuits.

RADIO AND COMMUNICATIONS

BP96: CB PROJECTS $7.60
R.A. PENFOLD
Projects include speech processor, aerial booster, cordless mike, aerial and harmonic filters, field strength meter, power supply, CB receiver and more.

222: SOLID STATE SHORT WAVE RECEIVERS FOR BEGINNERS $7.60
R.A. PENFOLD
In this book, R.A. Penfold has designed and developed several modern solid state short wave receiver circuits that will give a fairly high level of performance, despite the fact that they use only relatively few and inexpensive components.

BP91: AN INTRODUCTION TO RADIO DXing $7.60
This book is divided into two main sections one to amateur band reception, the other to broadcast bands. Advice is given to suitable equipment and techniques. A number of related constructional projects are described.

BP105: AERIAL PROJECTS $7.60
R.A. PENFOLD
The subject of aerials is vast but in this book the author has considered practical designs including active, loop and ferrite aerials, which give good performances and are reasonably simple and inexpensive to build. The complex theory and math of aerial design are avoided.

Timed NICAD Charger

Extend the capacity and life of your nicad batteries by optimizing the charge.

By Robert Card

NICAD batteries are an increasingly popular replacement for dry cell batteries. Their one disadvantage is that you have to have a special charging unit, and although relatively cheap units are available, they have the drawback that they don't have any facility for timing. Timing the length of charge is important; overcharging can actually reduce the capacity of the battery.

The unit described here avoids this problem by providing a timed charging interval after which it switches off the current and flashes a ready light.

The way the circuit works is shown in the block diagram. It is quite difficult to generate a low frequency accurately, so the first section generates a relatively high frequency, 5KHz or higher, and then uses a binary counter to divide this down by 16384 to give a frequency of about 0.3Hz. This section is the clock generator, and its frequency is set by the value of Rx.

The next section, divide and stop, is another binary counter but one which turns itself off when it reaches its maximum count. The output from this stage goes to the control logic, which turns off the constant current generator and flashes the indicator light.

The final section is the constant current generator; this provides a constant current to the battery regardless of the voltage across the battery's terminals. This is the usual way of charging nicads, and has the advantage that several batteries can be put in series and charged at the same time. The magnitude of the charging current is set by selecting one of the resistors using the switch shown. This is necessary because different battery sizes require different charging currents.

Other sections are: the power supply, which converts the 115VAC to 15VDC, the GO switch, which, when off, resets the divide and stop function and holds off the charging current and indicator light, and the indicator lights with drivers Q1 and Q2.

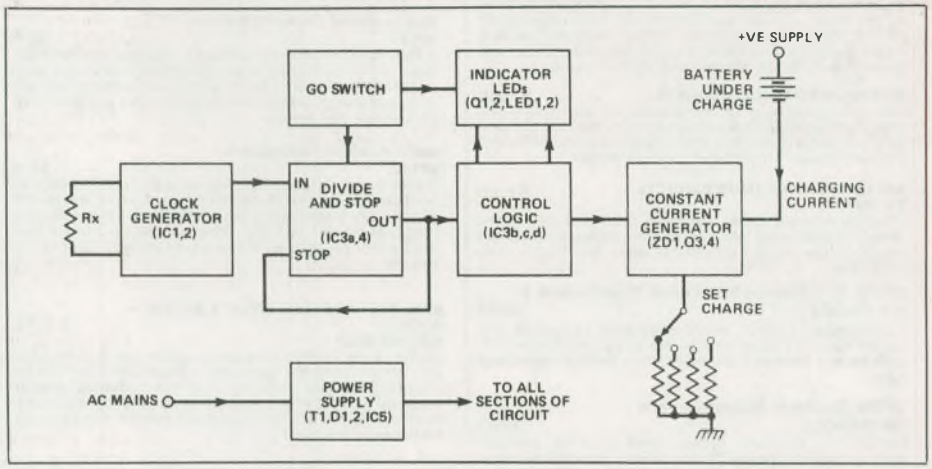

Fig. 1 The block diagram. Several batteries can be charged in series. There are limitations.

Choosing and Setting

Nicads have capacities usually measured in milliamp-hours (mAH) or amp-hours (AH). In theory, a battery with a capacity of 1AH could deliver a current of one amp for one hour, but in practice it doesn't work this way; the battery's voltage tails off as it runs down. There is also some energy dissipated in the battery's internal resistance. Nonetheless, the capacity is a guide to how much charging is necessary.

Generally, nicads prefer reasonably long charging periods, say ten hours, and for this Rx should be 33K. Other periods are possible: Rx is equal to 3456T - 1350 where T is the required charge time in hours. Table 1 shows some charge times if you don't trust your math.

Actually, choosing ten hours makes the choice of charging current much easier, so we recommend sticking to this. Note that some batteries can be charged at a very high rate, requiring a much shorter period.

The next step is to work out the charging current: this is the battery's capacity divided by the charging time. A 1AH battery for ten hours would be a 100 mA charge.

The value of Ry sets the charging current, and unless you only use one type of battery you'll find it useful to use a switch, SW3, to select different values of Ry according to **Table 2**. If none of these values suit you, you can work out the value of Ry from the equation Ry = 2.5/I, where I is the required current in amps, and Ry is in ohms.

To prevent overcharging, be sure that the batteries are discharged before charging them. A fully charged nicad has a lower voltage than standard cells, about 1.2V compared to about 1.5V. This may make them unsuitable for certain applications.

One final point on this section is that a switch, S1, can be used to select the full divide chain, or miss off the final divider stage by taking the output from pin 2 rather than pin 3. This latter option halves the timing period.

The output from this section is passed to IC3d, and this gates the output from the divide and stop section and gates it with the GO switch. As long as both these signals are low, the output of IC3d is high, which keeps the constant current

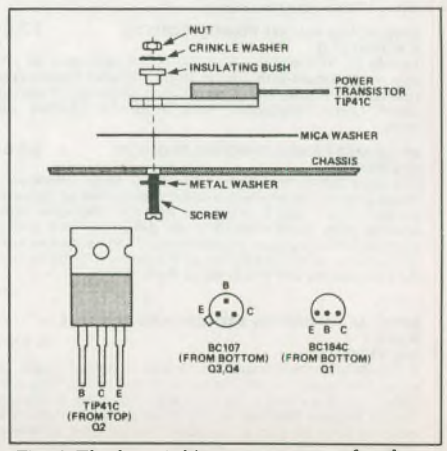

Fig. 2 The heatsinking arrangement for the power transistor, plus connection details for the other transistor types.

You can't go outside any more without being inundated with advertisements for computers. In fact, even staying inside won't help very much, unless you unplug the TV and the radio and threaten the postman with violence so he'll stay away. Computers are becoming as much a part of our culture as are TV, cars and central heating. In five years, computer illiteracy may be as much of a handicap as print illiteracy was five years ago.

Despite the colourful advertisements that have turned up in the media for computer hardware, micros are still understandably forbidding for many people. In fact, though, most new computer owners are amazed at just how small the leap from unpacking the thing, to getting it to do what they want it to do really is.

A computer is an everything tool. It can do anything you can conceive of having it do, limited only by your own ingenuity in telling it how. This is the art of programming, an experience not unlike that of an artist with every colour of paint imaginable and a blank canvas the size of Australia. However, the canvas of a computer never gets full . . . the more you learn how to do, the more you'll realize it is possible to tackle.

Computing Now! magazine can be the most useful accessory you can buy for your system. Every issue is stuffed full of news about products which will enhance your system, programs to run on it, ideas and applications to give you new things to do with your machine, articles about programming techniques, and tricks to make your computer a better tool for realizing your ideas, and piles of other features to help you get the most out of your system.

Whether you are looking at a computer as a hobby or to run your business, **Computing Now!** can provide you with information and applications to make your system the most useful thing you've ever bought next to the can opener. The articles in **CN!** are written by people who are using computers daily, and are among the most experienced small computer users in the country.

Computing Now! is published and wholly owned in Canada. As such, the articles and advertisements in it relate specifically to products you can get North of the border. There is nothing more frustrating that finding something interesting in an American magazine, only to discover that it will take four months to drag it through customs.

We know microcomputers and we practise what we preach — in fact, we are probably one of the most computerized companies in Canada. Here are just some of the systems we currently own: Apple II and compatibles (15 systems); Apple Macintosh; IBM PC and compatibles (BEST; Corona, Columbia, JLS); Nelma Persona (2); TRS-80 Model II (2); Commodore 64; Vic-20; Commodore PET; ZX81; if800; Acorn Atom; Multiflex. These are just some of the systems we own and use ourselves; our contributing editor's systems are additional to this list.

With powerful computers becoming widely available, you can't afford not to be aware of the expanding universe of micros **Computing Now!** can provide you with an understandable, incisive and varied insight into this powerful new technology. It is written to be both understandable by the beginner and informative for the more experienced user with a depth and variety unequalled by any other contemporary computer publication.

Recent articles: Local Area Networks ● Hexes and How to Throw Them ● Interrupts on the IBM ● Review of Three IBM Clones ● Bandit (a game) ● What is MS-DOS? ● Rescuing Lost Data on the 64 ● Backing Up Protected Disks ● Stockboy (an inventory control program) ● Computer Aided Drawing ● Survey of Portables ● Infomart ● Digging up CP/M ● Drum Card Review for the Apple ● Review of the HP 150 ● Hacking Modem7 ● How to Use the Smartmodem ● CP/M MAC Macro Assembler ● Popular Business Software Directory ● Explaining the IBM Serial Interface ● Directory of Microcomputer Paraphernalia ● Xerox Service Centres ● CN!'s Most Asked Questions ● dBASE II Report Generator ● Dimension 68000 Review ● Review of Radio Shack's 2000 ● IBM Telecommunications ● Business On Line ● A Potful of BASIC Routines ●

SAVE UP TO 51%

To: Computing Now! Subscriptions, Moorshead Publications, 25 Overlea Blvd., Suite 601, Toronto, Ontario, M4H 1B1 (416) 423-3262

YES, I want to subscribe to Computing Now! **I understand that I may cancel my subscription at any time and receive a refund on the unexpired portion.**

☐ **Please send me a full year** of Computing Now! (12 issues) at the special rate of $22.95, a **41%** saving off the newsstand rate.

☐ I would prefer **two years** (24 issues) at $34.95, a saving of **51%** from the newsstand rate.

☐ Cheque/Money Order enclosed ☐ Visa ☐ MasterCard ☐ Am. Exp

Card No _____ Expiry Date _____

Name _____

Address _____

City _____

Province _____ Post Code _____ FL 01/85

continued on page 28

Table 1 Charging Times And Resistor Values

Time (hours)	Rx
1	2k1 (or 2k2)
2	5k6
5	16k (or 15k)
10	33k
14	47k
20	68k

Table 2 Battery Capacities And Charging Currents

Battery capacity (mAH)	Charging Current for 10hr charge (mA)	Ry value (ohms)	Ry power (watts)
110	11	230 (or 220)	¼
200	20	125 (or 120)	¼
500	50	50 (or 47)	¼
1AH	200	25 (or 24)	½
4AH	400	6.25 (or 4.7 + 1.8)	2

generator on. If either the counter output or the output from the circuit around SW2a goes high, the output from IC3d goes high. SW2a also controls the input to the rest of the divide and stop section, pin 11 of IC4; opening SW2a takes this input high and resets all the stages of the divider IC.

The CCG

The output of IC3d goes to the constant current generator (CCG). This uses the fact that transistors have a relatively constant voltage between base and emitter. If we hold the base voltage constant by means of a Zener regulator diode, the emitter will also be held at this voltage (less the B-E drop). Now any resistor from the emitter to ground will have a constant current through it (because of the constant voltage), and this current flows through the collector circuit. If we place the load (in this case, the battery) from the collector to the power supply, it has a constant current through it. This current can be changed by varying the emitter resistor.

In this circuit, Q3 and Q4 form a Darlington amplifier; Q3 is used to reduce the control current into the base of Q4 and prevent loading of IC3d, a CMOS gate.

A limitation of the circuit is that since there has to be a volt or two between Q3's collector and its base, plus 3V9 for the Zener diode, the maximum output voltage is limited to about 10 volts. This means that a maximum of about six cells can be charged in series, less for some types of cells.

The indicator drivers are formed from IC3. IC3c keeps IC3b off while the input to IC3c from the divide and stop is low. This means that the output for IC3c will be high, holding IC3b off, until the divide and stop output goes high. From then on, when the other input to to IC3b from the clock generator goes low, IC3b can turn on and illuminate LED 2 via Q1. When the clock generator goes high, IC3b is turned off, switching off the LED. As the line oscillates between high and low, LED 2 will flash.

The overall effect of this circuit is as follows: while charging is taking place,

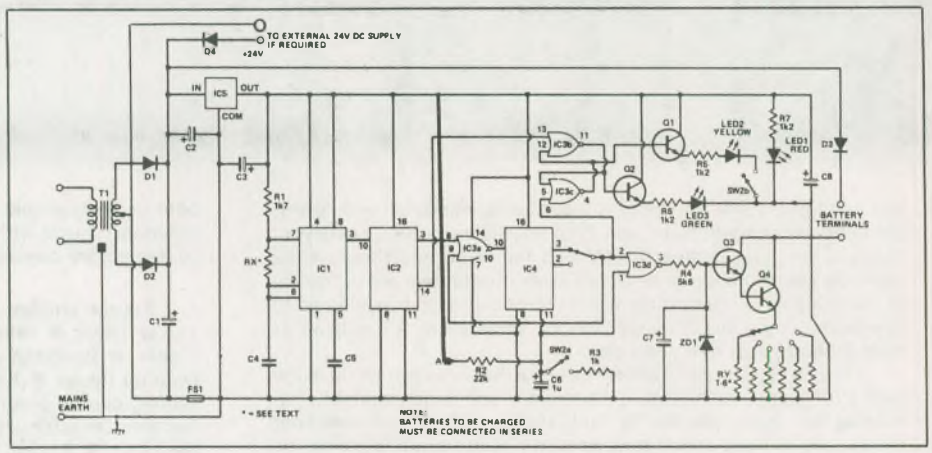

Fig. 3 The Circuit.

Fig. 4 The PCB overlay. Assembly is straightforward, but observe the usual safety precautions in fitting and grounding the power connections and transformer.

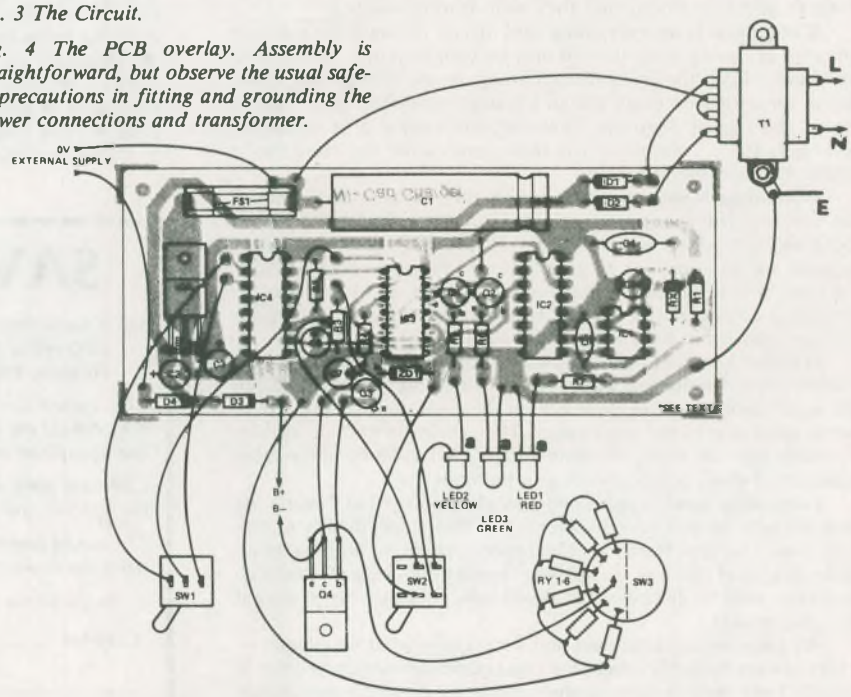

LED 3 will be on, driven by Q2 from the output of IC3c. When the charging period is finished, this turns off and LED 2 will flash. Moving the GO switch to OFF turns off LED 2 via SW2b. LED 1 is on all the time as a pilot light.

More Workings

IC1, a 555 timer, is configured as a continuous oscillator with the frequency set by C4 and Rx. The output at pin 3 is sent to IC2, a 14-stage binary counter which divides by 16384. This divided output at pin 3 comprises the output of the clock generator section. The output from IC2 pin 14 is taken from part way along the divider chain; it's the 555 signal divided by 1024, and this is used to pulse the "charge finished" LED.

The divide and stop section is based

continued on page 28

Train for the Fastest Growing Job Skill in North America

Only NRI teaches you to service and repair all computers as you build your own 16-bit IBM-compatible micro

As computers move into offices and homes by the millions, the demand for trained computer service technicians surges forward. The Department of Labor estimates that computer service jobs will actually *double* in the next ten years—a faster growth than any other occupation.

Total System Training

As an NRI student, you'll get total hands-on training as you actually build your own Sanyo MBC-550-2 computer from the keyboard up. Only a person who knows *all* the underlying fundamentals can cope with *all* the significant brands of computers. And as an NRI graduate, you'll possess the up-to-the-minute combination of theory and practical experience that will lead you to success on the job.

You learn at your own convenience, in your own home, at your own comfortable pace. Without classroom pressures, without rigid night-school schedules, without wasted time. Your own personal NRI instructor and NRI's complete technical staff will answer your questions, give you guidance and special help whenever you may need it.

NRI is the only home study school that trains you as you assemble a top-brand micro-computer. After building your own logic probe, you'll assemble the "intelligent" keyboard . . .

Your NRI Course Includes a Sanyo MBC-550-2 Computer with 128K RAM, Monitor, Disk Drive, and "Intelligent" Keyboard; The NRI Discovery Lab®, Teaching Circuit Design and Operations; a Digital Multimeter; Bundled Spread Sheet and Word Processing Software Worth $1500 at Retail—and More.

The Exciting Sanyo MBC-550-2—Yours To Keep

Critics hail the new Sanyo as the "most intriguing" of all the IBM-PC compatible computers. It uses the same 8088 microprocessor as the IBM-PC and the MS/DOS operating system. So, you'll be able to choose thousands of off-the-shelf software programs to run on your completed Sanyo.

As you build the Sanyo from the keyboard up, you'll perform demonstrations and experiments that will give you a total mastery of computer operations and servicing techniques. You'll do programming in BASIC language. You'll prepare interfaces for peripherals such as printers and joysticks. Using utility programs, you'll check out 8088 functioning. NRI's easy step-by-step directions will guide you all the way right into one of today's fastest growing fields as a computer service technician. And the entire system, including all the bundled software and extensive data manuals, is yours to keep as part of your training.

. . . then install the computer power supply, checking all the circuits and connections with NRI's Digital Multimeter. From there you'll move on to install the disk drive and monitor.

100-Page Free Catalog Tells More

Send the postage-paid reply card today for NRI's big 100-page color catalog, which gives you all the facts about NRI training in Microcomputers, Robotics, Data Communications, TV/Video/Audio Servicing, and other growing high-tech career fields. If the card is missing write to NRI at the address below.

NRI SCHOOLS
McGraw-Hill Continuing Education Center
330 Progress Avenue
Scarborough, Ontario M1P 2Z5
or telephone 416-293-8787

We'll give you tomorrow.

IBM is a Registered Trademark of International Business Machine Corporation.

MTHS-80 Interface

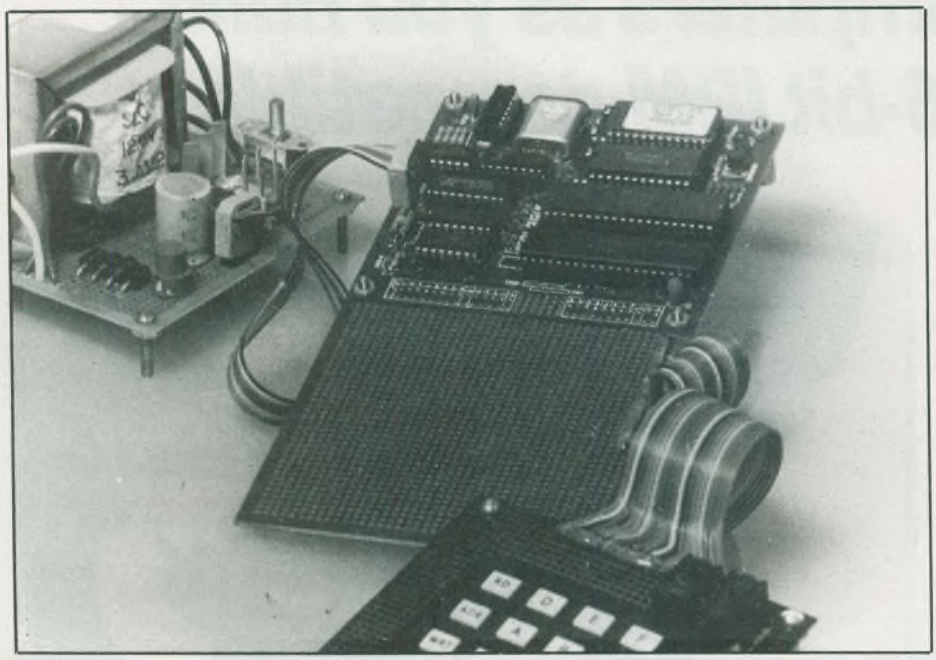

The HS-80 circuit board with the MTHS-80 ROM. The 5V supply is at right, and a keypad (foreground) has been wired in for entering codes.

A Z80 controller that makes an intelligent interface; use it as a stand-alone or as part of a system.

By E. Penn

LISTEN, I bought a printer at a surplus store for $29.95 and the guy said "Sure it'll print with your computer, man, no sweat, we sell a million of 'em, here's your change." Good deal.

Of course it didn't work and it just sat like a bump on a log, didn't it, except for the letter "A" which made it spool the paper out onto the floor. Hosed again. I'm told that the code used by the printer doesn't correspond with the computer's ASCII and a translator is needed.

Now I've been handed this PCB and a chip and a manual and all, I'm told, is not lost. The package comes from Nicologix, of Streetsville, Ontario, and an interesting package it is, too. What you get, actually, is a printed circuit about 8 by 4 inches with lots of room on it for a CPU and support chips, plus an area of uncommitted pads where you can stick the circuit of your dreams. This circuit can be wire-wrapped or soldered, what with space being provided for your choice of connectors.

The entire point of this, the very essence, is that you now have a Z80A CPU that's crystal-controlled at 3.57MHz and has a buffered data bus, two I/O ports via a Z80-PIO, and software in ROM. There's also 2k of static RAM which can be expanded to 8k. This gives the hardware hacker the ability to noodle out all sorts of designs without opening up the old Apple clone and disturbing its cantankerous, precarious innards.

This little gadget is known as the HS-80 system, and will solve problems for you such as building a translator for a cheap printer that doesn't speak your computer's language. All you need is a power supply that can let it have five volts and at least 300mA. Plus, of course, the manual, which, although not a designer's coursebook, covers the layout, as well as the operation, of the HS-80, superbly. Love them commas.

The bare PCB sets you back $20, not a bad bite for quality double-sided stuff, and the nifty manual another $5.00. The parts you'll need are the garden variety stuff like a CPU and gates; the only weird part is the Z80-PIO port chip, and Z80 CPU dealers should carry it.

If you're really into this by now, and desperate to make that printer work, for another $40 you can get the MTHS multi-tasking software on a ROM chip plus another manual. This manual is even thicker and better than the first, and explains in detail the simple assembler-style language for turning the board into an intelligent interface. You'll note in the photo that the board has a small keyboard and 7-segment readout attached; a few simple codes and we had the board beeping a beeper while leaving the CPU free for other tasks. Some of those other tasks would be making a printer buffer or smart EPROM programmer or smart keyboard encoder or a terminal controller or a parallel-serial converter or even, bless 'em, a printer driver.

The uses for this little intelligent breadboard are - dare I say it? - limited

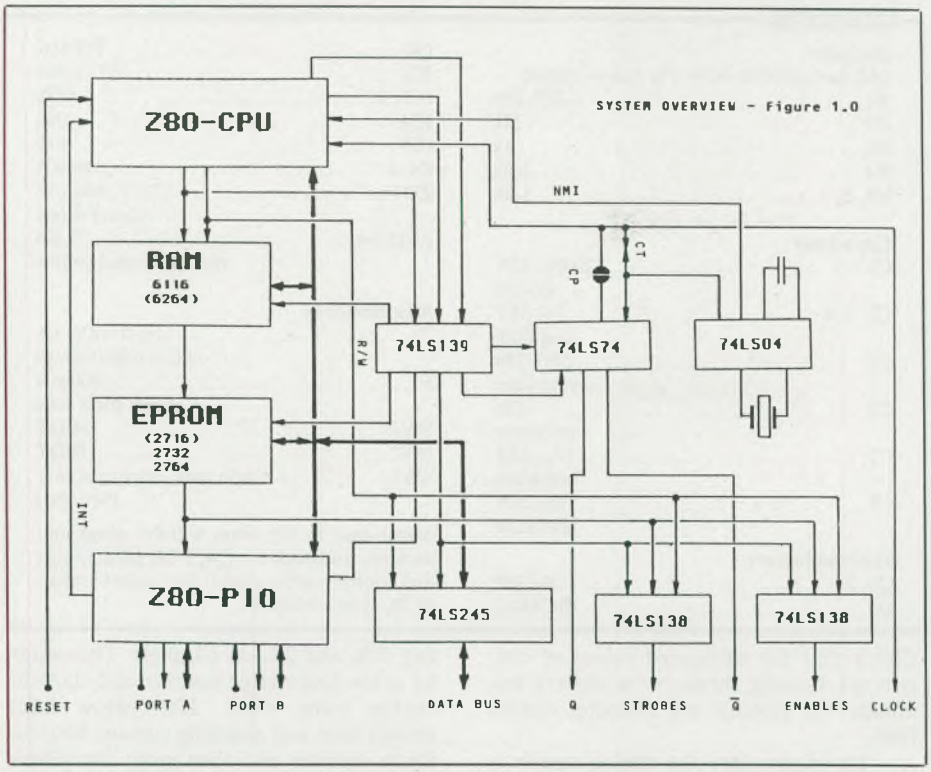

Fig. 1 The block diagram of the HS-80 hardware; the MTHS multi-tasking system is added via the ROM chip.

```
                .
                .
          LD    A,PAGE
          LD    HL,PROCESS
          HS80  F$AREPL
          JR    C,ERROR
                .
                .
ERROR:    EQU   $
                .
                .
```

Fig. 2 An example from the manual showing the simple code used in the MTHS system. ■

only by your imagination. After you've decided to get some use out of your home computer by making it run the household appliances and the robot, this little board can do it all for you and prevent tying up your home computer and now you're back where you started trying to find a use for the old Atari. Maybe you could program it to write song lyrics – they'll probably be better than most of the stuff around now. Developing one-time circuits no longer means a custom PCB or a tangly breadboard. Software for the board can be developed on an Apple or IBM.

Least I lead anyone astray with raving on here, this board is not an instant solution to your interface problems; Nicologix assumes that you have a working knowledge of the CPU and its support chips, and that you understand the wants and needs of the circuits you're trying to interface.

But assuming you're good at logic circuits, this little card should save you no end of time and trouble when you're inventing your concoctions. I should have that printer interfaced to my wristwatch in no time. It's available at Exceltronix, 319 College St., Toronto, (416) 921-8941, or contact:

Nicologix,
PO Box 976,
Streetsville, Ontario
L5M 2C5

We Service What We Sell
BEST QUALITY INSTRUMENTS AT LOWEST COST!
Why Pay More? . . . Just a Few Examples:

DMM 601
3½ dig. 0.25% acc.
0.1 mV - 1000 VDC
0.1 uA - 2 A AC/DC
0.1 mV - 750 VAC
0.1 ohm - 20 M ohms
Safety test leads incl.
$63.90

Dmm 6010 (same as 601) except: max. 10 A AC/DC **$69.50**

OSCILLOSCOPE 505 - 1 Chan.
4.5mHZ bandwith
20 mV vert. sensitivity
Internal sinewave calibrator
(probe extra)
Introductory Price **$300.00**

OSCILLOSCOPE 33330 - 2 Chan.

20mHz bandwidth
Built-in components tester
5 mV vert. sensitivity
Special Price $495.00 in areas not served by distributers. Probes extra.

Model 605 RF Generator
100KHz - 70 mHz On fundamentals
Introductory price **$179.00**

Precision Analog Multimeter Model 5050E
• Input resistance, 10M Ω /DC
• 43 measuring ranges
• AC/DC current max. 12A
Introductory Price **$67.50**

Authorized Distributors: A-1 Electronics, 5062 Dundas St. W. Toronto, 231-4331.
Waterloo Electronics Supply Co. In. 219 Hartwood Ave., Waterloo, Ont. 745-9421.
Mail Orders Accepted: Certified Cheque, Money Order, C.O.D.'s F.O.B. Oakville. Ontario residents add 7% P.S.T.

KB ELECTRONICS
355 Iroquois Shore Rd., Oakville, Ont. L6H 1M3
(416) 842-6888 Telex 06-982396 (KBEL OKVL)

continued from page 24

on IC4, another 14-stage counter. To reach the counter, the clock pulses have to pass through a NOR gate, IC3a. While the other input to this gate, from the output of the binary counter, is low, pulses from the clock generator can pass, although they are inverted by the gate. Once the other input to the gate goes high, the output of the gate will go low whatever the clock generator output is doing, so no further pulses pass to IC4. Otherwise, IC4 would carry on counting and eventually turn on the CCG via the control logic.

Construction

The prototype was built in a metal box with the PCB mounted on plastic pillars. The power transistor, Q4, becomes quite hot when fully loaded. This has to dissipate up to 20 watts, so it will require a heatsink. This can be achieved by bolting Q4 to the bottom of the box, using a suitable insulator and heatsink compound on both sides of the insulator.

Testing

The voltage across C1 should be 18 to 25 volts and the red LED should be illuminated. The voltage across ZD1 should be zero when SW2 is OFF, and about 3.9V in the ON position. The yellow LED should illuminate in the ON position.

PARTS LIST

Resistors
(All carbon film ¼W 5% unless noted)
R1 ..... 2k7, 2%
R2 ..... 22k
R3 ..... 1k
R4 ..... 5.6k
R5, 6, 7 ..... 1.2k

Capacitors
C1 ..... 2200u, 25V electro
C2, 3, 6 ..... 1u, 35V tantalum
C4 ..... 5n6, 2% polyestyrene
C5 ..... 22n polyester
C7 ..... 47u, 6V3 tantalum
C8 ..... 10u, 25V tantalum

Semiconductors
Q1, 2 ..... BC107
Q3 ..... BC184C
Q4 ..... TIP41C
IC1 ..... 555 timer
IC2, 3 4020
IC4 4001
IC5 7815
D1-4 ..... IN4001
ZD1 ..... 3.9V, 400mW Zener diode
LED 1-4 ..... 0.2in red, green and yellow

Miscellaneous
T1 ..... 18-0-18V, 1A mains transformer
F1 ..... 800mA quick blow fuse
SW1 ..... SPDT
SW2 ..... DPDT
SW3 ..... single pole, six way rotary (See text)

Metal case to fit; 4mm wander plugs and sockets; heat sink for Q4; PCB pillars, nuts and bolts; cable gland for mains cable; PCB, wire, solder etc.

Check that the calculated values of current are flowing through the battery terminals by placing an ammeter across them.

To ensure that the timing circuit is working without having to wait for the full charge time, calculate a value for Rx so that the time is one hour, for example (try 47K and 2K2 in parallel). The switch S1 to the half charge position and start the charge using SW2. The yellow LED should light and charging current flow for thirty minutes and then stop; the yellow LED goes off and the green one flashes to indicate a charge. Now replace Rx with the proper value.

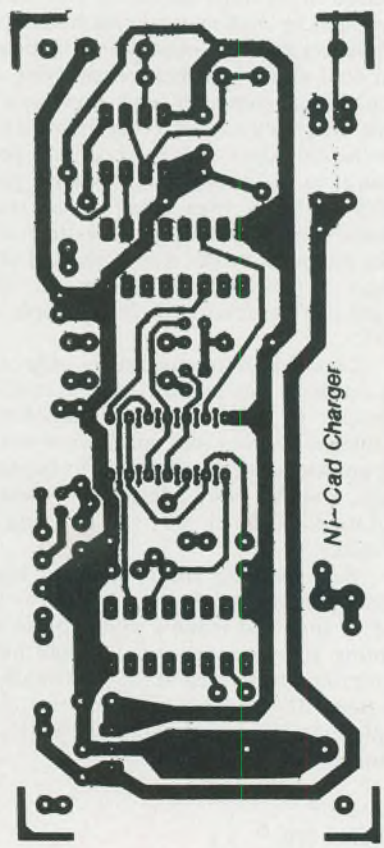

Supercomputers

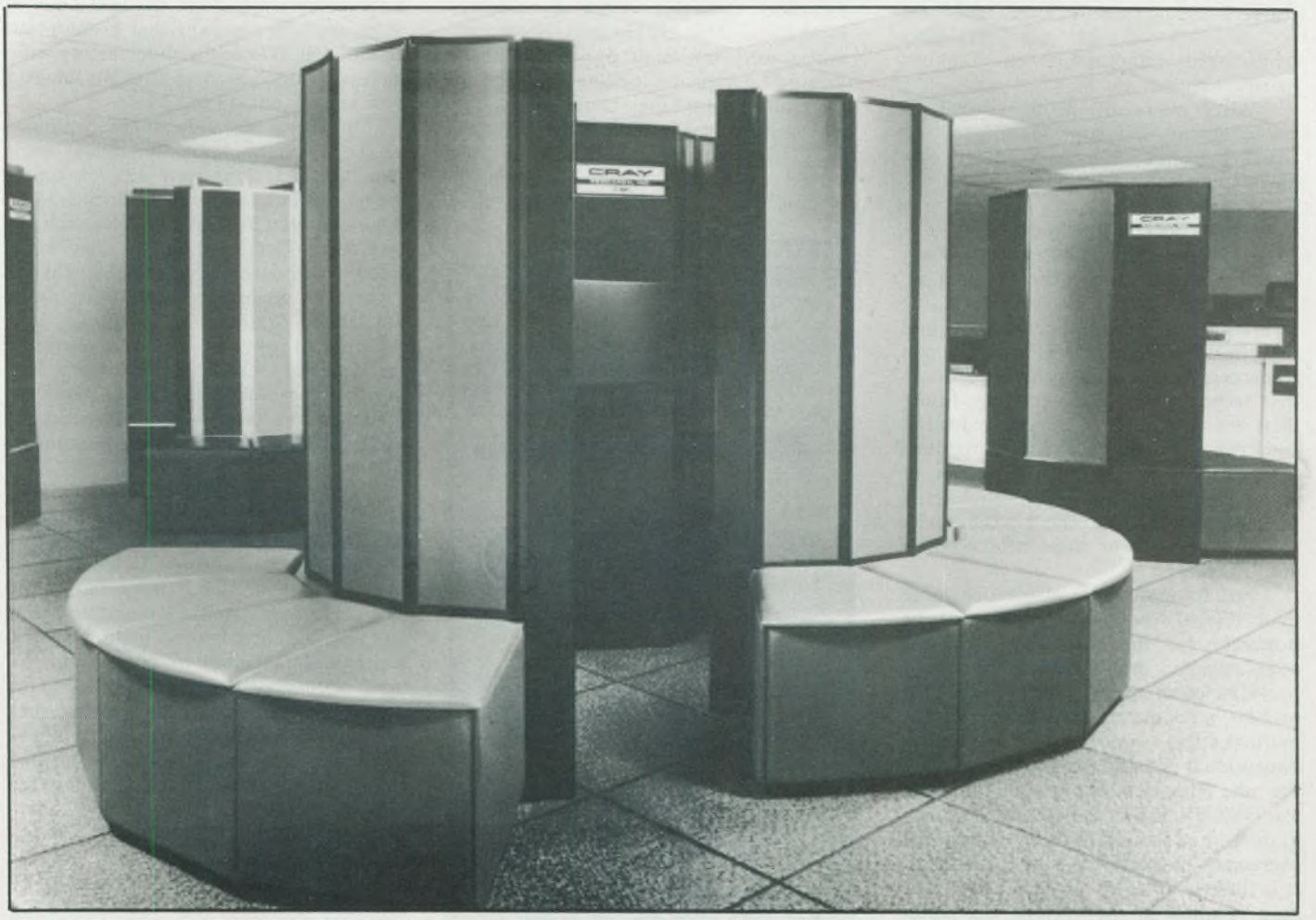

The Cray X-MP series of supercomputers is among the most powerful available today. Photo courtesy of Cray Canada Inc.

Ultra-highspeed computers can run at 400 million operations per second, and the small market is turning into a US/Japan sweepstakes.

By Gene Gregory

WHEN the Japanese National Superspeed Computer Project got under way in January, 1982, few would have believed that just three years later it would be among the highest priority items on the US-Japan diplomatic agenda discussed by President Ronald Reagan and Prime Minister Yasuhiro Nakasone at their California summit.

At the time of their meeting in January, 1985, there were still scarcely more than 130 supercomputers in operation worldwide. Less than ten of these had been built by Japanese computer makers, and virtually all the rest were products of two American firms, Cray Research, Inc., and Control Data Corporation (CDC), a duopoly which had dominated world markets since the first ultra-highspeed number crunchers were built at the beginning of the 1970s. About 70% of the supercomputers then in operation were supplied by Cray Research.

The immediate problem which had been raised at earlier technical meetings between representatives of the two countries was access to Japanese markets, particularly universities. But in the background loomed a larger issue: the Japanese supercomputer project, not to be confused with the Fifth Generation Computer Project intended to develop artificial intelligence, had set for its specific objectives the design of machines with a sustained execution rate of about 10 billion floating-point operations per second (gigaflops), or 100 times faster than American computers and ten times faster than the projected peak speed of the next generation of American machines.

Gigaflops

The measure of computing speed, the Flop, refers to the binary version of representing scientific notation, in which a number is represented by a mantissa between 0.1 and 1 raised to an exact power of ten. A single Flop is arithmetic between two floating point operands to get a floating point result.

Speed in the 10-gigaflop range would be attained by using entirely new semiconductor devices, distributed parallel-

processing architecture, one billion bytes (a gigabyte) of memory and a memory bandwidth of 1.5 gigabytes per second. To meet these specifications, the Scientific Computer Research Association was established, combining six leading integrated circuit manufacturers under the coordination of the national Electrotechnical Laboratories in Tsukuba Science City.

After years of being virtually a one-company industry (dominated by Cray), the market was teeming with new players, projects and funding.

The Japanese Approach

Japanese policymakers had unequivocally acted on the premise that the wealth of nations will be largely determined in the future by information technology, and that, in the absence of other than human resources, Japan is more dependent on that technology for its economic future than are most other advanced industrial countries. New generations of computers will therefore serve as the prime movers in an increasing range of industries, helping to improve efficiency where productivity has in the past been little influenced by automation.

But computers are also much more than critical tools; they will also be necessary for the management of the ecosystem and dealing with a myriad of problems of an ageing society, processing massive amounts of data to aid in the mathematical simulations of multi-dimensional physical phenomena. Here is the rub. What in a techno-economic context is vital to the security of Japan is seen in the United States as a threat to national supremacy in critical military technology. It is these conflicting interests, then, that have resulted in the current US-Japan confrontation. Japanese leaders have made clear their intentions to push forward the state of the art in supercomputing as well as Fifth Generation technology. The intention is not only to assure the competitive strength of Japanese industry and the wealth of the nation, but to contribute to the forward march of human progress.

However, the Japanese do not see their action as replacing US dominance in supercomputers, or as a threat to US security; given the high technological level of the Japanese electronics industry, the development of supercomputer production capability is seen rather as a natural course of open worldwide competition.

Japanese computer makers take seriously the expressed confidence of Cray executives that they will be able to match Japanese advances in supercomputers; the existing park of Cray supercomputers constitutes a formidable advantage in the competitive marketplace. There are also few illusions among Japanese leaders that they will be able to penetrate the US government market, which has accounted for the bulk of supercomputer sales in the past.

Strategies

Japanese strategies differ significantly from those of the US pioneers. Supercomputers were not built by IBM, but by "dwarf" companies looking for niches in the market where they could survive unmolested by the Big Blue. When Seymour Cray left Control Data, which he had helped create but later found to be unable or unwilling to sustain a commitment to supercomputers, he originally intended to build only one of his projected giant number crunchers a year for scientific purposes. He saw no great market for the machines, and even after favourable response from the Los Alamos National Laboratory which took the first Cray in 1976, the new company that began in an abandoned Wisconsin shoe factory only increased production to four machines a year in 1978 and 13 in 1984.

In 1982, when Japanese computer makers announced their imminent entry into the field, there were only 50 supercomputers in operation worldwide. 35 of these had been built by Cray Research, 14 by Control Data, and one by Denelcor, a small Colorado builder. Fully 38 of those superspeed computers were operating in the United States for Los Alamos and government agencies. It was a restricted market, for which the builders had developed special machines that were programmed in a completely different manner from standard general-purpose mainframes.

The new Japanese entrants, Fujitsu, Hitachi and NEC, are major highly-integrated companies producing a full line of computers from micros to mainframes, and are at the same time among the world's top ten computer manufacturers. Not only did these makers build their new superspeed machines to operate on the same software used by their standard mainframe models, but this meant that both Fujitsu and Hitachi would supply machines compatible with mainframe models built by IBM, which had not so far given any sign that it would add supercomputers to its product line. By producing IBM-compatible machines, Fujitsu and Hitachi offer the widest number of computer users at home and abroad the option of moving to more powerful machines without heavy expenditures for time and money for adapting special software.

The Need

The global strategies of Japanese makers are based on other elements that have not weighed as heavily in plans and operations of Americans.

Firms in a widening range of high-technology industries are beginning to feel the need of ultrafast computer processing capabilities. Advanced graphics, computer-aided design, and distribution systems all require massive volumes of data, necessitating a processing improvement of two to three orders of magnitude during the current decade.

Supercomputer development is itself linked with the design of Very Large Scale Integrated circuits. They require devices with increasingly faster switching speeds, speeds which can be obtained only by developing entirely new technology.

Supercomputer Primer

Supercomputer: A computer which can process data at 20 megaflops or higher, but the fastest run at a sustained 400 megaflops and a peak of 1 gigaflop or higher. In future, supercomputers may use multidimensional arrays with many parallel operations being performed in a pipelined way. Over the last 30 years, computer speed has tended to double each year.

Flops: Floating point operations, a measure of computer speed. An operation is arithmetic performed on two floating point operands to get a floating point result. A megaflop is one million operations per second, and a gigaflop is one billion.

Scalar Processing: Operating on individual data elements with instructions that yield one result for each instruction. To operate on all elements of an array, for instance, the computer loops through the table of numbers, repeating the same instructions on each.

Vector Processing: Uses only one instruction to perform calculations on an array of data all in one operation. In supercomputers, the more data vectorized, the faster the operation. Vector processing is usually not available on mainframes.

Array Processing: Does not include scalar processing. Processors are usually peripheral devices, allowing mainframe users to run vectorized portions of programs.

Parallel Processing: Two or more processors performing simultaneous operations in a single task. Supercomputers may use vector processors in tandem with scalar processors, dividing each task for optimal use of the processors under central control; they may or not be pipelined.

Pipelining: Speeding computer operations by breaking down instructions into discrete steps for processing in an assembly-line system, with different steps in the execution of an instruction performed simultaneously. Vector registers, or high-speed memories, store instructions and feed them to the pipeline at a speed greater than calling instructions from the main memory.

By effectively responding to worldwide demand, Japanese makers see the possibility of cutting prices sharply; industrial users are likely to be more sensitive to lower prices.

The Near Future

Supercomputers still occupy the niche that first generation computers held in the 1950s. Those earlier machines cost even more, allowing for inflation, and were so powerful that only a very special group of users could find applications for them. Yet in the US there were 13 computer manufacturers, with Remington Rand in the lead.

By comparison, the worldwide supercomputer park at the beginning of 1985 had reached 130, with only nine installations in Japan. By 1990, it is estimated that at least 100 will be operating in Japan, about the same number installed worldwide in 1984. World market estimates for 1990 vary widely from 400-500 machines to as many as 1000. Not surprisingly, the higher estimates of demand come from the Japanese, who are aiming at a broader range of users.

The Machines

Fujitsu has concluded arrangements with the Amdahl Corporation, in which it holds a 49 percent equity, to market its supercomputers in North America and Europe. Initial benchmark tests in the US indicate that sustained throughput, consisting of both CPU and input/output speed, of the Amdahl 1100 and 1200 (identical to the Fujitsu VP-100 and VP-200) compares favourably with the competition. The 1100 sustains speeds of 175 megaflops and the 1200 300 megaflops. The 1100, in sustained throughput, is 1-2 times faster than the Cray X-MP uniprocessor and twice as fast as the two-pipeline Control Data Cyber 205, while the 1200 is about as fast as the Cray top-of-the-line X-MP two-way processor.

While some computer scientists discount the advantage of IBM compatibility, pointing out that if a customer is prepared to vectorize the scalar software code, the same results can be obtained on a Cray with an IBM up front, others assert that programs developed from the start for vector processing on supercomputers will run 20 to 30 times better than scaler converted to vector.

Hitachi has followed the Fujitsu strategy, supplying National Semiconductor's subsidiary, National Advanced Systems (NAS), on an OEM basis. In 1982, Hitachi introduced the two-model S-810 series, one with speeds up to 630 megaflops, and the other rated at 315 megaflops. In Europe, Hitachi-made supercomputers are being offered by NAS, Olivetti and BASF as vector processing extensions of Hitachi-built mainframes.

NEC is following a different strategy. While its new SX series is compatible with NEC mainframes, neither are IBM-compatible. "IBM architecture is 20 years old," NEC manager Akihiro Iwayo points out. "To assure IBM-compatibility some performance compromises are necessary, which NEC chooses to avoid." As a result, NEC surpasses both Hitachi and Fujitsu, unveiling machines with operating speeds up to 1.3 gigaflops, or ten times the speed of the Cray 1S and twice as fast as the X-MP two-way processor, which has a peak 630 megaflop throughput.

Architecture

Both NEC machines, the SX-1 and SX-2, feature logic LSI with a density of 1000 gates per chip and delay times of only 250 picoseconds. The SX system utilizes unique, high-density packaging with 36 LSI chips mounted on a substrate 10 cm square, achieving higher speeds due to shorter pathlength. Cooling, which is a critical factor in supercomputer design, is a direct liquid system within the LSI packages, but the cooling unit itself is air cooled and needs no special equipment. High speed main memory elements with a maximum data supply rate of 11 gigabytes per second is supplemented by an extended memory, offering significantly higher performance than obtainable with magnetic disks.

The architecture of the world's first giga-level machine is based on multiple parallel processing using four sets of four vector pipelines, enabling a maximum of 16 parallel vector operations to be performed simultaneously. Although the SX-2 is ten times faster than the Cray 1S, the price is substantially the same.

Both Fujitsu and NEC use an advanced type of Fortran 77, a compiler that can vectorize standard Fortran programs. Since 20 to 80 percent of Fortran programs can be vectorized, this approach in the main software issues will likely prove advantageous, since no special operator training would be required.

The Future

The six Japanese semiconductor manufacturers have joined in the National Superspeed Computer Project. The goal is to produce a computer capable of sustained processing speeds of at least 10 gigaflops by 1989, one year before the completion of the separate Fifth Generation project.

The super-cooled Josephson junction, developed in 1983, is unlikely to be selected for supercomputers; despite its 7 picosecond delay, it requires special packaging and maintainence, and must be operated at a temperature near absolute zero. Much more likely are gallium arsenide (GaAs) devices. Jointly developed by the project, it features high speed, low power consumption, and a large number of gates.

From 1985 to 1989 the focus will be on development of the actual supercomputer, stepping up work on distributed parallel processing architecture and related software. What will happen after 1990 is anyone's guess. Chances are good that by 1990 the three Japanese supercomputer makers will have as high as 50 percent of the world market, likely to be at $2 billion a year and climbing. The US will not be standing still; Cray will remain a major power in the marketplace for the foreseeable future, and IBM may enter the market as it reaches volumes approaching $2 billion. National projects in the UK, France and Germany will probably bring new actors onto the scene. It remains to be seen whether any future inventions will emerge to bring about a significant departure from the revolution.

Dr. Gene Gregory is a professor of business at Sophia University in Tokyo.

AMAZING

SCIENTIFIC and ELECTRONIC

DEVICES

LASER DEVICES
- LC5 BURNING CUTTING C02 LASER $15.00
- RUB3 RUBY LASER RAY PISTOL 15.00
- LRG3 IR LASER RIFLE/PISTOL 10.00
- LGU3 VISIBLE RED LASER RIFLE 10.00
- LHP/LLD LASER LIGHT XMTR/RCVR SYS .. 10.00
- LHC2 BEGINNER simulated VISIBLE LASER . 5.00

SCIENTIFIC & ELECT
- TCL3 SOLID STATE TESLA COIL 35KV 6.00
- BTC3 250 THOUSAND VOLT TESLA COIL 9.00
- BTC5 1.5 MILLION VOLT TESLA COIL 15.00
- HVM3 125 THOUSAND VOLT DC SUPPLY 8.00
- IOG3 ION RAY FORCE FIELD GUN 8.00
- HEG1 MILLION WATT 500 JOULE SOURCE .. 10.00

ULTRASONIC ACCOUSTICAL
- PPF1 PHASOR PAIN FIELD GENERATOR .. 15.00
- PSP3 PHASOR SHOCK WAVE PISTOL 7.00
- IPG5 POCKET PAIN FIELD GENERATOR 7.00
- RAT2 RAT AND PEST ELIMINATOR 6.00
- HT9 HIGH FREQ. LISTENING DEVICE 8.00

SECURITY & PROTECTION
- DEVI DEVASTATING DEVICES 10.00
- PPG1 PHASOR PROPERTY GUARD 15.00
- MFT1 MINI VOICE XMTR 2-3 MILE 7.00
- INF1 INFINITY TRANSMITTER 15.00
- PSW3 PHASOR BURNING STUN WAND 7.00
- ITMI INTIMIDATOR PLASMA GUN 10.00

WE STOCK ALL PARTS NECESSARY FOR CONSTRUCTION OF THE ABOVE PROJECTS

• **CATALOG** CONTAINING **HUNDREDS** MORE OF ALL **NEW AMAZING** and **FASCINATING** PLANS. EASY TO BUILD KITS AND ASSEMBLED ITEMS $1.00. CATALOG INCLUDED **FREE** WITH ANY OF THE ABOVE PROJECT PLANS. SEND CASH, CHECK, MO, VISA, MC IN US FUNDS.

INFORMATION UNLIMITED

P.O. Box 716, DEPT. ET, AMHERST, NH 03031

Circle No. 32 on Reader Service Card

Satellite Rec

Direct reception of satellite relays means an enormous choice of video and audio programs; buy a complete system or build your own.

By Bill Markwick

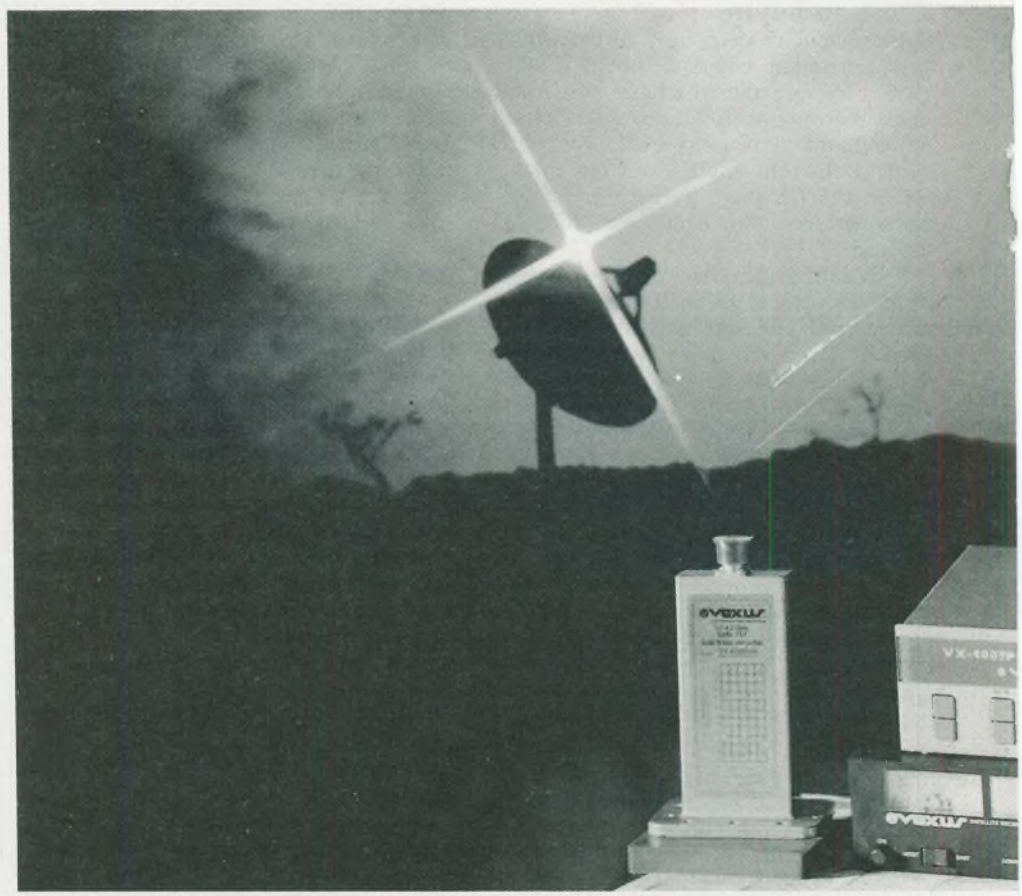

IF you'd like a wider choice of programs, or if you live in an area where cable is not available, you can receive the broadcasts from satellites that are used to relay network programming across the continent. You might expect the received signal to be feeble, and it is; you might also expect that some sophisticated hardware is required, and that's true as well. It's a bit more complicated and expensive than the average rooftop antenna, but the popularity of the systems is bringing prices down. You can also build your own; various companies supply kits and assistance.

The Basic Idea

Networks use satellites as relay links; if you have sensitive enough equipment, you can receive and decode the satellite signal. This obviously lets you in on a wealth of commercial-free programming.

The catch is that the signal is understandably small; the satellite may cover most of Canada using a transmitter with about ten watts of power. In addition, the signal is in the microwave region; satellites receive the ground signal at about 6 gigaHertz and rebroadcast it at about 4GHz (for audio fans who feel that the universe ends at 20kHz, a gig is 1000 megaHertz). There are some regional broadcasts from Canada's Anik that use the 14/12 gig band.

A whole lot of signal has to be collected with a parabolic reflector eight or ten feet in diameter. The signal is concentrated into a *feedhorn* which guides it into the low noise microwave amplifier, or LNA, which has about 40–50dB of gain. As you can imagine, a 4 gig signal isn't too easy to handle, particularly with long cable runs, so it's immediately sent to the *downconverter* to be changed to a band of frequencies surrounding 70MHz. This is sent by coaxial cable to the receiver unit indoors. The receiver extracts the particular station you want and sends the RF signal to your TV.

Nothing to it, except maybe cost and a big dish sitting in your backyard.

The Options

Just like buying a car. The jazzier receivers have microprocessors in them to eliminate knob-twiddling and simplify changing channels. There are remote control units to run the receivers; these are similar to the familiar cable-TV handheld remotes. Some receivers have stereo decoding for audio signals.

Because the satellite signal is so small, it's necessary to aim the dish accurately when changing to another satellite, and you may not fancy going out in the cold and wet to do this manually. There are lots of actuators available. It's a servomotor that rotates the dish on its mount under control of a microprocessor that sits near the receiver. Some just move the dish until your picture looks good, and the more expensive ones can be preprogrammed with satellite locations.

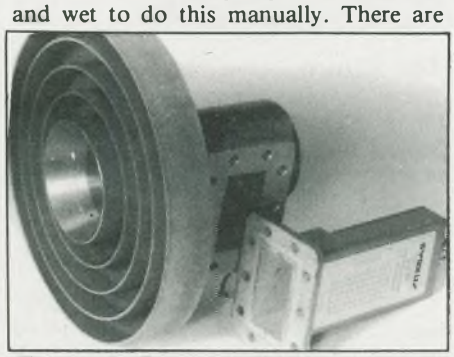

Fig. 1 A feedhorn assembly which guides the signal into the Low Noise Amplifier shown with it; equipment courtesy of Vexus Telecommunications.

The number of bells and whistles naturally send the price up rapidly, so it all depends on how much you want done by gadgetry and how much you're willing to do by hand. One place where you probably shouldn't scrimp is in the dish and mount; a large dish is subject to immense wind loading, and even if it doesn't blow over, it may be easily knocked off optimum positioning.

There are lots of dealers around now who can advise you on complete systems that can be made to work right away. But for those of you with a sense of adventure, how about building your own? You *do* have a sense of adventure, don't you?

An Adventure

One of the most costly items in a satellite reception system is the dish. If you're reasonably good at basic carpentry and

eption

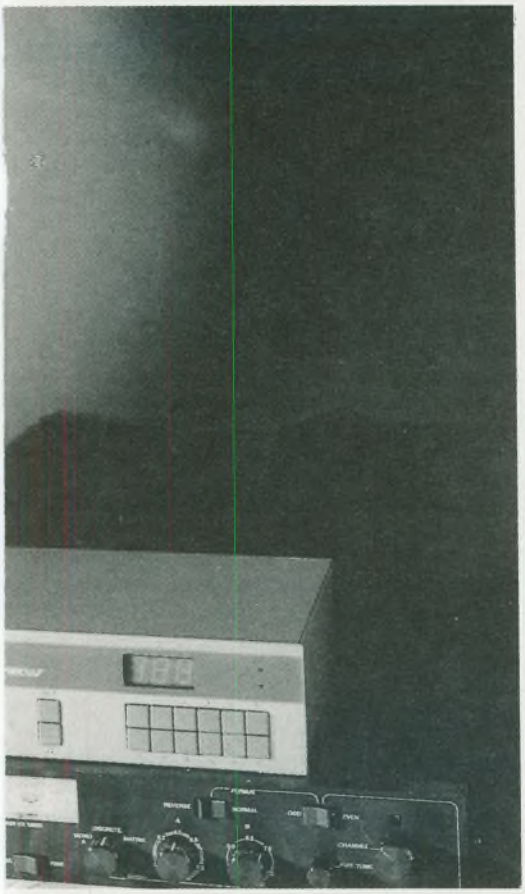

can either do welding or get it done somewhere, Sothis Satellite Systems of New Brunswick will send you an instruction manual and blueprints for a dish that you can make yourself. It's rectangular rather than round ("spheribolic"), and is constructed largely from plywood ribs covered with mesh; the mount is made from angle iron. Its final size is 8 feet; its gain is said to be 36dB and its efficiency 68 percent. Studio-quality reception is claimed. In addition, the see-through mesh has a better look than a solid dish, and it's also more tolerant of wind loading.

We obtained a copy of the instructions and blueprints and found them to be well-written. There's a large blueprint for the wooden frame and another for the mount; both include comprehensive parts lists. Mind you, there's one spec I bet it can't live up to: it's claimed that the antenna can be assembled in four hours. Obviously the Sothis company has never seen me at work; I decided to renovate my house two years ago, and today it's still a patchwork of holes, plaster, drywall bits, and pink insulation. Now that I have the plans, maybe I'll have a go at building my own dish; I'll let you know how it turned out by early 1996.

If you're itching to get at the power saw, the manual and drawings can be had by sending a money order or bank draft for $24.95 to:

Sothis Satellite Systems,
Box 6637, Station A,
Saint John, New Brunswick
E2L 4S1

Electronics

Having assembled your dish, you may want to mop your brow and just head down to the satellite store for all the rest of the stuff. On the other hand, that thrill of accomplishment may make you want to go whole hog and take a stab at building the electronics, which will mean a Low Noise Amplifier and a receiver unit.

If this appeals to you, *Electronics Today* published a do-it-yourself project for the LNA, the downconverter and the receiver, written by Ron D.C. Coles and appearing in July and August, 1983 (back issues are available; see the Order Form in this issue).

This project is not for the faint of heart. The signal presented to the LNA by even a large dish is typically only 6dB above the thermal noise that exists in all circuits courtesy of Mother Nature. It's readily apparent that any amplification has to be done by gain stages which add an absolute minimum amount of their own noise. The usual choice is cascaded GaAsFETs mounted on a special microwave-grade PCB; the project features plans for this type of amplifier, which has a noise figure of 1.5dB. Noise performance for LNAs is usually given in degrees Kelvin; 1.5dB corresponds to 120 degrees. Better performance than this is possible, but the exotic techniques required will mean an exotic price tag.

If you're a bit nervous about building circuits that whiz along at 4GHz, and after all, the known universe *does* end at 20KHz, Ron received enough feedback from the article that he has now started a company to assist the constructor as well as supply complete systems. He can solve supply problems for you; some of the high-frequency components aren't available at your local Radio Shack, to say the least. So, if you're game, contact:
Colesat Systems,
RR 2,
Tantallon,
Nova Scotia B0J 3J0
(902) 826-2875

Other Features

Radio stations use satellite services as well; there are stereo stations available on subcarriers from most satellite transmissions. Some specialize in particular types of music. Needless to say, you need a receiver with the necessary decoding option to hear the audio subcarrier.

A question that comes to mind: why should broadcasters let you have all this commercial-free TV? There has been some talk of scrambling the transmissions, but nothing firm has emerged so far. Some of the channels have at least a few commercials on them, so it isn't in their interest to scramble, and for the others, the number of people with satellite dishes may be too few to make it worthwhile. What they worry about is someone using a dish to obtain movies and so forth for commercial purposes, but this is illegal anyway, since the Canadian Radio-television and Communications Commission rules say that you can have a dish for your own use, but you can't distribute the signal to others without a licence, and they probably won't give you a licence.

The smaller dishes are also generating some interest; nobody wants a ten-foot monster if a three-footer will work. There's the vague idea around that dishes and electronics have improved to the point where the three- and four-footers are adequate replacements for the larger dishes, but this isn't 100 percent true. A smaller dish receives a smaller signal, period. There's a limit to how good you can make the electronics, since signal-to-noise is largely controlled by the laws of physics rather than engineering. However, if you live in an area that receives a strong signal, or you're tuning in to the newer more powerful satellites, or you don't mind doing without some of

Fig. 2 An actuator and control panel for remote adjustment of the dish position.

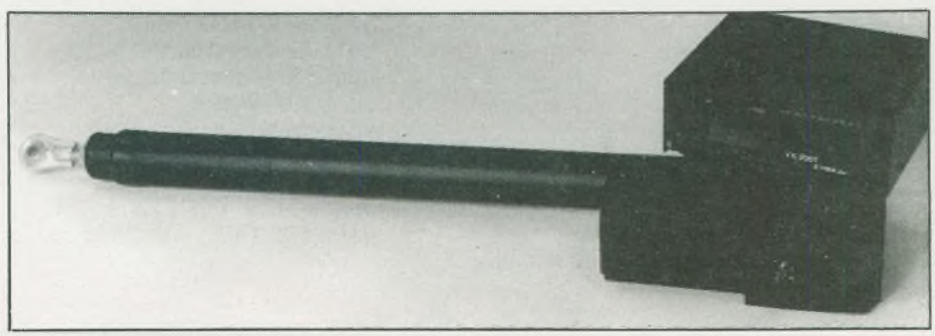

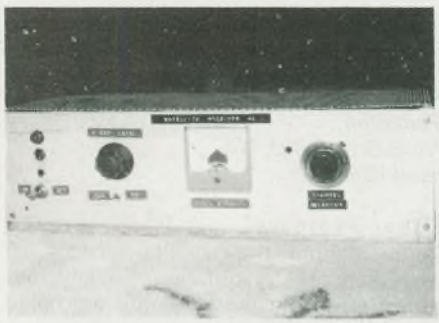

Fig. 3 The original receiver developed by R.D.C. Coles and described in one of our projects (see text).

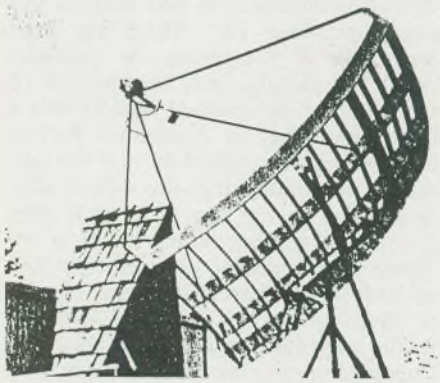

Fig. 4 A do-it-yourself dish antenna from Sothis Satellite plans.

Fig. 5 The angle iron mount from Sothis Satellite plans.

the weaker broadcasts, then the smaller dish is adequate. And, of course, a well-designed small dish beats a poorly manufactured large dish any time.

There are a number of publications around dealing with satellite reception. If you'd like a Canadian magazine, there's *SIGNAL*, from Fennwood Publishing Ltd., Box 238, Station D, Scarborough, Ontario. It's published six times yearly and available on newsstands, and deals with general aspects of satellite reception. If you'd like a more technical guide, a book stuffed full of goodies is the Satellite Experimenter's Guide, published in 1984 by the American Radio Relay League and dealing with TV-broadcast, amateur radio, and weather satellites. If you can't find it in speciality stores, you can contact them at the ARRL, 225 Main St., Newington, CT 06111. It costs $11 US.

Sources

Here are some of the manufacturers and distributors who can supply you with systems, components, and advice. Our apologies to anyone who didn't get listed through oversight.

Delta Satellite Systems,
40 Rivermede Rd. N., Unit 1,
Concord, Ont. L4K 2H3
(416) 736-0930

Sigmacom Consumer Products,
111 Industrial Drive, Unit 6
Whitby, Ontario,
(416) 666-16614

Pulsar Communications,
801A - 57 St. East,
Saskatoon, Saskatchewan
(306) 931-3090

Millman's Communications,
11427 - 160 St.,
Edmonton, Alberta
(403) 451-3127

Geocom Inc.,
13120 Bathgate Place,
Richmond, BC
(604) 273-1079

Paco Electronics Ltd.,
45 Stinson St.,
Ville St. Laurent,
Quebec H4N 2E1
(also Markham, Ont. and Winnipeg, Man.)

Gensat Communications Corp.,
951 Alness St.,
Downsview, Ont. M3J 2J1,
(416) 736-4555

MSE Systems Ltd.,
2015 West 12th Avenue,
Vancouver, BC V6J 2G3
(604) 736-1141

CSE Satellite Equipment,
200 Hamford St.,
Lachute, Que. J8H 3N8,
(514) 562-3741

Cale Communications,
693 Henderson Dr.,
Regina, Sask. S4N 6A8,
(306) 949-9181

Evolution Technology,
1155 Appleby Line,
Burlington, Ont. L7L 5H9
(416) 335-4422

Commander Satellite Systems,
309 Steeles Ave., E,
Milton, Ont. L9T 1Y2,
(416) 876-4707

Columbia Satellite Systems,
2080 - 21 St. NE,
Calgary, Alberta T2E 6S5
(403) 250-5271

Vexus Telecommunications,
2240 Argentia Rd.,
Mississauga, Ont. L5N 2X6,
(416) 821-8900

Haussen Tech Inc.,
PO Box 2126,
Moncton, NB E1C 8H7
(506) 534-2530

MISAT Corp. (Fanon),
20701 Langley Bypass, No. 4,
Langley, BC,
(604) 534-4104

Petphil Electronics Inc.,
254 St-Anne St.,
Senneville, Que. H9X 1N8
(514) 457-1N8

Communications Gigahertz Ltd.,
4649 Des Grandes Prairies,
St-Leonard, Que. H1R 1A5,
(514) 323-0030

■

DUNCAN INSTRUMENTS LTD.

ELECTRONIC INSTRUMENT SPECIALISTS
Providing the finest, state-of-the-art electronic instruments available. Backed by superior post sales service and a comprehensive 12 month warranty. Many of our products are unavailable anywhere else. Examine just a few of the many products we currently stock. Recognizable value.

121 MILVAN DRIVE
TORONTO, ONTARIO
M9L 1Z8
(416) 742-4448
TELEX: 065-27271

HIGH TECH. LOW COST.

INNOVATION. QUALITY. VALUE.

All prices include Federal Sales Tax.
In Ontario add 7% Provincial Sales Tax.
Call or write for additional information.
Telephone and mail orders invited.

MODEL **6022** $**635**^{00}

DUAL TRACE OSCILLOSCOPE

- 20 MHz bandwidth
- dual trace
- 6" CRT
- component tester
- 5 mV sensitivity
- complete with two dual probes

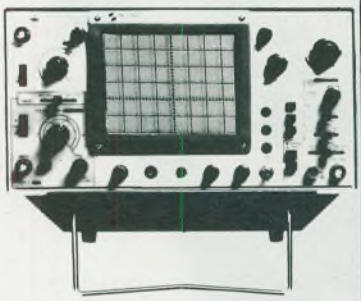

MODEL **2310B** $**395**^{00}

SINGLE TRACE OSCILLOSCOPE

- 10 MHz bandwidth
- 3" CRT
- 5 mV to 5V/Div. in 4 ranges
- test lead supplied

MODEL **8055F** $**595**^{00}

DIGITAL FREQUENCY COUNTER

- Frequency range: 1 Hz – 550 MHz/3 ranges
- Sensitivity: A: 1Hz-100MHz ≤20mV
  B: 50 MHz – 550 MHz ≤ 150 mV
- 8 digit LED display

Model 8010F: 1 Hz – 120 MHz in 2 ranges – $395.

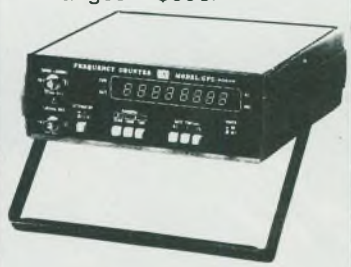

MODEL **5030** $**220**^{00}

DIGITAL MULTIMETER

- 3½ digit, 0.5" LCD display
- Diode test
- Continuity buzzer
- full AC/DC current/voltage/ohms. Ranges

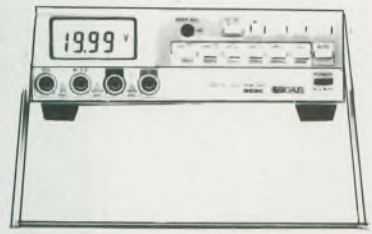

MODEL **3000** $**95**^{00}

DIGITAL MULTIMETER

- low cost handheld DMM for electronic, electrical and serious experimenter use
- 3½ digit, LCD 0.5" display
- single knob switching
- 10A AC/DC ranges
- accuracy generally 0.5%
- carry case, battery, leads included

MODEL **3100** $**85**^{00}

DIGITAL MULTIMETER

- large 5 mm LCD display
- continuity buzzer
- auto zero, auto polarity
- AC/DC volts and ohms

MODEL **8016D** $**435**^{00}

DIGITAL DISPLAY FUNCTION GENERATOR

- 0.2 Hz to 2 MHz frequency range
- Wave forms: Sine, triangle, square, pulse and ramp
- Output level: >20V p-p open circuit
- V.C.F.: 0 to 10V (1000:1)
- Frequency counter: 6-digit display

Available without digital display (Model 8015F) – $260.

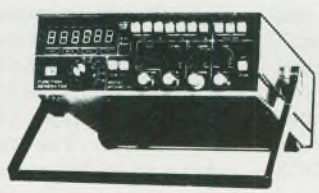

REGULATED DC POWER SUPPLIES

Power supplies designed for production line or laboratory use. They feature constant current and voltage outputs, with excellent regulation.

SINGLE OUTPUT MODELS

GPS-6010: .01% regulation, 0-60 Volts, 0-1 Amps. $**329**^{00}

GPS-3020: .01% regulation, 0-30 Volts, 0-2 Amps. $**329**^{00}

DUAL OUTPUT MODELS

GPD-6010: .02% regulation, 0-60 x 2 Volts, 0-1 x 2 Amps. $**575**^{00}

GPD-3020: .02% regulation, 0-30 x 2 Volts, 0-2 x 2 Amps. $**575**^{00}

Circle No. 33 on Reader Service Card

Commodore 16

Commodore offers a smaller version of the popular C64 for two hundred dollars, featuring 16K and a powerful BASIC.

By Bill Markwick

THE CRAZE for home computers has levelled off these days, and if you haven't bought one yet, you might be wondering about the various plastic boxes that you can just see through the settling dust cloud. The emerging standard seems to be IBM, or at least compatible MS-DOS machines, and Apple appears to be second favourite. Both of these machines and their attendant clones are still a bit pricey, and the next one down the list would be the Commodore 64. These aren't particularly expensive, but if you're still afraid that you might not be able to find to get your money's worth out of a home computer, CBM now has the model 16. It's powerful enough to do a fair amount of programming, plus cheap enough that it can gather dust in the closet without causing twinges of regret. However, it's a lot more fun to use it:

Using It

If you're familiar with the C64, you'll notice right away that the 16 is in the same case, though its power supply is a tiny plugpack instead of the large box that sits in the middle of the 64's power cord. The connector is not the 64 DIN-type, either, but the sleeve type that you find on portable radios. The rear connectors are similar to the 64, except that there are no edge connectors for the cassette port and user port; the cassette port is now a tiny circular 7-pin jack. The plastic connector remains, now labelled "memory expansion".

The right end looks about the same except for the smaller power connector and the addition of a Reset button; the two joystick ports are still there, now marked "Joy 1" and "Joy 2", which should puzzle archaeologists in the future who may wonder about the machine's intended function.

You can use either a TV set (RCA jack output, channels 3 or 4) or a monitor (DIN socket). That's about all the hardware you can get at from the outside.

On booting it up, you'll notice that the screen is 40 characters by 25 lines and that the characters are a bit different than the 64's; somewhat blockier, but very easy to read. The 64 is noticeably fuzzy when plugged into a monochrome monitor and requires eliminating the colour with POKE 53281, CRTL-2. You don't have to do this with the 16; the display is crisp and clear.

You'll also notice the message that only 12,227 bytes are available; some memory is lost to the 16's operating system. The 12k should be more than enough for most BASIC programming and for running small games; a memory expansion module plugs into the back if you'd prefer something of a safety margin.

BASIC

The 16 boots with the announcement that it contains Version 3.5 of Commodore's BASIC. Just in case you're using it with a TV set that snips off a bit of the image, you can use ESC R to reduce the display to 38 columns. Arg — get a monitor.

The included manual gives only the barest of introductions to BASIC; it rattles off a few things like PRINT and SOUND and COLOUR in a half-dozen pages. However, CBM has more advanced manuals available; presumably the idea is that most users will run ROM packs and so forth, and the minority who want to create programs will have to buy the manual.

The first BASIC function in the manual, after the usual introduction, is SOUND. SOUND 1,266,60 is the syntax, and in order, selects one of three voices (the third is white noise), the next is the pitch, and finally the duration. The note A (number 770) works out to 440.4Hz, which ought to be close enough to concert pitch to please anybody. The VOL command, from 0 to 8, sets the volume of the output. The output is, of course, a square wave, giving that familiar robotic drone. It's suitable for jazzing up your game programs.

The next tiny section deals with graphics, and these functions are certainly comprehensive. You can have the familiar block graphics marked on the front of CBM computer keys, or you can invent your own via DRAW, CIRCLE, BOX, etc.

There are 16 colours available and you can set the border, characters, and background. Again, you'll need the more advanced programming guide to take full advantage of these.

A memory expansion may well be necessary if you want to use the snappy graphics; they take about 10k of memory for themselves, leaving you with diddly for programming.

The BASIC ROM contains some upgrading compared to previous CBM versions. You'll find PRINT USING for formatting the display, AUTO for line numbering, and RENUMBER for getting rid of those odd numbering sequences that testify that you didn't program it right the first time. There's also a DO loop; this gives you about the same function as the familiar FOR-NEXT, except that it loops until a specified value occurs somewhere instead of a fixed number of iterations.

There's also a monitor, a real live machine code monitor. Type MONITOR and you can assemble and disassemble code, load and save machine language programs, edit memory, move and compare memory, and check out what's happening in the various registers. The CPU is an 8501 which is similar to a 6502 which is similar to the 6510 in the C64.

Peripherals

The first peripheral you'll want is probably some kind of storage system. Commodore offers the 1531 Datasette, the 1541 disk drive, and the 1551 disk drive. The cassette is a low-cost alternative to disks, but it's as slow as an arthritic turtle. The 1541 disk drive is only a little bit faster; you can expect one or two minutes to go by when you load a program. The manual lists a few other related CBM products: their line of printers, the 1700 series colour monitors, etc. They also mention the Commodore 16 Intermediate User'S Manual and the Series 264 Programmer's Reference Guide, manuals well worth having.

PRODUCT MART

Where Buyers Seek Sellers!

An advertising feature where companies can reach thousands of Electronics Today, Computing Now! and Software Now! readers on a nation-wide basis to sell products and services — where individuals can buy, sell, or swap hardware, software, or just information.

Look for it in this month's issues of Electronics Today, Computing Now! or Software Now! It's a classified advertising forum for readers and advertisers alike.

For advertising information call (416) 423-3262, or write:

Moorshead Publications

Suite 601, 25 Overlea Blvd.,
Toronto, Ontario M4H 1B1

Publishers of Electronics Today, Computing Now!, Software Now! and Computers in Education.

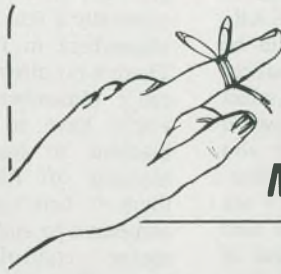

"INCREASE YOUR MEMORY WITH 64K DRAM MEMORY CHIPS"

Return this ad for your complimentary catalog

SPECIAL OF THE MONTH

Computer chips

4116	16K	150 NS	$ 1.49
4164	64K	150 NS	$ 3.39
41256	256K	150 NS	$22.95

CALL FOR QUANTITY PRICING

Books • Breadboard & Accessories • Capacitors • Chemicals • Connectors • Crystals • Plugs & Jacks • Enclosures • Fans • Filters • Fuses • Heat Shrink Tubing • Heat Sinks • Kits • Knobs • Peripherals • Probes • Opto • PCB Products • Potentiometers • Power Supplies • Relays • Resistors • Cable Assemblies Sockets

Active

YOUR ELECTRONIC COMPONENT CENTER

MAIL ORDERS PROCESSED WITHIN 24 HRS

Correspondence
P.O. Box 9100
Westborough, Mass
01581 USA
5651 Ferrier St.
Montreal Quebec
H4P 1N1 CAN.

SELF SERVE STORES

US
WESTBOROUGH MASS (617) 366-9684
BELLEVUE WASH (206) 881-8191

CANADA
MONTREAL (514) 731-7441
OTTAWA (613) 728-7900
TORONTO (416) 977-7692
DOWNSVIEW (416) 630-0400
EDMONTON (403) 438-5888
VANCOUVER (604) 438-3321
CALGARY (403) 235-5300

CAN. 1-800-361-5884
U.S. 1-800-343-0874

6EI

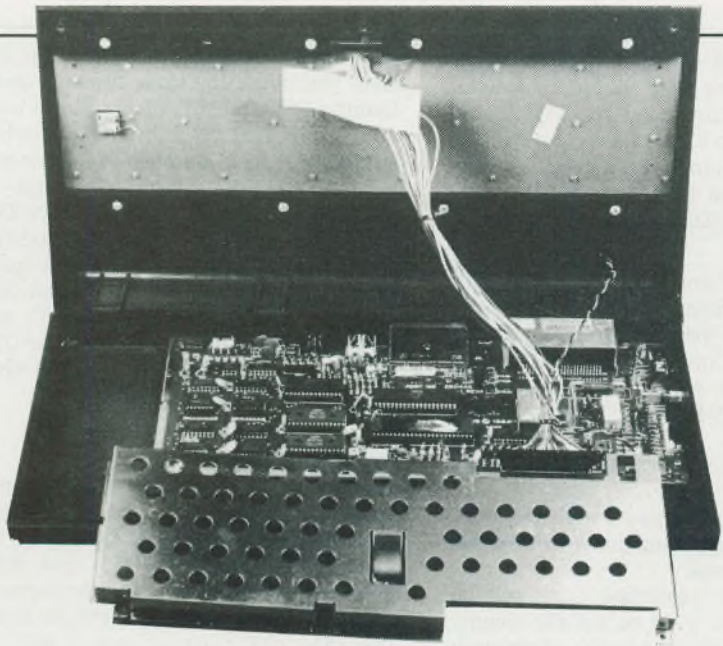

The interior of the Model 16 with the RF shield removed.

Other Features

There's a HELP key nested in with the function keys. When you encounter a syntax error, this key will write the offending line to the screen in flashing type. Not too useful, since the computer has already told you which line is wrong.

The other function keys are preprogrammed to hold GRAPHICS, DLOAD, DIRECTORY, CLEAR, DSAVE, RUN and LIST. They can be reprogrammed from BASIC to whatever else you prefer. GRAPHICS helps select the desired mode by printing the word "graphics" in a BASIC statement; you follow it with the appropriate number. DLOAD, DSAVE and DIRECTORY are for the disk operating system; they sure beat the previous Commodore system of typing in a string of symbols to list the directory or load a file.

Most of the other keyboard features of the 64 are on the model 16. Besides the large selection of graphics characters, there are the screen colour control keys, flashing and inverse video, plus Commodore's excellent cursoring and fell-screen editing.

Software

There are three possibilities here. The first is to purchase and plug in a ROM pack; on powering up, it takes over the computer and runs whatever's contained in it. Simple enough. The second is the 1531 Datasette which plugs into the rear of the computer and doesn't require any external power. This is the lowest-cost, simplest way for the beginner to load and save programs, but it's frustratingly slow, especially if you have to try and find a file somewhere in the middle of the tape. There's no directory in one place; if you can't remember the filename exactly, you'll have to wait for the cassette machine to trundle through the tape rhyming off filenames as it comes to them. If there's any advantage to the 1531 compared to audio recorders, it's that the motor is controlled by the computer and about all you have to do is press Play or Rewind as instructed.

The 1541 disk drive is the next step up; it's much faster than a cassette tape, though it's still molasses compared to an Apple or IBM drive. It also costs more than the computer, and you can't graft on another manufacturer's drive because the Commodore operating system is unique.

Compatibility

As mentioned, there's no problem with CBM peripherals such as the disk drive, and the CBM works with either a TV or a monitor, monochrome or colour. Software is another thing. The tiny memory means a different layout from its predecessors, as well as the more obvious problem that large programs simply won't fit; the owner of a 16 will have to check carefully when offered software that isn't specifically designed for it. Incidentally, the general trend in memory devices is more for less, so it's a good question why CBM sees fit to put only 16k in the computer. Maybe they want to move more expansion packs.

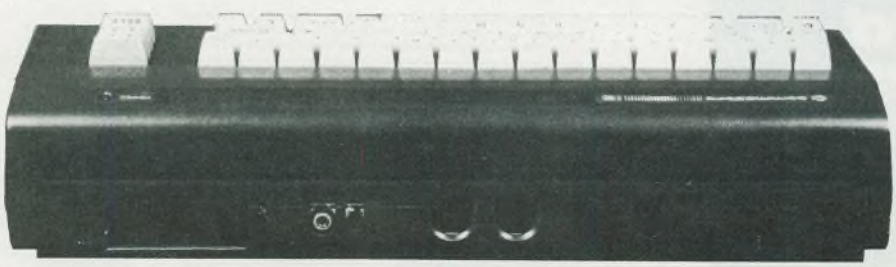

The rear of the 16 is similar to the 64, but lacks one user port.

Generally

At two hundred dollars, or even less if discounted, the 16 is a good deal, with its comprehensive BASIC and compatibility with CBM hardware. Keep in mind that you'll need a proper manual and probably a memory expansion cartridge. It isn't a machine for the serious computer addict, but it looks ideal for the beginner.

Quick Reference

Commodore 16
CPU: 8501
RAM: 16k
User RAM: 12k
Storage: optional disk, cassette
Video: 40 by 25
Audio: 3 voice music tones
Price: $199.95 ■

50 Top Projects
156 Pages **$4.95**

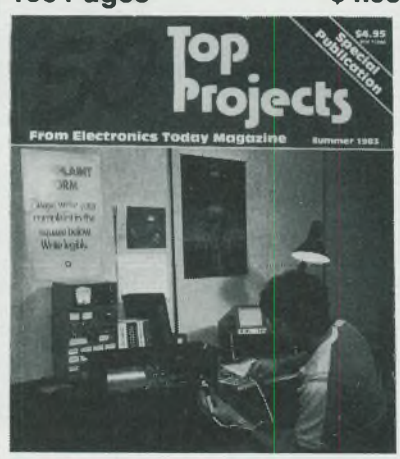

Fifty all-time best projects from ETI magazine packed into one giant 156 pages special. There are projects for the beginner to the more advanced builder, including: Semiconductor Tester, Universal Counter, LED Level Meter, AM radio, and much, much more.

ORDER TODAY FROM
Moorshead Publications, 25 Overlea Boulevard, Toronto, Ont. M4H 1B1 (416) 423-3262
Postage and Handling included.
Credit Card payment accepted

By Hagen Kornberger

Computing Today

Designing Z80 Projects, Part 1

Create practical projects with the ever-popular, low-cost Z80 CPU.

THIS SERIES takes a look at a practical approach to designing Z80 projects. Connecting ROM, RAM, and I/O ports will be discussed as well as reliable circuits to interface the Z80 CPU to the external world. First let's take a look at the Z80 CPU itself.

Z80 Inputs

The power inputs, GND and VCC, should be connected to a regulated 5V power supply such as the one shown in **Fig. 2**, utilizing the popular 7805 regulator. This power supply can be used to power TTL as well as other microprocessor chips. It is important that a 0.1uF bypass capacitor be connected across the power inputs of each VLSI chip and one for every 5 TTL chips, eliminating any sporadic failures caused by power spikes induced from the high-speed switching elements of the CPU. Also, if the power supply is mounted off the CPU board, a 10 uF electrolytic capacitor should be connected across the power inputs to the CPU board.

The master clock frequency, which can range from 1MHz to 4MHz, is connected to pin 6, the clock input. The common clock frequencies are: 2MHz for the Z80 and 4MHz for the Z80A CPUs. This clock frequency is used by the CPU as a timing reference when performing various operations. **Fig. 3** shows a reliable clock circuit that will operate in the desired range without modification.

When the power is first applied, the CPU needs a special pulse to trigger it in the right direction. This input is called the reset input. A suitable power-on reset circuit is shown in **Fig. 4** with a manual reset button included. This reset circuit can be used to drive other LSI chips requiring a reset input.

The interrupt feature allows the CPU to finish the instruction that it's doing, and then accept an instruction from another peripheral while the first one waits. The NMI and INT inputs provide the CPU with two types of interrupts. The first is a non-maskable interrupt, which means that it cannot be internally disabled by the CPU itself, whereas the second can. In addition, the INT can operate in three different modes, allowing up to 128 devices to be connected to this input. Interrupts will be further discussed later on in the series, so for now these may be tied to the 5V line via a 1K pull-up resistor.

The WAIT input allows slow I/O and memory devices to be connected to the CPU. When this line is brought to the logic zero state, extra cycles called WAIT cycles are introduced to wait for the slower chips to input or output data. Since most modern chips can accommodate a Z80 CPU at 4MHz, this line can also be tied to the 5V rail with a 1K resistor.

The final CPU input is the BUSRQ. This line, when brought to logic zero, causes the CPU to shut itself off. The address bus, data bus, and control bus are placed in the high impedance state and the

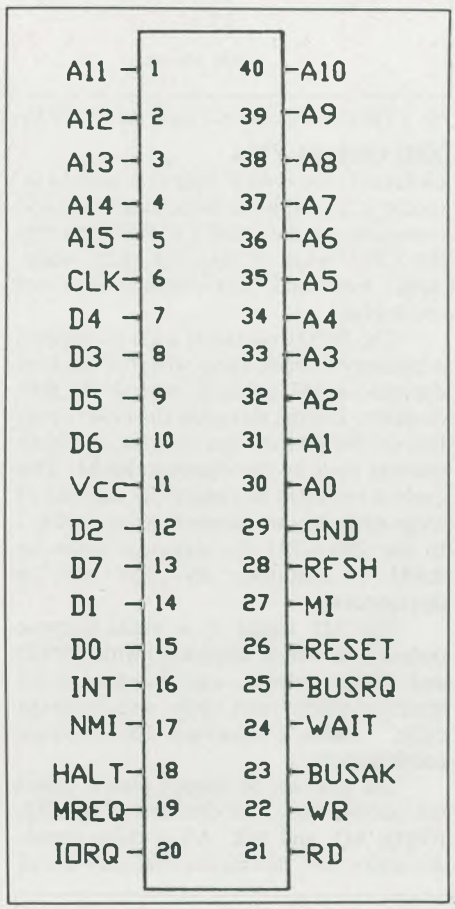

Fig. 1 Z80 CPU pinout.

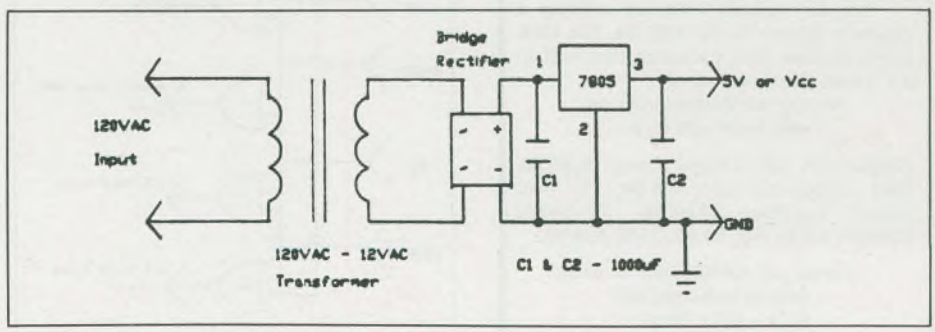

Fig. 2 5V regulated power supply.

INTRODUCING:
THE NEW STANDARD FOR IBM PC/XT COMPATIBILITY
The ACS-1000 Super Computer

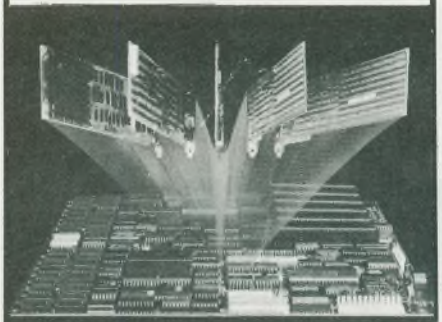

INTRODUCING:
THE NEW STANDARD FOR IBM PC/XT COMPATIBILITY
The ACS-1000 Super Computer

- 1 Megabyte On-Board Memory
- Built-in Disk Controller
  - up to 4 Floppies
  - SASI Hard Disk Interface
- 54 KB User Definable ROM
- Switchable: 4.77 or 8 MHZ
- Built-in Multifunction Board
  - Parallel Printer Port
  - 2 Serial Ports
  - Time-of-day Clock

Seize Control of Your Hardware Destiny

If you are using board level microcomputers you can have greater power, versatility and reliability by using the ACS-1000 single board SuperComputer.

The ACS-1000 is compatible with both software and hardware designed for the IBM PC/XT. It even has the same mounting holes and the same power supply connections. The difference is that the ACS-1000 offers a much higher level of integration and costs less than $600 when ordered in quantity.

Save your Expansion Slots for true expansion. Disk Controllers, I/O ports and extensive memory are already built-in, simplifing production and freeing the 6 expansion slots to take on specialized work of your process control, CAD/ CAM or office automation applications. There's even a special port for a low cost piggyback modem.

See for yourself. We are offering a system evaluation kit for $995.00. The 128K system includes bios, documentation, and an XT compatible power supply.

Special introductory offer on peripherals and chips.

Shugart SA 455 Floppy Drives **$185.00**, IBM Compatible cases **$65.00**, 130 Watt Power Supplies **$220.00**, Keyboard **$200.00**, Chips 64K **$3.00**, 256K **$14.00**.

To order call 604-888-2606 or write:
Soltech Industries Inc.
9274 - 194th Street
Surrey, B.C. V3T 4W2

CPU then acknowledges this state by outputting a low on the BUSAK output. During this state other devices, such as CPUs or DMA (Direct Memory Access) controllers, can access the memory and I/O devices controlled by the Z80. In this state the CPU is completely idle and any interrupts incurred will be ignored.

at a logic level one until the appropriate cycle drives two of the outputs low. **Table 2** summarizes the four different machine cycles. The MREQ signal indicates a memory read/write cycle and the IORQ indicates an input/output cycle. Finally, the RD and WR signals indicate read and write operations respectively. Most Z80

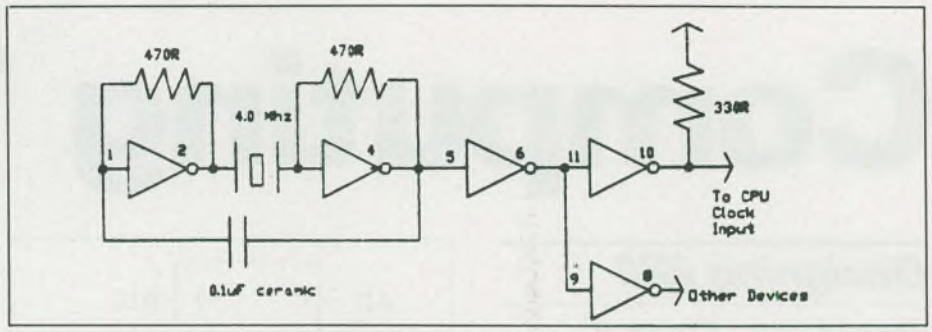

Fig. 3 Z80 CPU clock circuit using the 74L504 Hex inverter

Z80 Output Pins

Generally, the HALT output is used to indicate to a peripheral device that the CPU is waiting for data and it should interrupt the CPU when it has the data ready. Apart from that, this output line is not too useful.

The RFSH output is used to indicate a memory refresh cycle which is used by dynamic RAM chips to refresh its data contents. During this cycle the lower seven bits of the address bus contain a refresh address used by the dynamic RAM. This cycle is provided to reduce the number of chips necessary to connect dynamic RAM to the Z80 CPU. In instances when no RAM is required, this line can be disregarded.

The M1 signal is a multi-purpose output line, which when used with MREQ and IORQ outputs, can indicate an instruction fetch, reset cycle, and interrupt cycle. **Table 1** illustrates the different combinations.

The next set of output pins is called the control bus, and consists of MREQ, IORQ, RD, and WR. All of these signals are active low; this means that they are all

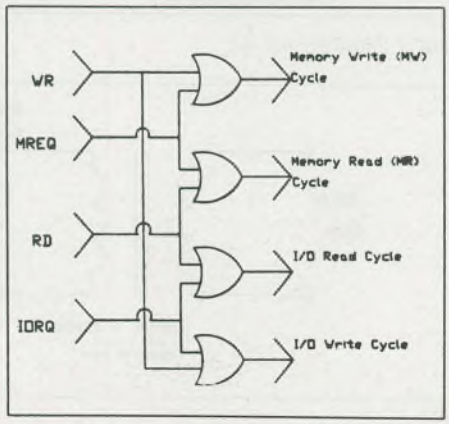

Fig. 5 Decoder for the control bus.

peripheral chips use these four outputs and decode the proper signal internally. However, older 8080 peripheral chips need decoding to indicate what cycle is being performed. **Fig. 5** shows a typical decoding circuit used to indicate what cycle is being performed.

There are sixteen address lines labeled A0 through A15, giving the Z80 the capability to address 65536 different memory locations. When addressing an I/O port, only the lower 8 bits of the address bus is used, allowing the Z80 CPU to address up to 256 different I/O ports.

The final set of pins make up the data bus. These lines, labeled D0 through D7, are bidirectional, i.e., data can be input or output from the same lines. To determine the direction of the data, the RD or WR control lines are used.

Buffering

Since there are thousands of transistors inside the Z80 CPU, not only is the size reduced, but also the drive capability of each transistor. Buffers are needed when the load placed on the CPU exceeds the maximum ratings. The maximum current which the CPU can handle for one output pin is 1.8mA in the logic zero state and 250mA in the logic one state. This means that each output is capable of driving one standard TTL load. **Table 3** shows a list of typical loads placed on the Z80 CPU. For small microprocessor projects (one ROM chip, one RAM chip, and a PIO) no buffers are needed. In fact, the buffers would draw more current from the CPU than the original chips.

Fig. 6 shows how to connect a buffer to the data bus using a 74LS245 bidirectional buffer. The WR signal is connected to pin 1 on the 74LS245, controlling the direction of data flowing from the buffer. Pin 19 is connected to the BUSAK signal

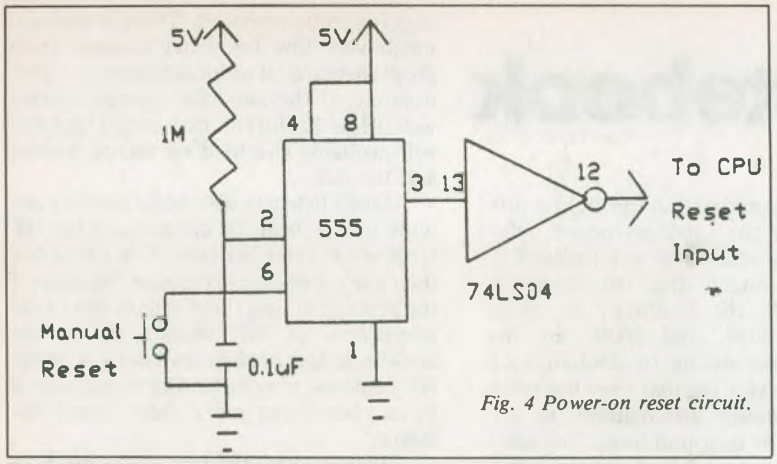

Fig. 4 Power-on reset circuit.

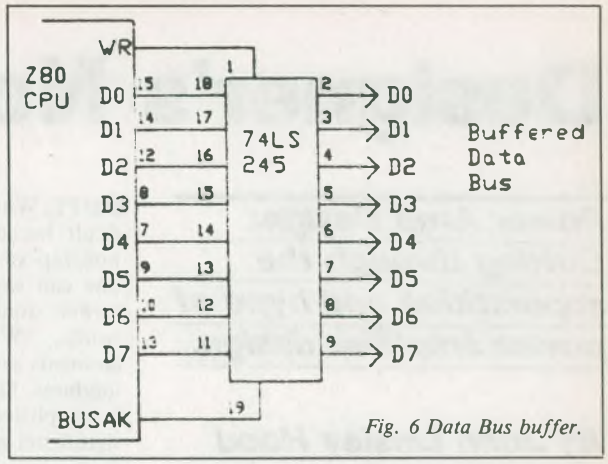

Fig. 6 Data Bus buffer.

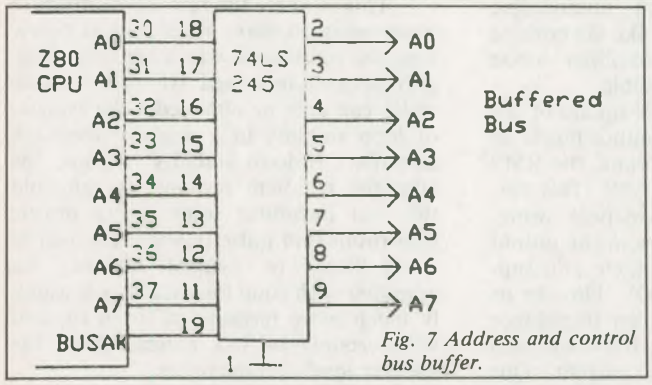

Fig. 7 Address and control bus buffer.

coming form the CPU, insuring that the data bus buffer is shut off when the data bus on the CPU is turned off.

Fig. 7 illustrates how to connect buffers to the control and address buses. Again a 74LS245 buffer is used, but this time pin 1 on the buffer is tied to ground because direction on the address bus does not change. The 74LS245 is not the only buffer that can be used; however, this buffer is preferred because of the simple layout of the pin connections.

Pin Name	Description	Type
GND, VCC	Power	Input
CLK	Clock Frequency	Input
Reset	Power-on Reset	Input
NMI, INT	Interrupts	Input
WAIT	Wait Cycle Request	Input
BUSRQ	Bus Request	Input
BUSAK	Bus Request Acknowledge	Output
HALT	CPU Halt Executed	Output
RFSH	Memory Refresh Cycle	Output
MI	Machine Cycle 1	Output
MREQ, IORQ		
RD, WR	Control Bus	Output, tristate
A0-A15	Address Bus	Output, tristate
D0-D7	Data Bus	I/O, tristate

M1	MREQ	10RQ	Type of Cycle
0	1	0	Reset
0	0	1	Instruction Fetch
0	1	0	Interrupt Acknowledge

Table 1

MREQ	IORQ	RD	WR	Type of Cycle
0	1	0	1	Memory read
0	1	1	0	Memory write
1	0	0	1	I/O Read
1	0	1	0	I/O write

Table 2

	Logic "1"	Logic "0"
Z80 CPU Drive Current	250uA	1.8mA
Standard TTL (i.e. 7400)	40uA	1.6mA
Low power TTL (i.e.74L500)	40uA	0.4mA
EPROM (i.e. 2716)	10uA	10uA
RAM (i.e. 2128)	10uA	10uA
Z80 PIO	10uA	10uA
Z80 CTC	10uA	10uA

Table 3.

Next month, we discuss ROM chips and how to connect them to the Z80 CPU. ■

Food for thought . . .

In the Third World there is a shortage of schools, desks, equipment, teachers, money. Yet education today puts food on the table tomorrow. USC Canada provides literacy programs for adults and working children, management training cooperatives, secondary school scholarships, vocational training and builds and upgrades village primary schools. Write for details.

Please send contributions to:

USC Canada
56 Sparks Street Ottawa, Ontario, K1P 5B1
(613) 234-6827

Registration number 006 4758 09 10

HELP USC CANADA · BREAK THE PATTERN OF POVERTY ·

Founded by Dr. Lotta Hitschmanova in 1945

Designer's Notebook

Power Amp Design: Cutting through the superstition and hype of power amplifier design.

By John Linsley Hood

A CONSIDERABLE amount of mystique surrounds the whole field of audio amplifier design, particularly power amplifiers, and a vast amount of time is spent in labs and listening rooms sorting the good from the not-so-good. How much of this mystique is justified is a speculative question.

My own feelings in this matter, particularly in respect to hifi devotees, are highly ambivalent. On one hand, I am convinced that much of the stock in trade of hifi journals, reviewers, and manufacturers who follow in the train of their approval, is built on the identification and exaggeration of differences which are, in reality, fairly small. On the other hand, I know that there are sound differences between differing designs. Contributing factors undoubtedly reside in a gray area of technology not yet clearly defined.

Output Power

Because of the nature of the sensitivity of the human ear, doubling the power fed to a speaker does not make the resultant sound twice as loud. In reality, this is a logarithmic relationship, in which apparent increases in sound loudness are ted to power by by the equation W = k.log P2/P1. While precision in this field is difficult because the loudness/power relationship varies with level and frequency, one can say roughly that ten times the power doubles the loudness; in other words, 3W, 30W, and 300W are increments corresponding to doublings of loudness. One can see that very big steps in amplifier power are required to get significant gains in sound level. The converse is also true, that microscopic amounts of sound power, like the buzzing of a fly's wings or amplifier noise voltages, are still quite audible.

Power is related to the square of the voltage or current; if an output power of 100W is required into 8 ohms, the RMS output voltage must be 28.3V. This corresponds to an 80V peak-to-peak swing. Allowing for voltage drops in the output transistors, emitter resistors, etc., the supply should be closer to 100V. Now let us suppose that the loudspeaker impedance drops to 2 ohms at 15KHz. 100W will then correspond to 10A peak current. Our amplifier, to meet this spec, would require 28.3V RMS and 10A peak current capability. Fortunately, it usually doesn't require them simultaneously.

Power Bandwidth

The audio spectrum is assumed to lie between 20Hz and 20KHz, but with average listening rooms, average listeners, and average program material, 45Hz to 15KHz is more realistic. Happily, there isn't much program energy above 10KHz, so we don't need to cater for maximum power in this region unless the equipment is going to be reviewed. There is also not much very low frequency content from program material or loudspeakers. Unfortunately, if the amplifier cannot operate well below 30–40Hz it may sound thin and will probably overload on record rumble and the like.

Some listeners with acute hearing can undoubtedly hear the difference when HF response is curtailed even if this is above their ear's frequency response, because of the absence of beat-note effects due to the interaction of HF sounds within the non-linearities of their own ears. A better HF response may not make things sound better, but it can make them sound different.

This is where the first of the needs to compromise occurs. With typical power junction transistors, which are fairly sluggish devices, increased HF power bandwidth can only be obtained a the expense of loop stability in a negative feedback amplifier. If loop stability is poor, the amplifier transient response is bad, and this can introduce some pretty drastic distortions into pulse type signals such as drum beats or cymbal clashes. An amplifier with good loop stability is usually much more pleasant to listen to, and will certainly be less critical about the speaker load characteristics.

Feedback and Stability

Negative feedback is the comparison of the input signal with the output and the generation of a corrective adjustment to the input signal to make sure input and output are closely identical. It is the major tool of circuit designers, but there are snags.

We need to make sure that our use of feedback does not make the whole system unstable, and this is particularly the case for amplifiers which have to drive speakers, since these are notoriously com-

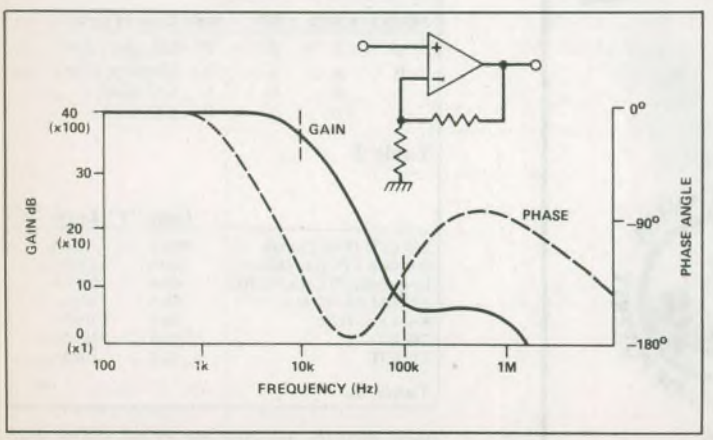

Fig. 1 Gain/phase or Bode diagram for conditionally stable feed-back amplifier (a change of load might make this amplifier oscillate at 30-50 kHz).

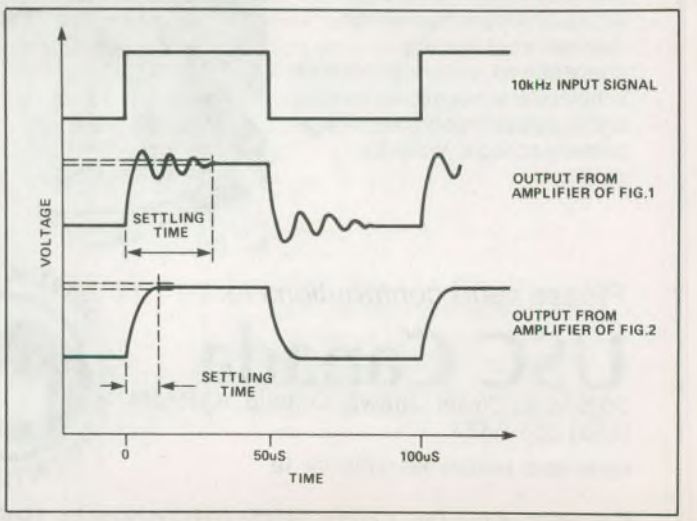

Fig. 2 Influence of gain and phase margins of NFB amplifiers and settling time.

plex in their impedance and delayed response characteristics. It is also essential to remember that a feedback path is just what its name suggests: a means by which signal components can be fed back from the speaker to the input. Since speakers can generate signals of their own because of internal cabinet echoes and inadequately damped reflections, we have to watch this point.

With regard to loop stability, this field was investigated by Bode and Nyquist many years ago in respect to closed-loop servomechanisms. I find the Bode diagram of **Fig. 1** the easiest to follow and explain. In this, the gain and phase shift are shown as a function of frequency. If the amplifier has a gain of 1 or more at a frequency where the feedback is in phase with the input (feedback shift of 180 deg.) it will oscillate. The reason for this is simple: the feedback path is providing an input signal of the right size and phase to generate the actual output without the need for any other signal at all (the circuit starts by amplifying its own inherent noise). If the gain is more than unity, the output will continue to increase until some other effect such as clipping reduces it to unity.

It isn't sufficient merely to ensure that the amplifier doesn't oscillate on load. There must be an adequate margin of gain or phase at the unity gain point to make sure that the amplifier is not triggered into misbehaviour during transients in the input signal. In particular, the settling time, or time required following an input voltage excursion for the circuit to settle to the new value, depends solely on the system's speed and stability margin, as shown in **Fig. 2.** I would very much much like reviewers of audio amps to measure this value for a step input with a real live speaker load, since this is one of the areas where the pursuit of very low THD figures at the top end of the audio spectrum can lead to circuit design characteristics which are bad for the transient handling qualities of the amplifier and make it fussy about the speaker with which it is used. It seems pointless to try to reduce .1 percent distortion at 20KHz to .01 percent if the price you pay is 20 to 50 percent distortion on transient signals.

In a typical audio amplifier, the major factor which dominates the gain and HF phase shift characteristics is the relative slowness of the output transistors. The faster the response of these, the easier it is to design a good, stable amp. The catch is that fast junction output transistors are also more fragile and require more restrictive protection circuitry. This makes the amp less good at driving low impedance loads. The answer, and a virtually complete one too, is to use power MOSFETs. Some of the recent ones have almost instantaneous response and are more linear than either tubes or junction transistors. They too have drawbacks, of which the main one is that they are particular about the phase characteristics of their loads, but there's a simple design answer to this. It is possible to design MOSFET amplifiers that are ten times better than their forerunners.

Distortion

Not all distortions are equal in their unpleasing effects, and the characteristic of distortion can be greatly influenced by the relative phases of the signal components. This effect has relevance to the behaviour of multi-driver speakers, which can jumble up the phases of a signal and

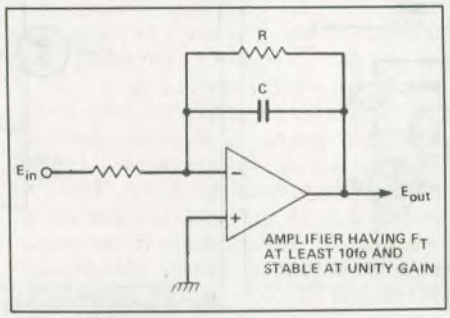

Fig. 3 Feedback amplifier having good gain and phase margins.

thereby alter the nature of the amplifier nasties. Our efforts in the design exercise should be aimed at removing components of distortion which can be so transformed.

Obviously it is helpful if we can keep the distortion of the amplifier as low as possible before feedback is applied, in that low feedback leeds to better loop stability. A useful design yardstick, cribbed from servo theory, is to determine the time constants of the bits of the circuit which lead to HF rolloff, and then make one of these ten times the size of the rest. This isn't as arbitrary as it seems; if we wish to end up with an ideal Bode plot, we must remember that the phase shift due to an RC element begins one decade below the -3dB rolloff point. In this way, the system will behave as though it had only a single phase-shifting component.

Another useful design approach is to limit the system to no more than two stages within the loop, adding more loops if necessary. This isn't always possible with power amps, so other approaches, such as the phase-lead generating step network, may be necessary. One can always put in a an internal loop operating only at HF where transistor trouble is likely to arise, and include only two gain stages.

The aim of the designer should be to produce an amplifier in which the harmonic distortion is as low as possible, and the gain bandwidth is as high as possible, before the application of feedback. The feedback should be used mainly to control the gain and output impedance characteristics rather than as a way of lowering distortion.

As far as the feedback path is concerned, it is best not to use a parallel capacitor across the feedback resistor as this can make the amplifier sound less good on some speaker units. It is also helpful if a small resistor in the range of 0.15 to 0.33 ohms is added in series with the output to act as one element of an attenuator. Against the much lower output impedance of the amplifier, this will assist in attenuating signals originating from the speaker itself. *(Editor's note: this goes against the standard dogma of having the lowest possible output impedance to raise the damping factor. Comments from designers are invited.)*

A final thought with regard to amplifier sound. The human ear is not a particularly good judge of distortion in that a number of randomly chosen people, all reasonable aware of sound quality, either preferred the addition of 0.3 percent third harmonic distortion, or had no specific preferences. Similar work has been done by other investigators. This tends to cast doubt on the value of such judgements, where the listener may actually prefer inferior equipment because it adds a wanted colouration to the sound.

A Practical Design

My preference for power MOSFETs as the output devices is definite, but not just simple source followers where they require an output inductor in the speaker lead to

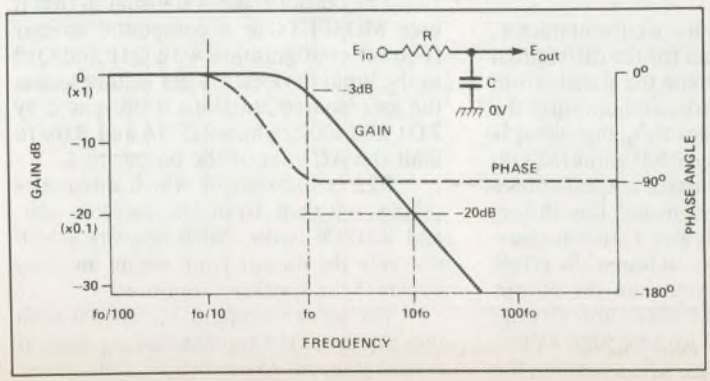

Fig. 4 Gain/phase diagram for a simple RC attenuator; the characteristics of the amplifier in Fig. 2 would be similar to this.

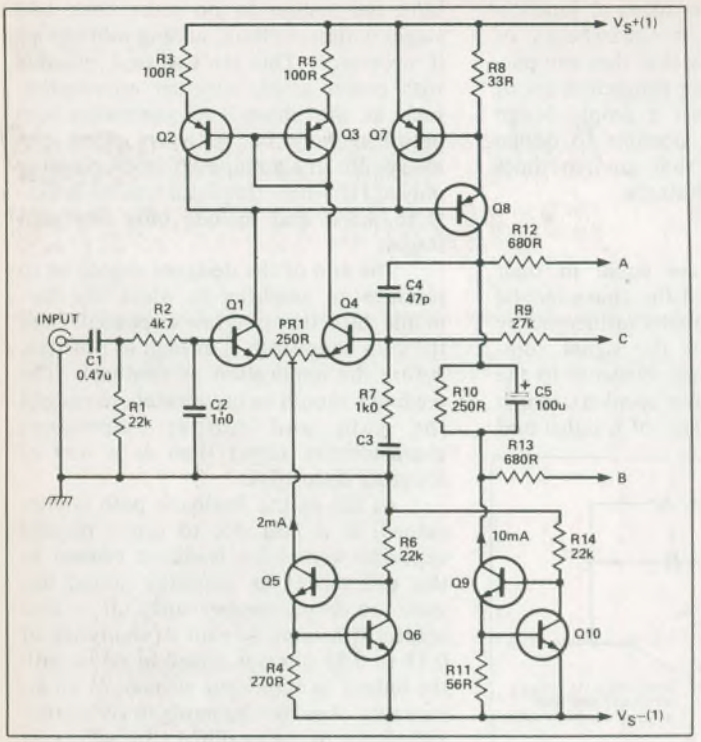

Fig. 5 Power amp. driver stage.

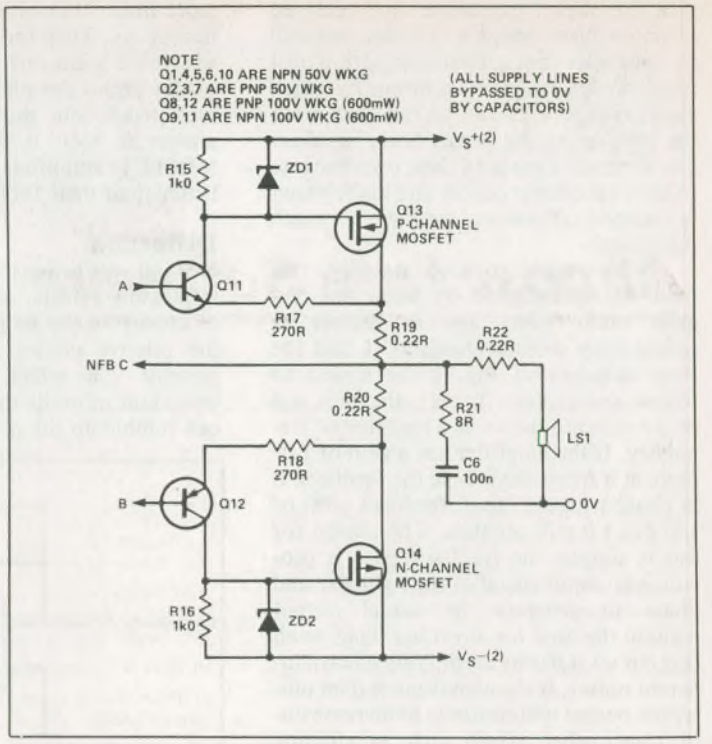

Fig. 6 MOSFET output stage.

prevent VHF oscillation due to the device's own small lead inductance. If the power MOSFET is used in combination with a bipolar small-signal transistor as shown, this small inelegance can be avoided without degradation of the fast response of the MOSFET. The only necessary device protection can then be an output fuse or a current-limited DC supply.

A typical small-signal voltage amplifier to drive this output stage is shown. Because small-signal transistors are cheap I have been lavish in using them to confer some practical benefit to the circuit. R2 and C2 roll off the response at 33KHz to prevent very fast transients from affecting the circuit. R1 defines the zero-volts DC level. Q5 and Q6 are a compound constant-current source, setting 1mA each through Q1 and Q4, and minimizing noise pickup through the negative supply. PR1 allows the output DC voltage (offset voltage) to be set to precisely zero.

I have chosen to use a current mirror, Q2 and Q3, as the load for the differential amp in order to combine the signals from the two input transistors and optimize the input stage gain. From this, the signal is fed to the second stage PNP amplifier Q8, again loaded by a constant current source to ensure high AC gain and low distortion. R11 is chosen to give a collector current of 10mA in order to lessen the effect of variable drive current into the output stage and to push the maximum slewing rate possible with C4 up to a high value.

R10, bypassed by C5, provides the 2.5V bias to set the output stage at 100mA quiescent current.

Under overload conditions, Q9 and 10 limit the current which can be drawn from the -Ve line to 10mA. Q7 and R8 provide a similar protective function for Q8.

R9, R7 and C3 provide the negative feedback path from the output stage to stabilize the AC gain to 27 which allows maximum output (in this case, 50W) from 0 VU or .77V input. C4 provides HF stabilization by means of an internal HF feedback loop enclosing the two stages Q1/4 and Q8, which gives a good well-damped transient response, especially with reactive loads. Eight ohm speakers most definitely do not behave like resistances.

R12 and R13 serve the useful function of preventing temporary latch-up if the amplifier is driven into clipping; in their absence clicks and bangs are prolonged and sound louder.

The output stage is unusual in that it uses MOSFETs in a compound emitter follower configuration with Q11 and Q12 as the input devices. Excess voltage across the gate/source junctions is prevented by ZD1 and ZD2, while R15/16 and R16/18 limit the AC gain of the output to 5.

R22 is the resistor which attenuates signals returned from the speaker unit, and R21/C6 is the Zobel network which prevents the output from seeing an open circuit if the speaker is removed.

The power supplies are shown with two numbers; if two channels are used, it is advantageous to use two separate power supplies to prevent interaction, particularly to prevent power supply nasties from intruding into the sensitive input stages. You could always run the inputs from a regulator, since it draws only 12mA; you can then use a single large power supply with protective fuses in the speaker lines.

This article is meant as a design exercise; I am not going to fill in all the small details of power supplies, PCB, and so on. Designers may wish to do a bit of "fine-tuning" to make sure it as good as possible in all the various conflicting requirements of the system. ■

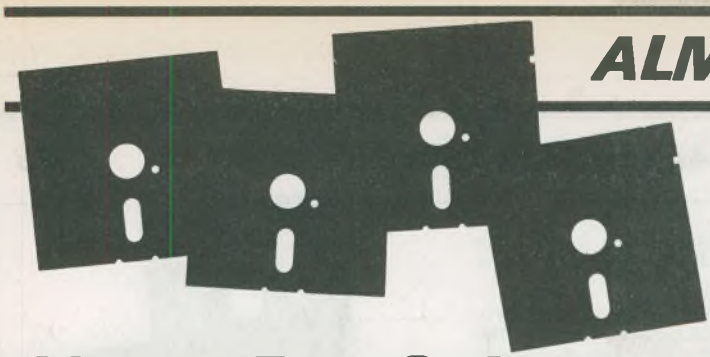

ALMOST FREE SOFTWARE OFFER

Moorshead Publications

Almost Free Software

Almost Free Software (CP/M) ..... #1

Almost Free Software #1, #2 and #3 are for CP/M and are available in a variety of formats: Apple // + CP/M, 8 inch SSSD*, Access Matrix, Morrow Micro Decision, Superbrain, Xerox/Cromemco*, Epson QX-10VD, Sanyo MBC 1000, Nelma Persona, Kaypro II, Osborne and double densities, Televideo, DEC VT-180, Casio FP-1000, Zorba.

Modem 7. Allows you to communicate with any CP/M based system and download files. Complete details were in Computing Now! November 1983.

PACMAN. You can actually play PACMAN without graphics, and it works pretty fast.

FORTH. A complete up-to-date version of FIG FORTH, complete with its own internal DOS.

DUU. The ultimate disk utility allowing you to recover accidentally erased disk files, fix gorched files, rebuild and modify your system. A real gem.

D. A sorted directory program that tells you how big your files are and how much space is left on the disk.

USQ/SQ. Lets you compress and uncompress files. You can pack about 40% more stuff on a disk with this system.

Finance. A fairly sophisticated financial package written in easily understandable, modifiable Microsoft BASIC.

BADLIM. Ever had to throw out a disk with a single bad sector? This isolates bad sectors into an invisible file, making the rest of the disk useable.

DISK. Allows you to move whole masses of files from disk to disk without having to do every one by hand, you can also view and erase files with little typing.

QUEST. A "Dungeons and Dragons" type game.

STOCKS. This is a complete stock management program in BASIC.

SEE. Also known as TYPE17, will TYPE any file, squeezed for not allowing you to keep documents in compressed form while still being able to read them.

Order as AFS #1, and specify system

$19.95 each

Except for 8" disks and those with two disks which are marked with an asterisk (*) above which are:

$22.95

*single density formats require two disks. The package cost for these formats is $22.95.

Almost Free Software (CP/M) .....#2

BISHOW The ultimate file typer, BISHOW version 3.1 will type squeezed or unsqueezed files and allow you to type files which are in libraries (see LU, below). However, it also pages in both directions, so if you miss something, you can back up and see it again.

LU Every CP/M file takes up unneccessary overhead. If you want to store lots of ata in a small space, you'll want LU, the library utility. It permits any number of individual files to be stored in one big file and cracked apart again.

MORTGAGE This is a very fancy mortgage amortization program which will produce a variety of amortization tables.

NSBASIC Large disk BASIC packages, such as MBASIC, are great . . . and very expensive. This one, however, is free . . . and every bit as powerful as many commercial programs. It's compatible with North Star BASIC, so you'll have no problem finding a manual for it.

RACQUEL Everyone should have one printer picture in their disk collection.

Z80ASM This is a complete assembler package which uses true Zilog Z80 mnemonics. It has a rich vocabulary of pseudo-ops and will allow you to use the full power of your Z80 based machine . . . much of which can't be handled by ASM or MAC.

VFILE Easily the ultimate disk utility, VFILE shows you a full screen presentation of what's on your disk and allows you to mass move and delete files using a two dimensional cursor. It has heaps of features, a built-in help file and works extremely fast.

ROMAN This is a silly little program which figures out Roman numerals for you. However, silly programs are so much fun . . .

CATCHUM If you like the fast pace and incredible realism of Pacman, you'll go quietly insane over Catchum . . . which plays basically the same game using ASCII characters. Watch little "C"'s gobble periods while you try to avoid the delay "A's" . . . it's a scream.

Order as AFS #2 and specify system

$19.95 each

Except for 8" disks and those with two disks which are marked with an asterisk (*) above which are:

$22.95

*single density formats require two disks. The package cost for these formats is $22.95.

See Order From Page 51

Almost Free Software (CP/M) .....#3

OIL. This is an interesting simulation of the workings of the oil industry. It can be approached as either a game or a fairly sophisticated model.

CHESS. This program really does play a mean game of chess. It has an on-screen display of the board, a choice of colours and selectable levels of look ahead.

DEBUG. The DDT debugger is good but this offers heaps of facilities that DDT can't and does symbolic debugging... it's almost like being able to step, trace and disasemble through your source listing.

DU87. The older DUU program does have some limitations. The version overcomes them all and adds some valuable capacities. It will adapt itself to any system. You can search map and dump disk sectors or files. It's invaluable in recovering damaged files too.

ELIZA. This classic program is a micro computer head shrinker... it runs under MBASIC, and with very little imagination, you will be able to believe that you are conversing with a real psychiatrist.

LADDER. This is... this program is weird. It's Donkey Kong in ASCII. It's fast, bizarre and good for hours of eye strain.

QUIKKEY. Programmable function keys allow you to hit one key to issue a multicharacter command. This tiny utility allows you to define as many functions as you want using infrequently used control codes and to change them at any time... even from within another program.

RESOURCE. While a debugger will allow you to disassemble small bits of code easily enough, only a true text based disassembler can take a COM file and make source out of it again. This is one of the best ones available.

Order as AFS #3 and specify system

$19.95 each

Except for 8" disks and those with two disks which are marked with an asterisk (*) above which are:

$22.95

*single density formats require two disks. The package cost for these formats is $22.95.

Almost Free Apple DOS Software

Almost Free Apple DOS Software ....#1

While CP/M is a wonderful thing in its own right, the Apple computer can also, and usually does, operate under DOS. For this reason, there's a multitude of programs available for it. Below, we offer a mini-multitude of our own.

The following programs will operate on any Apple //+, //e, //c, or true compatible operating under DOS 3.3. Apple users operating only under ProDOS may have to make alterations to some programs.

Picture Coder: All Apple HiRes pictures take up 36 sectors in their binary form. This program creates a textfile of a program in memory, squeezing out the zero bytes, that can later be EXECd into memory. The textfile often takes up less room on the disk.

DNA Tutorial: Operating under Integer BASIC, this program might appeal to 'clone' owners. In actuality, though, it's an interactive low-res graphics tutorial of DNA in its inherent forms. And you thought your Apple was only good for games...

Toad: Speaking of games, this program is an Applesoft BASIC implementation of 'Frogger' that can be controlled with either a joystick or the keyboard. The user's high scores are saved to disk.

Function Plotter: A fairly extensive Applesoft BASIC program that takes any inputted function and plots it on the HiRes Screen.

Data Disk Formatter: Apple DOS disks need not be bootable to be useful. This binary program formats a disk without setting DOS on the tracks, conserving useful disk space.

BASIC Trace: A program for the advanced Applesoft programmer, this file, when EXECd, displays the hexadecimal locations of each Applesoft line number of a program in memory.

Gemini Utility: A word processor pre-boot for Gemini printer users, this BASIC program initialises the printer's font or pitch before you boot your word processer.

Payments: This BASIC program allows you to keep track of payments and credits to and from up to 100 accounts on a single disk. A sample account is included.

Databox: A small but useful database program in Applesoft BASIC. Sample files are included to get you started.

Nullspace Invaders: A quick BASIC HiRes game testing coordination and judgement as you manipulate a monolith through mysterious gates.

Fine Print: The majority of this software has been obtained from on-line public access sources, and is therefore believed to be in the public domain. Any remaining programs were written in-house. The prices of the disks defer the cost of collecting the programs, debugging them, reproducing and mailing them, plus the cost of the media they're supplied on. The software itself is offered without charge.

Moorshead Publications warrants that the software is readable, and if there are any defects in the medium, we will replace it free of charge. While considerable efforts has been made to ensure that the programs have been thoroughly debugged, we are unable to assist you in adapting them for your own applications.

Order as AFAD #1 and specify system

Each disk is

$19.95

or, as an introductory offer you can order all three for

$39.95

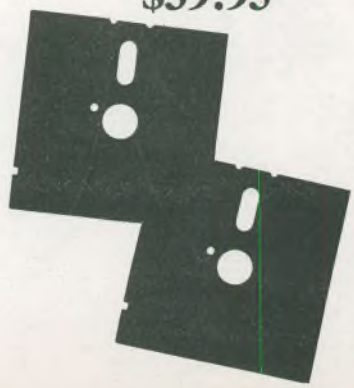

Software Services Moorshead Publications

25 Overlea Boulevard, Suite 601, Toronto, Ontario M4H 1B1

See Order Form Page 51

Moorshead Publications

Almost Free Apple DOS Software ....#2

Amort: A monthly amortization program that calculates monthly payments to an inputted figure, calculates principle, interest on every balance, and prints out the resulting chart.

Voiceprint: An unusual program that uses the HiRes screen to sample sounds inputted through the cassette jacks at the back of your Apple. Sampling rate and other variables can be controlled, and two sounds may be compared side-by-side.

Calc NOW!: Written in BASIC, this spreadsheet program is somewhat slower than VisiCalc, but still offers the power you expect from a spreadsheet. With sample files.

Cavern Crusader: A mix of BASIC and binary programming, winning this HiRes game is difficult, to say the least. For every wave of aliens shot in the cavern, there's always a meaner bunch in the wings.

Newcout: With source file. This binary program replaces the I/O hooks in the Apple with its own so you can operate your Apple through the HiRes screen. Comes with a character set.

Charset Editor: A utility to help you create your own character sets to use with Newcout.

Calendar: A BASIC utility useful for finding a particular day of any inputted month and year, or for printing out any given year.

LCLODR: With source. This binary utility BLOADs any given file into the 16K language card space at $D000. The source is useful in showing how to use DOS commands through assembly language.

Cristo Rey: An animated HiRes BASIC program showing Cristo Rey by moonlight. For apartment--bound romantics.

ATOT: That's an acronym for 'Applesoft to Text'. EXEC this textfile to produce a textfile of your program.

Applesoft Deflator: This program takes a textfile made by ATOT and squeezes it, replacing PRINT statements with '?' and removing unnecessary spaces from the listing.

Order as AFAD #2 and specify system

Each disk is

$19.95

or, as an introductory offer you can order all three for

$39.95

Almost Free PC Software

Almost Free PC Software .....#1

Our Almost Free Software disks, volumes one through three, for systems running CP/M have been so thunderingly popular that we have assembled a volume for IBM PC users. The considerably greater power of a sixteen bit system, coupled with its larger capacity disk drives, have enabled us to offer a collection of programs that will knock the socks off virtually any sentient life form booting the disk. Be warned... wear sandals when you unwrap this thing.

This software will run superbly on genuine IBM PC's and compatible systems.

PC-WRITE While not quite Wordstar for nothing, this package comes extremely close to equalling the power of commercial word processors costing five or six bills. It has full screen editing, cursor movement with the cursor mover keypad, help screens and all the features of the expensive trolls.

SOLFE This is a small BASIC program that plays baroque music. While it has little practical use, it's just a kick to toodle with. It's also a fabulous tutorial on how to use BASICA's sound statements.

PC-TALK Telecommunications packages for the IBM PC are typically intricate, powerful and huge. This one is no exception. It has menus for everything and allows full control of all its parameters, even the really silly ones. It does file transfers in both ASCII dump and MODEM7/XMODEM protocols and comes with... get this... 119424 bytes of documentation.

SD This sorted directory program produces displays which are a lot more readable than those spewed out by typing DIR. It's essential to the continued maintenance of civilization as we know it.

FORTH This is a small FORTH in Microsoft BASIC. It's good if you want to get used to the ideas and concepts of FORTH... you can build on the primitives integral with the language.

LIFE This is an implementation of the classic ecology game written in 8088 assembler. While you may grow tired of watching the cells chewing on each other, in time the source will provide you with a powerful example of how to write code.

MAGDALEN This is another BASIC music program. We couldn't decide which of the two we've included here was the best trip, so we wound up putting them both on the disk. Ah... the joys of double sided drives.

CASHACC This is a fairly sophisticated cash acquisition and limited accounting package written in BASIC. It isn't exactly BPI, but it's a lot less expensive and suitable for use in most small business applications.

DATAFILE This is a simple data base manager written in... yes, trusty Microsoft BASIC.

UNWS Wordstar has this unusual propensity for setting the high order bits on some of the characters in the files it creates. Looks pretty weird when you try to do something other than Wordstar the file, doesn't it... Here's a utility to strip the bits and "unWordstar" the text. The assembler source for this one is provided.

HOST2 This is a package including the BASIC source and a DOC file to allow users with SmartModems to access their PC's remotely. It's a hacker's delight.

Moorshead Publications warrants that the software will be readable. If defects in the medium prevent this, we will replace your disk at no cost. While we have made every effort to assure that these programs are completely debugged, we are unable to assist you in adapting them for your application.

The disk also includes various support and documentation files needed to run the software.

We can provide the Almost Free PC Software Disk volume one on either one standard double sided disk or on two single sided ones.

Order as AFPC #1 and specify system.

Only

$19.95

or $22.95

for two single sided disks.

See Order Form Page 51

continued from page 15

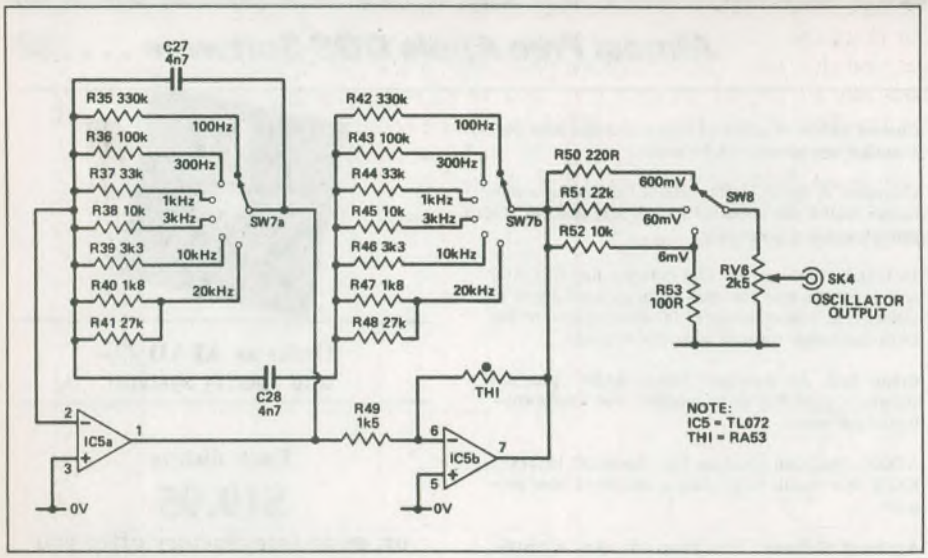

Fig. 5 The final circuit diagram of the spot frequency oscillator.

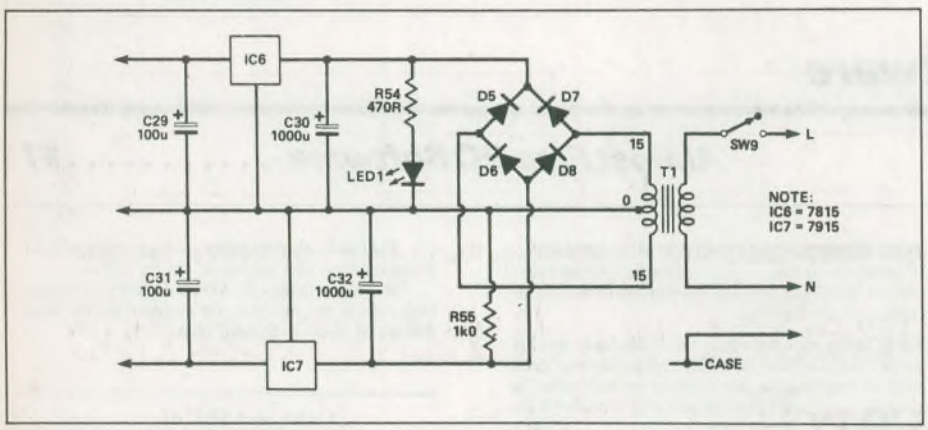

Fig. 6 The circuit diagram of the stabilized power supply.

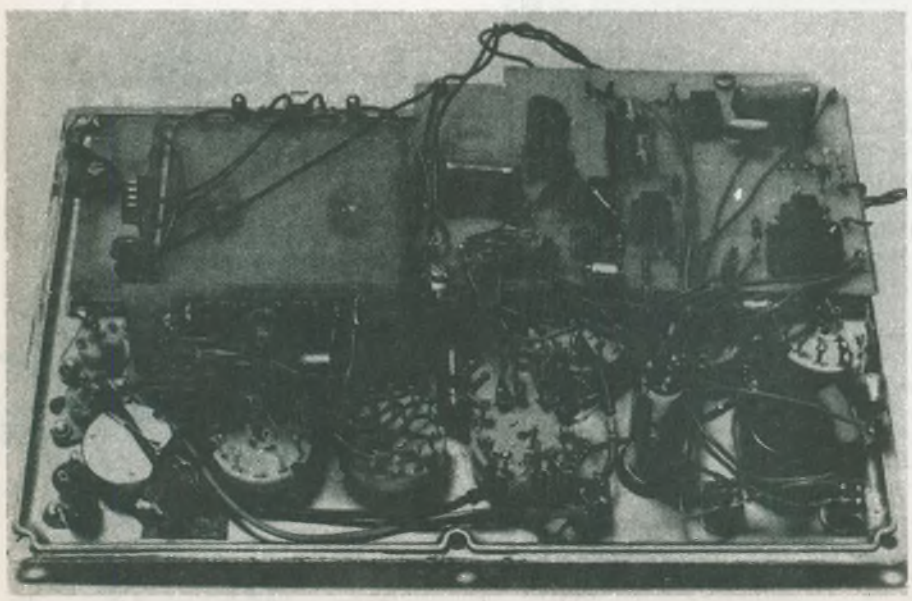

Internal view of the prototype. A number of modifications have been incorporated in the final version, so don't try and follow this wiring too closely!

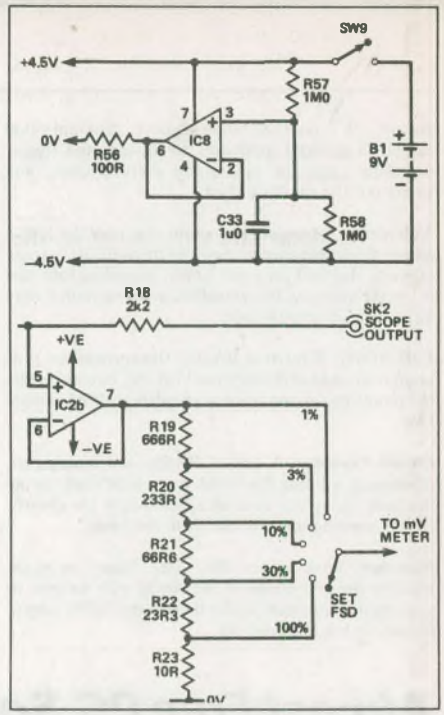

Fig. 7 A dual supply from a battery (top) and changes in the circuit to suit this method.

However, if the supply voltage chosen is the plus and minus 4V5, a problem would arise because the notch amplifier circuit would overload at the 3V RMS required from ICs 2 and 3 for FSD on the measuring instrument. It is therefore necessary to downgrade this a bit by cutting out R19 (2k33) so that SW2b is that shown in **Fig. 7.** This gives a minimum sensitivity of 1 percent. This requires only a 1V swing from the notch amplifier.

The Wien Bridge

It is not a difficult matter to generate quite a good notch in a frequency response and tune it to the test waveform, and there are several circuit choices for doing this. Of these, the two most convenient are the RC Twin-T and the Wien bridge.

The interesting thing about the Wien bridge is that it has zero phase shift and an attenuation of just three at one specific frequency. If one makes the resistors adjustable, this frequency can be altered. If the capacitors are not quite the same, the attenuation will not be exactly three, but this can be adjusted by altering the values of the resistors.

In the circuit I have chosen, the amplifier is used to simply invert the phase of the signal and amplify it by 2x. This utilizes the feature of the Wien bridge that the impedance of one leg is twice that of the other when the phase shift produced by each leg is equal. So, if the amplifier applies a signal to the upper half which is exactly twice that of the lower, the output will come to a null at some frequency

They're the unsung heroes. The folks with jobs you never think about. Jobs that are small in the grand scheme of things. But without them the grand scheme of things wouldn't work.

The guy who spent hours to get you that important software package. Or the teacher who put their own money into ensuring your school has a computer. Don't they deserve more than a slap on the back?

If you agree, please just write a few lines about them. And they could be rewarded with an advertisement about them and their achievements. As well as a gift from Moorshead Publications. **The reward.** Just mail your story to: Moorshead Publications "Reward", Suite 601, 25 Overlea Boulevard, Toronto, Ontario, M4H 1B1. Please be sure to include your name and address. As well as the name, address and a snapshot of the person(s) you want to reward.

Does someone you know deserve a special reward?

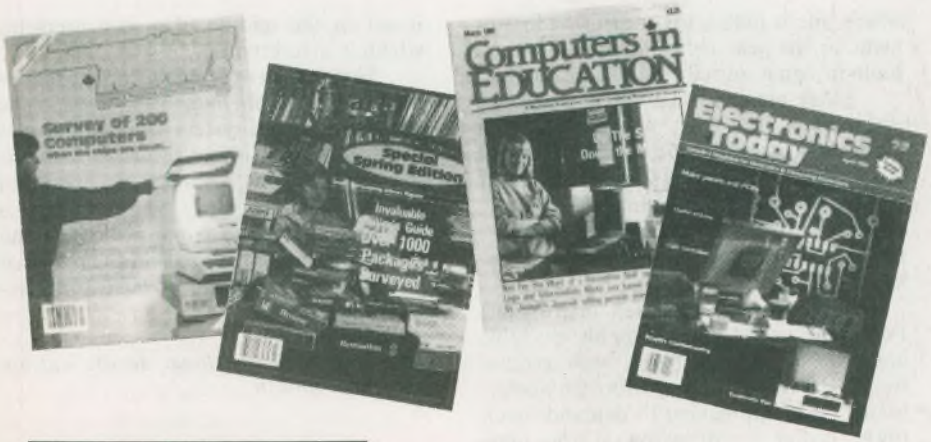

Moorshead Publications

Electronics Today, Computing Now!, Computers in Education and Software Now!

The reward.

dependent on the values chosen. This amplifier method eliminates the problem of requiring a very well-balanced differential amplifier.

If we just want to remove the input signal frequency without attenuating the harmonics, the skirts of the notch must be much steeper than those of an ordinary Wien bridge. However, we can sharpen the notch by applying some negative feedback around the bridge.

To tune the notch frequency so that it exactly coincides with the input frequency, we need to be able to adjust either the Cs or the Rs in the network. Since the operating frequency is given by the equation

$$F_o = \frac{1}{2\pi\sqrt{C_1 C_2 R_3 R_4}}$$

the values for C are too large to allow the use of a variable ganged capacitor unless a very high impedance circuit is used. In fact, if the Rs were 10k each, the capacitors would have to be 16nF for a 1KHz notch frequency, and lower frequencies would require proportionately larger values of capacitors.

It is possible to make such a system with an air-spaced twin-gang capacitor, but the necessary high values of R make the whole unit very sensitive to hum pickup. Overall, I think it is better to use variable resistors, which are easier to get and a lot more compact.

The necessary slow-motion adjustment can be obtained by the use of two resistors in series, one ten times the value of the other, when the high value resistors (as ganged pairs adjusted together) can be used as the coarse adjustment and the lower ones for fine trimming. This principle could be extended, of course, to employ three such resistors in series to allow a very fine adjustment indeed.

Since the resistor which adjusts the gain of the Wien amplifier is a single potentiometer, a ten-turn type can be used in this position to adjust the gain of this leg so that a complete notch is obtained with no residues of the input frequency remaining.

The final part of the system will be a wide bandwidth millivoltmeter to display the value of the distortion and noise residues remaining when the input sinewave is removed.

Since we live in the real world and there will inevitably be some hum pickup somewhere in the system we are testing, it is useful to incorporate a 60 Hz filter which can be switched in. Also, while we are doing that, we might as well include some HF filtering options so that we don't measure the THD over too wide a frequency window, with its associated noise components.

Finally, it is very helpful in tests where one is taking the measuring instrument to the gear being tested, to have a built-in signal source of adequate quality.

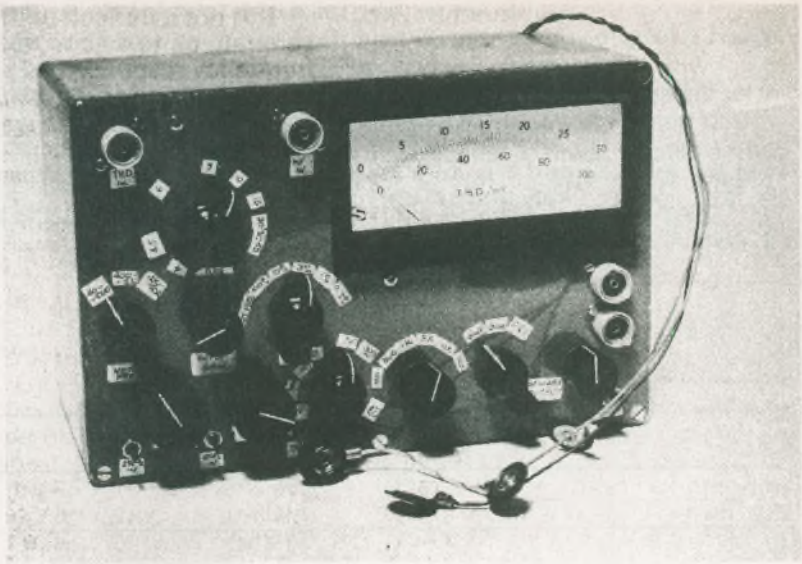

The prototype, looking much the way most prototypes do at this stage in their development!

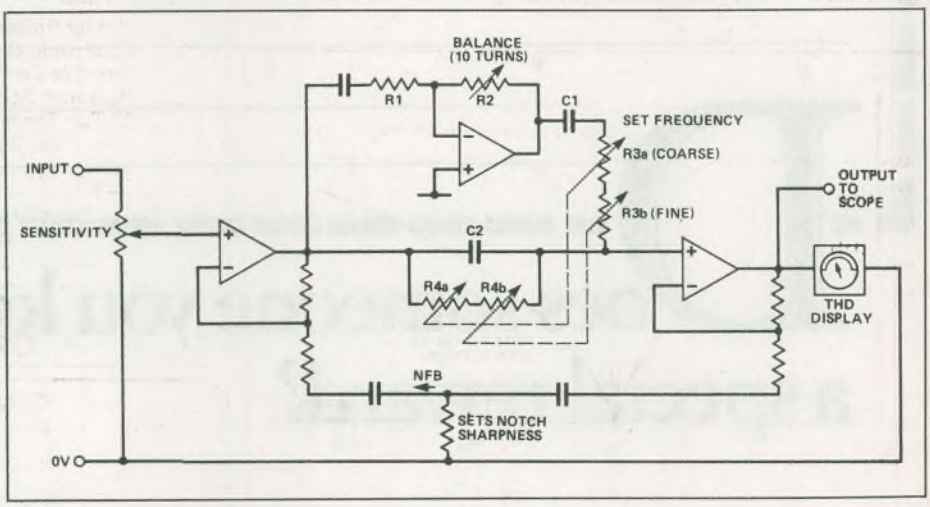

Fig. 8 Wien network with negative feedback to produce a sharper notch.

There are two versions of the above instrument in this project; one a laboratory standard instrument operated from the AC line, and a somewhat simpler version operated from a single 9V battery, which will be somewhat easier to make, if the demands made upon it are less stringent.

I like battery operated instruments myself because they are highly portable and don't cause problems with ground loops. However, if one wants high performance, it is impractical to demand much lower power consumption at the same time. If one then accepts a higher battery drain, say, 10–25mA, it is expensive if one forgets to switch off the instrument after use, while any auto-off circuit may switch it off in the middle of a measurement, which is infuriating.

Hence the two versions of the instrument. I have deliberately tried to make the battery-operated system as economical in use as possible without resorting to exotic ICs, and in both cases I have organized things so that the millivoltmeter is available as a separate input so that it and the oscillator can be used on their own as a means, for example, of measuring frequency response.

PCBs and constructional details will appear next month.

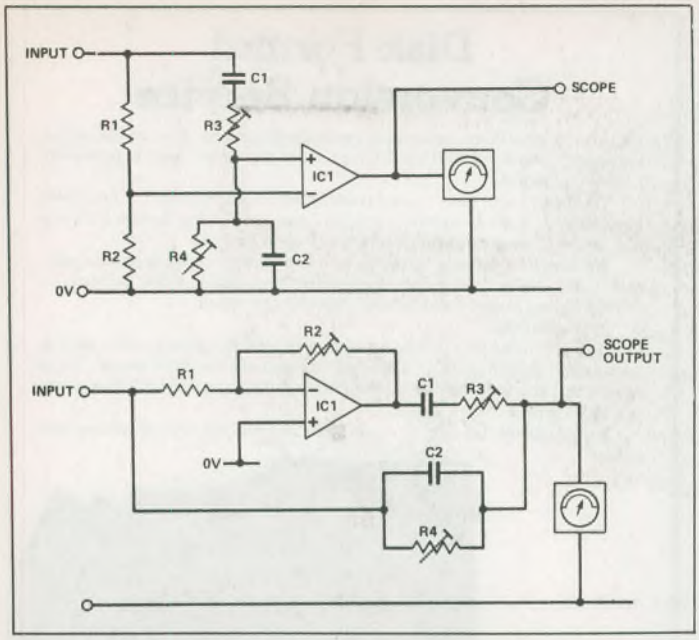

Fig. 9a and b — Two possible arrangements of the Wien network.

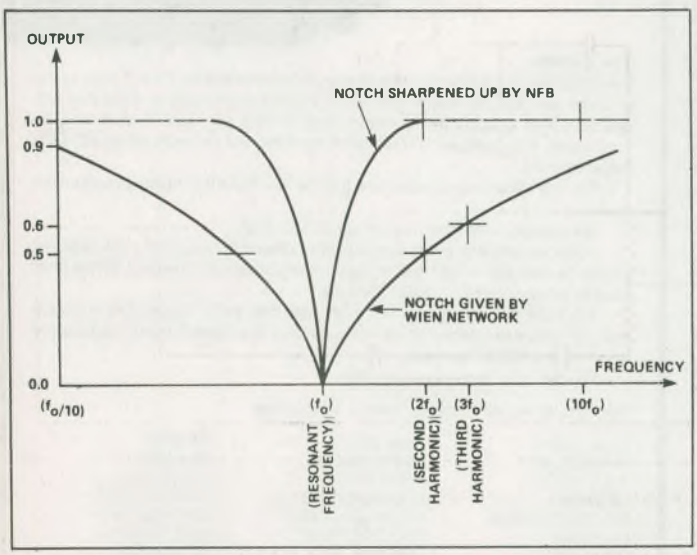

Fig. 10 The notch produced using the arrangement of Fig. 9b.

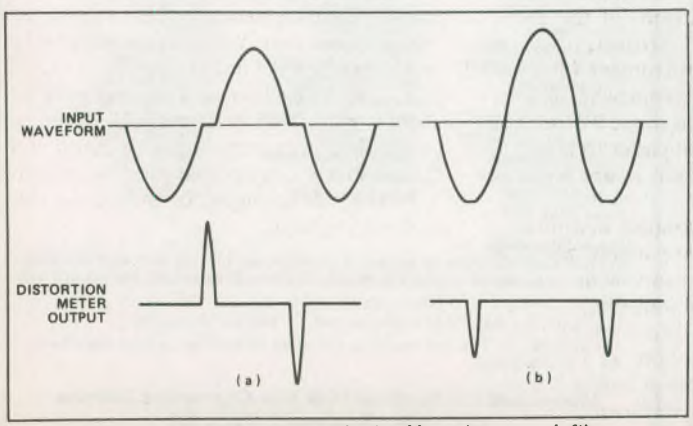

Fig. 11 Examples of the waveforms obtained by using a notch filter on distorted sine-waves.

■

Moorshead Publications
Order Form

Subscriptions:

Please complete reverse side of order form to start or renew a subscription.

Back Issues: $4.00 each; Ontario residents add 7% sales tax. Please circle issues desired.

1977	February										July
1978	April	May						September		November	December
1979	February			March			April		May		July
	August			September			October				November
1980	January	February				May	June			November	December
1981	January	February		March		April			June		July
	August		September		October			November			December
1982	January			March			April			May	June
	July	August		September		October			November		December
1983	January	February		March		April		May		June	July
	August		September		October			November			December
1984	January	February		March		April		May		June	July
	August		October		November		December				

On the following items please add $1.00 for postage and handling plus 7% Ontario provincial sales tax.

Special Publications:

QTY.	ITEM	AMOUNT
.....	Hobby Projects $3.95	$ .....
.....	Electronic Circuit Design $3.95	$ .....
.....	Projects Book No. 2 $3.95	$ .....
.....	Personal Computer Guide $3.95	$ .....
.....	50 Top Projects $4.95	$ .....
.....	Your First Computer $3.95	$ .....
.....	Computers in Small Business $3.95	$ .....

Binders: ☐ Electronics Today; ☐ Computing Now!
☐ Moorshead Publications
$9.25 each plus 7% P.S.T.

BOOKSHELF ORDER FORM

Code (e.g. BP12)	Title (Short-form is O.K.)	Price
.....	.....	$.....
.....	.....	$.....
.....	.....	$.....
.....	.....	$.....
.....	.....	$.....
.....	.....	$.....
.....	.....	$.....

SOFTWARE ORDER FORM

.....	$.....
.....	$.....
.....	$.....
Sub Total	**$.....**
Tax (Ontario Residents)	**$.....**
Postage	**$.....**
Total Enclosed	**$.....**

Orders from the Bookshelf are tax exempt. Please add $1.00 for postage. Remember to put your name and address on reverse side. See over for mailing details.

Do you currently subscribe to Electronics Today — Yes ☐ No ☐
Do you currently subscribe to Computing Now! — Yes ☐ No ☐
Do you currently subscribe to Computers in Education — Yes ☐ No ☐
Do you currently subscribe to Software Now! — Yes ☐ No ☐

BE SURE OF YOUR ISSUE EACH MONTH. SUBSCRIBE TODAY.

BOOKS, BACK ISSUES, SPECIAL PUBLICATIONS, BINDERS — SEE OVER

Moorshead Publications

Suite 601, Overlea Blvd., Toronto, Ontario M4H 1B1.

MERCHANDISE ORDER ☐ Please fill out form overleaf

SUBSCRIPTIONS: ☐ NEW SUBSCRIPTION ☐ RENEWAL

Electronics Today

☐ One year (12 issues) **$19.95** ☐ Two years (24 issues) **$34.95.**

Computing Now!

☐ One year (12 issues) **$22.95** ☐ Two years (24 issues) **$37.95**

Computers in Education

☐ One year (10 issues) **$25.00** ☐ Two years (20 issues) **$45.00**

Software Now!

☐ One year (12 issues) **$19.95** ☐ Two years (24 issues) **$34.95**

For U.S. please add $3.00 per year ☐ other countries add $5 per year ☐

NAME _____

ADDRESS _____

TOWN/CITY _____ PROVINCE/STATE _____

CODE _____ DATE _____

POSTAL CODE _____

☐ Cheque enclosed DO NOT send cash

☐ Mastercard Account No. _____

☐ Visa Account No. _____

☐ American Express Account No. _____

Expiry Date _____

Signature _____

Disk Format Conversion Service

There are a lot of computers on this particular planet and, if you're like quite a few users of several of them you'll have noticed that no two seem to have compatible disk formats.

The data on your disks . . . and possibly the programs as well . . . might well be useable on a whole variety of systems. However, getting the files from one disk format to another is often where things get a bit tricky.

We have the facilities to move files between a whole variety of popular computers. We can end your data compatibility problems in a few seconds . . . without having to enrich the national debt on your behalf.

Here's the rub . . .

If you have files on a disk in any of the formats listed below you can send us the disk and some money . . . the details of which are also listed below. Tell us what format you want the data in. We'll send you back your old disk plus a new one in the format of your choice.

Nothing could be simpler . . . at least, not without several government edicts.

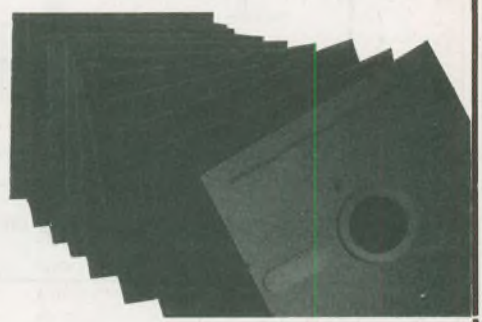

The details:

We will move all the files on a disk to any of the formats listed here. It is up to you to make sure that the files will be useful under the new format. Note that programs moved from format to format may or may not work in their new environments. For example, CP/M based programs will not work under MS-DOS based systems.

We only undertake to make sure that the files make the trip intact and uncorrputed.

We cannot move files on copy protected disks.

While we will take every precaution to ensure the safety of your disks, we cannot be responsible for disks or data lost or damaged in the mail. Please don't send us original disks . . . make backups.

If the disk you send us contain more data than will fit on one disk in the format you want it transferred to we will copy only those files that will fit unless you allow for the cost of two disks.

We can only copy complete disks.

The formats we are currently able to support are:

Apple CP/M**	Apple DOS***	IBM CPM*
IBM MS-DOS 1*	IBM MS-DOS 2*	Actrix SSDD
Actrix DSDD*	Avatar TC10*	Casio FP-100*
Chameleon*	Columbia CPM80*	Cromemco CDOS
H/Z 100 ZDOS SSDD	H/Z 100 ZDOS DSDD*	Heath Magnolia
Idea Bitelex	ISM CP/M DSDD*	Insight IQ-120
Kaypro II/2*	LNW-80*	Lobo Max-80*
Osborne 4 DSDD*	Osborne Osmosis	Otrona CP/M*
PMC Micromate*	Reynolds & Reynolds	Sanyo CP/M*
Superbrain DSDD*	TI Professional CP/M 86*	TRS-80 FEC SSDD
Cromemco DSDD*	Cromemco SSDD	DEC VT180
Nelma Persona	Davidge DSDD*	Digilog*
Epson Multifont DSDD*	Espson QX-10*	Fujitsu Micro 16s*
Groupii III CP/M DSDD*	H/Z 100 CP/M DSDD*	H/Z 100 CP/M
Lobo Max 80512	Micral 9050 DSDD*	Morrow MD 11*
Morrow MD 2	Morrow MD 3 DSDD*	NCR Decision Mt 5*
NEC PC-8001A SSDD	NEC PC-8001A DSDD*	Olympia ETX II
Olympia EX 100 DSDD*	Osborne SSDD	TRS80 FEC T805
TRS80 III Hurricane	TRS80 III Mem. Merch	TRS80 IV CP/M +
TRS80 IV Mont Micro	Teletek 40 trk	Toshiba T100*
Turbo DOS DSDD*	Wang Maws CP/M*	Xerox 820 II
Zorba 40 trk SSDD		

Financial matters:

The base cost is $25.00 for the first disk of any format and 10.00 for each additional disk in the same order plus the applicable surcharges. This includes shipping and the cost of a new disk.

*Add $3.00 per disk, **Add $10.00 per disk, ***Add $12.00 per disk.

Add $3.00 per disk if the contents of your source disk will not fit onto a single disk in the format of your destination.

Moorshead Publications Disk File Conversion Service
25 Overlea Boulevard, Suite 601
Toronto, Ontario M4H 1B1

Anti Phaser

The Anti Phaser is a phaser with a difference: the notch filters sweep in opposite directions. Suitable for any amplified instrument.

By D. Bradshaw

DESIGNING a notch filter is not difficult, and there are several standard configurations to choose from. The situation is rather more difficult where a tunable notch filter is required, and much more difficult in an application such as this where the filter must be voltage controlled so that it can be swept by a low frequency oscillator. The main difficulty is that notch filters tend to require that several filter resistances or capacitances are varied in value and remain accurately matched in order to give usable results over a wide frequency range.

There are two conventional solutions to the problem. The most common one is to use a series of voltage controlled phase shifters, and to then mix the shifted and unshifted signals. At frequencies where the signals are out of phase they tend to cancel each other out and produce the required notches of high attenuation in the frequency response. Two phase shifters per notch are required, and matching of the two voltage controlled resistors (usually JFETs) is unnecessary. The other method is essentially the same but uses a different system to obtain the anti-phase signals. Rather than phase shifters an analogue delay line is utilised.

These days there are practical alternatives to the conventional systems, and it is one of these that is used in this unit. It is based on four operational transconductance amplifiers, two being required for each notch filter. **Fig. 1** shows the block diagram for the Anti-phaser.

Transconductance amplifiers can easily be used to act as bandpass, low-pass, or high pass filters, and it is the bandpass configuration which is used here. This is, of course, the exact opposite of what is required here, but a bandpass response can be converted to a notch type simply by using the filter in the feedback path of an inverting mode operational amplifier circuit. **Fig. 2** shows the basic inverting mode circuit, and the two resistors control the voltage gain of the circuit. The voltage gain of the operational amplifier itself is extremely high, being typically about 100,000 times at low frequencies. What it is actually amplifying is the voltage difference across its two inputs, with the output going positive when the non-inverting (+) input is at the higher voltage, or negative when it is at a lower voltage than the inverting (-) input. Due to the very high voltage gain of the device only a very small voltage difference of typically under 1 millivolt is needed in order to send the output fully positive or negative.

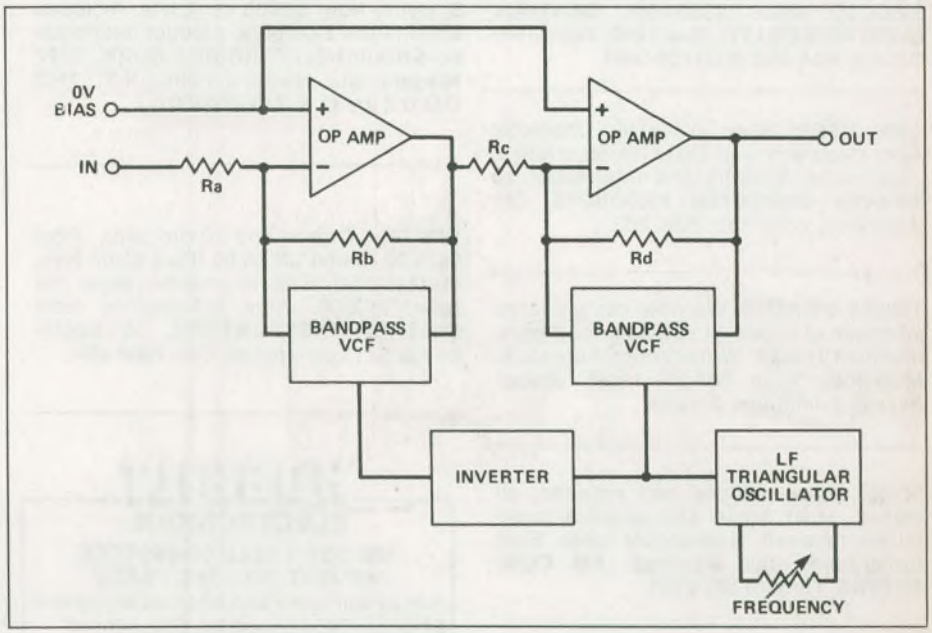

Fig. 1 The block diagram of the Anti-Phaser. This is for one notch filter. Two are used.

In the circuit of **Fig. 2** the negative feedback from the output to the inverting input results in the inverting input being maintained at the same potential as the non-inverting input. If an input signal was to take the inverting input slightly positive, this would unbalance the inputs and send the output negative. The coupling through R2 would result in the inverting input being taken negative, counteracting the positive input signal and maintaining the balance. Just how negative the output has to go for a given input voltage depends on the values of R1 and R2. If we

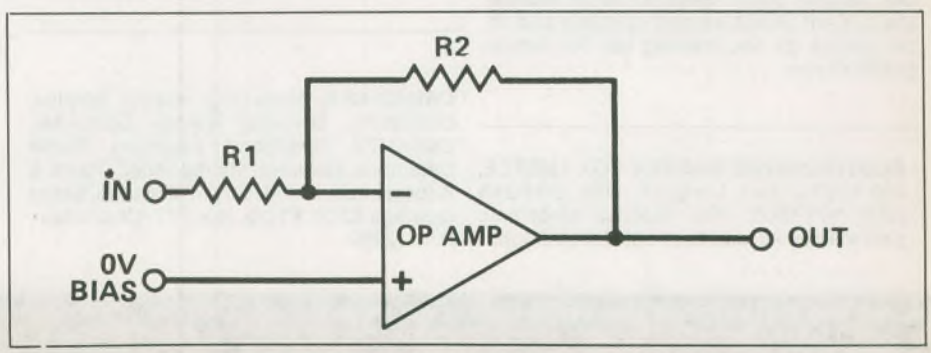

Fig. 2 The basic circuit which inverts the bandpass response into a notch type response.

Product Mart *Where Buyers Find Sellers*

HP-85, Model-A, 16K RAM. Variety of accessories including ROM drawer 82936A, three interfaces and 16K memory module. $4500.00 (value $8500.00). **GENTIAN ELECTRONICS LTD.,** Box 1240, Stittsville, Ontario K0A 3G0 (613) 836-3987.

2068 USER! Now available, Character Font Generator and Text Centrer utilities, plus more! Write for free information to **BEAVER COMPUTER PRODUCTS,** 781 Adamdell, Winnipeg, R2K 2B2.

TS2068 OWNERS. We now carry a large selection of excellent software for the unmodified TS2068. Write for brochure to: **E. MCGHEE,** suite 557-21 10405 Jasper Avenue Edmonton, Alberta.

"DISK Drives aligned and repaired, all makes. Most home and personal computers repaired. Reasonable rates. Fast turnaround. Call evenings: **FM COMPUTERS,** Toronto 281-2151."

TECHNICAL BOOKS. Metalworking, woodworking, electronics, plans, science. Large catalogue $1.00. **ERIC KEATS & COMPANY,** P.O. Box 796, Station A, Scarborough, Ontario, M1K 5C8.

CONSTRUCT your own Satellite TV Antenna for under $100.00. Easy to follow plans $24.95 or send $2.00 for information, refundable on purchase. To: **SOTHIS SATELLITE SYSTEMS,** Box 6637. Station "A", Saint John, N.B. E2L 4S1.

J&J ELECTRONICS Ltd., Box 1437E, Winnipeg, Manitoba R3C 2Z4. Surplus and Semiconductor Specialists. Do you get our bargain flyer? Send $1.00 to receive the current literature and specials and to be placed on the mailing list for future publications.

ELECTRONIQUE MASTER VOX LIMITEE, 400 rue St-Jean, Longueil, Que. J4H 2X6 (514) 670-1550. The largest electronic part's supplier on Montreal South Shore.

PAY TV in Canada gives schematics and details for all systems $11.95. Terrific selection of 4GHZ Microwave TV Dish Systems from $79.95 complete. Includes schematics. Complete product catalogue #2, **SHOJIKI ELECTRONICS CORP.,** 1327 Niagara St., Niagara Falls, N.Y. 1403 C.O.D.s are O.K. 716-282-1001.

DIGITAL Organ and Drum Kits from $475.00, Demo LP $8.00 (Plus $2.00 P/H), Professional 4 to 16 channel Mixer Kit from $675.00. Free Infromation from **SELTRON INSTRUMENTS,** 35 Southbridge St., Leamington, Ont. N8H 4N4.

HOBBIT
ÉLECTRONIQUE
WE DON'T SELL COMPUTERS.
WE JUST SELL THE PARTS!
Send your name and address along with $1.00 to: 7454 Langelier, St. Lecnard Montreal, Que. H1S 3A7.
Tel: (514) 259-5581.

OPENING SPECIAL: Service Centre and Retail Outlet. Computer parts, Interface, Monitor, Printer, Drive, Diskette, system. **FORTRESS ELECTRONICS INC.** 4429, Sheppard Ave., East, Scarborough, 416-293-2266.

BRIDGE Game Software. 1 to 4 players . . . $39.95, IBM colour and Monochrome, Apple, Adam, TI99/4A/16K TRS80-1/3/4/CoCo/CoCo2, Commodore 64/C16/+4/VIC-20. **ALLAN'S MICROCOMPUTING,** Box 313, Azilda, Ontario, P0M 1B0, (705) 983-4341.

CANADIANS; Smashing values; Surplus, closeouts, buyouts; Video, Computer, Cable TV, Telephone, Scanners, Radar Detectors, Wireless Microphones, Parts & Accessories, 60 miles from Montreal. Set of catalogs $2.00 **ETCO,** Box 777, Champlain, N.Y. 12919.

MPF III Apple IIe Compatible $1395.00 64K Slim Drive, Z80, Printer Card, 80 Columns Amber or Green Monitor, Shipping $10.00. Send SASS for catalog. **RAITRONIC'S,** 6650 Ross St., Vancouver, B.C. V5X 4B2.

PRINTED CIRCUITS for E.T.I. projects or from your artwork are available from **WENTWORTH ELECTRONICS,** R.R. #2 Burlington, Ontario, L7R 3X5. Write for your free catalogue!

FOR $10 per kit $2 handling, receive free flyer and any of the following. #1: 1000 asst'd pcs, choke — capacitor — resistor — transistor — hardware — etc. Capacitor specials: #2: 200 asst'd ceramic — #3: 100 asst'd silver mica — #4: 100 asst'd mylar — #5: 50 asst'd tantalum — #6: 50 asst'd electrolytic — #7: 50 asst'd feed-through — #8: 50 asst'd metallic silver mica (Elmenco) #9: 25 asst'd variable. All new material. Unconditional guarantee. Repco Module for portable radio available at special price. **SURPLUS ELECTRO QUEBEC,** 2264 Montee Gagnon, Blainville, Quebec J7E 4H5.

PRIVATE Sale Tektronics 453A-1 Oscilloscope. Dual 60 Meg in perfect condition includes paraphernalia. Best reasonable offer. Paid $2200 15 months ago. After 6 416-654-3356 Toronto.

CERESIST, the guaranteed line of dry transfers for direct etching of PCBs (also for layouts on mylar film etc.) comes in over 65 patterns, including 1:1 and Symbols too. 1-of-a-kind and assortment packages available. Send stamp for free catalog w/sample, or $3 for our SP-6 Hobby Pak with 100s of symbols. Mailing address only: **CERES,** 866 Bloor St. W., Toronto, M6G 1M5.

ZX81, 2068 Disk Drive Controller Card. Use Shugart SA 455 or compatible drive. 160 KB per disk, ZK DOS on EPROM $119.95. **LARKEN ELECTRONICS,** RR #2 Nauan Ontario, K0A 2S0, 613-835-2680.

Advertising in the *Product Mart* section allows you to reach over 30,000 Canadian readers nation wide for $1.50 per word (minimum 25 words). Please contact us for further details on the various sizes and styles available. Moorshead Publications, Suite 601, 25 Overlea Blvd., Toronto. Ontario M4H 1B1, (416) 423-3262.

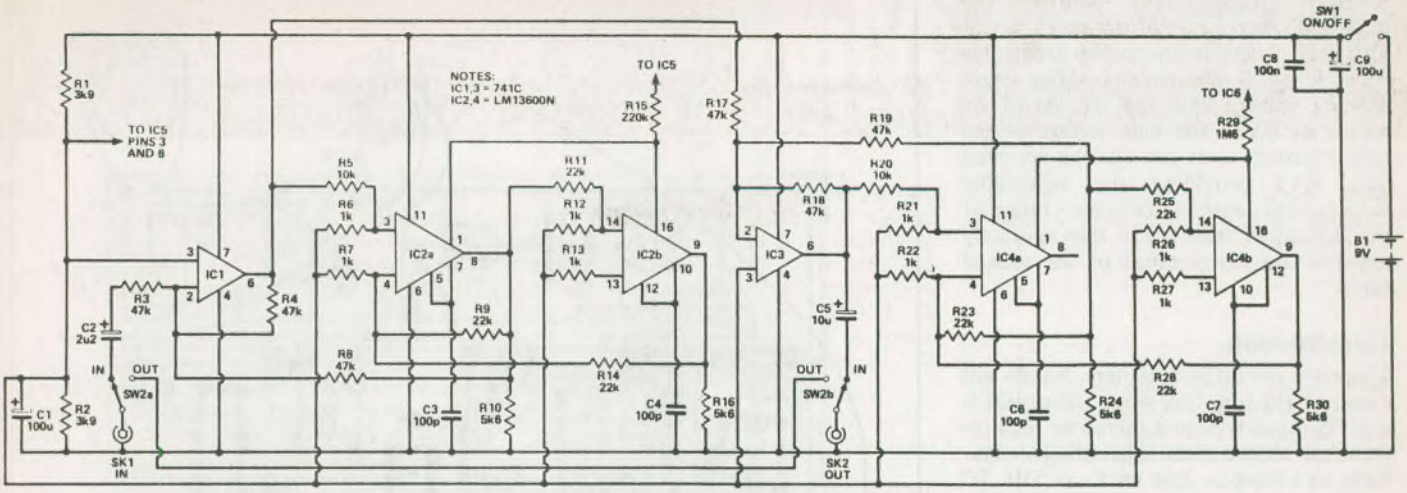

Fig. 3 The signal processing stages of the circuit. The two notch filters each use two ICs and are identical.

assume that they have the same value then any increase in voltage at the input will produce and identical but opposite change in the output voltage. If R2 is made higher in value than R1 it becomes necessary for the output voltage to change by a larger amount in order to maintain the input voltage balance by what is really just a simple potential divider action.

What is of greater importance is this application, if R2 is made lower in value than R1, the output has to change by a smaller amount than any change at the input in order to maintain the balance. The circuit can therefore provide both voltage gain and attenuation, depending on the feedback resistor values. The voltage gain/attenuation of the circuit is simply equal to the value of R2 divided by the value of R1. For instance, if R1 and R2 had values of (say) 100k and 1k respectively, this would give a gain of 1/100, of some 40dB of attenuation if you prefer.

Returning to the block diagram of **Fig. 1**, each bandpass filter is connected in the feedback path of an inverting mode operational amplifier circuit. In effect the bandpass filters replace R2 of **Fig. 2.** At pass frequencies the filter provides a low resistance, and consequently a very low level of voltage gain. Outside the passband it provides a very high feedback resistance and therefore a very high voltage gain. In this application we only require a low level of gain within the filter's passband, and about unity gain rather than high gain at other frequencies. Rb and Rd are therefore used to limit the feedback resistance to a suitable level so that the response of the circuit as a whole is tamed to an acceptable degree.

The sweeping of the filters is accomplished using a low frequency oscillator having a triangular output waveform. The sweep frequency is continuously variable from about 0.1Hz to 10Hz. One of the notch filters is driven direct from output of the oscillator, but the other is driven by way of an inverter stage which provides the anti-phase operation of the second filter.

Circuit Operation

Fig. 3 shows the circuit diagram of the signal processing stages while the oscillator/inverter circuit diagram appears in **Fig. 4.**

Taking **Fig. 3** first, R1, and R2 and C1 provide a centre tap on the supply rail, effectively giving dual 4V5 supplies from the single 9 volt input. The circuit is in fact powered from a 9 volt battery and the current consumption is only about 7 miliamps.

The two notch filters are essentially the same, one utilizing IC1 and IC2 while the other is built around IC3 and IC4. We will consequently only consider the operation of the first filter. The two transconductance amplifers of IC2 are connected in a standard transconductance amplifier state variable filter configuration. Lowpass filtering is produced at the output of IC2b, and the bandpass filtering needed here is obtained at the output of IC2a. This bandpass filtering is connected in parallel with feedback resistor R4, which is the equivalent of Rb in **Fig. 1.** The two transconductance amplifiers are used here as voltage controlled resistors which act as lowpass filters in conjunction with filter capacitors C3 and C4. Feedback through R9 and R14 is used to convert the response at the output of IC2a to the required bandpass type.

SW2 provides a means of bypassing the unit and switching out the effect. In practice this is a heavy duty push button switch so that it can be operated by foot.

Turning to **Fig. 4** now, IC5 is used as a conventional triangular/square-wave oscillator with IC5a acting as the Miller Integrator and IC5b being used as the

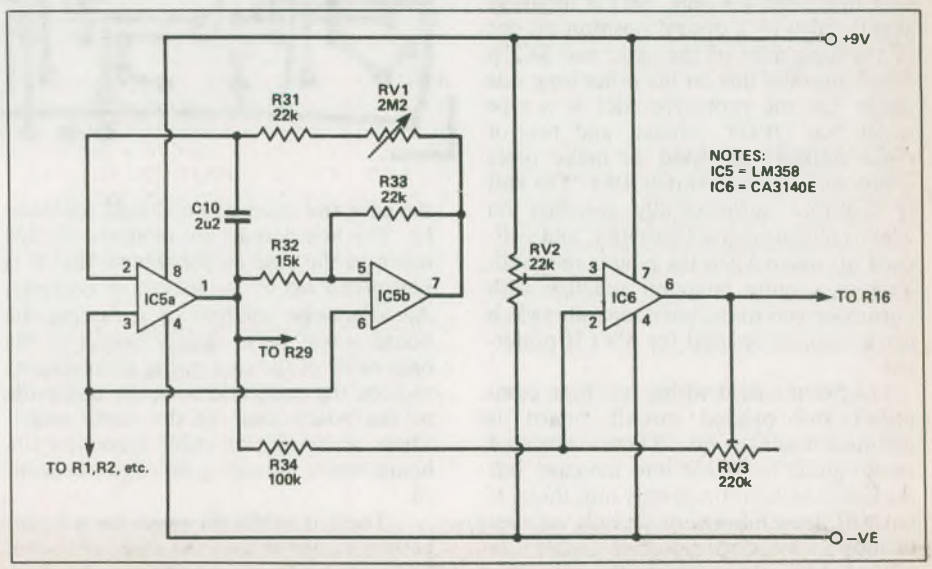

Fig. 4 Part of the circuit, showing the operation of IC5, the L.M. 358.

Schmitt Trigger. RV1 controls the charge/discharge rate of timing capacitor C10 and it acts as the sweep frequency control. IC6 is used as the inverter stage, and its voltage gain can be varied by means of RV3. The bias voltage at the non-inverting input can also be adjusted with RV2 providing the adjustable voltage. This enables the sweep range of the first filter to be set so that it exactly matches the sweep range of the second filter.

Construction

There are few difficulties here, but do not overlook the four link wires. Also, IC6 is a MOS input type and therefore requires the usual MOS antistatic handling precautions to be taken. Use an 8 pin DIL IC socket for this device, do not fit it into place until the unit is otherwise finished, and handle it as little as possible.

C10 must be good quality non-polarised component (ie not an electrolytic or a tantalum type), and the printed circuit board is designed to take a printed circuit type having 15mm lead spacing. However, it should be possible to fit other types onto the board without too much difficulty, but the component used in the C10 position must be physically quite small.

When all the link wires and components have been fitted onto the board connected the battery clip and fit pins at the points where connections to the other off-board components will be made.

Case

SW2 and RV1 are mounted on the top of the case (which in this case is the panel opposite the removable one). SW2 must be a heavy duty component since an ordinary push button type is unlikely to stand up to foot operation for long, SK1 is mounted slightly high of a central position on one of the long sides of the case, and SK2 is fitted opposite this on the other long side panel. On the prototype SK1 is a type which has DPDT contact, and two of these contacts are used as make types which act as on/off switch SW1. The unit is therefore automatically switched on when a plug is inserted into SK1, and switched off again when the plug is removed. This is a quite common practice with musical effects units, but a separate switch can of course be used for SW1 if preferred.

After the hard wiring has been completed the printed circuit board is mounted inside the case. There are printed circuit guide rails built into the case, but the board will not fit directly into these. It must be fitted into the guide rails via a set of four plastic adaptors which enable it to be mouted at right angles to the rails. This adaptors are not normally supplied with the case and must be purchased separately. The board must be mounted as low down in the case as possible so that it is not obstructed by the sockets or controls. An alternative method of mounting the board would be to simply bolt it to the base panel of the case, using short spacers to keep the connections on the underside of the board clear of the metal panel. There are plenty of small spaces on the board where mounting holes can be drilled.

There is sufficient space for a 9 volt battery at one end of the case, and some foam material can be used to trap the battery firmly in place there. Four small cabinet feet are fixed to the base panel of the case to prevent the unit from slipping when SW2 is operated.

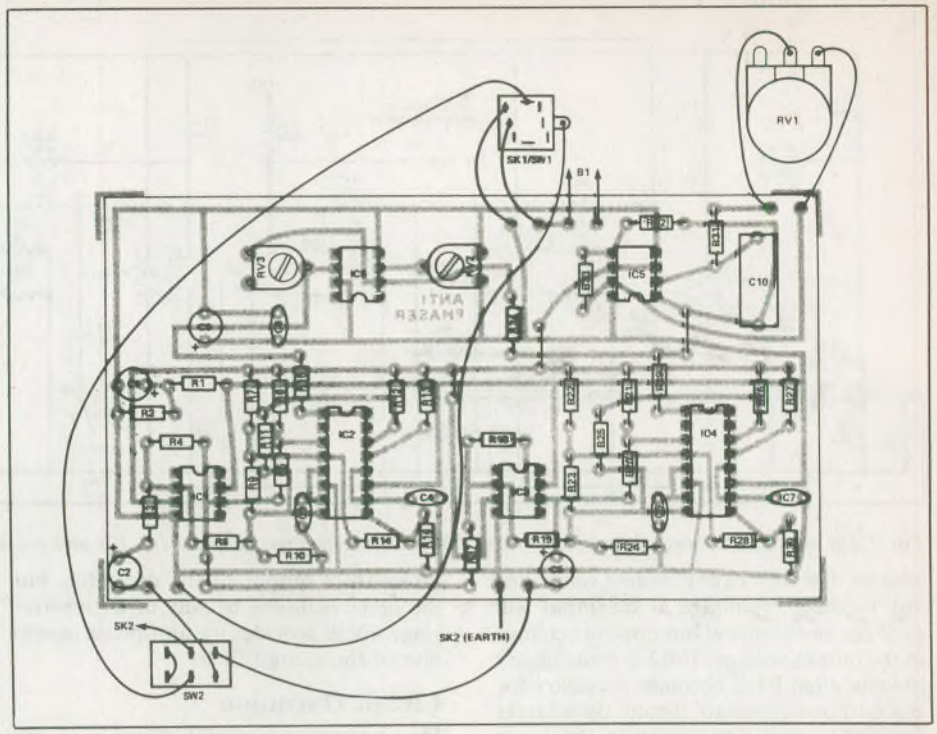

Fig. 5 The PCB layout. Assembly is straightforward, but see the note in the text about C10.

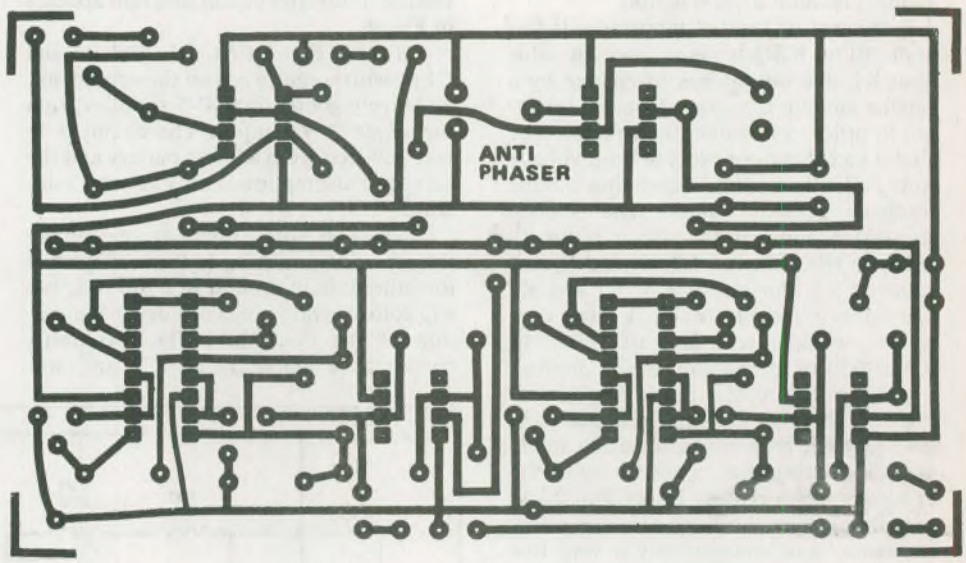

In use

The electric guitar or other instrument connects to SK1 by way of the usual screened jack lead, and as explained previously, the unit is automatically switched on and off as the plug is inserted into and withdrawn from SK1. The output signal is taken from SK2, and again, a normal screened jack lead is used to take the output to the amplifier (or whatever).

RV2 and RV3 should be set at a roughly mid setting initially, and the unit

PARTS LIST

Resistors
(All ¼W 5% carbon)

R1, 2	3k9
R3, 4, 8, 17, 18, 19	47k
R5, 20	10k
R6, 7, 12, 13, 21, 22, 26, 27	1k
R9, 11, 14, 23, 25, 28, 31, 33	22k
R10, 16, 24, 30	5k6
R15	220k
R29	1M5
R32	15k
R34	100k

Potentiometers

RV1	2M2 linear
RV2	22k 0.1W horizontal preset
RV3	220k 0.1W horizontal preset

Capacitors

C1, 9	100uF 10V radial elect
C2	2u2 63V radial elect
C3, 4, 6, 7	100pF ceramic plate
C5	10uF 25V radial elect
C8	100nf ceramic
C10	2u2 polyester or carbonate

Semiconductors

IC1, 3	741C op amp
IC2, 4	LM13600N or LM13700N dual transconductance amp
IC5	LM358 dual op amp
IC6	CA3140E MOS op amp

Miscellaneous

SK1	Standard jack with DPDT contacts
SK2	Standard jack
SW1	Part of SK1
SW2	Heavy duty DPDT push button switch
B1	9 volt

150 by 80 by 50mm diecast aluminium box; printed circuit board; control knob, four guide rail adaptors; battery connector; for 8 pin DIL IC holders; two 16 pin DIL IC holders; Veropins, wire, etc.

should then provide the anti-phase phasing effect. However, the two notches will almost certainly cover different frequency spans and will not exactly complement one another. By adjusting RV2 and RV3, using a process of trial and error, it should be possible to set the range of the first filter so that it matches that of the second. This adjustment is probably most easily accomplished with RV1 adjusted to give a middle modulation frequency of about 1Hz. It is also easier if the input signal contains a wide range of frequencies (a low frequency squarewave or a noise signal for example) since the phasing effect is then most apparent. Of course, you can use any settings for these two presets that given an effect you like, and you do not have to adjust them for matched sweeps.

The sweep range of the first filter should be satisfactory, but if necessary the range of frequencies covered can be moved up by making R29 lower in value or shifted down by using a higher value resistor here. ■

PC/XT Compatible

ECS1-PC/XT
$1295.00

• 8088 processor • optional Intel 8087 numeric coprocessor • 64K memory exp. to 256K on board • double sided double density disk drive • detachable keyboard • colour-graphic board • 130 watt power supply • support PC software • 90 day warranty. 8 slot Mother board.

ECS4 Systems

~~$1179.00~~
Special
$995.00

• dual processor 6502 and Z80 • 64K RAM • controller card • disk drive • Hires tilt amber monitor • colour graphics • detachable keyboard with special function • 90 days warranty.

UNIQMODEM 1200 HC
1200/300 BPS Intelligent Modem Hayes Compatible

The UNIQMODEM 1200 HC is Hayes Compatible, a high quality, low cost modem for use with personal computers, stand-alone terminals, or other intelligent communications devices or systems.

$395.00

XT/PC MAIN PERIPHERAL

Mother Board 8 Slot	$295.00
Color Graphic Card	$169.00
Multifunction	$169.00
Monochrome Card	$149.00
Monochrome Graphic	$269.00
Game Port	$ 49.00
RS232 Card	$ 69.00
Parallel Interface	$ 69.00
Disc Controller Card	$ 99.00
Case	$ 75.00
Keyboard (Cherry)	$125.00
Power Supply 130 Watts	$149.00
Printer Cable	$ 25.00
RS232 Cable	$ 25.00
Disk Drive Cable	$ 15.00
Moving Message Board	$495.00
TTL and CMOF test Card	$ 99.00
150 Watt Power Supply	$159.00

ELECTRONIC CONTROL SYSTEMS
1590 Matheson Boulevard, Suite 1 & 2 Mississauga, Ontario L4W 1J1
(416) 625-8036 Hours — Mon. to Fri. 10-6, Sat. 10-2

Circle No. 23 on Reader Service Card

WHY SPEND A FORTUNE ON A DIGITAL CAPACITANCE METER?

The MC100A comes completely assembled and calibrated and at $89.95 is an outstanding value. The extensive range of 1 pF to 9,999 uF (no external meters required) and true hand held portable size (only 4¾" x 2½" x 1½") make the MC100A an extremely practical and easy to use instrument for the hobbyist technician or engineer.

CHECK THESE OTHER FEATURES
*Basic accuracy 1% (± one count) on pF, nF ranges, 3% (± one count) on uF range.
*Uses single 9V battery (not included).
*Decimal points light up when battery is low or when capacitor is overrange.
*Full 4 digit high efficiency LED display uses special circuitry to save on batteries.
*Constructed with a tough impact resistant plastic case.

ONE YEAR PARTS & LABOUR WARRANTY

1 pF to 9,999 µF

$89.95

DAETRON
935 THE QUEENSWAY
BOX 641
TORONTO ONTARIO M8Z 5Y9
(416) 255-9701
DEALER ENQUIRIES INVITED

PLEASE SEND ME
_____ (Quantity) MC100A(s) @ $89.95 $_____
Ontario residents add 7% PST $_____
Postage — $1.85 (per instrument) (C.O.D. orders add $1.59) $_____
☐ I ENCLOSE CHEQUE ☐ MONEY ORDER ☐ BILL MY VISA TOTAL $_____
☐ VISA CARD NO. _____
EXPIRY DATE _____ SIGNATURE _____
Immediate shipping on orders with money orders, VISA or certified cheque.
Personal cheques please allow 2 to 3 weeks for clearance.
NAME _____
ADDRESS _____
CITY _____ PROV. _____ POSTAL CODE _____
MAIL TO DAETRON 935 THE QUEENSWAY BOX 641 TORONTO ONTARIO M8Z 5Y9

Circle No. 7 on Reader Service Card

HAMEG OSCILLOSCOPE HM 605

Test Cable — 4mm Banana 126074

Coaxial test cable; length 1.15m, characteristic impedance 50 OHM, cable capacitance 12pF. Input voltage max. 500V_p. **$10.40**

Test Cable BNC-BNC 126023

Coaxial test cable; length 1.2m, characteristic impedance 50 OHM, cable capacitance 126pF. Input voltage max. 500V_p. **$9.48**

Adapter 4mm Banana to BNC T627

Two 4mm binding posts (19mm between centers) to standard BNC male plus. Input voltage max. 500V_p. **$11.50**

50 OHM Through-Termination 805-53-000

For terminating systems with 50 OHM characteristic impedance. Maximum load 2W. Max. voltage 10V_{ms}. **$26.17**

Carrying Cases

For HM203-1 and HM203-3	HZ42	$66.00
For HM312, HM412, HM512, and HM705	HZ43	$48.00
For HM307, HZ62, and HZ64	HZ44	$39.00
For HM103	HZ45	$39.00
For HM203-5, HM 204 and HM605	HZ46	$73.50

Viewing Hoods HZ47

For HM203, HM204, HM208, HM605, HM705, HM808, HM312, HM412, HM512, and HM812 **$14.00 ea.**

Scope Tester HZ60

For checking the Y amplifier, timebase, and compensation of all probes, the HZ60 provides a crystal-controlled, fast-rising (typ.3ns) square-wave generator with switchable frequencies of 1, 10, 100kHz, and 1MHz. Three BNC outputs provide signals of 25mV_{pp} into 50 OHM, 0.25V_{pp} (open circuit for 10X and 100X probes); accuracy ±1%. Battery-powered or AC supply operated (optional). **$63.75**

Component Tester HZ65

Indispensable for trouble-shooting in electronic circuits. Single component and in-circuit tests are both possible. The HZ65 operates with all scopes, which can be switched to X-Y operation (ext. horizontal deflection). Non-destructive tests can be carried out on almost all semiconductors, resistors, capacitors, and coils. Two sockets provide for quick testing of the 3 junction areas in any small power transistor. Other components are connected by using 2 banana jacks. Test leads supplied.

Examples of Test Display

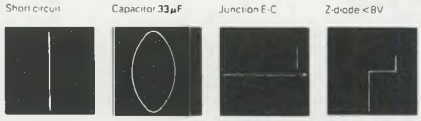

LIST $75.00

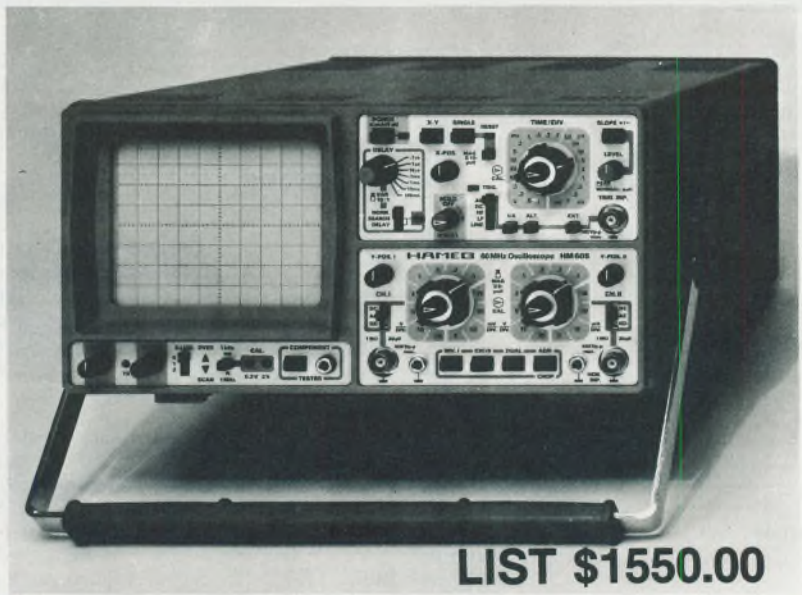

LIST $1550.00

60 MHz Multifunction Oscilloscope

Y: 2 channels, DC-60 MHz, max. 1 mV/cm, delay line;
X: 2.5 s/cm-5 ns/cm incl. x10 magnification, delayed sweep;
triggering up to 80 MHz; var. hold-off time; Component Tester.

The new **HM605** is a truly **versatile scope** satisfying a wide variety of exacting requirements in **laboratory, production**, and **service**. The maximum input sensitivity of **1mV/div.** facilitates the display of extremely low-level signals. Despite their high sensitivity, the HM605's vertical amplifiers are of **excellent stability** and **low drift** design with not more than 1% overshoot.

The built-in **delay line** permits viewing of the trigger edge at all times. The **overscan feature** indicates if any part of the trace passes the vertical limits of the CRT screen. An **analog Y-output**, switchable to Channel I or II, allows further processing of the signal.

Reliable triggering is ensured up to at least **80 MHz**, and trigger facilities include vertical mode **alternate triggering**, line trigger and single sweep operation. Other trigger features are **variable hold-off time**, RF- and LF-filters at any sweep speed for TV frame and line displays, as well as normal and **automatic peak-value triggering**. An LED indicates when the sweep is triggered. Sweep ranges from **5ns/div.** to **2.5s/div.** ensure optimum resolution of slow and fast signals. The **variable sweep delay** facility enables any section of the waveform to be expanded by **1000** and more for detailed signal analysis. A rectangular **14kV CRT** with illuminated graticule provides exceptionally bright and sharp displays.

A **unique feature** for scopes in this price range is the built-in **switchable 1kHz/1MHz squarewave generator** providing **0.2V** and **2V** calibration signals with a risetime <**5ns**. It is now possible to self-test instantly the transient response of the vertical amplifiers and compensation of **modular attenuation probes** for utilization of the **full bandwidth of scope and probe.**

A **Component Tester** is also incorporated. The HM605's **outstanding price/performance capability** is not likely to be matched by similar products in the near future.

BCS ELECTRONICS LIMITED®
980 Alness St. Unit 7,
Downsview, Ontario
M3J 2S2
(416) 661-5585
TELEX 065-28169
Mon-Fri 8-5 pm, Sat 10 am-1 pm

Circle No. 21 on Reader Service Card

Crescendo Alarm

By A.N. Collinson

This circuit is designed for the benefit of those who find the start of the day a little too alarming. It can be coupled to an alarm clock or almost any other timing mechanism, and produces a output which builds up from nothing to full volume. The sleeper is thus awakened by the very minimum volume necessary.

The input can be an oscillator or almost any other audio source, such as music from a clock radio. R1 and R2 provide attenuation and the signal is then fed to IC1, a transconductance amplifier whose gain is controlled by the current entering pin 5. Q1, D1, D2 and R11 provide a constant current of about 1uA which is used to charge capacitor C5. The constant current ensures that the voltage across C5 rises linearly, full charge being reached after about 3 or 4 minutes. This voltage is passed to IC1 via IC2; R3 and R5 are included to compensate for IC2's offset. Some experimenting may be necessary with R5 if the offset causes an output when you don't want one.

The output of IC1 is coupled via R10 and C4 to the audio amplifier IC3 and then to the loudspeaker. If a power amplifier output is not required, IC3 can be deleted and the output taken from C4. Constant current source Q1 can be any small-signal PNP general purpose transistor.

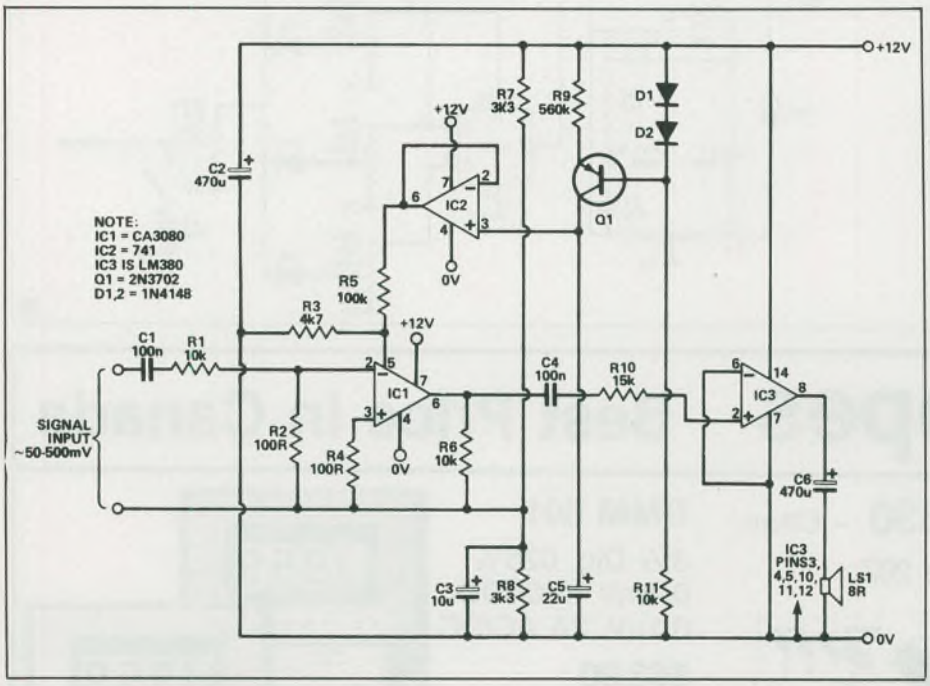

Expanding Ex-Or Gates

By L. Robertson

Exclusive-OR gates are only obtainable in 2-input packages, and simply cascading two gates does not give the correct truth table. Any application, therefore, which requires an Ex-OR gate with three or more inputs is going to require some tricky logic combinations.

In the first circuit, inputs A and B are fed into gate 1 and the output of the gate is combined with input C at gate 2. This arrangement satisfies every part of the truth table except A = B = C = 1, where the output from gate 2 will be 1 instead of 0. To overcome this problem, inputs A and B are also fed to gate 3 so that when both are high the consequent high output from that gate will disable gate 4 and so produce a final output of 0.

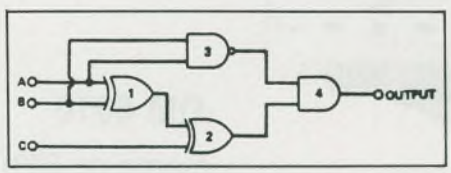

If a four-input arrangement is required, the expansion can be achieved by treating inputs C and D in the same way as inputs A and B in the first circuit. Thus, in the second circuitt gate 5 performs a similar function to gate 1 and gate 6 behaves in the same way as gate 3.

The final permutation is a six-input gate, shown in simplified form in the third circuit diagram. The three-input Ex- OR gate shown as gate 4 is made up as shown

continued on next page

DACOR® LTD.
HEBOT II
ETI July '80 MADNESS UPDATED
ROBOTICS NOW $99
NATIONAL ELECTRONICS, Box 683, Stn Q, TORONTO, M4T 2N5
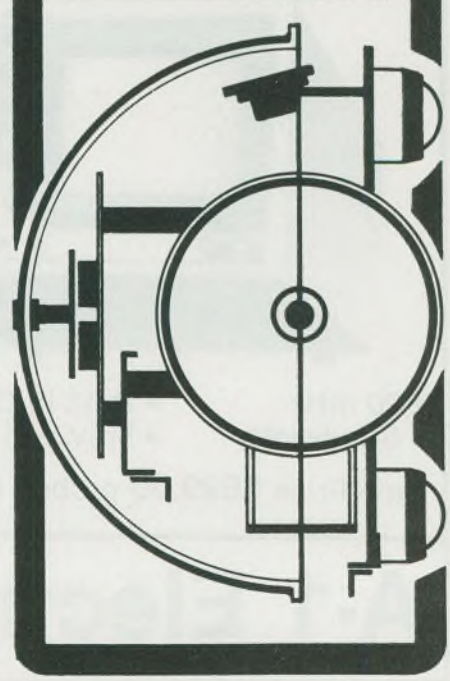
Circle No. 22 on Reader Service Card

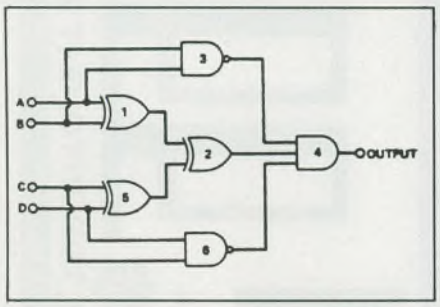

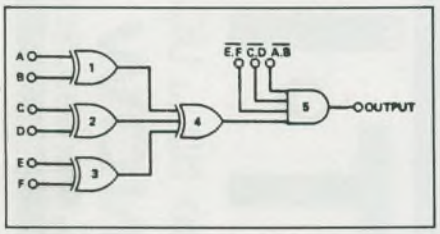

in the first diagram above and the pairs of inputs AB, CD, EF are combined in three NAND gates and fed to three of the inputs of the final AND gate.

Walking Ring Sequencer

By S.P. Giles

This circuit is useful for generating voltages for note sequences, gating, controlling filters, etc. A 555 timer is used as a simple voltage controlled clock with the 5 meg pot determining sequence speed along with the voltage at the control voltage input. This input will vary the speed with a positive voltage applied. This function is non-linear, has a 3:1 range and increases speed as the voltae decreases. The range is 2Hz to 7KHz; the outputs overlap so the final output is apparent as four steps. Negative inputs should not be applied without the optional gate protection circuit. The 1u0 cap and switch provide a slide function.

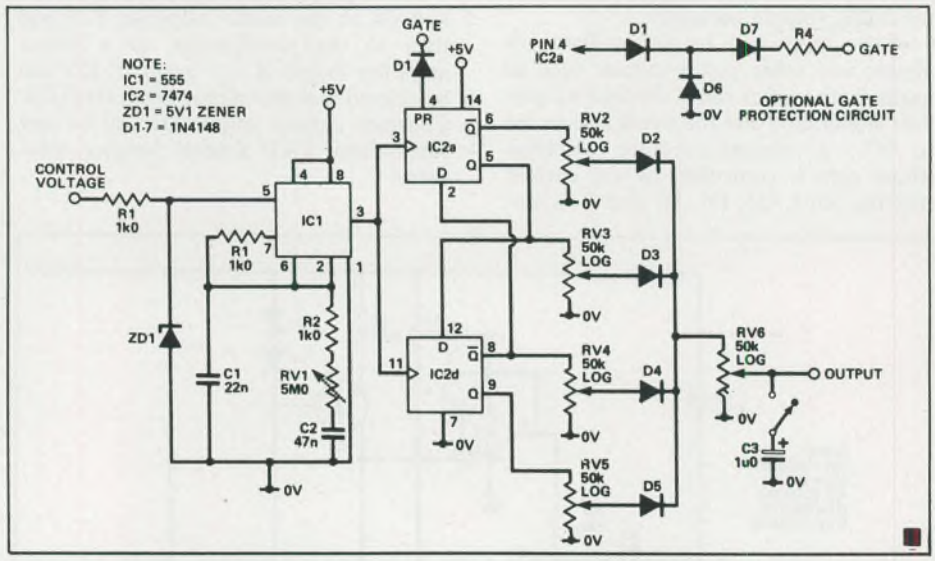

Oscilloscopes Best Price in Canada

OSCILLOSCOPE 33330 - Chan.

Mode-33330 Dual Trace Scope 20Z

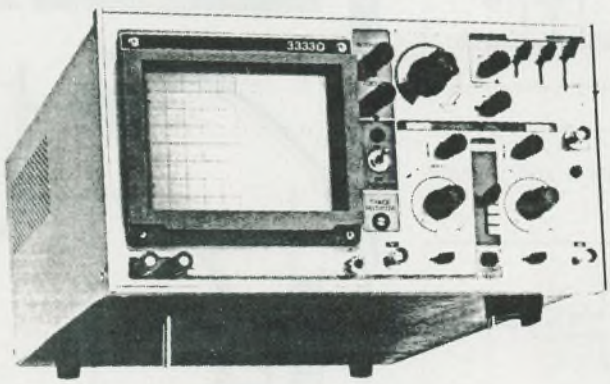

- 20 mHz
- Bandwidth
- Built-in Compon
- 5mV vert. Sensitivity

Sale Price **$529.00** probes included

DMM 601

3½ Dig. 025%
0.1mV. 100ADC
0.1uV. 2A AC/DC

$63.90

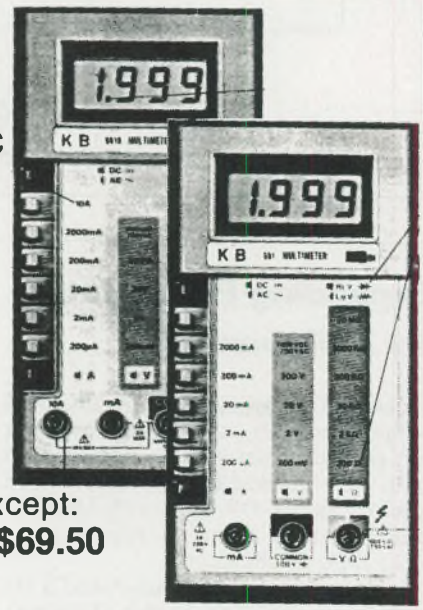

DM 6010

(same as 601) except:
10A MP AC-DC **$69.50**

A-1 Electronics

5062 Dundas St. W., Toronto, Ont.
M9A 1B9 (416) 231-4331
Order by Mail, Chargex or Mastercharge
Mail Orders add 5% for shipping.

Circle No. 34 on Reader Service Card

Electronics Today

The world of electronics is changing, not year-by-year, but day-by-day. Our future depends heavily on the developments in the electronics field: computers to speed the flow of information and to remove the drudgery from our lives, control systems to improve productivity in our factories and offices and to reduce energy wastage. Entertainment is also now largely electronic: TV, VCR's, Hi-Fi and information systems such as Telidon.

Defence, communications, navigation . . . the list goes on and on.

We are living in an electronic world and **Electronics Today** reflects this, keeping you in touch with what is happening and what is changing. Each month **Electronics Today** reports on new products and applications as well as presenting circuits and state-of-the-art projects.

Features: A vast range of subjects are covered in the magazine, from microwave ovens to music synthesizers to satellite communications, but this gives only a glimpse at the true scope.

Projects: Each month **Electronics Today** describes at least two electronic projects, a high proportion of them designed, built and tested in ETI labs. Almost all build into attractive units using printed circuit boards available from several sources.

Circuits and Design: Most months **Electronics Today** carries a "Circuits" feature, which either describes a multitude of applications for a particular device, or different circuits for a given application. These are invariably written by professional circuit designers.

Microcomputers: Each issue of the magazine has a computer review as well as a regular column "Computing Today" plus several other articles and frequently projects for the advanced microcomputer user.

SAVE UP TO 55%

To: Electronics Today Subscriptions, Moorshead Publications, 25 Overlea Blvd., Suite 601, Toronto, Ontario, M4H 1B1 (416) 423-3262

YES, I want to subscribe to Electronics Today. **I understand that I may cancel my subscription at any time and receive a refund on the unexpired portion.**

☐ **Please send me a full year** of Electronics Today (12 issues) at the special rate of $19.95, a **48%** saving off the newsstand rate.

☐ I would prefer **two years** (24 issues) at $34.95, a saving of **55%** from the newsstand rate.

For US add $3.00 per year, other countries add $5.00 per year.

☐ Cheque/Money Order enclosed ☐ Visa ☐ MasterCard ☐ Am. Exp

Card No _____ Expiry Date _____

Name _____

Address _____

City _____

Province _____ Post Code _____

COMPUTER
PARTS GALORE INC.
316 College St.
Toronto, Ontario M5T 1S3

Toll Free Orders Only
1-800-387-1385
Order Checking (416)925-8291
Technical Data (416)925-1105

SOCKETS

AMP IC SOCKETS

As you know AMP makes the best IC sockets. With a double wipe action and a very wide open target for easy insertion, the best.

6, 8, 14, 16, 18, 20, 24, 28, 40
Pin in stock at only
1.5¢ PER PIN

ASCII KEYBOARDS

Now, we have a new keyboard, micro controlled with 3 levels of pre-coded functions for Basic, CPM etc. and at the same old price as before.

Function Keyboard, Numeric $89.95
Function Keyboard, Standard $79.95

SOLID ABS CASE

NUMERIC
$59.95

This is a high quality Hall Effect keyboard made by Microswitch of Canada for AES data and now bought by us for 10% of the $169.00 that AES paid for them in 10,000 lots. They are a very good word processing keyboard with both serial and parallel data outputs for use with APPLE and IBM type systems and come complete with a ribbon cable connector and complete pinout. **$24.95**

WIRED CARDS

16K	$ 45.00	Applaext 128K	$140.00
128K no IC	$ 34.95	Sprite gr.	$ 69.95
128K OK	$ 55.00	TMS9918A IC	$ 18.95
128 64K	$ 99.00	DISC SHMRCK	$ 45.00
128K 128K	$150.00	80 Column	$ 65.00
MC3242 IC	$ 12.00	80 Col. Sofsw	$ 69.00
DISC	$ 45.00	Grippler	$ 50.00
Z-80	$ 45.00	Grip cable	$ 19.95
Applacard	$150.00		

KEYTRONICS

PROGRAMMABLE KEYBOARD
An excellent ASCII Keyboard, fully Apple Compatible. Full size with numeric pad, fully programmable key switches with full data **49.95**

POWER SUPPLY

CSA APPROVED
Our Famous "BLACK BEAUTY" power supply, now reduced in price but not in quality. Our ratings are 5V-5A; 12V-2.5A; 5A-1/2 A; 12V-1/2A for real **$79.95**

OUR 6502 BOARD

Now only $29.95 still with all the versatility of the original and a full 8 slots.

APPLE® DETACHED KEYBOARD $159.00

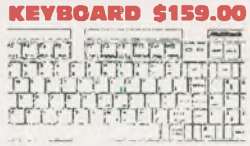

The excellent MAK-II Apple detached keyboard using serial data (IBM) format. Plugs directly into Apple PCB

GREAT DEAL

THE GREAT DEAL CARRIES ON FOREVER AND GETS BETTER

Our proven 6502 motherboard plus a numeric case plus a black beauty power supply plus a numeric function keyboard plus any 4 bare pcb for **$225.00**

SOLDERLESS BREADBOARD

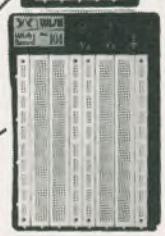

Solderless prototyping boards are the best way to quickly breadboard up a circuit. The holes are made especially for IC's, resistors, and other small parts with 22-28 gage wire leads, takes WW pins too.

WB-106 ..... **$42.95**
3 IC strips, 5 power strips
4 Binding posts, Aluminum plate
WB-104-3 ..... **$29.95**
2 IC strips, 1 power strip
2 Binding posts, aluminum plate
WB-108 ..... **$59.95**
4 IC strips, 7 power strips
4 Binding posts, aluminum plate
WB-104 ..... **$33.95**
2 IC strips, 4 power strips
2 Binding posts, aluminum plate.

NEW LOW BARE PCB PRICES*

- Real time clock
- Rana 4 drive
- 9 V Music
- Disc Controller
- Disc Controller (Shamrock)
- PIA card
- EPROM
- WILD CARD
- SAM TALKS
- COMMUNICATIONS

GROUP 2 **$9.00 each**

- Grippler
- 80 Column
- 80 Column Soft Switch
- Z-80
- RGB
- Sprite graphics
- APPLACARD 128K ADD ON

GROUP 3 **$11.00 each**

• SSM MODEM • APPLACARD • APPARAT EPROM PROG • 16K • 128K

All boards come with a parts list and placement diagram. We have all the parts of the PCB's just ask for them.
*Prices so low we require payment with order

MEMORY FLASH

256K-150Ns DRAM	$19.75
64K-150Ns DRAM	$ 2.49
64K-200Ns DRAM	$ 2.89

Prime stock, limited quantity.

CONNECTORS

DB SERIES

DB-25 M solder	$1.95
DB-25 F solder	$1.95
DB-25 M IDC, Flat cable	$5.95
DB-25 F IDC, Flat cable	$5.95
DB-25 M Right angle PCB	$4.95
DB-25 F Right angle PCB	$4.95
DB-25 Shell	$1.00
DB-15 M solder	$1.95
DB-15 F solder	$1.95
DB-15 F IDC, flat cable	$3.95
DB-15 M right angle PCB	$2.95
DB-15 F right angle PCB	$2.95
DB-15 Shell	$1.00
DB-9 M solder	$1.75
DB-9 F solder	$1.75
DB-9 M right angle PCB	$2.50
DB-9 F right angle PCB	$2.50
DB-9 Shell	$0.75

DRIVE CONNECTORS

50 Pin Edge C, 8" drive	$5.95
40 Pin Edge C	$4.95
34 Pin Edge C, 5-1/4" drive	$5.95
20 Pin Edge C, Hard drive	$4.95
34 Pin Fem header 17 x 2	$3.50
26 Pin Fem header 13 x 2	$3.00
20 Pin Fem header 10 x 2	$2.00

ASSORTED SEMI-CONDUCTORS AND OTHER STUFF

(A) RED LED S/M/L	10/$1.00
(B) GREEN LED S/M/L	8/$1.00
(C) AMBER LED S/M/L	8/$1.00
(D) PIN PHOTODIODES, INFRA-RED	2/$1.00
(E) PHOTO TRANSISTOR, NPN VISIBLE	2/$1.00
(F) LDR (LIGHT DEP RESISTOR)	$1.00
(G) FET ELECTRET MIKE, TINY 10MM	$2.00
(H) 1N4001	10/$1.00
(I) 1N4004	8/$1.00
(J) 1N4007	6/$1.00
(K) 25AMP-600V BRIDGE	$2.95
(L) 25AMP-600V BRIDGE	$3.50
(M) 6AMP 200V BRIDGE	$1.50
(N) 3AMP-200V BRIDGE	$1.00
(O) DIODE 3AMP-600V	3/$1.00
(P) 1N914/1N4148 Silicon diode	10/$1.00
(Q) 7805 1AMP-5V regulator	2/$1.00
(R) 7812 1AMP-12V regulator	$0.75
(S) 78M12 ½AMP-12V regulator	2/$1.00
(T) LM317 Variable 1AMP regulator	$1.50
(U) LM323 5V 3AMP regulator	$2.95
(V) LM350 Variable 3AMP reg	$3.95
(W) 2½" 80hm mini speaker	$1.50
(X) MINI TOGGLE SWITCH SPDT	$1.95
(Y) MINI PUSH BUTTON SWITCH, NO	$0.50

EXTENDED 80 COLUMN for Apple IIe

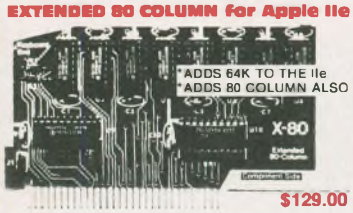

$129.00

"NICE PRINT" APPLE II +, IIe CARD

An APPLE II +, APPLE IIe precision parallel printer card for use with EPSON and GEMINI (and similar) to generate multiple fonts, sizes and near letter quality printing. The printer steppers are controlled to give multiple and incremental strike capability to achieve the above.

COMPLETE WITH CABLE **$119.00**

FANS FANS FANS

Has your IBM look-a-like system started to make funny grinding noises as the Taiwanese fan bearings start to run out of oil, if you have oil-no problem, but unless you do something the neighbours will soon call the police. We got some nice American fans, in 3" and 4¼" sizes 110 Volt new and like new from equipment (checked)

3" NEW	$14.95
4¾" NEW	$14.95
3" USED	$ 9.95
4¼" USED	$ 9.95

Since they are American they last forever.

IBM POWER SUPPLY

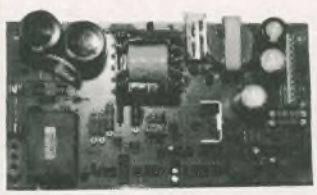

One of the nicest open frame IBM type switching power supplies we have ever seen. Came from the defunct NCR IBM compatible. runs the whole thing, has +5V-7A, +12V-3A, -5, -12-¼A. A very good unit for starter system. Will not run hard disc system. A real Steal at **$49.95**

NICADS

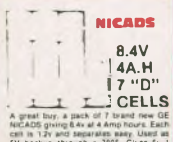

8.4V
4A.H
7 "D" CELLS

A great buy, a pack of 7 brand new GE NICADS giving 8.4v at 4 Amp hours. Each cell is 1.2v and separates easy. Used as 5V backup through a 7805. Gives 5v 1 Amp for 4 hours $14.95

TRANSFORMERS

A) Make an IBM linear supply good for 250 Watts. This unit gives +5v @ 20Amps +12v @ 10Amps and −5, 12 @ 1Amps. Unit gives the proper AC for above $19.95
(B) 8VAC 5Amp ..... $ 9.95
(C) 8VAC 5A, 25VAC CT, 2.4A $14.95
(D) 12VAC ½ Amp ..... $ 2.50
(E) 24VAC 4Amps $12.95
(F) 500 WATT ISOLATION/STEP UP DOWN 110/220, 20 Lbs Height $24.95
(G) 12VAC 3Amp ..... $ 7.95
(H) 8V12A, 25VCT, 3.4A, 22V, 4A made for a fully stuffed S-100 system $24.95

SWITCHING POWER SUPPLY

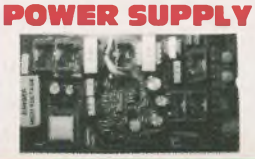

Another great bargain from PARTS GALORE, A small power supply switching style that give +5v−4A; ±12v 1A and −5v (adjustable) on a compact 4x8" open frame PCB. Cost Northern Telecom $50.00 when they bought 5000 pieces. We got em when a subcontractor went belly up for 10% of that price and we are selling em for

$18.95 NEW IN BOX TESTED

AC power cable (3 Wire) for above **$2.50**

Circle No. 19 on Reader Service Card

COMPUTER PARTS GALORE INC.
316 College St.
Toronto, Ontario M5T 1S3

Toll Free Orders Only
1-800-387-1385
Order Checking (416)925-8291
Technical Data (416)925-1105

MAIL ORDERS: We accept VISA; MC; AMEX; credit cards. Money orders, cheques (2 week wait) are also OK. Minimum packing and handling fee $5.00 or 5%, whichever is larger. The only COD we use is via CANPAR (Add $4.00 COD fee) or motor freight. We do not use postal COD at all. All Ont. res. add 7%. All prices are subject to change without notice. Returns are subject to a 20% restocking charge.

MBE-XT
AN IBM® XT Compatible 8 Slot Motherboard

MBE-XT BARE PCB WITH MANUAL AND SCHEMATICS.
$49.95

LAZY BOARD

What is your time worth?? We have had a bunch of MBE-XT boards stuffed and wave soldered so you can save all that time soldering them up. All you need are the IC's memory and BIOS and you are set to go 169.00

FULLY WIRED AND TESTED WITH 64K ON BOARD WITH MEGABIOS AND MANUAL
$365.00

- 8088 16 Bit Microprocessor
- 8087 Math Processor Optional
- Up to 256K Dram on Board
- Has Digital Delay Line for Error Free Memory Refresh
- 8 IBM Compatible Expansion Slots
- 4 DMA and Timer Channels
- 64K/128K Eproms Jumper Selectable
- Will run any Compatible BASIC
- IBM Power Plug Compatible
- Same PCB size as IBM XT
- Runs PC-DOS and CPM-86
- Compatible BIOS in stock

DTC MEGA-BOARD

DTC DISPLAY TELECOMMUNICATIONS CORPORATION — NEW!

CHERRY IBM® $124.00 STYLE KEYBOARD

At last a good low cost keyboard for the IBM PC, XT or compatible machine. Uses capacitive keys, has a very good feel", and has TYPEWRITER LAYOUT for easy word-processing at the very low price of **$124.00**

MEGA BIOS

The amazing MEGABIOS® from DTC of Dallas. A fully rewritten BIOS that allows you to make a fully compatible legal system. Note they do not ask MEGABUCKS® for it, only ... $29.95

TAIWAN BIOS, not as good or 100% compatible but it will get you running and save you bucks $19.95

TAIWAN BASIC, in 4 2764 EPROMS $49.95

IBM BARE PCB

(A) Color Graphics (Persyst)	$27.95
(B) Monochrome graphics	$24.95
(C) Disc controller	$17.95
(D) Disc controller + Printer	$24.95
(E) Disc controller + Game	$24.95
(F) IO + 2 I/O clock etc.	$24.95
(G) Multifunction card 11 function	$24.95
(H) AST SIXPACK COPY	$34.95
(I) Parallel printer	$17.95
(J) RS-232 card	$17.95
(K) Simple modem card	$17.95
(L) Disc for above	$ 8.00
(M) 512K card	$24.95
(N) 256K short card	$19.95
(O) IBM 6" extender for service	$19.95
(P) WW Proto, full sized with DB 9 & DB25 footprint	$24.95
(Q) WW Memory proto, full sized with 256K (1Meg) memory laid out on one end with DB 9, DB25 footprint	$29.95
(R) 512K Mapping PROM	$12.95
(S) Multifunction PROMS(2)	$24.95
(T) 2732 for color graphic	$10.00

All cards come with a detailed parts list and placement drawing, we also have all parts needed for them.

MBE-XT

MBE-XT Motherboard, wave soldered with no IC's at all with manual and schematics $169.00

As above with 64K, no BIOS, tested with all IC's and fully burned in, 8 Slots $325.00

BASIC SYSTEM, MBE-XT, A & T with 256K with one 360K drive & controller with power supply, hinged lid case and MEGA-BIOS $895.00

MBE-XT SYSTEM +. The fully loaded MBE-XT system with 256K on board, BIOS, Cherry keyboard, color graphics, 2-360K DSDD Drives with controller and serial, parallel ports, calendar, clock and many more small features, fully tested, ready to go $1599.00

MEGABOARD

MEGABOARD Motherboard, Wave soldered with no IC's at all with parts list and schematics $195.00

MEGABOARD Motherboard, Wave soldered with all IC's and 64K on board with schematics and test data, no BIOS but fully burned in and tested with one $399.00

BASIC SYSTEM, MEGABORD, A & T with 256K (256K DRAMS) with one 360K DSDD Drive & controller with power supply and hinged lid case, and megabios $895.00

MEGABOARD SYSTEM +. The fully loaded MEGABOARD with 640K on board (256K & 64K DRAM) with 2-360K DSDD drives and controller, color graphics board, with serial, parallel, clock, calendar and many small features fully tested and ready to go $1999.00

IBM CASE

We have the nicest case of all the various competing cases, ask any friend who has bought someone else's case and then has seen ours. The lid is hinged with pushbutton access. The back is cut for 8 XT slots and it comes with all the case back inserts for cards, card guides, blind disc filler plates, standoffs, feet, screws, all for . $89.95

Please specify back or side cutour for power supply.

We also have an economy version ABS case, visually exactly the same, but of cheaper build $69.95

We also have an IBM 8 Slot/6502 Board dual duty case for making IBM look-a-like 6502 systems $69.95

MEGABOARD CASE, similar to the above, but no pushbuttons or hardware, from DTC in Dallas Texas. A stronger US made case, but less finishing parts. Fits the MEGABOARD exactly with side cut extender, for back power supply $99.00

SWITCHING POWER SUPPLY

110V, 60Hz with Fan and two rear switched outlets.

These power supplies fit our cases

100 WATT +5V-10A; + 12v-3.5A; ± 12V-1/2A $139.00

130 WATT +5V-14A; + 12v-4.2A; ± 12V-1/2A $169.00

Please specify, side or back switch

8" DRIVE SWITCHING POWER SUPPLY

$39.95

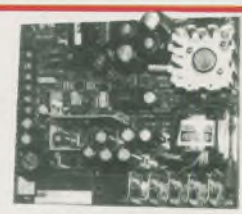

The greatest 8" Drive supply we have ever found. Has 24V-2.2A 5V-3A and -12V-.17A. All you need for a dual 8" Drive system. A switching power supply by ASTEC . . . $39.95

PARTS, PARTS, PARTS, PARTS, PARTS

Hard to get parts for your IBM compatable (8088) systems and peripherals

8088 CPU	$14.95
8087 Math Processor	$219.00
8237A-5 Prog. DMA Cntrl.	$14.95
8250 Serial Port	$11.50
8253A-5 Prog. Interval timer	$7.50
8255A-5 P.I.A.	$6.95
8259A Prog. Interrupt Cntrl.	$6.95
8284A ADC clock gen & driver	$7.75
8288 Bus Controller	$15.50
8272 Floppy Disk Controller	$14.95
NEC 765 Floppy Disk Controller (equivalent to 8272)	$14.95
Set of 8088, 8255A-5, 8237A-5, 8288, 8284, 8253A-5 and 8259A	$69.00

All parts (except NEC765) are prime parts made by Intel.

DELAY LINES

100ns delay line	$6.00
7ns delay line	$13.95
62 pin edge con (high quality)	$2.40
5 pin Din conn	$1.25
Power conn	$1.25
Dip switch 8 pos	$2.49
4.7k x 6 sip	$ .69
4.7k x 8 pin sip	$ .69
8.2k or 10k 16 pin Resistor or network	$ .99
33ohm x 8 network	$1.10
Small speaker	$1.99
.1 uf 50V high quality bypass capacitors	$ .10
Trimcap	$ .99
34 pin card edge con. for your floppy controller	$5.95

LS for IBM Systems

00	$0.39
02	$0.39
04	$0.39
08	$0.39
10	$0.45
20	$0.45
27	$0.45
30	$0.45
32	$0.80
74	$0.50
138	$0.70
158	$0.75
175	$0.80
243	$1.20
244	$1.25
245	$1.50
273	$1.50
322A	$6.00
323	$3.50
373	$1.40
374	$1.40
377	$1.25
670	$1.75
7407 TTL	$1.00

S SERIES

S00	$0.75
S02	$0.75
S04	$0.75
S08	$0.75
S74	$0.85
S138	$1.75
S157	$1.85
S158	$1.85
S374	$3.25

MISC

75477	$1.25

Hard to get parts for your 6502 Systems and Apple Compatible Peripherals.

6502 CPU	$ 5.50
6845 CRT controller	$ 9.50
68A45 CRT controller	$ 9.95
Z80A CPU (4 MHz)	$ 4.99
MC3242	$11.95
74LS367	$ .62
74LS259	$ 1.39
74LS161	$ .99
74S74	$ .82
74S174	$ 1.70
74LS323	$ 4.55
Card edge connector (50 pin)	$ 2.49
RCA jack PC mount	$ .69
6 pin power square connector	$ .99
Phono jack (small)	$ .99
MPSA 13 trans	$ .55
2N3904 trans	$ .19
2N3906 trans	$ .27
MPSU51 trans	$ .79
2N4258 transistor or equiv	$ .69
1K SIP 10 pin	$ .69
1K SIP 8 pin	$ .69
10K SIP 10 pin	$ .75
4 pos dip sw	$ .95
20 pin female header for disk drive	$ 1.79
20 pin male	$ 1.69
50 pf trim cap	$ .89
220 ohm trimpot	$ .69
20 conductor ribbon cable	$ .89/ft.

MONOLITHIC CAPS

MONOLITHIC CERAMIC CAPS
We bought 100,000 of em dirt cheap, they are very good quality, 63V, 0.2" lead spacing. Now only 10¢ ea.

50 pcs.	$ 5.00
100 pcs.	$ 9.00
1000 pcs.	$85.00

more? ask!

WE'VE GOT EM!

5-1/4" HALF SIZE DRIVES! For IBM PC, TI PC, XEROX 820

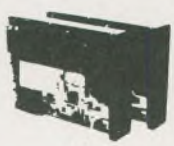

Shugart/Panasonic ½ size SA455-3AEC $189.00

TEAC (A Cadillac Drive) ½ size FD55B $189.00

Canon MDD210 2/3 size, a real buy with, red/green led, head load and door relay. With all data $129.00

- 40 Track per side 48 TPI
- Double-sided, double density
- Same as SA455
- Latest head & drive technology
- Fast access time

TEAC

TEAC .....the nicest drive FD55F ..... $219.00 with free DOS patch for 80 track.

- 80 Track per side 96 TPI
- Double sided, quad density
- Same as SA465
- Latest head & drive technology
- Fast access time

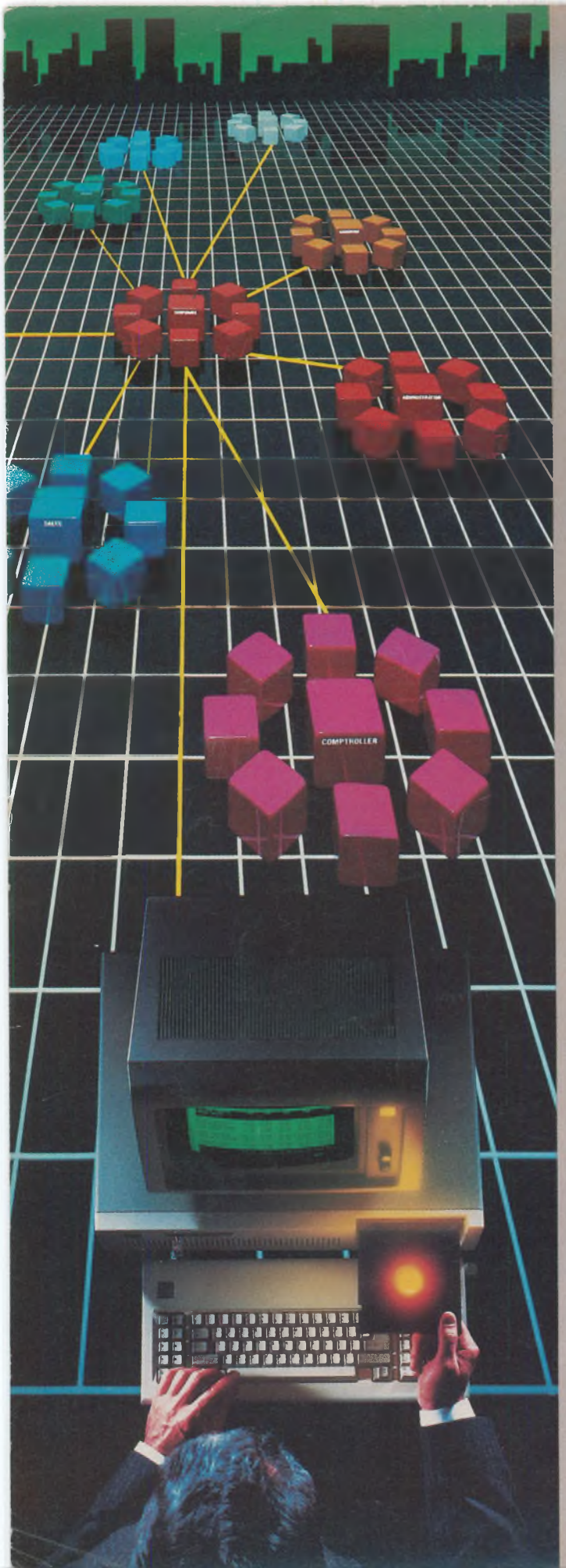

We've Put a Local Area Network on a Disk

Corporate Information Sharing. It's been described as the key to increasing a company's productivity. It's also why large networks of PC's are becoming more and more common in the workplace...in spite of the fact that they're costly, difficult to install, and incompatible with much existing software.

Finally, there's a solution to this corporate dilemma. Its name is LANLink™

A Software-Driven LAN That Uses Standard, RS-232 Ports. A major breakthrough in local area networks, LANLink™ uses your computers' existing serial ports and runs under PC-DOS.

Because all of the intelligence the network requires is on the server and satellite diskettes, expensive network interface boards aren't required.

A Powerful Network That's Cost-Conscious. If you've been pricing board-driven LAN's, you already know that they can cost over $1,000 per workstation.

LANLink™ is different.

Boasting a data transfer rate in excess of 100,000 BPS, LANLink™ is compatible with a wide range of programs. And because special boards aren't required, installation costs are one-third that of a traditional network.

A Network Designed the Way Business Works. With LANLink,™ you're able to customize your network along departmental lines using a data-sharing hierarchy and password-protected access.

Get Started With LANLink™ TODAY. Call The Software Link TODAY for complete details and the authorized dealer nearest you. The LANLink™ Starter Kit, priced at $745, comes complete with network software for both a server and a satellite computer. For a limited time, 50 feet of RS-232 cable will be included free of charge.

LANLink™ is immediately available and comes with a money-back guarantee. VISA, MC, AMEX accepted.

Circle No. 39 on Reader Service Card.

LANLink™

THE SOFTWARE LINK, INC.

Developers of MultiLink™ and MultiLink Advanced™

400 Esna Park Drive, Suite 18, Toronto (Markham), Ont. L3R 3K2

CALL: 416/477-5480

Dealer Inquiries Invited

MultiLink, MultiLink Advanced & LANLink are trademarks of The Software Link, Inc. PC-DOS is a trademark of IBM Corp.