By Richard Davis G3TDL

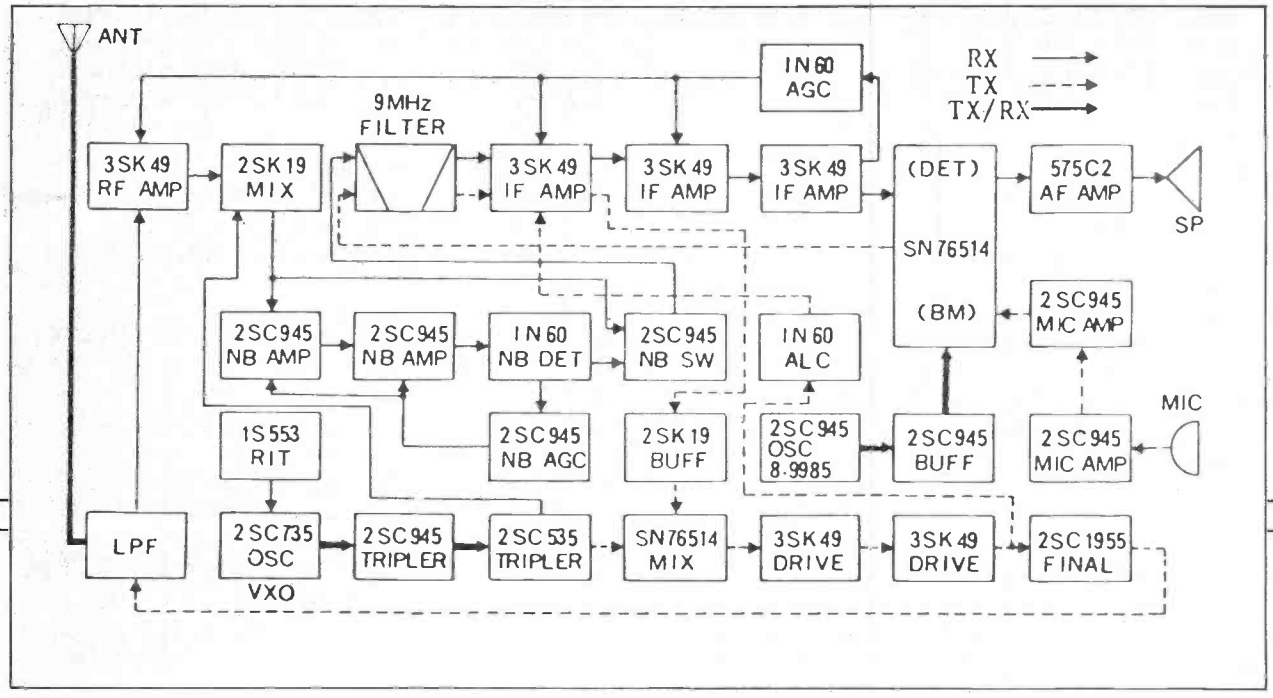

connected in parallel with the main tuning capacitor. The output from the oscillator is passed through two frequency triplers to produce the 135 MHz local oscillator signal for the receive and transmit mixers. The noise blanker operates on the IF signal at the output of the receive mixer. The signal is first amplified by two bipolar stages, and then rectified to produce a fluctuating DC signal which is fed to the base circuits of two further transistors, one of which contains a CR network to reduce the rise time. These two stages control the biasing of the two ends of a diode connected in series with the signal path. For slowly changing signals the two transistors will turn on and off at about the same rate, keeping the bias on both ends of the diode in step so that the diode remains on. Fast rising pulses, such as ignition noise, will turn on one transistor faster than the other due to the presence of the CR network, and this will cause the diode to be biased off momentarily, preventing the interfering pulse from reaching the SSB filter. At least that's the theory.

For CW transmit operation the mic amp is switched off and a DC voltage is applied to the AF input port of the balanced modulator, thus unbalancing it and introducing carrier. A trimmer capacitor in series with the carrier crystal is also removed, moving the frequency HF into the passband of the SSB filter. Keying is carried out in the source lead of the second transmit buffer.

Construction

The *SB-2X* is housed in a metal case measuring 120 × 56 × 188 mm. Like that of the *TR2200*, this case forms a removable sleeve secured by two 'popper' type plastic clips on the rear panel. This arrangement makes for quick and easy access to the internal circuitry, but Mizuho have tried to squeeze rather a lot into the available space with the result that the case is quite a tight fit and slightly tricky to refit once removed. The front panel carries, nearly centrally, the main tuning knob, 28mm in diameter, which operates a green on black tuning scale via a slow motion drive. This scale is marked in 10kHz divisions, and can be back illuminated by a pilot light operated by a push button and ten second timer. To the right of the tuning knob are the volume and RIT controls, the push button for the pilot light and LEDs to indicate that the RIT and noise blanker are in use. These LEDs, incidentally, are rather bright, and the values of their series resistors could be increased with advantage since, as will be mentioned later, one of the bad points of the *SB-2X* is its rather high power consumption.

To the left of the tuning dial are the crystal selector switch and a small 'edgeways' meter, which indicates signal strength on receive and RF volts out on transmit. As is usual for a rig of this type, it simply indicates received signal voltage, with the result that the S-unit scale on it is somewhat meaningless and should be ignored! I was also surprised to find that no provision had been made for checking the state of the batteries; obviously a modification is called for here. To the left of the meter and crystal switch are the mic socket (standard Japanese 4-pin), a slide switch for switching on the RIT, and a telescopic whip antenna. This is removable in the manner of that on the TR2300 since, as the handbook says, an "optional helical rubber duckie antenna is avairable" (sic).

On the rear panel are mounted the external power connector, a standard transistor radio type with, I am glad to say, the live side connected to the centre pin (unlike the *FT290*), the key jack, which is a standard 3.5 mm jack socket, and a 1mm socket for the contol of a linear. This latter is a useful feature, although as wired it provides volts on transmit and no volts on receive; not only is this incompatible with the Microwave Modules range of linears, which require an earth on transmit, but it also means that this socket cannot be used as an external PTT connection, for example for a foot switch, which, as will be explained later, is more or less essential for CW operation with this rig. Next to the key jack are two miniature slide switches, one to switch on the noise blanker (a rather inconvenient place to put it), and the other to select SSB or CW operation. The rear panel layout is completed by a two pin socket for the