Easy to build projects for everyone

Everyday ELECTRONICS

MARCH 83
80p

FREE WIRE BENDING GAUGE

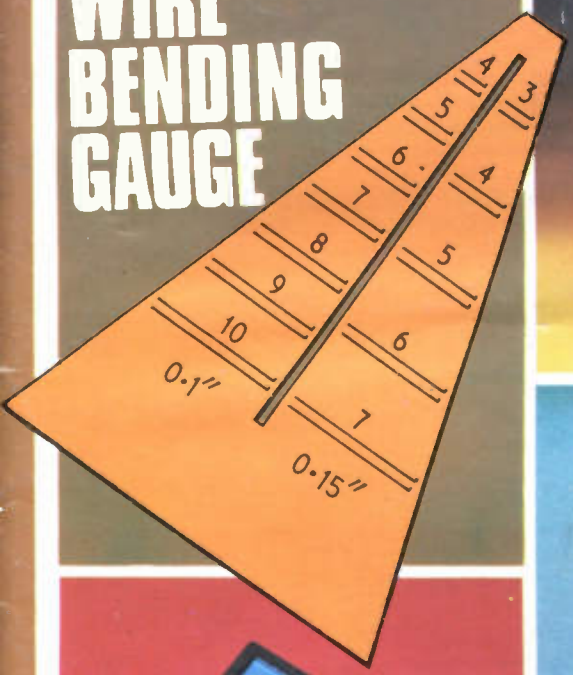

TEST GEAR 83 DUAL POWER SUPPLY

FIRST of NEW SERIES

EXPANDED KEYBOARD for the ZX81

Car Thermometer

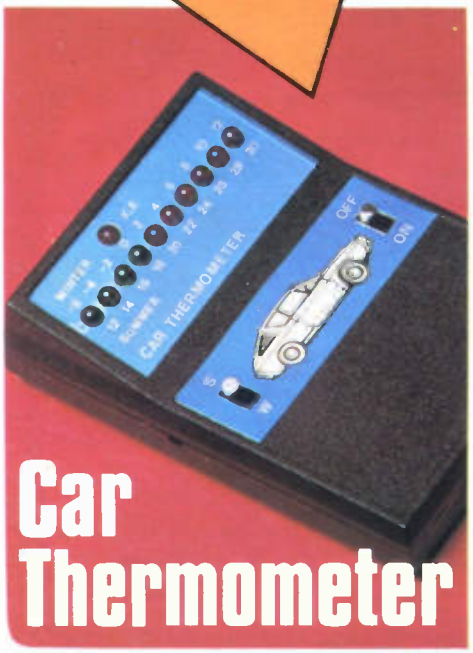

MULTI-STATION INTERCOM

Australia $1·35 Malaysia $4·95 IR £1·19 (inc. V.A.T.)

electronize

AUTO-ELECTRONIC PRODUCTS

KITS OR READY BUILT

ELECTRONIC IGNITION

IS YOUR CAR AS GOOD AS IT COULD BE ?

★ Is it **EASY TO START** in the cold and the damp? Total Energy Discharge will give the most powerful spark and maintain full output even with a near flat battery.

★ Is it **ECONOMICAL** or does it "go off" between services as the ignition performance deteriorates? Total Energy Discharge gives much more output and maintains it from service to service.

★ Has it **PEAK PERFORMANCE** or is it flat at high and low revs. where the ignition output is marginal? Total Energy Discharge gives a more powerful spark from idle to the engines max. (even with 8 cylinders).

★ Do the **PLUGS** and **POINTS** always need changing to bring the engine back to its best. Total Energy Discharge eliminates contact arcing and erosion by removing the heavy electrical load. The timing stays "spot on" and the contact condition doesn't affect the performance either. Larger plug gaps can be used, even wet or badly fouled plugs can be fired with this system.

★ Is the **PERFORMANCE SMOOTH.** The more powerful spark of Total Energy Discharge eliminates the 'near misfires' whilst an electronic filter smooths out the effects of contact bounce etc.

Most **NEW CARS** already have **ELECTRONIC IGNITION.** Update **YOUR CAR** with the most powerful system on the market - 3½ times more spark power than inductive systems - 3½ times the spark energy of ordinary capacitive systems, 3 times the spark duration.

Total Energy Discharge also features:
EASY FITTING, STANDARD/ELECTRONIC CHANGEOVER SWITCH, LED STATIC TIMING LIGHT, LOW RADIO INTERFERENCE, CORRECT SPARK POLARITY and DESIGNED IN RELIABILITY.

★ **IN KIT FORM** it provides a top performance system at less than half the price of competing ready built units. The kit includes: pre-drilled fibreglass PCB, pre-wound and varnished ferrite transformer, high quality 2μF discharge capacitor, case, easy to follow instructions, solder and everything needed to build and fit to your car. All you need is a soldering iron and a few basic tools.

FITS ALL NEGATIVE EARTH VEHICLES
6 or 12 volt, with or without ballast.
OPERATES ALL VOLTAGE IMPULSE TACHOMETERS:
(Older current impulse types need an adaptor).

STANDARD CAR KIT £15·90
Assembled and Tested £26·70

TWIN OUTPUT KIT £24·55
For Motor Cycles and Cars with twin ignition systems
Assembled and Tested £36·45

PLUS P. & P. £1 (U.K.) Prices include VAT

PROTECT YOUR CAR WITH AN ELECTRONIZE ELECTRONIC ALARM

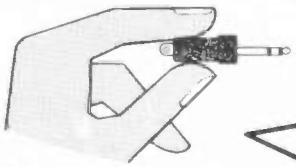

Don't Wait Until Its too Late ~ Fit one NOW!

★ **2000 COMBINATIONS** provided by an electronic key - a minature jack plug containing components which must match each individual alarm system. (Not limited to a few hundred keys or a four bit code).

★ **60 SECOND ALARM PERIOD** flashes headlights and sounds horn, then resets ready to operate again if needed.

★ **10 SECOND ENTRY DELAY** allows owner to dis-arm the system, by inserting the key plug into a dashboard mounted socket, before the alarm sounds. (No holes in external bodywork, fiddly code systems or hidden switches). Re-closing the door will not cancel the alarm, before or after it sounds, the key plug must be used.

★ **INSTANT ALARM OPERATION** triggered by accessories or bonnet/boot opening.

★ **30 SECOND DELAY** when system is armed allows owner to lock doors etc.

★ **DISABLES IGNITION SYSTEM** when alarm is armed.

★ **IN KIT FORM** it provides a high level of protection at a really low cost. The kit includes everything needed, the case, fibreglass PCB, CMOS IC's, random selection resistors to set the combination, in fact everything down to the last nut and washer plus easy to follow instructions.

FITS ALL 12 VOLT NEGATIVE EARTH VEHICLES.
SUPPLIED COMPLETE WITH ALL NECESSARY LEADS AND CONNECTORS PLUS TWO KEY PLUGS

CAR ALARM KIT £24·95

ASSEMBLED AND TESTED £ 37·95

PLUS P. & P. £1 (U.K.) Prices include VAT

VISA

Access and Visa Welcome. Write or Phone Quoting Number

ELECTRONIZE DESIGN
Dept. C · Magnus Rd · Wilnecote
Tamworth · B77 5BY
tel: 0827 281000

VOL. 12 NO. 3 MARCH 1983

Everyday ELECTRONICS

PROJECTS . . . THEORY . . . NEWS . . .
COMMENT . . . POPULAR FEATURES . . .

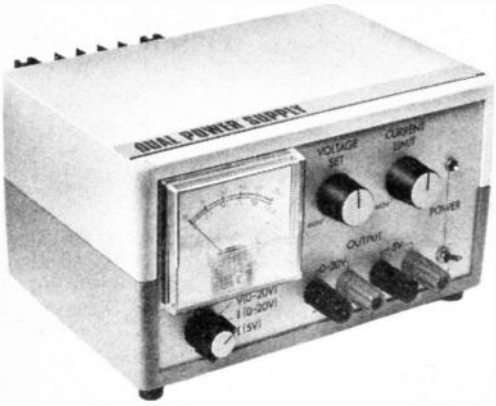

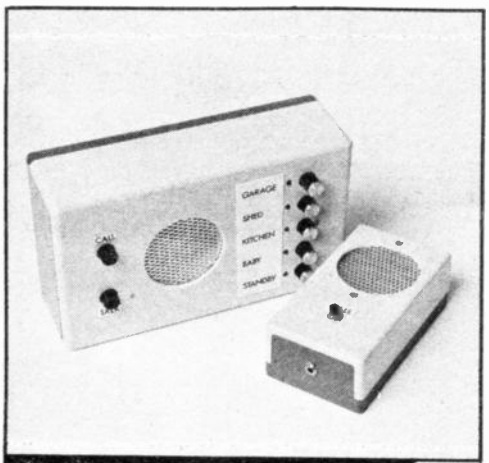

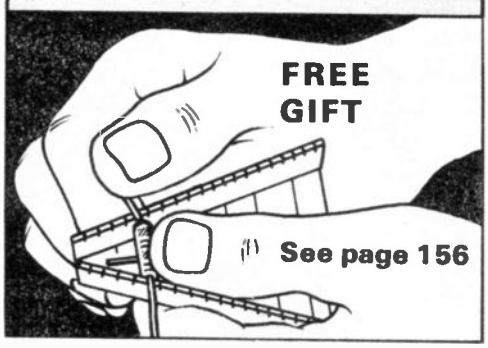

© IPC Magazines Limited 1983. Copyright in all drawings, photographs and articles published in EVERYDAY ELECTRONICS is fully protected, and reproduction or imitations in whole or in part are expressly forbidden.

PROJECTS

MULTI-STATION INTERCOM by T. Rule — 138
Keep in touch around the home

CAR THERMOMETER by M. Plant — 150
Monitor the outside air temperature

BUZZ OFF! by T. R. de Vaux-Balbirnie — 154
A game for a steady hand

TEST GEAR 83—DUAL POWER SUPPLY by J. R. W. Barnes — 159
Variable output: 0 to 20V. Fixed output: 5V 1A for powering TTL

EXPANDED ADD-ON KEYBOARD FOR THE ZX81 by J. M. Stejskal — 170
For speedier program entry

EPROM PROGRAMMER FOR THE ACORN ATOM by D. C. Grindrod — 178
Part 2: Construction and software

SERIES

INTRODUCING ELECTRONICS by George Hylton — 146
Part 6: Digital Electronics

THE ELECTRONICS OF INFORMATION TECHNOLOGY by T. Ivall — 166
Part 5: Information Units

FEATURES

EDITORIAL — 137
Test Gear 83; A Gift For Constructors

SHOPTALK by Dave Barrington — 145
Product news and component buying

WIRE BENDING GAUGE — 156
How to use your free gift

FOR YOUR ENTERTAINMENT by Barry Fox — 158
Why Markets Are Lost; Buying a Home Computer

COUNTER INTELLIGENCE by Paul Young — 165
A retailer comments

CIRCUIT EXCHANGE — 173
A forum for readers' ideas

ACORN ATOM USER'S REPORT by T. J. Johnson — 174
Putting a home computer through its paces

EVERYDAY NEWS — 176
What's happening in the world of electronics

RADIO WORLD by Pat Hawker G3VA — 182
The Electronics Epoch; Crystal-Ball Gazing

FREE WITH THIS ISSUE

EE WIRE BENDING GAUGE (cover mounted)

Our April 1983 issue will be published on Friday, March 18. See page 157 for details.

Readers Services ● Editorial and Advertisement Departments — 137

ONLY

£4.95

"BIG TRAK" MOTORIZED GEARBOX

These units are as used in the "Big Trak" computerized vehicle, and offer the experimenter in robotics the opportunity to purchase the electro-mechanical parts required in building remote controlled vehicles. The unit comprises:

(a) 2 × 3V motors, linked by a magnetic clutch, thus enabling turning of the vehicle;

(b) A gearbox contained within the black ABS housing reducing the final drive speed to approx. 50rpm.

Data is supplied with the unit showing various options on driving the motors, as well as a direction controller circuit, enabling the unit to turn right, left or go straight ahead.

SIMON GAME

. . . is back again. Another supply of ready built PCB's for this flashing light/pulsating tone computerised game is now with us. Supplied tested and working with speaker & instructions. **£4.95.**

REED RELAYS

Manufacturers rejects – DIL and other PCB mounting types. SP, DP and 4P – make, break & c/o contacts. Not tested, may be only partially working or o/c etc, so very low price – pack of 10 assorted **£1**; 25 **£2.00**; 100 **£7.00**

1N4148 – BEST PRICE EVER

Supplied in packs of 100, by Toshiba **£2** per pack; 3 packs **£5.50**; 10 packs **£15**; 25 packs **£32**; 100 packs **£115**.

FERRIC CHLORIDE

New supplies just arrived – 250mg bags of granules, easily dissolved in 500ml of water. Only **£1.15**. Also abrasive polishing block **95p**.

LIE DETECTOR

Not a toy, this precision instrument was originally part of an "Open University" course, used to measure a change in emotional balance, or as a lie detector. Full details of how to use it are given, and a circuit diagram. Supplied complete with probes, leads and conductive jelly. Needs 2 4½V batts. Overall size 155×100×100mm. **Only £9.95**—worth that for the case and meter alone!!

AA NI-CADS – 10 for £9.95

Brand new nickel cadmium batteries by GE, standard 1.2V @ 450mA/H. Professional quality with solder tags both ends. **Special price, £1.40 ea; 10 for £9.95; Box of 80 £65.**

Ni-cad Charger: Charges up to 4 AA, C or D cells + PP3. **Only £7.95.**

BRAND NEW VEROBLOC KIT!!!

Just published by Babani, Mr. R. A. Penfolds new book, "30 SOLDERLESS BREADBOARD PROJECTS" – this book features 30 different projects for assembly on a Verobloc, and the kit contains all parts necessary to make:

- Audio Amplifiers
- Light & Dark Activated Switches & Alarms
- Timers
- Metronome
- Oscillators & Tone Generators
- Warbling Door Buzzer
- Two-tone Train Horn
- Touch Switch
- Reaction Game
- Sound Activated Switch
- Radio Receivers
- Fuzz Unit . . . + lots more!!

The introduction shows all the different components and explains how to use the breadboard. The Verobloc layout is shown for every project together with the circuit diagram and an explanation of how it works. Ideal for beginners in electronics, but also suitable for more advanced students.

The complete kit is contained in an attractive plastic case, which can be divided up into 15 compartments in which your components may be stored.

Complete Kit, including book, Verobloc & all parts **£24.95**; Book only **£2.25**; Kit without Verobloc **£20.45**.

NOW REDUCED TO £3.95

ELECTRO-DIAL

Electrical combination lock–for maximum security–pick proof. 1 million combinations!! Dial is turned to the right to one number, left to a second number, then right again to a third number. Only when this has been completed in the correct sequence will the electrical contacts close. These can be used to operate a relay or solenoid. Overall dia. 65mm×60mm deep. **Only £3.95.**

STABILIZED PSU PANEL

A199 A versatile stabilized power supply with both voltage (0-30V) and current (20mA-2A) fully variable. Many uses inc. bench PSU, Ni-cad charger, gen. purpose testing. Panel ready built, tested and calibrated. **£7.75. Suitable** transformer and pots. **£6.00.** Full data supplied.

GREENWELD

443D MILLBROOK ROAD, SOUTHAMPTON SO1 0HX

All prices include VAT – just add 50p post. Tel. (0703) 772501

TWO FABULOUS OFFERS FROM

ALCON

SUPER 20
20kΩ/V a.c. & d.c.

A SUPER PROTECTED UNIVERSAL MULTIMETER

Undestructible, with automatic protection on all ranges but 10A.

ONLY £33·50

inc. VAT, P&P, complete with carrying case, leads and instructions.

This special offers is a wonderful opportunity to acquire an essential piece of test gear with a saving of nearly £20.00.

Accuracy: d.c. ranges and Ω 2% a.c. 3% (of f.s.d.)
39 ranges: d.c. V 100mV, 1·0V, 3·0V, 10V, 30V, 100V, 300V, 1000V.
d.c. I 50μA, 100μA, 300μA, 1.0μmA,3mA, 10mA, 30mA, 100mA, 1A, 10A
a.c. V 10V, 30V, 100V, 300V, 1000V.
a.c. I 3mA, 10mA, 30mA, 100mA, 1.0A, 10A.
Ω 0–5.0kΩ, 0–50kΩ, 0–500kΩ, 5MΩ, 50MΩ.
dB from −10 to +61 in 5 ranges.
Dimensions: 105 × 130 × 40mm.

TESTER 50 39 ranges

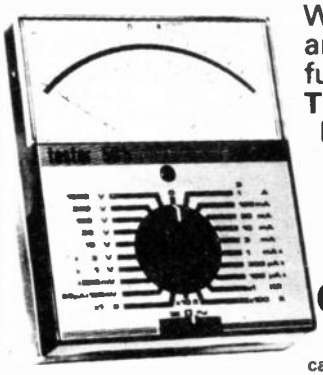

50kΩ V a.c. and d.c.
With protective diodes and quick-acting 1·25A fuse.

THE PROFESSIONAL SOLUTION TO GENERAL MEASUREMENT PROBLEMS

ONLY £36·30

incl. VAT, P&P, complete with carrying case, leads and instructions. Goods normally by return of post.

The best instrument for the workshop, school, toolbox, TV shop and anywhere accurate measurement is needed quickly and simply.

Accuracy: d.c. ranges and Ω 2% a.c. 3% (off.s.d)
39 ranges: d.c. V 150mV, 1V, 3V, 10V, 30V, 100V, 300V, 1000V;
d.c. I 20μA, 100μA,300μA, 1·0mA, 3mA, 10mA, 30mA, 100mA, 1A, 3A.
a.c. V 10V, 30V, 100V, 300V, 1000V;
a.c. I 3mA, 10mA, 30mA, 100mA, 1A, 3A.
Ohms 5kΩ, 50kΩ, 500kΩ, 5MΩ, 50MΩ.
dB from −10 to +61 in 5 ranges.
Dimensions: 105 × 130 × 40mm.

For details of these and the many other instruments in the Alcon range, including multimeters, components measuring, automotive and electronic instruments, please write or telephone:

ALCON Instruments Ltd.

19 MULBERRY WALK · LONDON SW3 6DZ · TEL: 01-352 1897 · TELEX: 918867

CRICKLEWOOD ELECTRONICS LTD.

40 Cricklewood Broadway, London NW2 3ET tel 01-452 0161 tlx 914977

This is a small list from our vast stocks. Full price list free on request. You may order by phone quoting Access, Visa or American Express no., or by nominal mail order. Callers welcome. All in stock items (95% ex stock) go out same day. Please add 15% VAT & 70p p&p. Govt Depts, schools, etc. orders welcome. Overseas orders no VAT but allow extra p&p. Qty discounts negotiable.

ALL STOCK BRAND NEW FRANCHISED ORIGIN

CRICKLEWOOD—STOCKING PARTS OTHER STORES CANNOT REACH

SUPERIOR QUALITY CARBON FILM RESISTORS, HI STAB LOW NOISE
¼W 10Ω 1MΩ 5% E24 2p
½W 10Ω 10MΩ 5% E24 3p
1W 10Ω 10MΩ 5% E12 6p
2W 10Ω 10MΩ 5% E12 15p

METAL OXIDE/FILM RESISTORS
Very high thermal & electrical stability. Extremely low noise
0.4W 10Ω 1MΩ 2% E24 6p
0.4W 10Ω 1MΩ 1% E24 8p

LOW OHMIC VALUE RESISTORS (½W OR ¼W)
0.22Ω 8.2Ω E12 11p

WIREWOUND RESISTORS 5%
2.3W 0.22Ω 330Ω E12 28p
4.7W 0.47Ω 6K8 E12 32p
10.11W 1.0Ω 33K E12 37p

Rechargeable Batteries
Guaranteed minimum 500 charges
HP2(2AH) 2.10
HP2(4AH) 4.75
HP7(½AH) 99p
HP11(1.2AH) 2.29

Chargers
TYPE H Adjustable to 8 of any HP type Above £15.59
TYPE P PP3 £5.50
TYPE A HP7 (Up to 4 at a time) £5.86

GRAPHIC PROCESSORS
EF9365 £44
EF9366 £44

LOW NOISE ROTARY POTS
E3 Series
4.7K 2M Lin 32p
4.7K 2M Log 32p
As above with DP switch 80p
As above but stereo (no switch) 90p

MICRO MINI 100V CERAMIC PLATE CAPS
5% or better
E12 Series
1pF 10nF 7p
DISCOUNTS ON QUANTITY PLEASE PHONE

SIEMENS POLY C
5% 7.5mm 250V CAPACITORS E12
1nF 68nF 10p
82nF 150nF 15p

5% 7.5mm 100V CAPACITORS E12
100nF 180nF 12p
220nF 270nF 15p
330nF 390nF 20p
470nF 560nF 27p
680nF 32p
1μF (10mm) 36p
Complete range of other voltages & spacings in stock. Please phone

TANTALUM BEADS
1/35V 14p
22/35V 14p
33/35V 14p
47/35V 14p
68/35V 14p
1.0/35V 14p
2.2/16V 14p
2.2/35V 22p
3.3/35V 22p
4.7/16V 22p
4.7/35V 24p
6.8/25V 26p
6.8/35V 25p
10/16V 25p
10/35V 34p
15/10V 22p
15/16V 30p
15/25V 32p
22/6.3V 26p
22/16V 32p
33/10V 38p
47/6.3V 43p
100/3V 37p

Feedthrough Capacitor
1000pF 500V 7p

Fully enclosed Piher Pre-sets
E 3 Series 100Ω 10M
Mini Vert 14p
Mini Horiz 14p
Standard Vert 17p
Standard Horiz 17p
Thumbwheel or ¼" Spindle for Standard Pre sets only 8p

C280 or Equiv Polyester Caps Radial Long Leads
10nF 15nF
22nF 33nF
47nF 68nF
100nF 9p
150nF 220nF 11p
330nF 470nF 14p
680nF 1μF 24p
1.5μF 2.2μF 44p

Veroboard 0.1" Copper Clad
2.5 × 3.75 72p
2.5 × 5 80p
3.75 × 3.75 80p
3.75 × 5 83p
2.5 × 17 2.50
3.75 × 17 3.30
4.79 × 17 4.20
VQ Board 1.50
Dip Board 3.25
Track Cutter 1.15
Pin Insertor 1.59
100 Pins 50
Verobloc 3.70
Vero Wiring Pen + Spool 3.00
Spare Spool 72p
Combs 6p

BOOKS (no VAT) (Post inc. prices)
Towers Transistor Manual (Bible) 10.50
TTL Data 3.95
Data conversion 4.50
Volt. Reg. Data 3.95
Interface Data 3.95
Memory applic 4.95
Audio Radio Hbk 4.50
Special function handbook 3.95
Texas Data Book in stock send for free list

Quality Electrolytics
By Matsushita or Siemens (other good makes may be sent only in the rare event of supply difficulty)

AXIALS

uFd	V	
47	63	8p
47	100	9p
47	350	30p
1	63	8p
1	100	9p
1	500	40p
2.2	25	8p
2.2	63	9p
2.2	100	11p
2.2	350	30p
3.3	25	10p
3.3	40	11p
3.3	63	12p
4.7	16	8p
4.7	25	9p
4.7	40	11p
4.7	63	12p
4.7	100	14p
10	25	8p
10	40	12p
10	63	14p
10	100	16p
22	25 RCA	185
22	40	14p
22	63	14p
22	100	21p
47	25	14p
47	40	17p
47	63	26p
47	100	28p
68	25	18p
68	63	25p
100	16	14p
100	25	16p
100	40	22p
100	63	25p
100	100	30p
220	10	16p
220	16	17p
220	25	22p
220	40	25p
220	63	30p
220	100	40p
330	16	19p
330	25	22p
330	63	38p
470	16	22p
470	25	28p
470	40	33p
470	63	43p
470	100	60p
1000	16	30p
1000	25	38p
1000	40	46p
1000	63	66p
2200	16	40p
2200	25	63p
2200	40	70p
2200	63	134p
4700	16	75p
4700	25	90p

Beautiful Mini Radial Low Voltage
Matsushita only

uFd	V	
10	16	6p
22	10	6p
22	16	7p
47	10	7p
47	16	8p
100	10	9p
100	16	10p
220	10	11p
220	16	12p
470	10	17p
470	16	18p
1000	10	20p
1000	16	24p
2200	10	34p
2200	16	44p

Grade One Glass PCB
Single Sided
178 × 240mm 95p
420 × 195mm 130p
420 × 245mm 195p

Ferric Chloride 60% Solution 250ml bottle £1.60

ETCH RESIST TRANSFERS
1 Thin lines
2 Thick lines
3 Thin bends
4 Thick bends
5 DIL pads
6 Transistor pads
7 Dots + holes
8 0.1" edge cons
9 Mixture
Any sheet of above 30p
Set of 13 sheets £3.00

PHOTO SENSITIVE PCB
1st Class Epoxy Glass. For better results than spraying. Expose to UV
Single sided
100 × 160 1.56
100 × 220 1.90
203 × 114 1.86
233 × 220 3.99
Double sided
100 × 160 1.66
100 × 220 2.15
203 × 114 2.21
233 × 220 4.56
Developer for above (do not use Sodium Hydroxide) 500ml 2.50

DALO ETCH RESIST PEN
+ spare nib 90p

ANTEX SOLDERING IRONS
C240 (15W) 4.59
X25 (25W) 4.99
Iron stand 1.66
C240 Element 1.99
X25 Element 2.08
Bits C240
No2 (Small) 66p
No3 (Med) 66p
No6 (Lge) 66p
Bits X25
No50 (Small) 66p
No51 (Med) 66p
No52 (Lge) 66p

SOLDER 125gms
18 swg 2.96
22 swg 3.10

VALVES
DY86/87/802 1.32
ECC82 1.22
ECC83 1.22
ECC84 1.22
EF86 1.80
EL34 2.89
EL84 2.50
KT66 10.75
KT88 12.50
PC900 1.76
PCC84 3.00
PCC85 3.40
PCC89 1.89
PCF86 2.30
PCF201 3.00
PCF801 2.57
PCF802 2.11
PCL82 1.80
PCL85 2.20
PCL86 2.10
PCL805 2.20
PD510 4.95
PFL200 2.99
PL504 2.11
PL508 2.36
PL519 7.75
PL802 4.17
PY88 1.62
PY500A 2.63
6L6 2.59
6S27 2.59
6V6 2.59

Wire & Cable
Prices per metre
Solid Hook up Wire Any colour 5p

Mains Speaker Cable (per metre)
Twin 1 amp 14p
Twin 2½ amp 16p
3 Core 2½ amp 18p
3 Core 6 amp 31p
3 Core 13 amp 56p

Solid Multicore
4 Core 33p
8 Core 39p
12 Core 46p
50 Core 1.37

Screened Cable
Single 14p
Stereo 27p
Mini Single 12p
Mini Stereo 15p
4 Core 4 Screens 44p
4 Core 1 Screen 54p
8 Core 61p
12 Core 80p

Aerial Cable
50Ω RG58A 36p
75Ω UHF 36p
75Ω VHF 28p
300Ω Flat 14p

Rainbow Ribbon Cable
10 Way 84p
24 Way 186p
40 Way 270p

Glass fuses range 1 to 5 amps, state value in amps and we send nearest above
1-2.5 amp slow 17p
1-2.5 amps quick 10p
20 mm slow 17p
20 mm quick 10p

ICE, MULTI-METERS
Microtest 80 £16.00
Supertest 680R £32.00
Pocket size Multimeter

TRANSISTORS
Probably the largest retail variety in UK. If you don't see what you want please phone or write as this is not a full list.

2N404 1.50
2N914 20p
2N916 39p
2N917 65p
2N918 33p
2N929 36p
2N929A 45p
2N930 20p
2N930A 30p
2N1893 30p
2N1974 1.50
2N2060 7.14
2N2102 38p
2N2217 38p
2N2218 33p
2N2218A 25p
2N2219 27p
2N2219A 28p
2N2220 22p
2N2221 22p
2N2221A 23p
2N2222 24p
2N2222A 25p
2N2223 2.80
2N2223A 4.15
2N2303 38p
2N2368 25p
2N2369 19p
2N2369A 18p
2N2646 46p
2N2647 98p
2N2904A 27p
2N2905 28p
2N2905A 29p
2N2906 25p
2N2906A 30p
2N2907 25p
2N2907A 26p
2N2920 3.47
2N2923 25p
2N2924 15p
2N2925 15p
2N2926 10p
2N3019 50p
2N3053 27p
2N3054 54p
2N3055RCA 80p
2N3055H 1.20
2N3108 42p
2N3109 48p
2N3232 1.50
2N3250 36p
2N3251 36p
2N3439 98p
2N3440 80p
2N3441 1.25
2N3442 1.35
2N3442RCA 1.85
2N3444 1.70
2N3445 4.80
2N3446 6.09
2N3447 5.72
2N3448 6.56
2N3468 1.00
2N3512 1.06
2N3553 2.30
2N3632 9.88
2N3638 35p
2N3638A 37p
2N3694 30p
2N3702 10p
2N3703 10p
2N3704 10p
2N3705 10p
2N3706 10p
2N3707 10p
2N3708 10p
2N3709 10p
2N3710 10p
2N3711 10p
2N3712 2.00
2N3713 1.38
2N3714 2.98
2N3715 3.31
2N3716 3.60
2N3819 21p
2N3820 38p
2N3821 1.84
2N3822 80p
2N3823 46p
2N3824 1.70
2N3860 31p
2N3866 80p
2N3877A 38p
2N3902 6.66
2N3903 15p
2N3904 18p
2N3905 18p
2N3906 18p
2N4030 66p
2N4031 56p
2N4032 65p
2N4036 58p
2N4037 43p
2N4239 1.00
2N4240 3.00
2N4347 2.26
2N4351 1.18
2N4400 15p
2N4401 27p
2N4402 30p
2N4403 30p
2N4409 36p
2N4410 42p
2N4427 79p
2N4440 12.50
2N4870 80p
2N4871 56p
2N4888 92p
2N4898 1.29
2N4901 1.69
2N4902 3.52
2N4903 3.24
2N4904 2.75
2N4905 3.25
2N4906 3.42
2N4907 3.20
2N4908 3.70
2N4909 2.90
2N4918 95p
2N4919 1.28
2N4920 1.34
2N4921 56p
2N4922 69p
2N4923 99p
2N5086 36p
2N5087 39p
2N5088 37p
2N5089 37p
2N5190 68p
2N5191 70p
2N5193 90p
2N5194 79p
2N5209 24p
2N5245 37p
2N5246 40p
2N5247 45p
2N5248 46p
2N5249 48p
2N5266 2.88
2N5293 98p
2N5294 1.28
2N5295 1.37

2N5401 35p
2N5415 1.10
2N5416 1.54
2N5447 16p
2N5448 19p
2N5449 21p
2N5450 23p
2N5451 25p
2N5457 28p
2N5458 29p
2N5459 28p
2N5460 72p
2N5543 5.00
2N5551 37p
2N6082 11.99
2N6121 54p
2N6122 58p
2N6123 59p
2N6124 56p
2N6125 59p
2N6126 71p
2N6129 79p
2N6130 93p
2N6131 98p
2N6132 83p
2N6133 1.14
2N6134 1.36
2N6253 1.45
2N6254 1.55
2SC1306 96p
2SC1444 2.50
2SC2078 1.70
2SJ49 3.98
2SK134 3.98
3N128 1.12
3N138 3.50
3N139 3.30
3N140 2.37
3N143 2.85
3N152 3.00
3N153 2.47
3N154 2.56
3N200 6.93
3N201 2.98
40360 60p
40361 67p
40362 67p
40363 2.22
40406 1.39
40407 75p
40408 1.50
40410 1.80
40411 2.88
40412 90p
40673 83p
40822 1.80
40871 80p
40872 80p
AC125 35p
AC126 25p
AC127 25p
AC128 25p
AC132 39p
AC151 51p
AC152 45p
AC153 55p
AC153K 64p
AC176 27p
AC176K 37p
AC187 25p
AC187K 28p
AC188 25p
AC188K 40p
ACY17 70p
AF239 1.24
AF240 1.00
AF279B 75p
AF279G 75p
AL102 3.48
AU110 2.20
AU113 2.30
BC107 10p
BC107A 12p
BC107B 12p
BC108 10p
BC108A 12p
BC108B 12p
BC108C 14p
BC109 10p
BC109B 12p
BC109C 12p
BC140 29p
BC141 37p
BC142 29p
BC143 34p
BC147 10p
BC147A 10p
BC147B 10p
BC147C 20p
BC148 10p
BC148A 12p
BC148B 13p
BC148C 13p
BC149 10p
BC149B 12p
BC149C 13p
BC152 35p
BC153 23p
BC154 27p
BC157 11p
BC157A 12p
BC157B 13p
BC158 10p
BC158A 12p
BC158B 13p
BC159 11p
BC159A 12p
BC159B 13p
BC159C 18p
BC160 42p
BC161 48p
BC167 10p
BC167A 10p
BC167B 13p
BC168 10p
BC168B 10p
BC168C 10p
BC169 10p
BC169B 10p
BC169C 10p
BC177 16p
BC177A 25p
BC177B 26p
BC178 16p
BC178A 24p
BC178B 25p
BC179 20p
BC179A 25p
BC179B 25p
BC179C 27p
BC182 10p
BC182A 12p
BC182B 13p
BC182L 10p
BC182LA 13p
BC182LB 14p
BC183 10p
BC183A 11p
BC183B 12p
BC183C 13p
BC183L 10p
BC183LA 13p
BC183LB 13p
BC183LC 14p
BC184 10p
BC184B 12p
BC184C 13p
BC184L 10p
BC194LB 13p
BC184LC 14p
BC186 24p
BC187 24p

BC212 10p
BC212A 12p
BC212B 12p
BC212L 10p
BC212LA 13p
BC212LB 14p
BC213 10p
BC213A 11p
BC213B 12p
BC213C 13p
BC213L 10p
BC213LA 13p
BC213LB 13p
BC213LC 14p
BC214 10p
BC214B 12p
BC214C 13p
BC214L 10p
BC214LB 13p
BC214LC 14p
BC237 14p
BC237A 16p
BC237B 17p
BC237C 18p
BC238 14p
BC238A 15p
BC238B 16p
BC238C 17p
BC239 15p
BC239A 16p
BC239B 17p
BC239C 18p
BC300 45p
BC301 44p
BC302 43p
BC303 47p
BC327 14p
BC328 14p
BC337 15p
BC338 15p
BC440 32p
BC441 33p
BC460 32p
BC461 33p
BC516 40p
BC517 40p
BC547 13p
BC547A 14p
BC547B 14p
BC548 12p
BC548A 13p
BC548B 14p
BC548C 15p
BC549 13p
BC549B 14p
BC549C 15p
BC550 30p
BC550C 33p
BC557 15p
BC557A 16p
BC557B 16p
BC558 14p
BC558A 15p
BC558B 16p
BC558C 17p
BC559 15p
BC559B 16p
BC559C 17p
BC560 32p
BC560C 34p
BCY70 16p
BCY71 16p
BCY72 19p
BD131 44p
BD132 44p
BD135 40p
BD136 40p
BD137 42p
BD138 38p
BD139 38p
BD140 39p
BD237 80p
BD238 80p
BD239A 57p
BD239C 84p
BD240A 59p
BD240C 73p
BD241A 61p
BD241C 67p
BD242A 65p
BD242C 70p
BD243A 72p
BD243C 85p
BD244A 82p
BD244C 1.00
BD245A 1.14
BD245C 1.30
BD246A 1.20
BD246C 1.50
BD249A 2.00
BD249C 2.31
BD250A 2.11
BD250C 2.44
BD437 88p
BD438 88p
BD439 90p
BD440 91p
BD441 91p
BD442 93p
BD529 1.20
BD530 1.30
BD535 76p
BD536 76p
BD537 80p
BD538 80p
BD539 80p
BD539C 1.10
BD540 86p
BD540C 1.20
BD675 72p
BD676 77p
BD677 78p
BD678 83p
BD711 1.32
BD712 1.32
BDX14 1.30
BDX18 1.58
BDX32 3.47
BDY54 1.70
BDY55 1.75
BDY56 1.80
BDY57 5.25
BDY58 6.16
BF194 12p
BF195 12p
BF196 12p
BF197 12p
BF198 15p
BF199 15p
BF200 1.48
BF224J 32p
BF225J 35p
BF240 38p
BF241 38p
BF244A 36p
BF244B 38p
BF245A 30p
BF245B 51p
BF246 52p
BF246A 38p
BF246B 53p
BF247A 54p
BF247B 56p
BF254 38p
BF255 42p
BF256A 36p
BF256B 46p
BF256C 62p
BF257 30p
BF258 32p
BF259 35p
BC207 19p
BC208 19p
BC209 19p

BF457 48p
BF458 56p
BF459 62p
BF469 88p
BF470 88p
BFR39 25p
BFR40 25p
BFR41 25p
BFR79 25p
BFR80 25p
BFR81 25p
BFR90 2.11
BFS28 2.95
BFS61 1.00
BFS98 1.10
BFX29 26p
BFX30 27p
BFY50 23p
BFY51 23p
BFY52 23p
BFY53 31p
BSX19 24p
BSX20 24p
BSX21 40p
BU104 2.22
BU105 1.70
BU109 3.29
BU126 1.47
BU204 2.25
BU205 1.75
BU206 1.89
BU208 1.38
BU326S 2.38
BU406 1.45
BU407 1.45
BU408 1.35
BU500 2.95
BUV20 11.00
BUV20 11.00
BUV21 10.90
BUV23 13.60
BUV24 12.10
BUV25 15.00
BUX20 17.00
BUY18S 3.96
E430 5.60
J300 48p
J310 53p
MJ802 3.98
MJ900 2.90
MJ901 3.10
MJ1000 2.50
MJ1001 3.00
MJ1800 3.60
MJ2500 2.10
MJ2501 2.25
MJ2955 1.00
MJ3000 2.19
MJ3001 2.25
MJ3701 2.56
MJ4502 3.99
MJ15003 4.86
MJ15004 5.56
MJ15015 2.46
MJ15016 3.34
MJE340 53p
MJE350 1.50
MJE2955 99p
MJE3055 69p
MPSA05 23p
MPSA06 25p
MPSA10 28p
MPSA12 29p
MPSA13 40p
MPSA14 40p
MPSA16 30p
MPSA18 65p
MPSA20 40p
MPSA42 40p
MPSA43 40p
MPSA55 20p
MPSA56 30p
MPSA65 40p
MPSA66 47p
MPSA70 45p
MPSA92 38p
MPSA93 38p
MPSL01 42p
MPSL51 48p
MPSU01 84p
MPSU04 1.32
MPSU05 55p
MPSU06 56p
MPSU07 75p
MPSU51 80p
MPSU55 58p
MPSU56 58p
MPSU57 1.20
OC20 2.30
OC22 2.00
OC23 2.00
OC25 2.50
OC28 1.70
OC29 2.36
OC35 2.36
OC41 80p
OC43 70p
OC44 82p
OC70 50p
OC71 60p
OC72 60p
OC82 60p
OC82D 70p
OC83 75p
TIP29A 32p
TIP29C 38p
TIP30A 36p
TIP30C 38p
TIP31A 38p
TIP31C 38p
TIP32A 38p
TIP32C 42p
TIP33A 65p
TIP33C 78p
TIP34A 74p
TIP34C 88p
TIP35A 1.08
TIP35C 1.28
TIP36A 1.29
TIP36C 1.38
TIP41A 40p
TIP41C 56p
TIP42A 56p
TIP42C 66p
TIP49 1.20
TIP50 1.40
TIP53 1.57
TIP54 1.58
TIP110 74p
TIP112 90p
TIP115 81p
TIP117 96p
TIP120 68p
TIP122 73p
TIP125 1.20
TIP127 1.27
TIP130 1.50
TIP132 1.60
TIP135 1.60
TIP137 1.87
TIP140 1.04
TIP142 1.04
TIP145 1.19
TIP147 1.19
TIP2955 77p
TIP3055 70p
TIS43 40p
TIS45 66p
TIS46 66p
TIS47 49p
TIS88A 62p

VN10KM 60p
VN46AF 84p
VN66AF 85p
ZTX107 10p
ZTX108 10p
ZTX109 10p
ZTX300 13p
ZTX301 15p
ZTX302 15p
ZTX303 23p
ZTX304 15p
ZTX310 35p
ZTX311 32p
ZTX312 35p
ZTX313 36p
ZTX314 24p
ZTX320 35p
ZTX330 35p
ZTX341 28p
ZTX500 14p
ZTX501 14p
ZTX502 14p
ZTX503 17p
ZTX504 24p
ZTX510 34p
ZTX530 24p
ZTX531 25p

DIODES
1N34A 30p
1N821 70p
1N823 92p
1N914 08p
1N916 10p
1N1190 1.47
1N4001 4p
1N4002 4½p
1N4003 5½p
1N4004 5½p
1N4005 6p
1N4006 6½p
1N4007 7p
1N4009 20p
1N4148 6p
1N4150 18p
1N4448 22p
1N4517 22p
1N5172 30p
1N5176 94p
1N5400 12p
1N5401 13p
1N5402 14p
1N5403 15p
1N5404 16p
1N5405 17p
1N5406 18p
1N5407 19p
1N5408 20p
1N5024 52p
1N5625 60p
1N5626 62p
1N5627 68p
1S44 10p
BA102 25p
BA115 25p
BA133 40p
BA138 30p
BA142 20p
BA144 15p
BA155 15p
BA156 38p
BA157 25p
BA158 30p
BA159 32p
BA182 40p
BA201 18p
BA202 26p
BA316 25p
BA317 25p
BA318 30p
BAV10 16p
BAV19 15p
BAV20 15p
BAV49 15p
BAX13 10p
BAX16 11p
BY126 20p
BY127 22p
BY134 52p
BY182 1.26
BY188A 65p
BY206 36p
BY207 36p
BY223 1.56
BY297 48p
BY299 55p
MZ2361 1.80
OA10 70p
OA47 20p
OA90 10p
OA91 10p
OA95 20p
OA200 20p
OA202 20p

DIACS
BR100 40p
ST2 25p

THYRISTORS
4, 8 & 12 Amps Texas TO220
Suffix A 100V
B 200V
C 300V
D 400V
M 600V

4A
TIC106A 46p
TIC106B 47p
TIC106C 48p
TIC106D 59p
TIC106M 68p

8A
TIC116A 66p
TIC116B 68p
TIC116C 71p
TIC116D 73p
TIC116M 80p

2A
TIC126A 72p
TIC126B 72p
TIC126C 73p
TIC126D 77p
TIC126M 95p

TRIACS
Texas 400V TO220 Case
TIC206D(4A) 66p
TIC225D(6A) 74p
TIC226D(8A) 88p
TIC236D(12A) 1.16
TIC246D(16A) 1.22
TIC253D(20A) 1.90
TIC263D(25A) 2.11

BRIDGE RECTIFIERS
(PIV shown in brackets)
1½ amp type
W01 (100) 20p
W02 (200) 26p
W04 (400) 28p
W08 (800) 40p

2 amp type Square with hole
S01 (100) 37p
S02 (200) 40p
S04 (400) 40p
S08 (800) 56p

6 amp type Square with hole
PW01 (100) 50p
PW02 (200) 78p
PW04 (400) 85p
PW06 (600) 90p

25 amp type Metal clad with hole
K01 (100) 2.20
K02 (200) 2.30
K04 (400) 2.80
K06 (600) 3.40

Proprietory Bridges
B40C1500 1.20
B80C3700 1.80
BY164 55p
BY179 92p

ZENER DIODES
400/500mW E24 Series
2.4-47V 8p
1.3 Watt E24 Series
3.3-82V 15p
2.5 Watt E24 Series
7.5-75V 1.10

NEW OPTO DEVICES
New LEDs Now in stock
R = red
G = green
Y = yellow

	1+	50+
Large diffused		
R5D	9p	7p
G5D	15p	12p
Y5D	15p	12p
Small diffused		
R2D	8p	6p
G2D	12p	10p
Y2D	12p	10p
Micro 0.1"		
R1D	25p	22p
G1D	27p	25p
Y1D	27p	25p
Large clear		
R5C	12p	10p
G5C	17p	13p
Y5C	17p	13p
Super bright Large (100 times brighter)		
R5U	38p	29p
G5U	42p	34p
Y5U	42p	34p
Tri colour flat		
RGY8	80p	78p

LINEAR ICs
AN103 2.20
AY1.5050 95p
AY3.8910 5.39
AY3.8912 5.59
AY5.1013A 3.00
CA3048 2.99
CA3049 3.21
CA3059 2.80
CA3060 4.08
CA3090AD 3.70
CA3130E 87p
CA3130T 1.80
CA3140E 38p
CA3140T 85p
HA1366W 2.40
HA1388 2.54
LC7120 3.20
LC7130 3.20
LF351 47p
LF353 92p
LF355 83p
LF356 92p
LF357 1.08
LM348N 62p
LM349N 1.16
LM350K 4.80
LM379S 4.79
LM380N14 75p
LM380N8 1.50
LM381AN 2.26
LM381N 1.40
LM382N 1.12
LM383T 3.40
LM384N 1.40
LM386N1 88p
LM386N4 1.20
LM388N 2.43
LM391N60 1.70
LM391N80 1.93
LM723CH 1.21
LM723CN 40p
LM725CH 3.40
LM725CN 3.19
LM733 69p
LM741CH 96p
LM741CN 15p
LM741CN14 80p
LM747CN 69p
LM748CH 1.00
LM748CN 35p
LM1303N 1.20
LM1304N 2.50
LM1305N 3.10
LM1307N 2.75
LM1310N 1.45
LM1330N 2.25
LM1871 4.39
LM1872 4.38

LM1886 7.44
LM1889 3.77
LM2907N 2.75
LM2907N8 2.80
LM2917N 1.89
LM2917N 1.89
NE531N 1.38
NE543N 2.50
NE544N 1.80
NE555 16p
NE556 46p
NE558 1.88
NE560 3.25
NE565 1.10
NE5661 49
NE567 1.37
NE570 3.75
NE571 3.75
NE5534A 1.25
PLL02A 4.95
PLL03A 12.75
RC4136 59p
RC4194 3.95
SL470 3.47
SL490 3.47
TBA500 2.97
TBA500Q 3.11
TBA510 2.95
TBA510Q 3.05
TBA520 2.57
TBA520Q 2.75
TBA530 2.55
TBA530Q 2.78
TBA540 2.72
TBA540Q 2.74
TBA550 3.25
TBA550Q 3.27
TBA560C 2.87
TBA570 2.37
TBA570Q 2.48
TCA910 2.19
TCA940 1.89
TDA1002 3.39
TDA1003 3.94
TDA1004 2.87
TDA1005 3.94
TDA1010A 2.25
TDA1022 4.96
TDA1024 1.19
TDA2610 3.90
TDA2611A 2.50
UAA170 1.69
UAA180 1.69
ULN2003 86p
UPC575C2 2.86
UPC1156 2.75
XR2206 2.92
ZN414 79p
ZN419 2.25
ZN1034 1.99
ZN1040 6.69
ZTK22 89p
ZTK33 89p

CPUs
1802 7.00
2650A 11.95
6502 3.24
6800 2.74
6802 2.88
6809 8.50
8035 3.48
8060 10.90
8080A 2.78
8085A 3.48
8900 57.75
9980 21.00
SCMP1 17.88
Z80A 2.88

LOGIC ICs including COMPUTER SUPPORT
ADC0804 3.95
ADC0816 14.90
ADC0817 10.00
AY5-2376 8.90
ICM7555 80p
INS1671 20.00
INS1771 20.00
RO2513LC 6.88
RO2513UC 7.50
SAA5000 3.00
SAA5010 7.10
SAA5012 7.10
SAA5020 5.50
SAA5030 9.00
SAA5040 15.00
SAA5041 16.00
SAA5050 8.50
SAA5052 8.50
TMS6011 3.85
8T26 1.35
8T28 1.35
8T95 1.35
8T97 1.35
81LS95 90p
81LS96 1.20
81LS97 90p
81LS98 1.20
6522 3.19
6532 6.95
8154 9.42
8155 3.50
Z80ACTC 2.86
Z80ADART 8.00
Z80ADMA 10.00
Z80APIO 2.80
ZN425E8 3.38

VOLTAGE REGULATORS
Positive 100mA
78L05A 30p
78L12A 30p
78L15A 30p
78L24A 30p
1 Amp TO220
7805T 38p
7812T 38p
7815T 38p
7824T 38p
Negative 100mA TO92
79L05 58p
79L12 58p
79L15 58p
1 Amp TO220
7905T 44p
7912T 44p
7915T 44p
7924T 44p

ZERO INSERTION DIL SOCKETS
24 pin 4.98
40 pin 5.30

40 CMOS
4000 10p
4001 10p
4002 11p
4006 48p
4007 15p
4008 32p
4009 24p
4010 10p
4011 10p
4012 15p
4013 20p
4014 46p
4015 58p
4016 20p
4017 32p
4018 46p
4019 28p
4020 44p
4021 39p
4022 48p
4023 12p
4024 32p
4025 12p
4026 79p
4027 20p
4028 29p
4029 28p
4030 14p
4031 1.19
4032 80p
4033 1.20
4034 1.25
4035 58p
4036 2.44
4037 1.30
4038 99p
4039 2.80
4040 46p
4041 40p
4042 39p
4043 48p
4044 41p
4045 99p
4046 44p
4047 39p
4048 39p
4049 22p
4050 23p
4051 44p
4052 48p
4053 48p
4054 79p
4055 83p
4056 88p
4059 4.35
4060 42p
4063 79p
4066 22p
4067 2.48
4068 14p
4069 13p
4070 13p
4071 13p
4072 13p
4073 13p
4075 13p
4076 46p
4077 13p
4078 13p
4081 12p
4082 12p
4085 48p
4086 53p
4089 1.50
4093 20p
4094 88p
4095 88p
4096 90p
4097 2.88
4098 74p
4099 90p

45 CMOS
4502 [illegible]
4503 29p
4507 33p
4508 1.19
4510 38p
4511 48p
4512 38p
4514 1.17
4515 1.17
4516 54p
4518 39p
4519 29p
4520 48p
4521 99p
4526 59p
4527 59p
4528 46p
4532 88p
4534 4.29
4536 2.88
4538 65p
4539 90p
4543 85p
4553 2.25
4555 38p
4556 38p
4560 1.48
4566 1.48
4569 1.50
4584 38p
4585 78p

MEMORIES
2101 4.00
2102AL2 1.35
2111-1 3.00
2114 (200ns) 80p
2532 3.00
2708 2.25
2716 (5V) 2.11
4027 3.00
4044 7.00
4060 9.50
4116 (200ns) 75p
4118-3 3.25
4164 4.50
S101 1.95
5204 7.50
6116 4.40
6514 3.30
6810 1.15
7489 4.20
74189 4.00
74LS289 3.25
74LS188 2.25
74LS287 3.05
74LS288 2.25

MINI TOGGLE SWITCHES
SPST 49p
SPDT 55p
DPDT 65p
DPDT/C OFF 85p
4PDT 2.75

TTL
7400 10½p
7401 11p
7402 11p
7403 12p
7404 12p
7405 15p
7406 20p
7407 20p
7408 14p
7409 14p
7410 15p
7411 16p
7412 18p
7413 18p
7414 25p
7416 20p
7417 20p
7420 15p
7421 20p
7422 20p
7423 20p
7425 24p
7426 28p
7427 22p
7428 26p
7430 14p
7432 22p
7433 22p
7437 25p
7438 25p
7440 15p
7441 65p
7442 32p
7443 90p
7444 90p
7445 50p
7446 60p
7447 40p
7448 44p
7450 15p
7451 15p
7453 15p
7454 14p
7460 15p
7470 34p
7472 25p
7473 28p
7474 20p
7475 25p
7476 28p
7480 40p
7481 1.19
7482 68p
7483 38p
7484 69p
7485 80p
7486 20p
7489 2.20
7490 20p
7491 35p
7492 25p
7493 25p
7494 38p
7495 38p
7496 40p
7497 90p
74100 80p
74104 50p
74105 55p
74107 22p
74109 25p
74110 35p
74116 50p
74118 58p
74119 80p
74120 58p
74121 28p
74122 40p
74123 40p
74125 35p
74126 34p
74128 35p
74132 29p
74136 30p
74141 68p
74142 1.99
74143 2.48
74144 2.10
74145 50p
74147 88p
74148 70p
74150 48p
74151 40p
74153 40p
74154 48p
74155 40p
74156 40p
74157 30p
74159 79p
74160 80p
74161 48p
74162 48p
74163 48p
74164 48p
74165 48p
74166 48p
74170 1.25
74172 2.75
74173 60p
74174 54p
74175 49p
74176 39p
74177 46p
74178 79p
74180 40p
74181 1.15
74182 80p
74184 90p
74185 90p
74186 4.69
74188 2.50
74190 48p
74191 48p
74192 46p
74193 46p
74194 46p
74195 46p
74196 46p
74197 48p
74198 83p
74199 83p
74221 53p

74H TTL
74H00 1.45
74H01 1.46
74H04 1.66
74H05 1.55
74H10 1.45
74H11 1.45
74H20 1.45
74H21 1.46
74H30 1.46
74H40 1.55
74H51 1.75
74H53 1.65
74H54 1.46

74LS TTL
74LS00 11p
74LS01 11p
74LS02 11p
74LS03 12p
74LS04 12p
74LS05 12p
74LS08 12p
74LS10 12p
74LS11 12p
74LS12 12p
74LS13 19p
74LS14 30p
74LS15 12p
74LS20 12p
74LS21 12p
74LS22 12p
74LS27 12p
74LS28 14p
74LS30 12p
74LS32 13p
74LS33 14p
74LS37 14p
74LS38 15p
74LS40 13p
74LS42 28p
74LS47 35p
74LS51 14p
74LS54 14p
74LS55 14p
74LS73 18p
74LS74 18p
74LS75 20p
74LS76 20p
74LS78 18p
74LS80 1.20
74LS83 38p
74LS85 48p
74LS86 16p
74LS90 24p
74LS92 25p
74LS93 24p
74LS94 38p
74LS96 98p
74LS107 20p
74LS109 27p
74LS112 22p
74LS113 22p
74LS114 22p
74LS122 38p
74LS123 38p
74LS124 89p
74LS125 24p
74LS126 25p
74LS132 39p
74LS136 29p
74LS138 32p
74LS139 30p
74LS145 70p
74LS147 1.57
74LS148 75p
74LS151 38p
74LS153 38p
74LS154 79p
74LS155 29p
74LS156 35p
74LS157 27p
74LS158 28p
74LS160 35p
74LS161 36p
74LS162 36p
74LS163 36p
74LS164 40p
74LS165 59p
74LS168 84p
74LS169 86p
74LS170 70p
74LS173 56p
74LS174 46p
74LS175 38p
74LS181 99p
74LS183 1.79
74LS190 36p
74LS191 38p
74LS192 38p
74LS193 37p
74LS194 32p
74LS195 32p
74LS196 46p
74LS197 48p
74LS221 50p
74LS240 56p
74LS241 56p
74LS242 56p
74LS243 56p
74LS244 60p
74LS245 70p
74LS247 50p
74LS248 56p
74LS249 56p
74LS251 30p
74LS253 32p
74LS257 35p
74LS258 35p
74LS259 56p
74LS261 1.36
74LS266 18p
74LS273 60p
74LS275 2.25
74LS279 30p
74LS280 1.60
74LS283 40p
74LS289 4.70
74LS290 46p
74LS293 40p
74LS295 88p
74LS298 88p
74LS299 2.50
74LS323 1.78
74LS324 1.46
74LS325 2.88
74LS326 2.38
74LS327 2.38
74LS347 96p
74LS348 1.00
74LS352 78p
74LS353 79p
74LS362 7.25
74LS365 29p
74LS366 79p
74LS367 29p
74LS368 29p
74LS373 59p
74LS378 58p
74LS386 1.14
74LS390 46p
74LS393 42p
74LS395 88p
74LS396 1.90
74LS398 2.70
74LS399 1.58
74LS445 98p
74LS490 2.20
74LS540 1.60
74LS541 98p
74LS640 1.88
74LS641 1.88

MINI-MULTI TESTER

Deluxe pocket size precision moving coil instrument, Jewelled bearings - 2000 o.p.v. mirrored scale. 11 instant range measures:

DC volts 10, 50, 250, 1000.
AC volts 10, 50, 250, 1000.
DC amps 0 – 100 mA.

Continuity and resistance 0 - 1 meg ohms in two ranges. Complete with test prods and instruction book showing how to measure capacity and inductance as well. Unbelievable value at only £6.75 + 60p post and insurance.

FREE Amps range kit to enable you to read DC current from 0 - 10 amps, directly on the 0 - 10 scale. It's free if you purchase quickly, but if you already own a Mini-Tester and would like one, send £2.50.

SUPER HI-FI SPEAKER CABINETS

Made for an expensive Hi-Fi outfit – will suit any decor. Resonance free. Cut-outs for 6½" woofer and 2½" tweeter. The front material is Dacron. The completed unit is most pleasing. Supplied in pairs, price £6.90 per pair (this is probably less than the original cost of one cabinet) carriage £3.00 the pair.

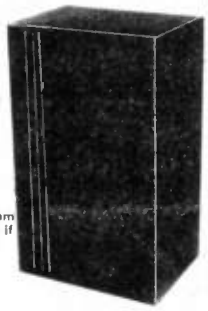

GOODMANS SPEAKERS

6½" 8 ohm 25 watt £4.50. 2½" 8 ohm tweeter. £2.50. No extra for postage if ordered with cabinets. Xover £1.50.

OITTO but for 8" speaker and 4" tweeter. £7.50 + £3.50.

VENNER TIME SWITCH

Mains operated with 20 amp switch, one on and one off per 24 hrs. repeats daily automatically correcting for the lengthening or shortening day. An expensive time switch but you can have it for only £2.95. These are without case but we can supply a plastic base £1.75 or metal case £2.95. Also available is adaptor kit to convert this into a normal 24 hr. time switch but with the added advantage of up to 12 on/offs per 24 hrs. This makes an ideal controller for the immersion heater. Price of adaptor kit is £2.30.

THERMOSTAT ASSORTMENT

10 different thermostats. 7 bi-metal types and 3 liquid types. There are the current stats which will open the switch to protect devices against overload, short circuits, etc., or when fitted say in front of the element of a blow heater, the heat would trip the stat if the blower fuses; appliance stats, one for high temperatures, others adjustable over a range of temperatures which could include 0 – 100°C. There is also a thermostatic pod which can be immersed, an oven stat, a calibrated boiler stat, finally an ice stat which, fitted to our waterproof heater element, up in the loft could protect your pipes from freezing. Separately, these thermostats could cost around £15.00 - however, you can have the parcel for £2.50.

50 THINGS YOU CAN MAKE

Things you can make include Multi range meter, Low ohms tester, A.C. amps meter, Alarm clock, Soldering iron minder, Two way telephone, Memory jogger, Live line tester, Continuity checker, etc. etc., and you will still have hundreds of parts for future projects. Our 10Kg parcel contains not less than 1,000 items - panel meters, timers, thermal trips, relays, switches, motors, drills, taps, and dies, tools, thermostats, coils, condensers, resistors, neons, earphone/microphones, nicad charger, power unit, multi-turn pots and data on the 50 projects.

YOURS FOR ONLY £11.50 plus £3.00 post.

EXTRACTOR FANS

Mains operated – ex-computer.

Woods extractor 4"x 4" Muffin 115v.
5" – £5.75, Post £1.25 £4.50. Post 75p.
6" – £6.95, Post £1.25 4"x 4" Muffin 230v.
5" Plannair extractor £5.75. Post 75p.
£6.50. Post £1.25.

ROTARY WAFER SWITCHES

5 amp silver plated contacts. ¼" shaft. 1" dia. wafer.

Single wafer types, 29p each. as follows:

1 pole 12 way	2 pole 6 way	3 pole 4 way
4 pole 3 way	6 pole 2 way	4 pole 3 way

Two wafer type, 59p each, as follows

2 pole 12 way	4 pole 5 way	4 pole 6 way
6 pole 2 way	8 pole 3 way	12 pole 2 way

3 wafer types 99p each,

9 pole 4 way	5 pole 5 way	6 pole 6 way
	12p 3 way	18p 2 way

EXTRA POWERFUL 12v MOTOR

Made to work battery lawnmower, this probably develops up to ¼ h.p., so it could be used to power a go-kart or to drive a compressor, etc. etc. £6.90 + £1.50 post.
(This is easily reversible with our reversing switch - Price £1.15).

MINI MONO AMP

on p.c.b., size 4"x 2" approx. Fitted volume control and a hole for a tone control should you require it. The amplifier has three transistors and we estimate the output to be 3W rms. More technical data will be included with the amplifier. Brand new, perfect condition, offered at the very low price of £1.15 each, or 10 for £10.00.

POPULAR PROVEN PROJECTS

MULTI-CHANNEL or ROBOT CONTROLLER

This is two kits. The 8 channel transmitter kit and the 8 channel receiver kit. Each kit comes with diagrams and notes, but no circuit boards, the component layout being left to you. The data shows how to drive, reverse and steer two or more motors. With spare channels to perform other functions. Price £9.50 for both kits.

3 CHANNEL SOUND TO LIGHT KIT

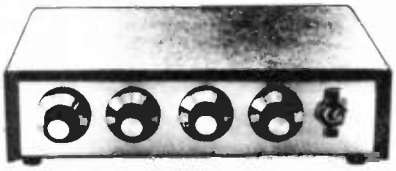

Complete kit of parts for a three channel sound to light unit controlling over 2000 watts of lighting. Use this at home if you wish but it is plenty rugged enough for disco work. The unit is housed in an attractive two tone metal case and has controls for each channel, and a master on/off. The audio input and output are by ¼" sockets and three panel mounting fuse holders provide thyristor protection. A four pin plug and socket facilitate ease of connecting lamps. Special price is £14.95 in kit form or £25.00 assembled and tested. Case & metal Chassis No. Fully punched and prepared.

WHY BE COLD - Build a tangential blower heater.

TANGENTIAL BLOW HEATER

2.5 Kw quiet, efficient instant heating from 230/240 volt mains. Kit consists of blower as illustrated, 2.5 Kw element, control switch and data all for £4.95. post £1.50.

CAR STARTER AND CHARGER KIT

In an emergency you can start car off mains or bring your battery up to full charge in a couple of hours. The kit comprises: 250 watt mains transformer, 40 amp bridge rectifier, start/charge switch and full instructions. You can assemble this in the evening, box it up or leave it on the shelf in the garage, whichever suits you best. Price £12.50 + £3.00 post.

TRANSMITTER SURVEILLANCE

Tiny, easily hidden but which will enable conversation to be picked up with FM radio. Can be made in a matchbox – all electronic parts and circuit. £2.30. (not licenceable in the U.K.).

RADIO MIKE

Ideal for discos and garden parties, allows complete freedom of movement. Play through FM radio or tuner amp. £6.90 complete kit. (not licenceable in the U.K.)

FM RECEIVER

Made up and working, complete with scale and pointer needs only headphones, ideal for use with our surveillance transmitter or radio mike. £5.85. or kit of parts £3.95.

3 - 30v VARIABLE VOLTAGE POWER UNIT

With 1 amp DC output, for use on the bench, students, inventors, service engineers, etc. Automatic short circuit and overload protection. In case with a volt meter on the front panel. Complete kit £13.80.

INTERRUPTED BEAM

This kit enables you to make a switch that will trigger when a steady beam of infra red or ordinary light is broken. Main components – relay, photo transistor, resistors and capacitors, etc. Circuit diagram but no case. Price £2.30.

IONISER KIT

Refresh your home, office, shop, work room, etc. with a negative ION generator. Makes you feel better and work harder – complete mains operated kit, case included. £11.95 plus £2.00 post.

RADIO STETHOSCOPE

Easy to fault find – start at the aerial and work towards the speaker – when signal stops you have found the fault. Complete kit £4.95.

INVISIBLE AND SILENT SENTINEL

Ultra-sonic beam when broken could warn you of visitor – two kits – transmitter & receiver. To operate light or bell. £9.50.

BURGLAR ALARM

Complete kit includes 6" external alarm bell, mains power unit, control box with keyswitch, 10 window/door switches, 100 yards of wire. With instructions. £29.50.

12v MOTOR BY SMITHS

Made for use in cars, these are series wound and they become more powerful as load increases. Size 3½" long by 3" dia. These have a good length of ¼" spindle – price £3.45.

Ditto, but double ended £4.25.

Ditto, but permanent magnet, £3.75.

WATERPROOF HEATING WIRE

60 ohms per yard, this is a heating element wound on a fibre glass coil and then covered with p.v.c. Dozens of uses – around water pipes, under grow boxes in gloves and socks. 23p a metre.

J. BULL (Electrical) Ltd.

(Dept. EE), 34 - 36 AMERICA LANE, HAYWARDS HEATH, SUSSEX RH16 3QU. Established 30 YEARS

MAIL ORDER TERMS: Cash, P.O. or cheque with order. Orders under £10 add 60p service charge. Monthly account orders accepted from schools and public companies. Access & B/card orders accepted day or night. Haywards Heath (0444) 454563. Bulk orders: write for quote. Delivery by return. Shop open 9.00 — 5.30, mon to Fri, not Saturday.

SCHOOLS·LABS·STORES·WORKSHOPS·FACTORIES·

Your chance to re-stock at less than cost prices!!!

LIGHTING & POWER CABLES

Copper clad. PVC sheathed. Made by Volex to BSS

1.5mm single	per 100 metres	£2.00
1.5mm flat twin	per 100 metres	£3.50
1.5mm flat 3 core & E	per 100 metres	£5.50
4mm single	per 100 metres	£3.00
6mm flat 3 core	per 100 metres	£27.50
16mm flat twin & E	per 100 metres	£47.50

Telephone and multiway cables. Reliance as used by GPO.

15 core	per 200 metres	£60.00
10 core	per 200 metres	£40.00

THERMOSTATS & HEAT SWITCHES

Thermostat: 3 level contact type	.30
10 amp appliance type thermostat. Spindle adjust	.40
Contact type with changeover, 10 amp switches, 0 - 100°C	.58
Wall mounting, metal case, c/o contacts low voltage	£2.30

TIMERS & CLOCKSWITCHES

Time and Set Switches. Smiths, Glass fronted 25 amp, 230v	£2.30
24 Hour time switch. 100 amp Smiths and clockwork reserve. Ex-Electricity Company	£5.50
Cooker clock switch. Smiths 12 hour	£1.00

Clockwoek operated switches:
15 amp, 230v. On time up to:

10 minutes	£1.37	120 minutes	£1.37
30 minutes	£1.37	360 minutes	£1.37

OMRON mini-timer, ref. STP NH	£3.50

BLEEPERS - SIRENS - BELLS - BUZZERS

Siren/Hooter – Delta 6 or 12v DC or 24v AC	.37
Open type buzzer, ex GPO, 10 - 20V	.30
Underdome bell, 4v - 9v	.85
Fire alarm bell, 12" gong, heavy cast iron construction	£12.00

COUNTERS

6 digit counter. Mains operated. Not resettable	.60
Ditto, But even numbers only	.50
6 digit counter. 48v DC, 115v AC. Resettable	£1.00

SWITCHES - ROCKER, TOGGLE, ETC.

Rocker switches: white push into hole 1" x 7/16". All rated 10 amp, AC 250 volt.

on/off	.12
changeover centre off	.15
on/off with neon	.30
push to make spring return	.20
push to break spring return	.20
Larger two circuit one on one with mounting plate	.20
13 amp rocker switch. Car Fastener (DoT)	.15
Pistol Grip Switch: with lock-on as in electric drills	.30
Interlocking switch: blow heater, 3 rockers, 10 amp	.30
Micro switches. V3 types. 10 amp c/o contacts	.20
mains button operated: 15 amp c/o contacts	.25
10 amp off/on	.15
15 amp off/on	.20
Lever operated add	.10
Lever with roller operation add	.15
Miniature types: Burgess V4T6 c/o	.30
Two mounted with roller operator	.65
Glass reed switches: 60 watt 10p. 40 watt 5p.	
flat multi stackable 60 watt	.50
Operating coils for reed switch multi voltage 3, 6, 9, or 12	.50
Ceramic magnets Mullard	.10
Mini Magnet	.15

MISCELLANEOUS ITEMS

Neon Mains indicators. Standard	.15
Extra small	.25
Bench isolation mains in 230/240v output. 250 Watts	£4.50
Mains input. Porcelain removable fuse	.20
Light operated switch 12 volt. Encapsulated	£1.25
Insulating board, srbp etc. Approx 10 tons. Sheet size 4'x 4' or larger. Various thicknesses, price per lb.	.50
Ditto, Tufnol, price per lb.	£2.00
Aerosol can ICI Fluon lubricant	.35
Varicap P.B. TV tuner	.50
Battery holder takes 6 U2 batteries, snap connector	.25
Car Battery clips, as for charger, + and –. per pair	.10

MAINS TRANSFORMERS

6 volt 1 amp	.50	35 volt 2 amp	£2.00
6.3 volt 2 amp	£1.00	38 volt 2½ amp	£2.50
12 volt ¾ amp	.75	26 volt 10 amp	£4.00
12 volt 4 amp	£2.00	50 volt 2 amp	£2.00
12 volt 1 amp	£1.00	12 - 0 - 12, 2 amp	£2.50
8.5 - 0 - 8.5 1 amp	£1.00	12 - 0 - 12, 1 amp	£2.00
18 volt 1 amp	£1.50	100W auto 115v o/p	£2.00
25 volt 1½ amp	£1.50		

MOTORS - MAINS & BATTERY

3 - 6 volt battery motor, very small		.15
3 - 12 volt battery motor, very low current		.20
Mains motor with gear box	5 rev minute	£2.25
	80 rev per minute	£3.00
	110 rev minute	£2.00
	200 rev minute	£1.50
Mains motor, double ended fan motor		£1.20
Ditto single ended fan motor		£1.00
Fan blade for above		.50
Mains motor, double ended, very powerful 1½" stack		£1.50
Mains instrument motors with gear box:	1 rev 24 hours	£1.50
	1 rev 1 hour	£1.50
	16 rev minute	£1.50
	4 rev minute	£1.50
	2 rev minute	£1.50
	1 rev minute	£1.50
Motor clockwork, set up to 1 hour		.38
Motor, clockwork set up to 1 hour with ringer		.75
Mains motor ⅙ h.p. 1425 revs, ex-computer		£4.25
Vent opening motor with end stop switches		£12.50
12 volt motors, Smiths, single ended ⅛" spindle		£1.50
12 volt motors, Smiths, double ended ⅛" spindle		£2.00
12 volt motors, P magnet type, single ended		£1.75
1½ h.p. motor 3450 rpm 100 volt. 50Hz. New		£5.00

SPECIAL TERMS. For items in this column. Order no less than 10 of any item. Then add VAT at 15%, and 20% for carriage in the case of transformers and electric motors. All other items in this column are free post & packing.

Rapid Electronics

MAIL ORDERS:
Unit 3, Hill Farm Industrial Estate,
Boxted, Colchester, Essex CO4 5RD.
TELEPHONE ORDERS:
Colchester (0206) 36412.

ACCESS AND BARCLAYCARD WELCOME

LINEAR

			LM339	45	LM3911	120	NE566	140	TL064	96
			LM348	60	LM3914	175	▶NE567	100	TL071	30
			LM358	50	LM3915	195	▶NE570	370	TL072	50
555CMOS	80	ICL7106	790	LM377	170	LM13600	105	NE571	370	TL074	95
556CMOS	150	ICL7611	95	▶LM380	65	MC1496	68	▶RC4136	55	▶TL081	25
709	25	ICL7621	180	▶LM381	120	MC3340	135	▶RC4558	60	TL082	45
▶741	14	ICL7622	180	LM382	120	▶MF10CN	350	SL480	170	TL084	95
748	35	ICL8038	295	LM384	130	ML922	400	SL490	250	TL170	50
9400CJ	350	ICL8211A	200	LM386	65	ML924	195	SL76018	150	UA2240	120
AY-3-1270	720	ICM7224	785	LM387	120	ML925	210	▶SN76477	380	ULN2003	85
AY-3-8910	370	ICM7555	80	LM393	100	ML926	140	SP8629	250	ULN2004	90
AY-3-8912	540	▶LF351	45	LM709	25	ML927	140	TBA120S	70	XR2206	290
CA3046	60	LF353	85	LM711	60	ML928	140	TBA800	75	ZN414	100
▶CA3080	65	LF356	90	LM725	350	ML929	140	TBA810	96	ZN423	135
CA3089	190	LM10	360	LM733	75	MM5387A	465	TBA820	70	ZN424	135
CA3090AQ	375	LM301A	25	LM741	14	NE529	225	TBA950	220	ZN425E	350
CA3130E	85	LM311	70	LM747	60	NE531	150	TDA1008	320	ZN426E	330
▶CA3140E	36	LM318	120	LM1458	40	NE544	205	▶TDA1022	490	ZN427E	650
CA3161E	100	LM324	40	LM2917	200	▶NE555	16	TDA1024	125	ZN428E	480
CA3189	290	LM334Z	100	LM3900	45	▶NE556	45	TL061	40	ZN459	285
▶CA3240E	110	LM335Z	125	▶LM3909	70	NE565	110	TL062	60	ZN1034E	200

MICRO

BEST PRICES ANYWHERE!

2114L-2	75	Z80A CPU	290	81LS96	85		
2716	205	Z80A P10	260	81LS97	85		
2532	340	Z80A CTC	260	1488	55		
2732	340	Z80A S10	900	1489	55		
4116 P20	70	Z80A DMA	1150	Epson Printers and D			
6116-P3 150nS	365	Z80A DART	500	Connectors now avail-			
4164	440	81LS95	85	able at low low prices.			

CRYSTALS

100KHz	235	4.43M	100
1MHz	275	6.0M	140
1.8432M	200	7.0M	150
2.0M	225	8.0M	140
2.4576M	200	10.0M	170
3.579M	95	12M	170
4.0M	140	16M	200

CMOS

		4016	20	4034	140	4054	78	4081	12	40193	65	4528	45		
		4017	30	4036	249	4055	80	4082	12	4502	60	4529	150		
		4018	45	4039	280	4059	430	4085	48	4503	32	4532	60		
4000	10	4019	25	4040	40	4060	42	4086	50	4507	35	4534	400		
4001	10	4020	42	4041	40	4063	80	4089	125	4508	110	4538	60		
4002	12	4021	40	4042	38	4066	22	4093	18	4510	45	4543	50		
4006	50	4022	45	4043	40	4067	225	4094	68	4511	40	4549	360		
4007	14	4023	16	4044	40	4068	14	4095	65	4512	40	4553	215		
4008	36	4024	33	4046	40	4069	13	4097	290	4514	115	4555	35		
4009	24	4025	12	4047	35	4070	13	4098	70	4515	115	4556	38		
4010	24	4026	75	4048	38	4071	13	4099	70	4516	55	4559	390		
4011	10	4027	20	4049	21	4072	13	40106	40	4518	40	4560	140		
4012	15	4028	40	4050	21	4073	13	40109	110	4520	50	4584	35		
4013	20	4029	45	4051	42	4075	13	40163	60	4521	130	4585	60		
4014	45	4030	14	4052	48	4076	45	40173	100	4526	60	4724	140		
4015	40	4031	125	4053	48	4077	14	40175	75	4527	50				

TRANSISTORS

				BC517	40	BF337	40	MPSU56	60	ZTX108	8	2N3055	50		
				BC547	7	BFR40	23	TIP29A	30	ZTX109	12	2N3442	120		
				BC548	10	BFR80	23	TIP29B	55	ZTX300	14	▶2N3702	6		
AC125	35	BC149	9	BC549	10	▶BFR81	20	TIP29C	37	ZTX301	16	2N3703	9		
AC126	25	BC157	8	BC558	10	BFX29	25	TIP30A	35	ZTX302	15	▶2N3704	6		
AC127	25	BC158	10	BCY70	18	BFX84	25	TIP30B	50	ZTX304	17	2N3705	9		
▶AC128	20	BC159	8	BCY71	18	BFX85	26	TIP30C	37	ZTX341	30	2N3706	9		
AC176	25	BC160	45	BCY72	18	BFX86	28	TIP31A	35	ZTX500	15	2N3707	10		
AC187	22	BC168C	10	BD115	65	BFX87	25	TIP31C	37	ZTX501	15	2N3708	10		
AC188	22	BC169C	10	BD131	35	BFX88	25	TIP32A	35	ZTX502	16	2N3709	10		
AD142	120	BC170	8	BD132	35	BFY50	23	TIP32C	37	ZTX503	18	2N3772	170		
AD149	80	BC171	10	BD133	50	BFY51	20	TIP33A	50	ZTX504	25	▶2N3773	195		
AD161	40	BC172	8	BD135	40	BFY52	23	TIP33C	75	2N697	20	▶2N3819	18		
AD162	40	BC177	18	BD136	30	BFY53	32	TIP34A	60	2N698	40	2N3820	40		
AF124	60	BC178	18	BD137	30	BFY55	32	TIP34C	85	2N706A	20	2N3823	65		
AF126	50	BC179	18	BD138	30	BFY56	32	TIP36A	105	2N708	20	2N3866	90		
AF139	40	BC182	10	▶BD139	35	BRY39	40	TIP35C	125	2N918	35	2N3903	10		
AF186	70	▶BC182L	8	▶BD140	35	BSX20	20	TIP36A	125	2N1132	22	2N3904	10		
AF239	75	BC183	10	BD204	110	BSX29	35	TIP36C	135	2N1613	30	2N3905	6		
BC107	10	BC183L	10	BD206	110	BSY95A	25	TIP41A	45	2N2218A	45	2N3906	10		
BC107B	12	BC184	10	BD222	85	BU205	160	TIP42A	45	2N2219A	25	2N4037	45		
▶BC108	9	BC184L	7	BF180	35	BU206	180	TIP120	90	2N2221A	25	2N4058	10		
BC108B	12	BC212	10	BF182	35	BU208	170	TIP121	90	2N2222A	20	2N4060	10		
BC108C	12	BC212L	10	BF184	25	MJ2955	99	TIP122	90	2N2368	25	2N4061	10		
▶BC109	9	BC213	10	BF185	25	MJE340	50	TIP141	98	2N2369	16	2N4062	10		
BC109C	12	BC213L	10	BF194	12	MJE520	65	TIP142	98	2N2484	25	2N5457	36		
BC114	18	BC214	10	BF195	12	MJE521	95	TIP147	110	2N2646	45	2N5458	36		
BC115	22	▶BC214L	8	BF196	12	MJE3055	70	TIP2955	60	2N2904	20	2N5459	30		
BC117	18	BC237	8	BF197	12	MPF102	40	TIP3055	55	2N2904A	20	2N5485	36		
BC119	35	BC238	14	BF198	10	MPF104	40	TIS43	40	2N2905	22	2N5777	45		
BC137	40	BC308	12	BF199	18	MPSA05	22	TIS44	45	2N2905A	22	2N6027	30		
BC139	40	BC327	14	BF200	30	MPSA06	25	TIS90	30	2N2906	25	40360	40		
BC140	28	BC328	14	▶BF244B	22	MPSA12	30	TIS91	30	2N2906A	25	40361	50		
BC141	30	BC337	14	BF245	30	MPSA65	30	VN10KM	45	2N2907	25	40362	50		
BC142	25	BC338	14	BF2568	45	MPSA56	30	VN46AF	75	2N2907A	25	40408	70		
BC143	25	BC477	30	BF257	32	MPSU05	55	VN66AF	85	2N2926	9				
BC147	8	BC478	30	BF258	25	MPSU06	55	VN88AF	95	▶2N3053	23				
BC148	8	BC479	30	BF259	35	MPSU55	60	ZTX107	8	2N3054	55				

LS TTL

		LS20	12	LS75	20	LS123	34	LS160	35	LS197	45	LS353	60		
		LS21	12	LS76	17	LS125	24	LS161	35	LS221	50	LS365	28		
		LS22	12	LS78	17	LS126	25	LS162	35	LS240	60	LS366	28		
LS00	11	LS26	14	LS83	35	LS132	35	LS163	35	LS241	55	LS367	28		
LS01	11	LS27	12	LS85	48	LS136	26	LS164	40	LS242	55	LS368	29		
LS02	11	LS30	12	LS86	16	LS138	30	LS165	55	LS243	55	LS373	58		
LS03	12	LS32	13	LS90	24	LS139	30	LS166	60	LS244	55	LS374	60		
LS04	12	LS37	14	LS92	25	LS145	70	LS170	75	LS245	70	LS375	43		
LS05	12	LS38	15	LS93	24	LS147	150	LS173	60	LS247	48	LS377	60		
LS08	12	LS40	13	LS95	38	LS148	75	LS174	45	LS251	28	LS378	57		
LS09	12	LS42	28	LS96	95	LS151	38	LS175	45	LS257	32	LS390	45		
LS10	12	LS47	35	LS107	40	LS153	38	LS190	35	LS258	32	LS393	40		
LS11	12	LS48	45	LS109	21	LS154	75	LS191	35	LS259	55	LS399	156		
LS12	12	LS51	14	LS112	21	LS155	33	LS192	35	LS266	20	LS541	78		
LS13	19	LS55	14	LS113	21	LS156	36	LS193	36	LS273	58	LS670	135		
LS14	30	LS73	18	LS114	22	LS157	26	LS195	32	LS279	30				
LS15	12	LS74	17	LS122	35	LS158	29	LS196	45	LS283	38				

TTL

		7413	17	7444	85	7483	30	74122	38	74181	46	74190	40		
		7414	23	7446	58	7485	60	74123	38	74162	46	74191	40		
		7416	19	7447	36	7486	19	74125	33	74163	46	74192	40		
7400	11	7417	19	7448	43	7489	180	74126	33	74164	46	74193	40		
7401	11	7420	14	7450	14	7490	19	74132	30	74165	46	74194	40		
7402	11	7421	19	7451	14	7491	34	74141	54	74167	150	74195	40		
7403	12	7422	19	7453	14	7492	24	74145	48	74170	115	74196	40		
7404	12	7427	18	7454	14	7493	24	74147	75	74173	58	74197	40		
7405	14	7428	25	7460	14	7494	33	74148	60	74174	53	74198	80		
7406	19	7430	13	7472	22	7495	33	74150	48	74175	45	74199	80		
7407	19	7432	20	7473	24	7496	38	74153	38	74176	35				
7408	13	7433	20	7474	19	7497	86	74154	47	74177	42				
7409	13	7437	23	7475	26	74100	78	74155	36	74179	75				
7410	13	7438	24	7476	25	74107	22	74156	36	74180	38				
7411	15	7440	14	7480	45	74109	24	74157	28	74181	100				
7412	17	7442	30	7482	65	74121	24	74160	56	74182	55				

SWITCHES

Submin toggle:
SPST 55p. SPDT 60p. DPDT 65p.
Miniature toggle:
SPDT 90p. SPDT centre off 90p.
DPDT 90p. DPDT centre off 100p.
Standard toggle:
SPST 35p. DPDT48p
Miniature DPDT slide 12p.
Push to make 12p.
Push to break 22p.
Rotary type adjustable stop.
1P12W, 2P6W, 3P4W all 55p each.
DIL switches:
4SPST 80p 6 SPST 80p. 8SPST 100p.

TRANSFORMERS

Please add carriage charges to our normal post charges.

Miniature mains:
606V, 909V, 12012V all @ 100mA 100p each.
PCB mounting. Miniature:
3VA 0-6, 0-6 @ 0.25A; 0-9, 0-9 @ 0.15A; 0-12, 0-12 @ 0.12A 200p each.
6VA 0-6, 0-6 @ 0.5A; 0-9, 0-9 @ 0.3A; 0-12, 0-12 @ 0.25A 270p each.
High quality. Split bobbin construction
6VA 0-6, 0-6 @ 0.5A; 0-9, 0-9 @ 0.4A; 0-12, 0-12V @ 0.3A 220p each.
12VA 0-6, 0-6 @ 1A; 0-9, 0-9 @ 0.8A, 0-12, 0-12 @ 0.5A; 0-15, 0-15 @ 0.4A 295p (plus 40p carriage).
25VA 0-6, 0-6 @ 1.5A; 0-9, 0-9 @ 1.2A; 0-12, 0-12 @ 1A; 0-15, 0-15 @ 0.8A 330p each (plus 60p carriage)
50VA 0-12, 0-12 @ 2A, 0-15, 0-15 @ 1.5A. 440p each (plus 75p carriage)

CAPACITORS

Polyester, radial leads, 250v. C280 type: 0.01, 0.015, 0.022, 0.033 - 6p; 0.047, 0.068, 0.1 - 7p; 0.15, 0.22 - 9p; 0.33, 0.47 - 13p; 0.68 - 20p; 1u - 23p
Electrolytic, radial or axial leads: 0.47/63V, 1/63V, 2.2/63V, 4.7/63V, 10/25V - 7p; 22/25V, 47/25V - 8p; 100/25V - 9p; 220/25V - 14p; 470/25V - 22p; 1000/25V - 30p; 2200/25V - 50p.
Tag end power supply electrolytics: 2200/40V - 110p; 4700/40V - 160p 2200/63V - 140p; 4700/63V - 230p
Polyester, miniature Siemens PCB: 1n, 2n2, 3n3, 4n7, 6n8, 10n, 15n, 7p; 22n, 33n, 47n, 68n, 8p; 100n, 9p; 150n, 11p; 220n, 13p; 330n, 20p; 470n 26p; 680n, 29p; 1u 33p; 2u2, 50p.
Tantalum bead:
0.1, 0.22, 0.33, 0.47, 1.0 @ 35V - 12p. 2.2, 4.7, 10 @ 25V - 20p; 15/16V - 30p; 22/18V - 27p; 33/16V - 45p; 47/6V - 27p; 47/16V - 70p; 68/6V - 40p; 100/10V - 90p.
Cer. disc. 22p-0.01u 50V, 3p each.
Mullard miniature ceramic plate: 1.8pF to 100pF 6p each.
Polystyrene, 5% tol: 10p-1000p, 6p; 1500-4700, 8p; 6800 0.012u, 10p.
Trimmers. Mullard 808 series: 2-10 pF, 22p; 2-22pF, 30p; 5.5-65pF, 35p

POTENTIOMETERS

Rotary. Carbon track Log or Lin 1K - 2M2. Single 32p. Stereo 85p.
Single switched 80p. Slide 60mm travel single Log or Lin 5K - 500K 63p each.
Preset submin. hor. 100 ohms -1M 7p each.
Cermet precision multiturn, 0.75W ¾" 100 ohms to 100K - 88p each.

TOOLS

Small trimming tool	22
Small pocket screwdriver	16
Large pocket screwdriver	13
8 piece precision screwdriver set in plastic case	170
Low cost side cutters	160
High quality side cutters	650
Low cost pliers	160
High quality pliers	650
Wire strippers	120
Expo reliant drill	695
Expo Titan drill	1025
Drill stand	1200
Reduced shank drill bits for above 0.8mm, 1mm, 1.4mm	60

VERO

VEROBLOC◀	350
Size 0.1 matrix:	
2.5 x 1	22
2.5 x 3.75	75
2.5 x 5	85
3.75 x 5	95
VQ board	160
Veropins per 100:	
Single sided	50
Double sided	60
Spot face cutter	105
Pin insertion tool	162
Wiring pen and spool	310
Spare spool 75p Combs	6

HARDWARE

PP3 battery clips	6
Red or black crocodile clips	6
Black pointer control knob	15
Pr Ultrasonic transducers	350
▶6V Electronic buzzer	60
▶12V Electronic buzzer	65
▶PB2720 Piezo transducer	75
▶64mm 64 ohm speaker	70
▶64mm 8 ohm speaker	70
20mm panel fuseholder	25

CONNECTORS

DIN	Plug	Skt	Jack	Plug	Skt
2 pin	9p	9p	2.5mm	10p	10p
3 pin	12p	10p	3.5mm	9p	9p
5 pin	13p	11p	Standard	16p	20p
Phono	10p	12p	Stereo	24p	25p
1mm	12p	13p	4mm	18p	17p

UHF (CB) Connectors:
PL259 Plug 40p. Reducer 14p.
SO239 square chassis skt 38p.
SO239S round chassis skt 40p.
IEC 3 pin 250V/6A.

Plug chassis mounting	38p
Socket free hanging	60p
Socket with 2m lead	120p

OPTO

▶3mm red	7	▶5mm red	7
▶3mm green	10	▶5mm green	10
▶3mm yellow	10	▶5mm yellow	10

Clips to suit - 3p each.

Rectangular		TIL32	40
▶red	12	TIL78	40
green	17	▶TIL111	60
yellow	17	ORP12	85
▶TIL38	40	TIL100	90
2N5777	45	Dual colour	60

Seven segment displays:

Com cathode		Com anode	
DL704 0.3"	95	DL707 0.3"	95
▶FND500		FND507	
0.5"	100	0.5"	100
TIL313 0.3"	115	TIL312 0.3"	115
TIL322 0.5"	115	TIL321 0.5"	115

LCD: 3½ digit 580p. 4 digit 620p.

REGULATORS

78L05	30	79L05	65
78L12	30	79L12	65
78L15	30	79L15	65
7805	35	7905	40
7812	35	7912	40
7818	35	7915	40
LM309K	130	LM723	35
LM317K	270	LM338K	475
LM317T	120	78H05 5A	
LM323K	350	▶5V	550

DIODES

BY127	12	▶1N4001	3
OA47	10	1N4002	5
OA90	8	1N4006	7
OA91	7	1N4007	7
OA200	8	1N5401	12
OA202	8	1N5404	16
1N914	4	1N5406	17
▶1N4148	2	400mW zen	6

BOXES

Plastic with lid + screws		Aluminium	
3x2x1"	70	3x2x1"	70
4½x3x1½"	88	4x3x1½"	85
3x2x1"	55	4x3x2"	100
4½x3x1½"	88	6x4x2"	120
7x4x2	160	6x4x3"	150

SCRs

▶C106D	30
400V 8A	70
400V 12A	95

BRIDGE RECTIFIERS

		2A 200V	40
		2A 400V	45
		6A 100V	80
		6A 400V	95
1A 50V	20	VM18 DIL 0.9A	
1A 400V	35	200V	50

MULTIMETERS

HT-120 4,000 opv
A smart looking 11 range pocket sized multimeter with an impressive spec. Complete with battery, etc. 650p each.
HT-320 20,000 opv.
Highly sensitive 19 range multimeter including transistor tester. Overload protection, DC volts - 1000, AC volts - 1000; DC current 0.25A. 4 resistance ranges. Complete with batteries, leads, etc. 1395p

RESISTORS

¼W 5% Carbon film E12 series 4.7 ohm - 1M. 1p each.
½W 5% Carbon film E12 series 4.7 ohm to 4M7 2p each.
¾W 1% metal film E24 series 10 ohm - 1M 6p each.

PCB MATERIALS

Alfac transfer sheets – please state type (e.g. DIL pads etc.) 45
Dalo etch resist pen 100
Fibre glass board 3.75"x8" 80
Ferric chloride 250ml bottle. 100

TRIACS

		400V 8A	65
		400V 16A	95
400V 4A	50	BR100	25

CABLES

20 metre pack single core connecting cable ten different colours. 65p

Speaker cable	10p/m
Standard screened	16p/m
Twin screened	24p/m
2.5A 3 core mains	23p/m
10 way rainbow ribbon	65p/m
20 way rainbow ribbon	120p/m

SOCKETS

	Low profile	Wire wrap
8 pin	6p	25p
14 pin	8p	35p
16 pin	9p	42p
18 pin	12p	52p
20 pin	13p	60p
22 pin	16p	70p
24 pin	18p	70p
28 pin	23p	80p
40 pin	25p	98p

Soldercon pins 60P/100

SOLDERING IRONS

Antex CS 17W Soldering iron	460
2.3 and 4.7mm bits to suit	65
CS 17W iron: 450, element:	210
Antex XS 25W	480
3.3 and 4.7mm bits to suit	65
Solder pump desoldering tool.	480
Spare nozzle for above	70
10 metres 22swg solder	100

COMPONENT KITS

An ideal opportunity for the beginner or the experienced constructor to obtain a wide range of components at greatly reduced prices. ¼W 5% Resistor Kit. Contains 10 of each value from 4.7 ohms to 1M (total of 650 resistors) 480
Ceramic Cap. kit. 5 of each value - 22p to 0.01u (135 caps) 370
Polyester Cap. kit. 5 of each value from 0.01 to 1uF (65 caps) 575
Preset kit. Contains 5 of each value from 100 ohms to 1M (total 65 presets 425
Nut and Bolt kit (total 300 items): 180p

25 6BA ¼" bolts	50 6BA washers	50 6BA nuts
25 6BA ½" bolts	25 4BA ¼" bolts	50 6BA washers
50 6BA nuts	25 6BA ½" bolts	

NEW CATALOGUE • NEW CATALOGUE!!!!!!!!

Our latest catalogue has just been released containing over 2000 stock lines all at extremely competitive prices backed by Rapid's return of post service. Stocks include Denco coils, tools, Verocases, data sheets etc. etc. Send 45p for your copy now (sent free of charge with all orders over £10).

The Rapid Guarantee

★ Same day despatch ★ Competitive prices
★ Top quality components ★ In-depth stocks

ORDERING INFO. All components brand new and full specification. All prices exclude VAT. Please add to total order. Please add 50p carriage to all orders under £15 in value. Send cheque/P.O. or Access/Visa number with order. Our detailed catalogue costs 45p (free with orders over £10). Callers most welcome. Telephone orders welcome with Access or Visa. Official orders accepted from colleges, Schools, etc. . . Callers most welcome, we are open Monday to Saturday.

BI-PAK BARGAINS

5T21 SCREWDRIVER SET
6 precision screwdrivers in hinged plastic case. Sizes — 0.8, 1.4, 2.2, 2.9 and 3.8mm **£1.75**

5T31 NUT DRIVER SET
5 precision nut drivers in hinged plastic case. With turning rod. Sizes — 3, 3.5, 4, 4.5 and 5mm **£1.75**

5T41 TOOL SET
5 precision instruments in hinged plastic case. Crosspoint (Phillips) screwdrivers — H.0 and H.1. Hex key wrenches — 1.5, 2 and 2.5mm **£1.75**

5T51 WRENCH SET
5 precision wrenches in hinged plastic case. Sizes — 4, 4.5, 5, 5.5 and 6mm **£1.75**

BUY ALL FOUR SETS 5T21, 5T31, 5T41 and 5T51 and get HEX KEY SET **FREE**. HEX KEY SET ON RING. Sizes 1.5, 2, 2.5, 3, 4, 5, 5.5 and 6mm. Made of hardened steel. HX/1 **£1.25**

"IRRESISTABLE RESISTOR BARGAINS"

Pak No.	Qty.*	Description	Price
SX10	400	Mixed "All Type" Resistors	£1
SX11	400	Pre-formed ⅛ ½ watt Carbon Resistors	£1
SX12	200	½ watt Carbon Resistors	£1
SX13	200	¼ watt Carbon Resistors	£1
SX14	150	½ watt Resistors 22 ohm 2m2 Mixed	£1
SX15	100	1 and 2 watt Resistors 22 ohm 2m2 Mixed	£1

Paks SX12-15 contain a range of Carbon Film Resistors of assorted values from 22 ohms to 2.2 meg. Save pounds on these resistor paks and have a full range to cover your projects.
*Quantities approximate, count by weight.

"CAPABLE CAPACITOR PAKS"

Pak No.	Qty.*	Description	Price
SX16	250	Capacitors Mixed Types	£1
SX17	200	Ceramic Capacitors Miniature Mixed	£1
SX18	100	Mixed Ceramics 1pf-56pf	£1
SX19	100	Mixed Ceramics 68pf-0.5mf	£1
SX20	100	Assorted Polyester/Polystyrene Capacitors	£1
SX21	60	Mixed C280 type capacitors metal foil	£1
SX22	100	Electrolytics all sorts	£1
SX23	50	Quality Electrolytics	£1

*Quantities approximate, count by weight.

BRAND NEW LCD DISPLAY MULTITESTER.

RE 188m
LCD 10 MEGOHM INPUT IMPEDANCE
• 3½ digit • 16 ranges plus hFE test facility for PNP and NPN transistors • Auto zero, auto polarity • Single-handed pushbutton operation • Over range indication • 12.5mm (½ inch) large LCD readout • Diode check • Fust circuit protection • Test leads, battery and instructions included

Max indication	1999 or — 1999
Polarity indication	Negative only. Positive readings appear without + sign
Input impedance	10 Megohms
Zero adjust	Automatic
Sampling time	250 milliseconds
Temperature range	— 5°C to 50°C
Power Supply	1 x PP3 or equivalent 9V battery
Consumption	20mW
Size	155 x 88 x 31mm

RANGES
DC Voltage 0-200mV, 0-2-20-200-1000V Acc. 0.8%
AC Voltage 0-200-1000V Acc. 1.2% DC Current 0-200uA, 0-2-20-200mA 0-10 A Acc. 1.2%
Resistance 0-2-20-200K ohms, 0-2 Megohms Acc. 1%
BI-PAK VERY LOWEST POSS PRICE
£35.00 each

GUARANTEED TO SAVE YOU MONEY

SX27A	60 Assorted Polystyrene Bead Capacitors Type 9500 Series PPD	£1.00
SX28A	50 Assorted Silver Mica Caps 5.6pF-150pF	£1.00
SX29A	50 Assorted Silver Mica Caps 180pF-4700pF	£1.00
SX30A	50 High Voltage Disc Ceramics 750V min up to 8KV. Assorted useful values	£1.00
SX31A	50 Wirewound 9 watt (larg) Resistors. Assorted values 1 ohm-12K	£1.00

AUTO SCREWDRIVER/DRILL

Automatic spiral ratchet. Complete with 2 screwdriver blades, 5 & 65mm, 1 screwedriver cross point No. 1 & three drills — 2, 2.8 and 3.65mm — A MUST FOR ALL HOBBY-BUILDERS & CONSTRUCTORS. Order No. ASD/1 **£3.50 each**

BARGAINS

SX91	20 x Large .2" RED LED	£1
SX42	20 small .125 Red LED's	£1
SX43	10 Rectangular Green LED's .2	£1
SX46	30 Assorted Zener Diodes 250mw-2 watt mixed voltages, all coded. New	£1
SX47	4 Black Instrument Knobs—winged with pointer ¼" Standard screw. Fit size 29 x 20mm	50p
SX49	20 Assorted Slider Knobs Black/Chrome, etc	£1
SX80	12 Neons and Filament Lamps. Low voltage and mains — various types and colours — some panel mounting	£1

SIREN ALARM MODULE

American Police type screamer powered from any 12 volt supply into 4 or 8 ohm speaker. Ideal for car burglar alarm, freezer breakdown and other security purposes. 5 watt, 12v max.

£3.85
Order No. BP124.

The Third and Fourth Hand...

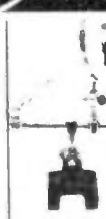

.... you always need but have never got until now. This helpful unit with Rod mounted horizontally on Heavy Base. Crocodile clips attached to rod ends. Six ball & socket joints give infinite variation and positions through 360°, also available attached to Rod a 2½ diam magnifier giving 2.5 x magnification. Helping hand unit available with or without magnifier. Our Price with magnifier as illustrated ORDER NO. T402 **£5.50**
Without magnifier ORDER NO. T400 **£4.75**

SX52
6 Black Heatsink will fit TO 3 and TO 220. Ready drilled. Half price value. £1

SX53 1 Power finned Heatsink. This heatsink gives the greatest possible heat dissipation in the smallest space owing to its unique staggered fin design, pre drilled TO 3. Size 45mm square x 20mm high **40p**

SX54 TO 66 size 35mm x 30mm x 12mm **35p**

SX55 1 Heat Efficiency Power Finned Heatsink 90mm x 30mm x 35mm High. Drilled to take up to 4 x TO 3 devices **£1.50 each**

SINGLE SIDED FIBREGLASS BOARD

Order No.	Pieces	Size	Sq.Ins.	Price
FB1	4	9 x 2½"	100	£1.50
FB2	3	11 x 3"	100	£1.50
FB3	4	13 x 3"	156	£2.00

DOUBLE SIDED FIBREGLASS BOARD

FB4	2	14 x 4"	110	£2.00

SILICON POWER TRANSISTORS — TO3

NPN like 2N3055 — but not full spec
100 watts 50V min
10 for £1.50 — Very Good Value
100s of uses — no duds
Order No. SX90

BI-PAK SOLDER-DESOLDER KIT

Kit comprises ORDER NO. SX80
1 High Quality 40 watt General Purpose Lightweight Soldering iron 240v mains incl 3/16" (4.7mm) bit
1 Quality Desoldering pump. High Suction with automatic ejection. Knurled, anti corrosive casing and teflon nozzle
1.5 metres of De-soldering braid on plastic dispenser
2 yds (1.83m) Resin Cored Solder on Card
1 Heat Shunt tool tweezer Type
Total Retail Value over **£12.00**
OUR SPECIAL KIT PRICE **£8.95**

BI-PAK PCB ETCHANT AND DRILL KIT

Complete PCB Kit comprises
1 Expo Mini Drill 10,000RPM 12v DC incl 3 collets & 1 x 1mm Twist bit
1 Sheet PCB Transfers 210mm x 150mm
1 Etch Resist Pen
1 ½lb pack FERRIC CHLORIDE crystals
3 sheets copper clad board
2 sheets Fibreglass copper clad board
Full instructions for making your own PCB boards
Retail Value over **£15.00**
OUR BI-PAK SPECIAL KIT PRICE **£9.75**
ORDER NO. SX81

PROGRAMMABLE UNIJUNCTION TRANSISTOR

"PUT" case T0106 plastic MEU22 Similar to 2N6027/6028 PNPN Silicon

Price	1-9	10-49	50-99	100+	Normal Retail
Each	20p	18p	15p	13p	Price £0.35 each

SX33A	6 small (min (SDST/SPDT Toggle Switches 240v 5amp	£1.00
SX35A	6 small (min) Rocker Switches 240v 5amp	£1.00
SX32A	*2 Assorted Jack & Phono plugs, sockets and adaptors, 2.5m, 3.5mm and standard sizes	£1.00
SX71	50 "C108" Fallouts" Manufacturers out of spec on volts or gain. You test	£1.00
SX72	A mixed bundle of Copper clad Board Fibre glass and paper Single and double sided. A fantastic bargain	£1.00

REGULATED VARIABLE *Stabilised* POWER SUPPLY

Variable from 2-30 volts and 0-2 Amps. Kit includes — 1 — VPS30 Module, 1 — 25 volt 2 amp transformer, 1 — 0-50v 2" Panel Meter, 1 — 0-2 amp 2" Panel Meter, 1 — 470 ohm wirewound potentiometer, 1 — 4K7 ohm wirebound potentiometer. Wiring Diagram included. Order No. VPS30 KIT **£20.**

MINIATURE FM TRANSMITTER

Freq: 95-106MHz. Range: ¼ mile
Size: 45 × 20mm. Add: 9v batt.
Not licenced in U.K.
ONLY £5.50
Ideal for: 007-MI5-FBI-CIA-KGB etc.

TECASBOTY

The Electronic Components and Semiconductor Bargain of the Year. A host of Electronic components including potentiometers — rotary and slider, presets — horizontal and vertical. Resistors of mixed values 22ohms to 2M2 — 1/8 to 2 Watt. A comprehensive range of capacitors including electrolytic and polyester types plus disc ceramics etcetera. Audio plugs and sockets of various types plus switches, fuses, heatsinks, wire, nuts bolts, grommets, cable clips and ties, knobs and P.C. Board. Then add to that 100 Semiconductors to include transistors, diodes, SCR's, opto's, all of which are current everyday usable devices in all a Fantastic Parcel. No rubbish all identifiable and valued in current catalogues at well over £25.00. Our Fight Against Inflation — Beat the Budget — Down with Depression. Price — **JUST £6.50.**

SX38	100 Silicon NPN Transistors—all perfect. Coded mixed types with data and eqvt sheet. No rejects. Real value	£3.00
SX39	100 Silicon PNP Transistors—all perfect. Coded mixed types with data and eqvt sheet. No rejects. Fantastic value	£3.00

2N3055 The best known Power Transistors in the World — 2N3055 NPN 115w. Our BI-PAK Special Offer Price:

10 off	50 off	100 off
£3.50	£16.00	£30.00

BD312 COMPLIMENTARY PNP POWER TRANSISTORS TO 2N3055. Equivalent MJ2955 — BD312 — TO3. **SPECIAL PRICE £0.70 each, 10 off £6.50**

MORE BARGAINS!

SX51	60 metres PVC covered Hook-up wire single and stranded. Mixed colours	£1
SX58	25 Assorted TTL Gates 7400 Series. 7401-7460	£1
SX59	10 Assorted flip Flops and MSI TTL	£1
SX60	20 Assorted Slider Potentiometers	£1
SX62	40 Assorted Pre-Sets Hor/Vert etc	£1
SX79	10 Reed Switches — glass type. 3 Micro Switches — with lever	£1

BI-PAK

Send your orders to Dept. EE3 BI-PAK PO BOX 6 WARE HERTS.
SHOP AT 3 BALDOCK ST. WARE HERTS.
TERMS: CASH WITH ORDER. SAME DAY DESPATCH. ACCESS, BARCLAYCARD ALSO ACCEPTED. TEL (0920) 3182. GIRO 388 7006
ADD 15% VAT AND 75p PER ORDER POSTAGE AND PACKING

Use your credit card. Ring us on Ware 3182 NOW and get your order even faster. Goods normally sent 2nd Class Mail.
Remember you must add VAT at 15% to your order. Total Postage add 75p per total order.

BI-PAK BARGAINS

TRIACS — PLASTIC

4 AMP — 400v — T0202 — TAG 136G.

1 OFF	10 OFF	50 OFF	100 OFF
40p	£3.75	£17.50	£30.00

8 AMP 400v — T0220 — TAG 425

60p	£5.75	£27.50	£50.00

SLIDER POTENTIOMETERS

Plastic 40mm Travel Mono

ALL AT 50p PER PAK

SX63 5 x 470 ohms Lin
SX64 5 x 1k Lin
SX65 5 x 22k Lin
SX66 5 x 22k Log
SX67 5 x 47k Lin
SX68 5 x 47k Log
SX69 5 x 100 Lin
SX70 5 x 1 meg Lin

SX40 250 Silicon Diodes—Switching like IN4148 DO-35 All good—uncoded Worth double our price 45v 75mA £1.25

SX41 250 Silicon Diodes—General Purpose like OA200/202 BAX13 16 Uncoded 30-100v 200mA DO-7 £1.25

SX44 10 5A SCR's T064 3 x 50v 3 x 100v 2 x 200v 2 x 400v Super value less than ½ price £1

SX45 10 5A SCR's T066 2 x 50v 2 x 100v 4 x 200v 2 x 400v All coded Brand new a give away at £1

MINIATURE TOOLS FOR HOBBYISTS

Miniature round nose side cutters — insulated handles 4½inch length. Order No Y043.

Miniature long nose pliers — insulated handles 5½inch length. Order No Y044.

Miniature bend nose pliers — insulated handles 5½inch length. Order No Y045.

Miniature end nippers — insulated handles 4½inch length. Order No Y046.

Miniature snipe nose pliers with side cutter and serrated jaws — insulated handles 5inch length. Order No Y042.

All with insulated handles

ALL AT 1.25 each

FLEXEY DRIVER

A flexible shaft screwdriver for those awkward to get at screws. Overall length 8½inch. Order No FS-1 Flat blade 4mm FS-2 Cross point no 1 £1.75 each.

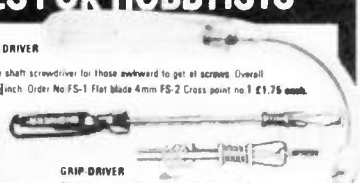

GRIP DRIVER

8inch long screwdriver with spring loaded grip on end to hold screws in position while reaching into those difficult places. Order No SD-1 Flat blade 4mm SD-2 Cross point no.0. 95p each

INEXPENSIVE TOOLS OF IMMENSE VALUE

Combined wire stripper, cutter, crimper incl. 25 asst terminals for crimping. Order No WS2. Our low price £1.20 each.

BA NUT DRIVER SET

Set of 5 BA spanner shafts plus universal handle in roll-up wallet. Sizes 0BA 2-4-6-8BA Order no: T192

£2.75 set

NEON SCREWDRIVER

7½in blade order no NS1 £0.85p each

5½in blade order no NS2 £0.50p each

Guarantee

Satisfaction or your money back has always been BI-PAK's GUARANTEE and it still is. All these Sale items are in stock in quantity and we will despatch the same day as your order is received

EXPERIMENTOR BOXES – ALUMINIUM – PLASTIC ALUMINIUM BOXES

Made with Bright Aluminium folded construction with deep lid and screws

SIZE "L	W	H	Order No	Price
5¼	2¼	1½	159	83p
4	2¼	1½	161	83p
4	2½	2	163	83p
3	2	1	164	67p
8	6	3	166	£1.08
6	4	2	167	£1.12

Plastic Boxes

Coloured Black Close fitting

Flanged Lid, fixing screws into brass bushes

SIZE "L	W	H	Order No	Price
4	2	1	141	£1.00
4¾	2½	1½	143	£1.30
6	3¼	2	144	£1.60
Plastic as above but with aluminium top panel				
4	2¾	1	146	£1.40
Plastic sloping front				
5½	4¼	2¼ slope to 1½	148	£2.14

All measurements for boxes are shown in inches. L = Length W = Width H = Height

IC SOCKETS

The lowest price ever.

The more you buy the cheaper they come!

Pin	10 off	50 off	100 off
8 pin	65p	£3.50	£6.00
14 pin	90p	£3.75	£6.50
16 pin	95p	£4.00	£7.00

VOLTAGE REGULATORS T0220

Positive +	Negative +
7805 — 50p	7905 — 55p
7812 — 50p	7912 — 55p
7815 — 50p	7915 — 55p
7824 — 50p	7924 — 55p

BI-PAK'S OPTO 83 SPECIAL

A selection of Large & Small size LED's in Red Green, Yellow and Clear, plus shaped devices of different types 7 Segment displays, photo transistors, emitters and detectors

Types like MEL11, FPT100 etc. Plus Cadmium Cell ORP12 and germ. photo transistor OCP71. TOTAL OF 25 pieces.

O/NO SX573

Valued Normal Retail £12.00

Our Price

£5.00

SEMICONDUCTORS FROM AROUND THE WORLD

100 A Collection of Transistors, Diodes, Rectifiers, Bridges, SCR's, Triacs, IC's both Logic and Linear plus Opto's all of which are current everyday usable devices

Guaranteed Value over £10 at Normal Retail Price

yours for only **£4·00**

Data etc in every pak Order No SX56

MW398 NI-CAD CHARGER

Universal Ni-Cad battery charger All plastic case with lift up lid Charge/Test switch LED indicators at each of the five charging points

Charges — PP3 (9V) U12 (1 5V penlite) U11 (1 5V C) U2 (1 5V D)

Power — 220-240V AC

Dims — 210 x 100 x 50mm

£6.95

POWER SUPPLY OUR PRICE £3.25

Power supply fits directly into 13 amp socket Fused for safety Polarity reversing socket Voltage switch Lead with multi plug Input 240V AC 50HZ Output 3 4 5 6 7 5 9 & 12V DC Rating 300 ma MW88

1 Amp SILICON RECTIFIERS

Glass Type similar IN4000 SERIES IN4001-IN4004 50 — 500v — uncod. 3 — you select for VLTS ALL perfect devices — NO duds Min 50v 50 for £1.00 — worth double ORDER NO SX76

Silicon General Purpose NPN Transistors TO-18 Case Lock fit leads — coded CV7644 Similar to BC147 — BC107 — ZT89 ALL NEW VCE 70v IC500mA Hfe 75-250

	50 off	100 off	500 off	1000 off
PRICE	£2.00	£3.80	£17.50	£30.00

Order as CV7644

Silicon General Purpose PNP Transistors TO-5 Case Lock fit leads coded CV9507 similar 2N2905A to BFX30 VC 60 IC 600mA Min Hfe 50 ALL NEW

	50 off	100 off	500 off	1000 off
PRICE	£2.50	£4.00	£19.00	£35.00

Order as CV9507

Silicon NPN 'L' Type Transitors

TO-92 Plastic centre collector

Like BC182L — 183L — 184L

VCBO 45 VCEO 30 IC200mA Hfe 100-400

ALL perfect devices — uncoded ORDER AS SX183L

50 off	100 off	500 off	1000 off
£1.50	£2.50	£10.00	£17.00

PNP SILICON TRANSISTORS:

Similar ZTX500 — ZTX214 — E-Line

VCEO 40 VCBO 35 Ic 300mA Hfe 50-400

Brand New — Uncoded — Perfect Devices

50 off	100 off	500 off	1000 off
£2.00	£3.50	£15.00	£25.00

Order as ZTXPNP

DIGITAL VOLT METER MODULE

3 x 7 segment displays Basic Circuit 0-2V± Instructions provided to extend voltage & current ranges. Operating voltage 9/12v. Typ. Power Consumption 50mA O/NO:SX99 Once only price

£9.95

ELECTRONIC SIREN 12v DC

Red plastic case with adjustable fixing bracket. Emits high pitched warning note of varying pitch 100 cycles per minute Dims 90mm (dia) 60mm (depth) Power 12 v DC

Our Price:- £5.50

SILICON BRIDGE RECTIFIERS

Comprising 4 × 1½ amp rectifiers mounted on PCB.

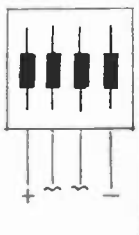

VRM — 150 vlts

IFM — 1.5 Amps

Size: 1 inch square

10 off £1.00

50 off £4.50

100 off £7.50

Order No. As:4RI BRect.

MULTITESTERS

1,000 opv Including test leads & Battery

AC volts - 0-15-150-500-1,000

DC volts - 0-15-150-500-1,000

DC currents - 0-1ma-150ma

Resistance - 0-2.5 K ohms 100 K ohms

Dims - 90 x 61 x 30mm

O/No.1322.OUR PRICE £6.50 ONLY

30,000 opv Including test leads and case

AC volts - 0.2.5-10-25-100-250-500-1,000

DC volts - 0-0.25-1-2.5-10-25-100-250-1,000

DC current - 0-50ua 0-5ma-50ma 0-12amps

Resistance - 0-6K ohms-70K ohms-6meg ohms-60meg ohms

Decibels - -20db to plus 56db

Short test - Internal buzzer

Dims - 160 x 110 x 50mm

O/No. 1315. OUR PRICE ONLY £24.75

DOME TWEETER

Dome Tweeter for systems up to 50w. Impedence 8 ohms. Frequency Response 2000-20000Hz. Dims 98mm dia × 31mm deep.

OUR PRICE £2.95. O/No. OMT200

SPECIAL OFFER OF STEREO AUDIO MODULES

Fully built and tested in our factory

A COMPLETE SET TO GIVE YOU **70** WATTS **TOTAL**

35 WATTS (rms) **PER CHANNEL** 55v POWER SUPPLY

Kit comprises:

2 × ALBO Power Amplifiers
1 × SPM120/55 Power Supply
1 × PA200 Stereo Pre-Amplifier
1 × Transformer 55v
1 × Front Panel – Black with White lettering
4 × Black Knobs with White Pointers
2 × Coupling Capacitors & 1 Reservoir Capacitor. Full hook-up chart

NORMAL RETAIL PRICE £52. COMPLETE **SAVING £14**

Our SPECIAL OFFER Price For 1 MONTH ONLY

Order by phone NOW with your Credit Card –

Ring: Sue on 0920 3442/3182 for immediate despatch

(Order as: SX70 watt AUDIO KIT)

£38 COMPLETE

BI-PAK

Send your orders to Dept. EE3 BI-PAK PO BOX 6 WARE HERTS. SHOP AT 3 BALDOCK ST. WARE HERTS TERMS: CASH WITH ORDER. SAME DAY DESPATCH. ACCESS, BARCLAYCARD ALSO ACCEPTED. TEL (0920) 3182 GIRO 388 7006 ADD 15% VAT AND 75p PER ORDER POSTAGE AND PACKING

Use your credit card Ring us on Ware 3182 NOW and get your order even faster. Goods normally sent 2nd Class Mail

Remember you must add VAT at 15% to your order Total Postage add 50p per Total order.

T.V. SOUND TUNER BUILT AND TESTED

In the cut-throat world of consumer electronics, one of the questions designers apparently ponder over is "Will anyone notice if we save money by chopping this out?" In the domestic TV set, one of the first casualties seems to be the sound quality. Small speakers and no tone controls are common and all this is really quite sad, as the TV companies do their best to transmit the highest quality sound.

Given this background a compact and independent TV tuner that connects direct to your Hi-Fi is a must for quality reproduction. The unit is mains operated.

This TV SOUND TUNER offers full UHF coverage with 5 pre-selected tuning controls. It can also be used in conjunction with your video recorder. Dimensions: 11¾" x 8½" x 3¼".

£22.95 + £2.00 p&p.

E.T.I. kit version of above without chassis, case and hardware. £12.95 plus £1.50 p&p.

PRACTICAL ELECTRONICS STEREO CASSETTE RECORDER KIT

£32.95 + £2.75 p&p.

• NOISE REDUCTION SYSTEM • AUTO STOP • TAPE COUNTER • SWITCHABLE E.Q. • INDEPENDENT LEVEL CONTROLS • TWIN V.U. METER • WOW & FLUTTER 0.1% • RECORD/PLAYBACK I.C. WITH ELECTRONIC SWITCHING • FULLY VARIABLE RECORDING BIAS FOR ACCURATE MATCHING OF ALL TAPES.

Kit includes tape transport mechanism, ready punched and back printed quality circuit board and all electronic parts. i.e. semiconductors, resistors capacitors, hardware top cover, printed scale and mains transformer. You only supply solder and hook-up wire.

Featured in April issue P.E. Reprint 50p. Free with kit.

Self assembly simulated wood cabinet · £4.50 + £1.50 p&p.

SPECIAL OFFER!
£31.00 plus £2.75 p&p
Complete with case.

BSR RECORD DECK

Manual single play record deck with auto return and cueing lever. Fitted with stereo ceramic cartridge 2 speeds with 45 rpm spindle adaptor ideally suited for home or disco.
13"x 11" approx. **£12.95** + £1.75 p&p.

SPECIAL OFFER! Replacement stereo cassette tape heads – £1.80 ea. Mono £1.50 ea. Erase 70p ea. Add 50p p&p to order.

Special Offer! AUDAX 45 WATT TWO WAY SPEAKERS

£36.95 a pair Plus £7.00 p&p

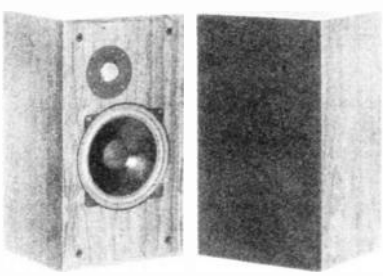

Originally made to sell for over £70. Unit comprises 8" bass/mid range and 4" soft dome tweeter and a 6 element crossover. Mirror image. Finished in rosewood. Size: 470mm high x 264mm wide x 225mm deep. Empty cabinets available separately if required. £9.95 pair + £4.75 p&p.

PERSONAL LS AMP KIT

Amplifier for your personal stereo cassette player as featured in January issue of Everyday Electronics. Turn your personal stereo into a mains powered home unit.

Parts: Stereo power amp PC8 with all components, £3.50 + 75p p&p. Power supply unit, £1.95 + £1.50 p&p. Pair of 4½" eliptical speakers, £1.50 the pair, + £1.00 p&p. Input & output sockets & plugs, £1.50. Recommended case (for the power supply and amp only), £2.95 + 80p p&p.
P&P inclusive price of £1.75 for two or more articles.

P.E. STEREO TUNER KIT

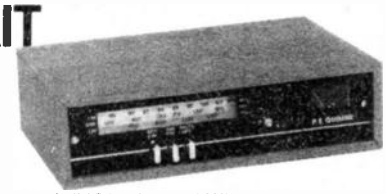

This easy to build 3 band stereo AM/FM tuner kit is designed in conjunction with Practical Electronics (July '81 issue). For ease of construction and alignment it incorporates three Mullard modules and an I.C. IF. System.
FEATURES: VHF, MW, LW Bands, interstation muting and AFC on VHF. Tuning meter. Two back printed PCB's. Ready made chassis and scale. Aerial: AM - ferrite rod, FM - 75 or 300 ohms. Stabalised power supply with 'C' core mains transformer. All components supplied are to P.E. strict specification, Front scale size: 10½" x 2½" approx. Complete with diagram and instructions.

£17.95
Plus £2.50 p&p.

Self assembly simulated wood cabinet sleeve to suit tuner only. Finish size: 11¾"x 8½"x 3¾".
£3.50 Plus £1.50 p&p.

SPEAKER KIT

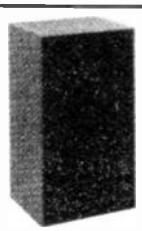

2 WAY 10 WATT

8" bass/mid range and 3¼" tweeter. Complete with screws, wire, crossover components and cabinet. All wood pre-cut – no cutting required. Finish - chipboard covered wood simulate. size 14½"x 8¾"x 4". PAIR for ONLY

£12.50 plus £1.75 p&p.

125W HIGH POWER AMP MODULES

KIT	BUILT
£10.50	£14.25
+ £1.15 p&p	+ £1.15 p&p

The power amp kit is a module for high power applications – disco units, guitar amplifiers, public address systems and even high power domestic systems. The unit is protected against short circuiting of the load and is safe in an open circuit condition. A large safety margin exists by use of generously rated components, result, a high powered rugged unit. The PC board is back printed, etched and ready to drill for ease of construction and the aluminium chassis is preformed and ready to use.
Supplied with all parts, circuit diagrams and instructions.

ACCESSORIES: Suitable mains power supply kit with transformer: £8.50 plus £2.00 p&p.
Suitable LS coupling electrolytic: £1.00 plus 25p p&p.

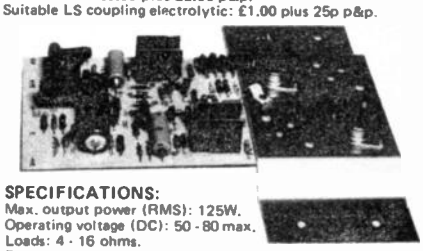

SPECIFICATIONS:
Max. output power (RMS): 125W.
Operating voltage (DC): 50 - 80 max.
Loads: 4 - 16 ohms.
Frequency response measured @ 100 watts: 25Hz - 20KHz.
Sensitivity for 100 watts: 400mV @ 47K.
Typical T.H.D. @ 50 watts, 4 ohms: 0.1%.
Dimensions: 205 x 90 and 190 x 36 mm.

PHILIPS CARTRIDGE

Model No. GP-397 III.
Specification: Output – 2mV. Separation – 22dB.
Stylus 0.6mm diameter. Useful replacement cartridge for: Audio Technica AT10, ADC QLM 30, Goldring G850/G800, Shure M3D, M70B, Tenorel T200 ID.

£3.95 each
Plus 60p p&p.

HI-FI SPEAKER BARGAINS

35 WATT MICRO 2-WAY SPEAKER SYSTEM

Unit comprises one 50w (4"app.) Audax soft dome tweeter HD100. And one 5" Audax bass/midrange 35w driver HIFIIJSM. Complete with 2 element crossover. Total impedance of system 4 ohms.

£8.95
PER SET + £2.70 p&p.

MONO MIXER AMP

Ideal for Church halls & Club houses.

£45.00
+ £2.00 p&p.

50 WATT Six individually mixed inputs for two pick ups (Cer. or mag.), two moving coil microphones and two auxiliary for tape tuner, organs, etc. Eight slider controls - six for level and two for master bass and treble, four extra treble controls for mic. and aux. inputs. Size: 13¾"x6½"x3¾" app: Power output 50 watts R.M.S. (cont.) for use with 4 to 8 ohm speakers. Attractive black vinyl case with matching fascia and knobs. Ready to use.

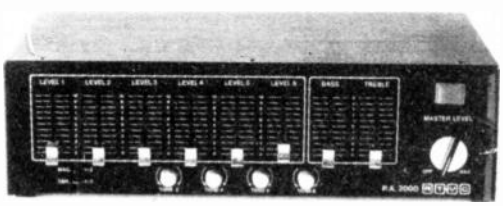

Matching AKG Microphone to suit (with speech and music filter). Complete with lead. ONLY £9.95 plus 75p p&p.

All mail to:
21A HIGH STREET, ACTON W3 6NG.
Note: Goods despatched to U.K. postal addresses only. All items subject to availability. Prices correct at 30/10/82 and subject to change without notice. Please allow 7 working days from receipt of order for despatch. RTVC Limited reserve the right to update their products without notice. All enquiries send S.A.E.

ALL CALLERS TO: 323 EDGWARE ROAD, LONDON W2. Telephone: 01-723 8432.
(5 minutes walk from Edgware Road Tube Station)
Now open 6 days a week 9 – 6. Prices include VAT.

Telephone or mail orders by ACCESS welcome.

RTVC

Everyday ELECTRONICS

VOL. 12 NO. 3 MARCH 1983

Editor
F. E. BENNETT

Assistant Editor
B. W. TERRELL B.Sc.

Production and News Editor
D. G. BARRINGTON

Projects Editor
G. P. HODGSON

Art Editor
R. F. PALMER

Assistant Art Editor
P. A. LOATES

Technical Illustrator
D. J. GOODING Tech. (CEI)

Secretary
JACQUELINE DOIDGE

Editorial Offices
KING'S REACH TOWER
STAMFORD STREET
LONDON SE1 9LS
Phone: 01-261 6873

Advertisement Manager
R. SMITH
Phone: 01-261 6671

Representative
R. WILLETT
Phone: 01-261 6865

Classified Supervisor
B. BLAKE
Phone: 01-261 5897

Make-Up and Copy Department
Phone: 01-261 6615

Advertisement Offices
KING'S REACH TOWER
STAMFORD STREET
LONDON SE1 9LS

TEST GEAR 83

It was as far back as 1974 that we published a comprehensive set of test instruments under the title *EE Test Gear Five*. This series proved to be very popular and instruments built to these designs will have been giving good service in workshops and dens up and down the country over the last nine years or so. Equipment of this kind generally has a long life. The devoted constructor or experimenter treats his equipment with respect and it is not likely to suffer misuse in the hands of others.

Electronic technology has of course been developing over these nine years and some different needs have arisen in regard to test equipment used in pursuance of our hobby. Such needs have been recognised and covered by individual items of equipment presented in our pages from time to time. Now the time seems right to present a new set of instruments. There is another reason also, that is to satisfy the needs of a new generation of readers. Over a period most hobbyists will acquire or build individual items of test gear, but acquisition on this casual basis is not the most ideal arrangement. Far better to have a set of co-ordinated units planned to give comprehensive facilities.

With the introduction of *Test Gear 83* constructors now have the opportunity to build a set of matching instruments designed to meet practically all requirements of the average hobbyist in the light of the present state of the art. The first instrument is covered in this issue and the remaining instruments will be published one per month in the following issues of EE.

The completed instruments will add distinction to the hobbyist's workshop and provide lasting evidence of their builder's skill. But far more important, this collection of test gear will be of incalculable value in the years ahead. *Test Gear 83* will prove a sound investment of time and money.

A GIFT FOR CONSTRUCTORS

Despite its simple appearance, the tool attached to our front cover will be an important accessory for the constructor's work bench. Anyone who assembles circuits will quickly discover how useful this wire bending gauge is in forming resistor and capacitor leads to suit horizontal or vertical mounting of these components and with a spacing to suit a selected number of holes on an 0·1 inch matrix board.

Fred Bennett

Readers' Enquiries

We cannot undertake to answer readers' letters requesting modifications, designs or information on commercial equipment or subjects not published by us. All letters requiring a personal reply should be accompanied by a stamped self-addressed envelope.

We cannot undertake to engage in discussions on the telephone.

Component Supplies

Readers should note that we do not supply electronic components for building the projects featured in EVERYDAY ELECTRONICS, but these requirements can be met by our advertisers.

All reasonable precautions are taken to ensure that the advice and data given to readers are reliable. We cannot, however, guarantee it and we cannot accept legal responsibility for it. Prices quoted are those current as we go to press.

Back Issues

Certain back issues of EVERYDAY ELECTRONICS are available worldwide price £1·00 inclusive of postage and packing per copy. Enquiries with remittance should be sent to Post Sales Department, IPC Magazines Ltd., Lavington House, 25 Lavington Street, London SE1 0PF. In the event of non-availability remittances will be returned.

Binders

Binders to hold one volume (12 issues) are available from the above address for £4·60 inclusive of postage and packing worldwide.
Please state which Volume.

Subscriptions

Annual subscription for delivery direct to any address in the UK: £12·00. Overseas: £13·00. Cheques should be made payable to IPC Magazines Ltd., and sent to Room 2613, King's Reach Tower, Stamford Street, London SE1 9LS.

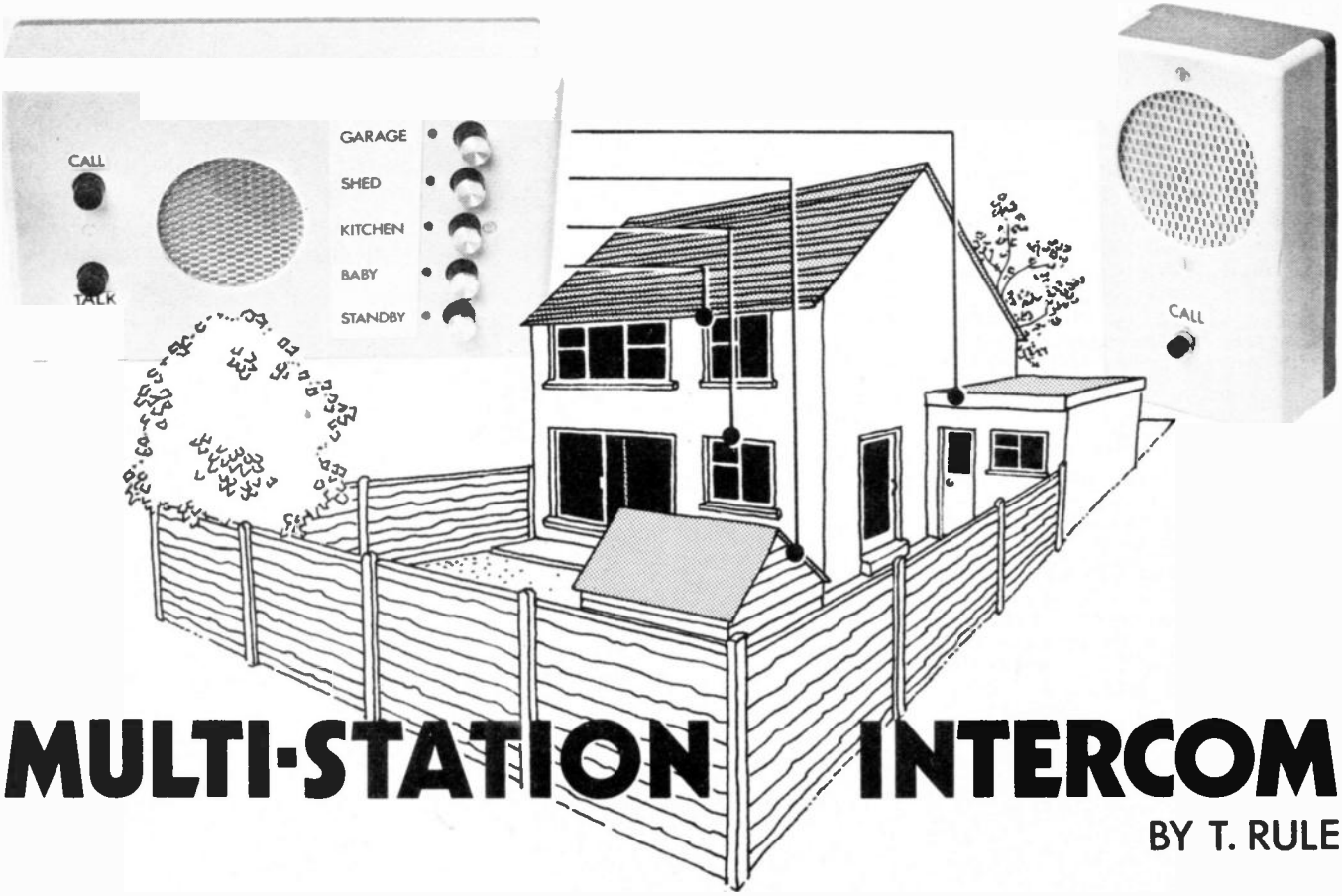

MULTI-STATION INTERCOM

BY T. RULE

THE unit to be described can be built to connect to any number of slave units via a two-wire interconnecting lead. Designed to provide private intercommunication between the master unit and any slave, it can also be used as a baby alarm or a general security system, and provides a means of listening into the slave units. For example, if a slave unit is mounted outside somewhere in the grounds of the property, it is possible to listen in on that unit for any intruders who may be nearby.

The basic unit described here has been built to supply four slave units and operate from a PP3 battery, and be used for simple intercom purposes. If it is intended for use as a baby alarm or security system a simple mains power supply should be used instead of the battery, but with a suitable switch to change over in the event of mains supply failure. A circuit for this is suggested.

DESCRIPTION OF SYSTEM

The unit is simple to construct and all parts are available from a number of advertisers. Fig. 1 shows a block diagram of the basic circuit. One speaker (LS2) is connected to the amplifier input via the PRESS TO TALK switch S1, and the other speaker LS1 is connected to the amplifier output. Pressing the switch to change over the two speakers enables communication from one to the other, depending on which one is used as the microphone at any time. The PRESS TO TALK switch is mounted on the master unit. In the standby position the slave speaker is used as a microphone and can be listened into by the master unit.

With a intercom system it is important to be able to "call" a selected slave or conversely for a slave to be able to "call" the master unit. This is made possible here by connecting some of the output back to the input via a phase-shift

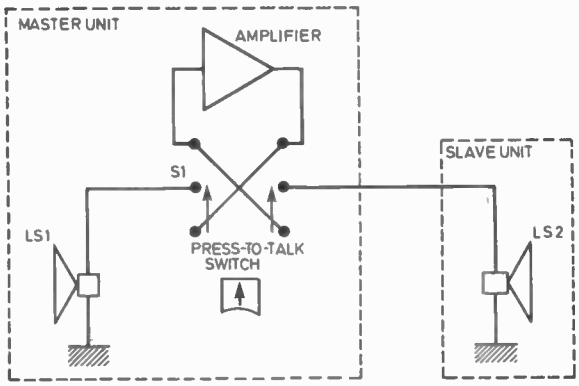

Fig. 1. Block schematic of the basic intercom circuit.

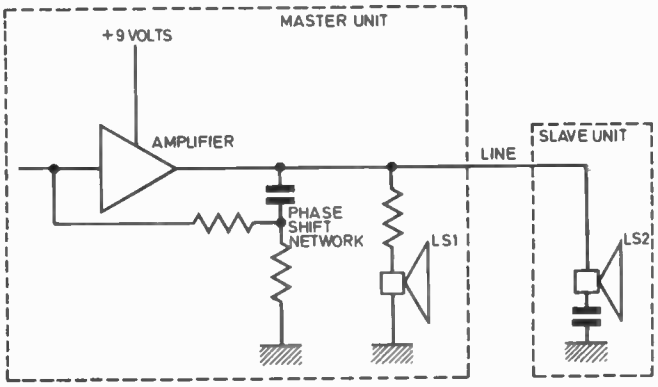

Fig. 2. Basic circuit when the master "calls".

network, so that oscillation at a suitable frequency takes place. Fig. 2 shows the basic arrangement when the master unit makes a call (no switching is shown).

When the slave unit calls, the circuit is slightly different and this is shown in Fig. 3. Closing the CALL switch on the slave connects the positive supply to the basic amplifier via the speaker voice coil and the diode rectifier. This enables the unit to oscillate as before and as the speaker is in series with the supply under calling conditions there is enough output for the calling tone to be heard at the slave position.

Once a call has been made in either direction the switching changes the circuit back to the basic arrangement shown in Fig. 1.

IDENTIFICATION OF CALLER

With a multi-slave intercom system some means of identification is needed so that the particular slave calling can be selected. This is achieved by the use of thyristors, the gates of which are connected to the lines so that when a slave unit calls and the positive supply is connected it also connects to the thyristor and turns it "on". An l.e.d. in its anode will then light and indicate which slave has called.

If a call is already in progress and another slave calls, the l.e.d. for that line will light indicating that a call is waiting, and it will stay alight until the line is selected. These additional calls do not interrupt the conversation already taking place, further, it is impossible for any slave to listen in on other lines.

THE COMPLETE CIRCUIT

The complete circuit is shown in Fig. 4 and at first glance may seem complicated. However much of the circuit is repeated from each slave line used. The number of lines which can be used is only limited by the amount of switching available and the size of the case used.

The circuit of Fig. 4 shows four slave units and this was felt to be the most which the average household would require. The switches are shown in the "standby" position (S3 depressed) and in this position the supply is disconnected.

COMPONENTS

Resistors

R1	1kΩ	R18	10kΩ
R2	68kΩ	R19	10kΩ
R3	100kΩ	R20	10kΩ
R4	4·7kΩ	R21	10kΩ
R5	390kΩ	R22	2·7kΩ
R6	47Ω	R23	2·7kΩ
R7	47kΩ	R24	2·7kΩ
R8	4·7kΩ	R25	2·7kΩ
R9	100kΩ		
R10	39kΩ		
R11	22Ω		
R12	820Ω		
R13	2·7kΩ		
R14	820Ω		
R15	820Ω		
R16	820Ω		
R17	820Ω		

All ¼W carbon film ±5%

See Shop Talk page 145

Potentiometer

VR1 10kΩ skeleton preset

Capacitors

C1	0·22μF polyester
C2	0·047μF polyester
C3	330pF polystyrene
C4	0·1μF 16V elect.
C5	22μF 16V elect.
C6	2·2μF 16V elect.
C7	100μF 16V elect.
C8	100μF polyester
C9	0·01μF 16V elect.
C10	100μF polyester
C11	100μF 16V elect.

All electrolytics are the small single-ended p.c.b. type

Semiconductors

TR1	BC414, BC109 or similar *npn* transistor
IC1	LM380 a.f. amplifier, 2W output 8Ω
D1–5	TIL209 l.e.d. (5 off)
D6–9	1N4148 diode (4 off)
CSR1-4	C103YY thyristor, gate current 0·2mA (4 off)

Loudspeakers

LS1,2 miniature, 8Ω, 70mm dia. approx. (2 off)

Sockets

SK1–5	jack socket, miniature (RS type 478-497) (5 off)
PL1–5	jack plug, miniature screened (RS type 478–380) (5 off)

Switches

S1,2	d.p.d.t. miniature push-button, momentary action (RS type 339–235) (2 off)
S3–7	d.p.c.o. push-button, break-before-make (RS type 388-434) (5 off) 5-switch latching assembly for interlocking operation (see text) (RS type 388–614). Push-button knobs (7 off) (RS type 339–263)
S8	s.p. miniature push-button, momentary make (RS type 337–914)

Miscellaneous

B1 PP3 battery

Printed circuit board; support pillars (2 off) (RS type 543–737); terminal pins; master unit case 188 x 110 x 60mm (RS type 509–585); slave unit case 120 x 65 x 40mm (RS type 509–579); plastic feet (for spacing sub-panel from case) (4 off) 12·7mm (RS type 543–327); connecting wire 7/0·2mm p.v.c. covered; screws; nuts; washers; solder tag; speaker mounting clips; battery connector.

COMPONENTS approximate cost £28 includes only one Slave

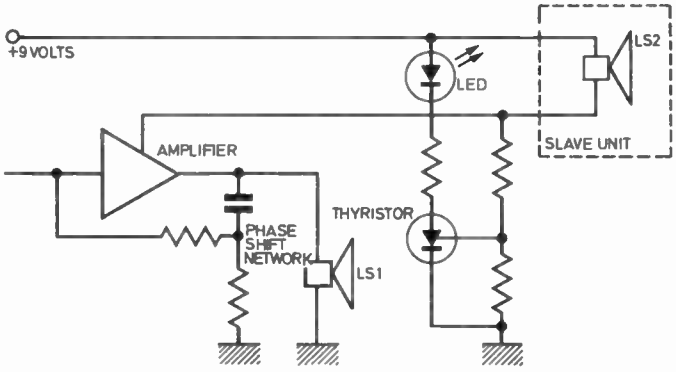

Fig. 3. Basic circuit when the slave "calls".

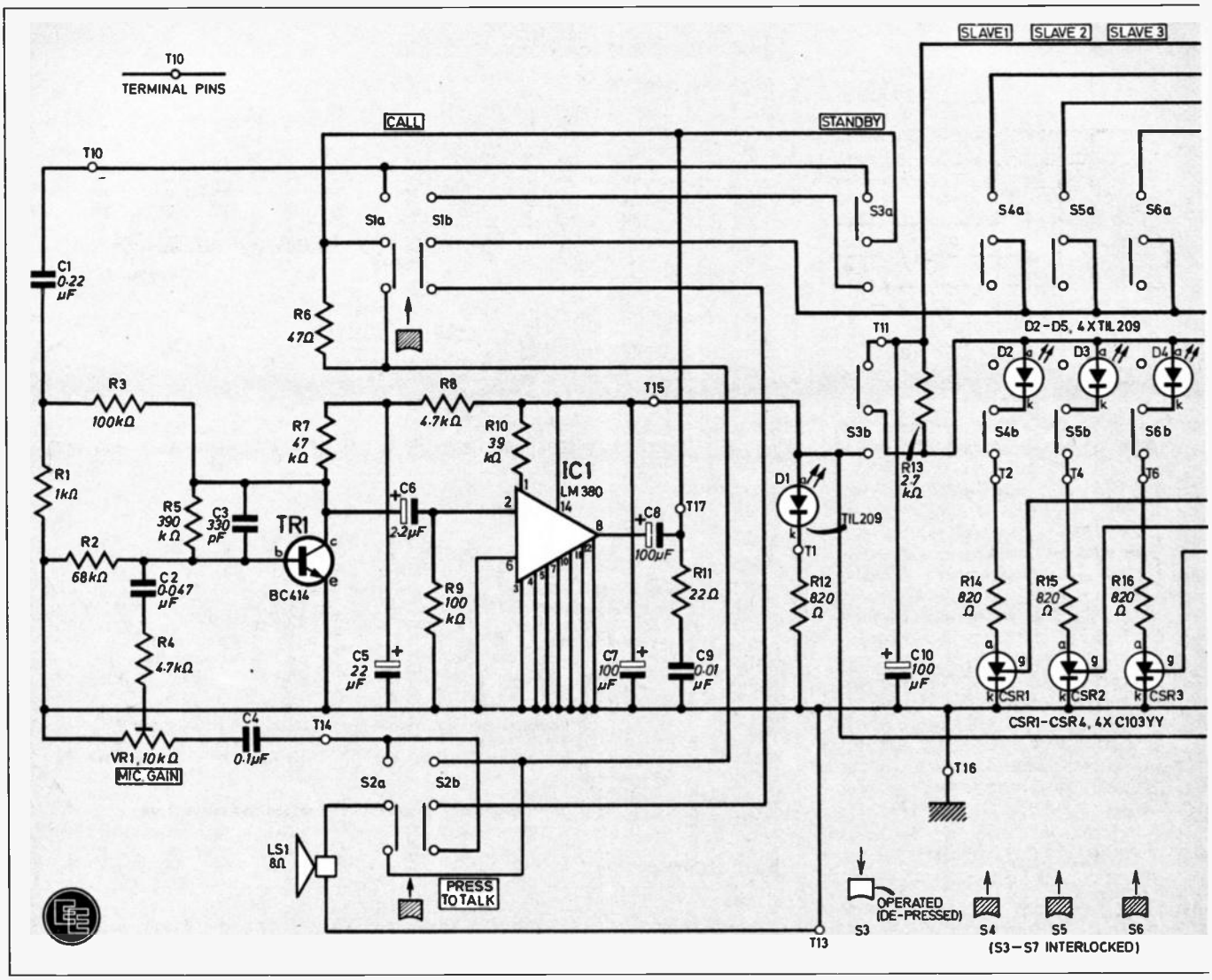

Fig. 4. Complete circuit diagram for the Multi-Station Intercom. All switches are shown in the standby position. The circuit for the slave unit is shown in the panel on the far right.

Switches S3 to S7 are interlocked push-button types and only one can be depressed at a time. Depressing a button automatically releases any other that may have been depressed.

The basic amplifier uses the LM380 integrated circuit IC1 but as this has a fixed gain an extra transistor stage TR1 has been added to improve the sensitivity.

If a slave is selected (assuming Slave 1) the speaker unit on that line will act as a microphone and is connected via S4a, S1b, and S2b to the input of TR1. The output of IC1 connects to the master speaker via S1a and S2a.

When S2 is pressed to change over the connections the two speaker systems are reversed and the master speaker becomes the microphone and the slave the speaker.

CALLING A SLAVE

A slave is selected by pressing S4, S5, S6 or S7. The slave is then called by pressing switch S1. The power supply is then connected via S3b (now in the lower position) and some of the output of IC1 is connected to its input via C7, S1a, C1, R1, R2, C5, causing the amplifier to oscillate. At the same time the slave speaker is connected to the output of IC1 via S1b and S3a (now in its lower position). The master speaker is also connected to the output but via a limiting resistor R3 to reduce the volume of the calling tone.

Releasing S1 reverts the circuit back to its normal mode and two-way communication can take place. The PRESS TO TALK switch S2 MUST be pressed each time the master speaks in order that its speaker becomes the microphone and the slave the loudspeaker.

SLAVE TO MASTER

With all switches in the standby position, if a slave calls the positive supply is connected to the amplifier IC1 via the slave speaker voice coil, and D9 (assuming Slave 1 is calling). The supply is also connected to the gate of CSR1 via R18 turning it "on" and so lighting up D2.

As some of the output from IC1 is connected to its input via S3a in the "standby" position the circuit will oscillate and put a tone onto the master unit speaker. This tone will also be heard at the slave due to its speaker being in series with the supply to IC1.

The master unit then selects the line calling and the circuit again reverts back as shown in Fig. 1.

Selecting the calling line also disconnects the supply to the thyristor CSR1 via S4b and switches off the l.e.d. indicator D2. An l.e.d. indicator D1 is also connected to the IC1 supply and indicates when the unit is "on". To check that the whole system is "off" with no calls waiting it is only necessary to check that all the l.e.d.s are extinguished.

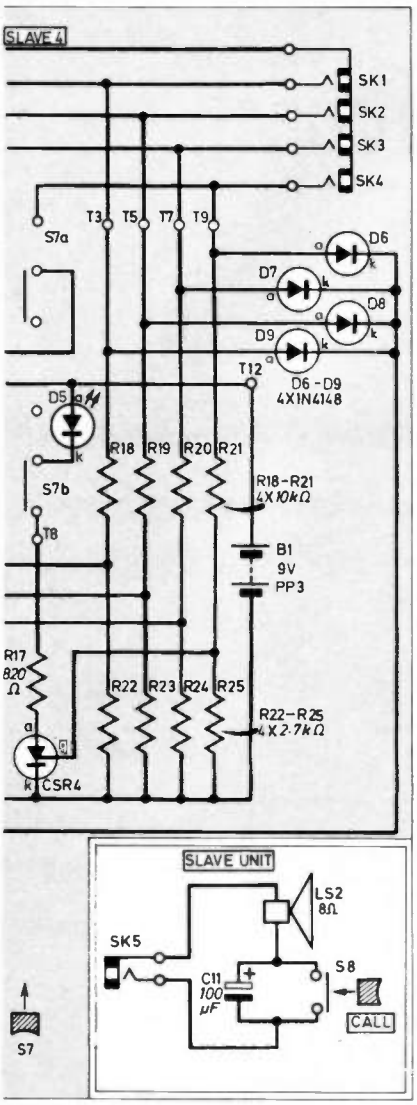

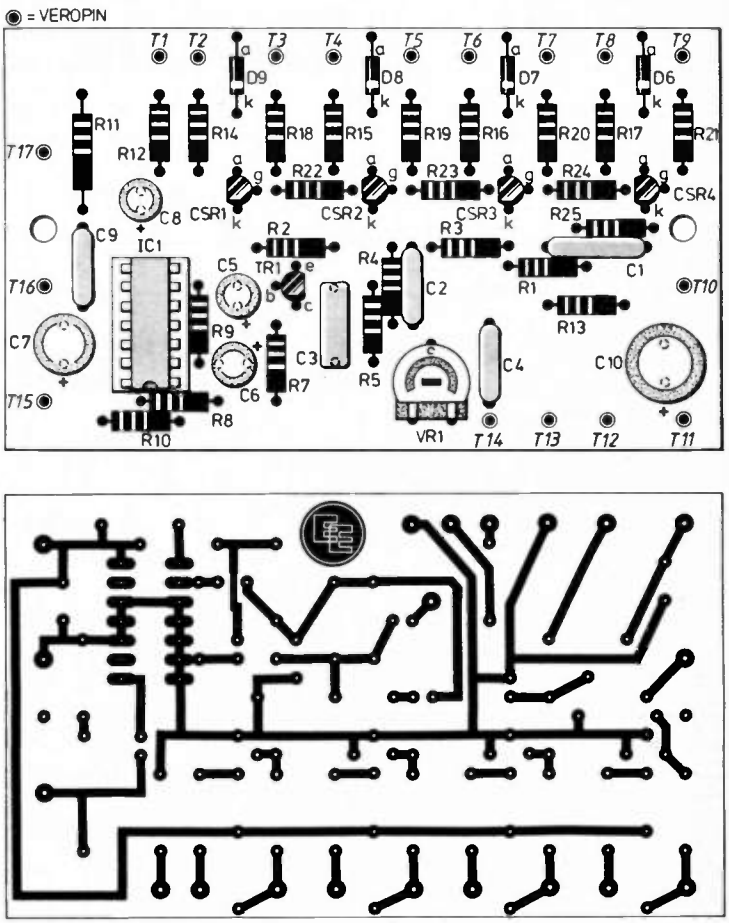

Fig. 5. Component layout on the topside of the circuit board and full size printed circuit board master.

SENSITIVITY CONTROL

A preset potentiometer VR1 is provided so that the sensitivity can be adjusted to a suitable level, however this control will normally be used in its maximum position if monitoring of a slave is desired.

The actual audio frequency of the calling tone will be dependent on a number of things, for example, the type of speakers used, state of the battery voltage, etc. The frequency can be modified by changing the values of C1 and/or R1. In any event the tone produced when called by a slave will be lower in pitch than when the master unit calls and C1 and/or R1 may need adjusting for the most suitable sound.

Note that R13 is shorted out when in the "standby" position. This enables the full supply voltage to be applied to IC1 (for calling) via the line and slave unit. When the line is selected this resistor maintains voltage on the line to operate the thyristors should another line call, but allows an "audio earth" via C10 for the slave speaker/microphone. If the audio earth was via the supply line, instability would result.

CONSTRUCTION

One printed circuit board is used and this carries the bulk of the components. The full-size pattern appears in Fig. 5. Be careful to maintain the correct polarity of all electrolytics and diodes and also check the position of pin 1 of the LM380 before soldering it into place or plugging into a socket.

WIRING

There is a considerable amount of hard wiring on this project and, although the actual layout is not critical, care should be taken regarding connections to the various switches. It is suggested that suitable coloured leads be wired to the switches first and then the p.c.b. placed into position and its terminal pins connected up. Leave the leads long enough so that the board can be lifted clear for any servicing that may be required at a later date. The full interwiring is shown in Fig. 6.

SUB-PANEL

All components are mounted on a sub-panel as shown in Fig. 7. Mark out the aluminium accurately but only pilot drill in the first instance with a 1mm drill. By doing this the sub-panel can be used as a marking template for the front panel of the case, thus ensuring exact register of the two sets of holes.

Note that certain holes are NOT required in the front panel, these are holes lettered "A" and "E".

MULTI-STATION INTERCOM

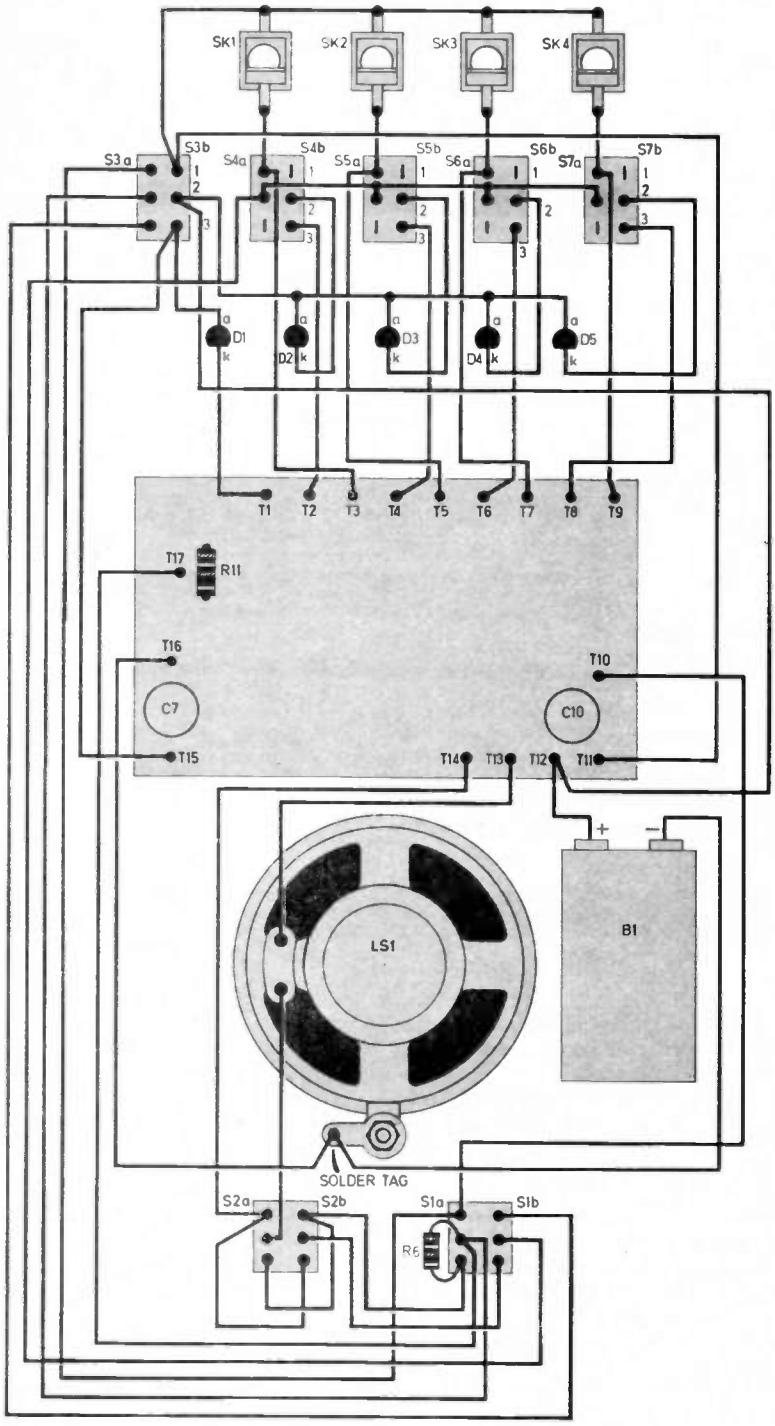

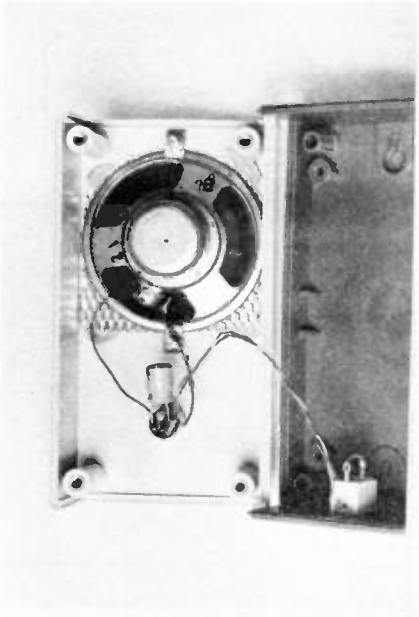

Wiring and component layout inside the completed slave unit.

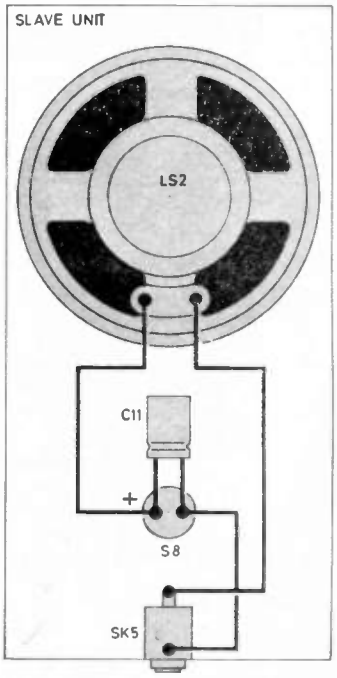

Fig. 6. Interwiring details for the master control and one slave unit. The case mounted components have been laid "flat" for clarity of wiring.

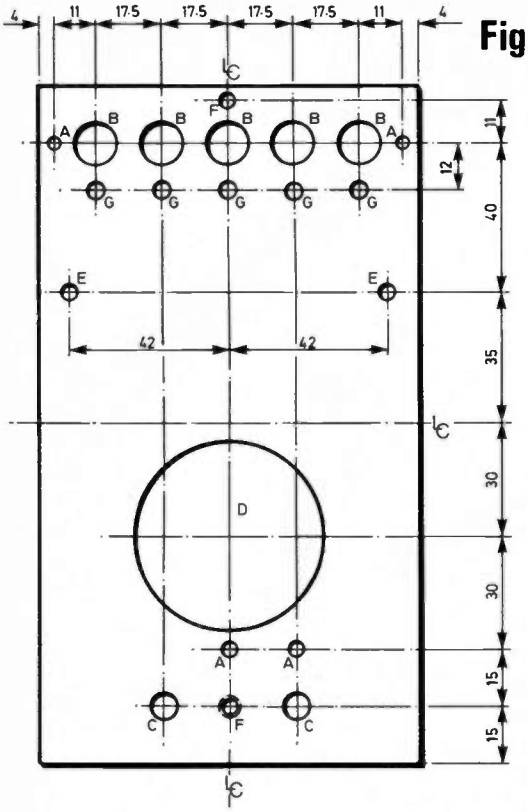

Fig. 7

HOLE mm	A	B	C	D	E	F	G
SUB PANEL	3	11	6.5	50	4	3	SEE TEXT 1
FRONT OF CASE	–	11	11	50	–	3 C' SUNK	TO SUIT LED SEE TEXT

NOTES: DRILL ALL HOLES 1mm DIA & USE AS FRONT PANEL TEMPLATE BEFORE MAKING FULL SIZE
HOLES 'G' TO FRONT PANEL ONLY

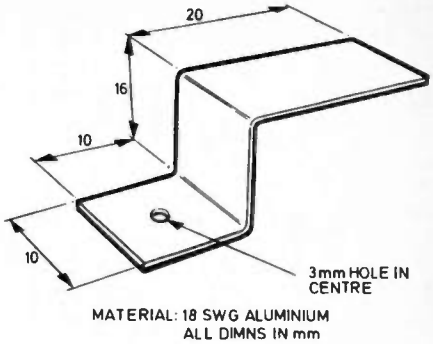

Fig. 8

Fig. 7. Measurement and drilling details for the sub-panel.

Fig. 8. Details of the battery bracket.

Fig. 9. Drilling details for the end panel of the master unit case.

Fig. 10. Slave panel drilling details. A 6·2mm hole should be made in the centre of the end panel for the slave jack socket.

Fig. 11. Suggested sub-assembly for the five indicator l.e.d.s.

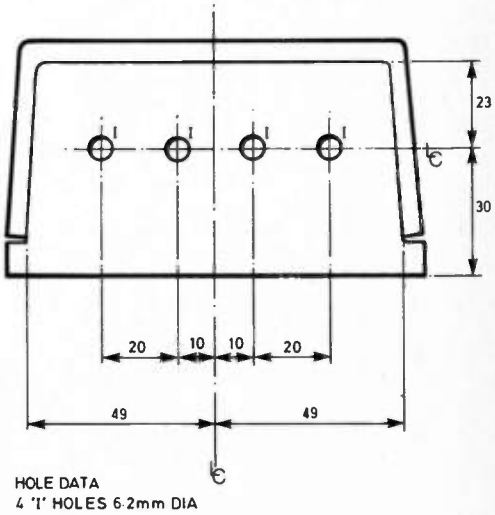

Fig. 9

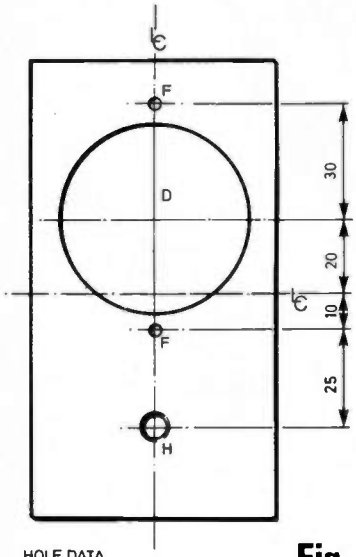

HOLE DATA
1 'D' HOLE 50mm DIA
2 'F' HOLES 3mm DIA
1 'H' HOLE 7mm DIA

1 JACK (SK5) HOLE 6·2mm DIA
(IN CENTRE OF END PANEL)

Fig. 10

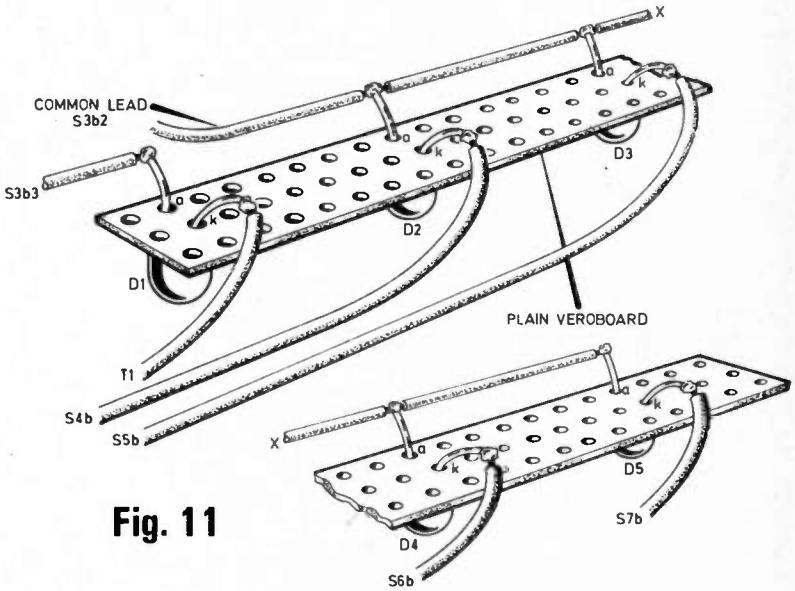

Fig. 11

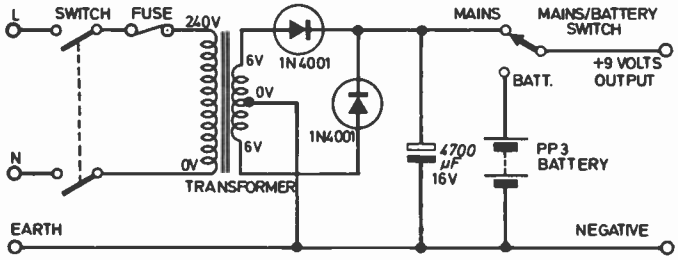

Fig. 12. Suggested circuit diagram for a mains/battery power supply.

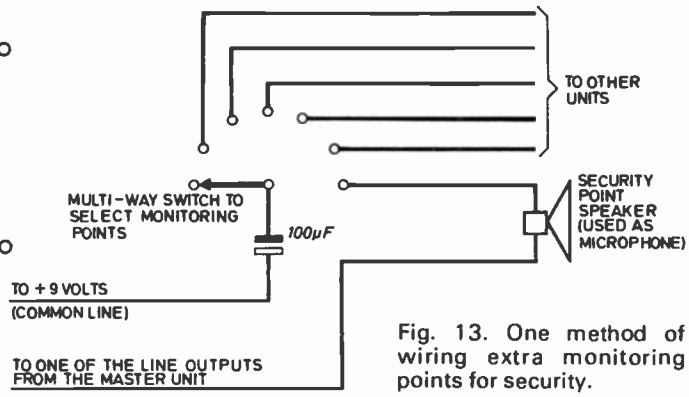

Fig. 13. One method of wiring extra monitoring points for security.

Four plastic feet are fitted to the inside of the case to maintain the correct distance between the sub-panel and case. Two 6BA screws with nuts for spacers are also used to hold the sub-panel in position.

A small metal bracket holds the PP3 battery in place and this is made as shown in Fig. 8. This bracket is not required if a mains power supply is used.

CASE DRILLING

Fig. 9 shows the holes required in the end of the case for the miniature jack sockets and Fig. 10 shows the drilling required for the slave units. When cutting the 50mm hole in the cases a "Q" Max cutter can be used but warm the case to about 20°C before cutting (warm the cutter as well); this will enable the plastics case to be cut cleanly without splitting. If cutting is attempted with the plastic very cold it *will* split.

LED ASSEMBLY

The l.e.d.s are held in place by first mounting onto a strip of plain perforated board, Fig. 11, and a strip of foam mounted along its back. This sub-assembly is then sandwiched between the case and sub-panel. Using a 0·1in. board the l.e.d.s will be spaced every seven holes, that is, six holes between each l.e.d. In any event the l.e.d.s should be a firm fit into the holes in the case, but the use of this extra mounting strip makes for easy handling during wiring and assembly, or when servicing, as the five l.e.d.s can be handled as a single assembly.

The loudspeaker apertures are covered with a suitable fret before final assembly and this may be either a metal or cloth type. Metal is preferred as it will provide greater protection for the speaker units. The fret is held in place by the use of white Bostik (the writer uses Bostik 4 multi-tile adhesive).

The cases specified have special mouldings in the backs which can be knocked out to provide holes for fixing the units to a wall. Depending on the labelling, the units can be mounted either way round.

MOUNTING THE SUB-PANEL

When mounting the five-way push-button unit onto the sub-panel, space it away from the panel approximately 7mm, by using 6BA screws with nuts as spacers. This ensures the actual buttons will be at the same height as the "call" and "PT" buttons. To ensure smooth operation of the buttons it is important that all burrs are removed from the holes in both the sub-panel and case.

Completed prototype of the master unit. The plain perforated board has been replaced by a printed circuit board.

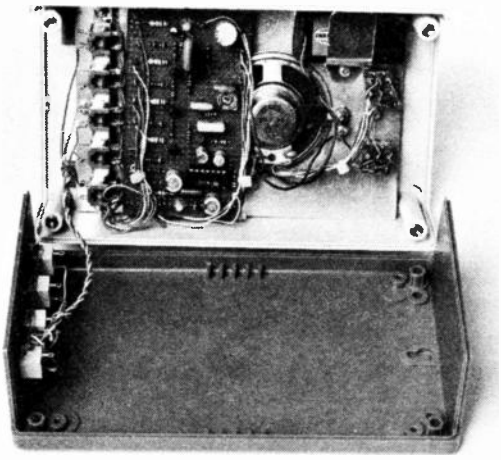

INSTALLATION

No problems should be encountered here as the "lines" are low impedance and only passing a very low current, a few milliamps. Standard type bell wire may be used for indoor wiring but if cable runs are made outdoors bell wire will be unsuitable as it is not weather-proof. For outdoor cable runs p.v.c. covered cable should be used. On NO account must any direct connection be made between these "lines" and the mains or telephone wires, they may however be laid alongside such cables if this is unavoidable. In this event some mains borne interference may be heard on the intercom system. Each end of a "line" should be terminated with a 3·5mm miniature jack plug which is then plugged into the slave unit.

OPERATION

Select the line required, sounds should be heard from the slave unit (assuming that someone is there). Press the CALL button, a tone should be heard at both ends of the line. When the slave answers, press the PRESS TO TALK button before speaking and release it to listen.

When on standby, a "slave" may be called by pressing the CALL button. Again a tone should be heard at both ends. Select the line that is calling and press the PRESS TO TALK button to answer, release to listen again.

As each slave calls, the appropriate l.e.d. should indicate which line has called. If a conversation is in progress and another slave calls, the l.e.d. will indicate that a call is waiting, and this can be answered by selecting that line and either dealing with the call or asking them to wait until you can call back. If a conversation is already in progress, no tone will be heard if additional lines call in.

MAINS POWER SUPPLY

If several slave units are being used, it would be wise to operate the system from the mains. A suggested circuit for this is shown in Fig. 12. An extra jack socket should be fitted to the master unit and the battery connections taken to this with a suitable lead then going to the power supply.

USE AS A SECURITY UNIT

By using the circuit shown in Fig. 13 any number of extra "microphones" can be selected so that it is possible to listen in to a number of positions. It is not possible for these to call the master, although the master can call them if required and engage in normal two-way communication. This facility could also be useful where, for example, a number of children's rooms need to be monitored. Other uses will no doubt come to mind. □

By Dave Barrington

Screened Plastic Boxes

The complete BIM2000 range of plastic multi-purpose cases from Boss are now available internally coated with 0·05mm thick, black EMI/RFI conductive shielding.

Having all the normal electrical screening protection facilities associated with steel or diecast aluminium enclosures, it is claimed that these ABS boxes also have the added advantage of light weight and easy drilling.

Available initially in black only, the deep profile lids are firmly secured to the base by screws running into brass hank bushes which not only ensure a good electrical connection for total screening but also provide protection against the ingress of moisture.

The cases are moulded in seven sizes ranging from 100 × 50 × 25mm to 190 × 110 × 90mm. For further details of the complete range contact: Boss Industrial Mouldings Ltd., Dept EE, James Carter Road, Mildenhall Suffolk IP28 7DE.

Catalogue

A new shortform hobbyist catalogue featuring a wide range of products for the electronics enthusiast has just been issued by the Retail Division of BICC-Vero.

Products covered in the 6-page colour catalogue include circuit boards, solderless breadboards, boxes, tools and a wide range of accessories.

Copies of the "The Hobby Herald" catalogue are available Free from BICC-Vero Packaging, Dept EE, Retail Department, Industrial Estate, Chandlers Ford, Eastleigh, Hants SO5 3ZR. A large stamped addressed envelope would be appreciated.

Coloured Knobs

A new range of control knobs, with coloured caps and "skirts", are now being stocked by Ambit International.

These knobs are from the well-known Ritel of Switzerland range and at present consist of matt black bodies with a selection of different coloured caps, pointers, skirts and dials. They also feature push-fit brass collet fixing.

Another ten finishes are available to special order. For more details of the complete range contact: Ambit International.

CONSTRUCTIONAL PROJECTS

Car Thermometer

The most expensive item in the *Car Thermometer* is the temperature sensing device and could cause purchasing problems.

The case of this device is stamped with the type number 590kH and as far as we have been able to establish is only stocked by RS Components (order code 308-809). This is an expensive item.

We would point out that RS Components will only supply to *bona fide* traders and readers will have to order through their local component supplier. If any readers are able to "throw" any further light on a source of supply, or equivalent, for the temperature sensor we will be pleased to hear from them.

This project has been specially designed to fit into a small hand-held case with sloping display panel. This case is available from Lascar Electronics Ltd., Dept EE, Module House, Whiteparish, Salisbury. It is also available from Verospeed, Dept EE, Boyatt Wood, Eastleight, Hants SO5 4ZY, and is listed as a hand-held case for digital panel meter (stock no. 89-25463J).

Dual Power Supply

The mains transformer used in the prototype *Dual Power Supply* was custom-made by Samson's (Electronics) Ltd., Dept EE, 9 Chapel Street, London NW1. A similar mains transformer with 24V 1·5A and 9V 1·5A secondaries could be used but, because of physical size, may require altering the layout within the case.

The heatsink and meter were purchased from Ambit International and the Sifram front panel knobs are stocked by Electrovalue and Marshall's.

It is quite in order to use 0·47Ω 3W wire-wound resistors for R1 and R8.

Multi-Station Intercom

The two-tone moulded plastics cases called for in the *Multi-Station Intercom* are Verobox types and should be available from most component suppliers. Stockists include Bi-Pak, Maplin, Magenta, Electrovalue, and Verospeed.

The sockets SK1 to SK5 are 3·5mm miniature types with normal closed contacts. All the interlocking switches (S3 to S7), mounting plate and knobs are available from Maplin.

The thyristors (CSR1 to CSR4), type C103YY, appear to be only available from RS Components.

Expanded Add-On Keyboard for the ZX81

It is quite possible that many of the add-on keyboards now on the market could benefit from the *Expanded Add-On Keyboard for the ZX81* project, however, these have not been investigated by us. The keyboard used in the prototype was obtained from Redditch Electronics (Dept. EE), 21 Ferney Hill Avenue, Redditch, Worcs B97 4RU.

The additional keyboard switches and switch "tops" are available from Redditch or Maplin. The Verostrip is available from Vero Electronics.

Buzz Off

The 12V audible warning device used in the prototype of the *Buzz Off!* model was obtained from RS Components, stock number 248-808. However, most of the solid-state buzzers on the market are rated from 6V to 20V operation and could be used.

These devices appear to be about half the price of the RS item. Stockists of these buzzers include Electrovalue, Maplin, Magenta, TK Electronics and Ambit.

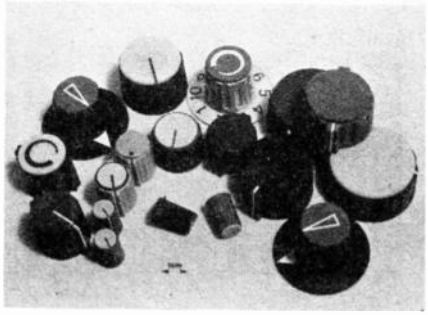

Selection of control knobs from Ambit International.

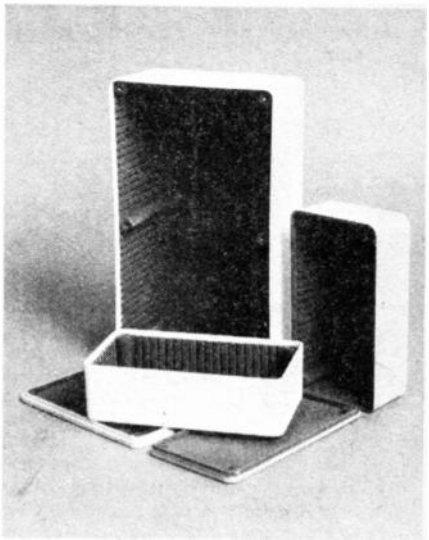

New range of "screened" plastic cases from Boss Industrial Mouldings Ltd.

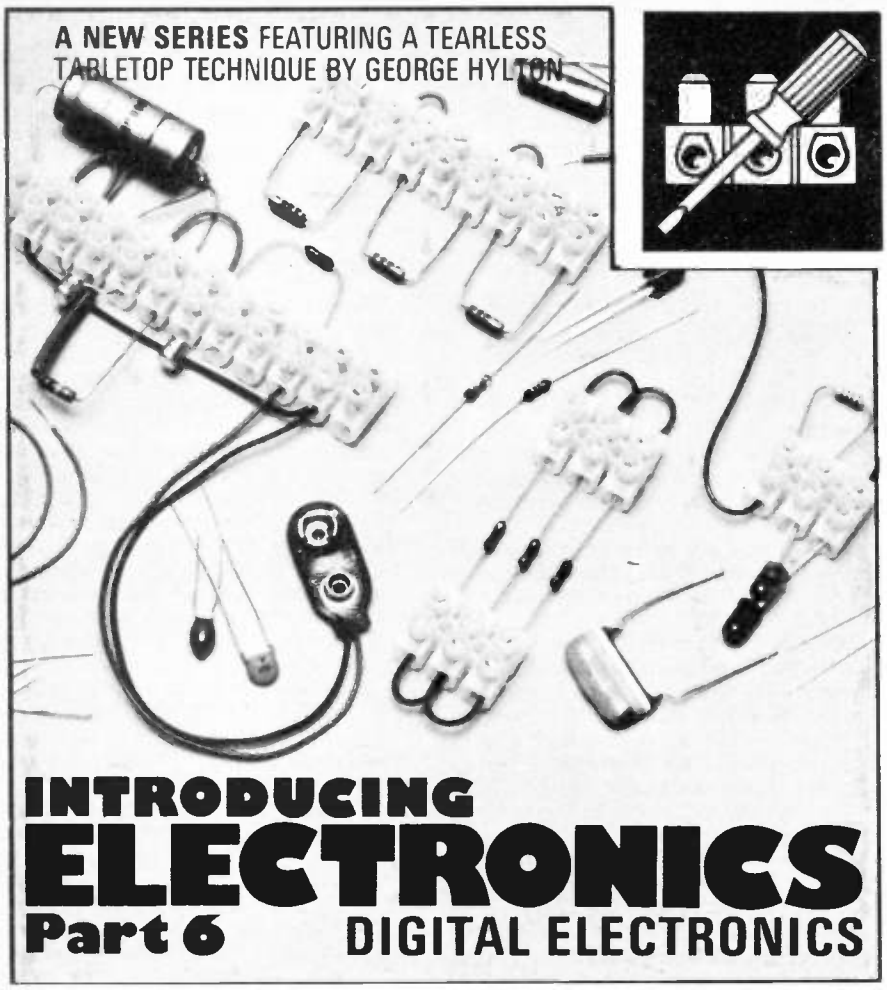

INTRODUCING ELECTRONICS

Part 6 DIGITAL ELECTRONICS

IN THIS, the last of the present series, we'll take a quick look at digital electronics. Since this topic includes practically the whole of computing and much of modern communications, it will have to be a rather superficial look. However, interested readers can obtain more detailed knowledge, in a painless way, by following *The Electronics of Information Technology* now running in this magazine.

DIGITS: WE ALL KNOW THEM

There's nothing strange about digits. We have five on each hand. Most of us learn to count on them, thereby gaining our first practice in digital computing! We are also familiar with the idea of sending messages in Morse Code, an early form of digital communication.

BACON AND BINARY

It all started long before the electrical age. When the Spanish Armada appeared in the Channel, warning beacons were lit on hilltops to send the message across the country. A beacon is either lit or not. This *on-or-off* feature is characteristic of digital communications.

Of course, you can light one beacon for an early warning, two for a more urgent one and three for imminent danger —but the on-off nature of the individual fire remains.

This is in distinction from *analogue* signals, where the intensity of the signal is varied in step with the information to be conveyed, as in a.m. radio where the strength of the transmitter is made to change in step with the sounds at the studio microphone.

The trouble with analogue signals is that they are very susceptible to interference. Imagine how difficult it would have been to signal with beacons by varying their brightness in an *analogue* way. Even if it could have been accomplished at the transmitting end, how difficult it would have been for a watcher many miles away to read the variations, perhaps through mist or haze, even though he had no doubt that a beacon was lit.

SIMPLER WITH DIGITS

The "all-or-nothing" nature of digital signals makes the problem so much simpler.

Morse Code is only partly digital. The lengths of the digits vary (dots or dashes) and this is an analogue feature. True digital codes, with all the elements or "bits" the same length, are used in machine telegraph systems like teletype, but in fact the basic five-bit code of early teleprinters and teletypes pre-dates the electrical age by several centuries. It was invented by Shakespeare's contemporary, Francis Bacon, for use as a diplomatic code.

Bacon showed how a code message could be hidden in a plain language message. The example he gives shows how the sentence:

STAY TILL I COME TO YOU

can be made to conceal the very different one:

FLY!

The trick is to modify the letters of the plain message in some unobtrusive way; for example, to write some a tiny bit above the line and others a tiny bit below. Each letter can then have one of two positions, high or low. The intended reader then groups the letters of the plain message into lots of five and rewrites them as "highs" (H) or "lows" (L). So STAY TILL I COME TO YOU may become, say, HHLLH LHHLL LLLHH LLL.

The LLL at the end are spares, because the first three groups are all that are needed. The decoder looks up his code book and finds that HHLLH means "F", LHHLL = "L", and LLLHH = "Y". Message read, he packs his bags and leaves!

DIGITAL ELECTRONIC CODES

Bacon's code is a true binary code, with the essential "all-or-nothing" character of the individual elements. In transistor terms, we may agree to say that there is a "high" (H) when a transistor collector goes positive and a "low" (L) when it falls to zero.

These two states, which in practice correspond to, say, transistor off, and passing no current, and transistor hard on, passing so much current that all the supply voltage is dropped across a collector load resistance, can also be designated "1" and "0". So HHLLH could be written 11001. This looks like a number and can indeed be treated as one. Thus, doing subtraction, we could say that 11110–01110=10000.

We have now arrived at a strange state of affairs where 0's and 1's can signify either letters or numbers, and having turned letters into numbers we can then add or subtract them! In fact, anything that can be turned into an electrical signal can be "digitised" and the digits manipulated.

If you watch TV, then practically every day you see some of the tricks which can be performed by digitising the TV picture then manipulating the digits as numbers. The picture can be made to expand, contract, change shape, split into several identical pictures, even fold over like the page of a book or wrap itself round a cylinder. All done by digits.

PULSE CODE MODULATION

In the communications field, an important development is the now widespread use of digitised speech. Many years ago, long before the transistor, a British engineer worked out the basic principles. Last month we noted how in an a.m. radio receiver the detector in effect produces a string of samples of the original programme. So long as there are enough samples, the gaps can be filled in and the original programme waveforms recreated.

In *Pulse Code Modulation* the speech is sampled at a high rate (at least 8000 times a second). This gives a sequence of samples whose size depends on the intensity of the speech at the instant of sampling (Fig. 6.1). Instead of transmitting these as variable-amplitude analogue signals, each sample is digitised, that is turned into a string of 0's and 1's. This is transmitted (with the usual advantages of a binary system) and turned back into analogue signals at the receiver.

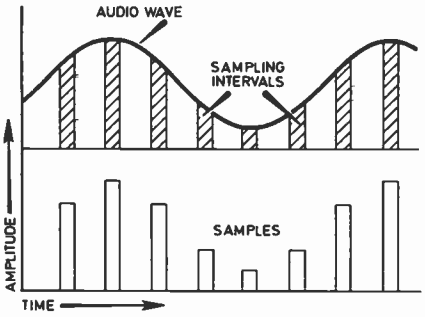

Fig. 6.1. Sampling an audio signal.

If the sampling time is short (say one microsecond), then the gap in time which comes before the next sample is due can be filled with samples of other speech waveforms. In this way a number of different conversations can be interleaved in time. At the receiving end, accurate timing circuits sort them out again.

In this way, many speech channels can be interleaved in time, transmitted over the same cable, and sorted out again. In the new telephone exchanges, all the speakers' voices will travel along the same "highway". To connect two speakers together, timing "gates" will be opened just long enough to let through the samples of their voices, then closed to exclude everybody else's.

NOT, OR, AND, NAND, NOR

The basic digital circuits are rather boring. They are either the equivalent of switches which open to let signals pass (Fig. 6.2) or "inverters" which turn 1's into 0's, and vice-versa.

A single *npn* transistor with a collector load resistance can act as an inverter. A large positive input to its base causes the collector voltage to fall from a positive value (= "1", say) to zero (= "0", say).

In computer jargon, a "1" at the input becomes a "not 1" at the output. An inverter is often called a NOT circuit.

Fig. 6.2a is an OR gate because signals are passed on if switch A *or* B *or* C is closed. Fig. 6.2c is an AND gate because no signal is passed on unless A *and* B *and* C are closed.

The common transistor equivalents such as (b) and (d) also invert, so they are NOT OR (= NOR) gates and NOT AND (= NAND) gates. In this example they are 3-input gates but other numbers of inputs can be catered for.

Gates in integrated circuits are more complicated but their function is the same. Combinations of these simple circuits are all that is needed to form the hardware of computers, capable, when programmed, of adding and subtracting binary numbers. Multiplication and division can be performed by repeated addition or subtraction.

It may be inexpressibly tedious for a human being to work out 7 × 3 as 3 + 3 + 3 + 3 + 3 + 3 + 3 = 21, but a computer never complains. Of course, there is no such thing as 3 in binary codes. But combinations of 1's and 0's can be made to stand for any number. Thus 3 becomes 11 in binary. It looks complicated, but that's merely because of unfamiliarity.

FLIP-FLOPS AND THINGS

Let's look at some slightly less boring binary circuits. In Fig. 6.3, provided the resistances are correct, TR1 is turned hard on when S1 is in position 1, and off in position 2. The l.e.d. lights or not, accordingly.

In real life binary circuits, the transistors are controlled mostly by voltages or currents from other circuits rather than by switches. The next circuit (Fig. 6.4) illustrates the point.

Here, each transistor is controlled by the collector voltage of the other. If TR1 is on, its collector voltage is low so there is no voltage to drive current through R2 to turn on TR2. This in turn means that TR2 collector voltage is high, which is just what is needed to turn on TR1.

Unless you do something about it, the circuit will stay in this state for ever. What you do is move the bit of wire which serves as S1 from its central, neutral position to position 1. This shorts out TR1 base current, turning TR1 off. Its collector voltage goes high and this turns TR2 on. The circuit has "changed state". It stays that way when S1 is returned to neutral (2). This is memory, of a sort. The circuit remembers what state it has been put into.

To reverse the state, move S1 to 3. And so on. You can also reverse the state by touching your switch wire on to the collector of whichever transistor is NOT conducting. In these ways the circuit can be made to "flip" out of one state and "flop" into the other, as often as you like.

Fig. 6.2. Theoretical diagram representing the various basic gates used in logic circuits. (a) shows an OR; (b) NOR; (c) AND, and (d) NAND gate.

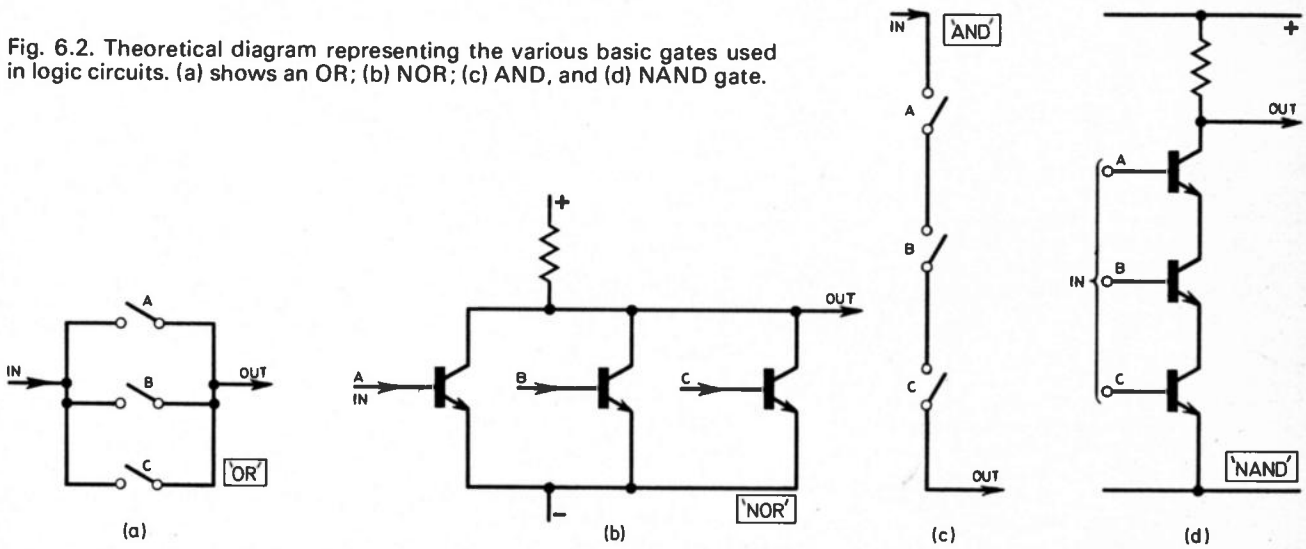

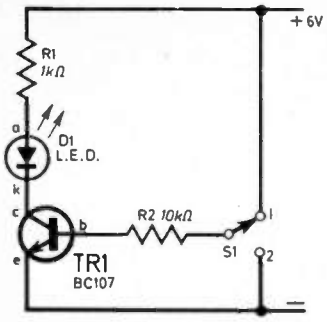

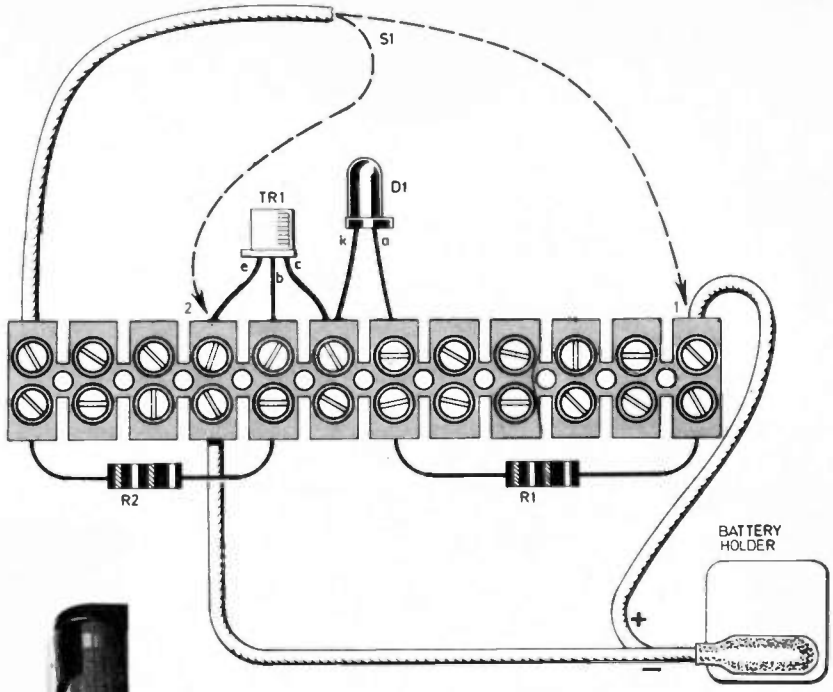

Fig. 6.3. Simple "flip-flop" circuit and demonstration model wiring (right). Photo on the right shows TR1 being switched on by the "wire" switch S1.

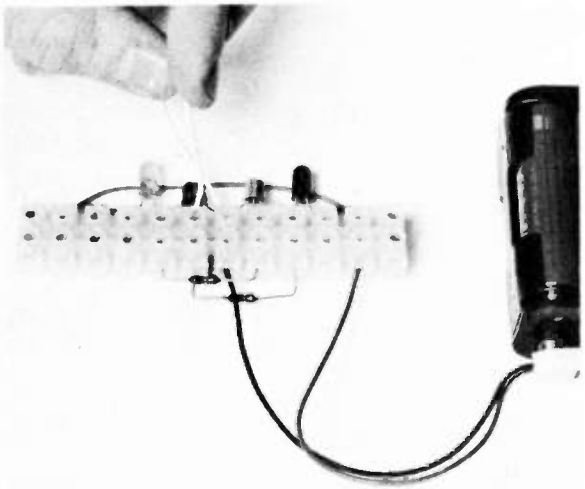

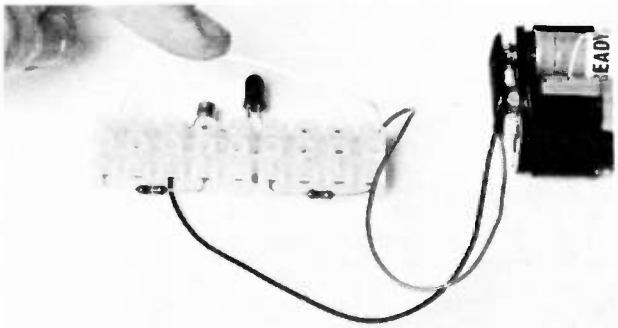

Shorting out TR1 base to switch on TR2, see Fig. 6.4.

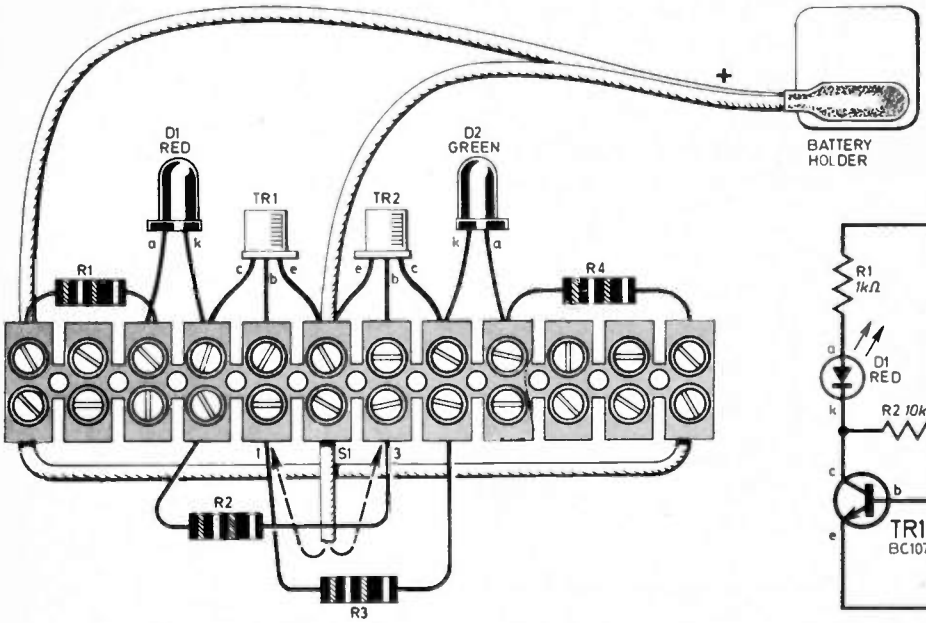

Fig. 6.4. Circuit diagram and demonstration model using another transistor to control the flip-flop circuit of Fig. 6.3.

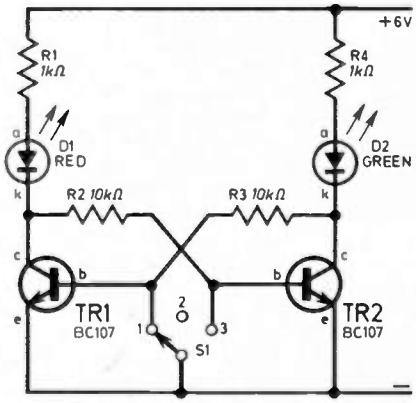

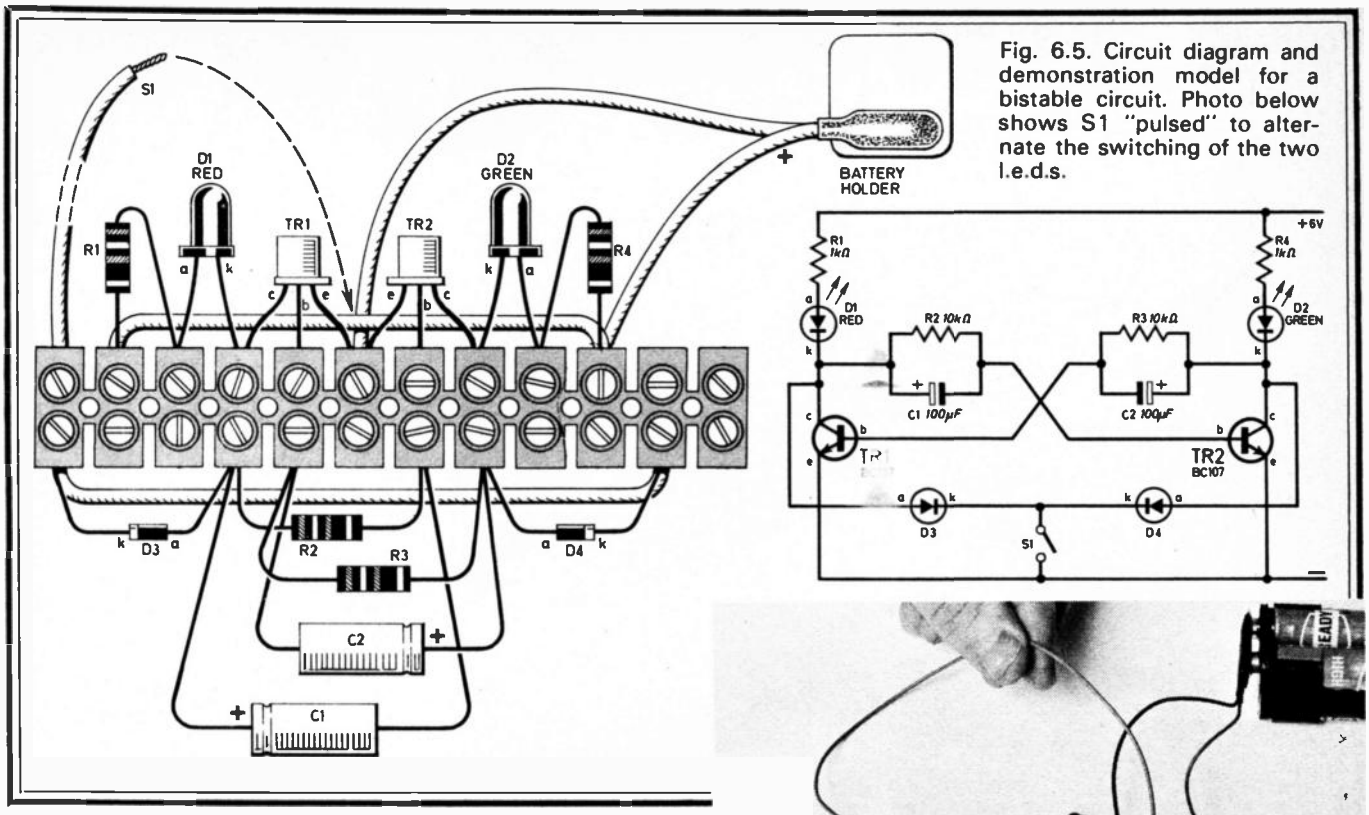

Fig. 6.5. Circuit diagram and demonstration model for a bistable circuit. Photo below shows S1 "pulsed" to alternate the switching of the two l.e.d.s.

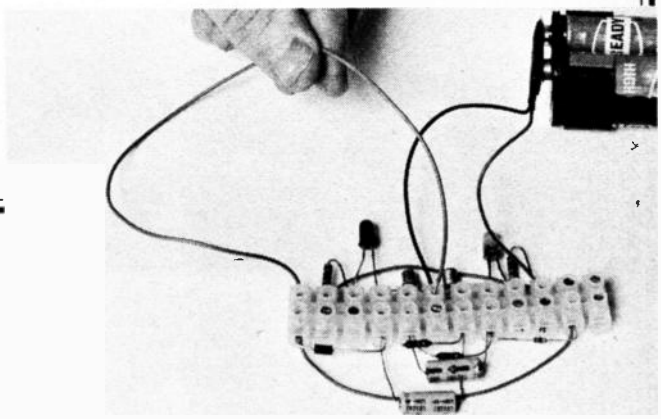

BISTABLES

Circuits like this, which can be put into either of two states and stay there are called *bi-stable* circuits, or just *bistables* for short. There is obviously something very binary about them, and they become of use for computing when modified so that they change state every time an input pulse is applied, even though it is applied simultaneously to both transistors.

You can do the trick by adding two capacitors and two diodes (Fig. 6.5). A diode allows current to pass only in the direction of its "arrowhead" triangle. With S1 open, whichever way current tries to flow it is blocked by one diode. But when S1 is closed, current can flow through both diodes, to the negative line. In effect, this connects the collectors to negative and turns off both transistors.

But with S1 open, one collector is "high". Its associated capacitor charges.

It takes time to discharge a capacitor, as you know. If S1 is given just a quick flip, some charge remains, and it is always of the correct polarity to reverse the state of the circuit. So, by repeatedly flipping S1 the state can be changed again and again. In a real-life circuit S1's job might be performed by another transistor, turned on by pulses to its base. These pulses could be derived from one of the collectors of another bistable.

Note that any *one* transistor, say TR2, changes state every alternate time S1 is closed. If output pulses are taken from TR2, there are only half as many output pulses as operations of S1. If S1 is replaced by a pulse-driven transistor, the bistable divides the number of input pulses by two. Two bistables, one driven from the other, divide by 4. Three divide by 8 . . . and so on. Chains of bistables like this form *counters*.

Such is the art of i.c. manufacture that a chain of 14 bistable or "flip-flops", each in fact containing several transistors, can be bought for about 50 pence. The i.c. also contains a circuit which resets the whole thing to zero when required. A four-stage counter, which is capable of counting up to 16, is often arranged to reset every time it reaches 10. This makes it into a *decade counter*.

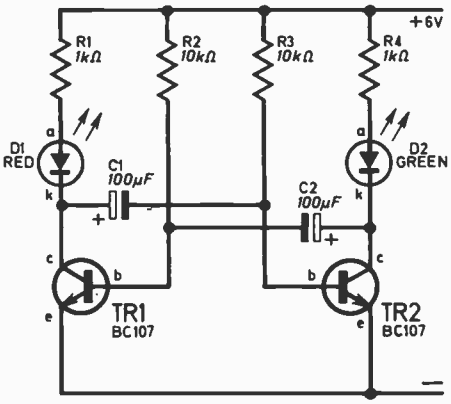

Fig. 6.6. Circuit diagram for an "astable" oscillator which can be built from components from Fig. 6.5.

Bistables can also be connected in such a way that they act as stores or registers which remember a string of digits. The string can be moved along the chain, to emerge eventually at the other end. This is a *shift register*, or moving store. Bistables can also be used as static stores or memories. Most pocket calculators nowadays have such memories. Computers have very large ones capable of storing thousands of digits.

WINKER

If you want to experiment with computer i.c.s you will be well advised to buy one of the many excellent multi-socket "breadboards" now available for the purpose. I.C.s and components can be plugged in at will and linked up with pushed-in wires. For about £8 you can get a breadboard big enough for nearly all the projects you'll want to try out.

I hope you have enjoyed this series. If so, keep reading, because there are plans for some follow-up articles using the terminal-block solderless technique.

As a final experiment you might like to convert your bistable into an *astable*, that is an oscillator (Fig. 6.6). I'll leave you to work out the changes in connections from the earlier circuit! □

Car Thermometer

BY M. PLANT

TODAY'S driver could well profit from a knowledge of the air temperature around the car, especially if used to provide a warning of possible ice formation on the road surface.

So, what kind of thermometer would be suitable for use in a car to meet this need and yet also have sufficient range to measure anticipated maximum summer temperatures?

ANALOGUE OR DIGITAL?

To keep the thermometer small and rugged, a digital circuit design using l.e.d. or l.c.d. displays is called for, since a moving coil meter for an analogue display would make a bulkier and less durable thermometer. Digital design also makes the inclusion of an alarm function easier.

However, 7-segment displays are expensive, and one solution is to use discrete l.e.d.s in a bargraph display of the type used for VU meters. Such a display of, say, ten l.e.d.s in a horizontal format functions as an analogue display but they light in discrete steps.

BARGRAPH

The 3914 i.c. is purpose-designed to drive a ten l.e.d. bargraph to give an analogue display of the voltage it senses. It is housed in an 18-pin package and the l.e.d.s are normally mounted in-line to give a bar or moving dot display. Its principal advantages compared with a con-

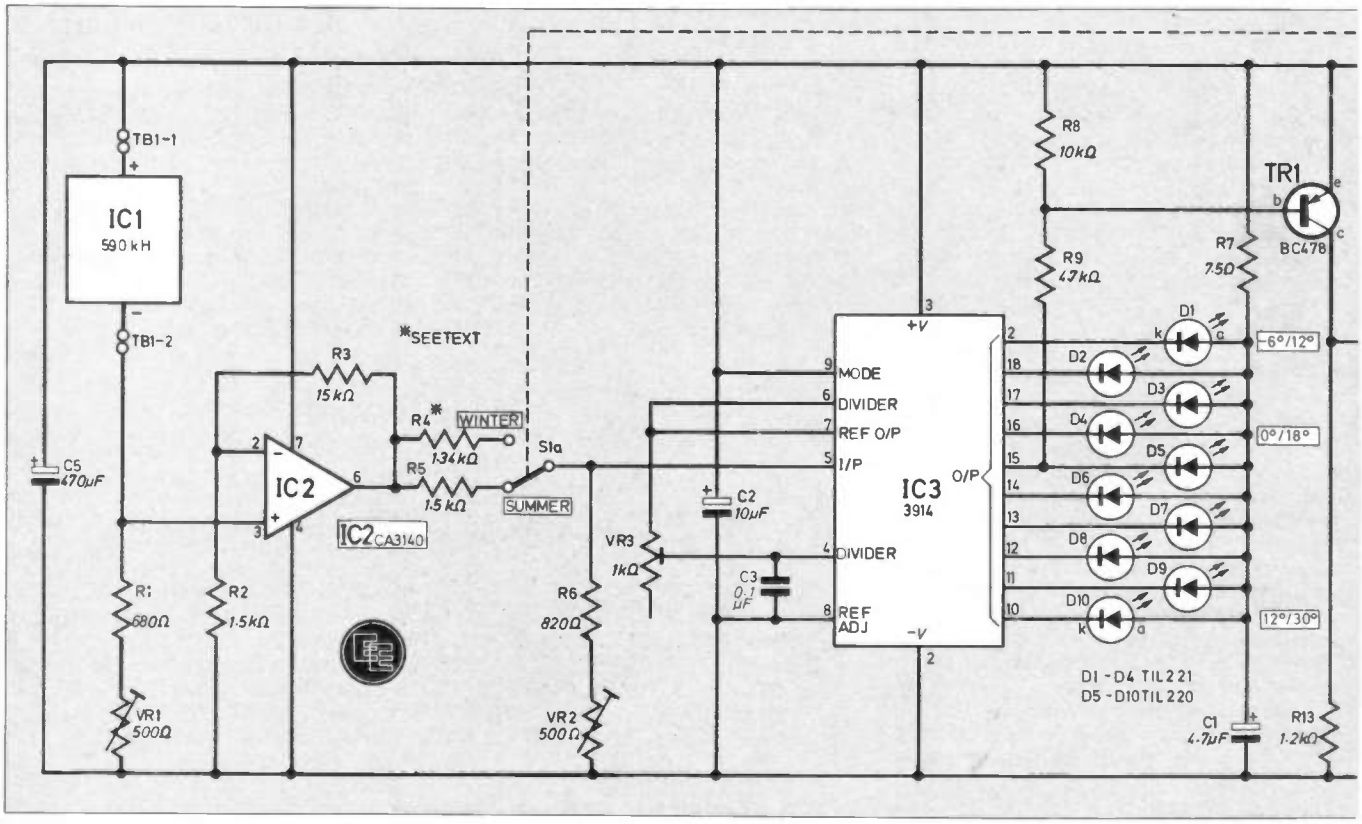

Fig. 1. Complete circuit diagram of the Car Thermometer. Note that the temperature sensor, IC1, is connected to the terminal

ventional moving coil meter are: it can be used in any position; it can be seen in the dark; it has a fast response; and it is unaffected by knocks and vibrations.

The device contains a precision voltage reference and internal logic which enables the user to choose bar or moving dot display operation. The 3914 also contains current limit resistors for the l.e.d.s.

VOLTAGE COMPARATORS

There are ten voltage comparators. The non-inverting input of each comparator is taken to a precision voltage divider chain made up of ten one kilohm resistors connected in series. All the inverting inputs of these comparators are connected together and taken to the output of the buffer stage which receives the input signal.

By using the internal voltage reference, a stabilised voltage can be set across the voltage divider chain so that an increasing step voltage is set on the non-inverting inputs of the comparators, from the lower one to the upper one. As the output voltage from the buffer stage increases in response to an analogue input voltage, the voltage on the commoned inverting inputs increases.

When the voltage on the inverting input of a comparator exceeds the voltage on its non-inverting input, its output voltage goes low and the l.e.d. connected to this output lights. Each of the ten outputs can sink a current of 30mA and this

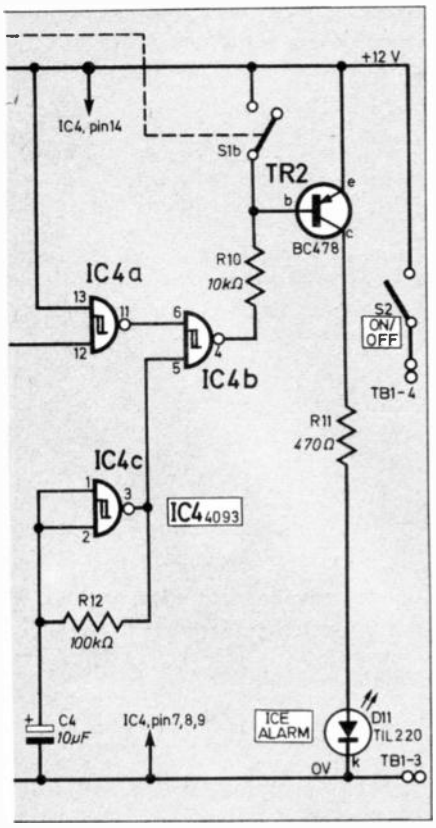

block by up to three metres of wire.

current is programmed by an external resistor.

CIRCUIT DESCRIPTION

Four i.c.s are utilised in the design of the Car Thermometer circuit shown in Fig. 1. The CMOS op-amp, IC2, is wired as a non-inverting voltage amplifier with a voltage gain of about 11, that is, the ratio of resistor values (R3 + R2) to R2.

The temperature sensor IC1, acts as a high impedance current source which passes about 1µA per Kelvin (1 Kelvin equals 1°C), through resistors R1 and VR1 when it is supplied with a voltage between 4V and 30V d.c. across it. Due to its high impedance, the sensor current is virtually insensitive to voltage drops which might occur on long cables connecting it to the amplifier.

R1 and VR1 are adjusted so that a voltage varying by about 0·91mV per Kelvin occurs at pin 3 of IC2. This variation is set so that, after amplification, the voltage at pin 6 varies by 0·1V/K. This condition makes it easy to calibrate the thermometer, since voltage at this point may be read directly as Kelvin. For example, a voltage of 2·67V occurs when the temperature of the sensor is 267K, or −6°C (273K corresponds to 0°C).

Thus, over the full range of temperature measured by the thermometer, the voltage changes from 267mV to 303mV (30°C). Note that a temperature of x degrees Celsius is equivalent to a temperature of 273 + x degrees absolute or Kelvin.

The total variation in voltage at pin 6 of IC2 is, therefore, 0·18V. A fraction of this voltage is applied to the input of IC3, pin 5, via the voltage dividers R5 (or R4) and R6 + VR2. The internal reference voltage of 3914 is available at pin 7 and is nominally equal to 1·2V. Pin 6 is connected to pin 7 so that the voltage at the "top" end of the internal voltage divider is 1·2V.

The voltage at the "bottom" end of the voltage divider is set on pin 4 by VR3 which selects a fraction of the internal reference voltage. Thus a stable voltage is set across the internal voltage divider which enables an accurate expanded scale thermometer to be designed using the 3914.

Capacitors C1, C2 and C3 are required to ensure that the 3914 is stable in operation. Resistor R7 is connected in series with the anodes of the ten l.e.d.s to reduce the power dissipation inside the 3914 by bringing its output transistors further into saturation.

ALARM CIRCUIT

The logic circuit which operates the flashing l.e.d. when the temperature of the sensor is below 2°C is centred on the CMOS device, IC4. Three of the four 2-input Schmitt NAND gates are used.

When the temperature is 2°C or above, D5 connected to pin 15 of IC3 is on and the voltage drop across it lowers the voltage at pin 15. TR1, in association with the voltage divider R8 and R9, inverts this low and places a logic high on pin 12 of IC4a. Since the voltage on pin 13 is also high, the output at pin 11 is low. This low applied to pin 6 of IC4b ensures that its output stays high and TR2 holds off the alarm D11.

If D5 goes off, the voltage at pin 15 of IC3 goes high and transistor TR1 switches off which places a logic low on pin 13, IC4. Thus, the output of this gate is now high and this high is placed on pin 6 of IC4b.

SCHMITT OSCILLATOR

Pin 5 of IC4b is connected to the output of a simple Schmitt oscillator designed around IC4c using C4 and R12. Thus pin 5 of IC4b receives square-wave pulses at a frequency of about 1Hz.

Every time pin 5 receives a low from the oscillator, pin 4 goes from low to high. Thus pin 4 of IC4b passes a series of pulses to transistor TR2 which drives D11 on and off at the oscillator frequency.

To avoid the alarm operating at temperatures below 20°C when the selector switch S1a is on SUMMER, S1b holds the base of TR2 high hence preventing D11 from flashing.

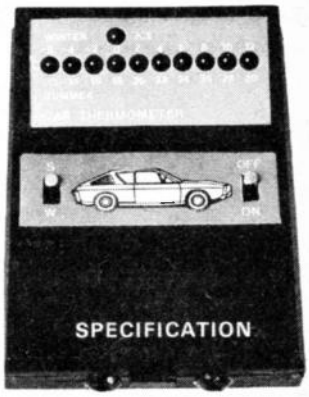

Range:	Summer 12°C to 30°C Winter − 6°C to 12°C
Display:	10 l.e.d.s in bar format plus alarm l.e.d.
Resolution:	2°C per l.e.d.
Alarm:	Ice warning operates flashing l.e.d. at temperatures below 2°C.
Sensor:	Semiconductor temperature sensor with nominal temperature coefficient of 1µA/°C
Power supply:	Suitable for in-car use since Thermometer operates over a 7V to 16V range without affecting calibration
Max. current:	150mA at 12V supply voltage with all l.e.d.s on

Car Thermometer

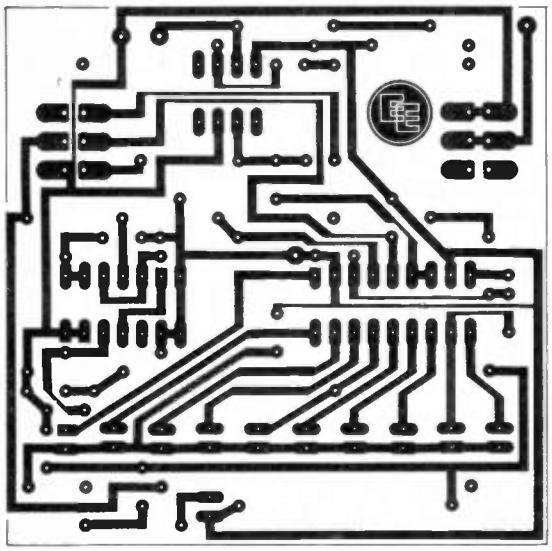

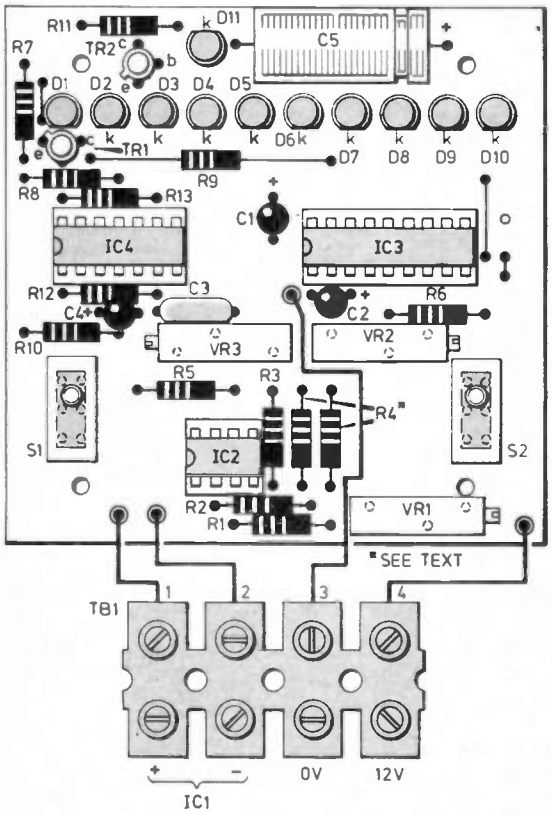

Fig. 2. Full size p.c.b. artwork and component layout. All the l.e.d.s are soldered into the board at the same height of approximately 20mm (to the top of the lens).

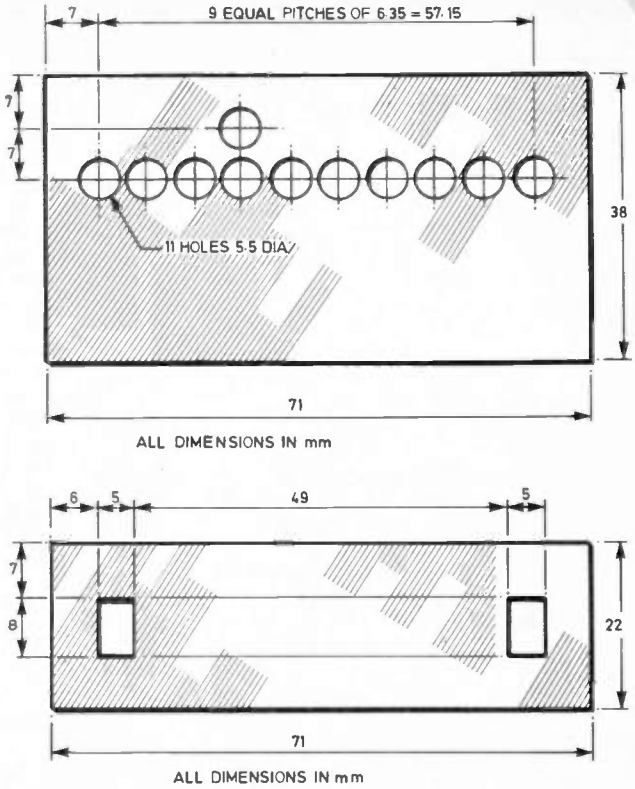

Fig. 3. Drilling details for the display panel and switch label. Both are specifically designed for the Lascar hand-held case.

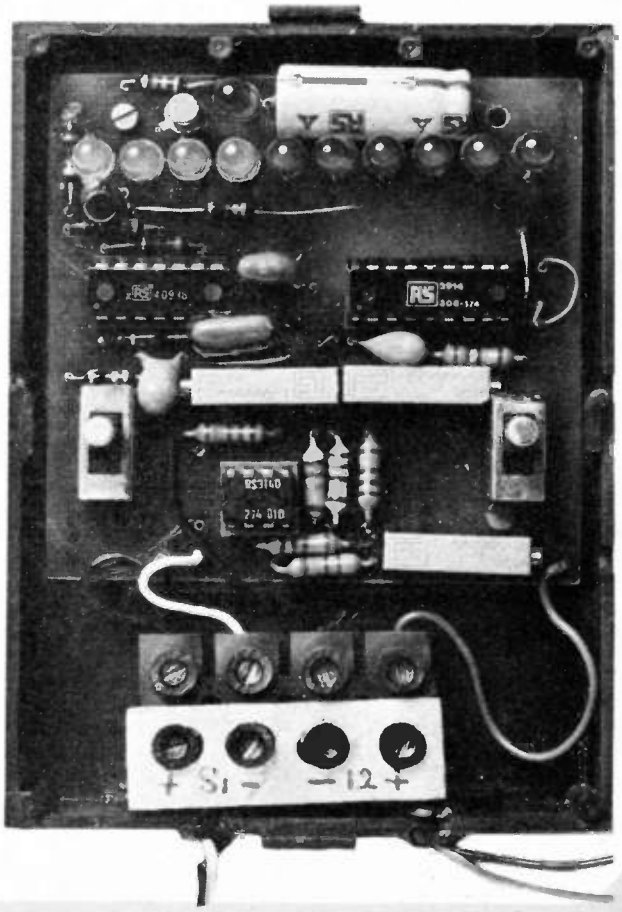

CONSTRUCTION starts here

CIRCUIT BOARD

The p.c.b. layout shown in Fig. 2 makes circuit assembly of the thermometer straightforward. This board is designed to fit inside the lower half of the hand-held case. The l.e.d.s are soldered direct to the p.c.b., the height being chosen so that they just pass through holes drilled into the display plate when the unit is assembled.

The ice warning l.e.d. is mounted by the side of the 0°C l.e.d. The first four l.e.d.s which indicate below freezing on the WINTER scale are green and the rest red.

All the components except the temperature sensor are mounted on the p.c.b. There are a few problems which might arise in using the 3914 and these were anticipated in the component layout. One problem is that the l.e.d. currents sum at the 0V terminal (pin 2) of this i.c. and any resistance between pin 2 and the battery terminal will cause voltage drops which can make the 3914 oscillate.

Oscillation in the 3914 is usually manifested by a slow turning on and off of the display. Thus the battery negative lead is taken direct to pin 2 and C4 decouples the power supply close to the 3914. Similarly, C1 between the l.e.d. anode common and pin 2 has a decoupling role and reduces the possibility of oscillation due to any resistance between pin 3 and anode common.

Resistor R4 has a calculated value of 1·34 kilohms, and is made up from two resistors connected in series, nominal values of 510 ohms and 820 ohms. The precise value of this resistor is determined by the value of the internal reference voltage of the 3914 and corresponds to the internal reference voltage of 1·26V. The resistors were selected using a digital ohmmeter.

Constructors are advised to select a value close to 1·34 kilohms assuming their 3914 has the same internal reference voltage. Should, in subsequent use after calibration, the scale be inaccurate, a change to one of the two resistors making up R4 can be made.

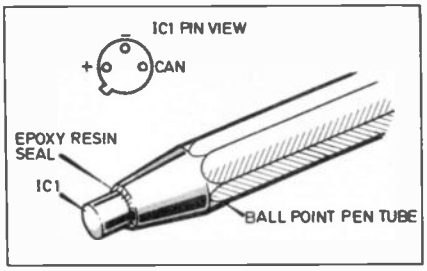

Fig. 4. Method of mounting the temperature sensor, IC1, in a plastic ball point pen tube.

The four external connections to the unit (to power supply and sensor) are made via a four-way terminal block, TB1. It is important to check that correct polarities are observed to the sensor. A pair of leads two or three metres long, if necessary, can be used to connect the sensor to the terminal block and care should be taken to ensure that the soldered joints close to the sensor are insulated from each other, and from any exposure to external water.

The sensor should be glued with epoxy resin into the end of a plastic ball point pen tube for protection as shown in Fig 4. Note that pin 3 (case) of IC1 is not used and should be cut off close to the case.

CALIBRATION

This exercise necessitates the adjustment of VR1, VR2 and VR3 with a possible change to the value of R4 or R5. However, the procedure is quite straightforward and you only need some glasses of water at 12°C and 30°C, measured using an accurate thermometer, and some melting ice in another glass.

Connect the unit to a 9V, PP7 battery or to a 12V d.c. power supply and put the sensor in the water at 12°C, using the thermometer to keep the water well stirred. Switch on the unit and select the SUMMER range. Use a digital voltmeter (if available) to measure the voltage at pin 6 of IC2 and adjust VR1 until a reading of 285mV is obtained. This reading corresponds to an absolute temperature of 285K (12°C). Move the sensor to water at 30°C and you should find that the voltmeter now reads 303mV. VR1 should not now be touched again.

Note that the sensor, amplifier and digital voltmeter constitute a digital thermometer whose scale is linear and reads in degrees absolute (Kelvin).

Adjust VR2 until all the l.e.d.s are on making sure that D10 just comes on. Put the sensor in water at 12°C again, and adjust VR3 so that D1 just comes on. Move the sensor back to water at 30°C and once again check that D10 is just on. No further adjustment to VR2 and VR3 should be necessary. They have set the scale of the thermometer to a 18°C span.

Switch S1 to WINTER and put the sensor in melting ice at 0°C. The first four (green) l.e.d.s should be on, and the ice alarm D11 should begin to flash on and off. Remove the sensor from the melting ice and allow it to warm up. As it does so D5 will light and the alarm will go off.

Place the sensor in the water at 12°C and the last l.e.d. in the scale will just come on. If it does not, a change to one of the resistors R4 or R5 is necessary. Select another resistor to correct the error using the fact that reducing the value of R4 (or R5) causes the scale to over-read and increasing the value causes the scale to under-read.

COMPONENTS

Resistors

R1	680Ω ±2%
R2,5	1·5kΩ ±2% (2 off)
R3	15kΩ ±2%
R4	1·34kΩ (see text)
R6	820Ω ±2%
R7	7·5Ω
R8,10	10kΩ (2 off)
R9	4·7kΩ
R11	470Ω
R12	100kΩ
R13	1·2kΩ

All ±2% resistors are metal oxide, all other types are ±5% carbon

See Shop Talk page 145

Capacitors

C1	4·7µF 25V tantalum bead
C2,4	10µF 25V tantalum bead (2 off)
C3	0·1µF polyester
C5	470µF 25V elect.

Semiconductors

D1-4	TIL221 0·2in. green l.e.d. (4 off)
D5-11	TIL220 0·2in. red l.e.d. (7 off)
TR1,2	BC478 silicon *npn* (2 off)
IC1	590kH temperature sensor TO-5 package
IC2	CA3140 CMOS op-amp
IC3	3914 linear bargraph display driver
IC4	4093 CMOS quad 2-input NAND Schmitt trigger

Miscellaneous

S1,2	d.p.d.t. sub-miniature slide switch with chrome tang (2 off)
VR1,2	500Ω multiturn preset (2 off)
VR3	1kΩ multiturn preset
TB1	4-way terminal block

Hand-held instrument case; single sided p.c.b. 70 x 70mm; 18-pin d.i.l. holder; 14-pin d.i.l. holder; 8-pin d.i.l. holder; 7/0·2mm wire; used ball point pen tube; epoxy resin adhesive.

Approx. cost Guidance only £16

INSTALLATION

The thermometer is now ready to use in the car. Connect the unit to the car battery via the ignition switch, carefully observing to polarity, and mount the unit in a position not illuminated by direct sunlight otherwise the scale will be difficult to read.

The sensor should be located away from engine or exhaust heat but able to sense the ambient air temperature without being directly exposed to the airstream; or to rain and road spray. A good position for the sensor is behind the front bumper guard but fit the sensor inside a short length of tube open at one end and mounted with its open end pointing earthwards. □

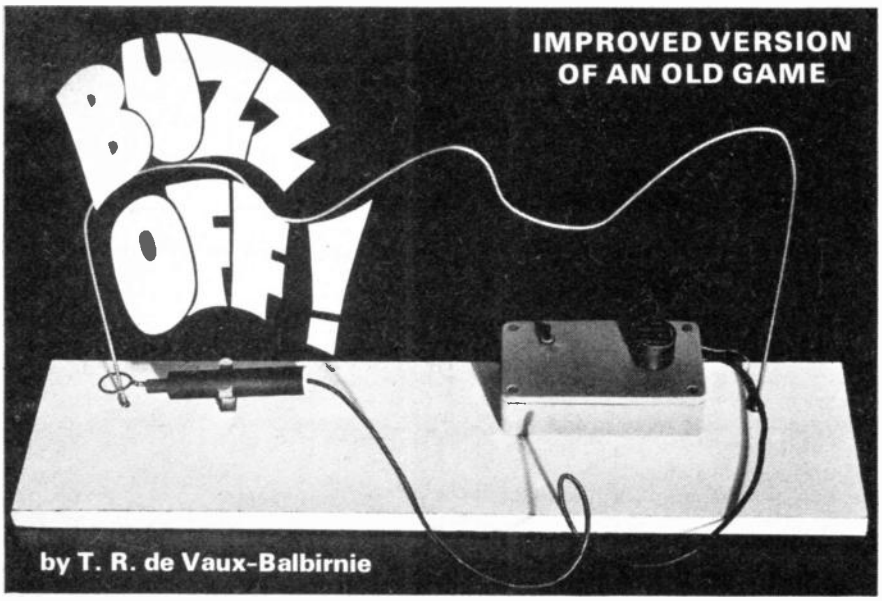

At village fêtes up and down the country you will see this time-honoured game. No-one seems to know what it is really called but the idea is simple enough. If you can guide the hand-held loop around a bent wire obstacle course without touching it, you win. If you touch the wire with the loop a bell rings and you lose!

ORIGINAL SYSTEM

The circuit normally used is extremely simple—just a battery and bell connected in series, Fig. 1. The bent wire and hand-held loop form a "switch" so that the circuit is completed when the two touch.

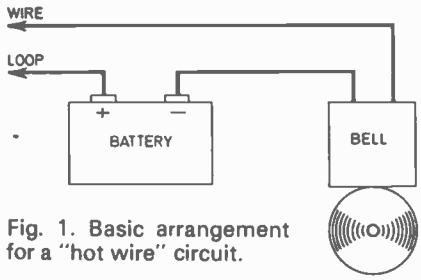

Fig. 1. Basic arrangement for a "hot wire" circuit.

Although satisfactory, this system suffers from two defects. Firstly, if the player touches the wire *momentarily* then the bell might fail to ring due to its rather slow response time. Secondly, since the current required to operate the bell flows through the wire and loop, poor contact between the two will prevent the circuit from working. It is therefore necessary to keep the wire and loop very clean to avoid erratic operation.

RAPID RESPONSE

The author examined the basic circuit and improved it while still preserving the traditional form of the game.

The first improvement was to ensure that the device would sound for a definite time even after *momentary* contact between wire and loop. This avoids disputes as to whether the player actually touched the wire or not. The second improvement makes sure that the circuit works reliably even where very poor contact exists.

In the prototype, the bell was replaced by an audible warning device. This consumes less current than a bell, is cheaper, more reliable and gives a louder sound. Experiments with the prototype were unsuccessful when an ordinary bell or buzzer was used.

CIRCUIT DESCRIPTION

The circuit diagram for the Buzz Off! is shown in Fig. 2.

The main part of the circuit consists of the ever popular 555 timer i.c. This is connected as a monostable—that means it remains off until triggered whereupon it switches on for a predetermined time then reverts to its original state. The *trigger* referred to is provided by contact between the wire and hand-held loop.

The time during which the circuit is on depends on the values of R1 and C1. Using the component values suggested this time will be about half a second and this was thought appropriate. For a longer time, R1 could be increased and for a shorter time reduced.

The output of the i.c. is obtained at pin 3 and is connected to the base of TR1 which does the actual job of operating the audible warning device. VR1 matches the output from the i.c. to the transistor.

For the prototype, three type 1289 4·5V batteries were connected in series, Fig. 3, and these gave excellent results. The suggested audio-warning device does not perform well on less than a 12-volt supply although a 9V battery will do for testing. The current requirement is about 10mA on standby and 100mA whilst actually sounding.

COMPONENTS

See Shop Talk page 145

Resistors

R1	5·6MΩ
R2	47kΩ
R3	220Ω

All ½W carbon ±5%

Capacitors

C1	0·01μF polyester
C2	0·1μF polyester

Semiconductors

TR1	BFY51 *npn* silicon
IC1	NE555 timer

Miscellaneous

VR1	1kΩ miniature horizontal preset
S1	s.p.s.t. miniature toggle
WD1	12V buzzer (see text)
B1	13½V (see text)

0·1 inch matrix stripboard 9 strips by 22 holes; plastics case 115 × 95 × 37mm (ABS box MB3); 8-pin d.i.l. i.c. socket; chipboard: 460 × 110 × 15mm; 100mm tinned copper wire 16 s.w.g.; 800mm flexible wire; connecting wire; wire coat hanger.

Approx. cost Guidance only £7

Fig. 2. Complete circuit diagram for the Buzz Off!

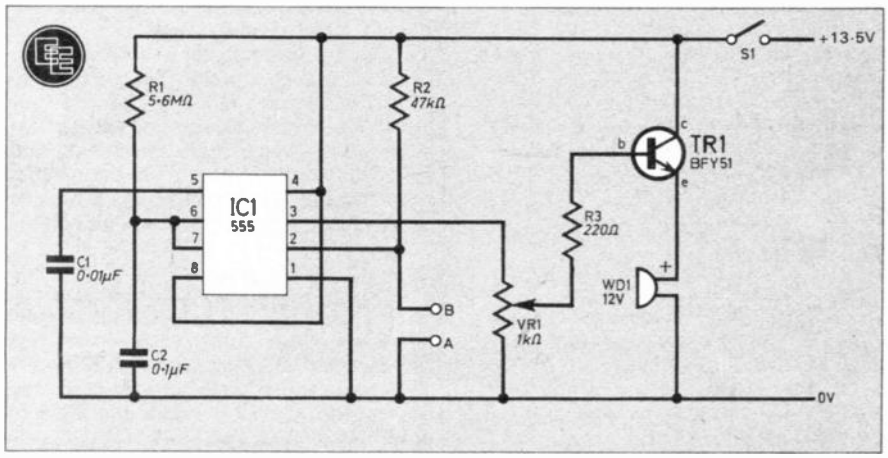

CONSTRUCTION starts here

CIRCUIT BOARD

The circuit is built on a small piece of 0·1 inch matrix stripboard 9 strips by 22 holes in size. Use an 8-pin i.c. socket and do not insert the i.c. until all assembly work is completed. Cut the copper tracks in the places indicated on the underside diagram, Fig. 4, especially not forgetting the row between the pins of the i.c. socket.

Although any small plastics box may be used to house the project, the suggested one has convenient slots for easy mounting of the circuit panel.

POWER SUPPLY

The audio-warning device may be placed inside the box with only the top part protruding through a hole cut in the lid. If this is made a tight fit then no further support will be needed. Holes need to be drilled in the case for S1, external battery leads, and for connections to the loop and wire. If the box is large enough, the batteries may be placed inside, but a better plan is to use external batteries especially where heavy use is anticipated.

WARNING DEVICE

The alternative audible warning device will operate from a 9-volt supply. It may be mounted on top of the case using small nuts and bolts. Although much smaller it is also quieter in operation so, for loudest results, the recommended audio-warning device should be used. Whichever device is chosen, it is essential to observe the polarity. The recommended audio-warning device has spade type connectors marked "+" and "–". The alternative has flying leads—red for positive and black for negative. Soldered connections may be made to spade connectors so long as they are made quickly. On the other hand, the proper connectors are cheap and may be obtained from a motor accessory shop.

The switch S1 is mounted in the hole in the lid and wired into the positive battery lead. Some connections need to be made to the copper strip side of the circuit panel. These should be made with great care to avoid short circuits.

LOOP HANDLE

The hand-held loop consists of a piece of thick (16 s.w.g.) copper wire bent around a wooded dowel and twisted tightly around it using pliers or a vice. The diameter of the loop is left to the constructor since it is this which determines the difficulty of the game.

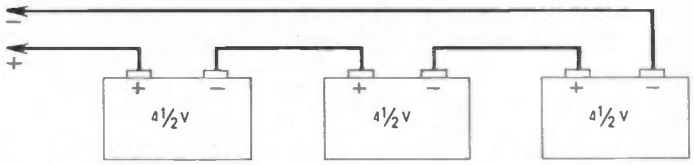

Fig. 3. Connecting three batteries in series to power the Buzz Off! circuit.

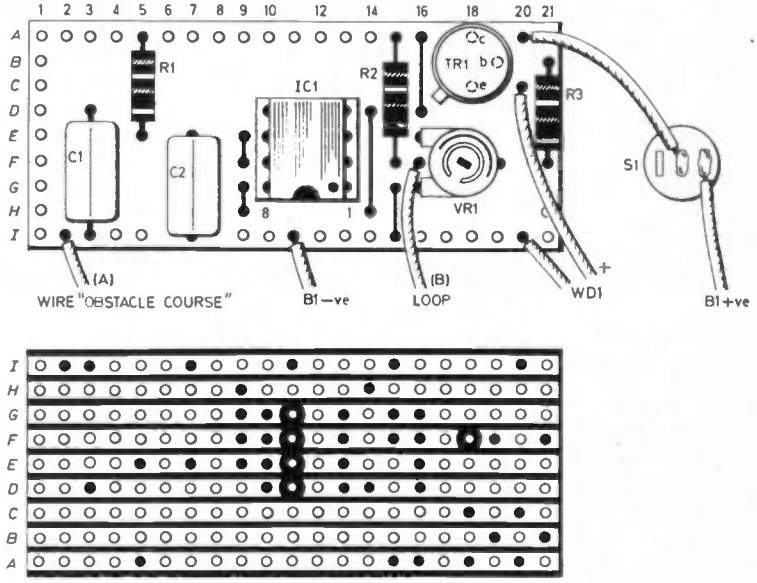

Fig. 4 (Above). Component layout, interwiring details and underside of the stripboard showing breaks (5 off) in the copper strips. Note that there should be 22 holes not 21 as shown.

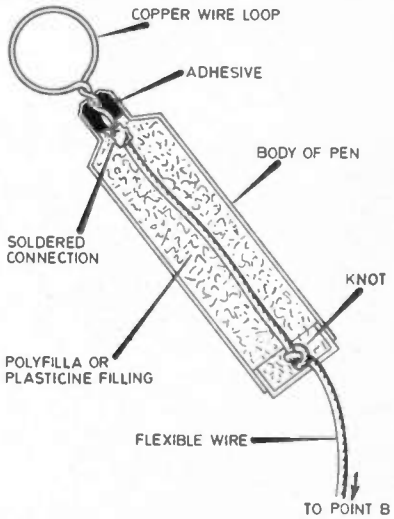

Fig. 5 (Right). Suggested method of construction for the hand-held loop.

Completed prototype of the Buzz Off! The siren protrudes through a cut-out in the case lid. The circuit board slides into slots in the side of the case.

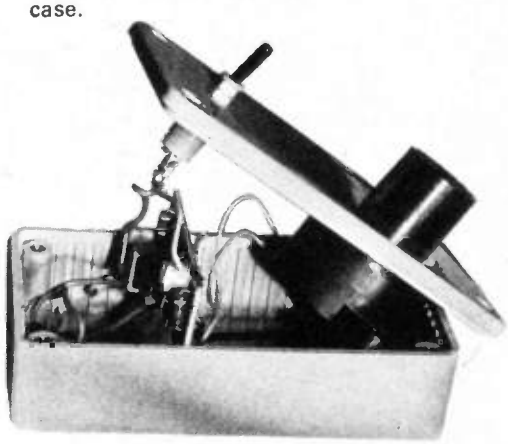

BUZZ OFF!

The handle consists of an old felt tip pen. After dismantling this and washing it out, the copper loop has a length of flexible wire soldered to it and adhesive used to secure the parts together, see Fig. 5. The wire is knotted and passed through a hole drilled in the base of the pen body. This knot will protect the soldered connection from the rough service which the loop is likely to receive.

The best wire to use is the "extra flexible" variety. This resists bending very well. If it is not available, ordinary stranded wire will give reasonable service. When the project has been finally tested, the body of the pen may be filled with Plasticine to give a pleasant feel to the handle. The free end of the wire is taken to point B on the circuit panel and soldered into position.

COAT HANGER

The wire *obstacle course* is made from an old wire coat hanger mounted on a chipboard base. The baseboard used for the prototype was made from 15mm thick chipboard about 460mm long by 110mm wide. After untwisting the coat hanger and bending the wire into a suitable shape, the hand-held loop is threaded onto it.

The ends of the wire are then secured through holes in the baseboard. If BA taps and dies are available, the ends of the wire may be threaded and secured using two nuts and washers at each end. A solder tag may be used at one end to make the connection to point A. The wire may also be secured in the holes by using epoxy resin adhesive. A soldered or tightly twisted connection may then be used for connection to point A.

If sharp ends of wire protrude through the baseboard, rubber feet may be used to keep it clear of the table. Finally, a spring clip on the baseboard may be used to keep the hand-held loop tidy while the game is not being used.

CIRCUIT TEST

Testing may be carried out using a 9V battery. Set VR1 to approximately mid-travel, keep the loop clear of the wire and switch on. The audio-warning device may give a single "bleep" which may be ignored. Now touch the loop against the wire for an instant. There should be a short bleep. Some adjustment to VR1 may be needed for best results. If the circuit tends to trigger falsely—to bleep even when the loop and wire have not touched—then R2 may need to be altered in value.

If the length of the bleep is too short, R1 may be increased in value and vice-versa.

This game is certainly good for fund-raising. You are sure to be in demand when word gets around! □

HOW TO USE YOUR WIRE BENDING GAUGE

The Wire Bending Gauge given free with this issue is intended to be used for bending the leads on small components such as resistors and axial lead capacitors. It provides a quick, accurate and safe means of bending the leads to span an exact number of holes on perforated circuit boards. There are guides for both horizontal and vertically mounted components on 0·1 and 0·15 inch pitch boards. The numbers represent the number of holes to be spanned, including mounting holes.

Horizontal mounting. **(1)** Place the component in the notches to span the requisite number of holes for the appropriate pitch. Hold component body and bend one lead at a time to make the leads parallel; **(2)** ready for insertion. ***Vertical mounting.*** **(3)** Place component in slot and bend protruding lead through 90 degrees. Slide component along slot to required span guide lines and bend once again through 90 degrees over gauge edge as shown in **(4)**. Move component to tip of gauge to remove.

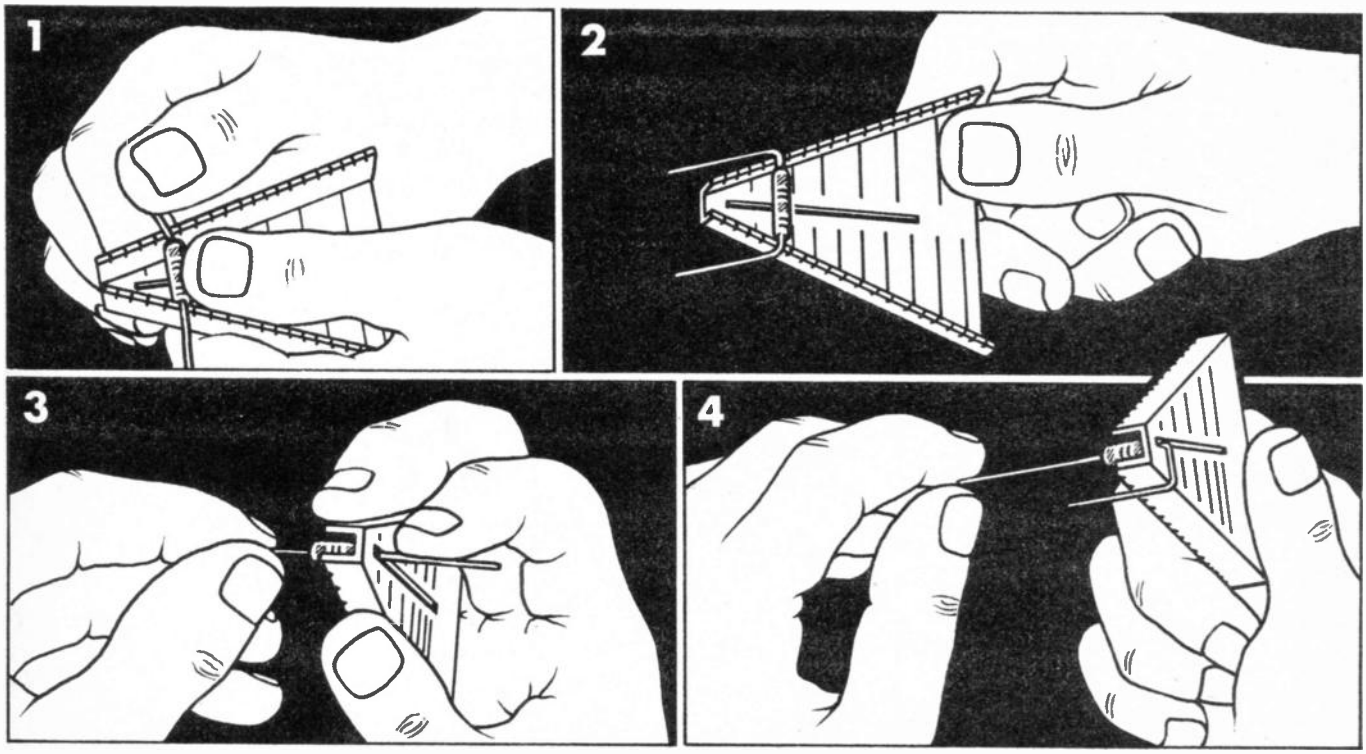

Everyday ELECTRONICS

APRIL 1983 ISSUE ON SALE FRIDAY, MARCH 18

APRIL ISSUE

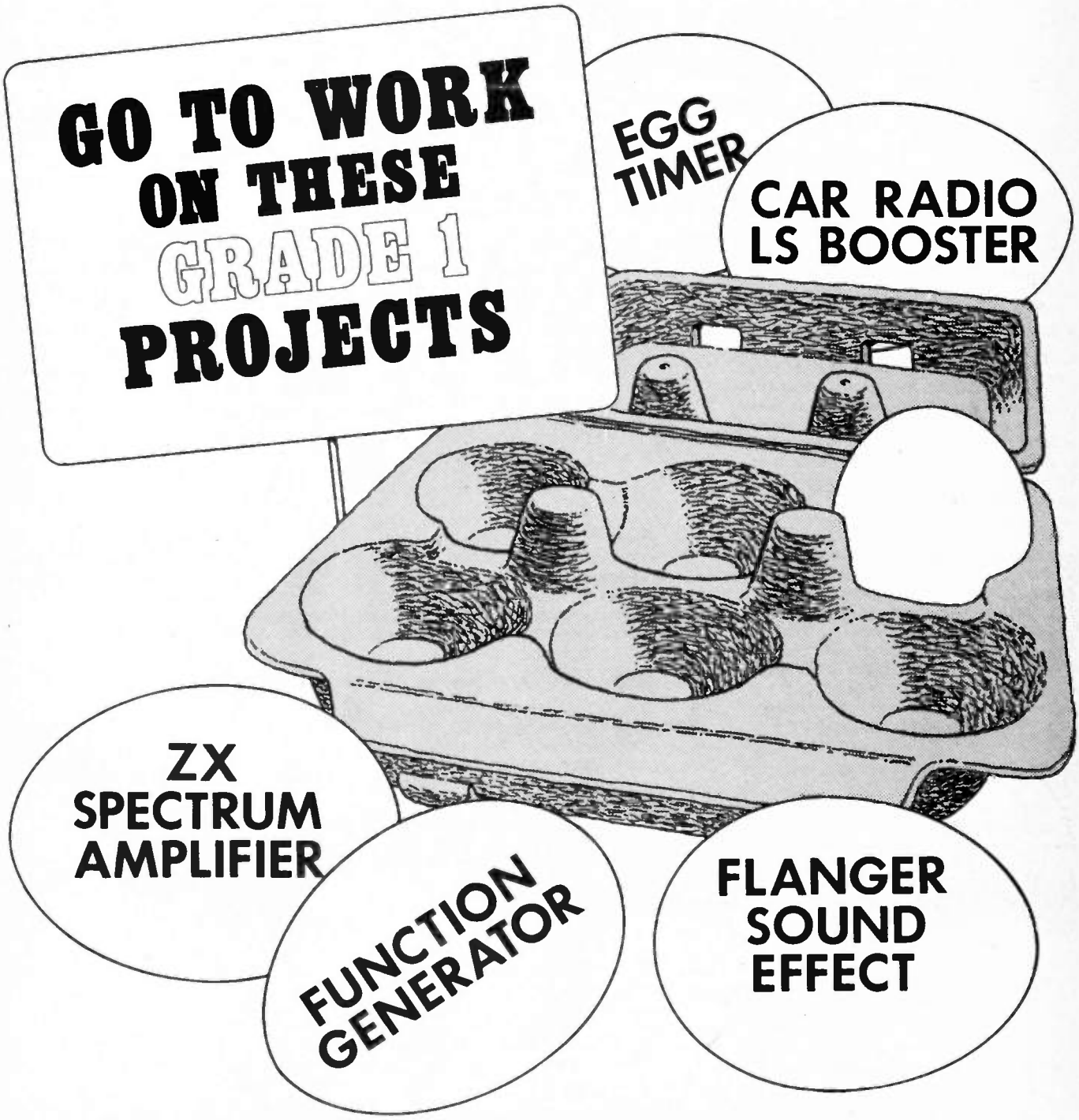

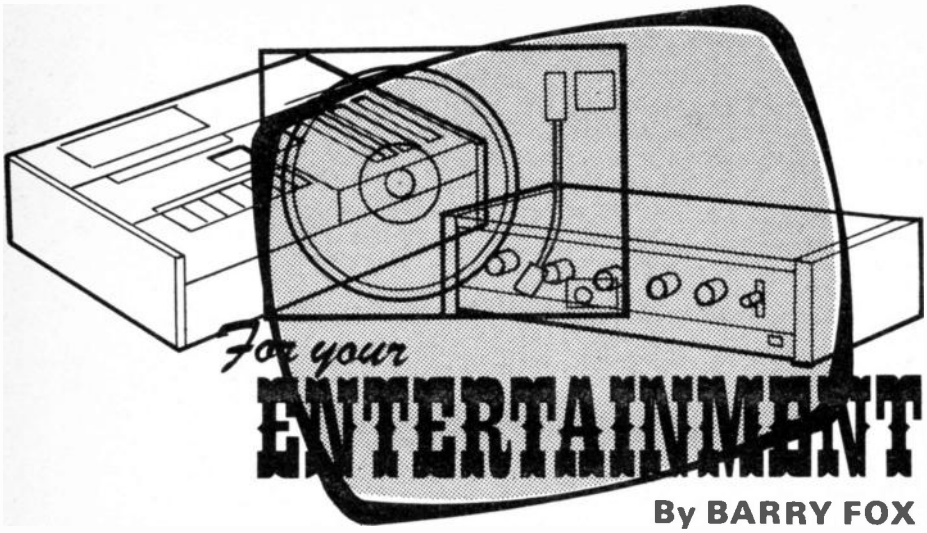

By BARRY FOX

Why Markets Are Lost

Over the last 15 years I've watched the British consumer electronics industry be decimated by Far Eastern competition. But I'm sorry to say that many firms, now out of business, have reaped no more than they deserved. They didn't plan ahead, they didn't keep in touch with what their customers wanted and they didn't keep up to date with technology, production efficiency and quality control. So they went out of business when better, cheaper and more reliable products from Japan started to flood in. Now exactly the same thing is beginning to happen to the motor industry.

Recently, partly out of national loyalty, I bought British when I needed a new car. I chose an MG Metro because I admired some of its elegant design features. Like, for instance, the way the driver's switch panel has a blanked off socket into which the owner can push-fit Leyland switches to add optional extras, such as front fog lamps. As the switch pushes home it mates with contacts on the edge of a printed circuit board which is connected to the main wiring loom. As the Leyland circuit diagram for the car shows, it is then only necessary to connect a relay and fog lights at the free end of the wire, near the front radiator.

The Missing Wire

Thinking to myself, at last we're learning from the Japanese, I bought and fitted the necessary switch, relay and fog lights. But then I found that, although the switch mated with the p.c.b., the fog lamp wire shown on the circuit diagram wasn't anywhere to be seen. The dealer who had sold me the car was puzzled and suggested I contact the service division of British Leyland. Two months later I had still not solved the problem but I'd learned an awful lot about the problems Leyland must face in the future. What I found out could also, incidentally, be very useful for anyone else who has recently bought a Metro car, and for dealers who are selling them.

The Supercover guarantee department of British Leyland referred my query to the BL Customer Service Department. Unfortunately they couldn't read a circuit diagram, and told me that the wire was missing because it was shown in the circuit diagram only as a dotted line, meaning that it was optional. In fact, it's clearly shown in Leyland's own circuit as a hard wire. I persisted and my query was then passed to another customer relations person at British Leyland. He ducked the issue altogether. "Your best course of action will be to consult your local dealer". So I wrote back again explaining that it was only because the dealer was puzzled that I had written to British Leyland for advice in the first place.

Do It Yourself

I heard nothing, so phoned British Leyland Customer Relations to try and sort things out once and for all. At first they tried to tell me that the wire was there but I couldn't see it. Then they finally owned up. The wire which makes it easy for Metro owners to fit their own fog lights has been omitted from the wiring loom to save money. Dealers hadn't been told and the circuit diagram hadn't been changed. "It is necessary to supply and fit the necessary wiring yourself," wrote Leyland, enclosing a scrappy Xeroxed sheet showing where the missing wire should be fitted to the p.c.b.

My mind boggling, I asked the British Leyland Press Office how much money the company was saving by omitting one metre of low current wire at the production stage, and leaving the customer to rebuild it into the car after purchase. The press officer came back to me (or more accurately waited until I got impatient and phoned her), to tell me that she had been assured by BL's electrical engineers and product planners that the wire wasn't missing after all!

After yet more phone calls and letters I finally got something approaching the full story. The wire in question was in all the original Metro range, but is now being omitted. With curious logic it's been omitted first from the most expensive cars, the MG Metro and the Van den Plas. No-one could say for sure who had made the decision.

Incomprehensible

So, if you want to fit fog lamps to a new Metro car by using the standard switches that interface with the p.c.b., then don't doubt your sanity if you can't find the wire that is shown on the circuit diagram.

Meanwhile, British Leyland is getting £990 million of public money over two years. That's nearly £10 million a week. This money is intended to help the company fight off Japanese competition. When I was in Japan recently, at a trade seminar, I told the story of the missing Metro wire. The Japanese press and businessmen present looked at me as if I was mad. The idea of treating a customer that way is totally alien to Japanese industry. And that's why they are winning the trade war.

Buying A Home Computer

The national press carried a report of boom sales in home computers in the last Christmas shopping rush. This is doubtless because home computers are now cheaper than a computer controlled home TV game.

Despite all the fancy talk about home computers making domestic life and business more efficient, there's no doubt that most people who buy them end up using them mainly to play games. A friend in America recently told me that although many businessmen now feel obliged to buy and install a computer system in their office, to look "on the ball", most of them only use their impressive installations to play exotic TV games.

I also heard recently of problems some users are having with their home computer disc drives. It's easy to forget that although the microprocessor inside a computer is a wonder of modern technology, and can in theory last forever, the same is certainly not true of disc drives.

These are complicated mechanical beasts, that will eventually go wrong or wear out. In some cases they may only last a few months, and if the drive is built into the main computer housing, then you'll have to return the whole system for repair. The cost of the strip down and replacement of a drive can be well over £100.

Don't rely on the guarantee to help you. Often you'll find it offers only three month's free parts and labour. You may be able to contest this under the British consumer laws, but you could well end up with a fight on your hands.

So, before buying a computer ask yourself three questions. Do I really want one; how easy will it be to repair or replace a disc drive; and am I getting a good guarantee.

TEST GEAR 83 DUAL POWER SUPPLY

UNIT ONE

BY J. R. W. BARNES

THE TEST GEAR 83 SERIES CONSISTS OF:
DUAL POWER SUPPLY ● FUNCTION GENERATOR ● TRANSISTOR TESTER
PULSE GENERATOR ● LABORATORY AMPLIFIER ● FREQUENCY METER

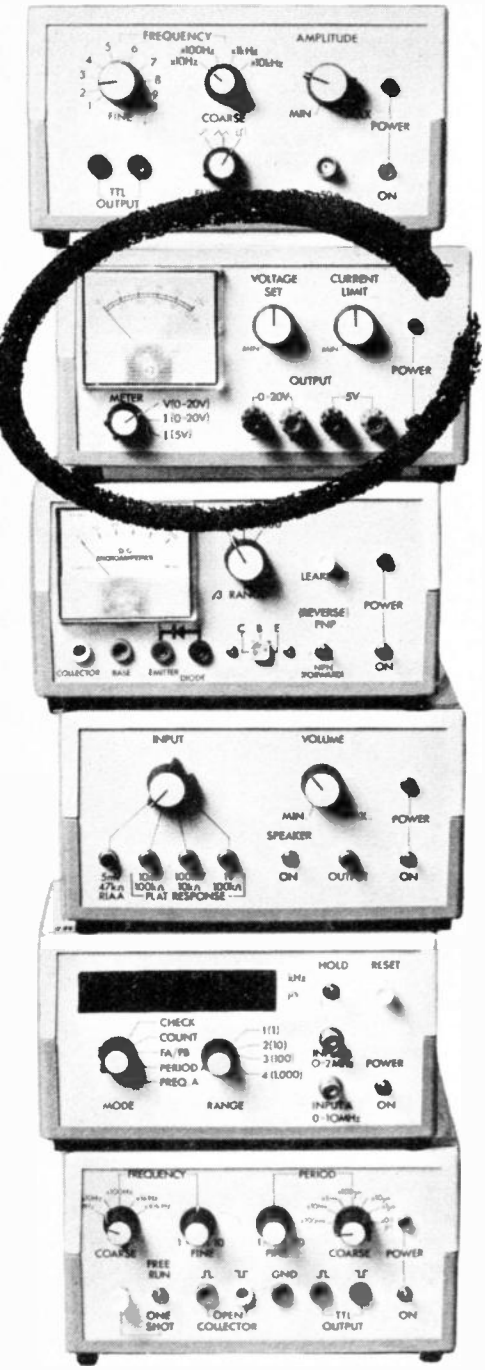

IN 1974 EVERYDAY ELECTRONICS published a series of articles, *E.E. Test Gear Five* specially designed for the constructor.

Since 1974 there have been many major advances in the world of electronics and we now introduce a new series of six instruments, under the title *Test Gear 83*.

TEST GEAR 83

This new generation of test equipment reflects the upward trend in technology. Of the original five, two have been kept, the Power Supply and the Transistor Tester, both being new and considerably updated designs. The A.F. Oscillator has been abandoned in favour of a Function Generator, and the R.F. Generator has gone completely. In addition, there is a Laboratory Amplifier, a Pulse Generator and Digital Frequency Meter.

The reasons for building your own test equipment, however, remain the same. Electronics is a craft, and with widely available integrated circuits, sometimes likened to building blocks, most of the old terrors of electronics have disappeared. The average man (or woman) in the street can be as happily engaged in building and experimenting, as the technically trained expert. It is the nature of electronics that allows useful and satisfying involvement at all levels.

Throughout the design of the Test Gear 83 projects, emphasis has been placed on two main areas; firstly, the price/performance ratio while at the same time designing units that will provide a sufficiently high specification, so they will be of use for many years. The other area of concern is on ease of construction.

All the units will be built on printed circuit boards, whilst this adds to the construction time it has been the authors experience that constructional errors are less likely to occur, and the project works first time.

DUAL POWER SUPPLY

A power supply is a key component in any electronic system. Although batteries may be used to supply the finished project they are not flexible enough for development work. Also, with batteries becoming increasingly more expensive the idea of running projects from the mains becomes attractive. This unit has been designed to supply the essential requirements of a home constructor's workshop at a reasonable cost. It provides two stable, well regulated outputs, with low ripple.

The main output provides 0 to 20V and has constant current overload protection which can be set in the range 0 to 1·2A.

The second output provides a fixed 5V output and is primarily intended for experimenting with TTL logic. The maximum current available is fixed at 1A.

A meter is provided for measuring the output voltage, current on the main output and the current drawn from the 5V output. Both supplies are short-circuit protected.

CIRCUIT DESCRIPTION

The circuit diagram of the unit is shown in Fig. 1. The circuit can be split into sections, the main output and the secondary output. The secondary output will be considered first.

The circuit is very conventional in the fact that all the work is done by the three terminal regulator integrated circuit, IC1.

SPECIFICATION

Variable output		Fixed output	
Range:	0 to 20V d.c.	Output:	5V d.c.
Max. current:	1·2A	Max. current:	1A
Ripple:	10mV peak-to-peak (supplying 15V at 1A)	Ripple:	8mV (supplying 1A)
Load regulation:	0·08% (measured at 20V between 0 and 1A)	Load regulation:	1·5% (between 0 and 1A)
Line regulation:	0·0065% (input voltage varied between 230V and 250V		

General	
Meter:	3 ranges V(0–20V), I(0–20V), I(5V)
Terminals:	4mm banana sockets

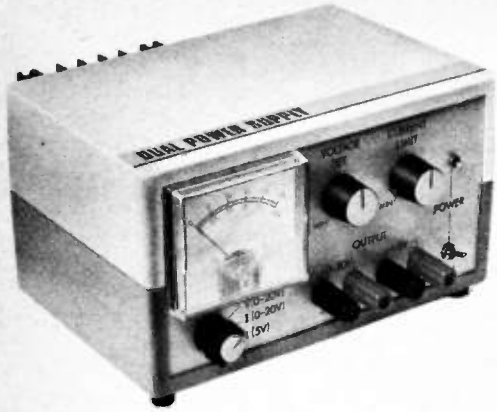

The a.c. input is provided by the transformer and is rectified and smoothed by the bridge rectifier D1–D4, and capacitor C1, respectively. The low value resistor R1 is used to sense the output current for the meter.

With an output current of 1A, half a volt is developed across R1. R2 is chosen to make the meter 0·625V full scale. The capacitors C2 and C10 are to prevent high frequency oscillations.

The main output is more complex, rather than use another monolithic regulator i.c. the higher stability of a LM723 was sought. The reason for this is because in a simple series regulated supply, a large amount of power is dissipated in the output transistor causing it to run hot. In a monolithic regulator this raises the temperature of the voltage reference and causes it to drift.

EXTERNAL AMPLIFIER

In a design using a discrete output transistor, the transistor and the reference are in thermal isolation. A very stable reference is provided by IC2. Readers familiar with the LM723 regulator will know of its inability to regulate at low output voltages, that is less than two volts. This limitation arises from the error amplifier, so in this design an external amplifier is used, a CA3140, IC3.

This amplifier will work with its input close to 0V. The voltage reference from pin 6, IC2 is fed via the voltage control potentiometer VR1 to the non-inverting input of IC3. A portion of the output voltage is fedback to the inverting input via the potential divider R10, R11. This feedback loop keeps the output voltage constant. The output of IC3 is used to drive the series pass Darlington pair made of transistors TR2 and TR3.

CURRENT LIMITING

The error amplifier in IC2 and its associated output transistor are used to limit the supply to IC3 to a maximum of 27V. The output current is sensed by resistor R8, when the current flowing through this is 1·2A, 0·625V is developed across it. If this were directly connected to pins 2 and 3 of IC2 this would result in the supply to the op-amp being reduced thus keeping the output current constant.

The current limit circuit is biased by

Fig. 1. Complete circuit diagram for Unit One, the Dual Power Supply. The main output provides 0 to 20V with constant current overload protection within range 0 to 1·2A. The second output provides a fixed 5V 1A supply specifically for experimenting with TTL logic.

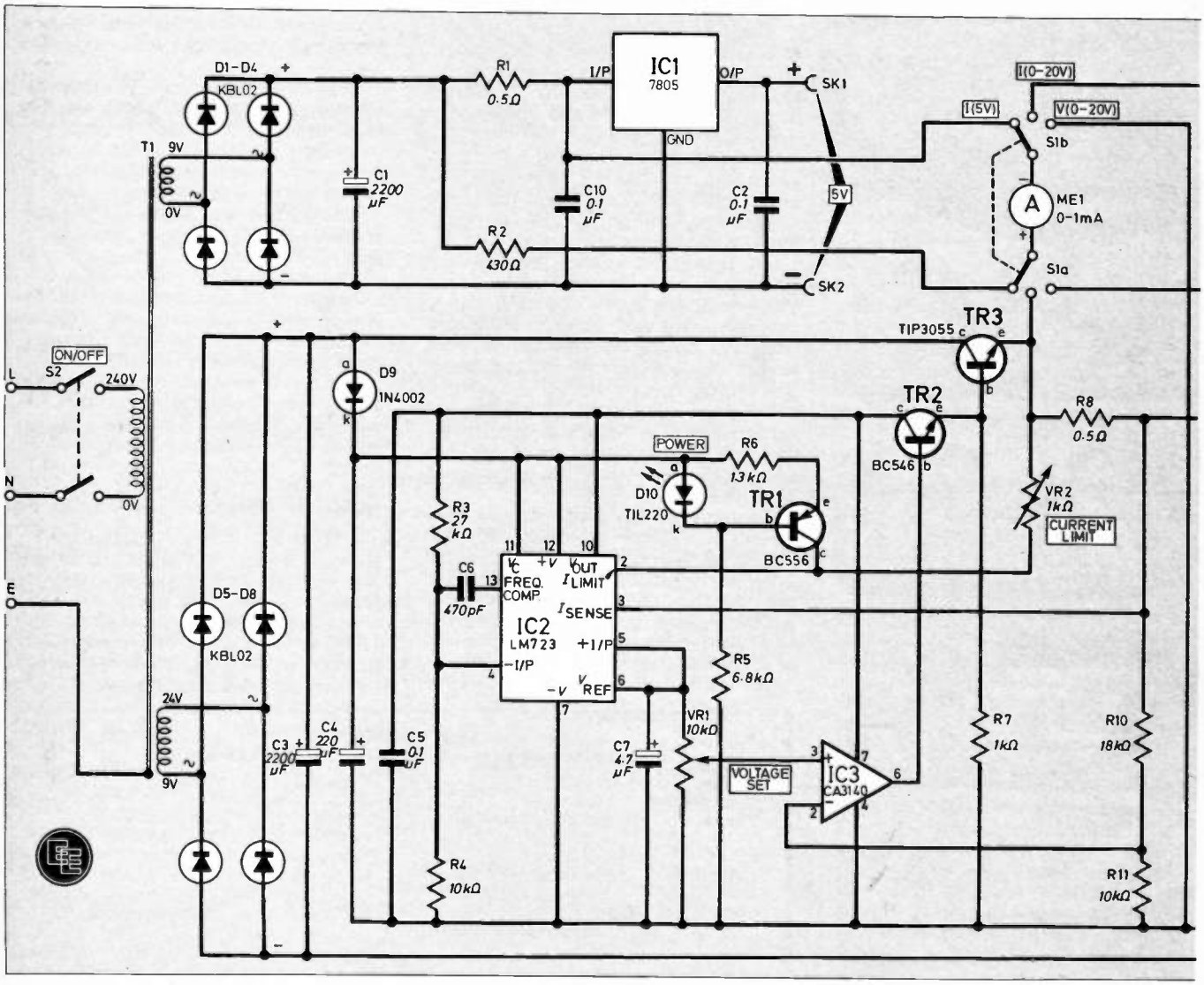

driving a constant current of 0·75mA from the current source TR1 and its associated components, through VR2. The voltage across VR2 is added to that across the sense resistor, increasing the current limits sensitivity.

The sense resistor is also used by the metering circuit to display output current.

The d.c. is provided by the 24V secondary from T1, bridge rectifier D5–D8 and capacitor C3.

CONSTRUCTION starts here

CIRCUIT BOARDS

The prototype was housed in a Vero case type 202-21036C. This case will be used throughout the *Test Gear 83* series

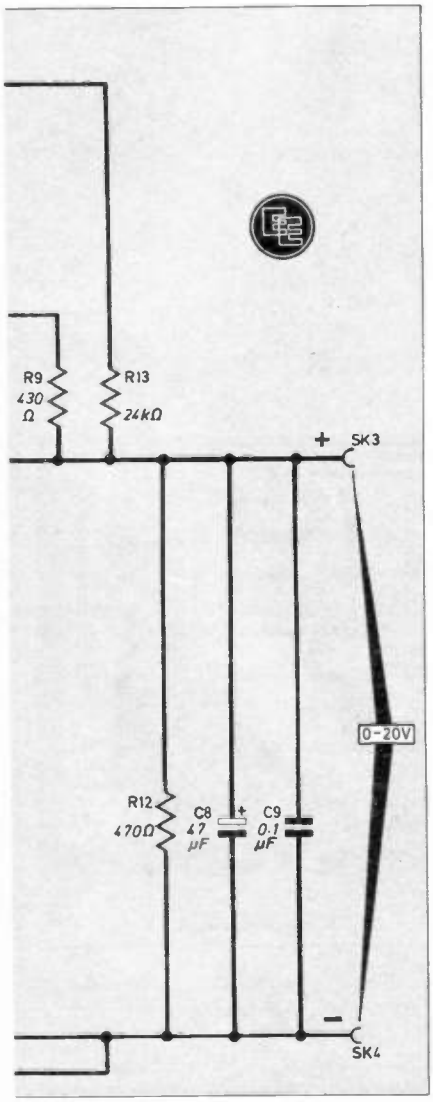

COMPONENTS

Resistors

R1,8	0·5Ω (2 off) 3W wire-wound	R6	1·3kΩ
R2,9	430Ω (2 off)	R7	1kΩ
R3	27kΩ	R10	18kΩ
R4,11	10kΩ (2 off)	R12	470Ω 3W wire-wound
R5	6·8kΩ	R13	24kΩ

All ¼W carbon ±5% unless otherwise stated

Capacitors

C1	2200μF 25V elect.
C2,5,10	0·1μF 160V Siemens (3 off)
C3	2200μF 40V elect.
C4	220μF 40V elect.
C6	470pF disc ceramic
C7	4·7μF 10V tantalum bead
C8	47μF 25V elect.
C9	0·1μF ceramic

See Shop Talk page 145

Semiconductors

D1–4	KBL02 200V, 4A bridge rectifier
D5–8	KBL02 200V, 4A bridge rectifier
D9	1N4002
D10	TIL220 red l.e.d.
TR1	BC556 *pnp* silicon
TR2	BC546 *npn* silicon
TR3	TIP3055 *npn* silicon plastic power
IC1	7805 5V, 1A regulator
IC2	LM723 adjustable voltage regulator
IC3	CA3140 MOSFET op-amp

COMPONENTS approximate cost £35

Miscellaneous

T1	mains transformer with 24V, 1·5A and 9V, 1·5V secondaries
ME1	1mA f.s.d. panel meter with 120Ω coil (type ML52)
S1	2-pole, 6-way midget rotary with adjustable stop
S2	d.p.d.t. miniature mains toggle
VR1	10kΩ control potentiometer
VR2	1kΩ control potentiometer
SK1,3	insulated terminal post red
SK2,4	insulated terminal post black

Verocase type 202-21036C; single-sided p.c.b. size 120 x 85mm and 85 x 75mm; heatsink size 89 x 75 x 51mm rated at 1·5°C/W; control knob (3 off); l.e.d. holder; Veropins; 7/0·2mm wire; 14/0·2mm wire; mains cable; grommet; P-clip; 14-pin d.i.l. holder; 8-pin d.i.l. holder; mounting hardware (M2·5 or 6BA).

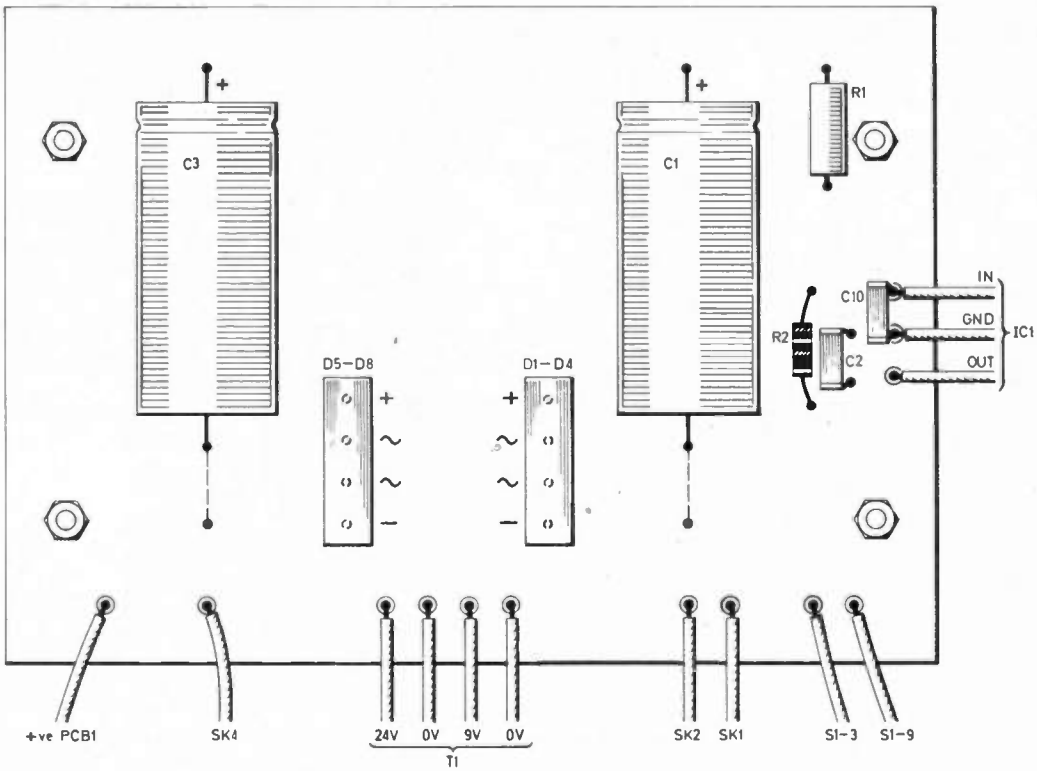

Fig. 2. Component layout and full size printed circuit board master (opposite page) for the 0–20V variable supply.

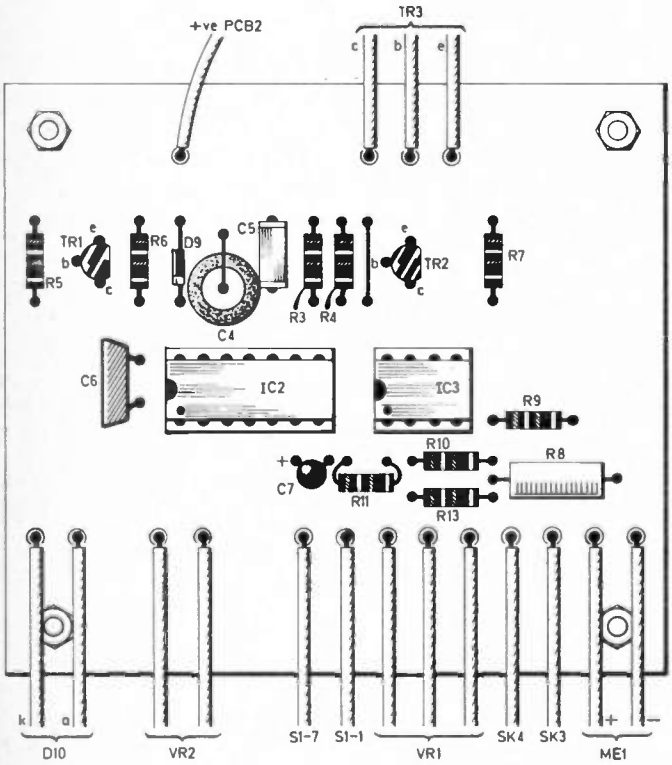

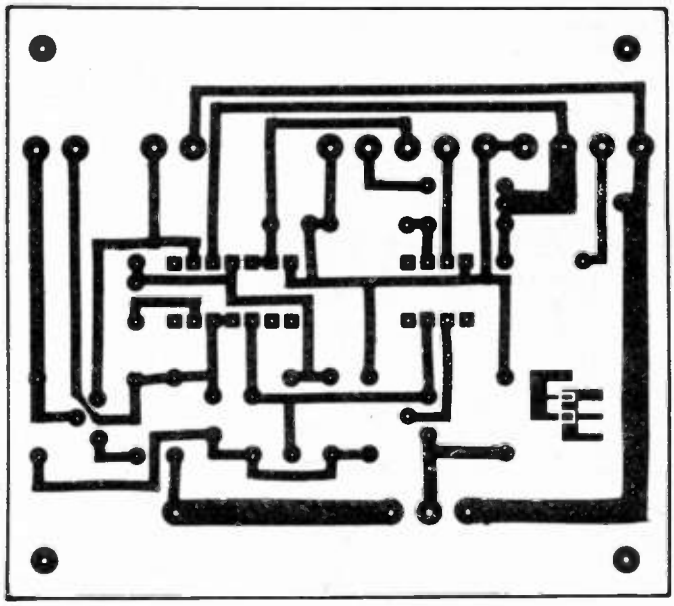

Fig. 3. Component layout and full size printed circuit board master for the 5V fixed supply.

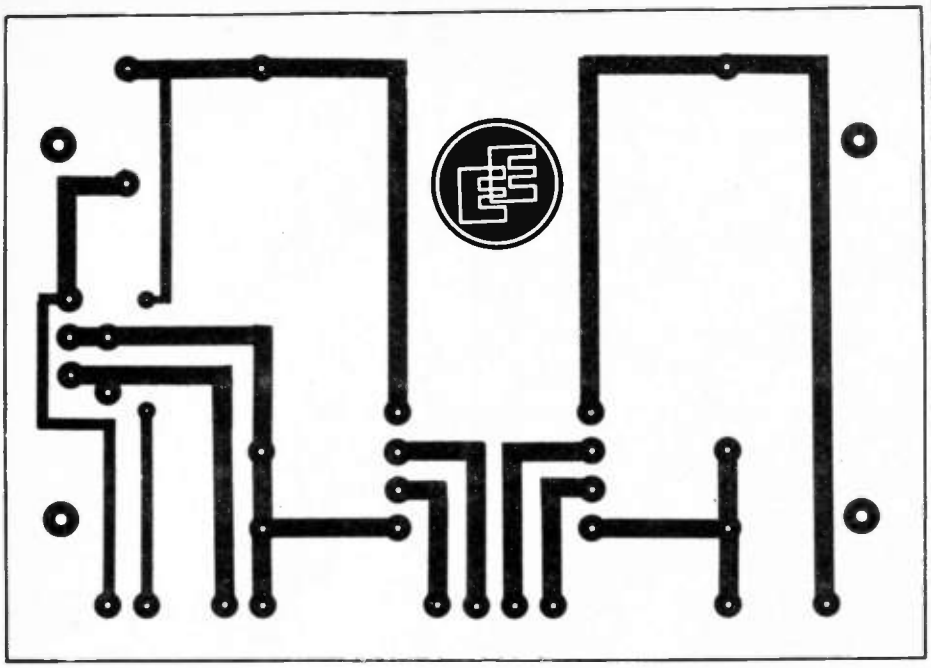

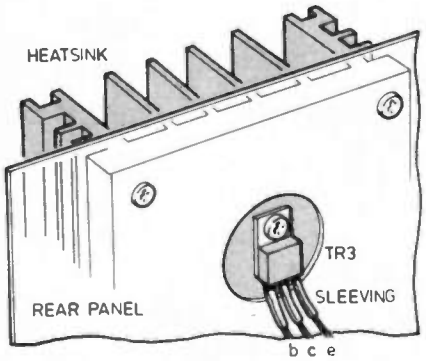

Fig. 5 (Left). Mounting details for transistor TR3. Note that no insulating kit is used on this transistor so the rear panel and the heatsink are connected to the collector and should not be "earthed".

Fig. 4 (Below). Drilling details for the front aluminium panel.

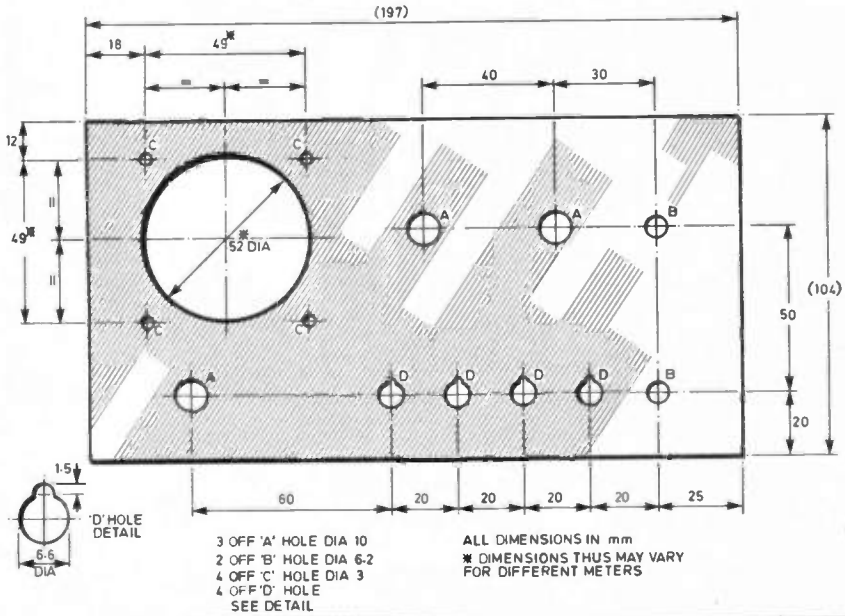

and should be available through the normal Vero distributors.

Begin construction with the circuit boards. If you are making the boards yourself pay special attention to their external dimensions. The prototype boards were laid out with etch resistant dry transfers. The p.c.b. artworks and component layout diagrams are shown in Fig. 2 and Fig. 3.

Solder the components to the board in the normal manner beginning with the passive components and the wire link, working through to the transistors and the diode. It will be found helpful if Veropins are inserted in the board where the flying leads leave it. Note that additional holes have been provided to allow for different sizes of capacitors, particularly C1 and C3 the smoothing capacitors.

CASE

Once the circuit boards are complete, the case can be prepared. Remove the four screws at the corners of the base, allowing the two halves to be separated. Remove the front and rear panels. To assist in marking out and to protect the panels from scratches it is advisable to fasten a piece of graph paper with double-sided tape. Mark the centre of the holes according to the dimensions given in Fig. 4 and then lightly centre-punch them. Without removing the protective paper, drill the holes. For the large holes it is better to drill a small hole (about 3mm) first and then drill the hole to the right size.

The large circular hole for the meter can be made two ways: either drill a series of small holes round the circumference and punch out the middle, then finish with a file; or use an Abra file in a hacksaw frame.

REAR PANEL

The rear panel holds the heatsink. The heatsink used on the prototype is available from Ambit International, Part 21-08030.

A 30mm diameter hole was cut to be the centre of the heatsink in the rear panel to allow the transistor TR3 to be mounted, see Fig. 5. Note that no insulating kit is used on this transistor so the rear panel and the heatsink are connected to the collector of the transistor and should not be earthed. The 5V regulator is mounted with a mica washer and an insulating bush. To aid heat transfer, a thin smear of heatsink compound should be applied to both sides of the washer and the power transistor.

Solder three wires to the leads of TR3, before mounting the rear p.c.b. on standoffs over the transistor. The rear panel assembly can now be replaced in the lower half of the case.

Screw all the front panel components in place having first cut to size the spindles on the potentiometers and the switch. At this stage it is best to attach wires to the panel mounting components, paying

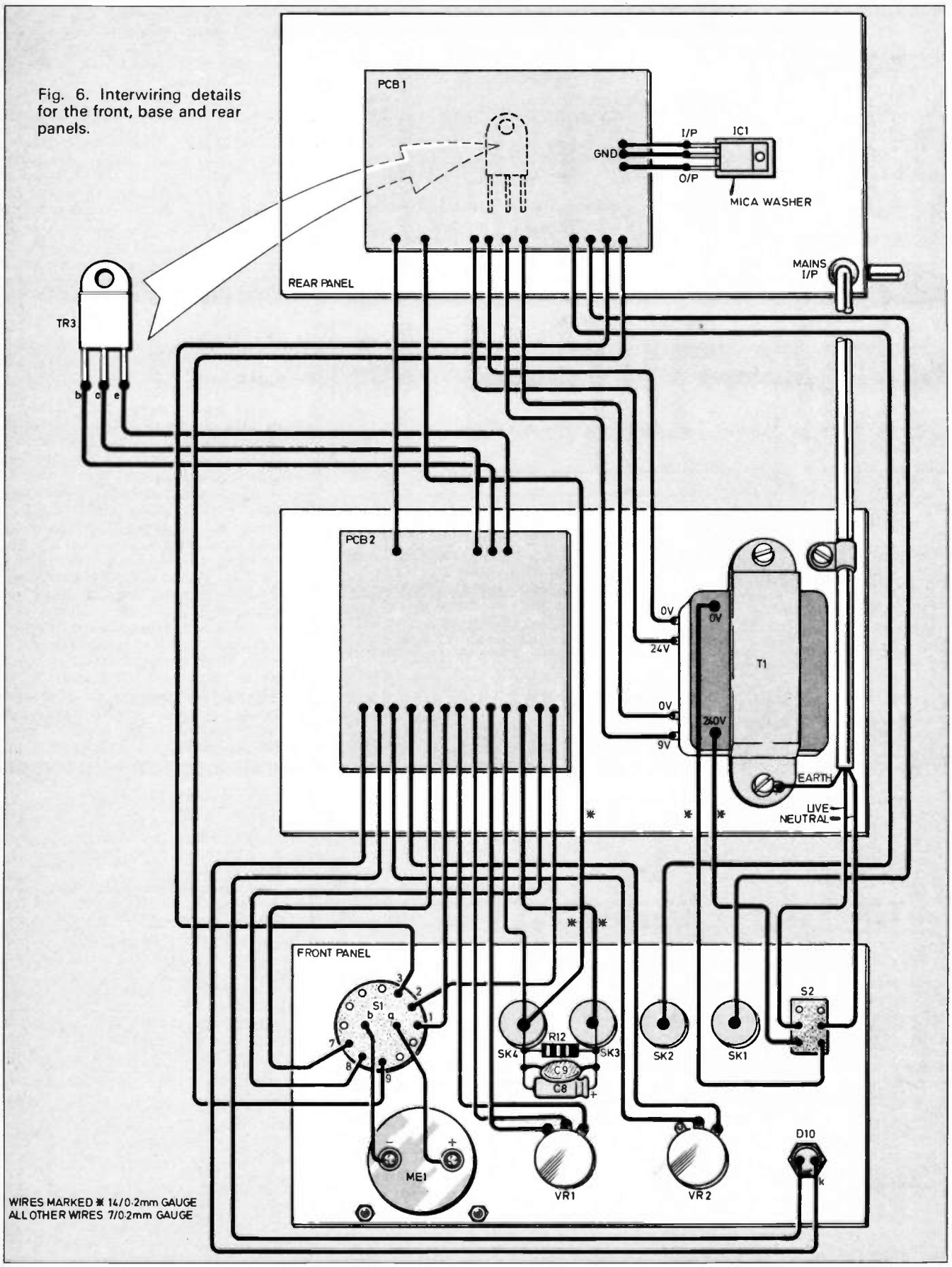

Fig. 6. Interwiring details for the front, base and rear panels.

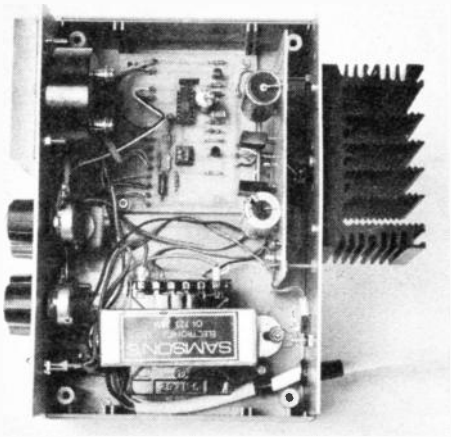

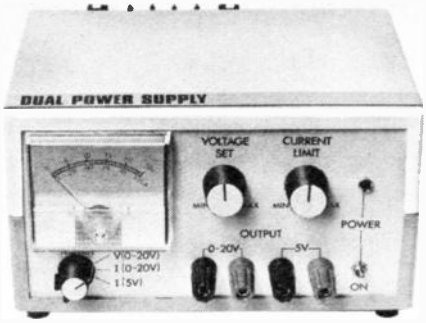

Front panel layout and lettering.

(Left). Positioning of mains transformer, and circuit boards within the case. The boards are held "proud" by their mounting nuts and bolts.

(Bottom left). Circuit board and TR3 on the rear panel.

The heatsink mounted on the exterior of the rear panel.

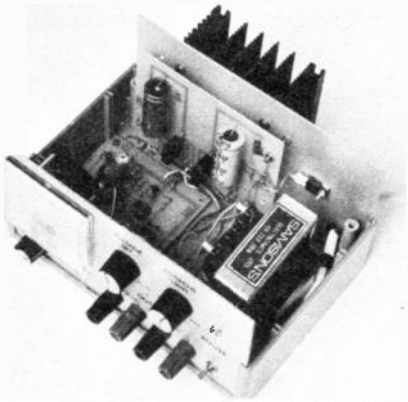

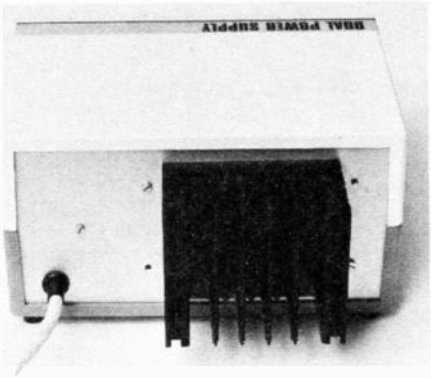

attention to the two thick wires, see Fig. 6. These wires must be thick or poor regulation will result. Once this has been done the panel can be slid into its mounting slots and the other ends of the wires be soldered.

IN USE

The power supply can be used to replace the power supply of a circuit under test. Turn the METER switch to voltage V (0–20V) and with no load connected and the current control turned up set the required voltage. Switch to the current setting I (0–20V) and turn the current control to zero. The load can now be connected and the CURRENT LIMIT control can now be increased. When the current stops rising the power supply is then operating in the constant voltage mode.

Should the load try and draw more current than the threshold, the supply will limit the current by reducing the voltage, that is, go into the constant current mode. The supply may be used in the constant current mode for recharging Ni-Cad batteries, take care though, not to exceed the manufacturers rated current.

When the supply is delivering a small output, a large voltage is developed across the series transistor and it will dissipate a lot of power. To avoid overheating the supply should not be operated in this condition for excessive lengths of time. The prototype was short circuited for a quarter of an hour with no ill-effects, although this is not recommended! □

COUNTER INTELLIGENCE

By PAUL YOUNG

Computer Holiday

Earlier this year I found myself, probably like the rest of you, bombarded with alluring holiday literature. There was no escaping it, the newspapers, the radio, the television, all combined to part you from your money in exchange for a fortnight's sunshine.

Unable to withstand the pressure I went to see my bank manager and tried to lull him into a sense of false security with talks of luxury cruises. "Yes, Young, I agree with you in principal, but I think I would be a lot happier if you went for a row round the Serpentine, it would be more in keeping with your present financial status."

Encouraged by his friendly remarks I had another look at the brochures and the following caught my eye. It was a picture of a young man and a young woman sunbathing, and the caption below said, "Don't just lie there, do something". It was an advertisement for a holiday on the shores of the Mediterranean, and thrown in at no extra cost was a course on computer programming. The idea being that when you were bored stiff with doing nothing you could learn something useful. Alas, the nearest I shall get to it is lying under my Solarium with my minicomputer, and trying to persuade my friends I have been away on one of these specials.

Paranormal

I think most readers will know I have a slight interest in the paranormal. I don't dabble in it but when a story comes along that has a slight electronic flavour about it, I unhesitatingly pass it on to my readers. Such an opportunity occurred recently and I seized it with both hands.

A short time ago I watched a programme on television. It concerned an old Inn situated in Wales. It had been there since before the Norman Conquest. Many people who had lived there testified that it was haunted, voices and footsteps, and even an organ had been heard playing.

An electronics expert became interested and examined the building, particularly the stone it was made of. It was a coarse local stone, but it had thin streaks running through it which he decided were metal or silicon.

Would it be possible, he thought, for these stones to act as a tape-recorder, and would it be possible to drive out the sound by applying a high voltage to the wall? With the permission of the Inn keeper, he and a friend drove long nails into the wall and arranged a time switch to apply a high voltage at 2.30am. A tape-recorder was left running to record the results.

At this point in the programme the commentator said, "I will now play you the tape". For the next few seconds there was silence and then a babel of strange voices and an organ playing weird music. It was really eerie and quite uncanny to listen to.

I thought I would try this experiment myself. I was just about to drive a six-inch nail into the wall when my better half said, "I shouldn't do that if I were you". I expostulated that I was interested in science and wanted to hear these strange voices and language. My spouse came back, "If you knock that nail in you will hear some unusual language without any voltage being applied."

Oh well, perhaps she is right; anyway, one shouldn't dabble in this kind of thing—there may be something in it.

THE ELECTRONICS OF it INFORMATION TECHNOLOGY

PART FIVE

BY T.E. IVALL C.Eng., M.I.E.R.E.

We encounter information as a measurable quantity most straightforwardly in storage systems. Their storage capacities are specified in units called **bits** (short for binary digits, to be explained below). A small random access memory, for example, might have a capacity of 1,024 bits. A magnetic disc store might have a capacity of 10 megabytes (where 1 **byte** is a group of 8 bits).

Another type of hardware for which a measure of information is used is data transmission equipment. Here, of course, we are concerned with a *rate* of flow of information from one terminal to another and this rate is measured in **bits per second.** British Telecom's Prestel service, for example, sends information over telephone circuits at 1,200 bits/second in one direction and at 75 bits/second in the other direction. A much faster system used by British Telecom, for data and other information, works at 2,048 kilobits/second.

UNIT OF INFORMATION

The need for a universally accepted unit of information is as important as the need for universally accepted units of length, mass, time, electric current and the many others derived from them. Without agreement on these units throughout the world—even though conversions between different systems of units may sometimes be necessary—not only science and engineering but the practical affairs of everyday life would come to a messy halt.

In a telecommunications system, for example, to make sure that a physical channel like a coaxial cable will actually convey information at the rate you wish to supply it from a given type of terminal, you must be able to measure the transmission capacity of the channel and the generating capacity of the terminal in the same units.

ORIGIN OF BINARY CODE

But why have we chosen the bit, or binary digit, as the unit for measuring information?

Just as the foot as a unit of length originally came from the adult human foot, so there is an historical background to the newer unit as well. The whole history of signalling, whether by light, sound, mechanical movement or electricity, shows that methods using **two opposing states** have been both practical and effective. They are simple and unambiguous.

We have used light/darkness in lamps and heliographs, sound/silence in sirens and foghorns, left/right positions of galvanometer needles in telegraph instruments, hole/no-hole in punched paper tape and on/off in various electrical systems.

Samuel Morse devised his now famous code with its two symbols, long and short, to make use of the two positions of the armature, and the resulting black/white inked pattern, in his electromagnetic telegraph. In turn, the code was utilised in later signalling systems. In modern communications and electronics, of course, there are various techniques for providing the two states—for example, two different voltage levels of two different frequencies.

So the development over the years of a useful technology for sending information in terms of two states has been a strong incentive for us to consider information as being reducible to this simple binary form. But apart from the practical considerations there is also a good theoretical basis for the binary digit as a unit of information.

SELECTION OF SIGNS

The communication of information is fundamentally a selection of signs from a fixed and agreed set of signs. This is so whether we are concerned with selecting sounds from a vocabulary, letters from an alphabet or words from a dictionary.

When we write in English we successively select letters from a set limited to 26. In another language the total number in the set might well be different. One might invent a written language with an alphabet of only 12 characters, or 7, or 4—or only two, say ■ and ▲. It would be

Optical fibre cable (left) that will replace the old style metal conductor and metal sheathed coaxial cable (right) in modern telecommunications networks are shown for comparison in this British Telecom picture. Optical fibres have a much greater transmission capacity than traditional coaxial cables. Pulse rates in excess of 140 million per second have been achieved over distances of 100km without intermediate amplification.

perfectly feasible to provide enough combinations of ■s and ▲s to signify all the meanings we wanted (though most of the words would have large numbers of these signs).

Two signs are, of course, the smallest possible "alphabet". Below that no choice is available. Thus a selection from two possible signs—a binary choice—is the elemental choice. In the numeration of binary arithmetic the two signs are conventionally written as 1 and 0, but the actual characters used are quite unimportant.

So, if the **binary choice** is the basic element of selection it is also the basic element of information, on the principle of selecting from a set discussed above. When we make a choice of one sign in a binary system of notation we are automatically implying "one out of two". For historical reasons the two written numerals of binary arithmetic have become well established, so it is now conventional to describe the choice as being one out of two *digits*. Hence the **binary digit**, or **bit**.

A store designed to hold binary information is a group of two-state elements (electronic devices or magnetic cells), one for each binary digit. The capacity of the store is simply the number of two-state elements available to hold the digits. But what about information that is not already in binary digital form, such as sound or vision signals?

SUCCESSIVE BINARY CHOICES

By making a succession of binary choices we can make selections from much larger sets than just two signs—as large as we want, in fact. Fig. 5.1 shows how a selection can be made of one sign (the letter F) from an eight-character alphabet by a series of three binary choices. Therefore the number of bits of information contained in the knowledge that one letter has been selected from an alphabet of eight* is 3. If this whole selection were made in, say, a tenth of a second the information rate would be 30 bits per second.

Now let us see how this principle can be applied to information in electrical signals. First, in place of the eight letters write a set of eight voltages on a scale. Then add a horizontal time scale to allow a signal to be represented as a voltage/time graph. The result is Fig. 5.2.

We can now select by a series of binary choices any one voltage from a group of eight voltages, and the information contained in the knowledge that this particular voltage has been selected is 3 bits. This signal is not actually drawn as a continuous voltage/time graph but is defined approximately by an invisible line passing through the points marked at the different voltage levels.

If we doubled the number of voltages in the set to 16 the signal would be defined more accurately by more points, as shown in Fig. 5.3, but because more binary choices would be required to allow this, the information content of any one point on the graph would become 4 bits.

In theory, to define any signal perfectly would require an infinite number of voltage level points, infinitely close together (see Part 1 on "Representing information electrically"). In practice, it does not have to be all that great; for example, a good quality television signal calls for a minimum of eight binary choices (8 bits) which means selections from a set of 256 voltage levels.

* The generalised formula is: number of bits = $\log_2 N$, where N is the number of signs in the set.

INFORMATION RATE

The information *rate* of the signal in Fig. 5.2 is determined by the time intervals between the voltage points defining the graph. This varies between 60 milliseconds (giving 16·6 bits/second) and 360 milliseconds (giving 2·8 bits/second).

In practice we have to allow for the highest information rate necessary for the class of signal we are dealing with. A television signal, for example, calls for a maximum information rate of about 11 million bits/second, while a telephone voice signal requires a maximum rate of about 8,000 bits/second.

INFORMATION CHANNELS

A channel is a means of transmitting an individual, recognisable signal or train of information—say a voice signal or telex message—from one place to another. Usually this transmission is in one direction only, but sometimes the term "channel" implies bi-directional transmission. The physical means of transmission ranges from a simple pair of wires, as used for the domestic telephone line, to coaxial cables, radio links, waveguides and optical fibres.

By using carriers (Part 3) or time-sharing methods (Part 4) we can accommodate a whole group of channels within a single transmission system such as a coaxial cable, without the individual trains of information interfering with each other. This is **multi-channel transmission.**

What mainly matters in information technology is the capacity of a channel to convey information—the maximum flow rate in bits per second that it will handle. This depends on a number of physical quantities in the transmission system. One is the electrical power in the **signal;** another is the electrical power in the **noise** (unwanted random fluctuations) introduced by the transmission system itself.

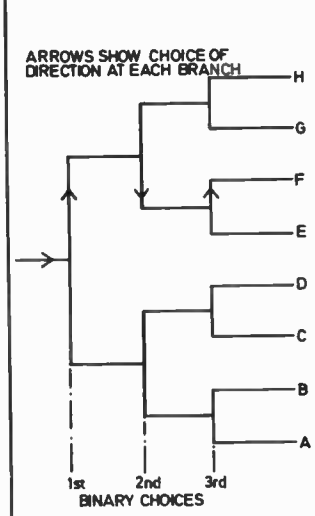

Fig. 5.1. This "tree" diagram shows how one sign may be selected from a fixed set of signs by making a series of binary choices (of direction at the branching points). Three binary choices are required to select any sign from a set of eight.

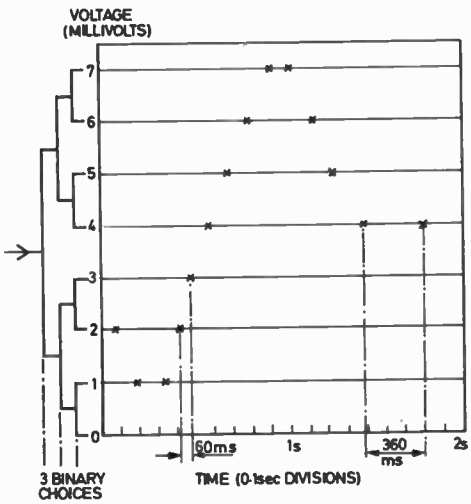

Fig. 5.2. The binary selection process of Fig. 5.1 applied to a set of discrete voltage values forming a signal. Here the signal is defined by selections from a set of eight possible voltage levels.

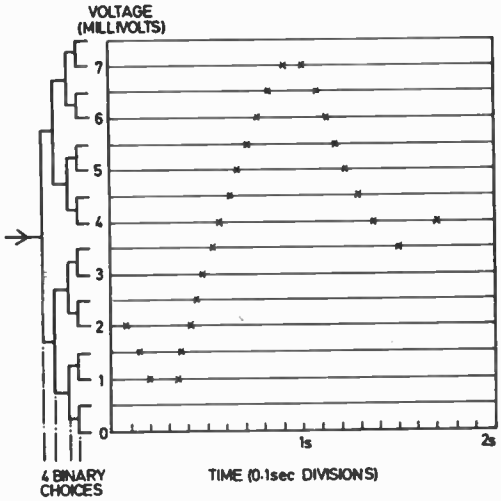

Fig. 5.3. The same signal as in Fig. 5.2 but here defined more precisely in terms of 16 possible voltage levels.

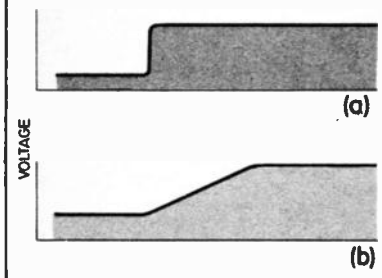

Fig. 5.4. Parts of two signals, illustrating different rates of change of voltage with time.

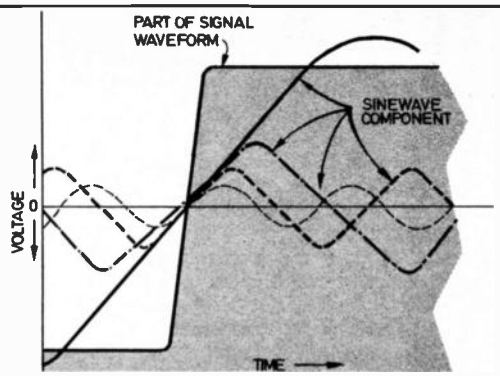

Fig. 5.5. How a signal waveform may be analysed into a set of sine-wave components (Fourier analysis). Not all of the components that make up this signal waveform are shown here.

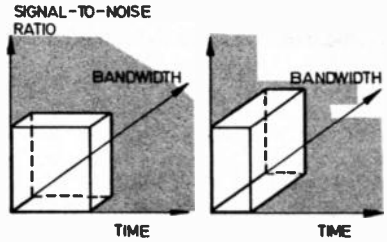

Fig. 5.6. Three-dimensional analogy in which the box is a quantity of information (bits). In transmitting a given quantity of information (the volume of the box), the time taken, bandwidth and signal-to-noise ratio may be exchanged with each other. These two examples illustrate an exchange of time and bandwidth (signal-to-noise ratio remaining constant).

SIGNAL-TO-NOISE RATIO

The presence of noise sets a limit to the number of distinct levels in a signal waveform that can be detected, Fig. 5.2 and Fig. 5.3). Sufficient power in the signal will make the effect of this noise insignificant, but there are practical limits to the amount of power that can be transmitted. The relationship of these two (average) powers—the signal-to-noise ratio—is therefore important in determining the accuracy of the information received at the end of the channel.

Another factor determining the accuracy of signal transmission is the ability of the channel to convey the variations of the electrical quantity (Part 1) that represent information—more specifically, the *rate of change* of these variations. For example, Fig. 5.4 shows parts of two signal waveforms, each of which is a transition between two steady voltages. In (a) the rate of change of voltage with time is higher than the corresponding rate of change in (b).

In a channel using, say, a wire cable as a transmission medium, the resistance and reactance of the wire together limit the rate of change of an electrical quantity that can be sent along it. Consequently, if the signal waveform at the input of the channel contains higher rates of change than the medium can transmit, the waveform received at the end will be distorted and hence the information will contain errors.

For example, the transition at (a) in Fig. 5.4 could be considered as part of a signal fed to the input of a channel. If the channel were incapable of transmitting this rate of change the transition as received at the end of the channel would be something like (b).

BANDWIDTH

The ability of a channel to convey such rates of change is determined by its **bandwidth**, measured in hertz (Hz). This term may require some explanation. Any signal waveform can be analysed into a number of sine-wave components of different magnitudes, frequencies and phases.* This is illustrated in Fig. 5.5 which shows some, but by no means all, of the sine-wave components which, when added together, constitute the signal waveform shown.

Each component has a maximum rate of change. A channel will convey a limited range of these sine-wave components, and the bandwidth of the channel is the extent of the continuous range, in Hz, over which the channel transmits a specified proportion of the original signal power. The bandwidth of a typical telephone voice channel, for example, is about 4,000Hz.

The channel's bandwidth therefore indicates the rates of change that can be transmitted and, as a result, the number of independent levels of a waveform that can be conveyed by it in a given time. It is therefore a factor in determining the maximum information rate in bits/second.

THREE QUANTITIES

So signal power, noise power and bandwidth together determine the highest rate at which a channel can convey information. The exact relationship of the three quantities to this maximum rate is given by an expression* which enables the channel to be matched to a given source of information, or vice-versa.

In some IT systems it is possible to adjust the rate at which information is generated at the source—to alter the length of time available to convey a given number of bits. This enables us to alter the bandwidth and/or signal-to-noise ratio required. A graphical analogy of this inter-dependence is given by the "box" diagrams in Fig. 5.6.

The volume of the box, the triple product of time, bandwidth and signal-to-noise ratio, is proportional to a given number of bits of information. Obviously it is possible, as shown by the two examples, to change the time available, the bandwidth and the signal-to-noise ratio (actually it is $\log_2$), in various ways that will maintain constant the volume representing the quantity of information.

A good example of this, known to some experimenters, is slow-scan television. If you increase the length of time available to send a given quantity of information in a picture, you can transmit the picture in a channel of smaller bandwidth than would otherwise be possible.

To be continued

* Mathematically inclined readers will know this as **Fourier analysis.** The sine-wave components are expressible mathematically as the terms of a Fourier series (named after the French mathematician and physicist J. P. J. Fourier).

* Derived by C. E. Shannon. $C = W \log_2(1 + S/N)$, where C = maximum capacity of channel in bits/second, W = bandwidth in hertz, S = mean signal power in watts, and N = mean noise power in watts.

PRACTICAL
ELECTRONICS
MARCH 1983
FREE SCRATCH PAD
PROJECTS
Ice/Lights Alarm
Car Accessory Power Supply
4½ Digit Frequency Meter
Case Alarm
FEATURES
Circuit Layout Simplified using the *free* Scratch Pad
Into The Real World—Interfacing micros
Microfile: 1802 data
PLUS
Extra Ingenuity Unlimited
ON SALE NOW

ELECTROVALUE

- 24 HOUR NORMAL DESPATCH TIME
- ESTABLISHED 1965
- ALL GOODS GUARANTEED BRAND NEW AND TO SPECIFICATION
- APPOINTED SIEMENS DISTRIBUTORS

I.Cs – DIGITAL & ANALOGUE

DIGITAL

74LS

74LS00	11
74LS02	11
74LS04	12
74LS05	12
74LS08	12
74LS10	12
74LS11	12
74LS14	25
74LS20	13
74LS30	12
74LS32	13
74LS37	14
74LS38	14
74LS42	28
74LS47	36
74LS51	14
74LS73	18
74LS74	16
74LS75	18
74LS76	15
74LS85	40
74LS86	16
74LS90	22
74LS92	30
74LS93	22
74LS107	20
74LS112	20
74LS123	34
74LS125	24
74LS126	25
74LS132	34
74LS136	23
74LS137	90
74LS138	25
74LS139	27
74LS145	70
74LS148	75
74LS151	40
74LS153	40
74LS153	40
74LS155	30
74LS156	36
74LS157	27
74LS161	36
74LS163	36
74LS164	30
74LS165	50
74LS166	60
74LS173	55
74LS174	45
74LS175	40
74LS191	36
74LS193	40
74LS195	39
74LS196	48
74LS197	60
74LS221	48
74LS240	55
74LS241	55
74LS242	55
74LS243	55
74LS244	55
74LS245	70
74LS251	30
74LS253	30
74LS257	30
74LS259	55
74LS266	20
74LS273	55
74LS279	30
74LS299	150
74LS367	30
74LS368	28
74LS373	60
74LS374	55
74LS378	60
74LS393	45

7400

7400	11
7401	11
7402	11
7403	12
7404	13
7405	15
7406	20
7407	20
7408	14
7409	14
7410	14
7413	18
7414	20
7420	15
7430	14
7440	14
7442	32
7443	60
7444	60
7447	36
7448	40
7450	14
7451	14
7453	14
7454	14
7460	14
7470	24
7472	24
7473	26
7474	30
7475	25
7476	25
7480	35
7482	65
7483	38
7485	60
7486	18
7489	159
7490	20
7491	35
7492	25
7493	25
7494	35
7495	35
7496	34
74100	80
74104	45
74107	20
74121	24
74123	34
74125	34
74126	33
74141	51
74151	40
74154	60
74155	39
74156	40
74157	30
74190	45
74191	45
74192	45
74193	45
74393	95

CMOS

4000	10
4001	10
4002	12
4006	50
4007	14
4008	32
4009	24
4010	24
4011	11
4012	16
4013	20
4014	46
4015	40
4016	20
4017	32
4018	45
4019	25
4020	42
4021	40
4022	39
4023	14
4024	32
4025	13
4026	80
4027	20
4028	39
4029	45
4030	15
4041	40
4042	40
4043	40
4044	40
4046	46
4049	23
4050	23
4060	45
4069	13
4070	13
4071	13
4072	13
4081	13
4082	13
4093	20
4510	45
4511	45
4514	110
4516	53
4518	40
4520	50
4543	75
4583	90

All above prices are NET and shown in pence

ANALOGUE

709C5	49
709C14	44
723C14	36
741C5	57
741C8	16
741C8/S	56
741C14	47
747C14	65
748C8	35
741S	56
1458C5	62
1458C14	40
7106	450
7107	500N
555	10N
7555	80N
556	45
CA3046	70N
CA3080E	80N
CA3130E	90N
CA3140E	45N
LM301AN	25N
LM308N	60
LM317K	295N
LM324N	32
LM348N	65
LM380N	66
LM380N8	80
LM381N	145
LM382N	115
LM3900N	50
LM3914N	250
LM3915N	200
NE555V	23
NE556A	45
NE567N	104
RC4151NB	80
S041E	290
S041P	121
S042E	364
S042P	138
S89	11.23
S178B	31.00
S187	13.28
S566B	214
S576A	235
S576B	235
S576C	235
S576D	225
S1469	468
SAB0600	302
SAB3209	429
SAB3210	311
SAB3211	168
SAB3271	329
SAB4209	497
SAB8256C	35.40
SAD1024	9.00N
SAJ131	238
SAJ141	278
SAJ205	810
SAS231W	261
SAS251	142
SAS580	198
SAS590	196
SDA5680A	15.55
TAA761	104
TAA761A	49
TAA765A	62
TAA861	103
TAA865A	59
TAA2761A	72
TAA4761A	113
TAA4765A	120
TAB1041K	187
TBA120AS	62
TBA120U	72
TBA800	75
TBA10S	75
TBA820	75
TBB1458	62
TBB1458B	40
TCA105	120
TCA105B	108
TCA105G	140
TCA250A	185
TCA205K	200
TCA335A	66
TCA345A	109
TCA345W	177
TCA671	131
TCA780	211
TCA871	114
TCA955	228
TCA965	136
TCA965K	170
TCA971	92
TCA991	80
TCA991K	100
TDA2002	120
TDA2003	126
TDA2030	150
TDA4050B	144
TDA4290	169
TDA4600	184
TDA4700A	546
TDA4713A	435
TFA1001W	252
TL071CP	45
TL072CP	75
TL074CN	120
TL081CP	46
UAA170	165
UAA170L	152
UAA180	165
UAA190	141
XR2206	520
ZN414	85
ZN424P	99
ZN425E	350

CRYSTALS

(in MHz)			
0.032768	102	4.433	128
0.100000	453	4.915	157
1.000	453	5.000	157
1.8432	320	5.026	128
2.000	268	5.000	157
2.4576	268	6.144	157
3.2768	188	6.5536	128
3.579	128	8.000	188
4.000	102	8.867	128
4.194	128	10.000	157
		18.432	188

ZENER DIODES

400mW/2.7-30V	7p
1.3W/3.3-100V	15p
20W/7.5-75V	£1.98

CONNECTORS

DIN AUDIO

Pins	plug	skt
2	8p	8p
3	14p	8p
4	17p	14p
5 (180°)	17p	11p
5 (240°)	20p	8p
6	18p	20p
7	19p	30p

JACK PLUGS SKTS

MONO

chrome	P1	53p	34p 42p
plastic	P2	32p	14p 20p

STEREO

chrome	P3	81p	52p
plastic	P4	60p	15p 20p

MONO

3.5mm	18p	14p	
Stereo	23p	42p	

SERIES

	Plug	skt	Recd
9	78p	104p	92p
15	106p	140p	96p
25	141p	205p	110p
37	199p	298p	122p

IDC Connectors

DIL

14 way	103p
16 way	117p
24 way	170p
40 way	265p

PARALLEL TYPE

	plug	skt
16 way	1.10	1.30
20 way	1.25	1.45
26 way	1.50	1.70
34 way	1.65	1.95
40 way	1.85	2.10

Plugs have retainers. Sockets have strain relief

IC SOCKETS

Pins	Each	25 for
8	6	120N
14	8	160N
16	9	180N
18	11	220N
20	12	240N
22	14	280N
24	15	300N
28	18	360N
40	25	500N

CAPACITORS

Polystyrene, Siemens
5% Tolerance 160V
5, 7, 10, 12, 15, 18, 22, 27, 33, 39pF 15p; 47, 56, 68, 82, 100, 120, 150, 180, 220, 270, 330, 390, 470, 560, 680, 820pF, 1n, 1n2, 1n5, 1n8, 2n2, 2n7, 3n3, 3n9, 4n7, 10p; 5n6, 6n8, 8n2, 10n, 13p

Ceramic Very small 1.8, 2.2, 2.7 etc, up to 1n 5p each. 1n5, 2n2, 3n3, 4n7, 6n8, 5p; 10n, 22n, 6p; 33n, 47, 7p; 100n, 8p

Polyester, Siemens Layer Type 7.5mm lead spacing 100V
1n, 1n5, 2n2, 3n3m 6p; 4n7, 6n8, 8n2, 10n 12n, 15n, 18n, 22n, 33n, 47n, 7p 56n, 68n, 7p; 82n, 100n, 9p 120n, 150n, 15p; 180n 220n, 12p; 270n, 330n, 330n, 390n, 470n, 15p; 560n, 680n, 24p; 10mm spacing 1uF 25p; 15mm spacing 2u2 35p; 22.5mm, spacing 1uF 400V 50p; 3.33uF 100V 69p; In depth stocks

ELECTROLYTICS

1/63	9	1000/10	19
2.2/25	13	1000/16	26
2.2/63	9	1000/25	36
4.7/63	9	1000/40	44
4.7/100	14	1000/63	76
6.8/40	9	2200/6	9
10/6	13	2200/16	44
10/25	10	2200/25	60
10/40	11	2200/40	73
10/63	12	4700/16	72
10/100	15	4700/25	90
22/10	10		
22/25	11	**TANTALUM BEADS**	
22/40	14		
22/63	15	0.1/35	13
22/100	16	0.22/35	13
47/3	3	0.47/35	13
47/10	11	1.0/35	13
47/25	10	2.2/16	13
47/40	15	2.2/35	16
47/63	15	4.7/16	16
47/100	18	4.7/35	18
100/3	3	6.8/16	16
100/10	12	6.8/25	24
100/16	12	10/6.3	16
100/25	12	10/16	18
100/40	15	10/25	18
100/63	20	22/6.3	18
100/100	27	22/16	30
220/10	16	22/25	30
220/16	16	33/6.3	24
220/25	16	33/10	30
220/40	20	47/6.3	30
220/28	28	100/10	66
220/100	42	For full ranges	
470/10	19	of very many	
470/16	19	other types	
470/25	19	please see	
470/40	27	Cat 82 and/or	
470/63	45	current price	
470/100	73	list	

BOXES

High quality Black ABS plastic or die-cast plain or stove grey

L	W	D	ABS		Plain		Stove Gr	
50	50	25			5001P	90p	5001	123p
100	60	25	2002	96p	5002P	117p	5002	154p
113	63	31	2003	109p	5003P	143p	5003	184p
121	66	40	2004	115p	5004P	162p	5004	210p
152	82	50	2005	134p	5005P	216p	5005	268p
192	113	61	2006	236p	5006P	314p	5006	401p

VERO RANGE plastic boxes

L	W	D		
72	47	25	21024	54p
120	50	35	21390	87p
180	110	55	21391	160p

G RANGE professional instrument Cases

134	90	44	21089	£7.68
224	140	64	21090	£11.62
302	170	84	21091	£15.78

VEROBOX CASES

to give a completely professional finish to a much valued project.
ABS, light grey top, dark grey bottom + 2 anodised panels

L	D	H	TYPE	PRICE
205	140	40	21034	£4.52
205	140	75	21035	£5.02
205	140	110	21036	£6.54
180	120	39	21037	£4.11
180	120	65	21038	£4.40
180	120	90	21039	£4.69
155	85	39	21040	£3.31
155	85	60	21041	£3.31
155	85	80	21042	£4.30
125	65	30	21047	£2.48
125	65	39	21048	£3.15
125	65	50	21049	£3.56

METERS

Large range of types in stock, also probes, leads, accessories, etc.
PANEL MOUNTING in 50, 100, 500μA, 1, 5, 10, 50, 100, 500mA, 1A either model

MU Range 50 × 45mm £2.68

T Range 60 × 45mm £5.95

MULTIMETERS

NH56A NEW 20KΩ/V AC/DC/RES/dB in 23 ranges. 130 × 88 × 37mm **£11.20N**

YN360TR 20KΩ/V AC/DC/R/dB/Transistor Test in 21 ranges. 145 × 96 × 45mm **£18.45N**

SEMICONDUCTORS

1N914	03	2N3819	22	AA118	14	BC214	09
1N914B	10	2N3820	40	AA119	13	BC214L	09
1N916	52N	3823	60	AC126	25	BC238C	09
1N4007	06	2N3904	15	AC127	25	BC239C	09
1N4148	03	2N3906	15	AC128	25	BC258	09
1N5402	14	2N4036	46	AC151R	55	BC267B	16
1N5407	18	2N4058-62	09	AC153K	20	BC300	32
2N697	23	2N4124	25	AC176	25	BC301	24
2N706	18	2N4126	25	ACY17	156	BC303	30
2N930	20	2N4284	30	ACY18	120	BC327	16
2N1132	23	2N4286	18	ACY19	99	BC328	11
2N1302	110	2N4289	23	ACY20	90	BC337	14
2N1303	58	2N4291	24	ACY21	85	BC338	11
2N1304	62	2N4292	21	ACY39	170	BC413	09
2N1305	62	2N4991	62	ACY41	10	BC414	09
2N1306	90	2N5062	32	AD136	530	BC477	24
2N1307	67	2N5192	110	AD142	80	BC546	10
2N1308	147	2N5195	108	AD149	88	BC547	09
2N1309	99	2N5457	32	AD161	35	BC548	09
2N1599	100	2N5458	32	AD162	35	BC549	09
2N1613	25	2N5459	38	AF114	37	BC550	10
2N1711	25	2N6050	380	AF115	37	BC556	10
2N1893	32	2N6057	378	AF116	57	BC557	09
2N2218A	31	6F40	152	AF117	110	BC558	09
2N2219A	25	16F40	186	AF124	AF125 37	BC559	09
2N2222A	25	40HF40	225	AF126	37	BC560	10
2N2369A	21	40361DIS		AF127	37	BC639	30
2N2484	25	40362	65	AF200	10	BC640	32
2N2646	46	40406	71	AF239	114	BD644	42N
2N2904	28	40408	95	AF279	30	BD679	62
2N2904A	25	40412	108	AFY12	204N	BD680	64
2N2905A	25	40430	100	AFY16	327N	BF115	16
2N3053	23	40594	123	AFY180	310N	BF167	25
2N3054	56	40595	123	AFY18E	615N	BF173	25
2N3055	48	40636	147	AFY42	461N	BF177	28
2N3405	64	40673	146	AU106	240	BF178	25
2N3663	15	A3903	18	AU111	(use	BF244B	40
3702-11	08	AA113	13	AU116)		BF254	14
2N3771	180	AA116	9	AUY22	10.95	BF255	14
2N3794	21	AA117	13	BD140	25N	BF420	31
						BF421	34
						BF457	36
						BF458	35
						BF459	35
						BF597	12N
						BFR34A	84

BC238C	09	BFR39-41	23	E1210	76	BC213L	09
BC239C	09	BFR79-81	23	E2506	154		
BC258	09	BFT65	119	EB383	20		
BC267B	16	BFT66	192	MJ2955	90		
BC300	32	BFX29	24	MJE340	56		
BC301	24	BFX84	24	MJE2955	95		
BC303	30	BFX85	24	MJE3055	70		
BC327	16	BFX87	28	MPF102	40		
BC328	11	BFX88	26	MPS6531	40		
BC337	14	BFY50	24	MPS6534	42		
BC338	11	BFY51	24	MPSA12	38		
BC413	09	BFY52	24	MPSA63	38		
BC414	09	BFY90	143	NAS206S5	81		
BC477	24	BR34	70	OA47	12		
BC546	10	BR64	110	OA90	10		
BC547	09	BRY39	46	OA91	10		
BC548	09	BSX20	22	OA95	DIS		
BC549	09	BSX26	22	OA202	14		
BC550	10	BSX63	769N	OC28	75		
BC556	10	BT106	147	OC29	75		
BC557	09	BT108	136	OC35	75		
BC558	09	BU105	170	OC36	90		
BC559	09	BU124	85	OC84	25		
BC560	10	BU208	180	PM7A2	373		
BC639	30	BUX26	350N	PN70	10		
BC640	32	BUX28	546	PN72	05		
BD644	42N	BUX81	744	Q4006LT	104		
BD679	62	BUX85	249	Q4010LT	115		
BD680	64	BUZ10A	478	Q4025H	460		
BF115	16	BUZ15	12.27	T2700D	189		
BF167	25	BUZ20	523	T2800D	104		
BF173	25	BUZ23	787	TAG3-400	100		
BF177	28	BUZ24	12.50	TAG209-400	85		
BF178	25	BUZ32	625	TAG209-600			
BF244B	40	BUZ33	844		130		
BF254	14	BUZ41A	637	TIC106D	48		
BF255	14	BUZ44A	9.67	TIC106M	56		
BF420	31	BUZ45	12.76	TIC126D	64		
BF421	34	BUZ48	18.94	TIC206D	54		
BF457	36	BUZ50A	763	TIC226D	61		
BF458	35	BUZ54A	21.43	TIC236D	96		
BF459	35	BUZ80	739	TIC246D	105		
BF597	12N	BUZ83	11.29	TIP31A	36		
BFR34A	84	BUZ83A	11.95	TIP32A	36		
		BUZ84A	12.75	TIP41A	46		
		BY164	48	TIP41C	60		
		C106D1	46	TIP42A	46		
		C0326	460N4	TIP42C	60		
		C0340	490N4	TIP150	75		
		C407	17	TIP2955	56		
		C0546	126N1	TIP3055	56		
		C762	40	TIS43	50		
		C1406	77	U763	50		
		D4	clip for	VN10KM	56		
		C1406	and	VN46AF	93		
		E2506	10	VN66AF	105		
		D1046	88	VN88AF	123		
		E1110	76	W02	25		

REGULATORS

				7818	40	7918	50
7805	40	7905	50	7824	40	7924	50
7806	40	7906	50	78L05	32	79L05	50
7808	40	7908	50	78L12	32	79L12	50
7812	40	7912	50	78L15	32	79L15	50
7815	40	7915	50	78L24	32	79L24	50

RF CHOKES

1, 1.5, 2.2 etc to 33μH	ea.	30p
47, 68, 100 etc to 680μH	ea.	33p
1000, 1500 etc to 4700μH	ea.	35p

PANEL LAMPS

LED chrome, red 54
LED yellow or green 70
(high efficiency)
Filament in red, amber, green or clear.
6V 60 mA 48
14V 40 mA 54

LED's
5mm red 10
yellow 19
green 16
Mountings, B65 3

DISPLAYS
7-segment
Common anode
MAN72A red 75
MAN82A yellow 110
MAN52A green 110
Common cathode
MAN74A red 85
MAN84A yellow 110
MAN54A green 110
5V filament
3015F 8 mA 256
3015F 15 mA 256

KNOBS

black plastic	K3 pointer 15
K1 skirted	K7 19mm
with spot 16	knurled 23
K2 as K1, 35mm 21	K8 as K7 + skirt 23

RECHARGEABLE CELLS

AA 104p C 249p
D (4AH) 414p
PP3 cell (7-2V)
PP3 charger 410p

CHARGERS

NC756 £5.59N
For any two pairs AA, C or D No
NC1230 £9.92N

POTENTIOMETERS

Carbon Rotary (P20) 100ohms 4M7 lin 220ohms 2M2 log 32p each w switch 87p. Dual gang (JP20) 4K7 1M2 lin or log 96p w switch £1.50

SLIDERS
58mm, low cost 10K 1M log only 29p. Std 58mm mono 4K7 1M lin or log 74p stereo matched £1.25. Graduated bezels 34p each

PRESET
Min. 10mm dia. Horiz or Vert 100ohms 1M 13p
Preset Cermet rectilinear type 89P 100ohm 1m £1.06 each
Preset Cermet 10mm dia. Horiz or Vert 100ohm 29p
Plessey MPW 1 moulded carbon 47ohms 2M2 59p each

SOLDERING IRONS

Also large stocks of bits, desoldering devices, accessories, etc
ANTEX C 240V £4.60N; X 25-240V £4.70N; CSBP £5.45N; XSBP £5.56N; ST4 Stand £1.70N
ORYX 50 watt temp controlled £15.50N
SOLDER 500gm/18SWG £7.60N; Desolder braid 1.5m 54p

SWITCHES

Type CK 1P 12 way, 2P 6 way, 3P 4 way, 4P 3 way 48p; Min Toggles S7101 SPDT 57p; S7201 DPDT 80p; S7301 3PDT £1.64; S7203 DPDT 96p; Push Button min 8531 make/8533 break 62p; 8225 DPDT £1.34.
DUAL IN LINE ERG colour coded 0.3" × 0.1" format. On/Off single throw 2P SDS2 54p; 4P SDS4 95; 6P SDS6 £1.38; 8P SDS8 £1.87; 10P SDS0 £2.10. Low cost D.I.L 4P DNS04 65p; DNS08 £1.00

LATEST PRICE LIST includes many new additions to items in our catalogue. Large S.A.E. brings price list FREE.
CATALOGUE incl 70p refundable voucher, 70p post free U.K. with price list.

RESISTORS

1/4, 1/3, 1/2, 3/4 watt all 2p each, 10 of one value 15p
2% Mullard metal film 5.1 ohms 300K 5p each, 10 of one value 40p
5% wire wound 3W or 7W most E12 values 1.2ohms to 8K2 9p each 10 for 70pN

CREDIT CARD ORDERS can be accepted via Mail Order or Telephone. Giro A/c no. 38/671/4002

VAT additional at 15% on all UK orders
FREE POSTAGE and packing on UK C.W.O. orders value £5.75 (inc VAT) and upwards. Under £5.75 add 40p (inc VAT)
DISCOUNTS on orders over £23.00 5%
£257.50 10%

Not applicable to 'Net' items (shown by 'N' after price) or to orders paid for by credit cards

PLEASE MENTION THIS JOURNAL WHEN ORDERING OR WRITING IN TO US

ELECTROVALUE LTD

Head Office, Mail Order Dept and Shop
28D St. Judes Road, Englefield Green, Egham, Surrey TW20 0HB Telephone Egham (STD 0784: London 87) 33603; Telex 264475

Also in Manchester for personal shoppers at
680 Burnage Lane, Burnage, Manchester M19 1NA
Telephone 061-432 4945

EV Computing Shop
700 Burnage Lane, Manchester Telephone 061-431 4866

EXPANDED ADD-ON KEYBOARD *for the* ZX81

BY J. M. STEJSKAL

THIS project describes the circuitry and its construction for extending the ZX81 add-on keyboard to provide a number of single stroke entry functions. These functions would normally be entered using SHIFT with another key. For example, to enter TO, SHIFT is held down while 4 is pressed.

The add-on keyboard seen here is that available from Redditch Electronics. We expect that the additions described here will be suitable for use with keyboards from other suppliers. We have not tried these, however.

Since the ZX81 user is no longer obliged to hold down the SHIFT key for much of the time, the typing becomes more comfortable and speedier with these additions.

ZX81 KEYBOARD

The relevant section of the ZX81 keyboard circuit is shown in Fig. 1. The 40 key-switch positions are arranged on a 5 × 8 grid. There is no contact between column and row until the key at their intersection is pressed. When doing this the information on the column line is transferred to the appropriate row line(s).

The ZX81 keyboard routine uses the upper half of the CPU address bus to repeatedly shift a logic 0 along address lines A8 to A15. This strobing happens very rapidly. The information appearing on the KBD bus (0 to 4) when a key is pressed tells the system which key has been pressed. If no key has been pressed, all logic 1's are on the bus resulting from the 10kΩ pull-up resistors to +5V.

If, say, the "1" key is pressed, then when A11 next goes low, KBD0 will also go low with the remainder of this bus staying high. This information is read into ICA by a scanning routine and the pressed key determined.

How the low gets on the KBD line happens in the following way. When the address line goes low, and the key makes contact, a series circuit across the +5V and logic 0 is made with one of the 10kΩ resistors and the diode. It is the junction of these two components which is read on the KBD line. Since the forward drop across a diode such as those in the ZX81 is about 0·7V, it is below the logic 1 threshold and is thus read as a 0 as required.

CIRCUIT DESCRIPTION

The complete circuit diagram for the Expanded Add-On Keyboard for ZX81 is shown in Fig. 2. There are three different circuit configurations according to the position of the switch on the keyboard matrix, see Fig. 1. The add-on keyboard is in parallel with this using KBD0 to KBD4 and A8 to A15.

Fig. 2 (opposite). The complete circuit diagram for the extra keys to be fitted to the proprietary add-on keyboard.

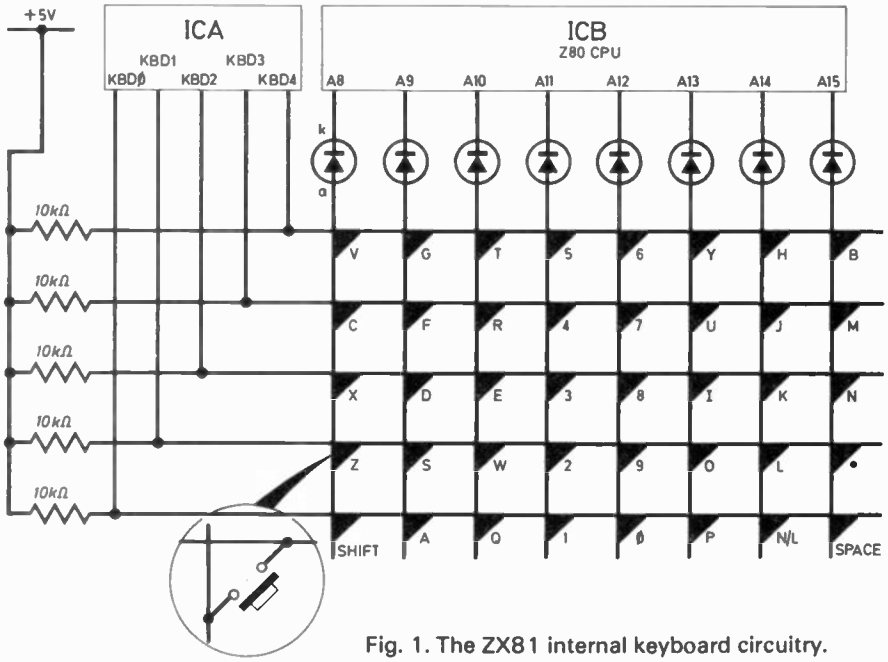

Fig. 1. The ZX81 internal keyboard circuitry.

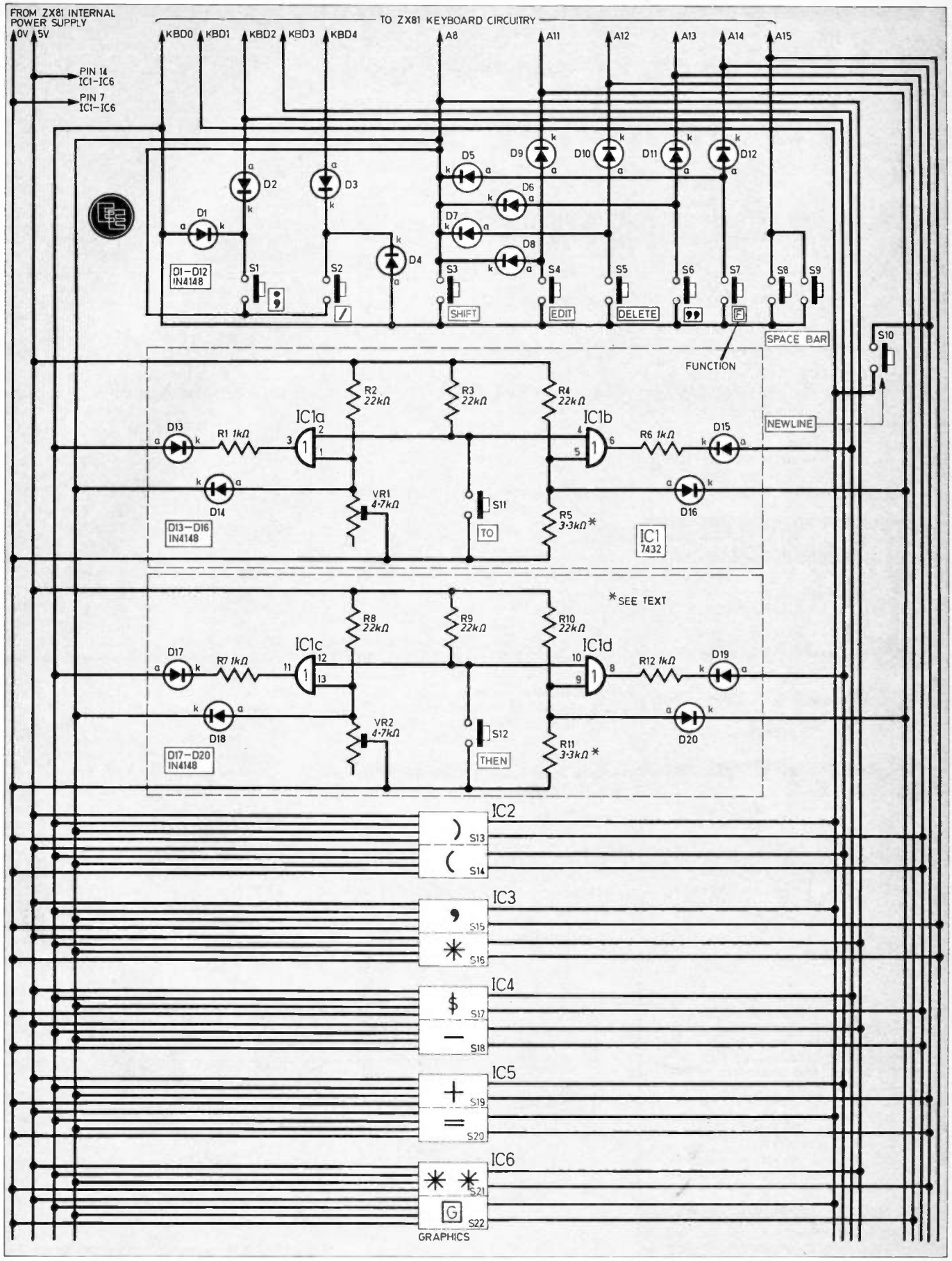
FROM ZX81 INTERNAL POWER SUPPLY
0V 5V
PIN 14 IC1–IC6
PIN 7 IC1–IC6
TO ZX81 KEYBOARD CIRCUITRY
KBD0 KBD1 KBD2 KBD3 KBD4 A8 A11 A12 A13 A14 A15
D1–D12 IN4148
SHIFT
EDIT
DELETE
SPACE BAR
FUNCTION
NEWLINE
IC1a
IC1b
IC1c
IC1d
IC1 7432
R1 1kΩ
R2 22kΩ
R3 22kΩ
R4 22kΩ
R5 3·3kΩ*
R6 1kΩ
R7 1kΩ
R8 22kΩ
R9 22kΩ
R10 22kΩ
R11 3·3kΩ*
R12 1kΩ
VR1 4·7kΩ
VR2 4·7kΩ
D13–D16 IN4148
D17–D20 IN4148
TO
THEN
*SEE TEXT
IC2
IC3
IC4
IC5
IC6
GRAPHICS

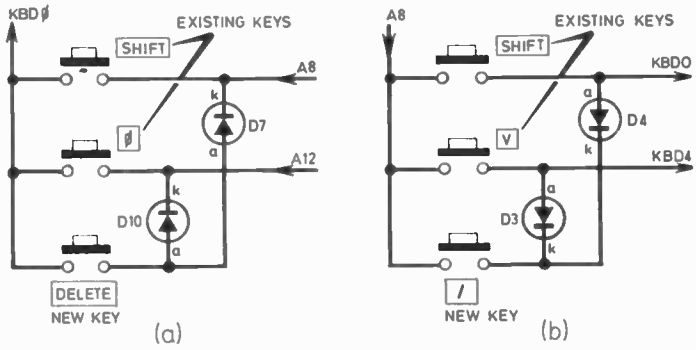

Fig. 3. Two of the three different switch-circuits used in the design, re-drawn for clarity.

The operation of two of these three different circuit arrangements is best explained by means of the re-drawn sections in Fig. 3.

The circuit in Fig. 3a is for use with any, or all, characters on line KBD0 which connects them to the SHIFT key, but where their address lines are different.

COMPONENTS

Resistors

R1,R6,R7, R12	1kΩ (6 off each)
R2,R3,R4, R8,R9,R10	22kΩ (6 off each)
R5,R11	3·3kΩ (6 off each)

All ¼W or ⅛W carbon ±5%

Potentiometers

VR1,VR2	4·7kΩ sub-miniature vertical skeleton presets (6 off each)

Semiconductors

D1–D12	1N4148, 1N914 or similar switching diodes (12 off)
D13–D20	1N4148 or similar (12 off each)
IC1–IC6	7432 TTL Quad 2-input OR gates (6 off)

Miscellaneous

S1–S22	p.c.b. mounting momentary action push-to-make keyboard switch (22 off)

Verostrip: 64 strips, 36 strips (2 off); fibre glass board (uncoppered, for board D) size 207 × 30mm; top caps for above switches: single (18 off), double (2 off), treble (1 off, or separate space bar, see text); 14-pin d.i.l. i.c. sockets (6 off); lightweight stranded p.v.c. covered wire—selection of colours; metal for brackets and fixing hardware as required.

Approx. cost Guidance only £17.50

The characters that can be used with this circuit are: A,Q,1,0,P,NEWLINE, SPACE. The following are used here: 1(EDIT), θ(RUBOUT), P(''), NEWLINE(FUNCTION). As an example, Fig. 3a shows the circuit for the DELETE key. Both switches, SHIFT and 0, work independently as before, the two diodes D7 and D10 preventing any interconnections between the two. When the commoning key DELETE (RUBOUT) is pressed, then the logic levels on A8 and A12 are successively passed to KBD0, thus producing the same effect as a "SHIFTed 1", that is, DELETE.

As already mentioned, only the frequently used characters have been selected here: EDIT, DELETE, ", FUNCTION (F). Although there is no special arrangement for any delay, the SHIFT always comes on first, without fail, making the circuit reliable and cheap.

The other circuit, in Fig. 3b, is suitable for keys: Z(:), X(;), C(?) and V(/). Two of these have been selected here: X(;) and V(/). The example shown is for the division sign "/".

The circuit in Fig. 3(b) is similar to that in (a) but this time it is the address line which is common to two keyboard lines: A8 is commoneed with SHIFT and V to realise /. If when / is pressed, a logic low is placed on A8 it will be transferred to both KBD0 and KBD4 which is the required condition for SHIFTed V.

Three of the extra key-switches are connected in parallel with existing keys, moving them to more convenient positions. Like all other extra keys, they can still be used in their original position. They are: SHIFT on the right-hand side of the keyboard, SPACE on a long space-bar and NEWLINE at the bottom left-hand corner. The space-bar shown here is from an old ASCII keyboard and is fitted with a key-switch at each end.

Although the remaining 28 key-switches do not have a common line with SHIFT key, all or any may be connected for single shifted-key operation by using a pair of logic gates for each function. Twelve keys were selected to appear on the prototype keyboard, any of which may be substituted by those of the constructor's choice. The twelve are: 4(TO), 3(THEN), 0()), I(( ), .(,), B(*), U( ), J(–), K(+), L(=), H(**) 9 (GRAPHICS) G.

Two separate sections to produce TO and THEN are shown in detail in Fig 2. Each is made up from two OR gates and are seen to be identical.

The components in the other circuits are identical, the only difference being that the b and d gates in each pair of gates might be connected to a different KBD-line and/or A-line. One gate in every pair operates the SHIFT. VR1 and R5 arrange the delay required for SHIFT to operate first.

With S11 not pressed, a logic high (1) reaches one input of each of the two OR gates IC1a and IC1b causing each output to be at logic 1. The other input to each gate is held at logic 0 by the potential divide effect of R2/VR1 and R4/R5. When S11 is pressed the outputs of IC1a and IC1b drop to logic 0.

Now each keyboard line is strapped to +5V by its own resistor (in the ZX81). The ZX81 internal circuitry looks for a logic 0 appearing on one of the lines at the appropriate time when being strobed by A8 to A15 outputs. When the output of IC1 goes low, a low is read in on KBD0. This, together with the low logic reaching A8 from pin 1, simulates SHIFT being pressed. IC1b goes low also at the same time, with a logic 0 being placed on KBD3 and A11. The values of VR1 and R5 are chosen so that SHIFT acts before 3, giving SHIFTed 3. This is TO, the required result. **(To be continued)**

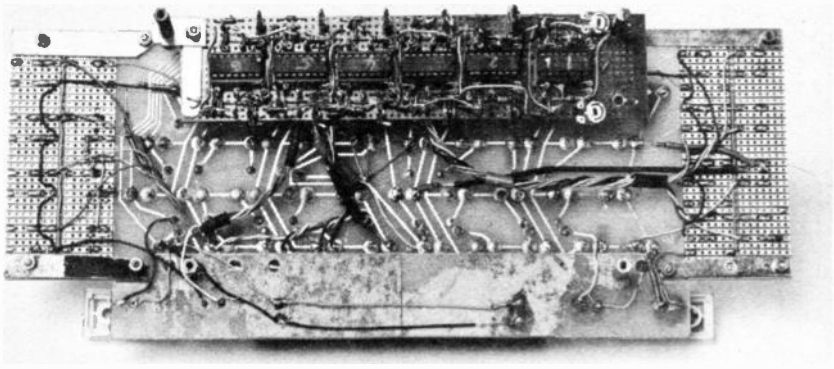

CIRCUIT EXCHANGE

This is the spot where readers pass on to fellow enthusiasts useful and interesting circuits they have themselves devised.

Payment is made for all circuits published in this feature.

Contributions should be accompanied by a letter stating that the circuit idea offered is wholly or in significant part the original work of the sender and that it has not been offered for publication elsewhere.

REAR-LIGHT FAILURE INDICATOR

THE question of whether or not the rear light is working is a constant worry for cyclists riding at night.

This simple circuit lights an l.e.d. if the rear-light battery is flat. The circuit uses the front-light battery as the power source for the l.e.d., and the l.e.d. is mounted on the steering column of the cycle. If the rear-light battery is flat there is a potential difference across the l.e.d. and it will

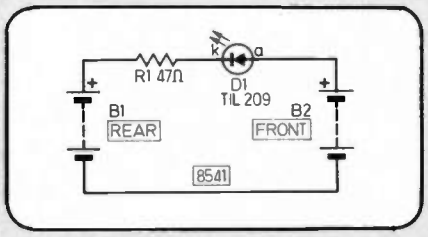

glow, informing the cyclist of the urgent need to change the battery.

Andrew Marshall,
Old Basford,
Nottingham.

QUICK POLARITY TESTER

IN THE prototype of the Quick Polarity Tester the connections to the battery were for negative earth vehicles, as shown in the circuit diagram, but for positive earth vehicles the connections to the battery *must* be reversed.

To test this, connect up the battery terminals to the car cigarette lighter (+ to pin, – to chassis). It was found best to use "Christmas Tree" bulbs as these were small, although other bulbs could be used.

Alexis Landa,
Ilfracombe,
Devon.

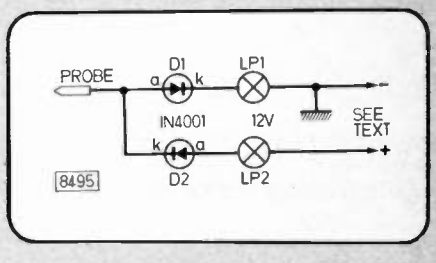

SPEED CHESS AND DRAUGHTS TIMER

Stimulated by the Lightning Chess Buzzer featured in an earlier issue of *EE*, I have designed another timer based on the 4017 CMOS chip.

A NAND gate oscillator formed by IC1a and IC1b feeds the clock of the decade counter IC2. This causes the line of l.e.d.s D1 to D10 to light in sequence unless the reset switch S1 is operated.

If a player fails to complete his move within the time set by potentiometer VR1 then the yellow l.e.d. D10 will light and an alarm will sound. This alarm is triggered by the oscillator IC1c/IC1d and indicates a time fault.

As shown, the maximum time is adjustable up to 15 seconds, by increasing the value of C2 the time maximum may be increased in proportion.

Andrew Knight,
Langley,
Southampton.

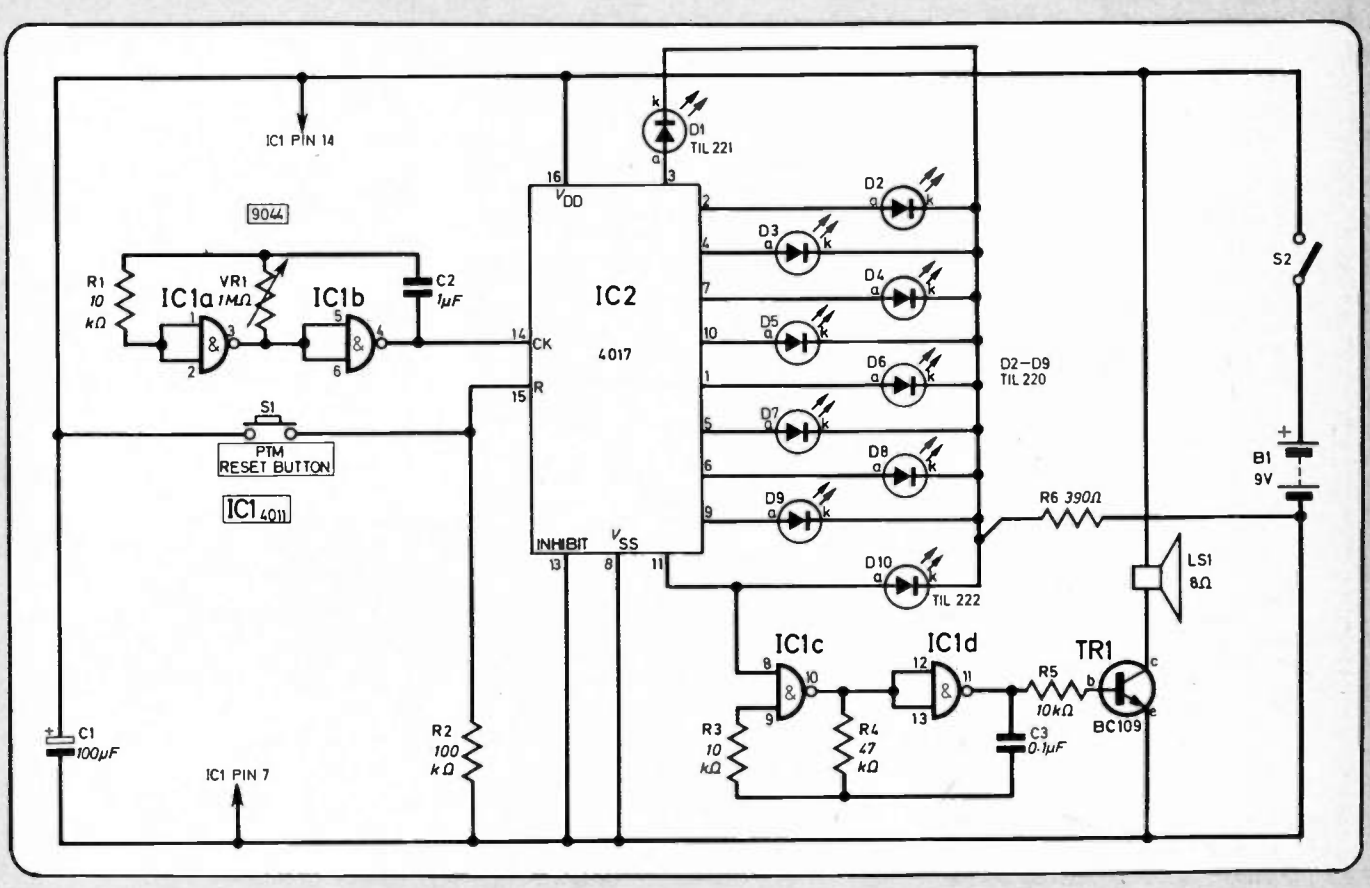

ACORN ATOM

A USER'S REPORT

BY T. J. JOHNSON

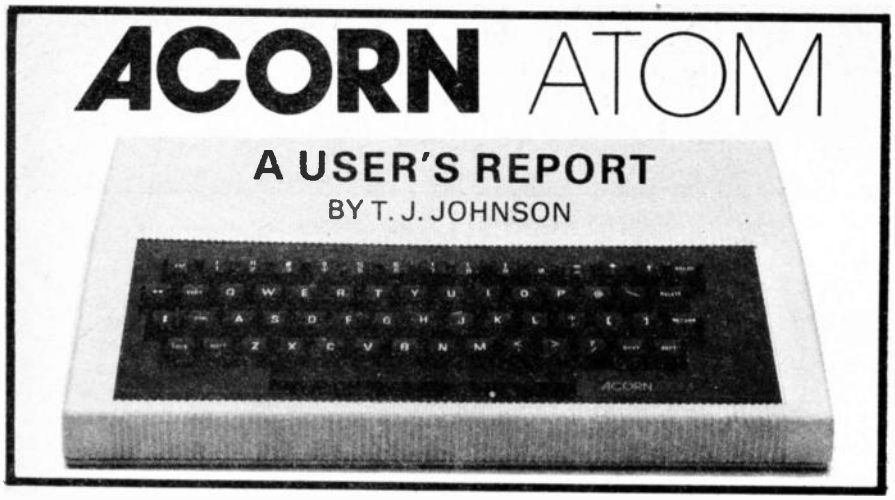

THERE are two basic versions of the Acorn Atom home computer and both are available as kits or ready made. The first, commonly referred to as the "minimum" system, has 8K of ROM and 2K of RAM. The second, often called the "expanded" system, has 12K of ROM and 12K of RAM. The one point to note is that the expanded system has the optional floating point ROM fitted—a most valuable addition.

I purchased the minimum system in kit form for really only one reason, and that was to save money. I found that there was nothing particularly instructive about constructing the kit, so unless you have very shallow pockets it is better to purchase the assembled and tested version.

THE KIT

The Atom kit comes complete with concise and very compact assembly instructions, and was obviously written with the more experienced constructor in mind. Although the kit is remarkably easy to construct, it is definitely not recommended for beginners who lack experience in soldering.

I experienced no great difficulties in assembling the kit, and found that the Atom was complete and ready for use in a little over three hours. The one frustrating moment came when fitting the keyboard.

The construction of the keyboard is such that you have to insert the fine gold-plated contact wires (over 100!) into the large diameter p.c.b. holes. This may sound easy but it can prove frustrating, especially when you think you have the keyboard fitted and are just about to solder the wires to the p.c.b., then you discover that a single contact wire has become trapped under the keyboard, with the result that you have to remove it and start all over again. This is the one major criticism I have with the kit.

A short lead also needs to be made which connects the Atom cassette interface socket with your recorder. The manual shows the required connections for the Atom end. For the recorder end you should either refer to its manual and/or solve the connections by trial and error.

When trying out the Atom for the first time, be sure to check each key, and every key, in turn. I found when power was first applied that, whichever key I pressed the figure "8" appeared on the VDU. After much fault-tracing it turned out to be the "8" key at fault with a permanent short across it. The fault was cleared, of course, but it does illustrate the point earlier about the difficulty of fitting the keyboard.

EXPANSION

The expandability of the Atom is perhaps one of its major assets. The minimum system can be expanded in a variety of ways. For example: by adding extra RAM—here 10K may be fitted on the board with a further 64K as an additional "card"; a colour encorder card and extra ROM in the form of two further i.c.s. All these additions may be mounted inside the case of the Atom.

The usual printer and floppy discs may also be connected to the Atom by way of the various expansion sockets on the rear. These expansion sockets also carry the Address, Data and Control lines of the CPU as well as various control signals which may be used for further expansion, for example, extra RAM and ROM.

[The Atom is also equipped with latched ports. These have been employed in the design of an Eprom Programmer, see page 178].

CASSETTE FILING

The cassette operating system of the Atom is exceptionally good, despite its very slow transfer rate of 300 bits per second, when compared with other machines. I use a Ferguson model 3240 recorder of some 10 years vintage and well-worn heads, and apart from the initial troubles when first setting the system up, have experienced no difficulties in saving or loading programs on tape.

The cassette operating system is very tolerant of input/output levels from the recorder and thus probably makes it one of the better systems available.

THE LANGUAGE

The language used on the Acorn Atom is of course Basic—with a few variations on the "standard" Basic.

It would be impracticable in a short report such as this to list all the variations, and in the long run it would be of no practical use, unless you intend to translate one form of Basic program to another. If you have some sort of electronics background or a logical mind you should have no trouble in getting to grips with the language. I will confess that before I bought the Atom I had no previous knowledge of Basic apart from the many programs I had seen in magazines. Providing you have had a similar experience it will not be difficult to progress through the Basic manual supplied with the unit.

Possibly one area of programming which is difficult to understand is Assembler Programming using mnemonics. The Atom manual gives an introduction to assembler programming, but from my point of view is very lacking in detailed explanations of the various instructions.

GRAPHICS

Most home computers have some form of graphics capabilities, either black and white and/or colour. The Atom has both, providing the colour encoder card is used. In its lowest graphics mode the resolution is 64 × 48 pixels and in the highest mode is 256 × 192 pixels (slightly lower when colour is used).

I found the graphics quite difficult to grasp at first, particularly the fifteen PLOT commands, and also when incorporating these instructions in a games program. The graphics are, however, very good and should not prove difficult after a certain amount of practice.

It is worthwhile to point out that the VDU is memory mapped, that is, each of the 512 points on the screen may be POKED with any desired character, thus providing an additional graphics mode.

CONCLUSIONS

Obviously, since this is the first and only home computer I am likely to buy, I am slightly biased in favour of the Atom.

Since owning the Atom for some 12 months, I have had the opportunity to try several other machines, both "home" types and "commercial" types of computer. In nearly every case, I prefer the Atom for its simplicity and ease of use.

I believe the computing power of the Atom is somewhat under-estimated and consider the Atom a most worthwhile investment. It is very simple to use, its language is easy to learn, and it is very easily expandable. For a relatively small outlay I have a very powerful computing machine that I do not consider will be obsolete in ten years' time. □

Step-by-step fully illustrated assembly and fitting instructions are included together with circuit descriptions. Highest quality components are used throughout.

Sparkrite

BRANDLEADING ELECTRONICS

NOW AVAILABLE IN KIT FORM

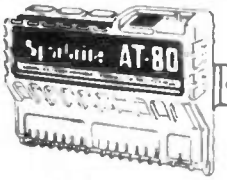

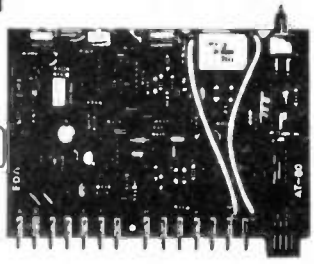

AT-80
Electronic Car Security System

- Arms doors, boot, bonnet and has security loop to protect fog/spot lamps, radio/tape, CB equipment
- Programmable personal code entry system
- Armed and disarmed from outside vehicle using a special magnetic key fob against a windscreen sensor pad adhered to the inside of the screen ● Fits all 12V neg earth vehicles
- Over 250 components to assemble

VOYAGER Car Drive Computer

● A most sophisticated accessory ● Utilises a single chip mask programmed microprocessor incorporating a unique programme designed by EDA Sparkrite Ltd ● Affords 12 functions centred on Fuel, Speed, Distance and Time ● Visual and Audible alarms warning of Excess Speed, Frost/Ice, Lights-left-on ● Facility to operate LOG and TRIP functions independently or synchronously ● Large 10mm high 400ft-L fluorescent display with auto intensity ● Unique speed and fuel transducers giving a programmed accuracy of + or — 1% ● Large LOG & TRIP memories 2,000 miles 180 gallons 100 hours ● Full Imperial and Metric calibrations ● Over 300 components to assemble
A real challenge for the electronics enthusiast!

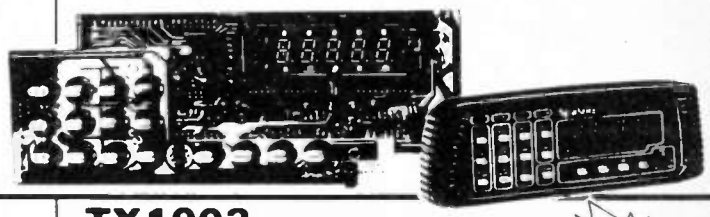

SX1000
Electronic Ignition

- Inductive Discharge
- Extended coil energy storage circuit
- Contact breaker driven
- Three position changeover switch
- Over 65 components to assemble
- Patented clip-to-coil fitting
- Fits all 12v neg. earth vehicles

TX1002
Electronic Ignition

● Contactless or contact triggered
● Extended coil energy storage circuit
● Inductive Discharge ● Three position changeover switch ● Distributor triggerhead adaptors included ● Die cast weatherproof case ● Clip-to-coil or remote mounting facility ● Fits majority of 4 & 6 cyl. 12V. neg. earth vehicles ● Over 145 components to assemble.

NEW

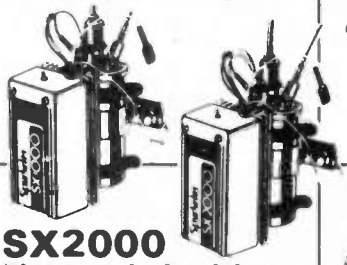

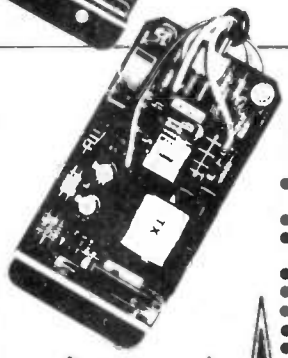

SX2000
Electronic Ignition

- The brandleading system on the market today
- Unique Reactive Discharge
- Combined Inductive and Capacitive Discharge
- Contact breaker driven
- Three position changeover switch
- Over 130 components to assemble
- Patented clip-to-coil fitting
- Fits all 12v neg. earth vehicles

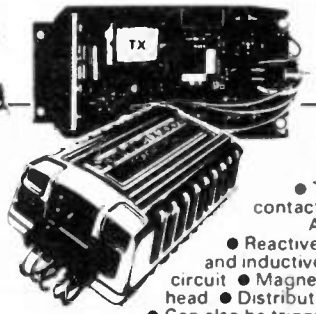

TX2002
Electronic Ignition

● The ultimate system ● Switchable contactless ● Three position switch with Auxiliary back-up inductive circuit ● Reactive Discharge Combined capacitive and inductive ● Extended coil energy storage circuit ● Magnetic contactless distributor trigger head ● Distributor triggerhead adaptors included ● Can also be triggered by existing contact breakers ● Die cast waterproof case with clip-to-coil fitting ● Fits majority of 4 and 6 cylinder 12v neg. earth vehicles ● Over 150 components to assemble

All SPARKRITE products and designs are fully covered by one or more World Patents

SPECIAL OFFER
"FREE" MAGIDICE KIT WITH ALL ORDERS OVER £45·00

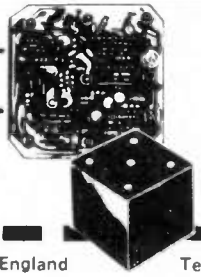

MAGIDICE
Electronic Dice

- Not an auto item but great fun for the family
- Total random selection
- Triggered by waving of hand over dice
- Bleeps and flashes during a 4 second tumble sequence
- Throw displayed for 10 seconds
- Auto display of last throw 1 second in 5
- Muting and Off switch on base
- Hours of continuous use from PP7 battery
- Over 100 components to assemble

SPARKRITE 82 Bath Street, Walsall, West Midlands, WS1 3DE England Tel: (0922) 614791 *Allow 28 days for delivery*

	SELF ASSEMBLY KIT
SX 1000	£12.95
SX 2000	£19.95
TX 1002	£22.95
TX 2002	£32.95
AT 80	£32.95
VOYAGER	£64.95
MAGIDICE	£9.95

PRICES INC. VAT, POSTAGE & PACKING

NAME _____ EE
ADDRESS _____

I ENCLOSE CHEQUE(S)/POSTAL ORDERS FOR
£ _____ KIT REF _____
CHEQUE NO _____

PHONE YOUR ORDER WITH BARCLAYCARD VISA
SEND ONLY SAE IF BROCHURE IS REQUIRED

BRANDLEADING BRITISH ELECTRONICS

CUT OUT THE COUPON NOW!

Everyday News

PERSONAL PAYPHONE

MANY small businesses would like to provide their customers or staff with a payphone service, but the current wall-mounted model may not suit their particular situation. Now, British Telecom have introduced a push-button payphone only nine inches square and seven inches high and weighing less than 7lb that also doubles as a private phone.

Called the Payphone 100, it can be left permanently coin-operated or, at the turn of a key, switched from a payphone to an ordinary phone and back again. When used as a payphone it accepts 2p, 5p, 10p and 50p coins and will refund unused coins at the end of a call.

The table-top payphone is particularly useful for small businesses who want to provide their customers or visitors with the use of a phone but who do not want to give away free calls. Typical users will be hairdressers, pubs, clubs, wine bars, garages, surgeries and shops. Another possibility could be for the person who has a "friendly neighbour".

Designed for use with the new socket system, it is ideal for those businesses who have only one telephone line. A single payphone allows this line to be used for both private and customer use.

When operating in the payphone mode, local trunk and international calls can be made but calls to or via the operator, except for 999 emergency calls, are not possible. When switched to "private" use all services are available.

Renters of the Payphone 100 will be billed for calls at the normal rate but people using the phone will have to insert coins at the higher coinbox rate. The renter retains the extra cash.

The user is warned of "credit expiry" by a flashing l.e.d. and a warning tone. A cash-box full sensor helps to prevent jammed coin slots.

The annual Leeds Electronics Show will take place from 5 to 7 July in the Departments of Electrical and Electronic Engineering, University of Leeds.

Training for the Micro

An advanced microprocessor training course, that can be used for "distance learning", has been developed at the IBA's Harman Engineering Training College, Seaton, Devon. The initial requirement was to provide theoretical and practical training for field engineers maintaining the microprocessor-based transmission equipment used in the new Regional Operations Centres and Channel 4 transmitting installations, including control and telemetry systems.

The programme is broken down into three stages: Microprocessor basics using a modified version of the M6800 D2 kit. Digital diagnostics for broadcast systems, including signature analysis. High-level language programming, using the Apple II microcomputer.

Inventer's Workshop

In a bid to attract local inventers with new ideas into the field of microelectronics, the Microelectronics Applications Research Institute (MARI), Newcastle upon Tyne, has set up a Microelectronics Innovation Workshop.

The innovation centre supports the use of the workshop and individuals are closely supervised by MARI staff. It is claimed that this facility is unique in that individuals receive assistance at the early stages of the invention which, at present, no other organisation provides. People can experiment and test their ideas without having to set up their own expensive production facilities, and at the same time attract customers or backers.

Japanese Buy British

Logic analysers made by British instrumentation specialists, Thandar Electronics, are being exported to Japan.

The initial order, worth £100,000, is claimed to represent a classic "reverse technology coup" for the St Ives, Huntingdon-based company which exports over 50 per cent of its output.

SHIP-SHAPE

A contract to provide a combined radar and electro-optic weapons control system, to be installed in one of the Royal New Zealand Navy's Leander Class Frigates, has been awarded to RCA Missile and Surface Radar.

This contract is part of plans to modernise and improve the Royal New Zealand Navy ships capabilities.

In addition to weapons control, the radar can be used for navigation, surveillance, aircraft control, drone control, and in search and rescue missions.

CLUB SPOT

The ACC National Prestel Committee, acting in its role as the national body representing the computer hobbyist, has linked up with Micronet 800 to create Club Spot 800, a new service to involve ordinary computer enthusiasts in Prestel editing.

Club Spot 800 will contain news and ideas about micros and micro clubs, plus programs, sales and wants, and general views.

To introduce the new service a conference is being held on February 26, starting at 2pm, at the Institute of Grocery Distribution, Grange Lane, Letchmore Heath, Watford. Registration is free in advance or £5 for those turning up on the day (subject to space being available).

For more details contact: R. Steele, ACC National Prestel Committee Secretary, St John's College, Oxford OX1 3JP.

● The Pontefract & District Amateur Radio Society is holding its annual "Component Fair" on Sunday, March 13, at the Carleton Grange Community Centre, Carleton, Pontefract. Time: 11am to 4.30pm (10.30am for the disabled).

For more information contact: Mr P. N. Butterfield, G4AAQ, Pontefract & District ARS, 43 Lynwood Crescent, Pontefract WF8 3QT.

ANALYSIS

BELTS AND BRACES

When the first experimental communications satellites, *Telstar* and *Relay*, flew into orbit in 1962 many experts forecasted that the days of submarine cable in international traffic were numbered. When, three years later, *Early Bird* was launched into geostationary orbit 23,000 miles out in space earlier fears seemed confirmed. The submarine cable was doomed.

What a pity, we thought, so soon after the big technological breakthrough in 1956, the year when repeater technology had improved to the point when it was possible to use telephony by cable across the Atlantic Ocean, 90 years after the laying of the first successful transatlantic telegraph cable.

And yet here we are in 1983, two decades after *Telstar*, with more submarine cables than ever and new ones being laid on the ocean beds every year. What the experts didn't see was that a mature technology was still capable of "stretch". Or that new, however exciting at first sight, is not necessarily better or even cheaper.

Two main developments saved the submarine cable from extinction. One was the development of solid-state wide-band repeaters which enabled many more simultaneous telephone conversations. Thus, in a single decade, cost per telephone channel fell by a factor of 20. The other was the phenomenal growth of world telecommunications traffic now shared by both cable and satellite.

A political factor, not to be ignored, is that communications satellites are vulnerable to destruction by killer satellites which, for all we know, may already be deployed ready for action. Safety lies in both belts and braces to keep our communications trousers up, with terrestrial h.f. radio as an emergency piece of string in our pocket should belts and braces be shot away.

While cable has not only miraculously survived but actually flourished it is to have a change of character. Next year a UK-Netherlands cable will be completed at a cost of £85 million. It will carry 4200 simultaneous telephone conversations to bring the southern North Sea network to a total capacity of some 14,000 circuits. It will be the most up-to-date in the world.

But it is also expected to be the last of its type to find a land-fall in the UK, using analogue speech over wires. All subsequent submarine cables, say British Telecom, are being planned to use digital speech transmitted through optical fibre. This doesn't mean a threat to satellites. Both systems are needed and can live happily side-by-side, belted and braced in mutual support.

Brian G. Peck

INFORMATION DEGREE

British Telecom is to help two Universities produce information technology experts who will run the advanced telecommunications systems of tomorrow.

In partnership with the Universities of Aston and York, British Telecom will develop new degree courses for training 60 students to become electronic engineers with skills in telecommunications and computing.

British Telecom will pay the Universities £100,000 a year for new equipment and additional teaching staff. This support will be guaranteed for five years.

Most of the places on the courses will go to school-leavers with good "A" level grades, but some may be given to suitably qualified technicians already in Telecom's employment. The new courses will begin in 1984.

Lord of the Spectrum

The Hobbit, a full-colour adventure simulation based on J. R. R. Tolkien's fantasy land, is amongst new software for the ZX Spectrum and ZX81 personal computers announced by Sinclair Research.

The player assumes the role of Bilbo and undertakes a series of adventures in which he will meet and interact with all the novel's other leading characters. Depending on his decisions each game will develop differently.

Compiled by Melbourne House to use the full potential of the 48K Spectrum, features include original artist-designed graphics and a built-in 500 word "inglish" vocabulary to instruct the computer. The package, price £14.95, comes complete with a copy of the novel.

JUST THE TICKET

Government approval of British Rail's plans to invest £21 million in new ticket issuing machines will soon bring BR's ticket offices into the micro age. Up to £17 million of the investment is for a new all-purpose ticket issuing system and the remaining £4 million is for PORTIS, a portable version of the main system for use by guards on pay trains.

Subject to satisfactory evaluation of the prototypes, the new machines should come into operation in mid-1984 and be fully established by the middle of 1986.

ORIC GOES INTO PRODUCTION

A new computer named Oric I has just gone into mass production. Over 250,000 of these machines are expected to be sold in its first year. Its market will be that at present enjoyed by the ZX Spectrum and will be the first competitor to a Sinclair computer.

Based on our impressions of a pre-production model we received, the company responsible for the Oric, **Oric Products International Ltd.** have a machine to be proud of in both appearance and performance.

The computer is equipped with a unique type of keyboard with space bar forming one of the 57 positive action keys on a qwerty arrangement, extensive colour, music and sound effects capabilities.

There is an r.g.b. output as well as u.h.f. The cassette tape in/out runs at 2400 Baud (!!!). There is access to the bus at the rear of the computer and an output suitable for driving a Centronics-type interface. Available with 16K and 48K RAM. A **Technical Review of Oric I will appear shortly in EE.**

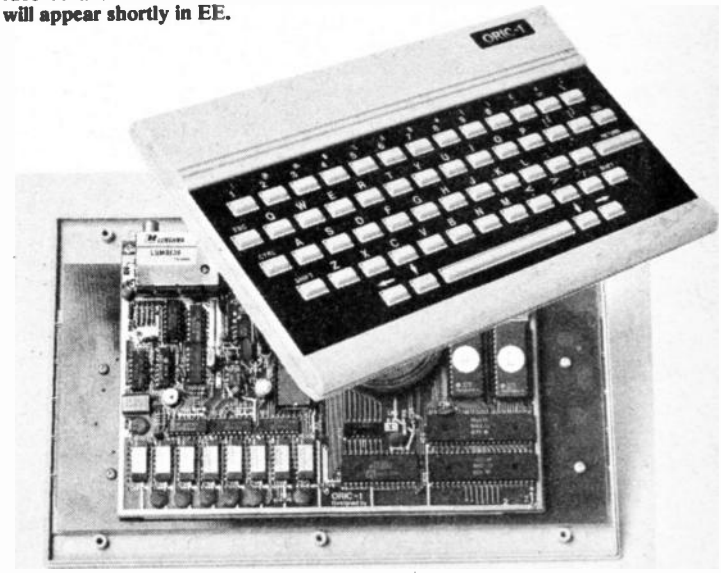

EPROM PROGRAMMER FOR THE ACORN ATOM

PART TWO **BY D. C. GRINDROD**

THE second and final part of this project deals with the construction, software and testing.

CIRCUIT BOARDS

Two circuit boards are used in the construction of the Eprom Programmer, one to hold the power supply components and the other for the EPROM socket and d.i.l. connection sockets for connecting to the Atom.

Begin with the power supply board, this is shown in Fig. 3. The layout of the components on the topside is shown together with the breaks to be made on the underside. The prototype used a p.c.b. mounting type transformer. If this is not available, a chassis mounting type may be used, suitably positioned on the case with its leads connected to T1 fixing location as shown.

Make the required breaks in the copper strips and then solder the components in place as shown in Fig. 3. The leads on the i.c.s need to be formed to fit the board.

A small piece of adhesive paper stuck to the board should be used to identify the pins on *PL6*. If the voltages become transposed, then the EPROM would become permanently damaged.

When you are satisfied that all components are correctly wired up the power supply board may be tested. Temporarily connect a mains cable and plug across the primary of T1. Set VR2 to its midway position.

Fix a length of 4-way ribbon cable to SK5. Label the positions of the individual sockets in SK5: 0V, 5V, 25V and *B* as appropriate. Plug into *PL6* on the board and with a voltmeter, check that the +5V supply is present. It may vary a little from +5V but should never exceed 5·25V else the EPROM will become damaged.

The 25V supply at this time should read between 15 and 30 volts. Adjust VR2 until the reading is 25 volts, exactly. Next adjust VR1 until the voltage at *B* is about 22 volts with respect to the 0V rail. It may be trimmed in later.

Since the 7805 regulator incurrs a 20V drop it will get hot. If the Eprom Programmer is expected to be in use for prolonged periods at a time the use of a heatsink is recommended or use a reduced secondary tapping such as 9V.

The topboard connects ports A, B and C to the EPROM socket and control switches.

Dual-in-line sockets were used for ports A and B due to their cheapness and reliability. A standard 5-way 270° DIN socket was used for port C. There is no reason why a different connector system could not be used.

The topboard is shown in Fig. 4. It has been drawn as in the prototype but a square piece of stripboard could be used.

In the prototype the SK5 was a 24-pin Zero Insertion Force (z.i.f.) socket. As its name implies it exerts no force on the pins of the EPROM being programmed or read. It drops into holes in the socket and moving the lever to a horizontal position causes the socket contacts to grip the EPROM pins. Move the lever to a vertical position to release the grip and allow the EPROM to be removed.

The z.i.f. socket was plugged into a low profile 24-pin socket soldered to the board, but it may be soldered to the board direct if desired.

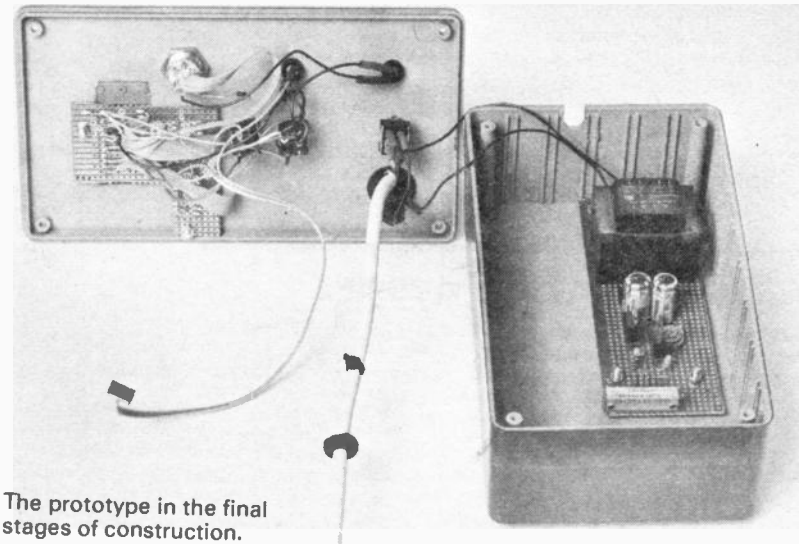

The prototype in the final stages of construction.

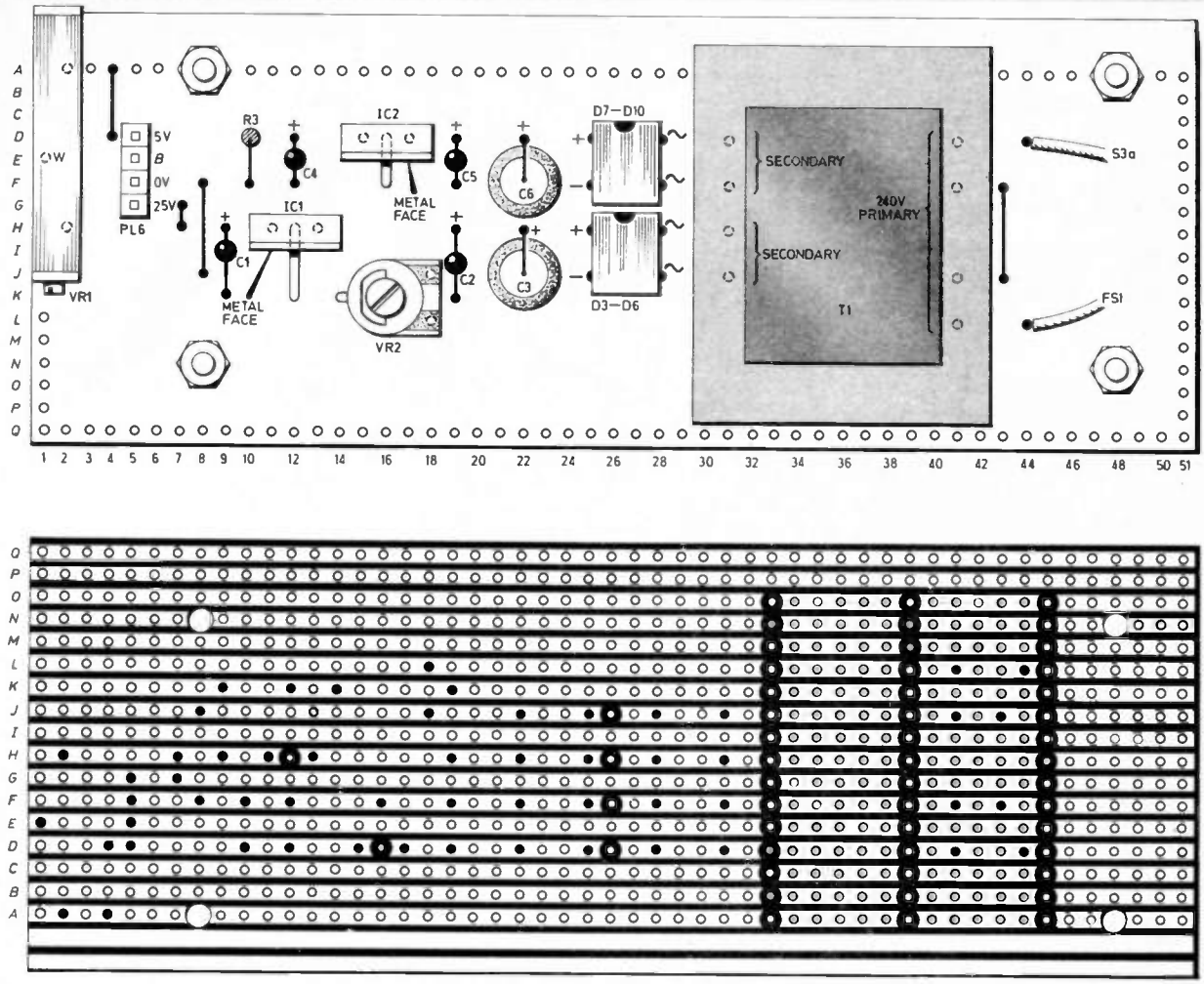

Fig. 3. The layout of the components for the power supply section of the Eprom Programmer and the breaks to be made on the copper side of the board, with drilling details.

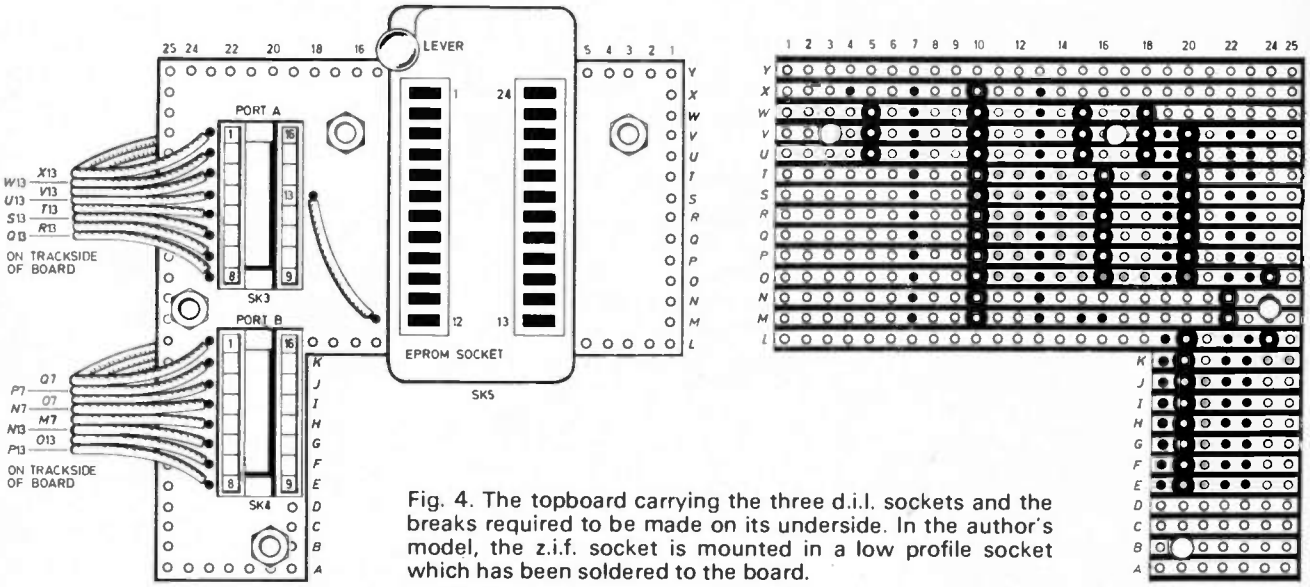

Fig. 4. The topboard carrying the three d.i.l. sockets and the breaks required to be made on its underside. In the author's model, the z.i.f. socket is mounted in a low profile socket which has been soldered to the board.

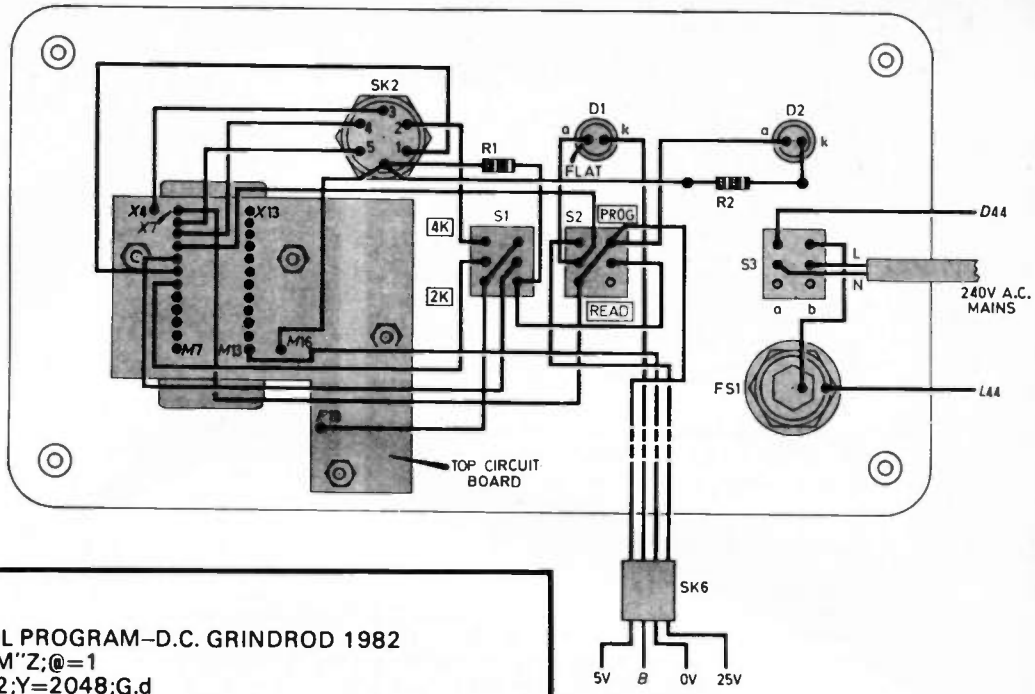

Fig. 5. Complete interwiring details and suggested component layout on the lid of the case.

PROGRAM A

```
 1 REM BASIC CONTROL PROGRAM–D.C. GRINDROD 1982
 2bIN. "2K OR 4K EPROM"Z;@=1
 3 IF Z=2 U=224;X=192;Y=2048;G.d
 4 IF Z=4 U=192;X=224;Y=4096;G.d
 5 G.b
 6d?£B80C=X;?£B802=255;?£B803=255
 7 P.$12, "SET SWITCHES TO PROGRAM AND "Z"K" '
10aIN. "RAM START ADDRESS"C,"RAM END ADDRESS"D
15 IF D–C+1>Y P. "PROGRAM EXCEEDS "Z"K.START AGAIN"; G.a
16 P. "PROGRAM LENGTH IS "D–C+1"BYTES" '
20cIN. "EPROM START ADDRESS"E
25 IF E+D–C+1>Y P. "PROGRAM WILL NOT FIT IN EPROM" ';G.c
26 P. "EPROM END ADDRESS" E+D–C
30 F=E&£FF;G=E&£FFFF/256
35 ?£B002=G
39 P. "PROGRAMMING STARTED" '
40 F.A=C TO D
50 ?£B801=f;?£B800=?A
53 ?£B80C=U;F.B=0 TO 109;N.;?£B80C=X
55 F=F+1
60 IF F=256 G=G+1;F=0;?£B002=G
70 N.
80 P.$11,"PROGRAMMING COMPLETE",
          $7,$7',"SET MODE SWITCH TO READ" '
90 E.
```

PROGRAM B

```
  1 DIM LL4
  2 F.D=0 to 4;LLD=–1;N
  5 F.X=1 TO 2
 10 P=£2890
 20(/FULLY RELOCATABLE M/C D.C. GRINDROD 1982
 30:LL4 LDX @192; LDY @0; LDA @255
 40 STX £B80C;STY £B802;STA £B803
 50 LDX £33D;LDY £33E;STX £B002
 60 STY £81;STX £83
 70 LDX £322;LDY £323
 80 LDA @0;STA £80
 90:LLO STX £B801
100 LDA £B800;STA (£80),Y
110 LDA £33F;CMP £83;BNE LL1;CPX £324;BEQ LL2
120:LL1 INX;INY;CPX @0;BNE LL3; INC £B002;INC £83
130:LL3 CPY @0;BNE LLO;INC £81
140 CLC;BCC LLO
150:LL2 RTS
160);N.
170 E.
```

Grey ribbon cable (Speedbloc cable) was used in preference to the "rainbow" type as it is lighter and more pliable.

TOP PANEL

First of all prepare the lid of the chosen case to accept the case mounted components. Make the cut-out to accommodate the z.i.f. socket. Fix all the components in place. Fit the board fixing screws to the case lid and hold in position with full nuts. These also act as spacers. Position and solder the sockets to the board, make the link wire connection on the board topside and then attach 120mm lengths of 8-way ribbon cable to the non-copper side as shown.

Now fit this board in place and secure. The remainder of the wiring to this board is soldered directly to the copper trackside of the board. The complete wiring of the panel mounted components is shown in Fig. 5. The wiring should all be carried out with p.v.c. covered lightweight wire. Note that R1 is directly wired between SK2 and S2, and R2 directly to the leg of D2. Sleeve all mains input connections for reasons of safety.

Do not attach the ribbon cable from the topside of the board to the underside until last. Carefully check all wiring and make sure there are no bridges across adjacent copper tracks. Attach SK6, check and label its connections.

LEAD SET

A set of leads need to be made up to connect the Eprom Programmer to the Atom. One will be terminated at one end with a 64-way (a+b) DIN indirect connector, with the other end fitted with two separate 14-pin d.i.l. header plugs.

The second lead will have a 7-way DIN plug at one end (Atom cassette port) and a 5-way DIN plug at the other to

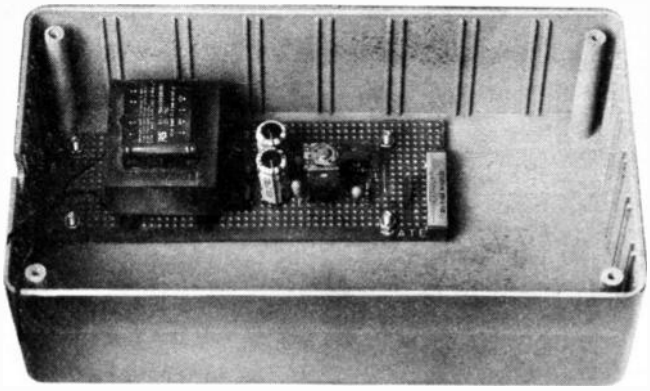

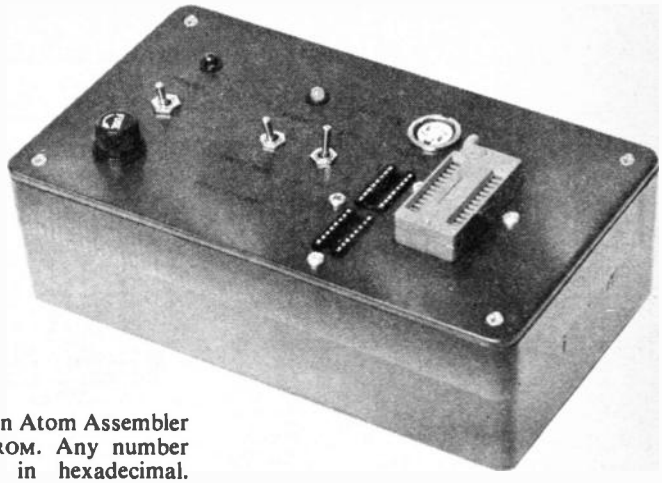

(Left). Early stage of assembly. Power supply board in position in base of case. (Above). The completed unit.

match with the socket on the Programmer. Full pinning details are provided in Fig. 2 to allow these leads to be constructed.

SETTING UP

The power supply board will not at this stage be mounted in the case. After all interconnections have been made check that there are no solder bridges between adjacent tracks on the upper circuit board.

Next check for continuity between the EPROM socket SK5 and the input sockets, SK2, SK3 and SK4. Check the routes for both positions of S1. Check also for continuity of the supply lines from SK6 to the SK5 positions pin 12, 21 and 24, for all combinations of S1 and S2. Remember that A11 floats for 2K EPROMs and that CB2 is on pin 18 for 2K types and pin 20 for 4K types.

Plug SK6 into *PL6*, plug the unit into the mains and switch on. The power on l.e.d. D2 should light up. The bi-coloured l.e.d. should be lit either red or green according to the setting of S2. Operate S2 and adjust VR1 until both green and red are of equal brightness. Check that the +5V rail is still within limits as VR1 does lift its level by 0·1V or so. If all is well, switch off at the mains and secure in the case.

Switch on again and check the power supply pins on SK5. You should read 5V (5·25V max.) between pins 24 and 12, and 25V between pins 21 and 12 for S2 in PROG mode and 5V when in the READ mode.

A final check should be made using an ohmmeter between adjacent pins on SK5. Shorted tracks on the data or address busses could cause the 6522 (VIA) or 8255 to source too much current and possibly become damaged.

It is good practice to leave the MODE switch in the READ position until the program wants it changed. This prevents any accidental programming by erroneous port values before they are initialised.

SOFTWARE

The software for the Eprom Programmer is in two parts: Program A, the control program in Basic for programming the EPROM; and Program B, a machine code program written in Atom Assembler form to read the EPROM. Any number prefixed by "£" is in hexadecimal. Characters in lower-case represent inverse video characters.

TESTING

Connect the Eprom Programmer to the Atom and switch on the latter. The computer should function normally. Turn on the Programmer.

First of all load the byte £AA into RAM at say £8200, then enter the Basic control program, Program A. Set mode switch to PROG and run the program without an EPROM in place. When asked for EPROM start and end address, type in 00F. After "PROGRAMMING COMPLETE" message is received, measure address bus and data bus voltage levels at SK5. The voltage level from D0 to D7 should alternatively read 0V and 5V or very near these values. A0 to A3 should read 5V and the remaining address lines, 0V. If not, find out why not before proceeding.

With the Programmer turned off, insert an EPROM. Set S2 to READ S1 to appropriate size and then switch on.

Load a small program into RAM at say £8200 then enter Program A. Now run the program and follow the instructions. On completion, remember to set mode switch to READ. Enter Program B and run it to get the program assembled.

As mentioned earlier the variables are passed to the machine code routine via the integer variables *A*, *B* and *C*.

A = EPROM start address
B = RAM start address
C = EPROM end address

If we want to load the EPROM contents into RAM at say £8200 then we type:

A=0;B£8200;C=end address of eprom*; LINK £2890

followed by return. This address is given by the Basic control program.

The cursor will reappear almost instantly. (The execution times are 45μs (2K) 165μs (4K).) To check this set TOP (?18=£82) and type E.; RUN. If all is well then save the machine code on tape thus:

*SAVE "EPROM READ" 2890 28DF

A2	C0	A0	00	A9	FF	8E	0C
88	8C	02	88	8D	03	88	AE
3D	03	AC	3E	03	8E	02	B0
84	81	86	83	AE	22	03	AC
23	03	A9	00	85	80	8E	01
B8	AD	00	88	91	80	AD	3F
03	C5	83	D0	05	EC	24	03
F0	14	E8	C8	E0	00	D0	05
EE	02	B0	E6	83	C0	00	D0
DD	E6	81	18	90	D8	60	

Hex dump of the program.

Table 2: Allocation of ports

PORT	ADDRESS	USE
PORT A	£8800	ADDRESS LINES A0 TO A7
PORT 8	£B801	DATA BUS TO/ FROM EPROM
PORT C	£B002	ADDRESS LINES A8 TO A11

CONCLUSION

This article has outlined the essentials of programming EPROMs and reading their contents. If more serious applications are required the machine code routine could be modified to be called by the burning program, and compare memory and EPROM for verification by changing the STA instruction in line 100 to a CMP instruction and writing an error routine for mismatch of contents.

Erasure of the EPROM is achieved by exposure to ultraviolet light of wavelength 2537°A with minimum integrated dose of 15W/sec/cm^{-2}.

The author found an 8W Sylvania germicidal lamp at 2cm a suitable eraser. Erasure takes about 15 minutes. In the erased state each EPROM location contains 255. □

RADIO WORLD

By Pat Hawker, G3VA

The Electronics Epoch

The development of radio and electronics over the past 100 years has had a profound effect on everyday life, though I am not sure that I go along with those who say that information technology will prove to be the coming of the second industrial revolution.

Despite the impact of electronics on our whole way of life—for better or for worse—the subject has not been very well served by the historians. There are few books that treat the subject analytically and dispassionately and too many that are concerned with claiming credit for particular persons and countries.

Baird did not "invent" television. Marconi, although he himself invented very little, still has the best claim to have developed radio communication despite the, in some ways, valid claims on behalf of Popov, Loomis, Tesla, Hughes, Jackson and others.

Watson-Watt certainly developed radar in the UK, but there were others working on similar lines in other countries, and it can be argued that the greatest British contribution was the 1940 development at the University of Birmingham by H. A. H. Boot and J. T. Randall of the cavity magnetron as a high-power generator of centimetric waves.

However, even this device owed something to the arrival in England, in May 1940, of the French scientist Maurice Ponte who brought across the Channel his resonating segment magnetrons which the British team recognised as having saved them six months of work.

International Help

The need for international co-operation on the writing of scientific and technical history has been brought home to me by receiving a much-appreciated copy of the magnificently-produced book "The Electronic Epoch". This has been written by the talented Elizabeth Antebi, a writer and producer with French broadcasting, supported by an impressive international team of scientific advisers. The UK is represented by Dr William Gosling, formerly Professor at Bath University and now research director of Plessey.

This large, heavily-illustrated book, printed in Japan, with the English-language version published by the Van Nostrand Reinhold Company, must be the first time that a serious attempt has been made to produce an international synthesis of the whole electronic epoch in both words and pictures. Subjects covered include communications, television, consumer electronics, medical electronics, radar and radio navigation.

Elizabeth Antebi has gone to enormous trouble to collect a vast number of historical photographs and to ensure that the text comes at least as close to historical truth as is possible in an industry where "not invented here" is still too often a reason for condemning new technology.

Electronic Umpiring

This year has seen the first live television transmission of a Test Match direct from Australia though once again the midnight start emphasised the unsolvable problem of large time differences. But the recent Test series also underlined the problem presented by instant slow-motion replay on television where the audience can see all-too-clearly that umpires sometimes make mistakes.

Clearly the ability of television to undermine confidence in umpiring decisions is something that needs to be considered seriously. In tennis one has seen the growing tendency to question the judgement of linesmen, although this has not been entirely solved by introducing a degree of electronic instrumentation. Yet for horse-racing few would dispute the value of the camera for close finishes—and the value of the special television recordings when objections are raised.

Action Replay

There would seem little logical reason why in cricket, the umpire in cases of doubt should not ask a clubhouse "referee" to advise him on the basis of an action replay, using perhaps a pocket radio. To prevent too many hold-ups to the game some rules would have to be worked out on how often, or just when, this facility could be used, otherwise we might have more attempts to intimidate umpires by players! But it seems absurd if the television audience can see so clearly that decisions made in good faith by the umpires are wrong.

Crystal-Ball Gazing

If at times historians get things wrong so do those who attempt to predict the future of developing technology. I have been amused to discover from various compilations (including R. L. Weber's "A random walk in science", published by The Institute of Physics) some predictions that the experts concerned must have come to wish they had never made:

"There is no plea which will justify the use of high-tension and alternating currents, either in a scientific or a commercial sense . . . I can see no justification for the introduction of a system which has no element of permanency and every element of danger to life and property"—Thomas Edison, 1889, in advocating d.c. mains.

"As far as sinking a ship with a bomb is concerned, you just can't do it"—US Rear-Admiral Clark Woodward (1939) on bombing from aircraft.

"Wireless is totally unsuited for war; the enemy could either hear all conversations, or could jam transmissions so nothing can be heard"—an earlier American rear-admiral in 1903.

"That is the biggest fool thing we have ever done. The bomb will never go off, and I speak as an expert on explosives"—yet another US admiral: William Leahy to President Truman, 1945, on the atomic bomb.

When in 1913, Lee de Forest, who first put a grid into a diode valve, was charged with fraudulently using the US mail to persuade the public to invest in his company, the District Attorney claimed: "De Forest has said . . . it would be possible to transmit the human voice across the Atlantic before many years. Based on these absurd and deliberately misleading statements, the misguided public has been persuaded to buy stock". It was only two years later, 1915, that the first radio transmission of speech across the Atlantic was accomplished!

On the other hand, it is easy to be a little over-confident. The French engineer Edouard Belin, in January 1926, said: "I am certain that before the end of 1926 an orator speaking into the microphone will have both his voice and his image transmitted simultaneously all over the globe". He was roughly 40 years out—the first genuine world programme by satellite on television was in 1965.

The Chinese have a proverb that the fish are the last to discover water; and Nicholas Butler once said: "An expert is one who knows more and more about less and less".

For a detailed booklet on remote control — send us 30p and S.A.E. (6" × 9") today.

HOME LIGHTING KITS

These kits contain all necessary components and full instructions & are designed to replace a standard wall switch and control up to 300w. of lighting.

TDR300K	Remote Control Dimmer	£14.30
MK6	Transmitter for above	£4.20
TD300K	Touchdimmer	£7.00
TDE/K	Extension kit for 2-way switching for TD300K	£2.00
LD300K	Rotary Controlled Dimmer	£3.50

DVM/ULTRA SENSITIVE THERMOMETER KIT

This new design is based on the ICL7126 (a lower power version of the ICL7106 chip) and a 3½ digit liquid crystal display. This kit will form the basis of a digital multimeter (only a few additional resistors and switches are required–details supplied), or a sensitive digital thermometer (−50°C to +150°C) reading to 0.1°C. The basic kit has a sensitivity of 200mV for a full scale reading, automatic polarity indication and an ultra low power requirement–giving a 2 year typical battery life from a standard 9V PP3 when used 8 hours a day, 7 days a week

Price £15.50

3-NOTE DOOR CHIME

Based on the SAB0600 IC the kit is supplied with all components, including loudspeaker, printed circuit board, a pre-drilled box (95 × 71 × 35mm) and full instructions. Requires only a PP3 9V battery and push-switch to complete. AN IDEAL PROJECT FOR BEGINNERS. Order as XK102 **£5.00**

XK113 MW RADIO KIT

Based on ZN414 IC, kit includes PCB, wound aerial and crystal earpiece and all components to make a sensitive miniature radio. Size: 5.5 × 2.7 × 2cms. Requires PP3 9V battery. IDEAL FOR BEGINNERS. **£5.00**

COMPONENT PACKS

PACK 1	650 Resistors 47 ohm to 10 Mohm — 10 per value £4.00
PACK 2	40 × 16V Electrolytic Capacitors 10μF to 1000μF — 5 per value £3.25
PACK 3	60 Polyester Capacitors 0.01 to 1μF/250V — 5 per value £5.55
PACK 4	45 Sub-miniature Presets 100 ohm to 1 Mohm — 5 per value £2.90
PACK 5	30 Low Profile IC Sockets 8, 14 and 16 — pin — 10 of each £2.40
PACK 6	25 Red LEDs (5mm dia,) £1.25

MINI KITS

MK1 TEMPERATURE CONTROLLER/THERMOSTAT
Uses LM3911 IC to sense temperature (80°C max.) and triac to switch heater. 1KW **£4.60**

MK2 Solid State Relay
Ideal for switching motors, lights, heaters, etc. from logic. Opto-isolated with zero voltage switching. Supplied without triac **£2.60**

MK3 BAR/DOT DISPLAY
Displays an analogue voltage on a linear 10 element LED display as a bar or single dot. Ideal for thermometers, level indicators, etc. May be stacked to obtain 20 to 100 element displays. Requires 5-20V supply. **£4.50**

MK4 PROPORTIONAL TEMPERATURE CONTROLLER
Based on the SL441 zero voltage switch, this kit may be wired to form a "burst fire" power controller, enabling the temperature of an enclosure to be maintained to within 0.5°C. Max. load 3KW **£5.55**

MK5 MAINS TIMER
Based on the ZN1034E Timer IC this kit will switch a mains load on (or off) for a preset time from 20 mins. to 35 hrs. Longer or shorter periods may be realised by minor component changes. Max. load 1KW. **£4.50**

LCD 3½ DIGIT MULTIMETER

16 ranges including DC voltage (200 mv-1000 v) and AC voltage, DC current (200 mA-10 A) and resistance (0-2 M) + NPN & PNP transistor gain and diode check. Input impedance 10M. Size 155x88x31 mm. Requires PP3 9v battery. Test leads included **ONLY £29.00**

ELECTRONIC LOCK KIT XK101

This KIT contains a purpose designed lock IC, 10-way keyboard, PCBs and all components to construct a Digital Lock, requiring a 4-key sequence to open and providing over 5000 different combinations. The open sequence may be easily changed by means of a pre-wired plug. Size: 7 x 6 x 3 cms. Supply: 5V to 15V d.c. at 40uA. Output: 750mA max. Hundreds of uses for doors and garages, car anti-theft device, electronic equipment, etc. Will drive most relays direct. Full instructions supplied.

ONLY £10.50

Electric lock mechanisms for use with latch locks and above kit **£13.50**

DISCO LIGHTING KITS

DL 1000K

This value-for-money kit features a bi-directional sequence, speed of sequence and frequency of direction change, being variable by means of potentiometers and incorporates a master dimming control. **£14.60**

DLZ100K
A lower cost version of the above, featuring undirectional channel sequence with speed variable by means of a pre-set pot. Outputs switched only at mains zero crossing points to reduce radio interference to a minimum. **Only £8.00**

Optional opto input DLA1 Allowing audio ("beat") —light response. **60p**

DL3000K
This 3 channel sound to light kit features zero voltage switching, automatic level control & built in mic. No connections to speaker or amp required. No knobs to adjust – simply connect to mains supply & lamps. (1Kw/Channel) **Only £11.95**

Have you got our **FREE ORANGE CATALOGUE** yet?
NO?! Send S.A.E. 6" × 9" TODAY!!
It's packed with details of all our KITS plus large range of SEMICONDUCTORS including CMOS, LS TTL, linear, microprocessors and memories, full range of LEDs, capacitors, resistors, hardware, relays, switches etc.
We also stock VERO and Antex products as well as books from Texas Instruments, Babani and Elektor.
ALL AT VERY COMPETITIVE PRICES.
ORDERING IS EVEN EASIER — JUST RING THE NUMBER YOU CAN'T FORGET FOR PRICES YOU CAN'T RESIST.

5-6-7 8-9-10

and give us your Access or Barclaycard No. or write enclosing cheque or postal order. Official orders accepted from schools, etc.

Answering service evngs & weekends

FAST SERVICE · TOP QUALITY · LOW LOW PRICES

No circuit is complete without a call to –

TK ELECTRONICS
11 Boston Road
London W7 3SJ

Add 55p postage & packing +15% VAT to total
Overseas Customers;
Add £2.50 (Europe), £8.00 (elsewhere) for p&p
Send S.A.E. for further STOCK DETAILS.
Goods by return subject to availability.

OPEN 9am to 5pm (Mon to Fri) 10am to 4pm (Sat)

ALL PRICES EXCLUDE VAT

TEL: 01-567 8910 ORDERS
01-579 9794 ENQUIRIES
01-579 2842 TECHNICAL AFTER 3PM

EE

Do you know anybody who can build a Digital Pulser for only £18.00? *

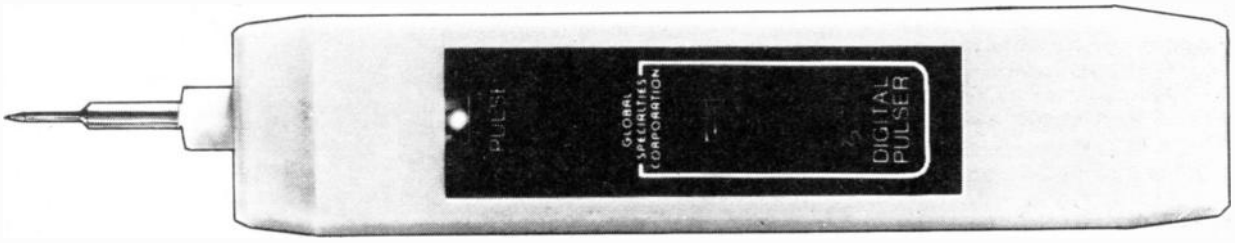

The answer is yes — its YOU!

With GSC's new DPK-1 kit, you can build a sophisticated portable test instrument for stimulus/response testing. It automatically delivers just the right signal for whichever logic family you're using – and it's equally suited to single pulses or pulse trains at a frequency of 100 per second.
The fully featured DPK-1 kit includes all components, leads, circuit board and case – and is supplied complete with detailed assembly instructions and an operating manual.
Get rid of your digital hang-ups; send off for a DPK-1 straight away.

Easy to follow Instruction Manual with every Kit

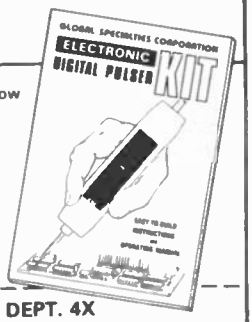

GLOBAL SPECIALTIES CORPORATION

G.S.C. (UK) LIMITED
UNIT 1, SHIRE HILL INDUSTRIAL ESTATE
SAFFRON WALDEN, ESSEX CB11 3AQ
Telephone: Saffron Walden (0799) 21682
Telex: 817477

GLOBAL SPECIALTIES CORPORATION (UK) LIMITED, DEPT. 4X
Unit 1, Shire Hill Industrial Estate, Saffron Walden, Essex CB11 3AQ

DIGITAL PULSER KIT DPK-1	*£22.42 (inc. P & P & 15% VAT)	Quantity Reqd.	

For FREE catalogue tick box ☐

Name _____ Address _____

I enclose PO/Cheque for £ _____ or debit my

Barclaycard/Access/American Express. No. _____ exp date _____

Sinclair ZX Spectr

16K or 48K RAM... full-size moving-key keyboard... colour and sound... high-resolution graphics...

From only £125!

First, there was the world-beating Sinclair ZX80. The first personal computer for under £100.

Then, the ZX81. With up to 16K RAM available, and the ZX Printer. Giving more power and more flexibility. Together, they've sold over 500,000 so far, to make Sinclair world leaders in personal computing. And the ZX81 remains the ideal low-cost introduction to computing.

Now there's the ZX Spectrum! With up to 48K of RAM. A full-size moving-key keyboard. Vivid colour and sound. High-resolution graphics. And a low price that's unrivalled.

Professional power–personal computer price!

The ZX Spectrum incorporates all the proven features of the ZX81. But its new 16K BASIC ROM dramatically increases your computing power.

You have access to a range of 8 colours for foreground, background and border, together with a sound generator and high-resolution graphics.

You have the facility to support separate data files.

You have a choice of storage capacities (governed by the amount of RAM). 16K of RAM (which you can uprate later to 48K of RAM) or a massive 48K of RAM.

Yet the price of the Spectrum 16K is an amazing £125! Even the popular 48K version costs only £175!

You may decide to begin with the 16K version. If so, you can still return it later for an upgrade. The cost? Around £60.

Ready to use today, easy to expand tomorrow

Your ZX Spectrum comes with a mains adaptor and all the necessary leads to connect to most cassette recorders and TVs (colour or black and white).

Employing Sinclair BASIC (now used in over 500,000 computers worldwide) the ZX Spectrum comes complete with two manuals which together represent a detailed course in BASIC programming. Whether you're a beginner or a competent programmer, you'll find them both of immense help. Depending on your computer experience, you'll quickly be moving into the colourful world of ZX Spectrum professional-level computing.

There's no need to stop there. The ZX Printer – available now – is fully compatible with the ZX Spectrum. And later this year there will be Microdrives for massive amounts of extra on-line storage, plus an RS232 / network interface board.

Key features of the Sinclair ZX Spectrum

- Full colour – 8 colours each for foreground, background and border, plus flashing and brightness-intensity control.
- Sound – BEEP command with variable pitch and duration.
- Massive RAM – 16K or 48K.
- Full-size moving-key keyboard – all keys at normal typewriter pitch, with repeat facility on each key.
- High-resolution – 256 dots horizontally x 192 vertically, each individually addressable for true high-resolution graphics.
- ASCII character set – with upper- and lower-case characters.
- Teletext-compatible – user software can generate 40 characters per line or other settings.
- High speed LOAD & SAVE – 16K in 100 seconds via cassette, with VERIFY & MERGE for programs and separate data files.
- Sinclair 16K extended BASIC – incorporating unique 'one-touch' keyword entry, syntax check, and report codes.

um

ZX Spectrum software on cassettes – available now

The Spectrum software library is growing every day. Subjects include games, education, and business/household management. Flight Simulation...Chess...Planetoids...History...Inventions...VU-CALC...VU-3D ...Club Record Controller...there is something for everyone. And they all make full use of the Spectrum's colour, sound, and graphics capabilities. You'll receive a detailed catalogue with your Spectrum.

ZX Expansion Module

This module incorporates the three functions of Microdrive controller, local area network, and RS232 interface. Connect it to your Spectrum and you can control up to eight Microdrives, communicate with other computers, and drive a wide range of printers.

The potential is enormous, and the module will be available in the early part of 1983 for around £30.

sinclair

Sinclair Research Ltd, Stanhope Road, Camberley, Surrey GU15 3PS.
Tel: Camberley (0276) 685311.

The ZX Printer – available now

Designed exclusively for use with the Sinclair ZX range of computers, the printer offers ZX Spectrum owners the full ASCII character set – including lower-case characters and high-resolution graphics.

A special feature is COPY which prints out exactly what is on the whole TV screen without the need for further instructions. Printing speed is 50 characters per second, with 32 characters per line and 9 lines per vertical inch.

The ZX Printer connects to the rear of your ZX Spectrum. A roll of paper (65ft long and 4in wide) is supplied, along with full instructions. Further supplies of paper are available in packs of five rolls.

The ZX Microdrive – coming soon

The new Microdrives, designed especially for the ZX Spectrum, are set to change the face of personal computing by providing mass on-line storage.

Each Microdrive can hold up to 100K bytes using a single interchangeable storage medium.

The transfer rate is 16K bytes per second, with an average access time of 3.5 seconds. And you'll be able to connect up to 8 Microdrives to your Spectrum via the ZX Expansion Module.

A remarkable breakthrough at a remarkable price. The Microdrives will be available in the early part of 1983 for around £50.

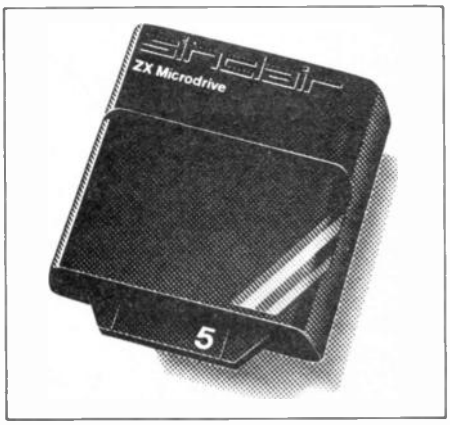

How to order your ZX Spectrum

BY PHONE – Access, Barclaycard or Trustcard holders can call 01-200 0200 for personal attention 24 hours a day, every day. BY FREEPOST – use the no-stamp needed coupon below. You can pay by cheque, postal order, Access, Barclaycard or Trustcard.

EITHER WAY – please allow up to 28 days for delivery. And there's a 14-day money-back option, of course. We want you to be satisfied beyond doubt – and we have no doubt that you will be.

To: Sinclair Research, FREEPOST, Camberley, Surrey, GU15 3BR. **Order**

Qty	Item	Code	Item Price £	Total £
	Sinclair ZX Spectrum – 16K RAM version	100	125.00	
	Sinclair ZX Spectrum – 48K RAM version	101	175.00	
	Sinclair ZX Printer	27	59.95	
	Printer paper (pack of 5 rolls)	16	11.95	
	Postage and packing: orders under £100	28	2.95	
	orders over £100	29	4.95	
			Total £	

Please tick if you require a VAT receipt ☐

*I enclose a cheque/postal order payable to Sinclair Research Ltd for £ _____

*Please charge to my Access/Barclaycard/Trustcard account no.

*Please delete/complete as applicable

Signature

PLEASE PRINT

Name: Mr/Mrs/Miss

Address

EVE 903

FREEPOST – no stamp needed. Prices apply to UK only. Export prices on application.

CALL IN AND SEE FOR YOURSELF

AUDIO ELECTRONICS

ALL PRICES INCLUDE VAT

TEST EQUIPMENT CENTRES

ALL MODELS ON DISPLAY OPEN SIX DAYS A WEEK

RETAIL • MAIL ORDER • EXPORT • INDUSTRIAL • EDUCATIONAL

DIGITAL MULTIMETERS (UK C/P Free)

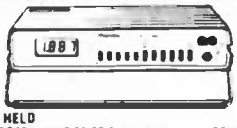

HAND HELD

K025C* 13 range 0.2A DC 2 meg ohm £24.95
K030C* 26 range 1A AC/DC 20 meg ohm £34.95
K055C* 28 range 10A AC/DC 20 meg ohm £39.95
6010+ 22 range 10A AC/DC 20 meg ohm £34.40
7030+ As 6010 but 0.1% basic. £41.30
188M 16 range 10A DC. 2 meg plus Hfe tester £39.95
189M 30 range 10A AC/DC. 20 meg plus Hfe tester £69.95

HAND HELD AUTO RANGE

DM2350* 21 range 10A AC/DC 20 meg ohm (Miniature) £49.95
HD30 16 range 0.2A AC/DC 2 meg ohm £41.95
HD30/B As above plus cont. buzzer £44.50
HD31 22 range 10 AC/DC 2 meg ohms plus cont. buzzer £58.95

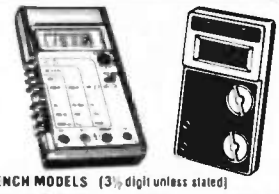

BENCH MODELS (3½ digit unless stated)

TM353• 27 range LCD 2A AC/DC £86.25
TM355• 29 range LED 10A AC/DC £86.25
TM351• 29 range LCD 10A AC/DC £113.85
2001 28 range LCD 10A AC/DC plus 5 range Cap. Meter with case £108.00
TM451 4½ digit LCD every facility (0.02%) £171.00
1503a 4½ digit LCD every facility (0.05%) £171.00
1503Ha 0.03% basic version of above £189.00

+Optional carry case £2.95 • With free carry case
• Optional carry case £6.84

EDUCATIONAL DISCOUNTS AVAILABLE FOR ALL STOCKS – PLEASE ENQUIRE

FREQUENCY COUNTERS

PFM200A 200 MHZ hand held pocket 8 digit LED £67.50
8110A 8 digit LED bench 2 ranges 100 MHZ £77.00
8610B 9 digit LED bench 2 ranges 600 MHZ £113.85
8000B 9 digit LED 3 ranges 1 GHZ £178.00
TF040* 8 digit LCD 40 MHZ £126.50
TF200* 8 digit LCD 200 MHZ £166.75
• Optional carry case £6.84

Prescalers – Extended range of most counters
TP600 600 MHZ £43.00
TP1000 1 GHZ £74.00

SIGNAL GENERATORS

(220/240v AC)

FUNCTION : All sine/square/triangle/TTL etc
TG100 1 HZ – 100 KHZ £90.00
TG102 0.2 HZ – 2 MHZ £166.75

PULSE
TG105 Various facilities 5 HZ – 5 MHZ £97.75

AUDIO : Multiband Sine/Square
LAG27 10 HZ to 1 MHZ £86.00
AG202A 20 HZ to 200 KHZ £78.00

RF
SG402 100 KHZ to 30 MHZ £59.95
LSG17 100 KHZ to 150 MHZ £71.00

AUDIO • RF • FUNCTION • PULSE

ELECTRONIC INSULATION TESTER

YF501 500 V/0-100m with carry case £63.00

MULTIMETERS

(UK C/P 65p)

Y7206 20K/V. 19 range pocket meter SPECIAL PRICE £7.95
C7081 50K/V 21 ranges. Range doubler 10A DC SPECIAL PRICE £15.95
ETC5000/5001 21 ranges. 50K/V. Range doubler. 10A DC. £16.50
TMK500 23 ranges 30K/V. 12A DC plus cont. buzzer. £23.95
NH56R 20K/V. 22 range pocket £10.95
EU102 14 range 2K/V pocket £5.95
830A 26 range 30K/V. 10A AC/DC overload protection, etc. £23.95
360TR 23 range 100K/V. Large scale 10A AC/DC plus Hfe £36.95
AT1020 18 range 20K/V. Deluxe plus Hfe tester £17.50
ST303TR 21 range 20K/V plus Hfe tester £16.95

OSCILLOSCOPES

Full specification any model on request. SAE by post.

'HM' Series HAMEG: 'SC' THANDAR: 'CS' Series TRIO: '3' Series CROTECH

SINGLE TRACE
3030 15 MHZ 5mV. 95mm tube plus component tester C/P £3.00 £172.50
SC110A•. Miniature 10 MHZ battery portable Post free £171.00
HM103 15 MHZ 2mV. 6 x 7 display plus component tester C/P £3.00 £177.00
• Optional carry case £6.84 AC adaptor £6.69 Nicads £12.50

DUAL TRACE (UK C/P £4.00)
HM203/4 Dual 20 MHZ plus component tester £276.00
CS1566A Dual 20 MHZ. All facilities £299.00
HM204 Dual 20 MHZ plus component tester sweep delay. £419.75

OPTIONAL PROBE KITS
X1 £7.95 X10 £9.45
X1 – X10 £10.50 X100 £16.95

STOCKISTS FOR TRIO: HAMEG: CROTECH: SAFGAN 'SCOPES. MOST MODELS IN STOCK.

VARIABLE POWER SUPPLIES

PP241 0/12/24V. 0/1A £35.00
PP243 3 amp version £59.95
(UK C/P £1.00)

DIGITAL THERMOMETER

TH301 LCD -50°C to +750° with thermocouple £68.43

HIGH VOLTAGE METER

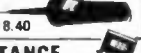

Direct reading 0/40 KV. 20K/Volt. (UK C/P 65p) £18.40

AC CLAMPMETER

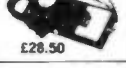

ST300 0/300A: 0/600 VAC. 0/1 Kohm 9 ranges With carry case (UK C/P 65p) £28.50

DIGITAL CAPACITANCE

0.1 pf to 2000 mfd LCD 8 ranges
DM6013 £57.95 (Carry case £2.95)

LOGIC PROBES

LP10 10 MHZ £28.50
LDP076 50 MHZ £56.90

TRANSISTOR TESTER

Direct reading PNP: NPN, etc.
TC1 £21.95
(UK C/P 65p)

FREE CATALOGUES SEND LARGE SAE (UK 20p)

ALL PRICES INCLUDE VAT

AUDIO ELECTRONICS Cubegate Limited
301 EDGWARE ROAD, LONDON W2 1BN. TEL: 01-724 3564
ALSO AT HENRYS RADIO,
404/406 EDGWARE ROAD, LONDON W2

Order by Post with CHEQUES: ACCESS/VISA or you can telephone your orders. All orders despatched within 5 days unless advised

PLASTIC CASES

beige cases offer choice of front panels; grey plastic (P), silver plastic (M) and aluminium (A). PCB slots and 10° tilt vertically or desk style.

TYPE	EXTERNAL DIMENSIONS	PRICE EACH P	M	A
10	85 × 60 × 40	0·99	1·16	1·22
20	110 × 75 × 50	1·20	1·49	1·72
30	155 × 95 × 60	2·10	2·51	2·74

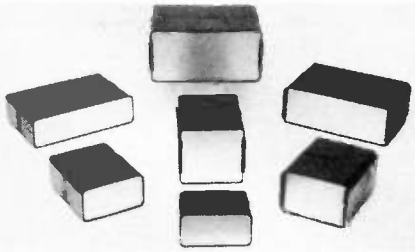

BLACK CASES WITH BLACK AND SILVER END PANELS. PCB BOSSES. TOP SCREWS TO BOTTOM.

TYPE	EXT DIMS	EACH	TYPE	EXT DIMS	EACH
110	115 × 74 × 64	2·47	220	220 × 140 × 64	4·81
115	115 × 140 × 64	2·85	221	220 × 140 × 84	6·53
116	115 × 140 × 84	4·52	222	220 × 140 × 114	7·68
117	115 × 140 × 114	5·38			

Mail Order only. All prices include VAT and P&P. Send large SAE for Catalogue of boxes, knobs, power supplies (from 5A to 150A), controllers and more.

elec trans

DEPT. EE3, 2 THE WILLOWS, HERSTMONCEUX, East Sussex, BN27 4LE. Tel. 0323 832571.

A PRACTICAL DIGITAL ELECTRONIC KIT FOR ☆ LESS THAN £20 ☆

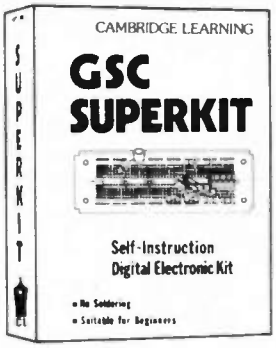

SUITABLE FOR BEGINNERS

NO SOLDERING!

Learn the wonders of digital electronics and see how quickly you are designing your own circuits. The kit contains: *seven LS TTL integrated circuits, breadboard, LEDs, and all the DIL switches, resistors, capacitors, and other components to build interesting digital circuits;* plus a very clear and thoroughly tested instruction manual (also available separately). All this comes in a pocket size plastic wallet for only £19·90p inc VAT and p&p. This course is for true beginners – the only extra you need is a 4½V battery.

- needs no soldering iron.
- asks plenty of questions, but never leaves you stuck and helpless.
- teaches you about fault-finding, improvisation, and subsystem checking.

This course teaches boolean logic, gating, R-S and J-K flipflops, shift registers, ripple counters, and half-adders.

Cheque with order to:–
Cambridge Learning Limited, Unit 34 Rivermill Site, FREEPOST, St Ives, Huntingdon, Cambs. PE17 4BR, England.
or tel 0480 67446 with credit card details

Cambridge Learning

E.E. PROJECT KITS

I.C.s TRANSISTORS CAPACITORS TOOLS RESISTORS HARDWARE CASES KITS

MAGENTA

Make us your No. 1 SUPPLIER OF KITS and COMPONENTS for E.E. Projects. We supply carefully selected sets of parts to enable you to construct E.E. projects. Kits include ALL THE ELECTRONICS AND HARDWARE NEEDED. Printed circuit boards (fully etched, drilled and roller tinned) or Veroboard are, of course, included as specified in the original article, we even include nuts, screws and I.C. sockets. PRICES INCLUDE CASES unless otherwise stated. BATTERIES ARE NOT INCLUDED. COMPONENT SHEET INCLUDED. If you do not have the issue of E.E. which includes the project—you will need to order the instruction reprint at an extra 45p each.
Reprints available separately 45p each + p. & p. 45p.

DOUBLE DICE Jan. 83. £10·82
ELECTRONIC V/I METER Dec. 82. £11·38
ZX TAPE CONTROL Nov 82. £6·48
PHOTO FINISH Nov 82. £5·98
SINE WAVE GEN Oct. 82. £14·65
G. P. PRE-AMP Oct. 82. £5·64
LIGHTS ON ALERT Oct. 82. £4·25
CONTINUITY CHECKER Sept 82. £4·97
SOUND SPLITTER Sept 82. £15·77
SOUND RECOMBINER Sept 82. £3·70
SCREEN WASH DELAY Sept 82. £4·48
INSTRUMENT PRE AMP Aug. 82. £7·02
TWO TONE DOORBELL ALARM Aug 82, less case and bell transformer. £8·82
CB ROGER BLEEPER Aug 82 £8·47
BRAKE LIGHT RELAY July 82. £4·80
2-WAY INTERCOM July 82. £4·11
ELECTRONIC PITCH PIPE July 82 £4·91
REFLEX TESTER July 82. £7·07
SEAT BELT REMINDER June 82. £3·73
EGG TIMER June 82. £4·95
TWO TONE TRAIN HORN WITH REMOTE TRIGGER OPTION May 82. £11·26
CAR LED VOLTMETER less case. May 82. £2·89
LIGHTNING CHESS BUZZER. May 82 £6·20
V.C.O. SOUND EFFECTS UNIT Apr 82 £11·56
CAMERA OR FLASH GUN TRIGGER Mar 82. £12·41 less tripod bushes.
POCKET TIMER Mar 82. £3·71.
GUITAR TUNER Mar 82. £15·63.
CAR OVERHEATING ALARM. Feb. 82. £9·61.
SIMPLE STABILISED POWER SUPPLY. Jan. 82. £24·58
MINI EGG TIMER. Jan. 82. £3·94
SIREN MODULE. Jan. 82. less speaker. £5·57.
MODEL TRAIN CHUFFER. Jan. 82. £8·27.
SQUARE SIX. Dec. 81. £4·70.
GUITAR ADAPTOR. Dec. 81. £3·76
REACTION METER. Dec. 81. £17·55.
ELECTRONIC IGNITION. Nov. 81. £25·98.
SIMPLE INFRA RED REMOTE CONTROL. Nov. 81. £14·98.
PRESSURE MAT TRIGGER ALARM. Nov. 81. £8·27 less mats.
EXPERIMENTER CRYSTAL SET. Nov. 81. Less aerial. £5·99. Headphones. £2·98 extra.
CAPACITANCE METER. Oct. 81. £23·51.
SUSTAIN UNIT. Oct. 81. £12·76.
'POPULAR DESIGNS'. Oct. 81.
TAPE NOISE LIMITOR. £4·57.
HEADS AND TAILS GAME. £2·52.
CONTINUITY TESTER. £3·95.
PHOTO FLASH SLAVE. £3·46.
FUZZ BOX. £7·29.
OPTO ALARM. £6·78.
SOIL MOISTURE UNIT. £5·81.
ICE ALARM. £7·89.
0-12V POWER SUPPLY. Sept. 81. £17·98
CMOS CAR SECURITY ALARM. Sept. 81. £9·08
CMOS DIE. Sept. 81. £7·99
LED SANDGLASS. Aug. 81. £8·53.
CMOS METRONOME. Aug. 81. £8·23.
COMBINATION LOCK. July 81. Less case. £19·58.
BURGLAR ALARM SYSTEM. June 81 less bell, loop & Mic's. £40·98.
TAPE AUTO START. June 81. £12·79.
LIGHTS REMINDER AND IGNITION LOCATOR E.E. May 81. £5·66
SOIL MOISTURE INDICATOR E.E. May 81. £4·09.
GUITAR HEADPHONE AMPLIFIER E.E. May 81. £4·23.
PHONE BELL REPEATER / BABY ALARM E.E. May 81. £5·66.
INTERCOM. April 81. £22·23.
SIMPLE TRANSISTOR & DIODE TESTERS. Mar. 81. Ohmeter version £2·02. Led version £2·73
MINI SIREN. Mar. 81. £8·04.
LED DICE. Mar. 81. £8·44.
LED FLASHER. Mar. 81. £4·29.
MODULATED TONE DOORBELL. Mar. 81. £8·64.
BENCH POWER SUPPLY. Mar. 81. £53·47.
THREE CHANNEL STEREO MIXER. Feb. 81. £18·69.
SIGNAL TRACER. Feb. 81. £8·17 less probe.
NI-Cd BATTERY CHARGER. Feb. 81. £13·81.
ULTRASONIC INTRUDER DETECTOR. Jan. 81 less case. £53·47.
2 NOTE OOOR CHIME. Dec. 80. £18·32.
LIVE WIRE GAME. Dec. 80. £11·78.
GUITAR PRACTICE AMPLIFIER. Nov. 80. £12·82 less case. Standard case £3·88. High quality case £8·33.
SOUND TO LIGHT. Nov. 80. 3 channel. £21·34.
TRANSISTOR TESTER. Nov. 80. £11·63 inc. test leads.
AUDIO EFFECTS UNIT FOR WEIRD SOUNDS. Oct. 80. £13·11.
BICYCLE ALARM. Oct. 80. £18·35 less mounting brackets.
IRON HEAT CONTROL. Oct. 80. £5·86.
TTL LOGIC PROBE. Sept. 80. £5·18.
ZENER DIODE TESTER. June 80. £6·66.
4 STATION RADIO. May 80. £18·29 less case.
LIGHTS WARNING SYSTEM. May 80. £4·68.
BATTERY VOLTAGE MONITOR. May 80. £5·18.
CABLE & PIPE LOCATOR. Mar. 80. £4·11 less coil former.
KITCHEN TIMER. Mar. 80. £14·85.
STEREO HEADPHONE AMPLIFIER. Mar. 80. £18·15.
MICRO MUSIC BOX. Feb. 80. £16·26. Grey Case £3·99 extra.
SIMPLE SHORT WAVE RECEIVER. Feb. 80. £25·86. Headphones £2·86.
SLIDE/TAPE SYNCHRONISER. Feb. 80. £12·30.
MORSE PRACTICE OSCILLATOR. Feb. 80. £4·62.
SPRING LINE REVERB. UNIT. Jan. 80. £25·84.
UNIBOARD BURGLAR ALARM. Dec. 79. £6·93.
BABY ALARM. Nov. 79. £9·60.
CHASER LIGHTS. Sept. 79. £23·40.
SIMPLE TRANSISTOR TESTER. Sept. 79. £7·30.
DARKROOM TIMER. July 79. £2·89.
ELECTRONIC CANARY. June 79. £5·88.
MICROCHIME DOORBELL. Feb. 79. £15·85.
THYRISTOR TESTER. Feb. 79. £3·78.
FUSE CHECKER. Oct. 78. £2·31.
SOUND TO LIGHT. Sept. 78. £8·42.
CAR BATTERY STATE INDICATOR. Sept. 78. Less case. £2·69.
R.F. SIGNAL GENERATOR. Sept. 78. £26·72.
IN SITU TRANSISTOR TESTER. June 78. £4·77.
WEIRD SOUND EFFECTS GENERATOR. Mar. 78. £5·59.
AUDIO VISUAL METRONOME. Jan. 78 £5·98.
ELECTRONIC TOUCH SWITCH. Jan. 78. £2·73 less case.
RAPID DIODE CHECK. Jan. 78. £2·74.
PHONE/DOORBELL REPEATER. July 77. £7·46.
ELECTRONIC DICE. Mar. 77. £5·68.

MORE KITS AND COMPONENTS IN OUR LISTS

FREE PRICE LIST
Price list included with orders or send sae (9 × 4)
CONTAINS LOTS MORE KITS, PCBs & COMPONENTS

1982 ELECTRONICS CATALOGUE

Illustrations, product descriptions, circuits all included. Up-to-date price list enclosed. All products are stock lines for fast delivery.
Send 80p in stamps or add 80p to order.

MORE E.E. KITS PLUS H.E. and E.T.I. PROJECT KITS IN THE PRICE LIST.

MAGENTA gives you FAST DELIVERY OF QUALITY COMPONENTS & KITS. All products are stock lines and are new & full specification. We give personal service & quality products to all our customers—HAVE YOU TRIED US?

MAGENTA ELECTRONICS LTD.

EH48, 135 HUNTER ST. BURTON-ON-TRENT, STAFFS., DE14 2ST. 0283 65435. MON.-FRI. 9-5. MAIL ORDER ONLY.
ADD 45p P. & P. TO ALL ORDERS. PRICES INC. VAT

Normal despatch by return of post.
OFFICIAL ORDERS WELCOME.
OVERSEAS. Payment must be in sterling.
IRISH REPUBLIC and BFPO: UK PRICES.
EUROPE: UK PRICES plus 10%.
ELSEWHERE: Write for quote.

SOLDERING/TOOLS

ANTEX X5 SOLDERING IRON 25W ..... £5·48
SOLDERING IRON STAND .. £1·98
SPARE BITS. Small, standard, large, 65p each. For X5 + X25
SOLDER. Handy size 99p
SOLDER CARTON ..... £1·84
DESOLDER BRAID 69p
HEAT SINK TWEEZERS 29p
DESOLDER PUMP ..... £6·48
HOW TO SOLDER LEAFLET 12p
LOW COST CUTTERS ..... £1·69
LOW COST LONG NOSE PLIERS ..... £1·68
WIRE STRIPPERS & CUTTERS ..... £2·69

MULTIMETER TYPE 2. (YN360TR) 20K o.p.v. with transistor tester. £14·75

HELPING HANDS JIG £6·30

Heavy base. Six ball and socket joints allow infinite variation of clips through 360°. Has 2½" diameter (2·5 × magnifier attached), used and recommended by our staff.

VERO SPOT FACE CUTTER .... £1·49
PIN INSERTION TOOL ..... £1·98
VEROPINS (pk of 100) 0·1" 52p
MULTIMETER TYPE 1 (1,000 opv) £5·48
SET, 10 loads with 20 clips 99p
RESISTOR COLOUR CODE CALCULATOR 21p
CONNECTING WIRE PACK TYPE ED. 11 colours 49p

ILLUMINATED MAGNIFIERS
Small 2" dia. (5× mag.) ..... £1·14
Large 3" dia. (4× mag.) £2·40
CAST IRON VICE ..... £2·98
SCREWDRIVER SET ..... £1·98
POCKET TOOL SET ..... £3·98
DENTISTS INSPECTION MIRROR £2·85
JEWELLERS EYEGLASS ..... £1·50
PLASTIC TWEEZERS 69p
PAIR OF PROBES WITH LEADS (cc) 77p

TEACH IN 82

All top quality components as specified by Everyday Electronics. Our kit comes complete with FREE COMPONENT IDENTIFICATION SHEET. Follow this educational series and learn about electronics—Start Today.
LIST 1 and LIST 2 together £27·98. LIST 3 £5·98.

★ ★ ★ SPECIAL OFFER ★ ★ ★
LISTS 1, 2 and 3 all bought together £33·48.

WOODEN CASE KIT also available £11·98—wood, formica, glue, screws etc. Cut to size.
12 part series, reprints available of previously published parts. 45p each.

LISTS 1, 2, AND 3 ALL AVAILABLE NOW. ALSO WOODEN CASE KIT.

BOOKS

SEMICONDUCTOR DATA BOOK Newnes £5·98
ELECTRONIC PROJECTS FOR HOME SECURITY £3·35
ELECT. PROJECTS IN PHOTOGRAPHY £3·35
110 ELECT. ALARM PROJECTS £5·35
MODEL RAILWAY PROJECTS £1·95
BASIC ELECTRONICS. Theory and practice £7·98
BEGINNERS GUIDE TO BUILDING ELECT. PROJECTS £1·50

ADVENTURES WITH MICROELECTRONICS

Similar to 'Electronics' below. Uses I.C.s. Includes dice, electronic organ, doorbell, reaction timer, radio etc. Based on Bimboard 1 bread board.
Adventures with Microelectronics £2·55
Component pack £29·64 less battery.

ADVENTURES WITH ELECTRONICS by Tom Duncan

An easy to follow book suitable for all ages. Ideal for beginners. No soldering, uses an S-Dec breadboard. Gives clear instructions with lots of pictures. 16 projects—including three radios, siren, metronome, organ, intercom, timer, etc. Helps you learn about electronic components and how circuits work. Component pack includes an S-Dec breadboard and all the components for the projects.
Adventures with Electronics £2·40. Component pack £18·98 less battery.

ADVENTURES WITH DIGITAL ELECTONICS

New book by Tom Duncan in the popular 'Adventures' series. This book of entertaining and instructive projects is designed for hobbyists and students. It provides a stepping stone to the microprocessor.

The first part deals with the properties of some basic ICs used in digital electronics.

The second part gives details of how to build eight devices—shooting gallery, 2-way traffic lights, electronic adder, computer space invaders game, etc.

For each project there is an explanation of 'how it works' and also suggestions for 'things to try'.

No soldering—all circuits built on 2 Bimboard 1 breadboards.

Adventures with Digital Electronics book £3·25. Component pack £42·50, ref. EEDC. All the components needed including 2 breadboards and hexadecimal keyboard. Available less breadboards £29·98, ref. EEDF. Both less battery.

MASTER ELECTRONICS NOW!

The PRACTICAL way!

This new style course will enable anyone to have a real understanding of electronics by a modern, practical and visual method. No previous knowledge is required, no maths, and an absolute minimum of theory.

You learn the practical way in easy steps mastering all the essentials of your hobby or to start or further a career in electronics or as a self-employed servicing engineer.

All the training can be carried out in the comfort of your own home and at your own pace. A tutor is available to whom you can write personally at any time, for advice or help during your work. A Certificate is given at the end of every course.

You will do the following:

- Build a modern oscilloscope
- Recognise and handle current electronic components
- Read, draw and understand circuit diagrams
- Carry out 40 experiments on basic electronic circuits used in modern equipment
- Build and use digital electronic circuits and current solid state 'chips'
- Learn how to test and service every type of electronic device used in industry and commerce today. Servicing of radio, T.V., Hi-Fi and microprocessor/computer equipment.

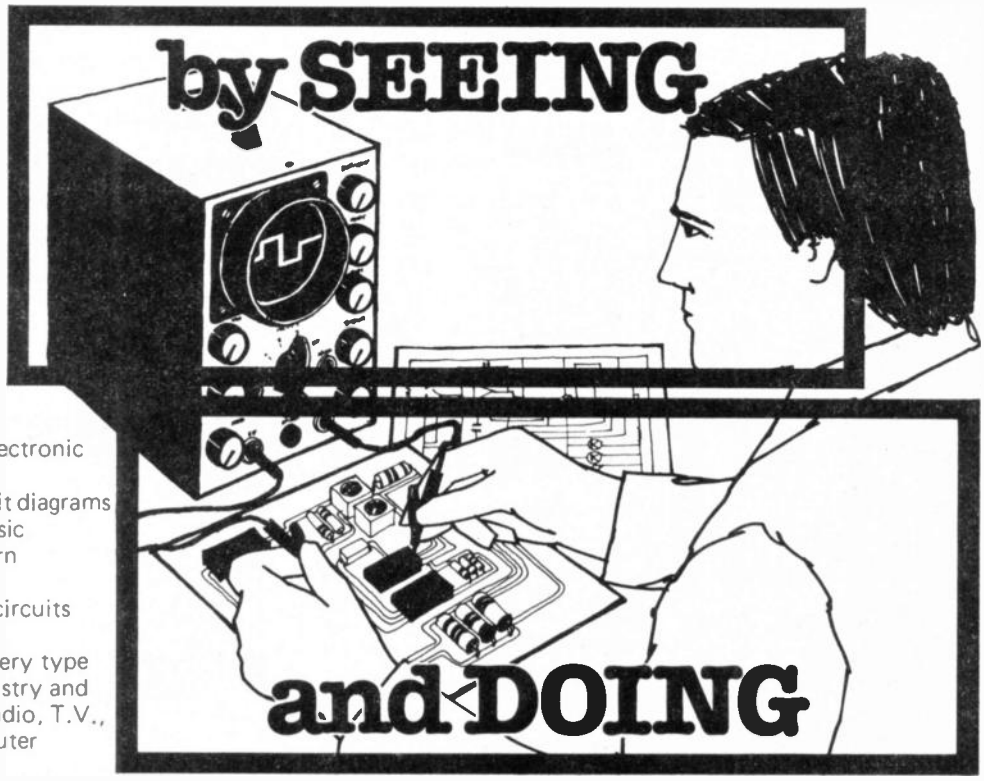

New Job? New Career? New Hobby? Get into Electronics Now!

FREE!
COLOUR BROCHURE

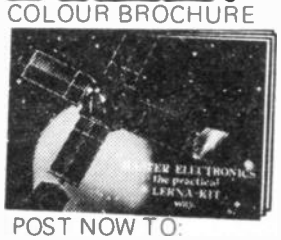

Please send your brochure without any obligation to

NAME _____

ADDRESS _____

_____

BLOCK CAPS PLEASE

I am interested in:

- [ ] COURSE IN ELECTRONICS as described above
- [ ] RADIO AMATEUR LICENCE
- [ ] MICROPROCESSORS
- [ ] LOGIC COURSE

OTHER SUBJECTS _____

EE/3/820

POST NOW TO:
British National Radio & Electronics School Reading, Berks. RG1 1BR.

ambit® INTERNATIONAL

THE MOST COMPREHENSIVE RANGE OF COMPONENTS, KITS AND MODULES IN THE WORLD & THERE'S ONLY ROOM FOR A FRACTION HERE, GET THE CATALOGUE AND FIND THE REST.

ALWAYS USE STOCK CODE WHEN ORDERING PLEASE.

REMEMBER — THE LOWEST PRICED NICADS : AA 80p; C £2.35; Sub D £2.15; D £3.05; PP3 £3.70

NEW AMBIT CATALOGUE — SPRING ISSUE No.5 — AVAILABLE MARCH — ORDER YOUR COPY NOW 75p inc.

4000 CMOS

Type	Stock No	Price
4000UB	22 04000	0.11
4001	23 04001	0.11
4002	23 04002	0.12
4007	23 04007	0.13
4008	23 04008	0.58
4009UB	22 04009	0.25
4011	23 04011	0.11
4011UB	23 04011	0.11
4012	23 04012	0.14
4013	23 04013	0.25
4015	23 04015	0.50
4016	23 04016	0.22
4017	23 04017	0.40
4020	23 04020	0.55
4021	23 04021	0.55
4022	23 04022	0.65
4023	23 04023	0.15
4024	23 04024	0.33
4025	23 04025	0.15
4027	23 04027	0.20
4028	23 04028	0.50
4029	23 04029	0.55
4035	23 04035	0.87
4040	23 04040	0.80
4042	23 04042	0.50
4043	23 04043	0.60
4044	23 04044	0.68
4046	23 04046	0.60
4049UB	22 04049	0.24
4050	23 04050	0.24
4051	23 04051	0.55
4052	23 04052	0.66
4053	23 04053	0.65
4060	23 04060	0.75
4066	23 04066	0.30
4068	23 04068	0.10
4068UB	22 04089	0.14
4070	23 04070	0.16
4071	23 04071	0.16
4072	23 04072	0.16
4073	23 04073	0.16
4075	23 04075	0.16
4076	23 04076	0.55
4077	23 04077	0.10
4078	23 04078	0.16
4081	23 04081	0.10
4082	23 04082	0.10
4093	23 04093	0.30
4099	23 04099	0.80
4175	23 04175	0.80
4502	23 04502	0.80
4503	23 04503	0.50
4506	23 04506	0.70
4507	23 04507	0.37
4508	23 04508	1.04
4510	23 04510	0.55
4511	23 04511	0.45
4512	23 04512	0.55
4514	23 04514	1.25
4515	23 04515	1.25
4516	23 04516	0.64
4518	23 04518	0.35
4520	23 04520	0.60
4521	23 04521	1.30
4522	23 04522	0.80
4526	23 04526	0.80
4527	23 04527	0.80
4528	23 04528	0.65
4529	23 04529	0.70
4531	23 04531	0.65
4532	23 04532	0.60
4534	23 04534	0.00
4536	23 04536	2.50
4538	23 04538	0.85
4539	23 04539	0.80
4543	23 04543	0.80
4549	23 04549	3.50
4553	23 04553	2.70
4554	23 04554	1.20
4555	23 04555	0.35
4556	23 04556	0.40
4557	23 04557	2.30
4558	23 04558	0.80
4559	23 04559	3.50
4560	23 04560	2.50
4561	23 04561	1.00
4562	23 04562	2.50
4566	23 04566	1.20
4568	23 04568	1.45
4569	23 04569	1.70
4572UB	23 04572	0.32
4580	23 04580	3.25
4581	23 04581	1.40
4582	23 04582	0.70
4583	23 04583	0.80
4584	23 04584	0.27
4585	23 04585	0.45
4702	23 04702	4.50
4703	23 04703	4.44
4704	23 04704	4.24
4705	23 04705	4.24
4706	23 04706	4.50
4720	23 04720	4.00
4723	23 04723	0.95
4724	23 04724	0.95
4725	23 04725	2.24
40014	23 40014	0.64
40085	23 40085	0.95
40098	23 40098	0.54
40106	23 40106	0.89
40160	23 40160	1.95
40161	23 40161	1.05
40162	23 40162	1.05
40163	23 40163	1.05
40174	23 40174	1.05
40175	23 40175	1.05
40192	23 40192	1.06
40193	23 40193	1.06
40195	23 40195	1.00

74LSXX

Type	Stock No	Price
74LS00	31 07400	0.10
74LS01	31 07401	0.11
74LS02	31 07402	0.11
74LS03	31 07403	0.11
74LS04	31 07404	0.14
74LS05	31 07405	0.14
74LS08	31 07408	0.14
74LS09	31 07409	0.14
74LS10	31 07410	0.14
74LS11	31 07411	0.14
74LS12	31 07412	0.14
74LS13	31 07413	0.32
74LS14	31 07414	0.32
74LS15	31 07415	0.14
74LS20	31 07420	0.14
74LS21	31 07421	0.14
74LS22	31 07422	0.14
74LS26	31 07426	0.14
74LS27	31 07427	0.30
74LS28	31 07428	0.10
74LS30	31 07430	0.14
74LS32	31 07432	0.14
74LS33	31 07433	0.14
74LS37	31 07437	0.18
74LS38	31 07438	0.14
74LS40	31 07440	0.10
74LS42	31 07442	0.30
74LS47	31 07447	0.75
74LS48	31 07448	0.40
74LS49	31 07449	0.80
74LS51	31 07451	0.14
74LS54	31 07454	0.14
74LS55	31 07455	0.14
74LS74	31 07474	0.21
74LS75	31 07475	0.21
74LS76	31 07476	0.25
74LS78	31 07478	0.19
74LS83	31 07483	0.33
74LS85	31 07485	0.44
74LS86	31 07486	0.15
74LS90	31 07490	0.24
74LS91	31 07491	0.30
74LS92	31 07492	0.32
74LS93	31 07493	0.24
74LS95	31 07495	0.36
74LS107	31 74107	0.31
74LS109	31 74109	0.25
74LS112	31 74112	0.21
74LS113	31 74113	0.21
74LS114	31 74114	0.31
74LS122	31 74122	0.27
74LS123	31 74123	0.36
74LS125	31 74125	0.27
74LS126	31 74126	0.27
74LS132	31 74132	0.27
74LS133	31 74133	0.24
74LS136	31 74136	0.20
74LS138	31 74138	0.30
74LS139	31 74139	0.30
74LS151	31 74151	0.30
74LS153	31 74153	0.34
74LS155	31 74155	0.30
74LS156	31 74156	0.33
74LS157	31 74157	0.27
74LS158	31 74158	0.27
74LS160	31 74160	0.34
74LS161	31 74161	0.30
74LS162	31 74162	0.30
74LS163	31 74163	0.30
74LS164	31 74164	0.40
74LS165	31 74165	0.40
74LS166	31 74166	0.50
74LS168	31 74168	0.65
74LS170	31 74170	0.83
74LS173	31 74173	0.47
74LS174	31 74174	0.37
74LS175	31 74175	0.40
74LS181	31 74181	0.87
74LS183	31 74183	1.05
74LS190	31 74190	0.30
74LS191	31 74191	0.39
74LS192	31 74192	0.39
74LS193	31 74193	0.38
74LS194	31 74194	0.35
74LS195	31 74195	0.39
74LS196	31 74196	0.39
74LS197	31 74197	0.47
74LS221	31 74221	0.60
74LS240	31 74240	0.60
74LS241	31 74241	0.60
74LS242	31 74242	0.55
74LS243	31 74243	0.55
74LS244	31 74244	0.40
74LS245	31 74245	[illegible]
74LS251	31 74251	0.30
74LS253	31 74253	0.30
74LS257	31 74252	0.30
74LS258	31 74258	0.30
74LS259	31 74259	0.50
74LS260	31 74260	0.20
74LS266	31 74266	0.20
74LS273	31 74273	0.70
74LS279	31 74279	0.35
74LS283	31 74283	0.40
74LS290	31 74290	0.40
74LS293	31 74293	0.40
74LS298	31 74298	0.54
74LS365	31 74365	0.34
74LS366	31 74366	0.40
74LS367	31 74367	0.30
74LS368	31 74368	0.36
74LS373	31 74373	0.72
74LS374	31 74374	0.72
74LS375	31 74375	0.31
74LS377	31 74322	0.80
74LS378	31 74378	0.44
74LS379	31 74379	0.44
74LS385	31 74385	1.30
74LS386	31 74386	0.27
74LS390	31 74390	0.51
74LS393	31 74393	0.40
74LS398	31 74398	0.80
74LS399	31 74322	0.65
74LS490	31 74490	0.10
74LS670	31 74670	1.15

74CXX

Type	Stock No	Price
74C00	29 07400	0.35
74C02	29 07402	0.35
74C04	4069C	
74C08	29 07408	0.35
74C10	29 07410	0.35
74C14	4584C	
74C20	29 07420	0.35
74C30	29 07430	0.35
74C32	29 07432	0.35
74C42	29 07442	1.06
74C48	29 07448	1.50
74C73	29 07473	0.75
74C74	29 07474	0.75
74C76	29 07476	0.60
74C83	29 07483	1.30
74C85	29 07485	1.30
74C86	29 07485	1.30
74C89	29 07489	3.60
74C90	29 07490	1.06
74C93	29 07493	1.05
74C95	29 07495	1.25
74C107	29 74107	0.66
74C151	29 74151	2.10
74C154	29 74154	3.05
74C157	29 74157	2.10
74C160	40160	
74C1610	40161CM	
74C1620	40162CM	
74C1630	40163CM	
74C164	29 74164	1.66
74C165	29 74165	1.10
74C173	4076C	
74C1740	40174CM	
74C1750	40175CM	
74C1920	40192CM	
74C1930	40193CM	
74C1950	40195CM	
74C200	29 74200	0.50
74C221	29 74221	1.05
74C901	29 74901	0.65
74C902	29 74902	0.65
74C903	29 74903	0.65
74C904	29 74904	0.65
74C905	29 74905	0.80
74C906	29 74906	0.55
74C907	29 74907	0.55
74C908	29 74908	1.10
74C909	29 74909	2.10
74C910	29 74910	6.00
74C914	29 74914	1.10
74C918	29 74918	1.30
74C925	29 74925	0.80
74C926	29 74926	0.80
74C927	29 74927	0.80

74HCXX

Type	Stock No	Price
74HC00	30 07400	0.50
74HC02	30 07402	0.56
74HC04	30 07404	0.60
74HC10	30 07410	0.50
74HC20	30 07420	0.56
74HC86	30 07486	0.74
74HC132	30 74132	1.20
74HC266	30 74266	0.81
74HC4002	30 04002	0.56
74HC4075	30 04075	0.56
74HC242	30 74242	2.00
74HC243	30 74243	2.00
74HC74	30 07474	0.74
74HC109	30 74109	0.86
74HC175	30 74175	1.00
74HC373	30 74373	2.40
74HC374	30 74374	2.40
74HC533	30 74533	2.40
74HC534	30 74534	2.40
74HC165	30 74165	1.06
74HC173	30 74173	1.20
74HC180	30 74180	1.33
74HC161	30 74161	1.33
74HC162	30 74162	1.33
74HC163	30 74163	1.33
74HC4538	30 74538	2.10
74HC85	30 74280	2.05
74HC280	30 74280	2.15
74HC42	30 07442	1.00
74HC138	30 74138	1.04
74HC139	30 74139	1.00
74HC4514	30 04514	3.40
74HC4543	30 04543	2.75
74HC157	30 74157	0.92
74HC158	30 74158	0.90
74HC257	30 74257	0.90

SMALL SIGNAL AUDIO

Device	Stock No	Price
BC182	58 00182	0.10
BC212	58 00212	0.10
BC237	58 00237	0.40
BC238	58 00238	0.80
BC239	58 00239	0.80
BC307	58 00302	0.06
BC308	58 00308	0.04
BC309	58 00309	0.04
BC327	58 00322	0.13
BC337	58 00337	0.13
BC413	58 00413	0.10
BC414	58 00414	0.11
BC415	58 00415	0.10
BC416	58 00416	0.11
BC546	58 00546	0.12
BC550	58 00550	0.12
BC556	58 00556	0.12
BC560	58 00560	0.12
BC639	58 00639	0.22
BC640	58 00640	0.22
MPSA13	58 04013	0.30
MPSA63	58 04063	0.30
ZTX108	58 01108	0.10
ZTX212	58 01212	0.10
ZTX653	58 01653	0.30
ZTX753	58 01753	0.20
2N2904	58 02904	0.25
2N2905	58 02905	0.25
2N3805	58 03805	0.10
2SB646A	58 03646	0.36
2SB648A	58 03648	0.40
2SD666A	58 03666	0.36
2SD668A	58 03668	0.40
2SA872A	58 02872	0.19
2SA1084E	58 01084	0.25
2SA1085E	58 01085	0.25
2SC1775A	58 01775	0.19
2SC2546E	58 02546	0.24
2SC2547E	58 02547	0.24

AUDIO POWER

Device	Stock No	Price
BD130	58 15130	0.20
BD140	58 15140	0.31
BD185	58 15185	0.44
BD166	58 15166	0.44
BD179	58 15179	0.30
BD180	58 15180	0.41
TIP31A	58 15031	0.35
TIP32A	58 15032	0.35
MJ2955	58 12955	0.80
2N3055	58 13099	0.80
2SB720	58 15720	0.80
2SD780	58 17600	0.80
2SJ49	80 01049	3.10
2SJ50	80 01050	4.25
2SJ83	80 01083	3.55
2SK134	80 00134	3.10
2SK135	80 00135	4.25
2SK227	80 00227	3.50
2SD753	58 03753	2.34

SMALL SIGNAL RF

Device	Stock No	Price
BF158	58 06500	0.22
BF241	58 06241	0.10
BF273	58 06223	0.10
BF274	58 06274	0.20
BF362	58 06362	0.40
BF440	58 06440	0.21
BF441	58 06441	0.21
BF479	58 06479	0.86
BFR795	58 06679	0.55
BFR91	58 07091	1.33
BFT95	58 10095	0.99
BFW92	58 08092	0.80
BFY90	58 09090	0.90
NE21936	58 21936	6.00
ZTX323	58 08232	0.60
2N2369A	58 02369	0.30

RF POWER

Type	Stock No	Price
BFW16A	58 08016	0.65
MRF237	58 14237	3.70
MRF238	58 14238	10.50
MRF245	58 14245	40.00
MRF449A	58 14449	10.80
MRF472	58 14472	1.28
MRF475	58 14475	4.80
MRF629	58 14629	4.99
PT8811	58 18411	0.58
TP2320	58 12320	10.24
VN88AF	80 07066	0.95
ZTX3866	58 03866	0.45
2N3866	58 13866	1.20

SMALL SIGNAL FET

Type	Stock No	Price
BF256	58 00256	0.30
BF980	80 00980	0.99
BF961	80 00961	0.70
BF963	80 08963	1.00
J310	58 02310	0.80
J176	58 02176	0.85
2SK55	58 01055	0.32
2SK168	58 01168	0.37
3SK45	80 04045	0.41
3SK51	80 04051	0.64
3SK60	80 04060	0.50
3SK88	80 04088	0.80
40673 see 3SK51		
40822 see 3SK51		
40823	80 03823	0.65
3SK112	80 04112	0.80

DIODES

Type	Stock No	Price
AA112	12 01120	0.25
BA244	12 02442	0.17
BA379	12 03792	0.35
ND4981 7E	12 49812	0.81
OA91	12 00916	0.07
OA47	12 00476	0.10
PW02	12 62006	0.75
S04	12 24006	0.46
W005	12 10506	0.20
1N4001	12 40016	0.04
1N4002	12 40026	0.07
1N4004	12 40046	0.07
1N4148	12 41486	0.05
1N5404	12 54046	0.10
1N6263	12 62637	0.82

VARICAPS

Type	Stock No	Price
BA102	12 01025	0.30
BA121	12 01215	0.30
BB105B	12 01055	0.30
BB109B	12 01095	0.27
BB204B	12 02045	0.36
BB212	12 02125	1.06
ITT210	12 02105	0.30
MVAM115 see KV1236		
MVAM125 see KV1225		
KV1210	12 12105	2.46
KV1211 see KV1236		
KV1225	12 12255	2.76
KV1235	12 12355	2.76
KV1236	12 12365	2.50
KV1310	12 13105	0.46
KV1310	12 13205	0.46

ZENER DIODES

Type	Stock No	Price
BZY88C 400mW 5%		
2V7	12 00278	0.10
3V3	12 00338	0.10
3V9	12 00398	0.10
4V7	12 00478	0.10
5V1	12 00518	0.10
5V6	12 00568	0.10
6V8	12 00688	0.10
8V2	12 00828	0.10
9V1	12 00918	0.10
10	12 01008	0.10
11	12 01108	0.10
12	12 01208	0.10
15	12 01508	0.10
18	12 01808	0.10
22	12 02208	0.10
27	12 02708	0.10
33	12 03308	0.10

SCRS TRIACS

Type	Stock No	Price
BRY55 100	52 55100	0.50
C106D1	52 00106	0.70
C122D1	52 00122	1.45
2N6403	52 06403	2.22
2N6073A	58 06073	0.80

BALANCED MIXERS

Type	Stock No	Price
SBL1	12 00003	4.98
SBL1 8	12 00013	5.00
SBL1 X	12 00023	8.33
SRA1	12 00033	10.00
SRA1 1	12 00043	12.77
SRA1H	12 00053	10.34
SRA3	12 00063	15.35

LEDs

Standard 5mm DIA LEDs

Type	Stock No	Price
CQY40L Red	15 10400	0.12
CQY72L Green	15 10720	0.15
CQY74L Yellow	15 10740	0.15
CQX38A Dr-d	15 20380	0.20
CQX380 Dried	15 20380	0.21

LINEAR ICs

Type	Stock No	Price
LM10CN	61 00010	3.88
MF10	61 00011	5.05
L149	61 00149	1.88
ZNA234	61 02340	0.50
U237B	61 00237	1.20
U247B	61 00247	1.20
U257B	61 00252	1.20
U267B	61 00767	1.20
LM301AH	61 03010	0.67
LM301AN	61 03011	0.27
LM308H	61 03080	0.74
LM308CN	61 03081	0.65
LM324	61 03240	0.45
LM339N	61 03390	0.40
LF347	61 00347	1.00
LM348	61 03480	0.80
LF351	61 03510	0.40
LF353	61 03530	0.70
LM380N	61 00380	1.00
LM381	61 00381	1.01
LM382	61 00382	1.01
ZN419CE	61 00419	1.90
ZNA423	61 04230	1.00
ZN425E-8	61 04250	3.50
ZN428E-8	61 04280	3.00
ZN427E-8	61 04270	0.20
ZN428E-8	61 04280	0.20
ZN429E-8	61 04290	2.10
ZN432CJ10	61 04320	20.00
ZN433CJ10	61 04330	22.50
ZN440J	61 04400	0.80
ZN450E	61 04500	7.81
NE542	61 05420	1.20
NE544	61 00544	1.00
NE555N	61 05550	0.20
NE556N	61 05560	0.50
SL560C	61 05600	1.91
NE562	61 00562	4.05
NE564	61 00564	4.29
NE565	61 00565	1.00
NE566	61 00566	1.30
NE567	61 00567	1.30
NE570N	61 00570	3.85
SL624	61 00624	3.20
uA709HC	61 07090	0.64
uA709PC	61 07091	0.30
uA710HC	61 07100	0.64
uA710PC	61 07101	0.50
uA711CN	61 07110	0.65
uA733CN	61 07330	0.80
uA741CN	61 07410	0.60
uA741CH	61 07411	0.20
uA747CN	61 07470	0.70
uA748CN	61 04780	0.30
uA758	61 00758	2.35
TBA820M	61 00820	0.76
TDA1028	61 01028	2.11
TDA1029	61 01029	2.11
ZNA1034	61 01034	2.10
LM1035	61 01034	2.10
TDA1054M	61 01054	1.45
TDA1062	61 01062	1.95
TDA1072	61 01072	2.61
TDA1074A	61 01074	0.84
TDA1083	61 01083	1.95
TDA1090	61 01090	3.05
HA1137	61 12411	1.20
HA1196	61 01196	2.00
HA1197	61 01197	1.00
TDA1220	61 01220	1.40
LM1303	61 01303	0.99
LM1307	61 01307	1.56
MC1310P	61 01310	1.90
MC1330	61 01330	1.20
MC1350	61 01350	1.20
HA1370	61 11370	1.90
HA1388	61 01388	2.75
LM1458N	61 14580	0.65
MC1496P	61 01496	1.25
SL1610	61 01610	1.82
SL1611	61 01611	1.40
SL1612	61 01612	1.80
SL1613	61 01613	2.00
SL1620	61 01620	2.50
SL1621	61 01621	2.50
SL1623	61 01623	2.44
SL1625	61 01625	2.50
SL1626	(SL6270)	
SL1630	61 01630	1.82
SL1640	61 01640	2.25
SL1641	61 01641	2.25
MC1648	61 01648	3.25
TDA2002	61 02002	1.25
ULN2240	61 02240	3.25
ULN2242	61 01080	3.05
ULN2283	61 02283	1.00
CA3080	61 03080	0.70
CA3089	61 03089	1.04
CA3123	61 03123	1.40
CA3130E	61 31300	0.80
CA3130T	61 31301	0.80
CA3140E	61 31400	0.40
CA3189E	61 03189	2.20
CA3240E	61 32400	1.27
MC3357	61 03357	2.45
MC3359 see ULN3859N		
ULN3859	61 03859	2.05
KM3701	61 03701	65.53
KM3702	61 03702	74.04
LM3900	61 39000	0.80
LM3909N	61 39090	0.80
LM3914N	61 03914	2.60
LM3915N	61 03915	2.80
KB4400	61 04400	0.80
KB4412	61 04412	1.95
KB4413	61 04413	1.95
KB4417	61 04412	1.80
KB4420B	61 04420	1.80
TDA4420	61 14420	2.05
TDA4421	61 14421	2.66
KB4423	61 04423	2.30
KB4424	61 04424	1.05
KB4430	61 04430	2.30
KB4431	61 04431	1.05
KB4432	61 04432	1.15
KB4433	61 04433	1.52
KB4436	61 04436	2.53
KB4437	61 04437	1.75
KB4438	61 04438	2.22
KB4441	61 04441	1.36
KB4445	61 04445	1.20
KB4446	61 04446	2.75
KB4448	61 04448	1.05
NE5044	61 05044	2.26
MC5229	61 05229	5.60
NE5532	61 55320	1.65
KM5624	61 05624	0.35
SD6000	61 08000	3.75
SL6270	61 06270	2.03
SL6310	61 06310	2.45
SL6440	61 06440	3.30
SL6600	61 06600	3.75
SAS6610	61 06610	1.44
SL6640	61 06640	2.75
SL6690	61 06690	3.75
SL6700	61 06700	2.75
SAS6710	61 06710	1.40
LS7225	61 07225	3.05
ICM7555	61 75550	0.80
CL8038CC	61 08038	4.50
MSL9362	61 09362	1.75
MSL9363	61 09363	1.75
K10170	61 10170	1.07
TK10321	61 10321	2.75
HA11223	61 11223	2.15
HA11225	61 11225	1.45
HA12002	61 12002	1.22
HA12017	61 12012	0.80
HA12402	61 12402	1.05
HA12411	61 12411	1.20
HA12412	61 12412	1.55
LF13741	61 13741	0.33
MK50366	61 50366	3.35
MK50375	61 50375	3.85
MM53200	61 53200	3.90

ALWAYS USE STOCK CODE WHEN ORDERING PLEASE.

VISA

RETAIL SHOP OPENING HOURS
Monday to Thursday 9.00-6.00
Friday 9.00-7.00 Saturday 9.00-5.30

Access

ALL PRICES SHOWN EXCLUDE VAT. P&P 60p per order.

AMBIT INTERNATIONAL DEPT.

200 North Service Road, Brentwood, Essex

TELEPHONE (STD 0277) 230909 TELEX 995194 AMBIT G POSTCODE CM14 4SG

RESISTOR FILE

Std E12 VALUES ¼w CARBON FILM 10Ω to 10MΩ

73 PRINTED ENVELOPES EACH CONTAINING 10 FULL SPEC, 5% RESISTORS COVERING THE E12 SERIES FROM 10Ω TO 10MΩ IN A SMART FLIP-TOP FILE FOR YOUR WORK BENCH **£8.50**

SUPER FILE. AS ABOVE BUT WITH 100 RESISTORS IN EACH ENVELOPE **£55.00**

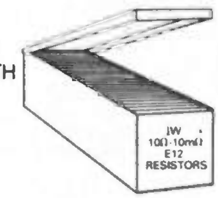

CHEQUES & P.O's PAYABLE TO: POPS COMPONENTS. PRICES ARE INCLUSIVE BUT ADD 60p P&P TO EACH ORDER

REFILL ENVELOPES CONTAINING 10×¼w RESISTORS ANY E12 VALUE FROM 10Ω TO 10MEGΩ **15p EACH**
CONTAINING 100×¼ RESISTORS ANY E12 **£1.20 EACH**

POPS COMPONENTS 38/40 LOWER ADDISCOMBE RD.
CALLERS WELCOME @ CROYDON, SURREY CR0 6AA
TEL: 688 2950

KEF

Constructor Series Speakers

IT'S SO EASY

Have fun, save money, building a Kef design with a Wilmslow Audio CS Total kit.

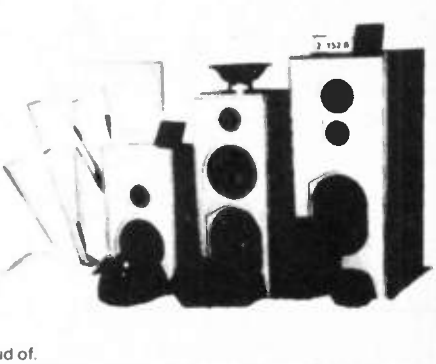

No electronic or woodworking knowledge necessary and the end result is a proven top-quality design that you'll be proud of.
Each kit contains all cabinet components, accurately machined for easy assembly, speaker drive units, crossovers, wadding, grille fabric, terminals, nuts, bolts, etc.
The cabinets can be painted or stained or finished with iron-on veneer or self adhesive woodgrain vynil.
Easy foolproof assembly instructions supplied. Set of constructor leaflets sent free on receipt of large S.A.E.

Prices: CS1	(As 101)	**£110** pr. inc. VAT, plus carr./ins.	£ 5.50
CS1A	(simplified LS3/5A)	**£103** pr. inc. VAT, plus carr./ins.	£ 5.50
CS3	(as 103.2)	**£129** pr. inc. VAT, plus carr./ins.	£10.00
CS5	(as Carlton II)	**£192** pr. inc. VAT, plus carr./ins.	£15.00
CS7	(as Cantata)	**£250** pr. inc. VAT, plus carr./ins.	£18.00

WILMSLOW AUDIO The firm for Speakers

☎ 0625 529599

35/39 Church Street, Wilmslow, Cheshire SK9 1AS

Catalogue — £1.50 post free

Lightning service on telephoned credit card orders!
Please allow 7 days for delivery.

Receivers & Components

NEW SURPLUS RELEASE

Ex GOVT LEAD ACID ACCUMULATORS. Brand new 10V 5ah famous manufacture. Easily tapped in 2v stages. Size only 7"×5"×2". Ideal for emergency lighting and power supplies. Burglar alarms etc. Must have cost Govt. over £20 each. Our price **£5.50** each, carriage £2.50. 2 for **£10** carriage £3.50 4 for **£18** carriage £6, 8 for **£32** carriage £10. All despatched unfilled. Robust wooden tray with carrying handles. Holds 8 accumulators **£5**.

CORDLESS INDUCTIVE LOOP HEADPHONES. Self powered. Input via loop or external min BNC socket. Contains transistorised high gain amplifier. Operates from internal batteries Noise excluding muffs. Switch on when placed on head. Special offer while stocks last **£6** p.p. £2. 2 pairs for **£12** post free.

LIGHTWEIGHT HEADSETS (Govt. release). Brand new 600 ohms impedance. A bargain at **£3.50** p.p. £1. 2 pairs for **£7** post free.

RIDICULOUS RESISTOR SALE. Brand new ¼ watt carbon film resistors. 5% tol. High quality resistors made to exacting specifications by automatic machines. E12 Range IRO to 10M in lots of 1000 (25 per value). Only **£8** per 1000. Lots of 5000 for **£35**. 1 RO to 10M. 1000 PCB type resistors **£2.50**. Bulk purchase enables us to offer 1000 mixed pre-formed carbon film resistors. 5% tol. for PCB mounting. Huge range of preferred values. **£2.50** per 1000. 4000 for **£8**. Postage 15p in £1.

GENUINE AFV TANK HEADSETS AND MIKE £3.50 per pair. p.p. £1. 2 pairs **£7** post free. All headphones fitted with Ex-ministry plug. Standard jack plugs available **25p** each 2 for **40p**. Headphone extension sockets available at **25p** each. 2 for **40p**. Impedance of first two items 600 ohms All headphones in good condition.

SCOOP PURCHASE

PYE POCKET PHONE RECEIVERS Type PF1 normal freo 450mHz. Supplied in used condition less battery. **£4.50** each. Carriage £1. 2 pairs **£9.00** post free. 4 pairs **£16.00** post free.

THE GOVT. SURPLUS WIRELESS EQUIPMENT HANDBOOK. Gives detailed information and circuit diagrams for British and American Government Surplus Receivers Transmitters and Test Equipment etc. Also suggested modification details and improvements for surplus equipment. Incorporated is a Surplus/Commercial cross referenced valve and transistors guide The standard reference work in this field. Only **£7.50** p.p £1.50. No VAT on books.

New release of **MODERN DYNAMIC MOVING COIL MICROPHONES.** 200 ohms impedance. Switch incorporated. Most with lead and DIN plug. Used but nice condition. 3 designs of case housing. Price one mike our choice **£2** plus 50p p.p Bargain offer all 3 mikes **£4.50** p.p. £1

GENUINE EX-GOVT COLLAPSIBLE AERIALS. A fully adjustable highly efficient whip aerial in 5 sections. Length 1½ metres Closed 300 m/m. Copper plated sections. As used on Ex Govt Manpacks. Brand new in makers boxes **£2.50** each, p.p. 75p 2 for **£5** post free.

HAVE YOU SEEN THE GREEN CAT. 1000× of new components, radio, electronic, audio at unbelievably low prices. Send 50p and receive catalogue and **FREE RECORD SPEED INDICATOR.**

MINI JUMBO PACK (£20 worth) for **£5** p.p. £1.50.
PLEASE ADD 15% VAT to all orders including carriage and p.p.

Myers Electronic Devices

Dept EE1, 12/14 Harper Street, Leeds LS2 7EA. Leeds 452045.
New retail premises at above address (opposite Corals). Callers welcome 9 to 5 Mon to Sat. Sunday 10 to 1 by appointment. **GOVT. SURPLUS ITEMS ALWAYS IN STOCK.**

Everyday ELECTRONICS

Reach effectively and economically to-days enthusiasts anxious to know of your products and services through our semi-display and classified pages. Semi-display spaces may be booked at £7·24 per single column centimetre (minimum 2·5cm). The prepaid rate for classified advertisements is 31 pence per word (minimum 12 words), box number 60p extra. All cheques, postal orders,

Receivers & Components

ELECTRONIC COMPONENTS MERSEYSIDE, Myca Electronics, 2 Victoria Place, Seasombe Ferry, Wallasey, L44 6NR. Mail order. Send 50p for price list refundable off first order. 051-638 8647.

AERIAL BOOSTERS trebles incoming signal, price £7.00. SAE leaflets. VELCO ELECTRONICS, Ramsbottom, Lancashire BL0 9AG

BUMPER BOX OF BITS

WOW!!! We've got so many components in stock, we can't possibly list them all!! – So buy a box, in it you'll find resistors, capacitors, displays, switches, panels with transistors, diodes, IC's etc, coils, pots . . . and so on. All modern parts – guaranteed at least 1000 items, minimum weight 10lbs. ONLY £8.50 inc.

ELECTRONICS WORLD
1d Dews Road, Salisbury, Wilts, SP2 7SN
(Prop: Westbrough Ltd)

VERO BOARD 0.1 PITCH, 95×292mm £3.50 each, 112×177mm £2.95 each. Prices inclusive of VAT, p&p 30p. Send cheque or PO with order to: Coxon Electronics, 47 Steepturnpike, Matlock, Derbyshire, DE4 3DP.

TURN YOUR SURPLUS capacitors, transistors etc., into cash. Contact Coles Harding & Co., 103 South Brink Wisbech, Cambs. 0945-584188. Immediate settlement.

Service Sheets

BELL'S TELEVISION SERVICE for service sheets on Radio, TV etc. £1.25 plus SAE. Colour TV Service Manuals on request. SAE with enquiries to BTS, 190 King's Rd., Harrogate, N. Yorkshire. Tel: 0423 55885.

ANY PUBLISHED, FULL-SIZE SERVICE SHEET by return £2 + LSAE. CTV/music centres £3. Repair data with all circuits, layouts, etc, your named TV or Video £8.50. Free 50p mag. All orders, queries—T.I.S. (E.E.), 76 Churches, Larkhall, Lanarkshire.

Miscellaneous

LEARN
ELECTRONICS WITHOUT SOLDER

Build electronic circuits without solder on a Roden S-Dec. This has built-in contacts and holes into which you plug your components. Suitable for all ages. Can be used time after time. Ideal gift for students or experimenters. Full instructions and 2 circuit diagrams with each S-Dec.

Send cheque or P.O. to:- Roden Products, Dep EE High March, Daventry, Northants, NN11 4QE **£4.70** including p & p

ORDER FORM PLEASE WRITE IN BLOCK CAPITALS

Please insert the advertisement below in the next available issue of **Everyday Electronics** for .....
Insertions. I enclose Cheque/P.O. for £ .....
(Cheques and Postal Orders should be crossed Lloyds Bank Ltd. and made payable to Everyday Electronics)

NAME .....

ADDRESS .....

.....

EVERYDAY ELECTRONICS
Classified Advertisement Dept., Room 2612, King's Reach Tower, Stamford Street, London SE1 9LS
Telephone 01-261 5942
Rate:
31p per word, minimum 12 words. Box No. **60p** extra.

Company registered in England. Registered No. 53626. Registered Office: King's Reach Tower, Stamford Street, London SE1 9LS. 3/83

AT YOUR SERVICE

etc., to be made payable to Everyday Electronics and crossed "Lloyds Bank Ltd." Treasury notes should always be sent registered post. Advertisements, together with remittance, should be sent to the Classified Advertisement Department, Everyday Electronics, Room 2612, IPC Magazines Limited, King's Reach Tower, Stamford St., London SE1 9LS. (Telephone 01-261 5942).

Miscellaneous Cont.

THE SCIENTIFIC WIRE COMPANY
PO Box 30, London E.4. 01 531 1568

SWG	1 lb	8 oz	4 oz	2 oz
ENAMELLED COPPER WIRE				
8 to 34	3.30	1.90	1.00	0.80
35 to 39	3.52	2.10	1.15	0.85
40 to 43	4.87	2.65	2.05	1.46
44 to 47	8.37	5.32	3.19	2.50
48 to 49	15.96	9.58	6.38	3.69
SILVER PLATED COPPER WIRE				
14 to 30	7.09	4.20	2.43	1.72
TINNED COPPER WIRE				
14 to 30	3.97	2.41	1.39	0.94
FLUXCORE SOLDER	5.75	3.16	1.73	0.96

Prices include P & P vat. Orders under £2 add 20p. SAE for list of copper and resistance wire. Dealer enquiries welcome.

DIGITAL WATCH REPLACEMENT PARTS. Batteries, displays, backlights, etc. Also reports, publications, charts. SAE for full list. PROFORDS, Copners Drive, Holmer Green, Bucks HP15 6SGA.

FREE
CATALOGUE OF BURGLAR
ALARM
EQUIPMENT
TOP QUALITY D.I.Y. SYSTEMS AND PARTS AT TRADE PRICES
SEND S.A.E. OR PHONE:
C-TEC SECURITY, Dept. EE, 60, MARKET ST, WIGAN
(0942) 42444

INGERSOLL PERSONAL STEREO FM/AM receiver features – individual volume controls, stereo beacon, fingertip tuning, feather-weight headphones, requires PP3 battery £12.95 p&p 80p. RADIO WATCH – normal size quartz L.C.D. watch combining AM radio complete with featherweight headphones, only £11.95 p&p 45p. TAITS MAIL ORDER, 31 Lime Grove, Addlestone, Surrey.

SILVER OXIDE BATTERIES
Save pounds on silver oxide and alkaline button cells. Fully guaranteed. e.g.: LR44 for Pentax ME Super camera only 42p each post free.
For FREE EQUIVALENTS CHART and price list send s.a.e. to:
H. M. WHEELER & CO.,
(Unit 1), 15 Hawthorn Crescent,
Bewdley, Worcs. DY12 2JE.

Courses

CONQUER THE CHIP—master modern electronics the practical way by seeing and doing in your own home. Write for your free colour brochure now to BRITISH NATIONAL RADIO & ELECTRONICS SCHOOL, Dept C3, Reading, Berks RG1 1BR.

HOW DARE THEY!

If you see an advertisement in the press, in print, on posters or a cinema commercial which makes you angry, write to us at the address below. (TV and radio commercials are dealt with by the I.B.A.)

The Advertising Standards Authority.
If an advertisement is wrong, we're here to put it right.
ASA Ltd, Brook House, Torrington Place, London WC1E 7HN.

INDEX TO ADVERTISERS

Alcon 130
Ambit 189
Audio Electronics 186
Bi-Pak 134, 135
B.K. Electronics ..... Cover III
B.N.R. & E.S. 188
Bull J. 132
C-Tec Security 191
Cambridge Learning 186
Cricklewood Electronics 131
Dziubas M. 192
Electrains 186
Electronics World 190
Electronize Design ..... Cover II
Electrovalue 169
Enfield Electronics 191
G.S.C. 183
Greenweld Electronics 130
H. M. Wheeler 191
I.C.S. 192
Magenta Electronics 187
Maplin Electronics ..... Cover IV
Myers Electronics Devices 190
Pops Components 189
R & TVC 136
Rapid Electronics 133
Roden Products 190
Scientific Wire Co. 191
Sinclair Products 184, 185
Sparkrite 175
Titan Transformers 191
T.K. Electronics 183
Wilmslow Audio 189

Universal NI-CAD, battery charger. All plastic case with lift up lid. Charge/Test switch. LED indicators at each of the five charging points.
Charges:- PP3 (9V), U12 (1·5V penlite), U11 (1·5V "C"), U2 (1·5V "D"). Power:- 220-240V AC. Dims:- 210 × 100 × 50mm. Knock down price only while stocks last.
Only £8.00
Order No. MW 398

Multitester & Transistor Tester
DC volts 0-1v-5v-2·5v-10v-50v-250v-1000v ±3%
AC volts 0-10v-50v-250v-1000v ±3%
DC current 0-50uA-2·5mA-25mA-0·25A ±3%
Resistance:
Minimum 0·2-2-200-200k ohms
Midscale 20-200-20k-200k ohms } ±3%
Maximum 2k-20k-2m-20m ohms
As a transistor tester
Leakage current 0-150uA at Z1k range
0-15mA at X10 range } ±5%
0-150mA at X1 range
PLEASE ADD 15% VAT & £1 P&P

Only £11.95
Order No. HT 320
Please allow 10 days delivery

ENFIELD ELECTRONICS 208 BAKER ST., ENFIELD, MIDDX. Tel: 01-366 1873

TITAN TRANSFORMERS
DUNCOMBE STREET, GRIMSBY, SOUTH HUMBERSIDE DN32 7EG.

INVERTERS
12/24 volt DC input from car battery to 240 volt AC output at 100, 250, 500 and 1000 VA.
Plus, powerlift, autocharger, powersaver, powermonitor, autochangeover and battery isolator as optional extras.

TRANSFORMERS
12/24 volt } Range
30/60 volt }
Autotransformers, safety isolating equipment P.C.B's etc.

BATTERY CHARGERS – 2 volt.

ADAPTORS
6 volt to 7·5 volt to 9 volt switchable. 300MA regulated
6 volt to 7·5 volt to 9 volt switchable. 250MA unregulated

Send SAE for prices and info. by return.
Mail Order Prompt Service

Make the connection with Access

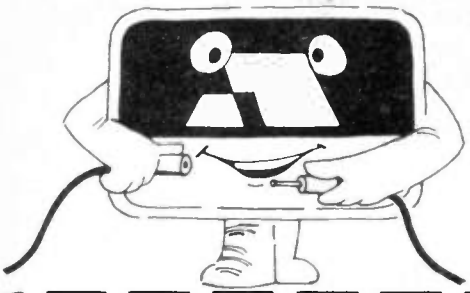

and receive a regular postal delivery of Everyday Electronics. It's easy, it's straightforward and it's quick. Just use the subscription order form to get your Access card account charged with the price of a subscription or order your subscription through Access on the phone: (01) 886 6433. If you pay by cheque or postal order, use the subscription order form in the usual way.

SUBSCRIPTION ORDER FORM

I wish to become a subscriber to **Everyday Electronics** for one year and enclose cheque/postal order value..... no..... made payable to IPC Magazines Ltd.

Complete this portion if you are using your Access card account. I authorise you to debit my Access card account with the above amount.

My Access no. is

(Block letters please)

Name

Address

Signature

Subscription Rates:

UK, Isle of Man, Channel Islands and Irish Republic £11

Overseas £12

Unless you are phoning your order, complete and post this order form to:
Everyday Electronics,
2613 King's Reach Tower,
Stamford Street,
London SE1 9LS.

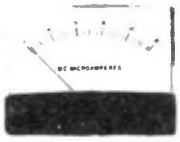

METERS: 110 × 82 × 35mm
30μA, 50μA, 100μA. £5·90. Post 50p.

METERS: 45 × 50 × 34mm
50μA, 100μA, 1mA, 5mA, 10mA, 25v, 1A, 2A, 5A 25V.
£2·90. Post 30p.

METERS: 60 × 47 × 33mm
50μA, 100μA, 1mA, 5mA, 10mA, 100mA, 1A, 2A, 25v, 50v, 50-0-50μA, 100-0-100μA. £4·76.
VU meters. £5·32.
Post on above meters 30p.

Silicone grease 50g £1·32 Post 14p.

NI-CAD BATTERY CHARGER
Led indicators charge-test switch. For PP3, HP7, HP11 & HP2 size batteries.
Price £5·85 Post 94p.

MULTI-METER
7N 360TR
20,000 ohm/volt
DC Volts: 0·1, 0·5, 2·5, 10-150—250-1,000v.
AC Volts: 10-50, 250-1,000
RESISTANCE RANGES X1, X10, X1K, X10K
£14·10
P.&P. 87p

TRANSFORMERS
240v Primary

3-0-3v	100mA	82p
6-0-6v	100mA	87p
6-0-6v	250mA	£1·22
12-0-12v	50mA	92p
12-0-12v	100mA	£1·15

Post on above transformers 48p.

9-0-9v	1A	£1·80
12-0-12v	1A	£2·40
15-0-15c	1A	£2·60
6·3v	1½A	£1·80
6-0-6v	1½A	£2·10

Post on above transformers 87p.

All above prices include V.A.T. Send 80p for new 1982 fully illustrated catalogue, S.A.E. with all enquiries. Special prices for quantity quoted on request.

All goods despatched within 3 days from receipt of the order.

M. DZIUBAS
158 Bradshawgate, Bolton
Lancs. BL2 1BA

FREE CAREER BOOKLET

Train for success, for a better job, better pay

Enjoy all the advantages of an ICS Diploma Course, training you ready for a new, higher paid, more exciting career.

Learn in your own home, in your own time, at your own pace, through ICS home study, used by over 8 million already!

Look at the wide range of opportunities awaiting you. Whatever your interest or skill, there's an ICS Diploma Course there for you to use.

Send for your FREE CAREER BOOKLET today—at no cost or obligation at all.

TICK THE FREE BOOKLET YOU WANT AND POST TODAY

ELECTRONICS ENGINEERING	☐	TV & AUDIO SERVICING	☐
ELECTRICAL ENGINEERING	☐	RUNNING YOUR OWN BUSINESS	☐

Name .....

Address .....

ICS
Division of National Education Corporation

ICS
Dept E629
160 Stewarts Road,
London SW8 4UJ

01-622 9911
(all hours)

Published approximately the third Friday of each month by IPC Magazines Ltd., Kings Reach Tower, Stamford St., London SE1 9LS. Printed in England by Chapel River Press, Andover, Hants. Sole Agents for Australia and New Zealand—Gordon and Gotch (A/Sia) Ltd. South Africa—Central News Agency Ltd. Subscriptions: Inland £12.00, Overseas £13.00 per annum payable to IPC Services, Oakfield House, Pettymount Road, Haywards Heath, Sussex. Everyday Electronics is sold subject to the following conditions namely that it shall not, without the written consent of the Publishers first given, be lent, resold, hired out or otherwise disposed of by way of Trade at more than the recommended selling price shown on cover, and that it shall not be lent, resold, or hired out or otherwise disposed of in a mutilated condition or in any unauthorised cover by way of Trade, or affixed to or as part of any publication or advertising, literary or pictorial matter whatsoever.

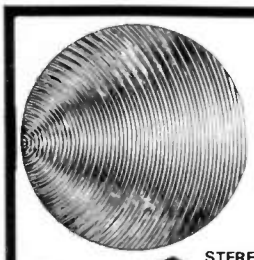

APPROVED thandar STOCKIST

B.K. ELECTRONICS
A SOUND CHOICE

APPROVED thandar STOCKIST

★ PROMPT DELIVERY ★ PRICES INCLUDE V.A.T. ★ AMPLE STOCKS
A PERSONAL SERVICE FROM A SMALL EXPANDING COMPANY

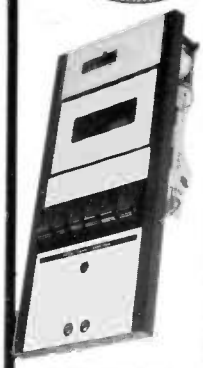

6 piano type keys

STEREO CASSETTE TAPE DECK MODULE
Comprising of a top panel and tape mechanism coupled to a record/play back printed board assembly. Supplied as one complete unit for horizontal installation into cabinet or console of own choice. These units are brand new, ready built and tested.
Features: Three digit tape counter. Autostop. Six piano type keys, record, rewind, fast forward, play, stop and eject. Automatic record level control. Main inputs plus secondary inputs for stereo microphones. **Input Sensitivity:** 100mV to 2V. **Input Impedance:** 68K. **Output level:** 400mV to both left and right hand channels. **Output Impedance:** 10K. **Signal to noise ratio:** 45dB. **Wow and flutter:** 0.1%. **Power Supply requirements:** 18V DC at 300mA. **Connections:** The left and right hand stereo inputs and outputs are via individual screened leads, all terminated with phono plugs (phono sockets provided). **Dimensions:** Top panel 5½in × 11¾in. Clearance required under top panel 2½in. Supplied complete with circuit diagram and connecting diagram. Attractive black and silver finish.
Price £26.70 + £2.50 postage and packing.
Supplementary parts for 18V D.C. power supply (transformer, bridge rectifier and smoothing capacitor) **£3.50.**

1 K-WATT SLIDE DIMMER
★ Controls loads up to 1KW.
★ Compact Size 4¾" × 1⅞" × 2½".
★ Easy snap in fixing through panel/cabinet cut out.
★ Insulated plastic case.
★ Full wave control using 8 amp triac.
★ Conforms to BS800.
★ Suitable for both resistance and inductive loads. Innumerable applications in industry, the home, and disco's/theatres, etc.
Price £11.70 each + 50p P&P. (Any quantity.)

PANTEC

HOBBY KITS. PROVEN DESIGNS INCLUDING GLASS FIBRE PRINTED CIRCUIT BOARD AND HIGH QUALITY COMPONENTS COMPLETE WITH INSTRUCTIONS.
FM MICROTRANSMITTER (BUG). 90/105MHz with **very** sensitive microphone. Range 100/300 metres. 57 × 46 × 14mm (9 volt). Price: **£6.58.**
DIGITAL THERMOMETER. −9.9°C to +99.9°C. LED display. Complete with sensor. 70 × 70mm (9 volt). Price: **£22.94.**
3 WATT FM TRANSMITTER. 3 watt. 85/115MHz varicap controlled. Professional performance. Range up to 3 miles. 35 × 84 × 12mm (12 volt). Price: **£10.64.**
SINGLE CHANNEL RADIO CONTROLLED TRANSMITTER/RECEIVER. 27MHz. Range up to 500 metres. Double coded modulation. Receiver output operates a relay with 2amp/240V contacts. Ideal for many applications. Receiver 90 × 70 × 22mm (9/12 volt) Price: **£14.38.** Transmitter 80 × 50 × 15mm (9/12 volt) Price: **£9.15.** P & P ALL KITS + 50p. S.A.E. for complete list.

LOUDSPEAKERS

15" 100 watt R.M.S. (HI-FI, P.A., BASS GUITAR). Die cast chassis, 2" aluminium voice coil, white cone with aluminium centre dome. 8 ohm imp., Res. Freq. 20Hz., Freq. Resp. to 2.5KHz., Sens. 97dB. (As photograph). Price: **£32.00** + £3.00 carriage.

12" 100 watt R.M.S. (HI-FI). Die cast chassis. 2" aluminium voice coil. Black cone. 8 ohm imp. Res. Freq. 20Hz., Freq. Resp. to 4.5KHz. Sens. 95dB. (As photograph). Price: **£23.50** + £3.00 carriage.

8" 50 watt R.M.S. (HI-FI, P.A.). 1½" aluminium voice coil. White cone. 8 ohm imp. Res. Freq. 40Hz., Freq. Resp. to 6KHz. Sens. 92dB. Also available with black cone fitted with black metal protective grille. (As photograph). Price: White Cone **£8.90**, Black Cone/Grille **£9.50** P & P £1.25.

12" 85 watt R.M.S. McKENZIE C1285GP (LEAD GUITAR, KEYBOARD, DISCO). 2" aluminium voice coil, aluminium centre dome, 8 ohm imp., Res. Freq. 45Hz., Freq. Resp. to 6.5KHz., Sens. 98dB. Price: **£22.00** + £3.00 carriage.

12" 85 watt R.M.S. McKENZIE C1285TC (P.A., DISCO). 2" aluminium voice coil. Twin cone. 8 ohm imp. Res. Freq. 45Hz., Freq. Resp. to 14KHz. Price: **£22.00** + £3.00 carriage.

15" 150 watt R.M.S. McKENZIE C15 (BASS GUITAR, P.A.) 3" aluminium voice coil. Die cast chassis. 8 ohm imp. Res. Freq. 40Hz., Freq. Resp. to 4KHz.. Price: **£47.00** + £4.00 carriage.

PIEZO ELECTRIC TWEETERS – MOTOROLA
Join the Piezo revolution. The low dynamic mass (no voice coil) of a Piezo tweeter produces an improved transient response with a lower distortion level than ordinary dynamic tweeters. As a crossover is **not** required these units can be added to existing speakers systems of up to 100 watts (more if 2 put in series). **FREE EXPLANATORY LEAFLETS SUPPLIED WITH EACH TWEETER.**

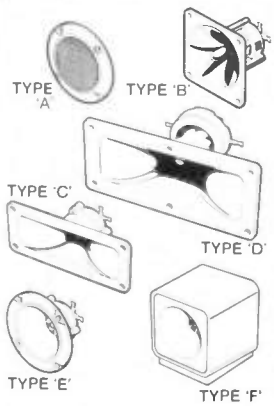

TYPE 'A' (KSN1036A) 3" round with protective wire mesh, ideal for bookshelf and medium sized Hi-Fi speakers. Price **£3.45 each.**

TYPE 'B' (KSN1005A) 3½" super horn. For general purpose speakers, disco and P.A. systems, etc. Price **£4.35 each.**

TYPE 'C' (KSN6016A) 2" × 5" wide dispersion horn. For Hi-Fi systems and quality discos, etc. Price **£5.45 each.**

TYPE 'D' (KSN1025A) 2" × 6" wide dispersion horn. Upper frequency response retained extending down to mid range (2,000 c/s). Suitable for Hi-Fi systems and quality discos. Price **£6.90 each.**

TYPE 'E' (KSN1038A) 3¾" horn tweeter with attractive silver finish trim. Suitable for Hi-Fi monitor systems, etc. Price **£4.35 each.**

TYPE 'F' (KSN1057A) Cased version of type 'E'. Free standing satellite tweeter. Perfect add on tweeter for conventional loudspeaker systems. Price **£10.75 each.**

U.K. post free (or SAE for Piezo leaflets).

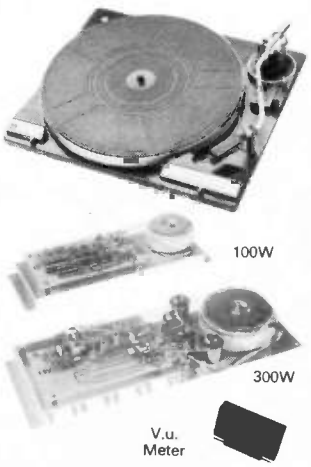

B.S.R. P232 TURNTABLE
P232 Turntable ★ 'S' shaped tone arm
★ Belt driven ★ Aluminium platter
★ Cueing lever ★ 240 volt AC operation (50Hz)
★ Cut-out template supplied
★ Used as standard by Hi-Fi and Disco manufacturers
★ Fitted with either a magnetic or ceramic cartridge, please state cartridge required
Price: **£22.50** + £2.50 P & P.

OMP

POWER AMPLIFIER MODULES
100 WATT R.M.S. AND 300 WATT R.M.S. MODULES
Power Amplifier Modules with integral toroidal transformer power supply, and heat sink. Supplied as one complete built and tested unit. Can be fitted in minutes. An LED Vu meter is available as an optional extra.
SPECIFICATION
Max Output Power:
110 watts R.M.S. (OMP 100)
310 watts R.M.S. (OMP 300)
Loads: Open and short circuit proof. 4-16 ohms
Frequency Response: 20Hz-25KHz ±3dB.
Sensitivity for Max. Output:
500mV at 10K (OMP 100) 1V at 10K (OMP 300)
T.H.D: Less than 0.1%.
Supply: 240V 50Hz
Sizes: OMP 100 360 × 115 × 72mm
OMP 300 460 × 153 × 66mm
Prices: OMP 100 **£31.50 each** + £2.00 P&P
OMP 300 **£89.00 each** + £3.00 P&P
Vu Meter **£6.50 each** + 50p P&P

MULLARD SPEAKER KITS

Purposefully designed 40 watt R.M.S. and 30 watt R.M.S. 8 ohm speaker systems recently developed by MULLARD'S specialist team in Belgium. Kits comprise **Mullard** woofer (8" or 5") with foam surround and aluminium voice coil. **Mullard** 3" high power domed tweeter. **B.K.E.** built and tested crossover based on Mullard circuit, combining low loss components, glass fibre board and recessed loudspeaker terminals. SUPERB SOUNDS AT LOW COST. Kits supplied in polystyrene packs complete with instructions. 8" 40W system—recommended cabinet size 240 × 216 × 445mm.
Price: **£14.90 each** + £2.00 P&P.
5" 30 W system—recommended cabinet size 160 × 175 × 295mm.
Price: **£13.90 each** + £1.50 P&P.
Designer approved flat pack cabinet kits, including grill fabric. Can be finished with iron on veneer or self-adhesive vinyl etc.
8" system cabinet kit. **£8.00** each + £2.50 P&P.
5" system cabinet kit. **£7.00** each + £2.00 P&P.

12" 80 watt R.M.S. loudspeaker
A superb general purpose **twin cone** loud-speaker. 50 oz. magnet. 2" aluminium voice coil. Rolled surround. Resonant frequency 25Hz. Frequency response to 13KHz. Sensitivity 95dB. Impedance 8 ohm. **Attractive blue cone with aluminium centre dome.**
Price: **£17.99 each** + £3.00 P & P.

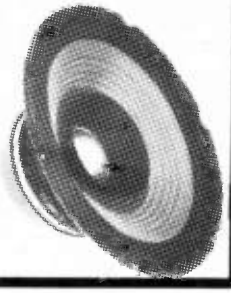

B.K. ELECTRONICS DEPT E.E.

VISA Access

37 Whitehouse Meadows, Eastwood, Leigh-on-Sea, Essex SS9 5TY

★ SAE for current lists. ★ Official orders welcome. ★ All prices include VAT. ★ Mail order only. ★ All items packed (where applicable) in special energy absorbing PU foam. Callers welcome by **prior** appointment, please phone 0702-527572.

SPEECH SYNTHESISER FOR ZX81 and VIC20

THE MAPLIN TALK-BACK

Now your computer can talk!

- ★ Allophone (extended phoneme) system gives unlimited vocabulary.
- ★ Can be used with unexpanded VIC20 or ZX81 — does not require large areas of memory.
- ★ In VIC20 version, speech output is direct to TV speaker with no additional amplification needed.
- ★ Allows speech to be easily included in programs.

Complete kit only £24.95.
Order As LK00A (VIC20 Talk-Back).
LK01B (ZX81 Talk-Back).
Full construction details in Maplin Projects Book 6.
Price 70p. Order As XA06G (Maplin Mag Vol. 2 No. 6).

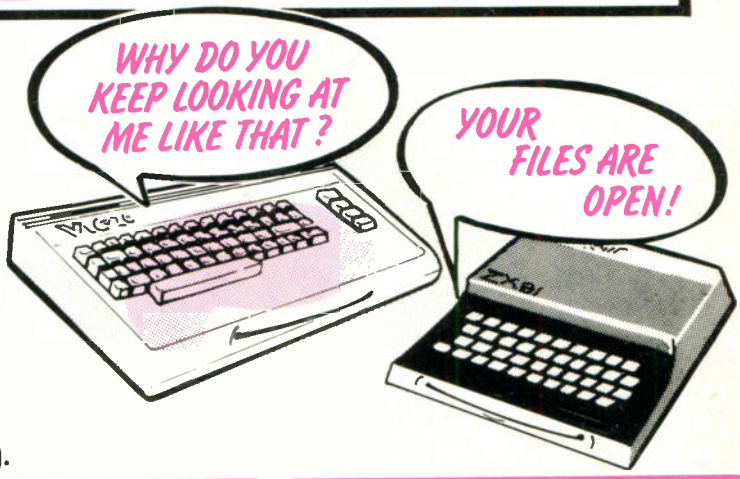

KEYBOARD WITH ELECTRONICS FOR ZX81

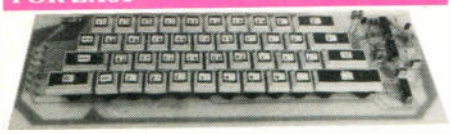

- ★ Full size, full travel keyboard that's simple to add to your ZX81 (no soldering in ZX81).
- ★ Complete with electronics to make "Shift Lock", "Function" and "Graphics 2" single key selections.
- ★ Powered (with adaptor supplied) from ZX81's own standard power supply.

Full details in Project Book 3 (XA03D) Price 60p.
Complete kit (excl. case) £19.95. Order As LW72P.
Case £4.95. Order As XG17T.
Ready built-in case £29.95. Order As XG22Y.

OTHER KITS FOR ZX81

3-Channel Sounds Generator (Details in Book 5).
Order As LW96E. Price £10.95.

ZX81 Sound On Your TV Set (Details in Book 6).
Order As LK02C. Price £19.95.

ZX81 I/O Port gives two bi-directional 8-bit ports (Details in Book 4).
Order As LW76H. Price £9.25.

ZX81 Extendiboard will accept 16K RAM and 3 other plug-in modules.
PCB: Order As GB08J. Price £2.32.
Edge Connectors (4 needed): Order As RK35Q. Price £2.39.

HOME SECURITY SYSTEM

Six independent channels – 2 or 4 wire operation. External horn. High degree of protection and long term reliability. Full details in Projects Book 2. (XA02C) Price 60p

MATINEE ORGAN

Easy-to-build, superb specification. Comparable with organs selling for up to £1000. Full construction details in our book (XH55K). Price £2.50. Complete kits available. Electronics (XY91Y) £299.95*. Cabinet (XY93B) £99.50*. Demo cassette (XX43W) £1.99.

*Carriage extra

25W STEREO MOSFET AMPLIFIER

- ★ Over 26W/channel into 8Ω at 1kHz both channels driven
- ★ Frequency response 20Hz to 40kHz ± 1dB.
- ★ Low distortion, low noise and high reliability power MOSFET output stage.
- ★ Extremely easy to build. Almost everything fits on main pcb, cutting interwiring to just 7 wires (plus toroidal transformer and mains lead terminations).
- ★ Complete kit contains everything you need including pre-drilled and printed chassis and wooden cabinet.

Full details in Projects Book 3. Price 60p (XA03D).
Complete kit only £49.95 incl. VAT and carriage (LW71N).

BUY IT WITH MAPCARD

Send now for an application form — then buy it with MAPCARD. MAPCARD gives you real spending power – up to 24 times your monthly payments, instantly.

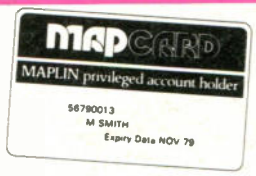

MAPLIN'S FANTASTIC PROJECTS

Full details in our project books. Issues 1 to 5: 60p each. Issue 6: 70p.

In Book 1 (XA01B) 120W rms MOSFET Combo-Amplifier ● Universal Timer with 18 program times and 4 outputs ● Temperature Gauge ● Six Vero Projects.

In Book 2 (XA02C) Home Security System ● Train Controller for 14 trains on one circuit ● Stopwatch with multiple modes ● Miles-per-Gallon Meter.

In Book 3 (XA03D) ZX81 Keyboard with electronics ● Stereo 25W MOSFET Amplifier ● Doppler Radar Intruder Detector ● Remote Control for Train Controller.

In Book 4 (XA04E) Telephone Exchange for 16 extensions ● Frequency Counter 10Hz to 600MHz ● Ultrasonic Intruder Detector ● I/O Port for ZX81 ● Car Burglar Alarm ● Remote Control for 25W Stereo Amp.

In Book 5 (XA05F) Modem to European standard ● 100W 240V AC Inverter ● Sounds Generator for ZX81 ● Central Heating Controller ● Panic Button for Home Security System ● Model Train Projects ● Timer for External Sounder.

In Book 6 (XA06G)* Speech Synthesiser for ZX81 & VIC20 ● Module to Bridge two of our MOSFET Amps to make a 350W Amp ● ZX81 Sound on your TV ● ZX81 Interface for Modem ● Scratch Filter ● Doorbell for Deaf ● Simple FM Tuner* ● Damp Meter*.

**Projects for Book 6 were in an advanced state at the time of writing, but contents may change prior to publication (due 11th February 1983).*

MAPLIN'S NEW 1983 CATALOGUE

Over 390 pages packed with data and pictures and all completely revised and including over 1000 new items. On sale in all branches of **WH SMITH** Price **£1.25**.

All prices include VAT & carriage. Please add 50p handling charge to orders under £5 total value.

Post this coupon now!
Please send me a copy of your 1983 catalogue. I enclose £1.50 (inc p&p). If I am not completely satisfied I may return the catalogue to you and have my money refunded. If you live outside the U.K. send £1.90 or 10 International Reply Coupons. Despatched by return of post.

Name

Address

EE

MAPLIN

MAPLIN ELECTRONIC SUPPLIES LTD.
P.O. Box 3, Rayleigh, Essex SS6 8LR
Telephone: Sales (0702) 552911 General (0702) 554155
Shops at: Note: Shops closed Mondays
159 King St., Hammersmith, London W6. Telephone: 01-748 0926
284 London Rd., Westcliff-on-Sea, Essex. Telephone: (0702) 554000
Lynton Square, Perry Barr, Birmingham. Telephone: (021) 356 7292