Kelly

Electronic Engineering

Incorporating . . . ELECTRONICS, TELEVISION & SHORT WAVE WORLD

VOL. 21 No. 253 MARCH 1949 PRICE 2/-


MORGANITE RESISTORS

TYPES T & R

ONLY TWO SIZES REQUIRED.
SIMPLIFY YOUR STOCK KEEPING PROBLEMS
SMALL SIZE WITH HIGH LOAD CARRYING CAPACITY

MORGANITE RESISTORS LIMITED
PAULSWAY, BEDE TRADING ESTATE, JARROW, COUNTY DURHAM.
TELEPHONE: JARROW 67136. TELEGRAMS: MORGANITE JARROW.

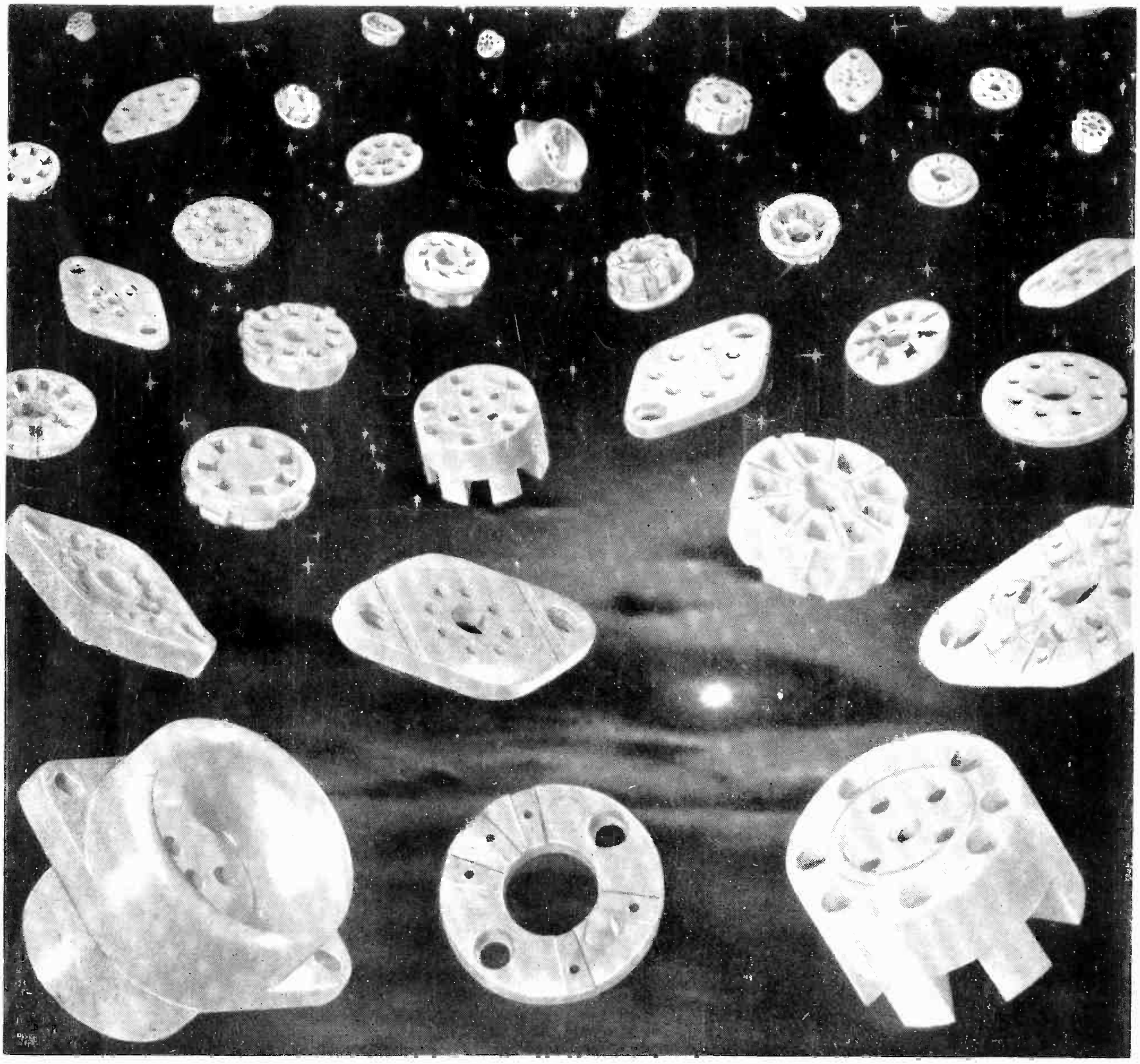

CERAMICS FOR VALVE HOLDERS
and all radio components
FREQUENTITE — FARADEX — TEMPRADEX

STEATITE & PORCELAIN PRODUCTS LTD.

Stourport on Severn, Worcester   Telephone: Stourport 111   Telegrams: Steatain, Stourport

S.P.55

CLASSIFIED ANNOUNCEMENTS

The charge for these advertisements is twelve words or less 5/- and 4d. for every additional word. Box number 2/- extra, except in the case of advertisements in "Situations Wanted" when it is added free of charge. A remittance must accompany the advertisement. Replies to box numbers should be addressed to: Morgan Bros. (Publishers) Ltd., 28, Essex Street, Strand, London, W.C.2 and marked "Electronic Engineering." Advertisements must be received before the 10th of the month for insertion in the following issue.

OFFICIAL APPOINTMENTS

acancies advertised are restricted to persons or employ-ents excepted from the provisions of the Control of ngagement Order, 1947.

OYAL NAVY. Short Service Commissions in the lectrical Branch. Short Service Commissions of five ears are offered in the Electrical Branch of the Royal avy to ex-R.N.V.R. officers under 35 years of age on t January, 1949, who served in the Torpedo, Special, lectrical or Air Branches and were employed on chnical duties connected with radar, wireless, air dio, air electrical or ships' electrical equipments. andidates will be entered in the substantive rank held n release, with seniority adjusted by the time out of he Service. Promotion will be in accordance with he regulations in force at the time for R.N. officers .g. a Lieutenant (L) is at present eligible for promotion Lieutenant-Commander (L) at eight years' seniority). fficers who complete the full period of five years on e Active List will be eligible for a gratuity of £500 ax free). Daily rates of pay are as follows:—ub-Lieutenant (L), 13s.; Lieutenant (L) on pro-otion, 17s., after two years, 19s., after four years 4s., after six years, £1 6s.; Lieutenant-Commander .) on promotion, £1 12s., thence in biennial increments 2s. per day to a maximum of £2 2s. Marriage llowance of £337 per annum if aged 25 or over, or 46 if under 25, is payable, and accommodation and tions are provided free, or allowances in lieu. pply to the Director, Naval Electrical Department, dmiralty, Queen Anne's Mansions, London, S.W.1, r fuller details and application forms.

.B.C. invites applications for a post in the Recording ction of the Research Department based initially at alham, London, S.W.12, and later at Kingswood, rrey. Applicants must possess a University Degree Electrical Engineering or equivalent qualifications ch as Graduate Membership of the Institution of lectrical Engineers. The successful candidate will be nployed upon research and development work on all pects of sound recording. Familiarity with low equency electronic technique is essential. A know-dge of music and the design of light electrical and echanical equipment together with ability to guide evelopment work in drawing office and workshops will an advantage. The salary is in a grade rising by nnual increments of £35 to a maximum of £785 per nnum. Applications stating age, qualifications and perience should reach the Engineering Establishment fficer, Broadcasting House, London, W.1, within days of the appearance of this advertisement.

HE MINISTRY OF SUPPLY invites applications r unestablished appointments as Engineer III. uties are to prepare official text books, handbooks d other technical publications on the following bjects from information obtained from research, esign, manufacturing and other sources:—(1) The rinciples, application and effectiveness of air weapons Ref. C.13/49A.) (2) Airborne and ground centimetric dar equipment, theory and practice (Ref. D.15/49A.)) Modern teleprinter and associated equipment Ref. D.16/49A.) (4) Modern aircraft gun, bomb and rpedo sights and navigation instruments including ectronics, theory and practice. (Ref. D.17/49A.) 5) Modern A.C. and D.C. airborne and ground elec-rical equipment for aircraft, including electronics, heory and practice (Ref. D.18/49A). Candidates who ust be of British nationality, born of British parents see detailed regulations, copy of which can be obtained n application to Ministry of Supply, Room 432, delphi, John Adam Street, Strand, W.C.2) should ave served an engineering apprenticeship and either e Associate Fellows of the Royal Aeronautical Society r Corporate Members of one of the Institutions of ivil, Mechanical or Electrical Engineers or have assed examinations recognised by any of these institutions as granting exemption from sections A nd B of their examinations for Associate Membership. lternatively they may have an Honours Degree in Physics or Associateship of the Institute of Physics nd have had at least three years' experience in a actory or industrial laboratory. They should have roved ability to teach scientific and technical subjects r experience in writing or editing text books or other echnical publications. Preference will be given to pplicants who have had several years' experience with he techniques or apparatus mentioned, either in esearch, design, production or operational use. alary range £330/470–£720. (Commencing salary will be determined in relation to age and experience.) Write to the Ministry of Labour and National Service, Technical and Scientific Register (K), York House, Kingsway, London, W.C.2, for application forms which must be completed within 10 days of the date of this advertisement.

THE MINISTRY OF SUPPLY invites applications from:—Electrical, Electronic Engineers (Ref. D6/49A); Mechanical and Aeronautical Engineers (Ref. C12/49A) for posts in the following grades at the Royal Aircraft Establishment, Farnborough and other research and development establishments in S. England and the Midlands:—Senior Experimental Officer, salary range £705–£805; Experimental Officer, £495–£645; Assistant Experimental Officer, £220 (at age 18)–£460. Rates for women are somewhat lower. Selected candidates will be engaged on duties connected with aircraft structure and performance, aerodynamics, armaments, combustion, jet propulsion, projectiles, radio and radar, electronic techniques, measurements, instruments and instrumentation, control gear, etc. Applicants should have practical experience in one of these fields and possess at least Higher National Certificate or Higher School Certificate or equivalent, in mathematics or a science or engineering subject. The posts are unestablished but opportunities to compete for established posts may occur later. Application forms obtainable from Technical and Scientific Register (K), York House, Kingsway, London, W.C.2, quoting appropriate reference above. Closing date 21 days from date of publication.

THE MINISTRY OF SUPPLY invites applications for unestablished appointments as Technical Author II or Technical Author III. Candidates, who must be of British nationality, born of British parents, must have attained a good general standard of education and be able to provide evidence of a sound technical training, a recognised apprenticeship, and practical experience in aeronautical, mechanical, electrical or radio engineering. Duties of the post are; preparation of technical publications, writing of descriptive notes, compilation of instructions on servicing, maintenance and repair, on aircraft and associated equipment used by the Royal Air Force and the Royal Navy. The subjects include: airframes, aero-engines and all associated airborne and ground equipment (armament, instruments, electrical, radar and telecommunications, electronics, propellers, hydraulics, pneumatics, general mechanical engineering, marine craft, photographic, chemistry of explosives, etc.). Salary range: Technical Author II, £470–£595; Technical Author III, £380–£495. Written applications, stating age, name and address of present employer and full particulars of experience, in chronological order, to the London Appointments Officer, Ministry of Labour and National Service, 1-6, Tavistock Square, London, W.C.1, quoting reference number KU. 27. In no circumstances should original testimonials be forwarded. Only candidates selected for interview will be advised.

SITUATIONS VACANT

MURPHY RADIO LTD., invite applications for the following vacancies in the Electrical Design Laboratory. (1) Senior Radio Engineer with good Honours Degree in Physics or Electrical Engineering and several years industrial experience in television or radio receiver development. (2) Radio Engineer with good academic qualifications in Physics or Electrical Engineering, preferably with some industrial experience. Apply to Personnel Dept., Murphy Radio Ltd., Welwyn Garden City, Herts.

PROMINENT ENGINEERING FIRM in North-West requires Senior Engineer having experience in development of centimetric radio aerials and wave-guide technique. Reply Box No. 427, E.E.

REQUIRED, several Senior Mechanical or Electrical Draughtsmen with experience in the design of mercury arc rectifiers, high vacuum plant or nuclear physics equipment. Manchester district. Five day week. Paid overtime. Salary according to experience. Apply giving qualifications—educational and training, and details of experience. Mark envelope "TTE." Box No. 448, E.E.

McMICHAEL RADIO LTD., require Senior Project Engineers in their Equipment Division Development Laboratory at Slough. These appointments are of a stable and progressive nature, satisfying the keenest appetite for the expression of initiative and the acceptance of responsibility. Training and experience in the field of Applied Electronics (including Communications) and experience of working with Government departments are the chief qualifications required. Salary will be commensurate with ability. Write stating age and full details of training, qualifications and experience to the Chief Engineer, Equipment Division, McMichael Radio Ltd., Slough. Bucks.

CONTINUED EXPANSION of the E.M.I. Electronics College has created further vacancies for lecturers in Radio Communications. Two lecturers whose duties will include some technical writing are required immediately. Applicants should possess a good Physics or Electrical Engineering Degree and also experience in radio, television, etc. Age 22–28. Commencing salary according to age qualifications and experience, not less than appropriate Burnham scale. Superannuation benefits in addition. Apply, giving fullest possible particulars to Professor H. F. Trewman M.A. (Cantab.) M.I.E.E., M.I.Mech.E., M.Brit.I.R.E., E.M.I. Institutes Ltd., 43, Grove Park Road, London, W.4. Tel.: CHIswick 4417/8.

BUSH RADIO LIMITED. Applications are invited from experienced radio engineers for the following positions: (a) Development work on communications and domestic radio receivers; (b) Development work on test gear for quality control television production and laboratory use. Apply in writing only, giving age, details of experience, qualifications, salary required, etc., to the Labour Manager, Bush Radio Ltd., Power Road, Chiswick, W.4.

SENIOR DESIGNER DRAUGHTSMAN required for department producing prototype models of electronic measuring equipment mainly for Government development contracts. Applicants must have ability to produce mechanical designs to electrical engineers' requirements and to act as liaison between laboratory and drawing office. Applications in writing stating full details to Personnel Manager, The Plessey Company Ltd., Ilford.

REQUIRED by a large engineering firm in Lancashire, Technicians experienced in the operation of high frequency induction equipment for the hardening of steel and for brazing, and in the construction of the necessary coil and quenching equipment. Write stating age, experience, and salary required to Box 457, E.E.

TESTERS required experienced in receiver, transmitter or electronic instrument testing for work in S.W. London area. Commencing salary according to experience and ability. Apply, Box E.E. 939, L.P.E., 110, St. Martin's Lane, W.C.2.

BRISTOL MENTAL HOSPITALS, Barrow Hospital. Applications are invited for the post of Electronic Engineer in the department of electro-encephalography and electrophysiology Candidates should be of Degree standing or its equivalent and preference will be given to applicants with experience in encephalography and physiology. Salary will be according to qualifications and experience. Applications should be addressed to the Medical Superintendent, Barrow Hospital, Barrow Gurney, near Bristol.

CAMBRIDGE UNIVERSITY department requires Technical Assistant in Electronics. Required (with minimum guidance) to design, construct and test electronic apparatus for research laboratory use. Salary probably in range £400-£500. Annual increments, marriage and child allowance, pension scheme. Dr. P. Bowden, Caius College, Cambridge.

WAYNE-KERR have a vacancy for a Design Draughtsman with varied experienced in the electronics field. Apply, stating qualifications and salary required to the Chief Draughtsman, The Wayne-Kerr Laboratories Ltd., New Malden, Surrey.

INDEX TO ADVERTISERS

SEE **PAGE 36**

CLASSIFIED ANNOUNCEMENTS (Cont'd.)

ELECTRON MICROSCOPIST required for research connected with new developments in powder metallurgy. Applicants must hold a University Degree in Natural Science and should have some practical experience of electron microscope technique. Instrument available is a Console R.C.A. E.M.C.2. The post is in Northamptonshire. Salary according to experience. Please state full details to Box 455, E E.

RADIO TESTER required for radar and special electronic instruments. Technical qualifications to N.C. or C. & G. standard. Write Box S/5778, A.K. Advg., 212a, Shaftesbury Avenue, W.C.2.

E. K. COLE LTD. (Malmesbury Division), invites applications from Electronic Engineers for permanent posts in development laboratories engaged on long-term projects involving the following techniques:—(1) Pulse generation and transmission; (2) Servo mechanisms; (3) Centimetric and V.H.F. systems; (4) Video and feedback amplifiers. There are vacancies in the Senior Engineer, Engineer, and Junior Grades. Candidates should have had at least 3 years' industrial experience in the above types of work, together with educational qualifications equivalent to A.M.I.E.E. examination standard. Commencing salary and status will be commensurate with qualifications and experience. Excellent opportunities for advancement are offered, with entry into a superannuation scheme after a period of service. Forms of application may be obtained from Personnel Manager, EKCO Works, Malmesbury, Wilts.

PHYSICISTS AND ENGINEERS are required by Imperial Chemical Industries Limited in Merseyside area for work in connexion with the instrumentation and automatic control of chemical plants. Vacancies exist for staff on research and development work, as well as for Works Instrument Managers. Candidates, aged 21/35 must have First or Second Class Honours Degree in Physics or Engineering. Experience either in the Forces on radar or servo mechanisms, or in industry on plant control, would be an advantage. Suitable applicants not possessing the necessary amount of practical experience will be given additional training before being posted. Good prospects of advancement. Starting salary according to age, experience and qualifications. Apply, in writing and quoting E/31, to Staff Manager, Imperial Chemical Industries Limited, General Chemicals Division, Cunard Building, Liverpool, 3.

RADAR TECHNICAL WRITER of mature technical experience, capable of writing technical descriptive matter and technical handbooks, in co-operation with the appropriate development engineer, required by large light engineering company, East London district. Apply in writing, stating age, experience and salary required to Box 466, E.E.

RADIO MECHANIC required to make up prototype equipment in industrial electronic laboratory. Good prospects for keen man. Woking, Surrey, area. State experience, age and salary required to Box 467, E.E.

REQUIRED as technical assistant to Chartered Patent Agent in Patent Department of the General Electric Co. Ltd., at Research Laboratories, Wembley, Middx. A young man with an Honours Degree or similar qualifications and preferably with some experience or knowledge of radio engineering and electronics. Suitable opening for ex-R.A.F. Signals Officer. The assistant would receive training for qualification as a Chartered Patent Agent.. Apply by letter to the Director, stating age, academic qualifications and experience.

DRAUGHTSMEN are required by the Research Laboratories of the General Electric Co. Ltd., North Wembley, Middx., for work in the field of radio or telecommunications. Vacancies exist for seniors with several years experience as well as for more junior candidates. Apply to the Director, stating age, academic qualifications and experience. This advertisement is inserted by permission of the Ministry of Labour and National Service under the Control of Engagement Order, 1947

PHYSICISTS, Electrical Engineers, Works Chemists. Condenser and dielectric research and production. Experienced Senior and Junior Development Research Engineers and Draughtsmen for radio, electronics, television, radar, speakers, preference B.Sc., H.N.C. Also Inspectors, Repairers, Service Engineers etc. Technical Employment Agency, 179 Clapham Road, S.W.9. (BRIxton 3487.)

WANTED, ex-R.A.F. Radar Mechanics not below Senior N.C.O. rank, by the Government of India for service as civilian Radar Instructors in Royal Indian Air Force training schools in India on a contract basis for 3 years. Apply, Air Advisor's Department, Office of the High Commissioner for India in the United Kingdom, India House, Aldwych, London, W.C.2.

ELECTRICAL LABORATORY Assistant required for routine measurements of magnetic and other alloys. State experience and technical qualifications to Box 458, E.E. Good prospects.

REQUIRED.—A writer to originate technical literature for a large variety of communication products. Capable of preparing installation and operating instructions for radio communication schemes. Access to designers for original information would be available. Excellent opportunity for suitable applicant. Degree in Electrical Engineering or equivalent desirable; keenness and ability for writing and preparing drafts ready for printing essential. State age, qualifications and salary required to Box 459, E.E.

SENIOR DEVELOPMENT ENGINEERS required by large firm in the Midlands engaged in the development of radio communication equipment of various types. Applicants should be able to undertake the complete development to the production stage. Competitive salaries are offered to engineers having the necessary qualifications and experience. Quote age, qualifications and experience to Box 460, E.E.

SALES MANAGER required to take full charge of the marketing of a range of domestic television equipment for a large manufacturing company having world-wide connexions. Apply Box 456. E.E.

FIRM IN N.W. LONDON area, manufacturing a wide range of Industrial Instruments and Controls' has vacancy in its engineering laboratory for Assistant Development and Design Engineer. Applicants should preferably have a Degree, or equivalent, in Electrical Engineering, Mechanical Engineering or Physics, with a good knowledge of the fundamentals of radio technique. Work would include the development of electronic devices and servo mechanisms for industrial application, and practical design experience is desirable. Initial salary will be between £400 and £600 per annum, according to qualifications and experience. Write Box 461, E.E.

EDITORAL ASSISTANT required for "Electronic Engineering." Ability to write good English and wide reading of electronic and general scientific literature essential. A knowledge of make-up, proof correcting, etc. desirable. Applicants must be not less than 25 years of age and of good personality. Full particulars of education, experience, etc. should be sent by letter in the first place to the Staff Director, Morgan Brothers (Publishers) Ltd., 28, Essex Street, W.C.2.

METALLURGIST with University Degree required for research on new powder-metallurgy products. Applicants must have research or industrial experience of powder metallurgy. The post is in Northamptonshire. Salary according to experience and qualifications. State full details to Box 462, E.E.

SENIOR CHEMIST required by new chemical laboratory in Essex engaged on research in the electronic field. Applicant must have B.Sc. in Chemistry and not less than seven years experience of chemical research preferably in connexion with electronic engineering. A flat in the country will be available for the successful applicant. State full details of experience also age and salary required to Box 463, E.E.

ELECTRICAL ENGINEER or Physicist (Graduate or equivalent) with experience in the design of electronic instruments, required for research and development of optical instruments embodying a wide range of electronic equipment. Age-limit 35. Write to Hilger and Watts Ltd., Hilger Division, 98 St. Pancras Way, Camden Town, N.W.1.

DEVELOPMENT ENGINEER required for work on experimental types of cathode ray tubes. Applicants should have had practical experience in the design, development and manufacture of cathode ray tubes. Apply, giving details of qualifications, experience and salary required to Personnel Department, C/F, E.M.I. Factories Ltd., Blyth Road, Hayes, Middx.

TRANSFORMER Manufacturer of repute, London district, requires Chief Engineer. Experience in design of audio and power transformers. Write stating experience and salary. Box 468, E.E.

ELECTRONIC DEVELOPMENT ENGINEER wanted for the Australian Division of a large aircraft organisation. Minimum qualifications are Engineering or Physics Degree, with three years research and development experience. Single men preferred due to accommodation difficulties in Australia. Applications should give full details of education, experience and salary required. Box 465, E.E.

TELEVISION Assembly Line Foreman required by expanding manufacturer in North West London area. Applicants must have ability to organise female labour and have extensive and recent experience of quality mass production of television receivers. A permanent post and good salary for a man with the right qualifications. Box 464, E.E.

ELECTRONICS TECHNICIAN wanted by the Clinical Electrophysiology Unit, Department of Physiology, to design, construct and maintain equipment for clinical electro-encephalography and electrophysiological research. Must have wide knowledge of audio and radio frequency techniques, cathode ray oscillography and photographic recording. Workshop experience an advantage. Salary in range £360–£435, according to experience. Family allowance and superannuation. Apply in writing to the Secretary, Middlesex Hospital Medical School, London, W.1.

DESIGNER DRAUGHTSMAN required by a company engaged upon the design, development and production of electronic equipment, whose factory is within a 25 mile radius N.W. of London. Applicants must have served a recognised engineering apprenticeship or have had similar training. Academic qualifications to Senior National Certificate in Electrical Engineering or Mechanical Engineering standard or equivalent. Applications stating age, academic qualifications, experience and salary required should be made to Box No. 473 E.E.

APPLICATIONS ARE INVITED by a company situated within a 25 mile radius of London for the position of Senior Engineer to take charge of a laboratory engaged upon design, development and application of R.F. heating. Applicants should have an Honours Degree in Science and previous experience of the work upon which the laboratory is engaged. Salary £700 to £1,000 p.a. according to qualifications. Applications should be addressed to Box No. 472, E.E.

SITUATIONS WANTED

RADIO SERVICE ENGINEER, 35, Polish, City and Guilds Intermediate, Electrical College, B.I.E.T. course, laboratory experience, accepts any position offered, letters answered. Box 469, E.E.

CHIEF ELECTRONIC DESIGNER to well known company seeks new position. Specialist in welding control. Box No. 471, E.E.

EDUCATIONAL

A.M.I.E.E., City and Guilds, etc., on "NO PASS—NO FEE" terms. Over 95 per cent. successes. For full details of modern courses in all branches of Electrical Technology send for our 112-page handbook—FREE and post free. B.I.E.T. (Dept. 337B), 17, Stratford Place, London, W.1.

UNIVERSITY COLLEGE, SOUTHAMPTON. Diploma in Electronics. An advanced course of Honours Degree standard covering the entire field of Electronics, with special emphasis on Receiver Design and Line Technique, will commence at the beginning of October, 1949. The course will be full-time for one academic year. The College will grant a Diploma by examination to students who successfully complete the course. Entry qualification is normally a University Degree or its equivalent. Further details may be obtained from the Academic Registrar.

FUNDAMENTALS OF TELEVISION. Conference April 1st–2nd, at Department of Physics, Birmingham. Lecturers: Dr. Lubszynski "Television Cameras" (2 lectures); Mr. Merriman, "The Principles of Television Radio Relaying"; Dr. Moss, "An Engineering Approach to the Electron-Optics of Television Cathode Ray Tubes"; Dr. Garlick, "The Luminescent Screen of the Television Cathode Ray Tube." This course is of an advanced nature dealing with the latest developments. Of special interest to Physics Graduates or specialists in industry. Details from: Director, Extra-Mural Studies, University, Edmund Street, Birmingham, 3.

SERVICE

LOUDSPEAKER repairs, British, American, any make, moderate prices.—Sinclair Speakers, 12, Pembroke Street, London, N.1.

RADIO MANUFACTURERS can undertake development and assembly of radio or electronic equipment. Winding shop with vacuum impregnation plant. Ample space and labour available. Box 316, E.E.

CHASSIS, panels, racks and metal cabinets stock sizes or made to specification. Reosound Engineering and Electrical Company, Coleshill Road, Sutton Coldfield.

CLASSIFIED ANNOUNCEMENTS
continued on Page 4

Tufnol blocks and sheaves made by Messrs. Lewmar Engineering Co., Emsworth, Hants.

As light as a breeze in Summer, as strong as a Winter gale — Tufnol is an ideal material for marine components. Furthermore, Tufnol is unaffected by sea water and extreme climatic conditions.

Tufnol is used by engineers not only for marine components, however, but in thousands of other ways in every industry.

Our Engineers will gladly help you

TUFNOL

An ELLISON Product

TUFNOL LTD · PERRY BARR · BIRMINGHAM · 22B

216

CLASSIFIED ANNOUNCEMENTS (Cont'd.)

MISCELLANEOUS

WE WILL BUY at your price used radios, amplifiers, converters, test meters, motors, pick-ups. speakers, etc., radio and electrical accessories. Write, phone or call, University Radio Ltd., 22, Lisle Street London, W.C.2. GERrard 4447.

FOR SALE

WEBB'S 1948 Radio Map of World, new multi-colour printing with up-to-date call signs and fresh information; on heavy art paper, 4s. 6d., post 6d. On linen on rollers, 11s. 6d. post 9d.

IN STOCK. Rectifiers, Accumulator Chargers, Rotary Converters, P.A. Amplifiers, Mikes, Mains Transformers, Speakers of most types, Test Meters, etc. Special Transformers quoted for.—University Radio, Ltd., 22, Lisle Street, London, W.C.2. GERrard 4447.

TELEVISION E.H.T. TRANSFORMERS in stock: 5KV, 4V, 1.5A, rect. guaranteed. C.O.D. or C.W.O. at 3 gns. each, post 1s. 6d. R. F. Gilson Ltd., 11a, St. George's Road, Wimbledon, S.W.19.

COPPER WIRES: enamelled, tinned, Litz, cotton, silk covered. All gauges. B.A. screws, nuts, washers, soldering tags, eyelets. Ebonite and laminated Bakelite panels, tubes. Paxolin coil formers. Tufnol rod. Permanent detectors, etc. List S.A.E. Trade supplied. Post Radio Supplies, 33, Bourne Gardens, London, E.4.

COPPER WIRE, enamelled, synthetic, covered, tinned, flex, sleeving, etc. S.A.E. list. Armes, 37, Birchwood Drive, Leigh-on-Sea.

A QUANTITY of Type 100R Variacs 2 KVA. Thoroughly inspected and tested. 8 gns. each, carriage extra. Box No. 452, E.E.

FELICITY " Extended Range " 8 watt amplifiers are now available with remote tone control unit standard amplifier, price £27 10s., or with remote control unit and 42 in. lead extra 30s. Full details from F.S.R. Ltd., 87a, Upper Richmond Road, London, S.W.15.

MUST SELL, " Proceedings I.R.E. (U.S.A.) " 1947, 1948 complete, 27 issues 1944-1946. " Wireless Engineer " July 1932–October, 1939 complete. Offers, whole or part, to 44 Hollingbourne Road, Herne Hill. S.E.24.

EXPRESSLY DESIGNED by S. S. West for viewers on the fringe of the service area, and for long distance viewing, the Spencer West type AC/2 television pre-amplifier is earning the respect of satisfied users. It is confidently offered on approval against cash. Price 10 gns. complete. Spencer West, Quay Works, Great Yarmouth.

8-WAY HIGH VOLTAGE " Jones " type Plugs and Sockets, with crackle covers, 1s. 6d. pair complete, 12s. dozen pairs, £3 10s. per 100 pairs, carriage paid. Jack Porter Ltd., College Street, Worcester.

THE ENOCK PICK-UP is now available from stock. Moving coil (licensed under Patent No. 538.058, others pending) with precision made polished, diamond stylus. Weight at needle point, 5/8 oz. No resonances within the recorded range. Price £29 5s. inc. tax. Full particulars from Joseph Enock Ltd., 273a, High Street, Brentford, Middlesex. EALing 8103.

THE MORDAUNT DUPLEX REPRODUCER, as used in the Enock Instrument. Folded horn bass unit and high note reflector of original design, giving exceptionally smooth response from 40-20,000 c/s. Even distribution over a wide angle. Reproduction has an " atmosphere " and realism hitherto unattainable. Price (ex works), 98 gns. In white wood skeleton form, £88. Please send for particulars, or better still let us demonstrate. Joseph Enock Ltd., 237a, High Street, Brentford, Middlesex. EALing 8103.

I.F.T's 465 Kc./s, 7s. 6d. pair, 3 W.B. coil pack kit, 9s. 6d.; 0.1+0.1+0.1 500 V. 6d.; 100 pF+100 pF, 2d.; eyelets, tags etc., 1s. gross; 0.3 amp. 820 ohm droppers, 2s. 3d.; mains transformers, 16s. 6d.; 50 pF trimmers, 4d; knobs, 4d. B.C. adaptors, 5d. Send for cheapest list in England. Sussex Electronics Ltd. (T) Riley Road, Brighton. Telephone 4446.

" ELECTRONIC ENGINEERING ": October 1945–December 1948. 39 copies. Offers to: Box 470, E.E.

WANTED

WANTED — Telephone and Telegraph Carrier Apparatus of all types in any condition. Wilson, 93, Wardour Street, W.1.

WANTED—Teletype apparatus parts and accessories of all kinds. Terry, Strouds, Pangbourne, Berks.

WANTED.—Western Electric or Standard Telephones parts; coils, transformers, condensers any condition. Please send full details and price. Harris, 93, Wardour Street, W.1.

WANTED.—Telephone and Telegraph Components or equipment in any condition. Please give full details and prices. Harris, 93, Wardour Street, W.1.

OPERATING INSTRUCTIONS required for Radar Set 1D-17/APN-3 365 C.R.V. 338-day-44. Singleton, 104 Whirlowdale Road, Sheffield, 7.

" THE RD JUNIOR "

A new amplifier designed to meet the needs of those who require high performance at a reasonable price.

Main Features:

- 6 valves, plus rectifier.
- 8-10 watts output, two PX4s in push-pull.
- Independent bass and treble tone controls.
- High gain compensated p.u. input stage.
- Frequency range 30-15,000 c.s., ± 1db.
- Provision for radio feeder unit.
- Ample negative feedback applied over three stages, including output transformer.
- High-grade components used throughout, including Partridge transformers and chokes.

Price complete - - - £19 10 0

Full details supplied on request

The new Barker 148A Loudspeaker, which we consider to be the finest baffle loaded speaker available, is now being demonstrated, and is available from stock.

ROGERS DEVELOPMENTS CO.,
106, Heath St., Hampstead, London, N.W.3
HAMpstead 6901

SULLIVAN-GRIFFITHS

DUAL DIAL NON-REACTIVE DECADE RESISTANCES

FOR ALL FREQUENCIES

NOVEL AND PATENTED

ACCURACY BETTER THAN 0.1%

Electrical Standards for Research and Industry

Testing and Measuring Apparatus for Communication Engineering

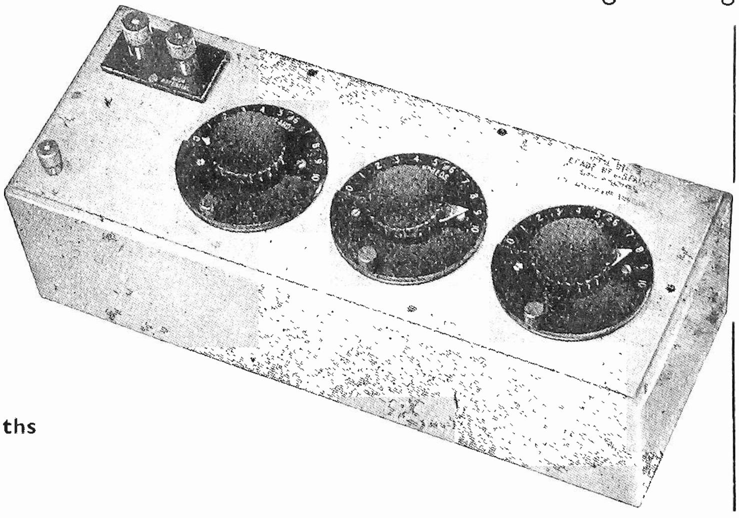

Screened Resistances of guaranteed accuracy exactly similar to our well-known Decade Resistances but specially arranged so that one box of a given number of dials gives many different values of maximum resistance. Thus a three dial box (as illustrated) may be used, for instance, for

three decades of **Thousands, Hundreds** and **Tens**
or three decades of **Hundreds, Tens** and **Units**
or three decades of **Tens, Units** and **Tenths**
or three decades of **Units, Tenths** and **Hundredths**

The advantages of such a system will be obvious, for in addition to the economy involved much space is saved and the residual resistance and inductance is much reduced.

The resistances are available in 3 dial, 4 dial and 5 dial types, with subdivision of 0.001% to 0.1% depending of course, on the number of dials incorporated.

H. W. SULLIVAN

—LIMITED—

LONDON, S.E.15

Telephone: New Cross 3225 (P.B.X.)

2756

Take a look inside the
ERIE Insulated
High Stability RESISTOR

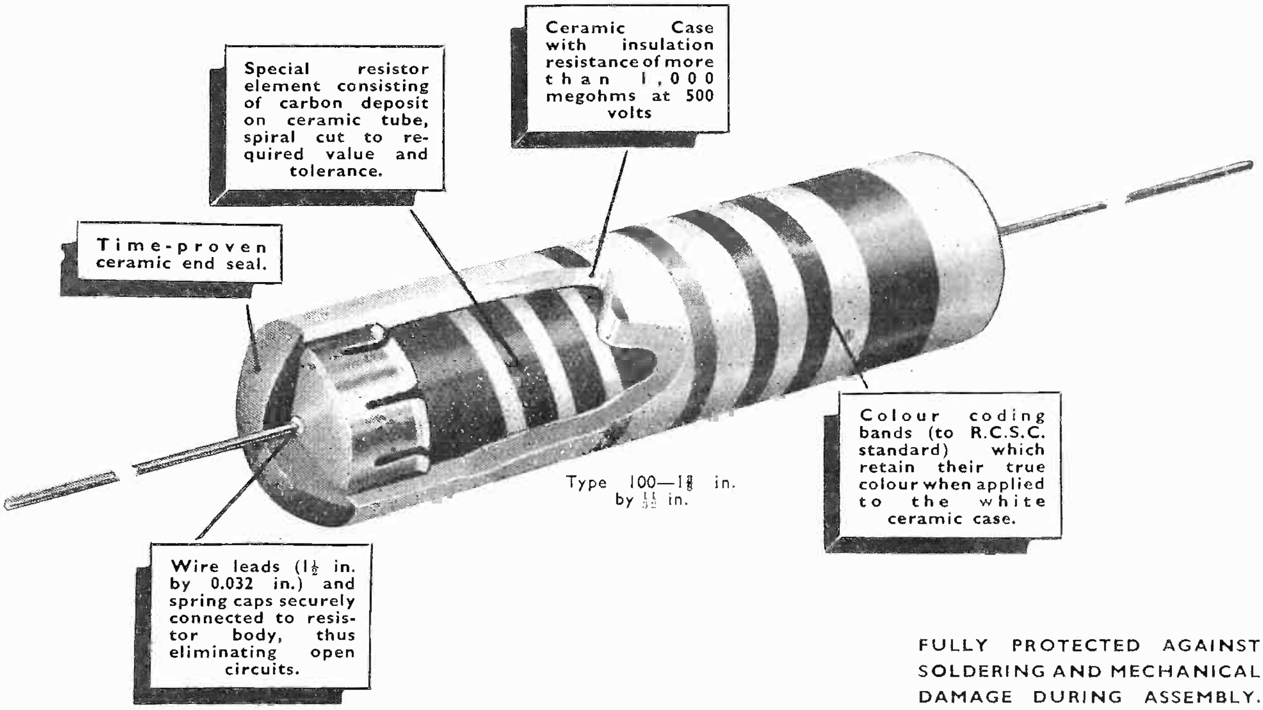

FULLY PROTECTED AGAINST SOLDERING AND MECHANICAL DAMAGE DURING ASSEMBLY.

Quality IS BUILT INTO EVERY DETAIL

Erie High Stability Resistors, besides displaying characteristics well within the limits laid down in the current R.C.S.C. specification, are fully insulated, fully tropical and extremely robust; and are, therefore, eminently suitable for operation in restricted spaces and under the severest of conditions.

Type 100, ½ watt, illustrated above, is the first to be released and will be followed in due course by Type 108, ¼ watt; and Type 109 ⅛ watt.

All standard tolerances down to ± 1 per cent. Manufacturers and Research Establishments are invited to write for full details.

ERIE *Resistor Limited*

CARLISLE ROAD · THE HYDE · LONDON N.W.9 · ENGLAND
Telephone : COLindale 8011 Cables : Resistor, London
Factories : LONDON AND GREAT YARMOUTH : TORONTO, CANADA : ERIE, PA., U.S.A.

CLASSIFIED ANNOUNCEMENTS (Cont'd.)

MISCELLANEOUS

WE WILL BUY at your price used radios, amplifiers, converters, test meters, motors, pick-ups. speakers, etc., radio and electrical accessories. Write, phone or call, University Radio Ltd., 22, Lisle Street London, W.C.2. GERrard 4447.

FOR SALE

WEBB'S 1948 Radio Map of World, new multi-colour printing with up-to-date call signs and fresh information; on heavy art paper, 4s. 6d., post 6d. On linen on rollers, 11s. 6d. post 9d.

IN STOCK. Rectifiers, Accumulator Chargers, Rotary Converters, P.A. Amplifiers, Mikes, Mains Transformers, Speakers of most types, Test Meters, etc. Special Transformers quoted for.—University Radio, Ltd., 22, Lisle Street, London, W.C.2. GERrard 4447.

TELEVISION E.H.T. TRANSFORMERS in stock: 5KV, 4V, 1.5A, rect. guaranteed. C.O.D. or C.W.O. at 3 gns. each, post 1s. 6d. R. F. Gilson Ltd., 11a, St. George's Road, Wimbledon, S.W.19.

COPPER WIRES: enamelled, tinned, Litz, cotton, silk covered. All gauges. B.A. screws, nuts, washers, soldering tags, eyelets. Ebonite and laminated Bakelite panels, tubes. Paxolin coil formers. Tufnol rod. Permanent detectors, etc. List S.A.E. Trade supplied. Post Radio Supplies, 33, Bourne Gardens, London, E.4.

COPPER WIRE, enamelled, synthetic, covered, tinned, flex, sleeving, etc. S.A.E. list. Armes, 37, Birchwood Drive, Leigh-on-Sea.

A QUANTITY of Type 100R Variacs 2 KVA. Thoroughly inspected and tested. 8 gns. each, carriage extra. Box No. 452, E.E.

FELICITY " Extended Range " 8 watt amplifiers are now available with remote tone control unit standard amplifier, price £27 10s., or with remote control unit and 42 in. lead extra 30s. Full details from F.S.R. Ltd., 87a, Upper Richmond Road, London, S.W.15.

MUST SELL, " Proceedings I.R.E. (U.S.A.) " 1947. 1948 complete, 27 issues 1944-1946. " Wireless Engineer " July 1932–October, 1939 complete. Offers, whole or part, to 44 Hollingbourne Road, Herne Hill, S.E.24.

EXPRESSLY DESIGNED by S. S. West for viewers on the fringe of the service area, and for long distance viewing, the Spencer West type AC/2 television preamplifier is earning the respect of satisfied users. It is confidently offered on approval against cash. Price 10 gns. complete. Spencer West, Quay Works, Great Yarmouth.

8-WAY HIGH VOLTAGE " Jones " type Plugs and Sockets, with crackle covers, 1s. 6d. pair complete, 12s. dozen pairs, £3 10s. per 100 pairs, carriage paid. Jack Porter Ltd., College Street, Worcester.

THE ENOCK PICK-UP is now available from stock. Moving coil (licensed under Patent No. 538.058, others pending) with precision made polished, diamond stylus. Weight at needle point, 5/8 oz. No resonances within the recorded range. Price £29 5s. inc. tax. Full particulars from Joseph Enock Ltd., 273a, High Street, Brentford, Middlesex. EALing 8103.

THE MORDAUNT DUPLEX REPRODUCER, as used in the Enock Instrument. Folded horn bass unit and high note reflector of original design, giving exceptionally smooth response from 40-20,000 c s. Even distribution over a wide angle. Reproduction has an " atmosphere " and realism hitherto unattainable. Price (ex works), 98 gns In white wood skeleton form, £88. Please send for particulars, or better still let us demonstrate. Joseph Enock Ltd., 237a, High Street, Brentford, Middlesex. EALing 8103.

I.F.T's 465 Kc./s, 7s. 6d. pair, 3 W.B. coil pack kit, 9s. 6d.; 0.1+0.1+0.1 500 V. 6d.; 100 pF+100 pF, 2d.; eyelets, tags etc., 1s. gross; 0.3 amp. 820 ohm droppers, 2s. 3d.; mains transformers, 16s. 6d.; 50 pF trimmers, 4d; knobs, 4d. B.C. adaptors, 5d. Send for cheapest list in England. Sussex Electronics Ltd. (T) Riley Road, Brighton. Telephone 4446.

" ELECTRONIC ENGINEERING ": October 1945–December 1948. 39 copies. Offers to: Box 470, E.E.

WANTED

WANTED — Telephone and Telegraph Carrier Apparatus of all types in any condition. Wilson, 93, Wardour Street, W.1.

WANTED—Teletype apparatus parts and accessories of all kinds. Terry, Strouds, Pangbourne, Berks.

WANTED.—Western Electric or Standard Telephones parts; coils. transformers, condensers any condition. Please send full details and price. Harris, 93, Wardour Street, W.1.

WANTED.- Telephone and Telegraph Components or equipment in any condition. Please give full details and prices. Harris, 93, Wardour Street, W.1.

OPERATING INSTRUCTIONS required for Radar Set 1D-17/APN-3 365 C.R.V. 338-day-44. Singleton, 104 Whirlowdale Road, Sheffield, 7.

" THE RD JUNIOR "

A new amplifier designed to meet the needs of those who require high performance at a reasonable price.

Main Features :

- 6 valves, plus rectifier.
- 8-10 watts output, two PX4s in push-pull.
- Independent bass and treble tone controls.
- High gain compensated p.u. input stage.
- Frequency range 30-15,000 c s., ± 1db.
- Provision for radio feeder unit.
- Ample negative feedback applied over three stages, including output transformer.
- High-grade components used throughout, including Partridge transformers and chokes.

Price complete - - - £19 10 0

Full details supplied on request

The new Barker 148A Loudspeaker, which we consider to be the finest baffle loaded speaker available, is now being demonstrated, and is available from stock.

ROGERS DEVELOPMENTS CO.,
106, Heath St., Hampstead, London, N.W.3
HAMpstead 6901

SULLIVAN-GRIFFITHS

DUAL DIAL NON-REACTIVE DECADE RESISTANCES

FOR ALL FREQUENCIES

NOVEL AND PATENTED

ACCURACY BETTER THAN 0.1%

Screened Resistances of guaranteed accuracy exactly similar to our well-known Decade Resistances but specially arranged so that one box of a given number of dials gives many different values of maximum resistance. Thus a three dial box (as illustrated) may be used, for instance, for

three decades of **Thousands, Hundreds** and **Tens**
or three decades of **Hundreds, Tens** and **Units**
or three decades of **Tens, Units** and **Tenths**
or three decades of **Units, Tenths** and **Hundredths**

Electrical Standards for Research and Industry

Testing and Measuring Apparatus for Communication Engineering

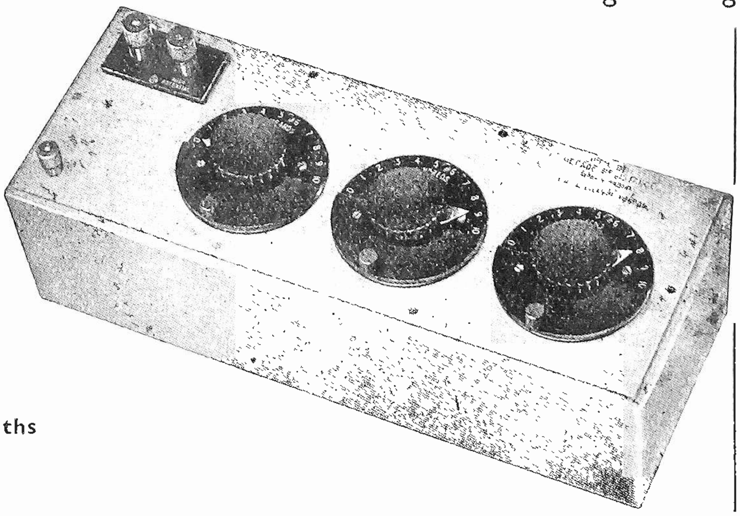

The advantages of such a system will be obvious, for in addition to the economy involved much space is saved and the residual resistance and inductance is much reduced.

The resistances are available in 3 dial, 4 dial and 5 dial types, with subdivision of 0.001% to 0.1% depending of course, on the number of dials incorporated.

H. W. SULLIVAN
— LIMITED —
LONDON, S.E.15

Telephone: New Cross 3225 (P.B.X.)

2756

Take a look inside the ERIE Insulated High Stability RESISTOR

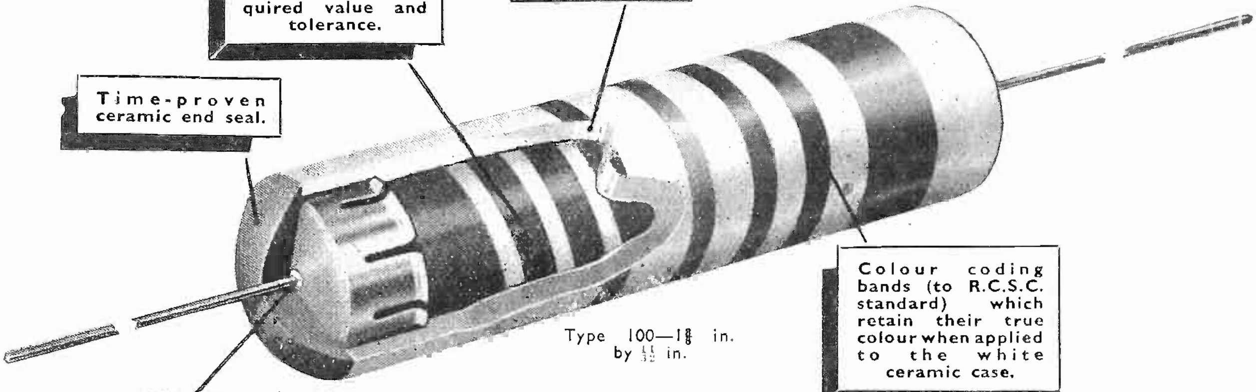

Ceramic Case with insulation resistance of more than 1,000 megohms at 500 volts

Special resistor element consisting of carbon deposit on ceramic tube, spiral cut to required value and tolerance.

Time-proven ceramic end seal.

Colour coding bands (to R.C.S.C. standard) which retain their true colour when applied to the white ceramic case.

Type 100—1⅝ in. by $\frac{11}{32}$ in.

Wire leads (1½ in. by 0.032 in.) and spring caps securely connected to resistor body, thus eliminating open circuits.

FULLY PROTECTED AGAINST SOLDERING AND MECHANICAL DAMAGE DURING ASSEMBLY.

Quality IS BUILT INTO EVERY DETAIL

Erie High Stability Resistors, besides displaying characteristics well within the limits laid down in the current R.C.S.C. specification, are fully insulated, fully tropical and extremely robust; and are, therefore, eminently suitable for operation in restricted spaces and under the severest of conditions.

Type 100, ½ watt, illustrated above, is the first to be released and will be followed in due course by Type 108, ¼ watt; and Type 109 ⅛ watt.

All standard tolerances down to ± 1 per cent. Manufacturers and Research Establishments are invited to write for full details.

ERIE *Resistor Limited*

CARLISLE ROAD · THE HYDE · LONDON N.W.9 · ENGLAND
Telephone: COLindale 8011
Cables: Resistor, London
Factories: LONDON AND GREAT YARMOUTH : TORONTO, CANADA : ERIE, PA., U.S.A.

VALVES for SPECIAL PURPOSES

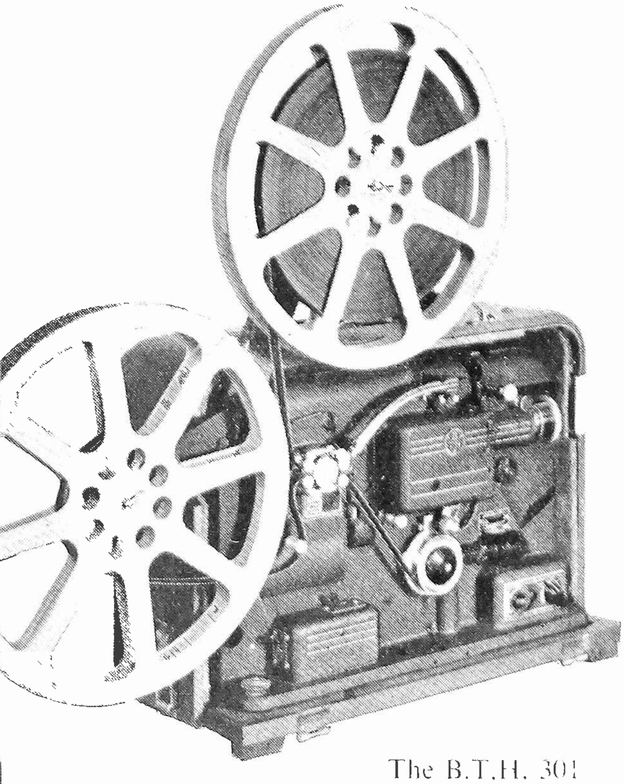

The B.T.H. 301 Projector

P.E.50

The Mazda P.E.50 is a gas filled miniature photo-electric cell with many useful applications. One example of its use is its employment, for sound reproduction, in the B.T.H. 301 Projector.

Electrical Characteristics

Average Gas Amplification Factor ...	5.0
Average Static Luminous Sensitivity (μA/lumen)	100.0
Inter-electrode capacity (μμF) ...	3.0
Maximum Anode Voltage (volt D.C. or peak A.C.)	90.0
Maximum Anode current (μA) ...	8.0
Projected Cathode Area (sq. in.) ...	0.38

Base: Miniature 4-pin (DA 4)

Notes

(i) Gas amplification factor and luminous sensitivity measured at a lamp colour temperature of 2700°K with a series resistance of 1 megohm for PE.50. 0.5 megohm for PE.51 and PE 52

(ii) Gas amplification factor is ratio of anode current at 90 volts to current at 25 volts.

(iii) Static luminous sensitivity is the ratio of the steady value of anode current to the steady value of incident flux in lumens.

(iv) The primary sensitivity is measured at an anode voltage of 25, below which ionisation has not taken place in the gas filled cell.

(v) Overall sensitivity is measured at an anode voltage of 90 and is many times greater than the primary sensitivity due to ionisation of the gas filling.

Further details on this and other Ediswan Mazda photocells may be obtained on request

EDISWAN

MAZDA

RADIO VALVES AND CATHODE RAY TUBES

THE EDISON SWAN ELECTRIC CO. LTD., 155 CHARING CROSS ROAD, LONDON, W.C.2

RA.95

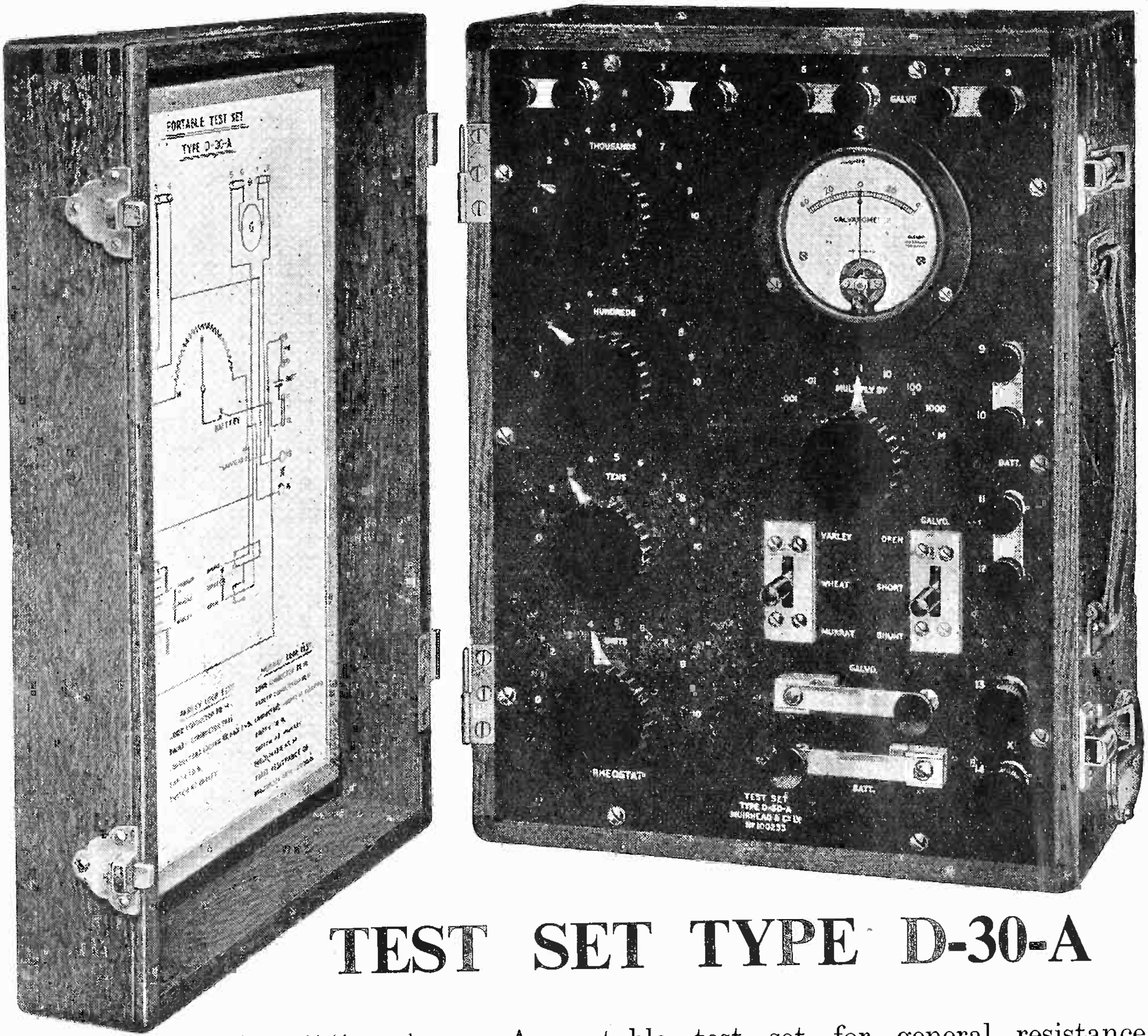

TEST SET TYPE D-30-A

RANGE - - ·001 ohm to 11·11 megohms
DIMENSIONS - - - 12½" x 9½" x 6"
WEIGHT - - - - - - 12 lbs.

A descriptive bulletin will be supplied on request.

A portable test set for general resistance measurements and for fault location on lines and cables—May be used for A.C. tests with suitable power source and detector—Resistance decades and galvanometer can be used externally.

MUIRHEAD

MUIRHEAD AND COMPANY LIMITED, ELMERS END, BECKENHAM, KENT. TELEPHONE : BECKENHAM 0041-0042

FOR OVER 60 YEARS DESIGNERS AND MAKERS OF PRECISION INSTRUMENTS

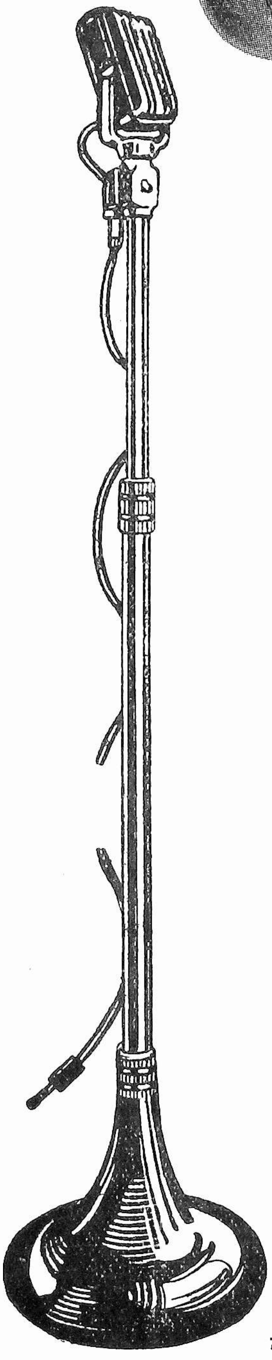

"SUPER FIFTY WATT" AMPLIFIER

This AMPLIFIER has a response of 30 c/s. to 25,000 c/s within ¼db, under 2 per cent distortion at 40 watts and 1 per cent at 15 watts, including noise and distortion of pre-amplifier and microphone transformer. Electronic mixing for microphone and gramophone of either high or low impedance with top and bass controls. Output for 15/250 ohms with generous voice coil feedback to minimise speaker distortion. New style easy access steel case gives recessed controls, making transport safe and easy. Exceedingly well ventilated for long life. Amplifier complete in steel case, with built-in 15 ohm mu-metal shielded microphone transformer, tropical finish. *As illustrated*, Price **36½ Gns.**

All types of
MICROPHONES, STANDS and SPEAKERS
available from stock including
12 in. GOODMAN P.M. SPEAKER

●

30-Watt RECORD REPRODUCER
in metal case
PRICE 30½ Gns.

●

10-Watt RECORD REPRODUCER with **MICROPHONE STAGE**, in case
PRICE 25½ Gns.

●

CP20A AMPLIFIER
for A.C. Mains and 12-volt Battery
PRICE £28 . 0 . 0

FOUR-WAY ELECTRONIC MIXER

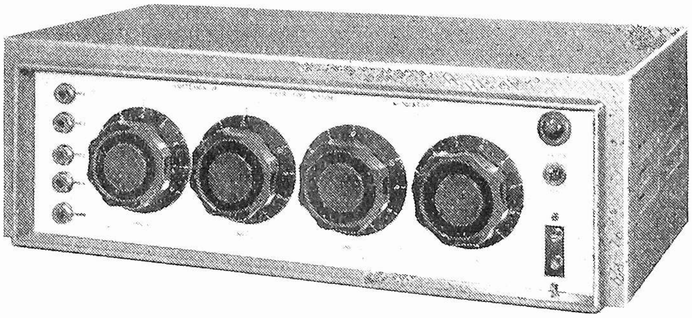

This unit with 4 built-in, balanced and screened microphone transformers, normally of 15-30 ohms impedance. Has 5 valves and selenium rectifier supplied by its own built-in screened power pack; consumption, 20 watts.

Suitable for recording and dubbing, or large P.A. Installations since it will drive up to six of our 50-watt amplifiers, whose base dimensions it matches. The standard model has an output impedance of 20,000 ohms or less, and any impedance can be supplied to order. *Price in case with valves, etc.* **£24.**

**OUR FRIENDS OVERSEAS
are invited to write for Export Terms**

Vortexion LIMITED

**257-261 THE BROADWAY, WIMBLEDON,
LONDON, S.W.19, ENGLAND.**

TELEPHONES : LIBerty 2814 and 6242-3.
TELEGRAMS : "VORTEXION, WIMBLE, LONDON."

Cold Cathode Triodes

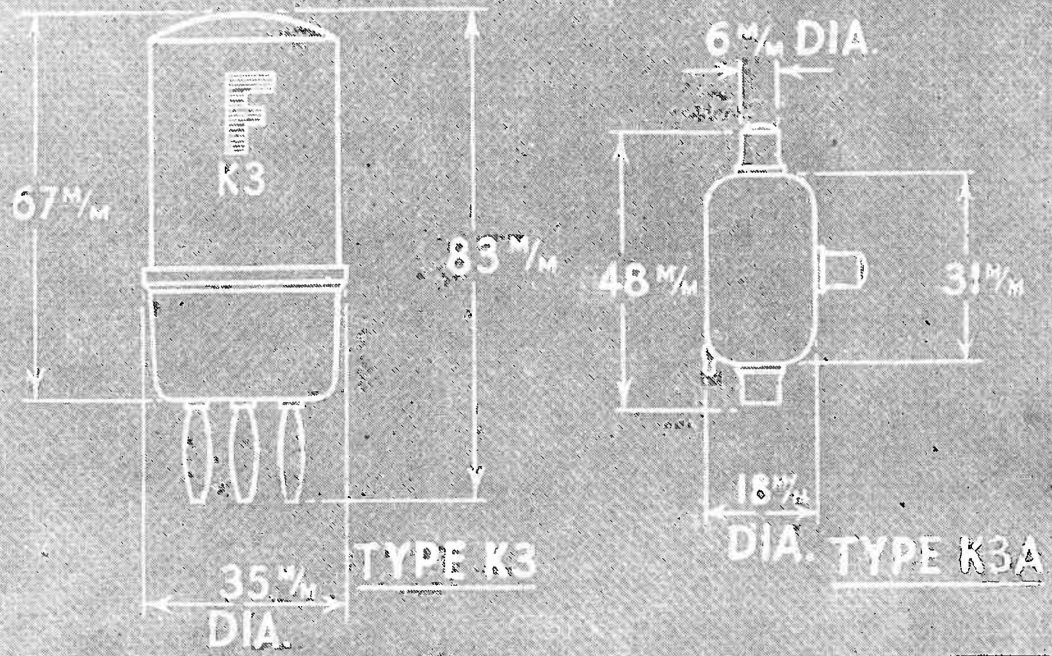

IMMEDIATE DELIVERY

FERRANTI

Suitable for operation as relay tubes where the mean current does not exceed 5 milliamperes.

Operating Characteristics.	K3	K3A
Anode voltage	135	135
Trigger Breakdown voltage	79-84v.	85-95v.
Anode current (continuous)	5mA max.	5mA max.
Anode current (intermittent)	20mA peak 5mA mean	20mA peak 5mA mean
Trigger current	4/μA max.	4/μA max.
Recommended static bias	75 v.	75 v.
Gas filling	Neon	Argon

The K3 is supplied housed in a metal container, on an English 4 pin base. The K3A is supplied unmounted but with standard type valve caps for connecting purposes.

FERRANTI LTD

ELECTRONICS DEPT. MOSTON MANCHESTER 10

Visit Stand No. 32 at the R.C.M.F. Exhibition

and see

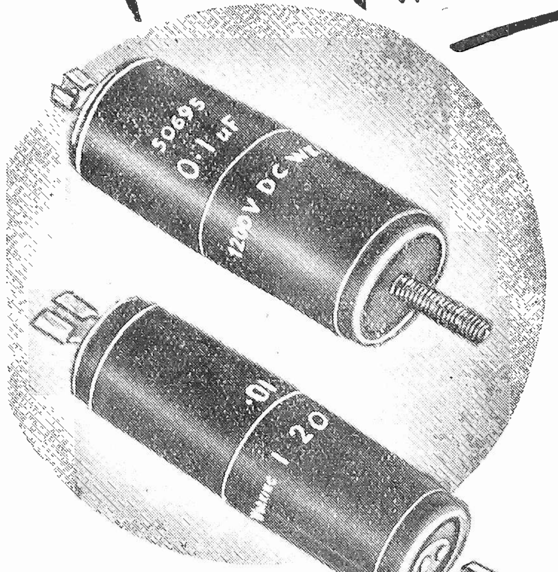

BICC
Capacitors
and
Television
Down Leads

Other BICC exhibits include . . .

Radio Frequency Cables
P.V.C. Connecting Wires
Anti-Interference Aerial
P.V.C. Sleeving
Silicone Rubber Connecting Wires & Flexibles

B.I. Callender's EQUIPMENT for the RADIO INDUSTRY

BRITISH INSULATED CALLENDER'S CABLES LIMITED
NORFOLK HOUSE, NORFOLK STREET, LONDON, W.C.2

AVO REGD TRADE MARK

Precision
ELECTRICAL TESTING INSTRUMENTS

The H.R. AVOMETER

This recently developed High Resistance AvoMeter has a sensitivity of 20,000 ohms per volt on the D.C. voltage ranges and 1,000 ohms per volt on the A.C. ranges.

It is a compact and portable multi-range instrument having many advantages which will commend it for use in laboratory or workshop. A **5-inch clearly marked scale** with an anti-parallax mirror is used for the following ranges of readings :—

D.C. CURRENT	50 μA to 1,000 mA.
D.C. VOLTAGE	2.5 V. to 2,500 V.
A.C. VOLTAGE	10 V. to 2,500 V.
RESISTANCE	0.1 ohm to 5 megohms (with internal battery).

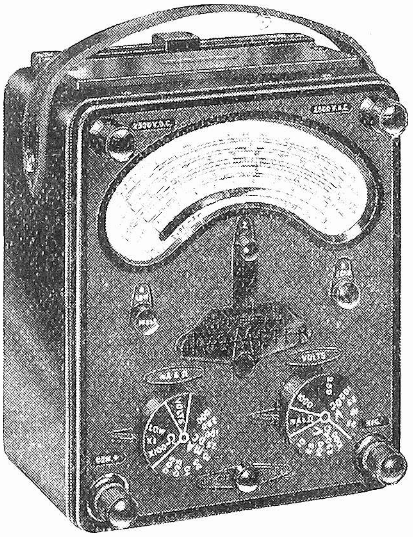

PRICE
£19 : 10s.

Size: 8⅜″ × 7″ × 4½″ Weight: 7½ lbs.

The instrument can be supplied, if required, fitted with magnetic screening for protection against stray magnetic fields. It will stand up to heavy overload and is **protected by an automatic cut-out.** In addition to its multi-range facilities, it can be used as a Galvanometer, for which purpose the zero can be offset to the extent of 30% of full scale deflection by a simple knob adjustment.

Sole Proprietors and Manufacturers

The AUTOMATIC COIL WINDER & ELECTRICAL EQUIPMENT CO., LTD.
WINDER HOUSE • DOUGLAS STREET • LONDON • S.W.1 *Telephone: VICTORIA 3404/9*

H.R.1.

Construction Materials

for THERMIONIC VALVES

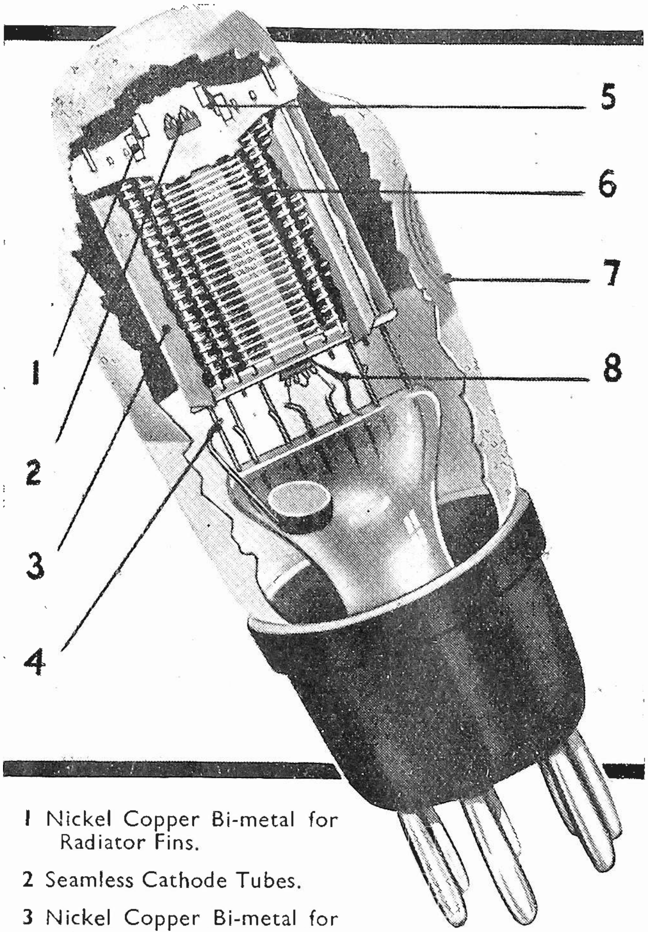

1 Nickel Copper Bi-metal for Radiator Fins.
2 Seamless Cathode Tubes.
3 Nickel Copper Bi-metal for Electrodes.
4 Mallory miniature spot welding Electrodes and Holders for assembly.
5 Mallory 3M Grid Support Wire.
6 Nickel Clad Copper Grid Support Wire.
7 Vitreous Enamel Transfers.
8 Nickel Connecting Tapes and Filament Tapes for Directly Heated Valves.

Specialised products of

Johnson Matthey & CO., LIMITED

HATTON GARDEN · LONDON · E.C.1
GD109

ULTRASONICS

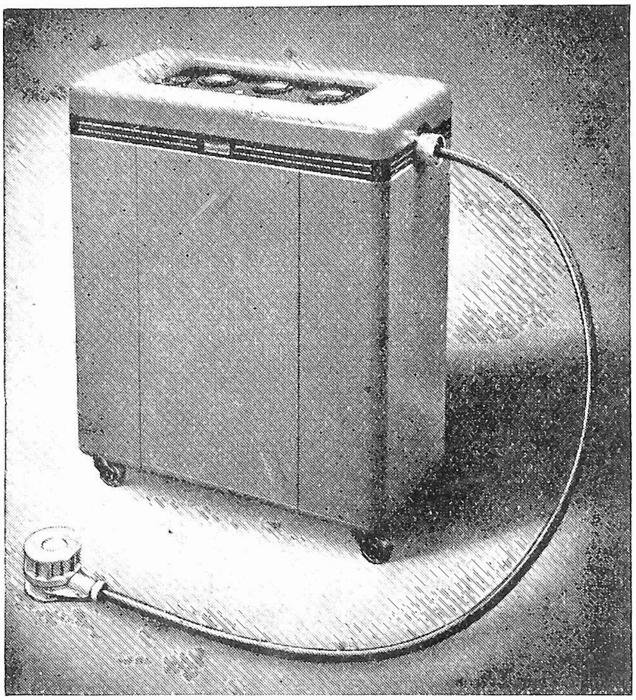

Mullard Ultrasonic Generator Type E.7562

Here is another example of how Mullard Research is helping forward Industry. The Mullard Laboratory Ultrasonic Generator is the first commercial generator to be produced in this country. It has been designed to fulfil the need for an experimental unit of wide flexibility.

These features are unique :

- **Power output into a water load of 500 watts at 2 Mc/s.**
- **Transducer head designed for operation in conductive or non-conductive liquids.**
- **Wide range of generator frequencies.**
- **Styled to match modern laboratory surroundings.**

Mullard

Electronic Products Ltd.

Electronic Equipment Division

ABOYNE WORKS, ABOYNE ROAD, LONDON, S.W.17

(MI.283)

B
T-H

VALVES FOR RESEARCH
AND
ELECTRONIC CONTROL

Photo-cells, Ignitrons,
Thyratrons, Rectifiers,
Safety Gaps

• •

VALVES FOR THE
CENTIMETRE WAVE BAND

Magnetrons, Klystrons,
Crystal Rectifiers

• •

Please send details
of your requirements to:—

BRITISH THOMSON-HOUSTON

THE BRITISH THOMSON-HOUSTON COMPANY LIMITED · RUGBY · ENGLAND

A 3637 N.

Which Material for which application?

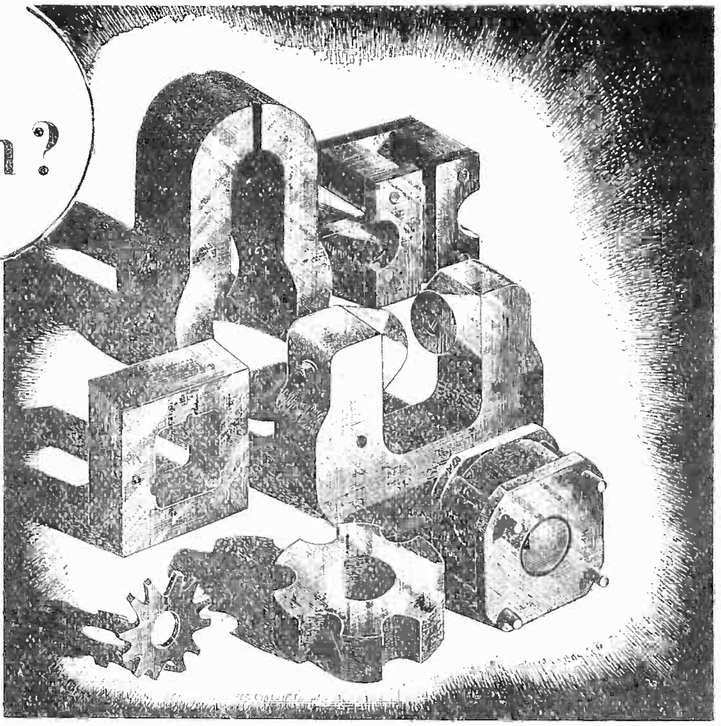

To the user of permanent magnets in the widest possible variety of applications we can offer assistance in selecting the right magnet and type of magnetic material. Our contribution to the development of permanent magnets is most extensive and we conduct continuous research into their improvement.

TOLEDO THE DARWINS GROUP

DARWINS LIMITED · TINSLEY · SHEFFIELD

THE DARWINS GROUP · CRAFTSMEN IN FINE STEELS

With **Dawe Stroboscopes** you can measure the speed of a machine to an accuracy of 1 per cent—then you can make the machine go through its paces and actually see, in slow motion, the results of mal-adjustments, worn parts, slip, or other mechanical defects. Can also be used to obtain high-speed photographs. Every research engineer, designer and maintenance engineer will find a valuable use for this instrument. Write for further information.

DAWE INSTRUMENTS LTD

130 UXBRIDGE ROAD, HANWELL,
LONDON, W.7. EALing 6215

Visit us at Physical Society Exhibition, Stand 129

MINIRACK COMPLETE CATHODE-RAY OSCILLOGRAPH EQUIPMENTS

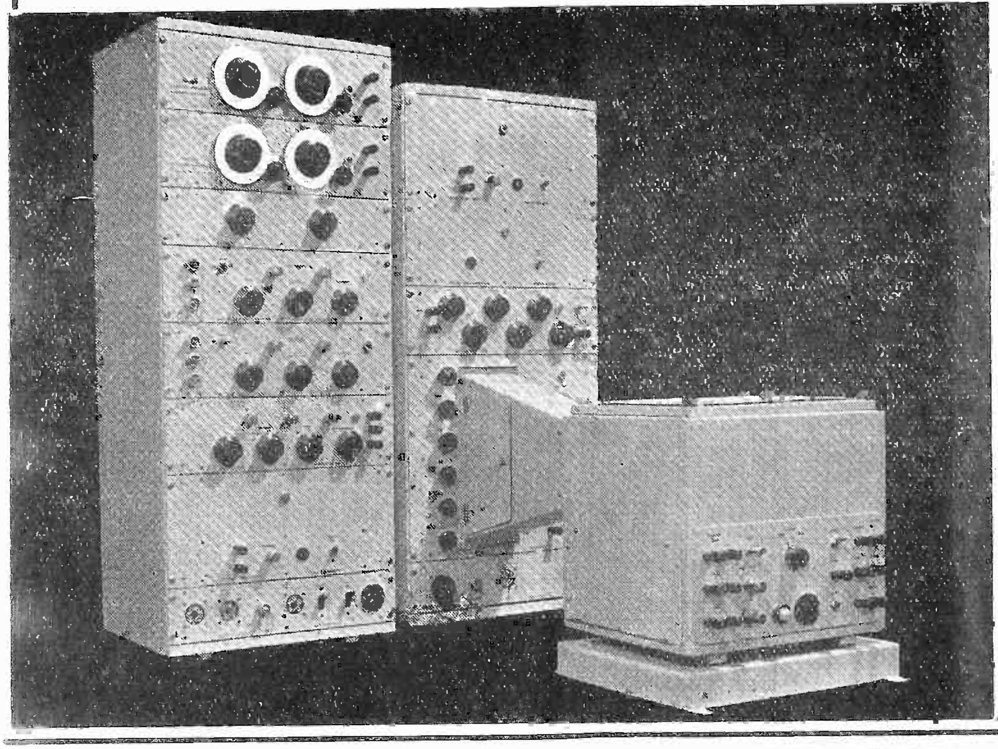

- Single and Multi-channel
- F.M. Amplifiers
- A.C. and D.C. Amplifiers
- Time-Bases
- Time-Markers
- Recording Cameras
- Pressure and Vibration pick-ups

We make a wide range of standard equipments to suit all purposes.

PLEASE WRITE FOR DETAILS

Special equipments made to meet users' requirements

SOUTHERN INSTRUMENTS
LIMITED
FERNHILL, HAWLEY
CAMBERLEY, SURREY
Phone: Camberley 1741

AN ANNOUNCEMENT OF EXCEPTIONAL INTEREST ....

The **FOX HELICAL POTENTIOMETER** type PXF 5/H 10 is now available for general release to the Electronic Industry,

BRIEF SPECIFICATION

Resistance range, 20 ohms to 50 K. ohms.
Helical turns 10.
Rotation, 3,600°.
Number of wire turns, 2,000 to 12,000.
Wattage, 5.

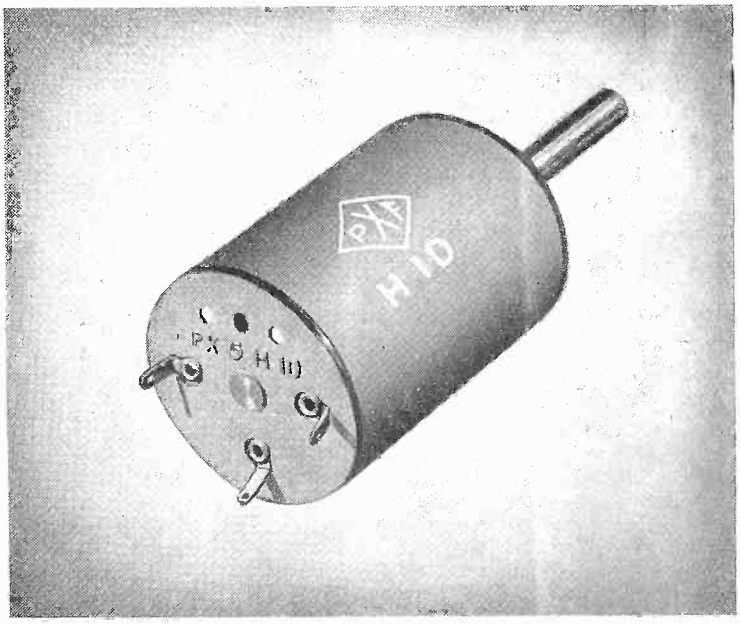

Write for full details to :—

P. X. FOX LIMITED
TOROIDAL POTENTIOMETER SPECIALISTS
HORSFORTH, YORKSHIRE, ENGLAND.
Telephone : Horsforth 2831/2. - *Telegrams :* "Toroidal, Leeds."

n.d.h.

ARMSTRONG

Makers of fine Radio Chassis for 16 years

Model R.F.103 (type 2), 10 VALVE ALL-WAVE Radio Chassis, incorporating R.F. pre-amplifier, waveband expansion, 2 stages of I.F. amplification with variable selectivity, cathode ray tuning indicator and 10 watts push-pull output.

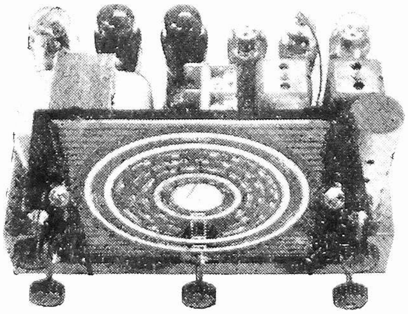

CIRCUIT

The new R.F.103 chassis largely removes the difficulty of separating stations after dark as the two stages of I.F. amplification with variable selectivity permit of a maximum selectivity better than 6 Kc/s. On the short wavebands the actual sensitivity is 8 micro volts. It will be appreciated that this chassis has a performance of an extremely high order, and coupled with the 10 watt output makes one of the most desirable musical instruments offered to the public. For 200-250 V. A.C. mains.

Price **19 Gns.,** *plus tax.*

Model Exp 125, 14 VALVE ALL-WAVE Radio Chassis incorporates every worthwhile refinement, including continuous waveband coverage from 11.9 to 550 metres, plus the long wave on the Home model; waveband expansion (the effective scale length is 5 feet); efficient R.F. pre-amplifier stage ; two stages of I.F. amplification, variable selectivity in both stages; three stages of delayed A.G.C. ; four switched positions of bass lift and four of treble lift; four beam tetrodes in parallel-push-pull incorporating negative feed-back used in the output stage to give 15 watts high quality output.

CIRCUIT

Aerial coupled to R.F. pentode acting as pre-amplifier feeding a triode hexode frequency changer; iron-cored I.F. transformer (465 Kc/s.) coupled to R.F. pentode again coupled by iron-cored I.F. transformer to variable-mu pentode (these transformers employ three switched positions of variable selectivity). The resulting signal is supplied to one diode of a double diode triode, the second diode acting as A.G.C. rectifier and the triode as the first L.F. amplifier. Between this DDT and the following triode valve is the tone compensating circuit. The output from the second L.F. triode is fed into a further triode acting as a phase changer, which is coupled to four tetrodes in parallel-push-pull to give 15 watts audio. A cathode ray tuning indicator is fitted.

Price **32 Gns.,** *plus tax*

Kindly write for illustrated Catalogue **Demonstrations at our Showrooms**

ARMSTRONG WIRELESS & TELEVISION CO. LTD. WARLTERS ROAD,
HOLLOWAY, LONDON, N.7

'Phone : NORth 3213

AN AUDIO-FREQUENCY D.C. OSCILLOSCOPE

DESIGNED FOR APPLICATIONS where the full facilities of the well-known 1684D are not required, this new model 1684N retains the basic advantages of the Symmetrical direct-coupled circuiting.

A high-sensitivity vertical amplifier is incorporated, giving a deflection sensitivity of 1mV/cm from zero to 50 Kc/s.

The horizontal axis has only a simple amplifier intended primarily to provide sweep expansion for the time base, which runs from 5 to 10,000 c/s.

£75
AVAILABLE
FOR EARLY
DELIVERY

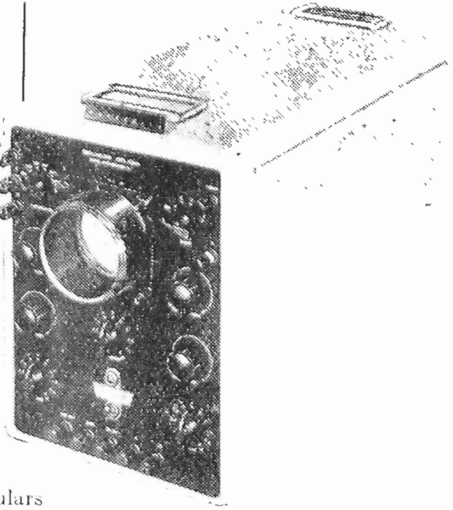

For further particulars please write for our new brochure of Electronic Instruments.

Furzehill

LABORATORIES LTD.

BOREHAM WOOD · HERTFORDSHIRE

TELEPHONE — ELStree 1137

THE "BELLING-LEE" PAGE

Providing technical information, service and advice in relation to our products and the suppression of electrical interference

A NEW INDOOR TELEVISION AERIAL

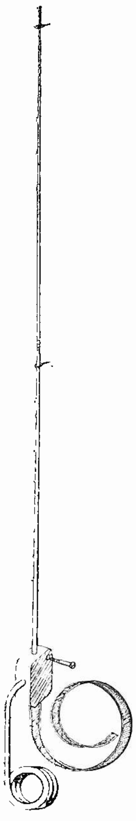

The "Doorod"[*1] is a fully dimensioned half-wave dipole with one rigid and one flexible element for use within six or seven miles of Alexandra Palace and where interference is not severe. It is so named as it is thought that the most likely place for its fixing will be by the side of the door frame.

The "Doorod" must not be confused with miniature or compressed dipoles. All indoor aerials have their limitations and the best position must be found by trial and error. They should not be placed too near the receiver. The great thing to avoid is the effect of people walking about near the aerial. Don't forget that in a semi-detached house or in flats, there may be fluctuations in picture strength caused by the movements of neighbours on the other side of the party wall. Any indoor dipole will also be affected by the presence of standard lamps or metal pipes, girders, etc., even though they are behind plaster, bricks and mortar.

If an outside dipole is impossible, an inverted "V" in the loft will always give better results than any television aerial in the same room as the set.

VIBRATING AERIALS

This winter has produced its usual crop of complaints of television dipoles vibrating in the wind. "Belling-Lee" steel elements were apparently immune. There may be effects at very high wind speeds, but, under such conditions, there is so much other noise that the vibrations are not unduly troublesome.

With light high tensile alloy elements, this vibration is set up at lower wind velocities and can be very troublesome, particularly where the wind is undisturbed by hills or buildings. It would take up too much space to say how the noise is set up, but much work has gone into the cure. It has been found that the cure is to fill each element with fine sawdust (dipole and reflector). Dismantling of the elements is unnecessary. Firstly, ram home a rag plug into the opposite ends to those connected to the cross arm, then the sawdust, finally replace the rubber plug. Other methods may be found, but we know that this works.

It was very gratifying to hear from a dealer near Worthing that on the coast all makes of aerials were apt to vibrate, but that "Belling-Lee" "Viewrods"[*2] were the only ones that really stood up to heavy weather conditions in exposed locations.

CAR INTERFERENCE WITH TELEVISION

Most of the cars on the road just now can be dealt with by unscrewing the central lead from the distributor, and in its place screwing a two shilling resistor,[*3] into which the original lead will go. This is all that need be done unless you have a car radio, in which case the car is probably already suppressed.

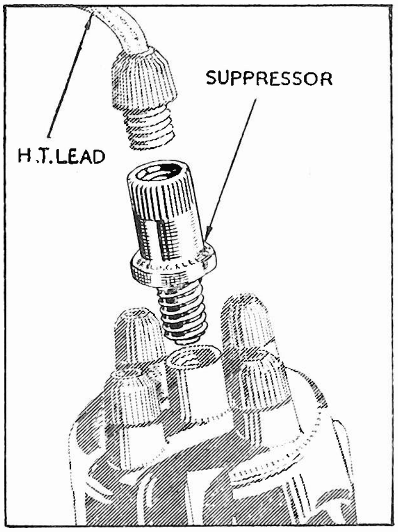

The sketch shows the simple method of fixing the "Belling-Lee" distributor lead suppressor L630 which sell at 2/- each

[*1] "DOOROD" (registration applied for) indoor television aerial, L645, 30/- each. Supplied in packs of six.

[*2] "VIEWROD" (regd. trade mark) television aerials. L501/T, Dipole and wall fixing bracket, 52/6. L502/L, Dipole, reflector and lashings, etc., 126/-.

U.K. Patent Nos. 519883, 526587, 520,628. Registered Design Nos. 836591, 836593.

[*3] Distributor lead suppressor, screw in type, L630, 2/- each.

Regd. Design No. 853645.

BELLING & LEE LTD
CAMBRIDGE ARTERIAL ROAD, ENFIELD, MIDDX
ENGLAND

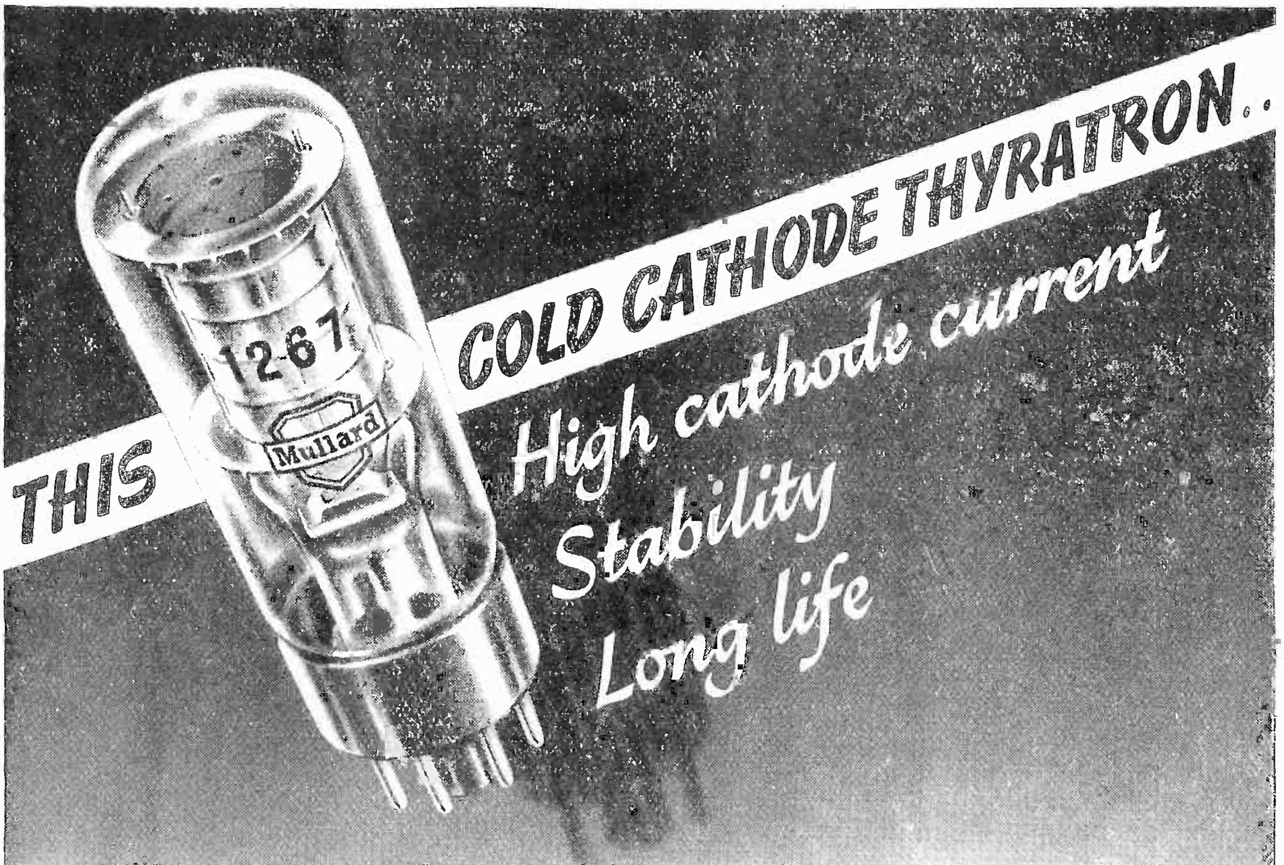

This new Mullard 1267 will be welcomed by all users of cold cathode thyratrons. A replacement for, and an improvement upon the OA4G, it has the following outstanding advantages :—

(*1*) *High continuous and instantaneous cathode current.*

(*2*) *Consistent striking characteristics.*

(*3*) *Higher stability and freedom from photoelectric and temperature effects.*

(*4*) *Reliability and long life resulting from improved cathode activation.*

These features make the 1267 ideal for a great number of industrial electronic applications, the more important of which include :—

- *Welding and industrial engineering timers.*
- *Sequential process timers.*
- *Alarm, fault and protective systems.*
- *Remote-controlled power switching.*

PRINCIPAL CHARACTERISTICS

**Max. Operating Anode Voltage ... ...*	*225V peak*
Trigger Voltage for firing (Pos.)	*70V. min. to 90V. max.*
Trigger Current at Striking Point ($V_a = 140$)	*100μA max.*
Valve Voltage Drop	*70V. approx.*
Max. Continuous Cathode Current ...	*25mA*
Max. Peak Cathode Current	*100mA*

**Above this voltage the valve may break down at Vg = O.*

Mullard

thermionic valves & electron tubes

Industrial Power Valves · Thyratrons · Industrial Rectifiers · Photocells · Flash Tubes · Accelerometers
Cathode Ray Tubes · Stabilisers and Reference Level Tubes · Cold Cathode Tubes · Electrometers, etc.

MULLARD ELECTRONIC PRODUCTS LTD., CENTURY HOUSE, SHAFTESBURY AVENUE, W.C.2
MVT45

Electronic Engineering

EDITORIAL, ADVERTISING AND PUBLISHING OFFICES, 28, ESSEX STREET, STRAND, W.C.2.
TELEPHONE: CENTRAL 6565 (10 LINES) *EDITOR:* H. G. FOSTER, M.Sc., A.M.I.E.E. *TELEGRAMS:* LECTRONING, ESTRAND, LONDON
Monthly (published last Friday of preceding month) 2/- net. Subscription Rate: Post Paid 12 months 26/-.

Vol. 21. No. 253 March, 1949

CONTENTS

Retrospect

VERY few of us to-day can have personal recollections of the Britain of 50 years ago, and in comparison with to-day, life was smooth and unhurried.

Yet from many aspects the year 899 must have seemed the end of one era and the beginning of a new nd uncertain one. Names like Roberts, Buller and Kitchener were becoming known and, in scientific ircles, Röntgen had just announced his discovery of a new type of radiaion which we now know as X-rays. Professor J. J. Thompson had been ecturing to the Royal Institution n cathode rays and the electron, but Marconi had yet to span the Atlantic, and Fleming to make a alve.

Future historians writing on the rowth of the electronic age might ell ponder on the date of January 5, 1899, for it was on this day that group of business men sat around table in a solicitor's office in helmsford, England, and put their gnatures to an agreement securing remises with a floor space of about 0,000 sq. ft. in Hall Street, Chelmsord, for a yearly rental of £200.

In these premises were to be oused the world's first radio factory r the manufacture and assembly wireless transmitting and receivg equipment by the Wireless Telegraph and Signal Co., Ltd., which later became Marconi's Wireless Telegraph Co., Ltd. In this two-storyed warehouse, together with a house known as "The Manager's House," were made the 10-in. induction coils and the delicate coherer receivers which comprised the majority of equipment in use at that time.

On the ground floor of the main building were the machine tools, while upstairs women were coil-winding and lacquering. From the main building the completed equipments were taken to the ground floor of the manager's house for testing prior to despatch, and upstairs coherers were being tested in bedrooms lined with wire netting.

And what a long way we have come during the last 50 years! From these humble beginnings has grown the vast industry as we know it to-day.

But to-day the world's first radio factory has reverted to its original state; the manager's house has once more become a dwelling house and we are left wondering what will be their ultimate end.

Is it too late for the radio industry or some other interested body to acquire these historic premises and possibly to convert the world's first radio factory into the world's first radio museum?

It is admitted that much radio apparatus of historic value is already preserved, but with the present overcrowded state of many of our museums it cannot be displayed to advantage, and there is the danger that some pieces may simply be discarded as junk.

Under one roof it would be possible to trace the fascinating progress from the early experimental apparatus of Marconi and Lodge to, say, Magnetron Number One—the development of which was probably the greatest single war winning contribution.

Readers of *Electronic Engineering* will notice the increase of thirty-six to forty pages with the appearance of this issue.

This addition of four pages is most welcome from every point of view. It will enable us to widen the scope of our activities and interests to the benefit of the reader and it will ease the situation caused by our having to cut MSS merely on the grounds of lack of space. Authors may now submit contributions with the assurance of earlier publication than heretofore. The price of Electronic Engineering will of course remain unchanged.

B.B.C. MOBILE TELEVISION CONTROL ROOM

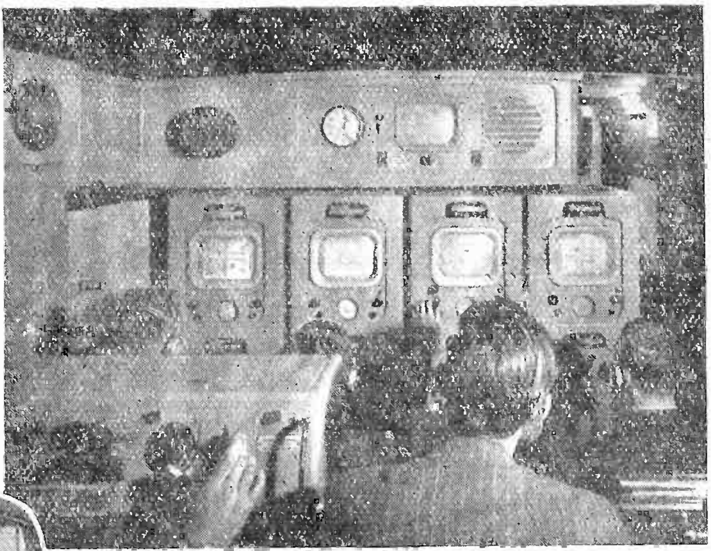

The photograph above shows the new mobile control room, manufactured by Pye Ltd., to the B.B.C.'s specification for television outside broadcasts. On arrival at the O.B. Point, the motor is usually detached from the trailer

Top Right : Of the four operators sitting in front of the monitors, three look after one camera channel each, and the fourth (third from left) is the vision mixer, who makes the change-overs from one camera to another. In the right foreground is the producer, and on the left the sound mixer.

The photo above shows one of the "PHOTICON" cameras which are used on television outside broadcasts with the mobile television control room. Four lenses, of different focal lengths, are mounted in the turret assembly at the front of the camera, and the required lenses may be quickly selected by rotating the handle next to the viewfinder.

These cameras have an electronic viewfinder which shows the picture as televised by the camera.

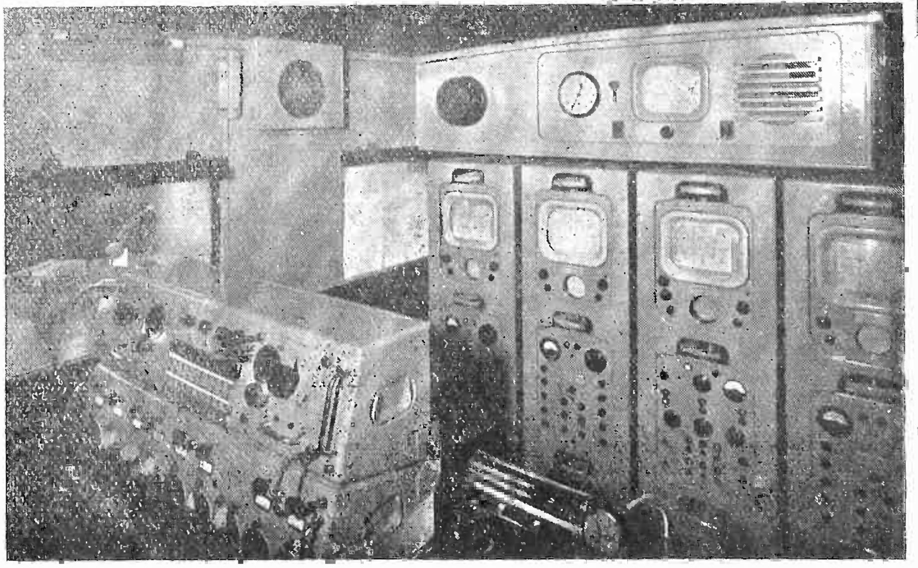

Left : Up to three television cameras can be used simultaneously, and the picture from each displayed on a separate monitor tube. Another tube (third from the left) monitors the picture being sent out from the control room. The television screen next to the clock shows the picture transmitted from Alexandra Palace. The panel in the left foreground is the sound mixer, where the microphone outputs are blended and their volume controlled

[Photos by courtesy of the B.B.C.

Cathode-Ray Tubes with Post-Deflection Acceleration

By W. G. WHITE, M.Sc.(Eng.), A.M.I.E.E.*

IN some case equipments have been built in which the frequency response characteristics of the electrical circuits are greater than the abilities of ordinary cathode-ray tubes to record. Even with the maximum voltage and beam current permissible for tubes of a given design the traces have remained invisible.

In other cases it is desired to project, by optical means, an enlarged image of a recurrent trace, or a transient, which can be easily seen by direct viewing. The light output of ordinary cathode-ray tubes is insufficient to give a satisfactory enlargement of the picture.

It sometimes happens that a presentation of a signal trace with a particular design of tube is of very low brightness due possibly to modifications in the original design having been made in order to enlarge some factor, such as range. By changing the tube type and operating voltages a satisfactory picture could easily be obtained, but such a radical change, involving the scrapping of a complete equipment and the development of a new one, would take a considerable time and would involve great expense. In some circumstances, especially in war time, such a re-design may be out of the question.

Electronic apparatus has frequently to be fitted into a very limited space. This has led to the miniaturisation of many equipments. It may not be possible to design a miniature C.R.T indicator unit without some sacrifice of performance.

In the two examples first mentioned there is the possibility of designing a tube to work at a higher voltage. This solution has one drawback, namely, an increase in deflecting forces is necessary.

In all these cases there is the superficially attractive scheme of using a tube fitted with a post-deflection accelerator, which, ideally, would give an augmented brightness depending on the additional voltage, with no change in the deflecting forces or in the "line width" of the signal trace.

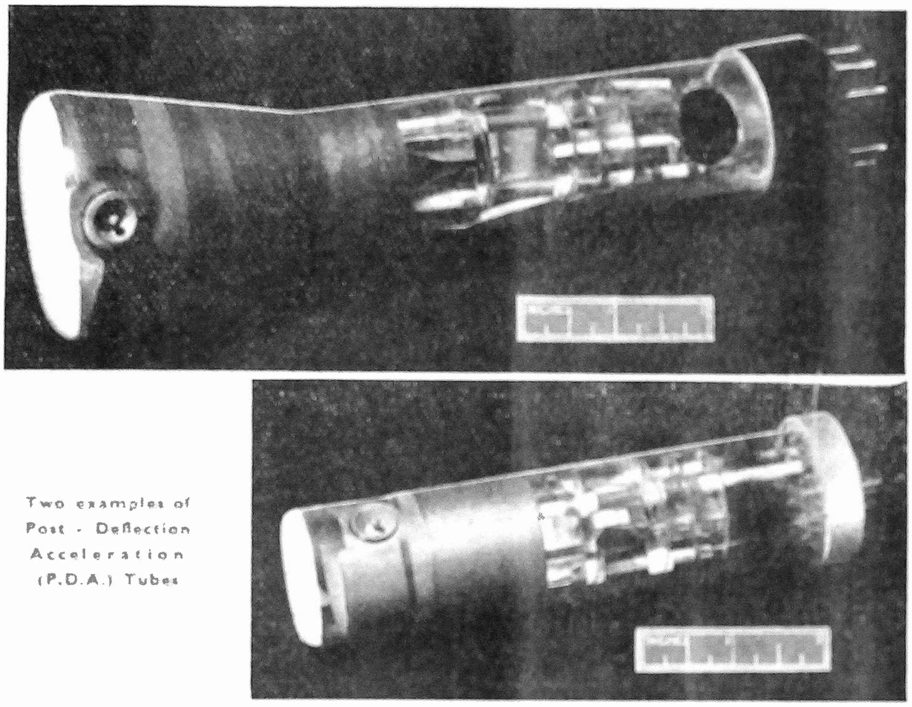

Two examples of Post-Deflection Acceleration (P.D.A.) Tubes

Ideal Post-deflection Acceleration Cathode Ray Tubes

An ideal P.D.A. tube may be imagined to consist of an ordinary tube to which is added an infinitely thin electrode at the back of the fluorescent screen maintained at a voltage, higher than that of the accelerating anode (Fig. 1).

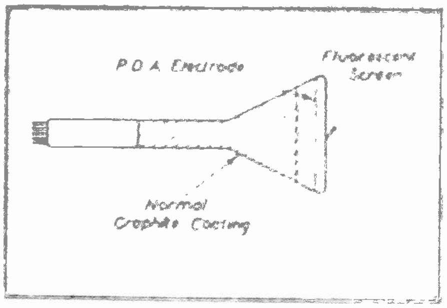

Fig. 1. Ideal form of P.D.A. Tube

Such an electrode would not impede the flow of electrons through it or disturb the distribution of electric and magnetic fields over the path of the beam, but would give the electrons a final boost in velocity, resulting in an increased brightness. Measuring all voltages from the cathode, if the P.D.A. voltage were twice the accelerator voltage the brightness would be increased in the ratio of 4 : 1 since, to a first approximation, the brightness is proportional to the square of the overall voltage. This wonderful improvement would be obtained in tubes of both electrostatic and magnetic type. It remains to be seen how closely practical designs of P.D.A. tubes approach the ideal.

Construction of Practical P.D.A. Tubes

A cathode ray tube having one post-deflection accelerator is shown in Fig. 2. The P.D.A. takes the form of a band of graphite on the inner circumference of the glass envelope and is situated near the fluorescent screen. The electrode is separated from the usual graphite coating which is "common" with the accelerating anode, by a clear band of glass. It has been found to be an advantage to coat the intermediate band between the two graphite electrodes with a high resistance material such as jeweller's rouge. This has the effect of tapering off the potential gradients which would otherwise exist between the edges of the adjacent bands of graphite. A tube of this type is suitable for operation with a P.D.A. voltage about twice that of the

---

* Ministry of Supply, R.A.E. Farnborough

B.B.C. MOBILE TELEVISION CONTROL ROOM

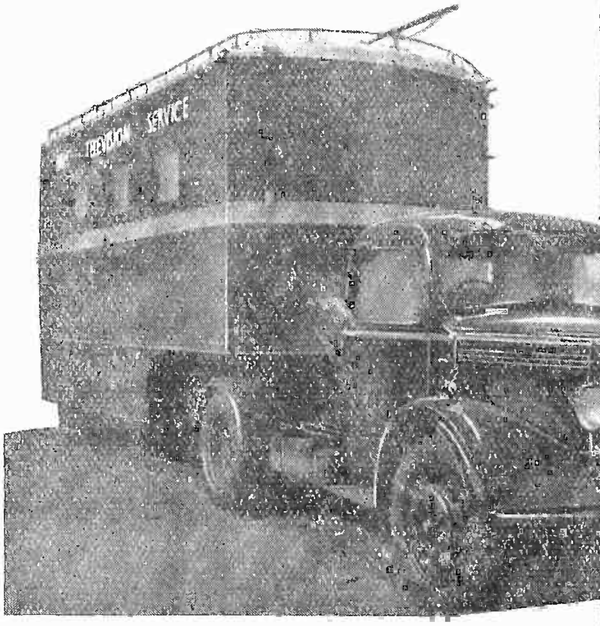

The photograph above shows the new mobile control room, manufactured by Pye Ltd., to the B.B.C.'s specification for television outside broadcasts. On arrival at the O.B. Point, the motor is usually detached from the trailer

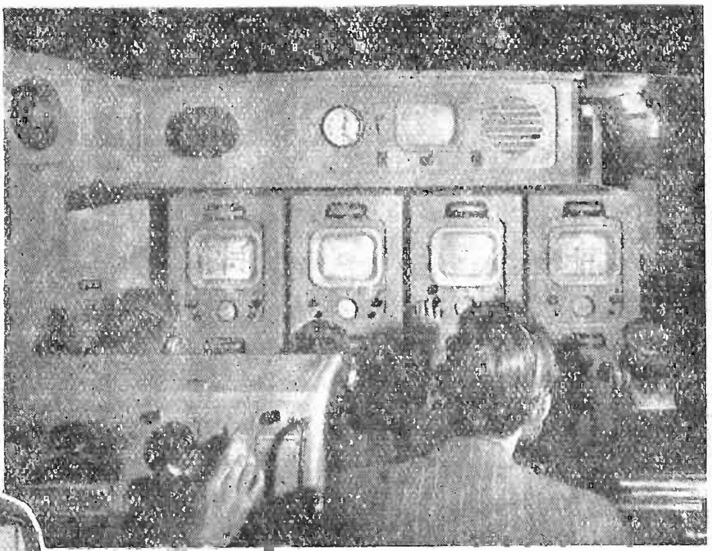

Top Right: Of the four operators sitting in front of the monitors, three look after one camera channel each, and the fourth (third from left) is the vision mixer, who makes the change-overs from one camera to another. In the right foreground is the producer, and on the left the sound mixer.

The photo above shows one of the "PHOTICON" cameras which are used on television outside broadcasts with the mobile television control room. Four lenses, of different focal lengths, are mounted in the turret assembly at the front of the camera, and the required lenses may be quickly selected by rotating the handle next to the viewfinder.

These cameras have an electronic viewfinder which shows the picture as televised by the camera.

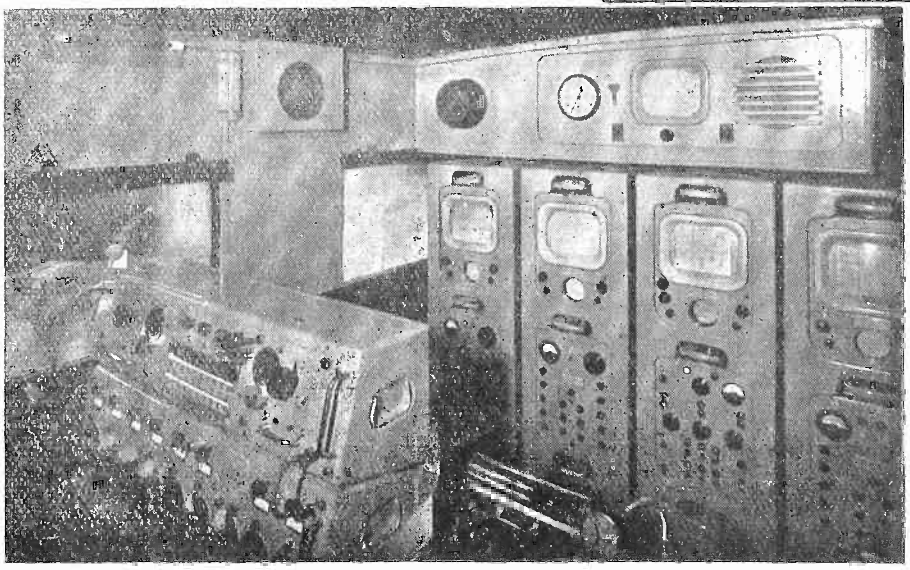

Left: Up to three television cameras can be used simultaneously, and the picture from each displayed on a separate monitor tube. Another tube (third from the left) monitors the picture being sent out from the control room. The television screen next to the clock shows the picture transmitted from Alexandra Palace. The panel in the left foreground is the sound mixer, where the microphone outputs are blended and their volume controlled

[Photos by courtesy of the B.B.C.

Cathode-Ray Tubes with Post-Deflection Acceleration

By W. G. WHITE, M.Sc.(Eng.), A.M.I.E.E.*

IN some case equipments have been built in which the frequency response characteristics of the electrical circuits are greater than the abilities of ordinary cathode-ray tubes to record. Even with the maximum voltage and beam current permissible for tubes of a given design the traces have remained invisible.

In other cases it is desired to project, by optical means, an enlarged image of a recurrent trace, or a transient, which can be easily seen by direct viewing. The light output of ordinary cathode-ray tubes is insufficient to give a satisfactory enlargement of the picture.

It sometimes happens that a presentation of a signal trace with a particular design of tube is of very low brightness due possibly to modifications in the original design having been made in order to enlarge some factor, such as range. By changing the tube type and operating voltages a satisfactory picture could easily be obtained, but such a radical change, involving the scrapping of a complete equipment and the development of a new one, would take a considerable time and would involve great expense. In some circumstances, especially in war time, such a re-design may be out of the question.

Electronic apparatus has frequently to be fitted into a very limited space. This has led to the miniaturisation of many equipments. It may not be possible to design a miniature C.R.T indicator unit without some sacrifice of performance.

In the two examples first mentioned there is the possibility of designing a tube to work at a higher voltage. This solution has one drawback, namely, an increase in deflecting forces is necessary.

In all these cases there is the superficially attractive scheme of using a tube fitted with a post-deflection accelerator, which, ideally, would give an augmented brightness depending on the additional voltage, with no change in the deflecting forces or in the "line width" of the signal trace.

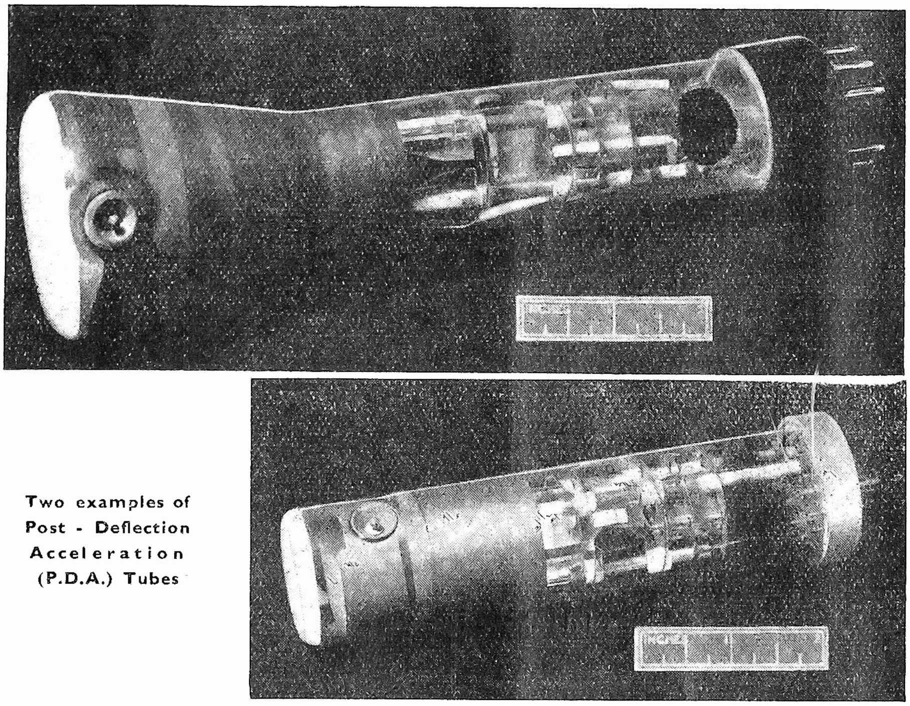

Two examples of Post - Deflection Acceleration (P.D.A.) Tubes

Ideal Post-deflection Acceleration Cathode Ray Tubes

An ideal P.D.A. tube may be imagined to consist of an ordinary tube to which is added an infinitely thin electrode at the back of the fluorescent screen maintained at a voltage, higher than that of the accelerating anode (Fig. 1).

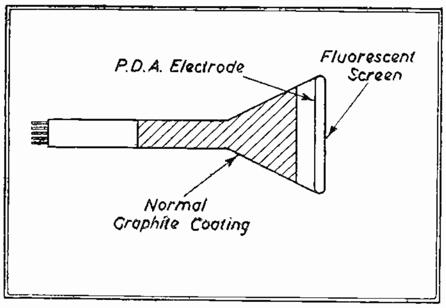

Fig. 1. Ideal form of P.DA. Tube

Such an electrode would not impede the flow of electrons through it or disturb the distribution of electric and magnetic fields over the path of the beam, but would give the electrons a final boost in velocity, resulting in an increased brightness. Measuring all voltages from the cathode, if the P.D.A. voltage were twice the accelerator voltage the brightness would be increased in the ratio of 4 because, to a first approximation, the brightness is proportional to the square of the overall voltage. This wonderful improvement would be obtained in tubes of both electrostatic and magnetic type. It remains to be seen how closely practical designs of P.D.A. tubes approach the ideal.

Construction of Practical P.D.A. Tubes

A cathode-ray tube having one post-deflection accelerator is shown in Fig. 2. The P.D.A. takes the form of a band of graphite on the inner circumference of the glass envelope and is situated near the fluorescent screen. The electrode is separated from the usual graphite coating which is "common" with the accelerating anode, by a clear band of glass. It has been found to be an advantage to coat the intermediate band between the two graphite electrodes with a high resistance material such as jeweller's rouge. This has the effect of tapering off the potential gradients which would otherwise exist between the edges of the adjacent bands of graphite. A tube of this type is suitable for operation with a P.D.A. voltage about twice that of the

---

* Ministry of Supply, R.A.E. Farnborough.

anode. Many such tubes are in use.

An example of a tube having three P.D.A.'s is indicated in Fig. 3. Tubes of this type have been made in America by the DuMont Co. and are suitable for operation at an overall voltage of 20 KV and an anode voltage of 2 KV thus giving a voltage ratio of 10. It is stated that such tubes can be run with ordinary time base supplies. The increase in brightness expected would be of the order of 35 times and this would permit a very useful enlargement of a picture to be made.

Features of Practical P.D.A. Tubes

In electrostatic tubes it is most desirable to keep the deflecting plates, and therefore the anode, at earth potential. Consequently, if the tube is run at a higher voltage, the insulation of the heater winding of the tube and of other components at cathode potential becomes more difficult. By the use of a P.D.A. tube the anode can be run at earth potential, the cathode at the normal voltage below earth potential and the P.D.A.'s at a potential above earth.

Owing to the additional acceleration of the P.D.A. tube being distributed over a portion of the path of the beam, the electrons do not pursue a straight line path after deflection as they do in an ordinary tube. This is shown in Fig. 4, where the deflection sensitivity is reduced by the factor OB/OA. For a tube with one P.D.A. working with a voltage ratio of 2/1 the reduction in sensitivity is about 1.0/1.2.

In many cases it would be quite satisfactory to accept the somewhat reduced deflection sensitivity of the P.D.A. tube in exchange for the greatly increased brightness. There is also the possibility of restoring the lost sensitivity by an optical system. This would be easily arranged if the tube were being used either for photography or projection work. For ordinary viewing it would involve the addition of a lens which would be a disadvantage. If in this case it were necessary to restore the deflection to the original value, larger deflecting forces in the ratio of 1.2/1.0 (=S) would be required.

Disadvantages of Practical P.D.A. Tubes

The chief disadvantages of a practical P.D.A. tube are that the addition of the accelerator may cause the electric fields in the neighbourhood of the P.D.A. electrodes to lose their radial symmetry. This may cause lack of linearity in a pattern using polar co-ordinates and, in the case of a pattern using rectangular co-ordinates, there may be distortion of the pattern. This is a very serious practical problem, but, by careful attention to the geometrical proportions of the electrodes, tube manufacturers have been able to keep the distortion in these tubes to very small values. Some of the distortion is due, in electrostatic tubes, to the deflecting plates being placed in succession along the tube axis. Less distortion would occur in magnetic tubes in which the two pairs of deflecting coils have their deflecting centres at a common point on the axis.

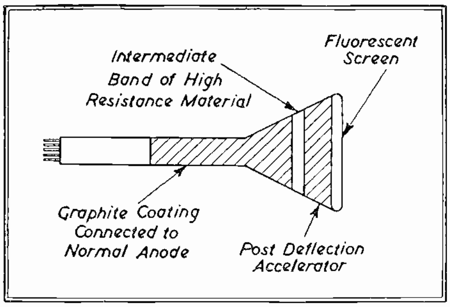

Fig. 2. Practical form of P.D.A. tube

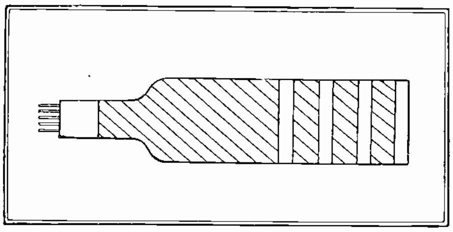

Fig. 3. 3-stage P.D.A. tube

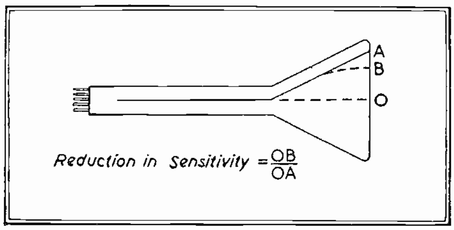

Fig. 4. Reduction in sensitivity of P.D.A. tube (see text)

In those cases in which it is necessary to restore the deflection of a P.D.A. tube to that of the ordinary tube, the angle of deflection at the deflection system must be increased by the factor S. In electrostatic tubes this may cause an appreciable increase in deflection defocusing due to the beam approaching more closely the non-uniform electrostatic field in the region of the edges of the deflector plates nearest the screen. In magnetic tubes the increase in deflection defocusing is likely to be of a smaller order altogether because of the greater volume of the field and the absence of a discontinuity such as is present in electrostatic tubes when the beam strikes the plates. The greater volume of magnetic field accounts for the greater deflecting power which is usually required for magnetic tubes.

Another point is that, occasionally, local distortion of the trace is seen in the vicinity of the side contact for the P.D.A. electrode. This may be due to deformation of the glass caused by the insertion of the contact itself or to a high resistance contact between the terminal and the graphite. This trouble can certainly be avoided by careful manufacture.

Comparison of P.D.A. Tubes with Ordinary Tubes

Deflecting Forces and Powers

In the case of electrostatic tubes the deflecting voltage, for a given angle of deflection,[2] is proportional to the anode voltage. The deflecting power is proportional to the square of the deflecting voltage and therefore to the square of the anode voltage.

There is a fundamental difference between electrostatic and magnetic tubes, namely, the deflecting current in the latter tubes is proportional to the square root of the voltage of the anode, so that the deflecting power is proportional to the anode voltage.

The effect of the P.D.A. on the deflecting forces and powers in those cases where it is necessary to restore the deflection to its full value is shown in Table 1 for the case of a tube with one P.D.A. working at a voltage of twice the accelerating voltage and for which the value of S is assumed to be 1.2. Similar information is shown in Table 2 for the case of a tube with three P.D.A.'s working at a voltage ratio of 10 and an assumed value of S of 1.4.

Before leaving the question of deflecting powers it would be well to notice the values involved in watts because, if the power is a small quantity, it will be relatively unimportant although a ratio of two powers may be large. In order that this may be done it is necessary to make some assumptions

TABLE 1

Comparison of Deflecting Force and Power for Ordinary Tube and P.D.A. Tube having one Accelerator and Voltage Ratio of 2

	Ordinary Tube at V volts	Ordinary Tube at 2V volts	P.D.A. Tube Acc voltage V P.D.A. voltage 2V
Brightness	1.0	4.0	4.0
Deflecting Voltage Electrostatic	1.0	2.0	1.2
Deflecting Power Electrostatic	1.0	4.0	1.44
Deflecting Current Magnetic	1.0	1.41	1.2
Deflecting Power Magnetic	1.0	2.0	1.44

because not all the quantities involved are fundamental.

The following figures are taken as a basis for calculation:—

Maximum deflection angle—16°.

Neck diameter of magnetic tube—36 mm.

Area embraced by deflecting coil—50 × 36 mm.

Reluctance of iron neglected —.

Length of magnetic path in air 36 mm.

Capacitance between a pair of plates—15 μμF.

Resistance of plate leaks—1 MΩ per plate.

Anode voltage of ordinary tube—1,250 volts.

Deflecting voltage for 16°—125 volts.

Time base of saw tooth shape and 1,000 per second recurrence.

Then for an ordinary tube working at 1,250 volts and with magnetic deflection the radius of curvature of the path of the beam in the deflecting field is given by:—

$$R \text{ cms.} = \frac{3.36\sqrt{\text{voltage}}}{\text{H gauss}}$$

Taking R as 9 cms., H = 13.

The energy stored in the field is $\frac{H^2}{8\pi}$ ergs per cc.

Volume of field = 5 × 3.6 × 3.6 = 65 ccs.

$$\therefore \quad \text{Energy stored} = \frac{13^2}{8\pi} \times 65 =$$

440 ergs at max. deflection.

$$\therefore \quad \text{Power} = 440 \times 2 \times 1000 \times 10^{-7}$$
$$= 0.1 \text{ watt.}$$

To this should be added the I^2R loss in the resistance of the coils.

With electrostatic deflection the energy stored per sweep is

$$\tfrac{1}{2}CV^2 = \tfrac{1}{2} \times 15 \times 10^{-12} \times 125^2 \times 10^7$$
$$= 1.2 \text{ ergs}$$

Hence, the power

$$= 1.2 \times 10^{-7} \times 2 \times 1000$$
$$= 2.4 \times 10^{-4} \text{ watts}$$

The loss in the plate leaks per pair is $\frac{V^2}{R}$

Where V = r.m.s. voltage $= \frac{125}{\sqrt{3}}$

$$\therefore \quad \text{Loss in R} = \frac{1.56 \times 10^4}{3} \times \frac{10^{-6}}{2}$$
$$= 0.0026 \text{ watt}$$

Total loss = 0.003 watt

Hence, the economy in the magnetic tube with P.D.A. is (2 − 1.44) × 0.1 = 0.056 watt.

For electrostatic: (2^2 − 1.44) × 0.003 = 0.0077 watt

The magnetic tube shows an economy in watts about seven times as great as the electrostatic tube. In both cases the powers involved are small. For the tube with three P.D.A.'s the economies, on the above figures would be 0.8 watt and 0.3 watt for magnetic and electrostatic tubes respectively. The approximations in the above calculations favour the electrostatic tube.

In practice a particular type of valve is limited as to current and voltage and in order to supply an increase in one or other of these factors a point is reached where it is necessary to use a larger valve or to use an additional valve. This involves an increase in space and an increase in power for heater supplies. These changes also involve an increase in the rating of the power pack supplying the time base unit.

Line Width at the Centre

If the aberrations in the lens be neglected, it can be shown[123] that the line width at the centre of a cathode-ray tube is dependent on the voltage equivalent of the cathode temperature, namely $T/11600$ and is inversely proportional to the square root of the accelerating voltage.

If the line width at the centre at voltage V_1 be denoted by F_1 then the line width at voltage V_2 will be: L.W. = $F_1\sqrt{V_1/V_2}$

In most cases the spot of a cathode-ray tube is not aberrationless. Mechanical tolerances make it difficult to ensure that the beam is co-axial with the successive apertures in the focusing system, particularly in the case of electrostatic tubes. Another difficulty is that the plane containing an aperture may be tilted with respect to the normal to the beam. Such defects cause the spot shape to be other than circular. The result of these defects on the line width depends upon the direction of the line in relation to the spot deformity and is not usually the same in the two deflection axes. For simplicity, the effect of the spot deformations on the line width will be denoted by an addition to the central line width of an amount F_2. It will be assumed that F_2 is related to the anode voltage in the same way as F_1. The line width at the centre and at voltage V_1 may, therefore, be expressed as : L.W. = $F_1 + F_2$.

TABLE 2

Comparison of Deflecting Force and Power for Ordinary and P.D.A. Tubes with Three Accelerators and Voltage Ratio of 10

	Ordinary Tube at V volts	Ordinary Tube at 10V volts	P.D.A. Tube Acc voltage V P.D.A. voltage 10V
Brightness	1.0	35	35
Deflecting Voltage Electrostatic	1.0	10	1.4
Deflecting Power Electrostatic	1.0	100	1.96
Deflecting Current Magnetic	1.0	3.16	1.4
Deflecting Power Magnetic	1.0	10	1.96

In the case of P.D.A. tubes there is a decrease in line width as compared with the ordinary tube due to the reduced time of transit from the deflection centre to the screen. This reduction is proportional to the reduced sensitivity of the P.D.A. tube.[1]

Deflection Defocusing

As previously mentioned, deflection defocusing is due to the beam being in a non-uniform part of the deflecting field when deflected by the maximum angle. It is usually not a negligible quantity in electrostatic tubes. It is greater with small spacings between deflector plates and this spacing is reduced to a minimum in order to obtain a high deflection sensitivity. The amount of deflection defocusing is not affected by changing the voltage and so is a constant quantity for a given angle of deflection. The amount of defocusing usually varies approximately as the square of the angle of deflection. This is represented by F_3 for ordinary electrostatic tubes.

Deflection defocusing in magnetic tubes has already been mentioned and this factor may be denoted by an increase in line width of F_4 where F_4 is very much smaller than F_3.

The increase in deflection defocusing in P.D.A. tubes when the deflection is restored to its full value may be allowed for by assuming that the terms S_3 and S_4 are increased by the square of the factor S.

The various components of the line width are shown in Tables 3 and 4 for both electrostatic and magnetic tubes for the two specimen P.D.A. tubes mentioned.

Comparison of Line Width of Ordinary and P.D.A. Tubes

TABLE 3

P.D.A. Tube with One Accelerator $S = 1.2$ Voltage Ratio $= 2$

	Ordinary Tube at V volts	Ordinary Tube at 2V volts	P.D.A. Tube Anode V Volts P.D.A. at 2V Volts
Line width at centre, Electrostatic and Magnetic	$F_1 + F_2$	$0.7\ (F_1 + F_2)$	$0.83\ (F_1 \quad F_2)$
Line width at edge, Electrostatic	$F_1 + F_2 + F_3$	$0.7\ (F_1 + F_2) + F_3$	$0.8\ (F_1 + F_2) + 1.44\ F_3$
Line width at edge, Magnetic	$F_1 + F_2 + F_4$	$0.7\ (F_1 + F_2) + F_4$	$0.83\ (F_1 + F_2) + 1.44\ F_4$

TABLE 4

P.D.A. Tube with 3 Accelerators $S = 1.4$ Voltage Ratio $= 10$

	Ordinary Tube at V Volts	Ordinary Tube at 2V Volts	P.D.A. Tube Anode V Volts P.D.A. at 10V Volts
Line width at centre, Electrostatic and Magnetic	$F_1 + F_2$	$0.32\ (F_1 + F_2)$	$0.7\ (F_1 + F_2)$
Line width at edge, Electrostatic	$F_1 + F_2 + F_3$	$0.32\ (F_1 + F_2) + F_3$	$0.7\ (F_1 + F_2) + F_3$
Line width at edge, Magnetic	$F_1 + F_2 + F_1$	$0.32\ (F_1 \cdot F_2) + F_1$	$0.7\ (F_1 + F_2) + 2\ F_4$

F_1 = Line width at centre of screen with no aberrations.
F_2 = Additional width at centre of screen due to all forms of spot deformation.
F_3 = Additional width at edge of screen due to electrostatic deflection defocusing.
F_4 = Additional width at edge of screen due to magnetic deflection defocusing.

General Assessment of the Results

The effect of an increase in voltage on the brightness of a trace is a very striking one.

The use of a P.D.A. tube shows a saving of deflecting power in both electrostatic and magnetic tubes, although neither the percentage changes or the numerical values of watts are identical.

Difficulty arises in assessing the merits of a change in line width with voltage. This feature is most favourable to the ordinary tube at the centre of the screen, but tends to vanish as the edge of the screen is approached, depending on the relative importance of the terms $F_1F_2F_3F_4$.

In the case of a television set it could be argued that line width is unimportant so long as adjacent lines do not overlap. Or, again, it might be considered that the line width should be adjusted by the focus control, so that no intermediate dark spaces between the lines are discernible. Alternatively, this is sometimes accomplished by a cross-modulation by a high frequency sine wave.

In a radar set it would be difficult to show that the readability of an " echo " is inversely proportional to line width.

Of the various factors which have been discussed, J. R. Pierce[1] considers that it is justifiable to take into account two items only, the deflecting force and the line width at the centre. To illustrate this point the ideal P.D.A. tube will be compared with the ordinary tube working at the P.D.A. voltage.

If the voltage of an ordinary electrostatic tube is increased by the factor K, the deflecting force must be increased by K also, so that the sensitivity is reduced by $1/K$. On the other hand, the line width at the centre, neglecting aberrations, will be reduced by the factor $(K)^{1/2}$.

Hence the ratio:

$$\frac{\text{Deflection Sensitivity}}{\text{Line Width}} \propto 1/K \,.\, K^{1/2}$$
$$\propto 1/K^{1/2}$$

This ratio is called the sensibility and expresses the sensitivity in terms of line width. For the P.D.A. tube there would be no change in deflection sensitivity and no change in line width, so that the sensitivity is constant.

Consequently,

$$\frac{\text{Sensibility of P.D.A. tube}}{\text{Sensibility of Ordinary tube}} \propto K^{1/2}$$

This ratio is taken as the measure of the superiority of the electrostatic P.D.A. tube over the ordinary tube.

In the case of a magnetic tube, because the deflecting current increases as $(K)^{1/2}$ the ratio of tube sensibilities is constant. This is taken to show that " there can be no gain resulting from the use of P.D.A. in the case of magnetic tubes."

This line of argument does not seem justifiable to the present writer. There is the outstanding fact that the brightness may be increased by a factor of 35 without changing the deflecting forces. The simplification made in the question of focus is not always justifiable in practice. It is not generally agreed that the deflecting forces and line width may always, or even frequently, be equated to one another.

The original paper[1] should be consulted for the proof that the equations used for expressing the sensibility of the ideal P.D.A. tube also apply to the practical tube.

Tests on a P.D.A. Tube

A number of tests have been made by the writer on a service type of P.D.A. tube. These tests fully confirm the points mentioned in these notes.

Use of a P.D.A. Tube to Reduce the Line Width

In cases where an ordinary tube is quite satisfactory as regards brightness, but where it is desired to work with as small a spot as possible, a P.D.A. will enable the same brightness to be obtained with a considerably reduced value of beam current. This smaller beam current will have a substantially smaller line width at the centre as well as much reduced deflection defocusing. An experiment on these lines made with a single P.D.A. tube caused the central line width to be reduced by a factor of 0.7.

Conclusion

Post-deflection accelerator tubes can be constructed so as to approach the ideal well enough to be of great utility.

In both electrostatic and mag-

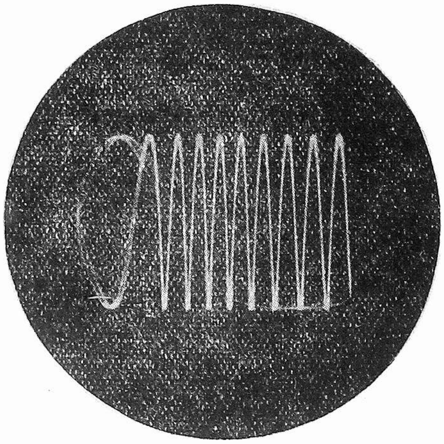

Fig. 5a. Oscillogram of ordinary C.R.T.

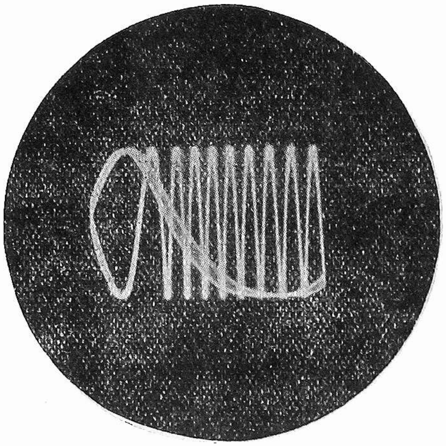

Fig. 5b. P.D.A. added, showing possibility of pulse exciting the P.D.A.

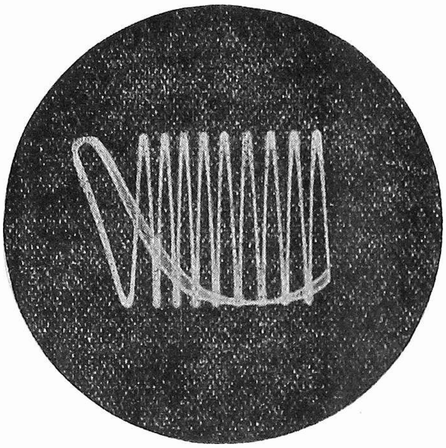

Fig. 5c. As b, but with amplitude reduced to that of a

netic deflection types of tube useful economies in deflecting power can be obtained.

There is no obvious way of combining the various factors of the tube in one general formula expressing the overall advantage of a P.D.A. tube. As good a way as any seems to be to consider the P.D.A. tube with its greatly enhanced brightness, its somewhat reduced sensitivity and line width and its unchanged deflecting power.

Acknowledgments

The author's thanks are due to the Chief Scientist, Ministry of Supply, for permission to publish this paper. The illustrations are Crown copyright and are reproduced with the permission of the Controller of H.M. Stationery Office.

APPENDIX

To Determine the Anode Voltage at which the Magnetic and Electrostatic Deflecting Energies are equal

The difference between electrostatic and magnetic cathode-ray tubes in the matter of the accelerating voltage indicates that on purely theoretical grounds there will be a value of accelerating voltage at which the energies in the electrostatic and magnetic fields will be equal. This can be determined as follows:—

Electrostatic Tubes

Denoting the length, breadth and spacing between deflector plates by L, B and s respectively, the capacitance of a pair of plate $C =$

$$\frac{LB}{4\pi\ s\ 9 \times 10^{11}}$$

Energy stored $= 1/2\ CV^2$

$$= \frac{L.B\ V_D^2}{8\pi\ s\ 9 \times 10^{11}} \text{ joules}$$

$$\text{Since } \tan \alpha = \frac{L}{2\ s}\ \frac{V_D}{V_A}$$

$$\therefore \quad V_D = \frac{\tan \alpha\ 2\ s\ V_A}{L}$$

$$\therefore \quad \text{Energy} =$$

$$\frac{L.B.}{8\pi\ s\ 9.10^{11}} \cdot \frac{\tan^2 \alpha\ 4\ s^2\ V_A^2}{L^2}$$

$$= \frac{Bs}{L} \cdot \frac{\tan^2 \alpha\ V_A^2}{2\pi\ 9.10^{11}} \quad \text{joules}$$

Magnetic Tubes

$\text{Sin}\ \alpha = \dfrac{L}{R}$ where R = radius of curvature of path of beam in the field

$$\therefore \quad \text{R} = \frac{L\ (1 + \tan^2 \alpha)^{1/2}}{\tan \alpha}$$

$$\text{Also R} = \frac{3.36\ (V_A)^{1/2}}{H}$$

$$\therefore \quad \text{H} = \frac{3.36\ (VA)^{1/2} \tan \alpha}{L\ (1 + \tan^2 \alpha)^{1/2}}$$

$$\therefore \quad \text{H}^2 = \frac{11.3\ V_A \tan^2 \alpha}{L^2\ (1 + \tan^2 \alpha)}$$

$$\text{Energy} =$$

$$\frac{H^2}{8\pi} \times \text{Vol. of field} \times 10^{-7} \text{ joules}$$

$$= \frac{11.3\ V_A \tan^2 \alpha}{L^2\ (1 + \tan^2 \alpha)}\ \frac{L.B.\ s\ .\ 10^{-7}}{8\pi}$$

$$= \frac{11.3\ V_A \tan^2 \alpha}{8\pi\ (1 + \tan^2 \alpha)} \cdot \frac{Bs}{L} \cdot 10^{-7} \text{ joules.}$$

Equating the electrostatic and magnetic energies:—

$$\frac{Bs}{L} \cdot \frac{\tan^2 \alpha\ V_A^2}{2\pi\ 9.10^{11}} =$$

$$\frac{11.3\ V_A \tan^2 \alpha}{8\pi\ 10^7\ (1 + \tan^2 \alpha)}\ \frac{Bs}{L}$$

So that, assuming that B, s and L are the same for the two cases

$$V_A \text{ (in kilovolts)} = \frac{250}{1 + \tan^2 \alpha}$$

For practical reasons B and s in the magnetic tube are usually larger than the values for the electrostatic tube because they are controlled by the external diameter of the neck of the tube. This causes the value of kilovolts at which the energies are equal to be less than 250.

It follows from the above that the use of post-deflection acceleration in magnetic tubes will result in greater economies in deflecting power over the usual range of operating voltages than in electrostatic tubes.

References

[1] Pierce, J. R.: "After Acceleration and Deflection," *Proc. I.R.E.*, Jan., 1941, p. 28.

[2] Maloff, I. J., and Epstein, D. W.: "Electron Optics in Television," McGraw Hill Book Co.

[3] Moss, H.: "Engineering Methods in the Design of the Cathode Ray Tube," published privately by A. C. Cossor, Ltd.

[4] Cosslett, V. E.: "Introduction to Electron Optics," Oxford University Press.

Measuring Dosage: Electronic Aids in Radiotherapy

By H. A. HUGHES, B.Sc., A.R.C.S., A.Inst.P.*

ADVANCES in medical science have been closely related to the development of instruments, on the one hand capable of contributing information on biological phenomena required for diagnostic purposes, and on the other, providing a measurement of therapeutic dosage. The purpose of this article is to indicate the part played by electronics in furthering one particular branch of instrumentation in medicine, *viz.*, dosage measurement in radiotherapy.

The types of ionising radiation used for therapeutic purposes are X-rays, and the beta and gamma rays from radium and other radioactive elements. In general, their medical potentialities arise from the fact that in certain quantities they will inhibit the growth and development of living cells. The biological effects produced are due to the action of energy transferred from the radiation to the cells by the mechanism known as ionisation. It is of prime importance that the quantity of radiation received by a patient be accurately measurable, as an overdose may have serious consequences. Further, the most useful measure of dosage is that physical quantity which can be correlated to the biological or clinical effect of the radiaton.

Early Methods of Dosimetry

Many attempts have been made to develop a satisfactory method of measuring X-ray and gamma-ray quantity. Roentgen himself called attention to possible chemical reactions, some of which were tried in 1900. Chemical dosemeters, after some trial, were found unreliable and not suitably related to biological effect. The degree of blackening of silver bromide paper, which was developed after exposure, was used by Kienboch in 1905. The brightness of fluorescence on a screen compared to the light from a standard lamp (measured in terms of photo-current from a barrier layer cell by Hertz, 1936), the change in resistance of a selenium cell, changes observed in biological systems, and the direct measurement of heat produced by the absorption of X-rays were all tried as methods of measurement. However, for various reasons none of these methods was found satisfactory. It was eventually recognised that the most suitable basis for clinical measurement is the ionisation produced in air. This is because for a given incident X-ray intensity the energy conversion within a given small mass of tissue is nearly the same as that within the same mass of air. From the measurement of the ionisation produced in a small volume of air embedded in tissue it is therefore possible to assess the dose delivered to the tissue at the point in question.

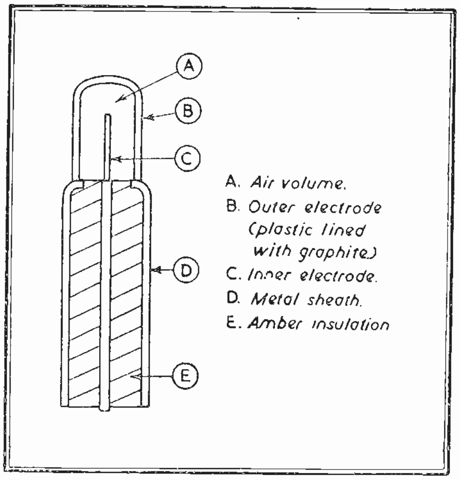

Fig. 1. Condenser chamber

Dosimetry by Ionisation Measurement

It is convenient to divide the subject of measurement of radiation into three parts: (1) X-rays, (2) rays from radium, (3) rays from other radioactive substances. Many of the techniques are, however, common to all ionising radiations, and these will be described before giving details of specific instruments for one type.

The design of ionisation chambers is a subject beyond the scope of this article. In general, however, an ionisation chamber implies the presence of two electrodes with a potential difference between them adequate to ensure saturation conditions, and a filling gas, in this case air, to be ionised by the X-rays. The ionisation may be measured in two ways: either (a) the chamber may be used as a capacitor, the drop in voltage caused by its partial discharge being measured on some suitable instrument, or (b) the current flowing between electrodes during discharge may be continuously measured.

(*a*) *Condenser Chamber Apparatus.*

The simplest type of condenser chamber instrument consists of a thimble type chamber of about 1 c.c. air volume connected across a capacitor. Fig. 1 shows diagrammatically the usual form of this type of chamber. Three types of condenser chambers are shown in Fig. 2. Provision is made to charge the inner electrode C to a potential of a few hundred volts, measured by connecting it to some form of electrometer. A very compact commercial instrument of this type is the Victoreen condenser "r" meter (Fig. 3). The necessary voltage (about 400) is generated by a simple electrostatic friction pump and is read on a single fibre electrometer conveniently calibrated in X-ray dose units. After exposure of the chamber the residual charge is shared with that of the electrometer and a direct reading of X-ray dose is obtained. However, the condenser chamber unit of this instrument is unsuitable for dosage measurement in body cavities. For this reason its usual function is the measurement of the X-ray output of therapy equipment and it is also a convenient form of sub-standard instrument.

To overcome the disadvantages of

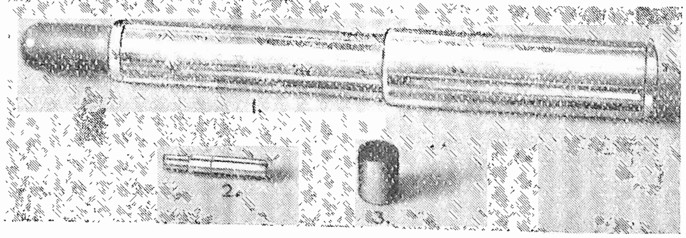

Fig. 2. Types of condenser chambers

---

* Physics Dept., Medical School, Guy's Hospital, London, S.E.1.

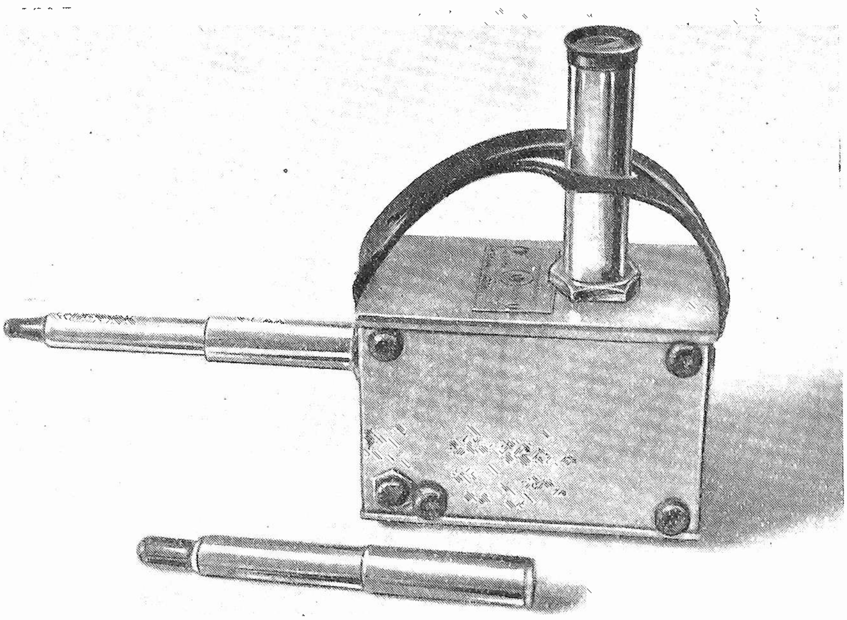

Fig. 3. Victoreen condenser " r " meter

using the somewhat delicate electroscope for the measurement of voltages on chambers, etc., an extremely compact electronic apparatus was developed by Farmer.[1] This is shown in diagrammatic form in Fig. 4. The voltage to be measured is applied to the grid of an electrometer triode, *e.g.*, type E.T.I.[2] However, since these voltages are of the order of a few hundred volts means are provided for extending the working range of the valve. This is done by employing the E.T.I. as a cathode follower. If a cathode resistance alone were employed to provide feed-back, large voltages would appear at the E.T.I. anode; the P.D. across the valve must be kept to a low value (about 9 volts) to avoid the flow of appreciable grid currents. A high impedance valve is therefore placed in series with the E.T.I. The bias potential for the grid of this valve is obtained directly from the voltage drop in the electrometer valve itself, and consequently the P.D. between anode and filament of the latter is kept to its required low value. The lead from the grid of the E.T.I. to the discharge stand is surrounded by an electrostatic screen connected to the filament of this valve, the potential of which follows closely that of the grid. This reduces the capacitance of this lead to earth to a minimum, which ensures that nearly the whole of the voltage on the chamber appears at the E.T.I. grid. This instrument, shown in Fig. 5, which is now on the market, has many other applications such as the measurement of very small currents and very high resistance.

(*b*) *Chamber Lead Apparatus.*

The type of instrument consisting of an ionisation chamber feeding into a high resistance, the voltage across which is measured by means of an electrometer valve, has been used by various workers, including Kaye and Bell[3] and Langmead.[4] In Langmead's apparatus the electrometer valve was in the same unit as the chamber, thus avoiding the use of a cable connexion between chamber and valve, which would introduce a large time constant into the circuit. This unit was followed by two further stages of D.C. amplification, the overall gain being about 10^6. To avoid large current drain on supply voltage sources, the main anode current flowing in the circuit was balanced out by means of an auxiliary circuit. The sensitivity of the instrument was such that a change of one volt across the 10^{10} ohm grid resistance produced a current output of 800 μA. Thus a relatively insensitive output meter could be used. As in Kaye and

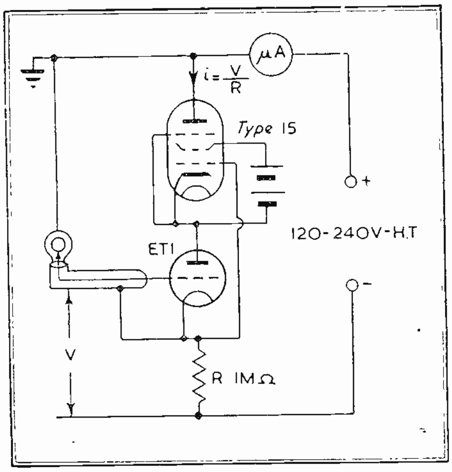

Fig. 4. Farmer valve electrometer

Fig. 5. Radiological type of Baldwin-Farmer electrometer

Bell's dosemeter, the grid bias of the electrometer valve was maintained by three Weston standard cells.

The problem of making stable high resistances of the order of 10^{12} ohms temperature independent is rather a difficult one, and other means of measurement of small currents have been devised which do not involve their use. An extremely useful circuit has been described by Kemp[5] for the direct comparison of the magnitudes of two ionisation currents. The circuit principle embodies a capacity potential divider, the scale of which may be calibrated in actual values of the ratio of two currents. Consider the arrangement shown in Fig. 6. If the ionisation current in chamber A is N times that in B, and if P is at earth potential when all the switches are closed and when they are open, then $N \cong \frac{C_1}{C_2}$, if the capacities to earth of the collecting systems are equal and much greater than C_1 and C_2. If the current from one chamber is due to the radiation from a standard source, and the capacity potential divider is calibrated, then the other chamber may be used for measurement of an unknown source. In order to find the correct setting of the potential divider for the condition of balance, the junction P is connected to the grid of an electrometer triode. A microammeter may be included in the anode circuit of the latter, and the setting which maintains the anode current constant before and after the switches are opened is the required one. Alternatively, the voltage developed across a load resistance in the anode circuit may be applied to an ordinary valve amplifier, followed by an electronic indicating device of the "magic-eye" type. The use of a microammeter gives higher accuracy. With the second circuit the power supply to the amplifying circuit may be utilised to supply the chamber volts. Measurements are independent of valve characteristics and changes in them or voltage supplies.

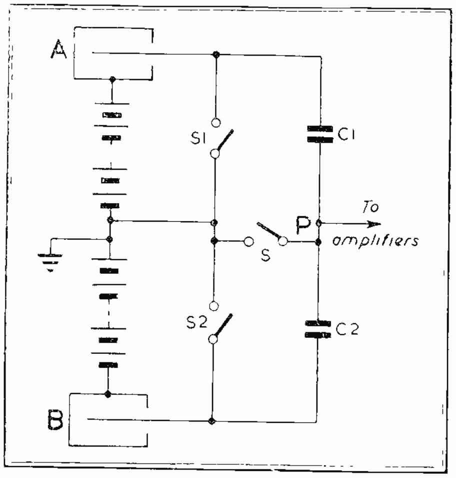

Fig. 6. Basic circuit for comparison of ionisation currents (Kemp)

X-rays

If it is desired to measure the quantity of X-radiation received in body cavities during a normal treatment, a condenser chamber of suitable design is the most convenient apparatus to use. An electrometer for use with these chambers has already been described. It may be mentioned in this connexion that a similar technique is applicable to the measurement of the exposure of radiological personnel to stray X and gamma radiation. Small condenser chambers of the dimensions of a fountain pen are carried by the staff during their normal hours of duty and provide a means of estimating the degree of exposure suffered by individuals.

A form of instrument consisting of an ionisation chamber at the end of a flexible cable, and giving a direct reading of intensity of radiation on a meter is obviously one which would be ideal in X-ray work. There are, however, certain difficulties in such a design. The most successful instrument of this type is the Siemens Momentan dose-rate meter, and this illustrates the practical limits which are imposed. The meter consists of an ionisation chamber in the form referred to, the current passing through a high resistance, the voltage drop across which is measured by an electrometer. The capacitance of the cable in parallel with the high resistance gives rise to a large time constant, and thus the meter reading lags behind the actual X-ray intensity at any instant. To reduce this the chamber is made large in order to produce as large an ionisation current as possible, and hence allowing the use of a lower resistance, the cable capacitance is lowered by making the cross-section broad, and a very sensitive but robust quadrant electrometer is used giving a full-scale deflection for a P.D. of about 4 volts. The unduly large size of the chamber makes this instrument unsuitable for the measurement of radiation at sharply defined points.

Langmead's apparatus,[4] already described, avoids the cable by having the electrometer valve in the same unit as the chamber. This leads to a somewhat cumbersome unit. A source of error is introduced by the variability of valve characteristics with time and supply voltage.

It would seem that the ideal electronic instrument should possess the following qualities: (1) a small effective time-constant for the input circuit; (2) independence of amplification on changes of valve characteristics due to age or supply voltages; (3) a linear relationship between ionisation current and meter reading. These requirements are met in a dosemeter described by Farmer.[6] It consists of an extremely small ionisation chamber connected by flexible cable to an amplifier, the output of which is applied to a milliammeter. The amplifier is designed with a large degree of negative feedback which serves to fulfil the above three conditions. From the circuit diagram shown in Fig. 7 it will be seen that the first of the two pentode stages of D.C. amplification has its cathode connected directly to a battery tapping, resulting in 4-5 volts P.D. across the electrometer valve. The second pentode V_3 has its cathode located by a different means using the auxiliary valve V_4. This has the advantage of keeping anode current changes of V_3 almost completely out of the battery, so avoiding unwanted coupling between this and the previous stages. Negative feedback is applied from output to input by the potentiometer R_3R_4.

The above instruments give a measurement of instantaneous dose rate. In cases where the dose rate from an X-ray tube is for technical reasons, subject to variation, or when the treatment times must be short, it is necessary to have a measure of the integrated dose. For some years the two principal integrating dosemeters used for deep therapy have been the Mekapion and the Hammer. They have similar structural designs, each comprising a thimble type ionisation chamber connected to the instrument head. The Mekapion employs an electrometer valve in the head to operate a relay when a certain charge has been dissipated in the

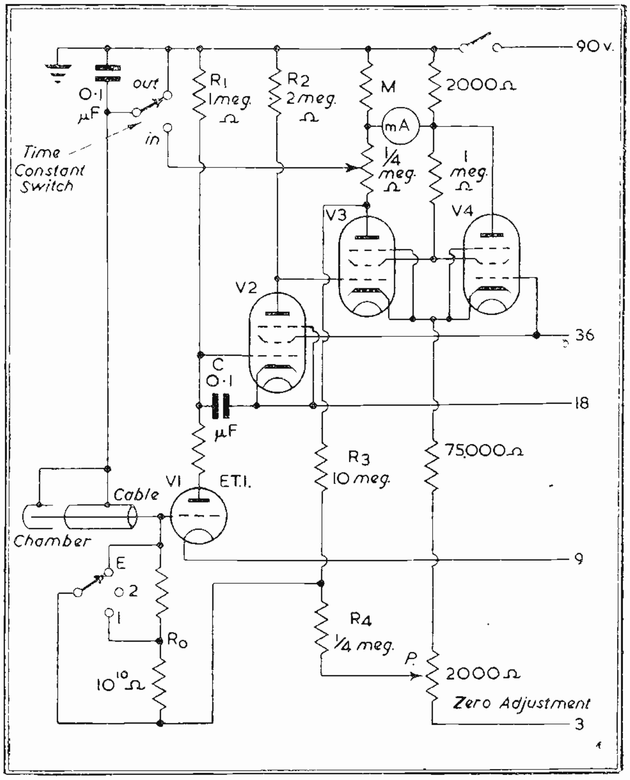

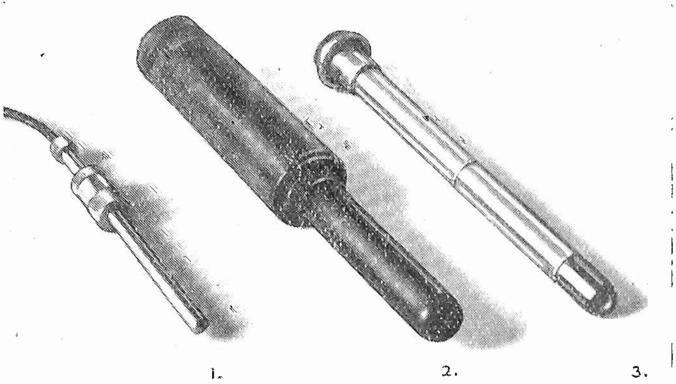

Fig. 8. Ionisation chambers for integrating dosemeters
(1) Farmer (2) Hammer. (3) Mekapion

Fig. 7 (*left*). Farmer feed-back amplifier for ionisation currents

Fig. 9 (*below*). Farmer integrating dosemeter using the small ionisation chamber shown in Fig. 8 (1)

chamber, while in the Hammer an electrostatic relay connected to the central electrode of the chamber operates the recording mechanism when the charge has dropped to a certain value. They are both reliable instruments, but possess the disadvantages of having bulky heads (see Fig. 8 (2) and (3)), and of using components which are irreplaceable in this country.

An instrument which measures integrated dose by means of a small chamber connected by flexible cable to the working parts has been devised, again by Farmer,[7] as shown in Fig. 9. There is a problem introduced here by having the large capacitance of the cable in parallel with the small chamber capacity, in that a drop of only about two volts of potential will result from an X-ray dose which is sufficient to discharge an ordinary dosemeter chamber through 200 volts. The circuit has thus to operate a recording and recharging mechanism with a voltage input of about two volts and to be independent of valve characteristics and mains voltage. In order to obtain an exact point in the small grid swing of the E.T.I. valve operated by the chamber at which a relay may be made to close, an oscillatory circuit is connected to its anode lead with reaction-coupling to the grid (*see* Fig. 10). At a certain grid

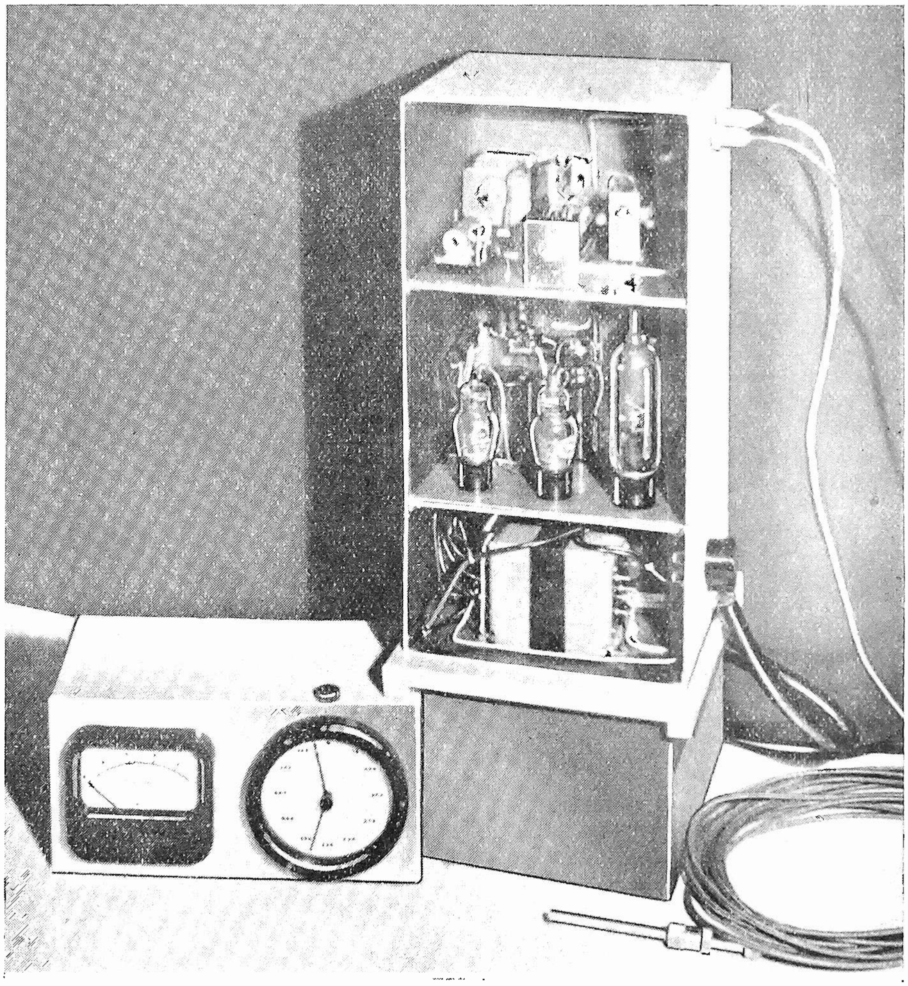

potential the valve will oscillate, the increase in anode current causing the relay to operate. This relay operates the recharging and recording mechanism of the instrument. For recharging, a fixed charge is given to the chamber in addition to that which it held when the circuit last tripped. Thus the interval between pulses will depend solely upon the dissipation of this charge by the X-rays in the chamber, and the relay will operate at precisely the same point each time. The only requirement for correct operation is that the voltage of the source supplying potential to the charging condenser is kept constant. The thermal delay switch ensures that a voltage lying within the normal working range of the valve is applied to the chamber for a short time after the instrument is first switched on. This avoids errors at the beginning of a treatment.

Radiation from Radium

Although beta-radiation from radium is sometimes used for treatment of superficial tumours, the deeper penetrating gamma-radiation has more general therapeutic value. Gamma-ray therapy is carried out according to one of two general methods, depending on whether the source of radiation is outside the body or within it. In the former (external irradiation), the gamma-rays come from radium plaques applied to the tumour; in the latter (interstitial treatment), radiation is carried out from radium sources inserted directly into diseased tissues. These two methods of treatment call for intensity measuring instruments of different types. The radiation from a plaque is best measured with a chamber-lead type instrument which need not be portable, while for interstitial radiation intensity measurement small condenser chambers are most useful. The differences between X- and gamma-ray measurement in practical therapy are two-fold. These differences arise from the following physical factors: (1) the intensities encountered in gamma-ray work are much lower than with X-rays; (2) the quantum energy of the gamma radiation from radium is much higher than that of therapeutic X-radiation. In order to keep the measurement time down to a minimum, condenser chambers must have smaller capacities and larger ionising volumes than with X-ray chambers. The higher quantum energies involved necessitate careful design of chambers from the point of view of materials, size, etc.

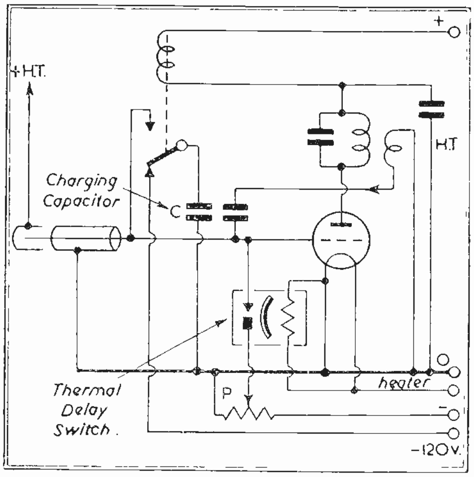

Fig. 10. Working principle of Farmer integrating dosemeter circuit

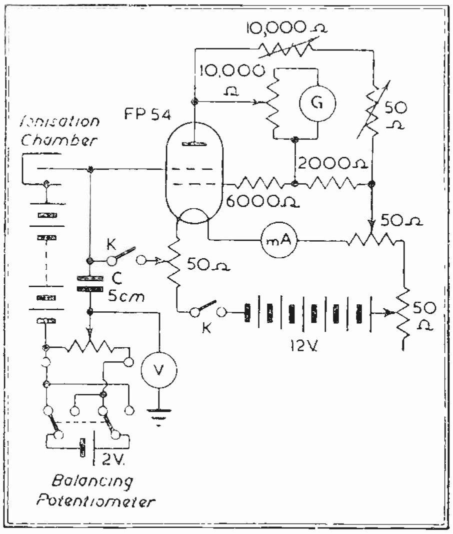

Fig. 11. Townsend balance method for measuring ionisation current incorporating electrometer valve bridge circuit of Du Bridge and Brown

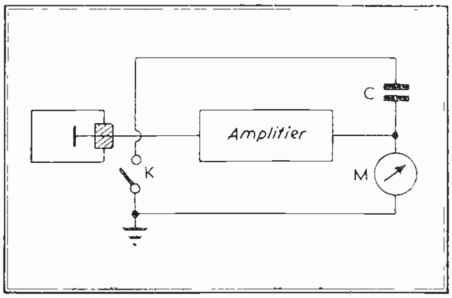

Fig. 12. Automatic balance circuit for measurement of ionisation currents (diagrammatic)

The comparator instrument due to Kemp[5] for comparison of ionisation currents has already been described. Its application in measurement of dose rates from radium plaques is obvious. Another method of measurement of small currents is the Townsend balance method. In this technique the charge brought to an electrometer by the ionisation current is balanced by a charge of opposite sign induced by slowly varying the potential applied to one plate of a capacitor, the other plate of which is connected to the electrometer. Then if in a time t the ionisation current i builds up a voltage V on the capacitor C,

$$i = \frac{CV}{t}$$

As an indicator of balance an electrometer valve may be used. A most suitable valve for this purpose is a space charge tetrode, *e.g.*, the FP54[8] made by General Electric of U.S.A. The four electrode valve has the advantage, as Du Bridge and Brown[9] have shown, that one valve may be used in a bridge circuit such that fluctuations due to any small changes which may occur in the supply batteries are automatically balanced out. If the potentials of filament, space charge grid, anode and control grid are all supplied by a common potentiometer and battery arrangement as shown in Fig. 11, the fluctuations in battery voltage will affect all the potentials simultaneously and by proportional amounts. Since changes in the space charge grid affect the emission current in the opposite sense to the others, the changes may be made self-compensating by a suitable choice of potentiometer tapping points. The valve and insulated system are enclosed in a dry evacuated box to avoid ionisation losses and to serve as an earthed screen.

When small currents are being measured the operation of adjusting the potentiometer to keep the electrometer deflection zero may become tedious. Clockwork may be used to drive the potentiometer at a suitable rate, or, better still, a photocell and associated apparatus may be employed.[10, 11] In an instrument devised by Lea[12] the automatic balancing is obtained in the manner represented diagrammatically in Fig. 12. The ionisation current is made to charge up the grid of the electrometer valve which is the first stage of a thermionic amplifier. As a result, the output of the amplifier which leads to one plate of the capacitor C, suffers a change of potential of the opposite sign and of about 10,000 times greater magnitude, the actual change of potential being directly read on the voltmeter

M. It may be shown that

$$it = CV\left(1 + \frac{C + C_0}{\mu C}\right)$$

where i = ionisation current, t = time, C = capacitance, C_0 = capacitance of the insulated system (collecting electrode of ionisation chamber, the grid of the electrometer valve, one side of C, one side of key K, and the connexions between them), μ = amplification of amplifier. As μ is large, it is very nearly equal to CV. The voltmeter can thus be made direct reading in units of charge, and the accuracy of calibration does not rely on the constancy of the capacity C and the accuracy of the meter M.

The amplifier consists of three resistance-coupled valves (including the electrometer valve). During the cycle of operation of the instrument the anode potential of the third valve changes by about 120 volts, this range of output voltage being produced by an input potential of about 10 millivolts.

The H.T. voltages must remain accurately constant and be independent of the load and are supplied by a glow-gap potential divider fed from a rectifier.

Radiation from other Radioactive Elements

Much investigative work in biological sciences has been devoted to the study of metabolism of organisms ranging from bacteria to man. Until the discovery of artificial radioactivity, the only method of studying mechanisms whereby the various elements and compounds essential for life are assimilated, distributed throughout the tissues, converted into other compounds and finally eliminated, was by a direct chemical approach. This mode of attack suffers from the limitation that owing to the lack of sensitivity of the method it is necessary to administer quantities of the elements which may be large enough to disturb seriously the normal chemical and physiological processes of the organisms. A reduction in these quantities of the order of a million times can be accomplished using radioactive isotopes, due to the facility with which they may be detected. Obviously this tracer research is also a necessary prelude to the therapeutic application of radio-elements.

Nearly all the isotopes used in experiments emit beta-rays, and some gamma-rays. The detection problem is thus to detect these radiations. The types of apparatus described for radium gamma-ray measurements may be utilised, providing suitable chambers are made. For beta-rays which have energies between 0.01 Mev and 4-5 MeV, a thin window must be provided in the chamber as these radiations are easily absorbed. In most radioactive elements, however, the radiation is of exceedingly low intensity and other apparatus must be devised. A more sensitive arrangement whereby individual electrons may be detected makes use of a Geiger counter. Two types of counter are in common use. One type is the so-called "non-self-quenching" counter in which the filling gas is of a simple type such as argon, hydrogen or air. When a positive ion (formed by collision with an energetic particle from the source) of one of these simple gases drifts to the cathode, a secondary electron may be released from the wall. This electron will in general re-ignite the discharge. For this reason a quenching circuit external to the counter must be provided to keep the voltage below the threshold value until after all the positive ions formed in the discharge have been collected. The other type of counter is the so-called "self-quenching" counter, in which the filling gas is a mixture of some simple gas such as argon mixed with an organic vapour such as alcohol vapour. When the positive ion of a large polyatomic molecule comes up to a cathode wall the molecule will in general dissociate rather than release a secondary electron from the metal surface. Thus by having an organic vapour with the filling gas secondary electron emission by positive ion impact may be essentially eliminated, and with it the necessity of a quenching circuit.

It is not proposed to go into details of the various auxiliary circuits which have been devised for use with Geiger counters. The basic functions of all circuits are as follows: the discharge initiated by a single electron is amplified by a multi-stage valve amplifier, the first stage of which amplifies the pulse from the counter and may assist in the quenching of the discharge, depending on what type of counter is used. This is usually followed by a second stage where small counters are concerned. Next a pulse equaliser and sharpener is used so that all pulses have the same magnitude, duration and waveform. The equalised pulses are fed into an output circuit which varies according to the counting rate. For low counting rates (10-100 per minute), an electromechanical register and stop-watch are adequate. For counting rates of 100 to several thousand a valve scaling circuit is often employed between amplifier and message register to reduce the number of pulses to a value which a mechanical register can record without error. A more convenient output circuit is a counting rate meter which is in effect a valve voltmeter which measures the voltage rise on a condenser in a R-C circuit to which the pulses are applied.

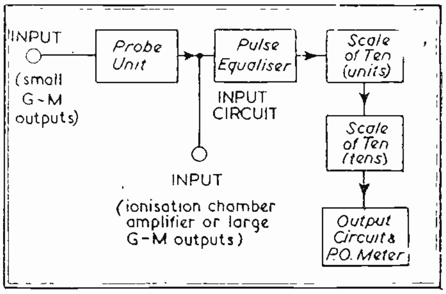

Fig. 13. Schematic diagram of pulse counting unit

A decade scaling unit available commercially in England is described by Rotblat.[13] The unit consists of two electronic scales of ten with either neon lamp or meter indication, followed by a mechanical counter. A schematic diagram is shown in Fig. 13. The input circuit consists of two pentodes and can function as a D.C. coupled snap circuit for ionisation chamber inputs, or as an A.C. coupled "flip-flop" circuit for G.M. counter inputs. The probe unit consists of a single valve amplifier with variable anode load for adjustment of gain. The scale-of-ten unit is made up of three standard scale-of-two units and a fourth modified scale-of-two which acts as a trigger circuit. Coupling between the first and second is via the fourth unit. The action of the first eight pulses is the same as in a normal scale-of-eight unit, *i.e.*, each pulse triggers the corresponding unit turning it over from one state of stable equilibrium into the other. With the eighth pulse the trigger unit is turned over into its second stable position. It is subsequently returned to its first position by the action of the tenth pulse which arrives from the first scale-of-two. This triggering action sends a pulse out to the next unit. The output circuit consists of a double triode which is triggered by the negative pulse from the last scale-of-ten. This produces a pulse which operates the mechanical counter. The resolving time of the scaler can be made as low as 3 μsec. and the unit is capable of recording counting rates up to 1,000/second.

A scaling unit marketed by Cinema Television, Ltd., recommends itself because of its simplicity in use, the count being read directly on meter scales.

Conclusion

It should be clear from this survey that the practice of radiation dosimetry has derived much benefit from the application of electronic forms of instrumentation. Further improvements may arise from the reduction of background fluctuations of currents or "noise"[11-15] in the first stage of amplifiers used with ionisation chambers. The most important noise factor in amplifiers for use with fast ionisation chambers covering the band 0.5-5 Mc/s. is anode current shot noise. An increase of signal/noise ratio may be obtained by reducing the input capacity, a problem for the valve designer. In amplifiers covering the band 200 Kc/s.—2 Kc/s. for use with slow air-filled ionisation chambers, grid current shot noise predominates. A reduction in grid current will bring about reduced noise. It appears then that improvements in amplifier design are dependent upon further valve development.

In the case of steady ionisation current measurement the most accurate instruments are those which employ a null method such as the Townsend balance or Kemp comparator. This is in accordance with general physical practice. As far as deflection methods are concerned, an improvement in the stability of very high input resistances will enable greater reliance to be placed on instruments involving their use.

Acknowledgments

My thanks are due to Messrs. D. E. A. Jones and P. Tothill for their helpful criticism of this article.

Bibliography

"Medical Physics," Glasser.

"Radium Therapy—its Physical Aspects," C. W. Wilson.

"Electron and Nuclear Counters," Korff.

"Modern Physical Laboratory Practice," Strong.

References

[1] Farmer: *Proc. Phys. Soc.*, Vol. 54, p. 435, 1942.

[2] Warren: *G.E.C. Journ.*, Vol. 6, p. 118, 1935.

[3] Kaye and Bell: *Brit. Journ. Rad.*, Vol. 8, p. 467, 1935.

[4] Langmead: *Brit. Journ. Rad.*, Vol. 15, p. 27, 1942.

[5] Kemp: *Brit. Journ. Rad.*, Vol. 18, p. 107, 1945.

[6] Farmer: *Brit. Journ. Rad.*, Vol. 19, p. 27, 1946.

[7] Farmer: *Brit. Journ. Rad.*, Vol. 17, p. 159, 1944.

[8] Spencer and Schultz: *Rev. Sci. Inst.*, Vol. 14, p. 10, 1943.

[9] DuBridge and Brown: *Rev. Sci. Inst.*, Vol. 4, p. 532, 1933.

[10] Gray and Tarrant: *Proc. Roy. Soc.*, A, Vol. 143, p. 681, 1934.

[11] Jacobsen: *Zeit. f. Phys.*, Vol. 91, p. 167, 1934.

[12] Lea: *J. Sci. Instr.*, Vol. 14, p. 89, 1937.

[13] Rotblat: *J. Sci. Instr.*, Vol. 25, p. 33, 1948.

[14] Pearson: *Physics*, Vol. 5, p. 223, 1934.

[15] Johnson and Johnson: *Phys. Rev.*, Vol. 50, p. 171, 1936.

Public Address Systems

In public address systems certain difficulties are encountered when it is desired to broadcast over large areas. For example, in order to set up a sufficient sound intensity at all points the power radiated from a single speaker may be increased, but if this is done it is often found that the system becomes unstable on account of the increased feedback from the radiating device to the microphone. On the other hand, if as a measure to avoid such instability a number of low power loudspeakers are used scattered widely over the area in question, then intelligibility becomes reduced because of the multiple sources of sound and the corresponding widely differing phase delays at any given point of the various signals coming from them.

A scheme that is of some value in solving these problems proposes to employ loudspeakers arranged at different vantage points, but fed with signals that have been suitably delayed. For example, there may be a central radiator surrounded at a distance of, say, 50 ft. by a ring of other radiators and at a distance of 100 ft. by another ring. The central radiator is fed directly from the microphone amplifier, but the radiators of the first ring are fed with signals delayed by the normal time of travel of sound between the central source and the ring. The outer ring is likewise fed and the delays may be set up conveniently by means of a moving tape system on which there is recorded the output from the microphone amplifier. Reproducing heads located along the tape supply the delayed signals.

The system may be improved by filtering out from the signals conveyed to the remote speakers those frequency components lying below, say, 1,000 cycles per second. In this way interference from overlapping fields of audibility, which tends to occur most at low frequencies on account of the greater spread of waves of long wavelength, is avoided. It becomes necessary, of course, with this particular arrangement to radiate from the central speaker an increased amplitude of signals at low frequencies so as to compensate for the lack of radiation from the other speakers at these frequencies; but the attendant risk of instability is not so great as might be anticipated, since attenuation of low-frequency waves in the course of their propagation is relatively small and the increase of radiated amplitude that is called for is not accordingly so serious a matter.

Communication from E.M.I., Ltd.

Correction

In an article "A Note on Interstage Coupling for D.C. Amplifiers" published in the February issue, page 61, 0.5 should read 0.95 (5th line from end of article).

Powder Metallurgy

By G. FITZGERALD LEE, F.R.S.A.

METALLURGY, of which Powder Metallurgy is a sub-science, is the science dealing with the extraction of metals from their ores, their refining, and their properties according to the different conditions they may assume, including alloys.

Metallography deals with the study and description of the internal structure, disposition of the free elements and solid solutions and compounds in a metal or alloy. Metallurgy and metallography are thus two equally important parts of the science of metals in ordinary "massive" form (as opposed to powders).

Powder metallurgy and powder metallography are analogous to massive metallurgy and metallography, but dealing specifically with substances (including even non-metals apart from carbon) in the powder form.

During the eighteenth century small grains of the metallic element platinum were discovered in the alluvial deposits of rivers; it was not then realised that these deposits also contained palladium, iridium, rhodium, osmium, and ruthenium. These grains, although recognised as metallic, were found to be quite infusible in the furnaces of those days (the melting point of platinum being 1,755° C., much higher than iron), and so they remained just a curiosity. Towards the end of the century, however, W. H. Wollaston found that these platinum grains could be *pressed together* into blocks; the result was a rather unstable mass. Continuing his efforts, he found that if these masses were then heated in a coke furnace they could be *forged* into malleable metal. This discovery of the pressing into mass, then heating and forging of originally powdered substances was the birth of powder metallurgy and remains its basic principle to this very day.

Tungsten occurs naturally as tungstate of iron, or "wolfram"; it is extracted by preparing the oxide and reducing it with carbon or hydrogen. The result is a black powder, tungsten powder. Tungsten has a melting point of 3,270° C. (nearly twice that of platinum), so that its utilisation presented an even greater problem than that of platinum. However, thanks to Wollaston's pioneer work, tungsten was treated similarly to platinum and with equally successful results.

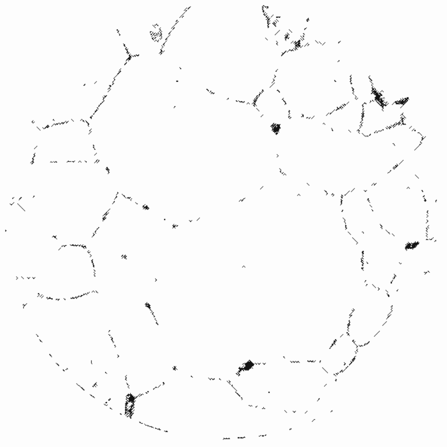

Fig. 1a. Sintered alnico (etched with nitric and acetic acid mixture)

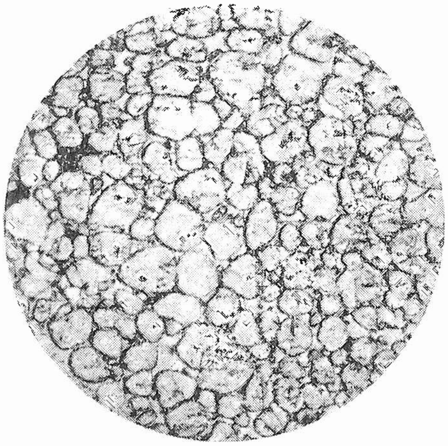

Fig. 1b. Sintered ferro-copper, 25 per cent copper (etched with 5 per cent nitric acid in alcohol)

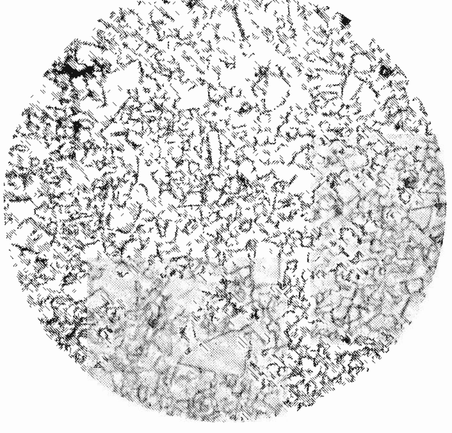

Fig. 1c. Hard Metal, 6 per cent cobalt (etched with alkaline potassium ferricyanide)

Thus, with platinum and tungsten, began the science of powder metallurgy, which laid more or less dormant until about 15 years ago, since when its importance and possibilities, with consequent development of technique, are being more and more realised every day. In 1930, excellent work was being done by the American metallurgist S. L. Hoyt in the structure, manufacture, and properties of tungsten-carbide-cobalt alloys. Four years later the German, Karl Becker, was manufacturing carbides and nitrides of tungsten, tantalum, molybdenum, vanadium, titanium, niobium and zirconium, salient work in the science. By 1936 investigations into powder metallurgy were in full swing. T. R. Bird, of London, was working on tungsten-carbide-cobalt cutting tools; F. Krupp, of Essen, was producing similar alloys, and so were L. L. Wyman and F. C. Kelley in the United States, to mention only a few.

Modern powder metallurgy deals essentially with the production of metallic masses by the "sintering" together of metallic powders, as opposed to fusion and electrolytic methods. Thus, the massive metals formed as a result of powder metallurgy do not possess the structure of ordinary metals or alloys, cast or wrought, and most of the laws applying to the production of such metals and alloys do not apply to the powder process or its products. Blocks of metal or finished articles can be produced by powder metallurgy which have specific properties not attainable by any other means. Some metals, such as platinum, but more so tantalum, molybdenum and tungsten, cannot ordinarily be melted, and the only means of rendering them workable is by powder metallurgy, which also likewise effects the successful admixture of metals difficult or impossible to alloy by any other means, such as copper and lead. Powder metallurgy also makes practicable the

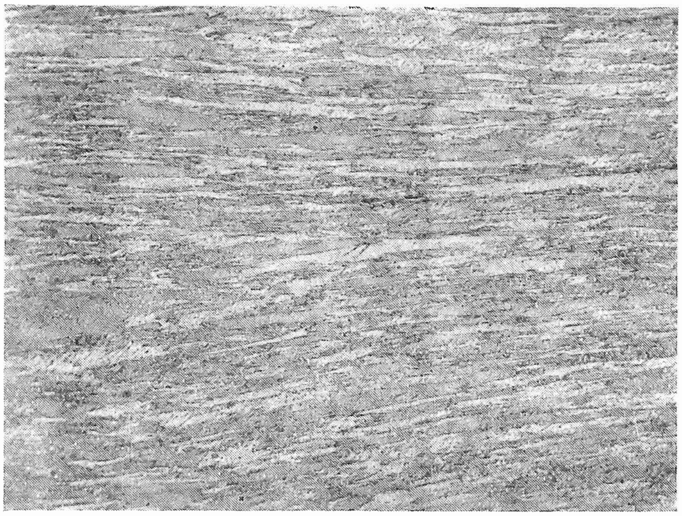

Fig. 2a. Longitudinal view of swaged tungsten rod (etched with alkaline potassium ferricyanide)

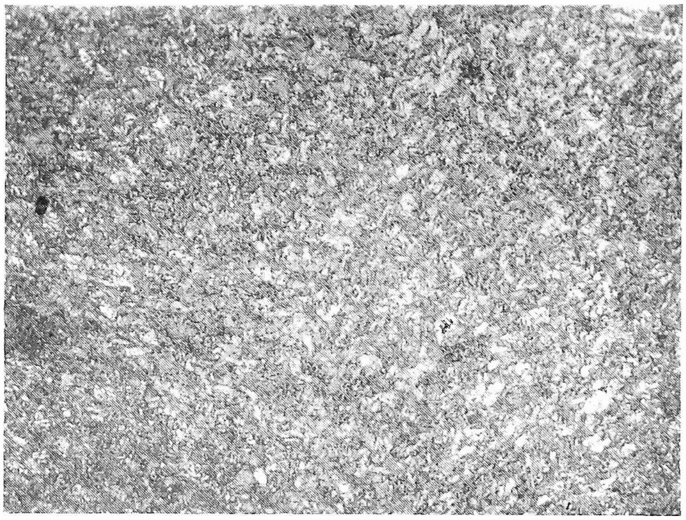

Fig. 2b. Cross-sectional view of swaged tungsten rod (etched with alkaline potassium ferricyanide)

inclusion into alloys of non-metallic elements, such as carbon in graphite or diamond-powder forms. The processes of powder metallurgy not only produce metallic aggregates not available by any other means, but also lend themselves to the production of unusual and intricate structures, all of which are *uniform* throughout. The production of intricate structures is due to the fact that moulding powders are now made by powder-metallurgical processes which can be used analogously to plastic moulding powders because the fluid characteristics and " curing " are analogous. The technique also makes possible the inclusion of tungsten, tantalum, or molybdenum carbides in tough metallic base " binders " for the production of moulding materials or alloys in mass. Power metallurgy is the only means of making tungsten or tantalum ductile enough for being drawn into wire, or malleable enough for being rolled into sheets.

Powder metallurgy being such a very recent development, various details of the technique are being improved steadily, although the fundamental principles remain fairly constant. The following details are therefore given only to convey a reasonably accurate idea of the process, as more detailed descriptions of the procedures may be obtained from the few textbooks on the subject. The first stage of the process is to reduce the substance, metallic or otherwise, to powder form. This may be done mechanically, by means of stamping, ball-mills, and so on, but mechanical means are limited by the physical natures of the material (*e.g.*, hardness), and also have several drawbacks to successful preparation for " sintering."

Very fine powders may be produced by " atomisation "; this is done by first superheating steam or compressed air to the melting point of the material to be atomised, then directing a jet of the steam or compressed air upwards through a nozzle partly submerged under the surface of a bath of the molten metal. The spray produced is gathered under suction, resulting in the cooled powder. The oxidation produced by this method, even with zinc, is less than 0.2 per cent. By its nature, however, it can only be used up to 700° C., *i.e.*, for tin, bismuth, lead, zinc, antimony, aluminium and magnesium. In manipulation, these very fine powders naturally possess many of the properties of *fluids*, especially when they are well aerated. Another means of producing powders is to emit, by gravitation, a stream of molten metal from an orifice, which is attacked at right angles to its fall by a pressure jet of steam or air atomising into droplets the metal, which falls to the container as cooled powder. Metals such as brass, aluminium, zinc and cadmium can be powdered by first melting them and then stirring them during the brittle stage during cooling just before true solidification sets in.

Tungsten and molybdenum powders are mainly produced by the chemical reduction of their oxides at temperatures somewhat below their melting points. The oxide of the metal is treated in a reducing atmosphere at an elevated temperature (the lower the temperature the finer the powder). The particle size, size distribution, and particle shape can be varied by the requisite control of the temperature and time of reduction, and the composition (and sometimes moisture content) of the reducing gas.

The " reduction method " is perhaps the commonest way of obtaining metal powders today.

The powder having been produced, it has next to be " sintered " (which is what Wollaston did when he heated and compressed platinum).

The surfaces of perfectly clean powdered particles have a cohesive attraction towards one another which is still in the nature of being a vital phenomenon, although a fact. This peculiar cohesive attraction causes the particles actually to *adhere* to one another, which occurrence is known as "sintering." For successful sintering it is essential that the powdered particles be quite clean throughout the process, thus it has to be carried out in a reducing atmosphere to prevent oxidation; this usually entails the introduction of reducing gases to permeate the porous mass in the container during the process. In the manufacture of tantalum aggregates from powder, the powder compact is usually heated electrically in a vacuum. Sintering is assisted by heat, which renders the powder more plastic and adhesive, and pressure which promotes the cohesion

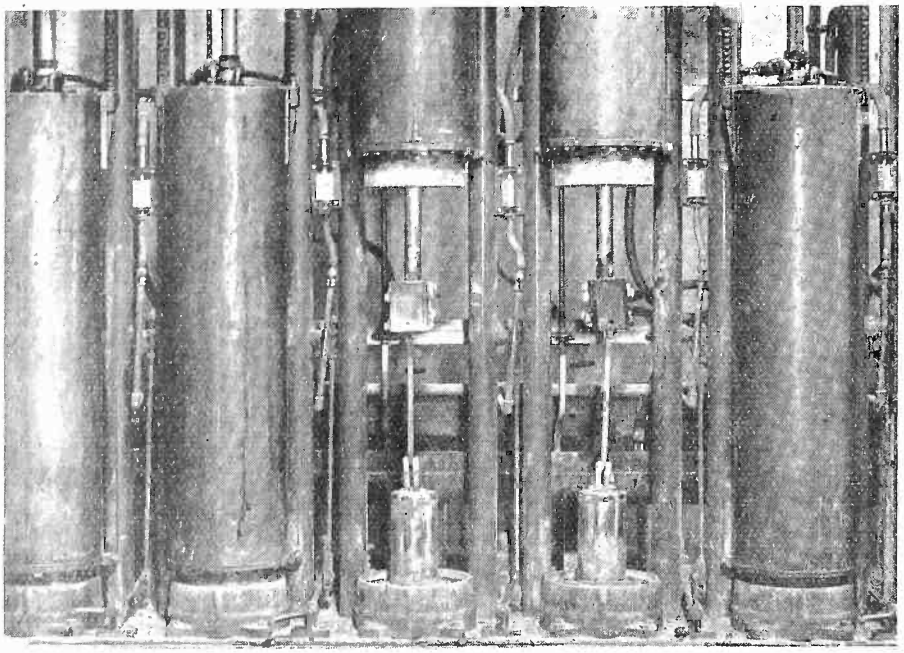

Fig. 3 (*above*). **Fragile tungsten bars sintered by passing 2,800A through them. Two jars raised to show connexions**

once the particles have adhered. Sintering is to powdered substances what welding is to metals in mass; there is no need for actual fusion in either case. G. Bielby found, in 1921, that fine particles of metals would adhere to other metals, glass, or porcelain, obtaining up to more than 20 tons p.s.i. adhesive force; the exact nature of the forces in his experiments is doubtful: a small percentage was obviously actual sintering, a large percentage the effect of surface films, and a certain amount due to atmospheric pressure. The sintering of freshly-drawn and thus perfectly clean threads of glass is now well known. Thin leaves of pure gold when pressed lightly together (oxidation being absent) sinter so well that they cannot be separated without one of the leaves tearing. Under the heat and pressure of sintering, the spaces between the particles of the compacted mass disappear, with a resultant shrinkage of the mass itself. The grain-development of the structure is very limited and grain-growth, which may occur in molten massive metals, is practically impossible. The final grain-structure is governed by the size of the original particles of the metal used. The extent to which diffusion occurs depending on the pressure, temperature and time of sintering; diffusion is usually very small and limited to the surface of the particle.

Four important points in the obtaining of successful sintering are: that there should be complete contact between adhesive surfaces of the particles, this is promoted by pressure, and the higher the pressure the stronger the compact; that this contact should not be rendered ineffective for sintering due to the presence of chemical surface films; that the atmosphere is definitely a reducing one; and that the particles are insufficiently plastic for sintering, usually ensured by the application of heat.

Dr. W. D. Jones, in his excellent book on *Powder Metallurgy* (Edwin Arnold & Co., 1943) describes some simple and interesting experiments in sintering thus:

"It is possible in a very simple manner to illustrate most of the conditions governing cohesion between metal surfaces. Small blocks of various metals (lead, tin, zinc, cadmium, copper, gold, for example) are cut by shears in such a manner that a plane highly polished cut face is obtained. It can then be demonstrated that:

1. These metals pressed against themselves or each other under low pressure adhere strongly.

2. The effect is more marked the higher the temperature and the greater the plasticity of the metal.

3. Although most of these metals readily develop oxide films, this does not prevent cohesion by simple pressure alone, even several hours after shearing.

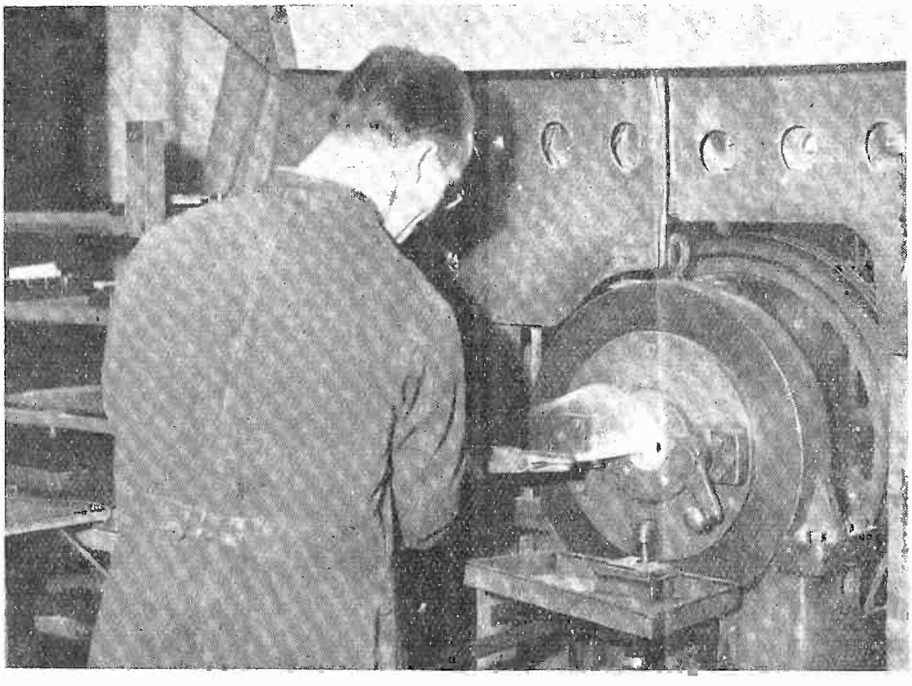

Fig. 3 (*below*). **Tungsten bar is made round and more ductile in the swaging machine**

4. A slight film of grease such as would be obtained by passing a finger very lightly once over the cut surface entirely prevents cohesion and allows the two blocks to slide over each other with very little friction.

5. Once an oxide film has attained sufficient thickness to prevent cohesion by simple pressure, then rubbing together of the two metals will, by abrading and dislodging the film, make adhesion possible."

The melting point of tungsten is about 3,300° C., and the temperatures at which tungsten lamp filaments are required to operate is about 3,000° C. It is at this proximity to the melting point of the metal that it must maintain stiffness, toughness, and conductivity. Cold-drawn tungsten wire becomes brittle at 2,000° C.; there are, however, three types of tungsten wire which are permanently tough, the third type being especially good for retaining its desirable characteristics at even 3,000° C. The first type is that in which grain growth has been inhibited during manufacture; in the second type the grain growth is promoted to obtain long crystals with their axes parallel to the axis of the wire; and in the third type the grain growth is encouraged until the whole filament is one single crystal. The crystal size is controlled by the use of " additives " during manufacture, usually oxides or salts, which, with suitable heat-treatment help to produce any particular type of crystal structure. The inhibition or reduction of grain growth is effected by the dispersion, throughout the metallic compact of insoluble inclusions, such as the oxides of thorium (mainly), uranium or calcium, which cause mechanical obstructions. In coiled coil filaments the great stability required in the wire, and the prevention of short circuiting between consecutive turns of the helix necessitates the occupying of the whole cross-section of wire by large single crystals; most modern filaments consist of single crystals inches in length.

One means of producing a single-crystal filament is to reduce the tungsten powder from tungsten oxide containing 2 per cent thoria in hydrogen. This powder is ground mechanically, mixed with an organic binder, and extruded through diamond dies. The thread is drawn through a hot zone *very* slowly in an atmosphere of hydrogen at a temperature of about 2,100° C. Another method is to anneal drawn wire at about 1,600° C. for one second, draw it through a 6 per cent reduction die, and then put it through the hot zone.

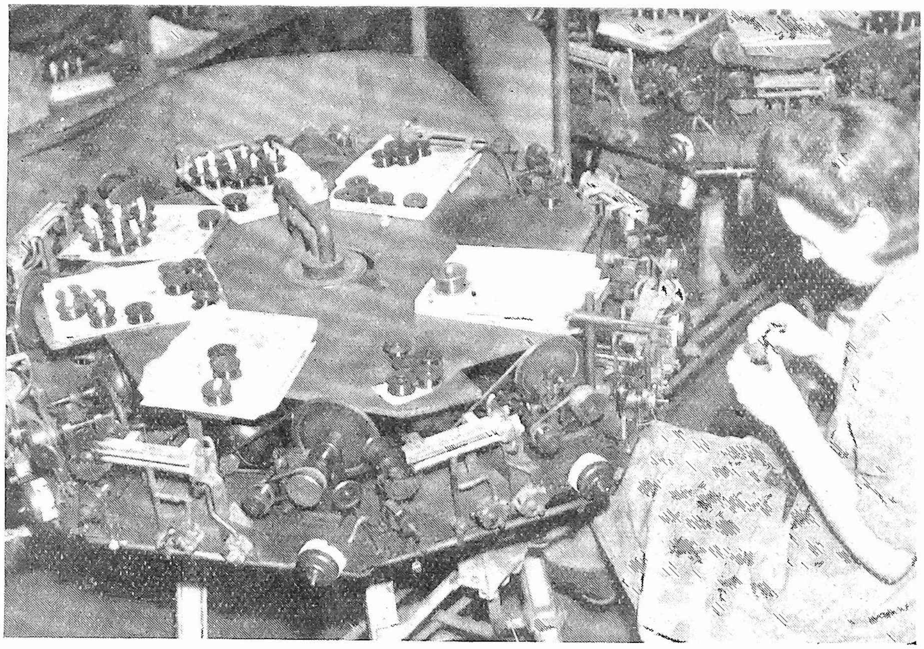

Fig. 4. Drawing to the finest sizes is done on tiny machines mounted on round rotating tables

Photos in Figs. 3 and 4 by courtesy of the " Electrical Review "

The process of moulding powdered metals, is, in principle similar to plastics moulding, to run the powder into the die and compress it (pressures at present used being up to about 40 tons p.s.i.). On removal from the die the compact is rather fragile and is therefore then heated in a furnace up to about two-thirds the melting temperature of the compact, thus completing the sintering. Alternatively the compact may be heated in the die under pressure; this allows lower pressures to be used, but naturally shortens the life of the die. Powder metallurgy is used in the manufacture of bi-metallic electrical contacts; in this case the powdered copper is placed in the mould, then the layer of silver and graphite, the whole being sintered together under heat and pressure in the mould.

As can now be realised, the *structure* of powder metallurgy products is very much more under control than that of casting alloys. A fine-grained structure can be caused to be present throughout the compact, thus the undesirable characteristics of " as cast " products are obviated.

Apart from applications mentioned products made by the powder metallurgy process used by the electrical industry include welding electrodes of high conductivity copper or tungsten; make-and-break contacts of nickel, molybdenum, tungsten or silver and graphite; commutator segments, sparking plugs, armatures and dynamo and motor brushes. The General Electric Company's Research Laboratories at Wembley have produced a " Heavy Alloy " (trade name) of 90 per cent tungsten with nickel and copper; G. E. C. Heavy Alloy is as strong as steel, yet twice as heavy and can be readily machined.

Another interesting application of powder metallurgy is in the production of " self-oiling bronzes " for bearings, made by sintering copper and tin powders with or without the addition of graphite, the resultant compacts being porous and thus impregnable with fluids. Powder metallurgy products are being widely developed by the American automobile industry, and other applications include tipped cutting tools, high-tensile bronze wires, jewellery, plate, carpenters' fittings, and even ink blotters.

Improved Accuracy with a "Q"-Meter by the Use of Auxiliary Components

By A. C. LYNCH, M.A.*

A "Q"-METER consists of an oscillator with output control, a resonant circuit with provision for connecting specimen inductors or capacitors, and a voltmeter calibrated in terms of "Q." The general circuit is shown below the dotted line in Fig. 1. It constitutes a convenient piece of apparatus for the rapid measurement of inductance or capacitance, and of the associated resistive losses.

It is a matter of common experience that its accuracy, in measurements of losses, is not better than about 20 per cent. This accuracy can be somewhat improved by using the reactance-variation method of measurement—*i.e.*, measuring the breadth of the resonance curve—but it is still only of the order of 5 to 10 per cent, especially when the "Q" is low. The causes of these errors include:

(a) inaccurate calibration of tuning capacitors (either errors in calibration, or insufficient scale-reading accuracy);

(b) inaccurate calibration of voltmeter—*i.e.*, of "Q" scale;

(c) coarseness of scale of voltmeter at low voltages.

It has also been suggested[1] that an external galvanometer, with arrangements for backing off most of the current, should be used, in place of the built-in meter, in the voltmeter part of the "Q"-meter. This is satisfactory for measurements on specimens of low loss.

The following method is useful whether the specimen has high or low loss. It uses the "Q"-meter with an external galvanometer in such a way that the errors (b) and (c) are eliminated. The error (a) can be avoided by the use of one or, if necessary, two external capacitors. The only component in the "Q"-meter which is required to show any property other than stability is the thermocouple, which is assumed to maintain a voltage accurately proportional to the square of the current in its heater.

The Modified Circuit

The principle used is that of the reactance-variation method.[2] For that method it is usual to maintain a constant input voltage and observe the resulting voltage as the circuit is detuned—*i.e.*, to obtain the resonance curve. The present proposal is to increase the input voltage in known ratios, and to find how much the circuit must be detuned to maintain a constant voltage in it.

The input voltage is measured by a thermocouple and galvanometer; to obtain the necessary reading accuracy, a reflecting galvanometer is used, external to the "Q"-meter, and connected in parallel with the "Q-range" meter. The known ratios of input voltage are measured by shunting this galvanometer and maintaining its deflexion constant. The load on the thermocouple can be kept constant.

A reflecting galvanometer is also required for the measurement of the response in the resonant circuit, as the built-in meter, while just adequate when near full-scale, cannot be read with sufficient accuracy at low readings. The additional meter (suitably shunted) can be connected in series with the internal meter.

Fig. 1 shows this arrangement. It involves no modification to the "Q"-meter other than the fitting of four terminals, two of which require to be short-circuited for use of the "Q"-meter in the normal manner.

Calculation of Resistance or Conductance

The total conductance of the resonant circuit is given by

$$G = \frac{\omega \Delta C}{2\sqrt{k^2-1}}$$

(the meaning of the symbols can be inferred from Fig. 2).

It is convenient to write

$$S = \frac{\Delta C}{2\sqrt{k^2-1}} \quad ;$$

so that for the ratios given by the apparatus described below,

$$S = \frac{\Delta C}{2} \text{ and } \frac{\Delta C}{3} \quad ,$$

respectively, for the two ratios provided.

If measurements of S are made with and without a specimen connected, and the difference in this quantity is written as S_x, then for

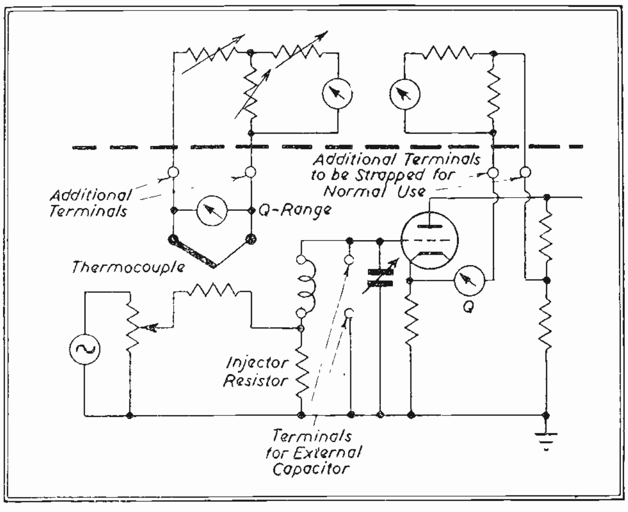

Fig. 1. (*Left*). General arrangement of "Q" meter with external galvanometer

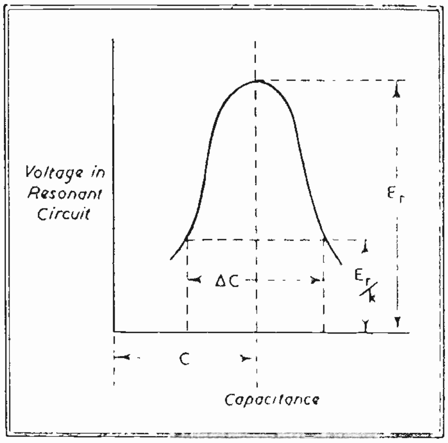

Fig. 2 (*Right*). Typical resonance curve to illustrate meaning of symbols (see text)

---

* Post Office Research Station, London, N.W.2.

a capacitive specimen, of capacitance C_s,

$$\text{power factor} = \frac{S_s}{C_s};$$

and for an inductive specimen, of inductance L_s, resonating with capacitance C_s,

$$Q = \frac{S_s}{C_s}$$

and series resistance of the specimen

$$= \omega^3 L_s^2 S_s$$

$$= \frac{S_s}{\omega C_s^2}$$

The specimen may be connected across either the coil or the capacitor of the "Q"-meter, and the breadth of tuning will be the same in each case, provided that the resistance of the "injector" resistor can be ignored. But since "Q" is given by $\frac{1}{\omega LG}$, where G is the total circuit conductance and L the inductance between the "coil" terminals of the "Q"-meter, the potential at the voltmeter is greater when L is small. As the measurement is easier when the potential is larger, inductive specimens should be connected in parallel with the original coil rather than with the condenser; capacitative specimens should be connected in parallel with the capacitor.

An Equipment on this Principle

A set of equipment has been constructed around a Boonton 160-A "Q"-meter. The thermocouple galvanometer must give full-scale deflexion for about 2 mV input; a Cambridge reflecting galvanometer of 560 ohms resistance has been used. (This is an unnecessarily high resistance; about 50 ohms would probably have been more suitable). This galvanometer requires about 5,000 ohms external resistance for critical damping. The switching of the circuit is arranged to give ratios of input voltage of $1:\sqrt{2}:\sqrt{3.25}$; it maintains both a constant load on the thermocouple and nearly critical damping of the galvanometer. Details are shown in Fig. 3.

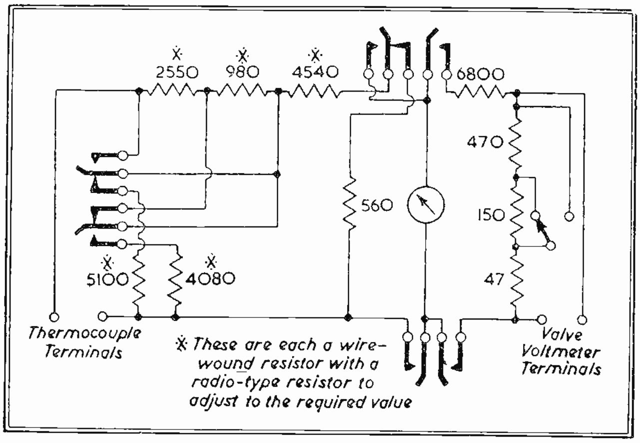

※ These are each a wire-wound resistor with a radio-type resistor to adjust to the required value

Fig. 3. Single galvanometer circuit with detailed resistance values

The same galvanometer can be used for the resonant-voltage readings, by additional switching as shown. The shunts are arranged so that, in the least sensitive position, full-scale deflection corresponds to a "Q" of about 200.

The control of oscillator output in this "Q"-meter is carried out by variation of the H.T. voltage. The frequency varies when this control is operated and the result is that the resonance curve is slightly unsymmetrical. The breadth of the curve is, however, unaffected.

As the fine tuning capacitor of the "Q"-meter has an inaccurate calibration, and is not always of sufficient range, while the main tuning capacitor cannot be read to better than 1 μμF in some parts of its scale, an external capacitor is needed. A Muirhead Type 11-D capacitor of 70 μμF range and 0.008 μμF per scale division is used; it is not ideal—in some respects it is of unnecessarily good quality, and on the other hand, its minimum capacitance of about 30 μμF is objectionably large—but it is probably the most suitable component commercially available.

The stability of this "Q"-meter, though adequate for normal use, is not sufficient for the present purpose unless its power supply is obtained through a constant-voltage transformer.

After a little practice, it is possible to make a set of measurements, on one resonance curve, in 1½ to 2 minutes.

Tests of Accuracy of Measurement

Three groups of tests have been made:

1. Measurements on resistors; these tests verify that the principle is sound and that the resonance curve is being correctly measured.
2. Measurements, at the lowest convenient frequency, on a capacitor of very low power factor; these measure the conductance of the tuning capacitor in the "Q"-meter.
3. Measurements, at a high frequency, on capacitors separately and together; these measure the series resistance of the tuning capacitor in the "Q"-meter.

Tests with Resistors

The resistances of a number of surface-type carbon resistors were measured in a D.C. Wheatstone bridge and also at 1 Mc/s. and 10 Mc/s. in the apparatus described. Discrepancies in the 10 Mc/s. measurements were found to be due to the inductance of the external capacitor and the leads to it. The apparent capacitance is:—

$$C_1(1 + \omega^2 L_1 C_1),$$

where C_1 is the low-frequency capacitance, and L the inductance, of the capacitor and its leads; since C_1 is itself variable, the

Table I

	Resistance at D.C.	Resistance at 1 Mc/s.	Resistance at 10 Mc/s.			
			C_1 = 50 μμF	C_1 = 82 μμF	C_1 = 114 μμF	C_1 = 82μμF, without correction for inductance
Megohms	2.72	2.9_0				
	1.562	1.57				
Thousands of ohms	570	56_0				
	268	28_3		27_0		31_2
	119.4	124	122	122	$108._3$	141
	67.7	$67._8$		$65._3$		$75._5$
	33 0	$33._0$	$33._8$	$33._3$	$33._6$	$38._5$
	17.76	$16._6$		17.1		$19._8$
	10.01		10.0_9	10.1_0	10.0_5	11.7
	5.89			5.7_4		6.6_1
	2.72			2.6_3		3.0_1

correcting factor for S is:—

$$(1 + 2\omega^2 L_1 C_1).$$

The inductance L_1 was deduced from measurements of capacitance at 200 Kc/s. and at 10 Mc/s., and was found to be 0.24 μH. Some of the measurements were then repeated with different settings of the external capacitor, and consistent results were obtained as shown in Table 1.

The correction for inductance is thus very important at 10 Mc/s. At 20 Mc/s., with $C_1 = 50$ μμF, it amounts to 40 per cent, and therefore sets the upper limit of frequency usable. At 2 Mc/s. it is 1 per cent, and above this frequency the correction should normally be applied.

Tests with a Capacitor of Low Power-Factor

A capacitor was formed of two stainless-steel plates, 4 in. square, separated by three freshly-cut fragments of Distrene, of about 1 mm. thickness.

Several measurements were made, all at 150 Kc/s., with each of two tuning coils. The results were:

Capacitance of "Q"-meter tuning capacitor		Decrease of S on connecting " specimen " scale divisions$_0$
without "specimen " μμF	with " specimen " μμF	(1 div.=0.008μμF)
392	305	1.$_0$, 0.$_5$, 0.$_5$, 0, 1.$_0$
162	75	−0.$_5$, 0.$_5$, 0.$_5$, 1.$_6$

Hence the change of conductance of the capacitor is of the order of 0.004 micromho for 87 μμF, and its power factor about 0.00004.

Tests with Capacitors Separately and Together

Two silvered-mica capacitors, A and B, were measured separately and also in parallel at 10 Mc/s. When in parallel they had separate leads to the " Q "-meter terminals.

The results were:

	Capacitance of Q-meter tuning capacitor		Increase of S on connecting " B " (two determinations)	
	without " B " connected μμF	with " B " connected μμF	μμF	
" A " not connected	379	302	0.05,,	0.11
" A " connected	148	71	0.06$_5$,	0.06

If there were resistance in series with the tuning capacitor, the conductance of the capacitor would vary with setting, the variation being more rapid at the higher capacitances. The conductance of a specimen would therefore appear to be less when the capacitor was set at a high value. The observed results show that no change in of this type exceeds the error in measurement, which is about 0.02 μμF; the series resistance of the condenser is therefore less than 0.01 ohm.

Table 2

Type of impedor	Frequency	Quantity measured	Accuracy
Resistor (10 megohm ...	100 Kc/s.)	Resistance	2%
(1 megohm ...	1 Mc/s.)		
(100,000 ohm ...	10 Mc/s.)		
Capacitor, 100 μμF	any	Power factor	0.00003, or 1%, whichever is larger
Inductor, 40μH	1 Mc/s.	Series resistance	0.001 ohm, or 1%, whichever is larger

Summary of Possibilities

A " Q "-meter used as described, with an external galvanometer and variable capacitor, can be used to measure resistive components of impedances (whether the impedance is mainly resistive, inductive, or capacitive) in the frequency range 100 Kc/s. to 20 Mc/s. The accuracy of the measurement of S, a quantity defining the breadth of the resonance curve, is limited to about ±0.0003 μμF by instability of oscillator frequency and of the capacitance of various components, and to about ±1 per cent by instability of the voltmeter and the scale-reading accuracy of the galvanometer. This quantity S is equal to G/ω, where G is the conductance of the circuit. This accuracy corresponds, for example, to each of the following: The full accuracy thus calculated cannot always be obtained in measurements on capacitors and inductors, as there will be errors caused by losses in auxiliary apparatus—*e.g.*, in the external capacitor which would be needed to resonate with the inductor in the last example given. The method is therefore as good as, but no better than, any which involves components of normal laboratory types.

The next step in improving the accuracy and convenience of working, using this principle of reactance-variation with constant response, would be to obtain the various input voltages from a capacitive potentiometer of known ratios; this would eliminate the need for the thermocouple. Experience with the equipment described has shown that in any such further development, the greatest care must be taken to minimise stray inductance.

Acknowledgments

The experimental work described was carried out at the Post Office Engineering Research Station by the author and Miss S. Rodwell, and is published by permission of the Engineer-in-Chief of the Post Office.

References

[1] P. H. Mead, in a Report by R.A.E., Farnborough, not generally available.

[2] See, for example, Hartshorn and Ward, *J.I.E.E.*, 79, p. 597 (1936).

The New Secretary of : The Department of Scientific and Industrial Research

Sir Edward Appleton, K.B.E., K.C.B., will relinquish on April 30, 1949, his appointment as secretary to the Committee of the Privy Council for Scientific and Industrial Research.

The King has been graciously pleased to approve the appointment of Sir Ben Lockspeiser, M.A., M.I.Mech.E., F.R.A.S., to succeed Sir Edward Appleton.

Sir Ben Lockspeiser is at present chief scientist at the Ministry of Supply and will take up his new appointment on May 1, 1949.

He is a member of the Scientific Civil Service and has risen from the lowest grade.

Previous holders of the appointment are:—

1916-1927	Sir Frank Heath, G.B.E., K.C.B.
1927-1929	Sir Henry Tizard, G.C.B., A.F.C., F.R.S.
1929-1939	Sir Frank Smith, G.C.B., G.B.E., F.R.S.
1939-1949	Sir Edward Appleton, G.B.E., K.C.B., F.R.S.

Sir Ben Lockspeiser will be 58 this year. He was a scholar at the Sidney Sussex College, Cambridge, where he took Natural and Mechanical Sciences with honours.

The Electronic Measurement and Control of Heat

Part 3—Electronics and Welding

By JOHN H. JUPE, A.M.I.E.E.

THE application of electronics to welding is an ideal union because of the diverse nature of welding methods, many circuits have been devised and it is impossible to do more than to indicate some fundamental principles in a single article.

Consider first a few of the major points involved.

1. The current in welding is seldom less than 1,000 amperes and may be as high as several hundred thousand.
2. The time of the current flow is comparatively short, say, 1 to 25 cycles of the A.C. mains, but is very variable with different classes of work.
3. The power factor of the load may vary between 0.1 and 0.9 with an average of 0.5. Therefore the control gear must function satisfactorily within these limits.
4. Spot welding requires a single impulse, while seam welding requires a series of impulses with definite " off " times.

Two types of electronic tubes have been widely used in this field: Ignitrons, where high powers are concerned, and thyratrons for smaller equipments and for the control of ignitrons. Both types of tubes can be built to withstand heavy overloads for short periods, and since both function as half-wave rectifiers they are generally used in inverted fashion as in Fig. 1. This shows a simple circuit diagram for a pair of ignitrons without phase or timing control. The dry metal rectifiers prevent damage to the ignitrons by barring the passage of current from pool to ignitor. It will be seen that the current is started by closing the starting switch S_1, but in many cases, particularly on high voltage supplies, it is more satisfactory to use a pair of thyratrons as control valves, as shown in Fig. 2.

To add some form of phase control to circuits of the above type the simplest method is to insert a pair of inversely connected thyratrons in series with the starting switch as in Fig. 3. The master control is applied to the grids of the thyratrons to delay their firing on each half-cycle and as each in turn controls an ignitron the latter are also delayed. A simple phase-shift network is given and by suitably adjusting the resistance R_1 firing can be made to take place at any point on the A.C. voltage wave.

Another method of achieving this result is shown in Fig. 4. Here the thyratrons are given a separate bias voltage effected by a peak voltage superimposed on the steady bias voltage. This peak voltage is shifted by means of a phase-shifting network to vary the firing point. Control in both these phase-shift examples can be by means of a starting switch, or a bucking transformer can be used as in Fig. 4a.

When an A.C. voltage is used to hold the thyratrons non-conducting the grid resistor is shunted with a capacitor. This gives a D.C. component of negative grid voltage due to grid rectification and so avoids difficulties due to the thyratrons being fired by transients.

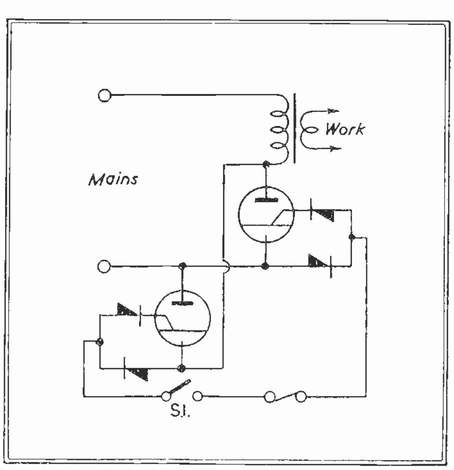

Fig. 1. Simple ignitron circuit without phase or timing control

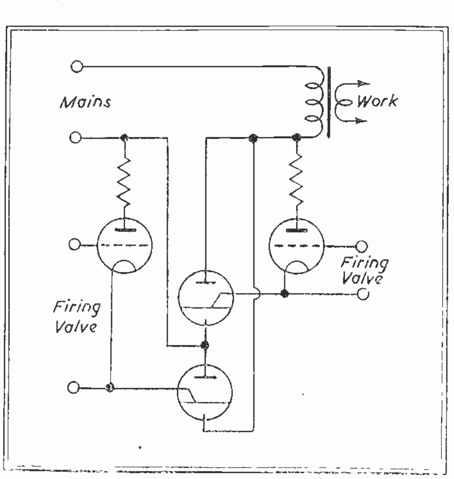

Fig. 2. Ignitron circuit using thyratrons as control valves

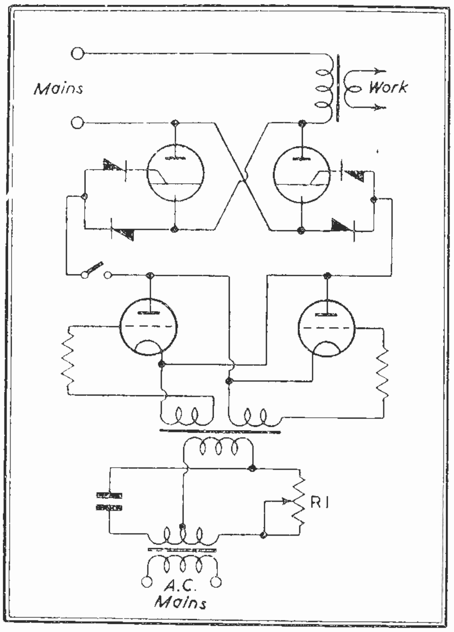

Fig. 3. Ignitron circuit with simple phase control

So far, only the control of the power has been dealt with and the matter of duration of current flow is dealt with separately.

Timing Control in Welding

Basically this analyses down to switching an A.C. voltage and at first consideration it might be assumed that a common control voltage, applied to both thyratrons, would be satisfactory. Actually, this would not be so due to the inverse connexions which automatically prevent both thyratron cathodes from being at the same potential. This difficulty is overcome by using a circuit incorporating what has been termed a " trailing " valve, shown in Fig. 5.

The control valves energise the transformer at each half-cycle and the grid circuit of B is made up of three parts as illustrated. The bias voltage is 180 degrees out of phase with the anode voltage and therefore keeps B non-conducting with the aid of grid resistor and condenser, so long as the feedback winding is energised. This condition will hold so long as A is held off by the timing voltage and consequently the secondary winding of the control transformer will have zero volts between its terminals.

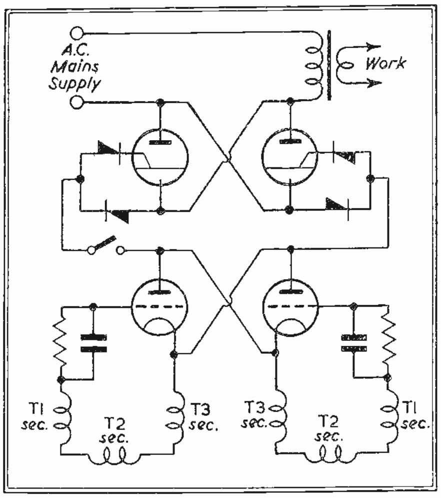

Fig. 4. Ignitron circuit with an alternative method of including phase control

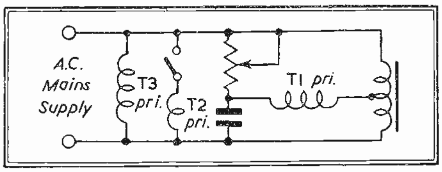

Fig. 4a. Bucking transformer circuit for use with Fig. 4

Fig. 5 (Below) Timing circuit for control of welding ignitrons

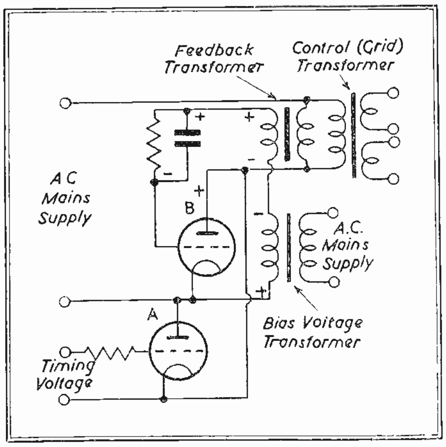

Fig. 6 (Right). Simple circuit for spot welding control

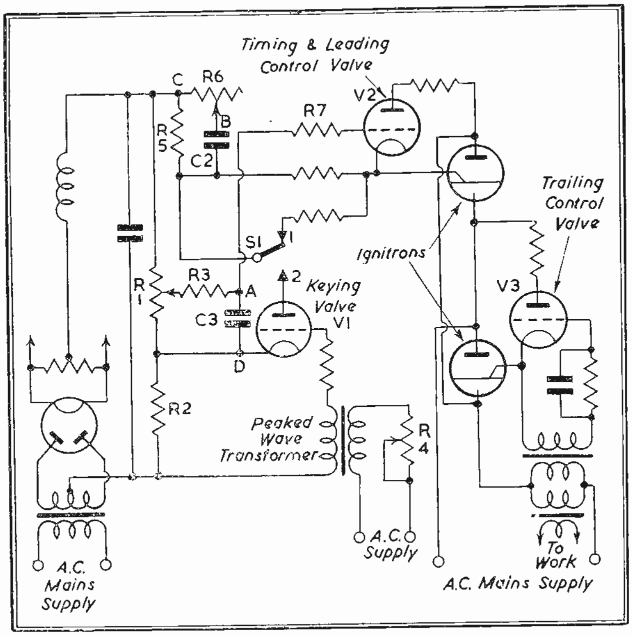

Fig. 7. (Right) Set-up for automatically hardening engine valve stem tips

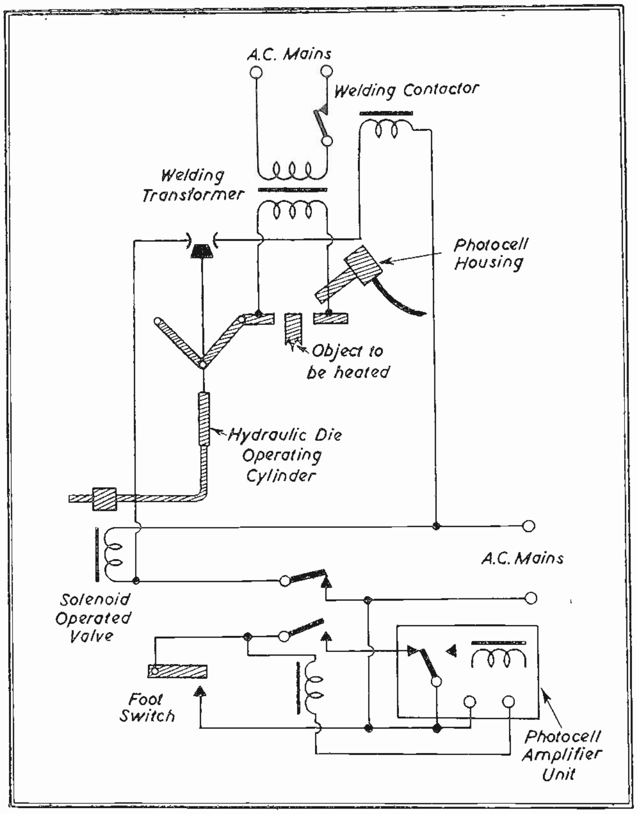

If the grid of valve A is positive when its anode is positive, current will flow for half a cycle. This supplies power to the feedback transformer and, due to the inductance of the primary of the control transformer, the current wave will lag behind the voltage wave. This means that when the current through the valve A falls to zero there will be a positive voltage on the anode of valve B and the feedback transformer will apply a positive voltage to the grid, which makes B conduct for half a cycle.

So long as the load is inductive, whenever valve A conducts, valve B will follow half a cycle later. If the current through A went to zero voltage there would not be any voltage to fire B. However, there is usually sufficient leakage reactance in the feedback transformer to cause the lag necessary to make B trail.

When valve A goes negative the feedback transformer will be de-energised as soon as B stops, and if A does not fire there will be nothing to fire B.

Such are the main points of operation of a trailing circuit and it possesses valuable features in

TABLE I

CLASSIFICATION OF METHODS OF MEASURING TEMPERATURE

I. Methods Utilising Discontinuous Reversible Effects

1. Freezing point.
2. Boiling point.

---

3. Molecular transformation point.
4. Solubility.
5. Colour.

A line must be drawn (both meanings) between equilibrium temperature effects which include the International Standards, and others.

II. Methods Employing Continuous Effects

1. Properties of bodies.
    - (a) Thermal expansion:
        - (1) of gases.
        - (2) of liquids.
        - (3) of solids.
    - (b) Electrical conductivity or resistivity:
        - (1) metals, or alloys.
        - (2) other solids.
        - (3) electrolytes.
        - (4) ionized gases, etc.
    - (c) Viscosity, fluidity.
    - (d) Refractivity.
    - (e) Vapour pressure.
    - (f) Magnetic susceptibility.
    - (g) Sound velocity.
    - (h) Permitivity.
    - (i) Elasticity.
    - (j) Rotatory polarization.
    - (k) Colour of transmitted light.
    - (l) Colour of reflected light.
    - (m) Hydrogen ion concentration.
    - (n) Specific heat.
    - (o) Compressibility, etc.
2. Effects between bodies.
    - (a) Simple differences of properties:
        - (1) Expansivities
            - (a) Bimetalic.
    - (b) Effects at interfaces or junctions.
        - (1) Solid versus solid.
        - (2) Solid versus liquid.
        - (3) Liquid versus liquid.
    - (c) Effects at a distance (radiometry):
        - (1) Methods utilising Stefan-Boltzmann law.
        - (2) Methods utilising displacement of maximum energy density.
        - (3) Methods utilising selected band or wavelength.
            - (a) Measurement of monochromatic energy by visual matching.
            - (b) Measurement by extinction methods.
            - (c) Combinations of (a) and (b).
            - (d) Selection by filtration.
            - (e) Selection by special curve of receiver.
        - (4) Methods of utilising ratio of energy at two effective wavelengths.
        - (5) Spectroscopic, spectrographic or spectrometric methods.

III. Methods Utilising Irreversible Effects

1. Fusion.
2. Colour change, etc.

IV. Combination Methods

1. Methods using a temperature coefficient of an entire assembly.
2. Calorimetric pyrometers, aspiration pyrometers, and other devices requiring transport or transfer or manipulation of the body or of a continuous sample.
3. Methods requiring the introduction of an indicator as in line reversal method.

connexion with electronic welding control.

1. It provides a means of controlling from a common source two valves whose cathodes are not at the same potential.

2. There is no possibility of getting an odd number of half-cycles. This ensures against D.C. components flowing through the welding transformer, with the attendant danger of saturation, an important matter with seam welding where ON/OFF times are of short duration and the secondary is continuously short-circuited.

The circuit arrangement is shown in more detail in Fig. 6, which illustrates a fairly simple circuit for spot welding control. The equipment consists essentially of a power supply unit to furnish D.C. for the timing and control circuit, a keying valve V_1 to ensure starting at the desired point on the voltage wave after closing the switch, a combined timing and leading valve V_2; also a trailing valve V_3, together with the ignitrons. Operation of the circuit is as follows:

The greater part of the D.C. voltage appears across the resistor R_1 and is used to charge the timing capacitor. A small voltage across the resistor R_2 is used for biasing the keying valve V_1. Connected across a part of R_1 is the filter combination of resistor R_3 and capacitor C_3, which renders the timing practically independent of mains voltage variations, since point A will be held reasonably constant by the charge of C_3. A slider on R_1 determines the actual potential of point A when C_3 becomes charged through R_3.

The keying valve V_1 has the voltage across the resistor applied to its grid as negative bias such as would normally hold V_1 in a non-conducting condition. Connected in series with this bias is the secondary of a peaked wave transformer which makes the grid positive so that the valve can conduct once per cycle and at a time dependent on the phase of the peak, this being determined by the adjustment of resistor R_4 in series with the primary.

In the normal position of the starting switch S_1 the anode circuit of valve V_1 is open, so that it cannot pass current through resistor R_6 at the next positive peak. When S_1 is closed current will flow and will continue to do so regardless of the voltage applied to the grid. The voltage across R_5 will be equal to that across R_1, minus the drop in V_1 and this voltage is applied to the combination of resistor R_6 and capacitor C_2 the time required to charge C_2 depending on the adjustment of R_6.

Also, the time required for point B to reach the potential of point A depends on the value of R_6 and timing can be varied between, say, ½ and 25 cycles, in fact, R_6 may consist of a number of fixed values arranged at one-cycle intervals. To add phase control to this synchronous timing control it would be necessary to connect valve A grid (Fig. 5) to the grid of V_2.

The sequence of operation would then be as follows: Assume that the starting switch is in position 1. Point B, which is the cathode of the leading control valve, is at the same potential as point C, because current is not flowing in R_5 and the C_2-R_6 combination is not energised. The grid of V_2 is connected to point A through the current limiting resistor R_7, which is negative with respect to point C. Therefore, V_2 is held non-conducting. When S_1 is thrown to the starting position 2, resistor R_5 has current passed through it and for the instant before C_2 starts to charge R_6 will have the full voltage of R_5 across it and point B will be at the same potential as point D, minus the drop in V_1. Under this condition the grid of V_1 is positive with respect to the cathode point B and the valve conducts. As the time required for point B to reach the same potential as point A depends on the value of R_6, this resistor controls the time duration.

Electronic Control and Mass Production

The benefits to be obtained by using this form of control in general industry are very considerable. A typical example is that of a machine for automatically hardening engine valve stem tips with a set-up illustrated in Fig. 7.

The stem is inserted between hydraulically operated clamps which automatically close on the stem. When full closure has taken place, the primary of a heavy current transformer is energised and in two seconds the stem tip is at a temperature of 980° C. At the desired temperature a photocell observes the colour of the metal and operates relays to disconnect the mains, open the clamps and so allow the valve to drop into a hardening tank. The number of stems treated runs to 1,800 per hour and with a very low percentage of rejects.

Other examples of advantageous electronic control are:

1. Resistance heaters for shrinking the metal shell on to the ceramic insulation of sparking plugs. Installation of photocell controls resulted in a tremendous reduction of rejects.

2. Resistance heater used for annealing axle pins. Large increase in quality after the installation of control due to the fact that the temperature to be controlled was 1,000° F. and therefore not visible under workshop conditions.

3. Controlling an electric silver-soldering operation in the assembly of stainless steel spokes to wheel rims. Prior to the introduction of photocell control only one joint could be made at a time, against three afterwards; and the percentage of rejects was considerably reduced.

4. Automatic indication, without any human judgment, of the pouring temperatures in a foundry. The indication was reduced to a matter of three coloured lamps.

Red	Metal too hot.
White	Metal correct.
Blue	Metal too cold.

Concluding Remarks

The question may be raised as to whether the electronic control of heat is a paying proposition and the answer is " Yes," if correctly and expertly applied. To quote some examples. The United States Steel Corporation have found that customers' requirements regarding grain size, tensile strength, etc., make the accurate control of furnace temperature essential. A number of their furnaces have been fitted with photocell control, with the cells viewing the crown of the furnace, rather than the actual metal. The control permits a higher average temperature while the furnace is in operation, reducing the time to process the steel and yet causing less deterioration of the refractory brick linings. In non-regulated furnaces it was found necessary to shut down for re-lining after about 300 batches of steel, whereas when controlled this figure increased to 450-500. To obtain the greatest advantage from the union of electronics and heat it will be necessary to develop more apparatus which is inherently electronic. Many of the existing instruments are simply electronic additions to principles which are well known and established.

To do this effectively will require a much closer investigation into the many ways of measuring temperature, which, incidentally, cannot be numbered. This may seem somewhat startling, but a few minutes' reflexion will recall many cases of " temperature coefficient " in technical and scientific work and each case is a potential starting point for the development of a new type of thermometer or a better type of heat control instrument.

For example, the radio engineer usually becomes worried when his oscillators show frequency drift with temperature change, but since he can measure frequency very accurately there is no reason why the previously hated drift should not be harnessed into a very open scale thermometer. We may even see the day when radio engineers deliberately build oscillators having as large a change of frequency with temperature as possible.

In a symposium of the American Institute of Physics, F. M. Behar made an excellent classification of the various methods of measuring temperature, and for the interest of those who may care to explore new electronic possibilities, it is reproduced here as Table I, to guide them to the most promising fields. Behar also made a classification of existing industrial temperature instruments and this is given in Table II.

TABLE II

CLASSIFICATION OF INDUSTRIAL TEMPERATURE INSTRUMENTS

I. Mechanical Effects

1. Liquid-in-glass (visible column).
   (a) Mercury (—38° to 540° C.).
      (1) Etched stem (laboratory or chemical).
      (2) Industrial.
      (3) Miscellaneous (pocket, wall, etc.).
   (b) Spirit (Typical ranges: Pentane– 180 to 20 C. Alcohol 70° to 120° C.)
      (1) Etched stem.
      (2) Industrial.
      (3) Miscellaneous (pocket, wall, etc.).
   (c) Gallium-in-quartz (31 to 1000° C.).
2. Pressure Spring.
   (a) Mercury (38° to 538° C.).
      (1) Non-compensated (tube length 25 feet).
      (2) Head-compensated (tube length 35 feet).
      (3) Fully compensated (tube length 150 feet).
   (b) Non-mercurial liquid expansion (– 40 to 400 C.).
   (c) Vapour Pressure (30° to 370° C.).
      (1) Progressive Scale (tube length 150 feet).
      (2) Uniform Scale.
   (d) Gas (130 to 538° C.), tube length depends on bulb volume.
3. Solid Expansion.
   (a) Bi-metallic (upper limit about 550 C.).
   (b) Metal and Refractory (upper limit for Monel about 650 C.).
4. Fusion (pyrometric cones).

II. Electrical Effects

1. Electrical Resistance.
   (a) Platinum (180 to 1000° C.).
   (b) Nickel, etc. (– 180° to 200 C.).
2. Thermoelectric. Note dual classification.
   (a) Galvanometric. (a) Rare metals (to 1600 C.).
   (b) Deflection and semi-potentiometric. (*a*) Special Alloys (to 1300 C.).
      (*b*) C—SiC (to 1800 C.).
3. Total Radiation (lower limit 400° C.).
   (a) Hand.
   (b) Autometric and autographic.
4. Selective Radiation (lower limit 550° C.).
   (a) Photometric.
   (b) Disappearing filament. (*a*) Visual.
   (c) Flux extinction. (*b*) Autometric and autographic.
   (d) Colour ratio.

A C.R.O. Time Base Coupled to a Rotating Shaft

By P. R. MARSHALL, Ph.D., A.R.I.C.*

IN the study of recurrent phenomena arising due to the rotation of a shaft it is usual to display the variation of the parameter under investigation as a deflection in the Y-direction on a C.R.O. It is frequently possible to form a clearer picture of the dependence of the parameter on the position of the shaft if the time-base sweep time is equal to the time of one, *n* or 1/*n* revolutions of the shaft, where *n* is a whole number. If the shaft is rotating at constant velocity, the oscillograph time base can be set fairly close to the position required and then "locked" to a synchronising pulse made once per revolution by a contactor on the shaft. Such an arrangement, however, will not tolerate even a moderate change in shaft velocity if it is to remain in synchronism. In some work, moreover, the shaft is not rotating at constant velocity; during brake testing on inertia machines, for example, the speed of the shaft may vary from 1,000 r.p.m. to zero when the brake is applied. The problem, then, is one of producing a voltage proportional to the angle through which the shaft has turned from an arbitrary zero position. In the simplest case, for example, that of a shaft rotating at constant velocity, the voltage required will have a saw-tooth wave form of constant periodicity. If the shaft is accelerating or decelerating the wave form of the voltage required will be a more or less distorted saw-tooth, the exact form of which need not be known. In the work described below, the time-base sweep time is made equal to the time of one revolution of the shaft. It could be made equal to the time of *n* or 1/*n* revolutions of the shaft by the use of gearing or by altering the design of the cam mentioned below.

Design of Apparatus

The simplest method of generating the required saw-tooth wave to feed to the X-plate is to use a circuit such as that shown in Fig. 1. The author found it impossible, however, to obtain a rotating resistance that would last long at speeds of 1,000 r.p.m. A further difficulty was that the "dead space" between the ends of the windings could not be made sufficiently small without the wiper arm shorting out the circular resistance once per revolution.

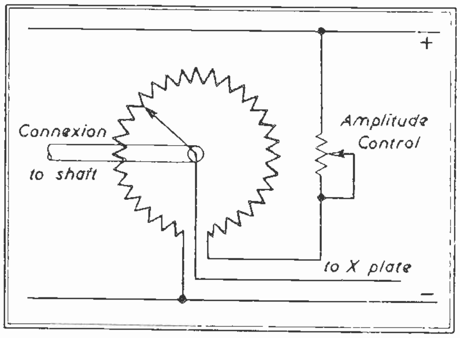

Fig. 1. Simple saw tooth wave generator using potentiometer coupled to a rotating shaft

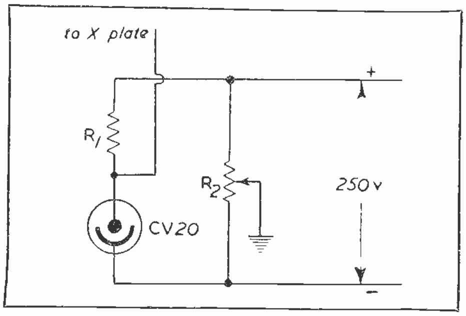

Fig. 3. Linear sweep circuit with Mullard CV 20 photo-cell

Component Values

R_1 15 M ±20% $^1/_{10}$ watt.
R_2 1 M potentiometer.

It was therefore decided to mount on the shaft a spiral-cam to interrupt light falling on a photo-cell. It was necessary that when the shaft came to rest, the C.R.O. beam should also come to rest at a point corresponding to the position of the shaft. Assuming that an X-sweep length of about 100 mm. on the tube face is required, the photo-cell apparatus must be capable of delivering about 225 volts (peak-to-peak of saw-tooth wave) if a Cossor double beam 09 tube is being used. Had this system been adopted, considerable difficulties in D.C amplifier design would have had to have been met.

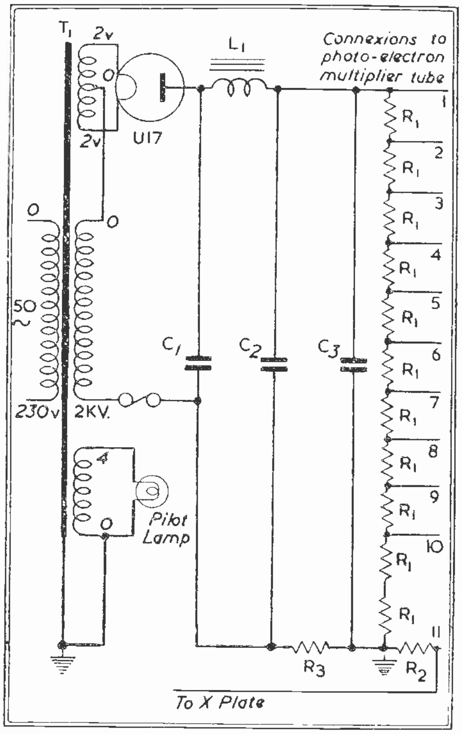

Fig. 2. Photo-electron multiplier tube circuit using R.C.A. 913A tube

Component Values

R_1 20 K ±5% 1 watt.
R_2 330 K ±5% 1 watt.
R_3 100 K ±20% 6 watt.

C_1 0.25μF 3000 V D.C.
C_2 0.33μF 3000 V D.C.
C_3 1.0μF 2000 V D.C.

L_1 115 Hy.
T_1 Gardners type H.V. 308.

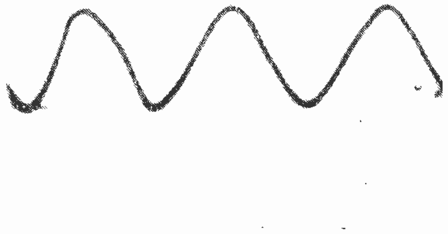

Fig. 4. Oscillogram of sine wave applied to Y plates showing linearity of sweep

The use of a photo-electron-multiplier tube overcame the amplifier design difficulties. The circuit, shown in Fig. 2, uses the R.C.A. 931A tube[1] and is capable of producing an output wave of amplitude 250 volts, although this is at the expense of linearity. In order to produce a saw-tooth wave with a sufficiently linear rise for use as a time base, the amplitude had to be reduced to about 100 volts peak-to-peak, and this was sufficient to sweep the beam only about 45 mm. across the tube face.

Experiments with the Mullard

---

* Physics Research Department, Ferodo Limited.

CV20 photo-cell, connected in the circuit shown in Fig. 3, showed that a linear sweep about 90 mm. long on the C.R.O. screen could be produced as the shaft carrying the spiral cam was rotated. Fig. 4 is an oscillogram taken with a sine wave on the Y-plates, from which the linearity of the sweep may be assessed.

Optical System

The source of light is a 100-watt pearl bulb supplied with D.C. It is placed in a lamp house, the window of which is a circular piece of "milk" glass 4½ in. diameter. The window is placed close behind the spiral cam, which has a pitch of 1½ in., and close to the cam on the other side is an aperture 2 in. by ½ in. through which the light passes to the CV20 photo-cell. It has been noticed during the course of this work that the most linear variation of photo-cell output with cam position is obtained if a large area of the photo-cathode is illuminated and the output obtained by varying the intensity of the light rather than by causing a shadow to move over the illuminated area.

(a) Measurement of Slip

When a drive is taken from one pulley to another of equal size by means of a "V" belt, the driven pulley does not rotate as fast as the driving pulley due to the belt slipping slightly at both pulleys. During the testing of "V" belts a knowledge of the slip (difference in speed of driven and driving pulleys) is often required. As the slip does not often exceed 10 per cent of the speed of the driving pulley, its accurate measurement by means of a tachometer is not easy. If the accuracy of measuring the speed of each shaft is ½ per cent, as with electrical tachometers, an error of 10 per cent is possible in a measurement of the slip. Electrical tachometers are employed in the slip recorder of Haglov and Parker,[2] the readings of which are reproducible to 0.2 per cent slip.

If the speed of rotation of the driving pulley, the load or the belt tension are made continuously to vary, the measurement of the slip becomes very difficult.

At the suggestion of Mr. A. H. Balkham,* the apparatus described above can be used to observe slip. The spiral cam is mounted on the driving pulley and a disk with one hole in it is mounted on the driven pulley. The light source and photo-cell are arranged so that the X-sweep of the C.R.O. is coupled to the driving pulley. A second source of light and photo-cell are arranged so that the light flashes on the photo-cell as the driven pulley rotates. The output of the second photo-cell is a negative pulse which is displayed on the C.R.O. in the Y-direction. Slip between the two shafts then appears as a movement of the pulse along the trace, and may be easily and accurately measured by timing *n* traverses of the pulse with a stop-watch.

(b) Production of any Required Wave-Form

A cam mounted on a rotating shaft can be cut so as to produce any desired wave-form at a frequency dependent on the speed of rotation of the shaft.

Acknowledgments

The author is indebted to the Directors of Ferodo Limited, in whose laboratories the above work was carried out, for permission to publish this paper, and to colleagues in the Research Division who made the pieces of apparatus.

References

[1] J. A. Rajchman and R. L. Snyder. *Electronics*, 1940, Dec., 20.

[2] N. Haglov and R. C Parker, *Engineering*, 1947, Oct., 17th, 365.

---

* Test House, Ferodo Ltd.

Stand-by Operation of Battery-driven Radio Apparatus

IN mobile radio apparatus operated from storage batteries, it is often desirable to run equipment, such as a radio transmitter, in a stand-by condition with the battery loading reduced to a minimum but, at the same time, the transmitter must be capable of being brought rapidly to fully operational conditions. To achieve this object, the valve filaments are usually left running, but the H.T. supply is removed.

The H.T. is normally supplied by means of a vibratory interrupter and where this is of the type incorporating a separate driving contact for the vibrating reed, a simple switching arrangement, as illustrated in the circuit diagram, can be employed. In addition to a main isolating switch S_1, a further switch S_2 is included to break the circuit to the vibrator transformers and the driving contact during stand-by periods.

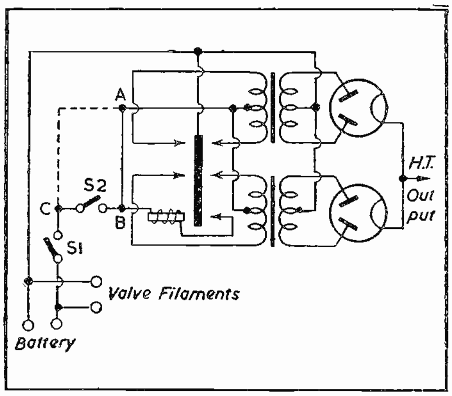

The L.T. current taken by the interrupter may, in 6-volt operation, be of the order of 15 amps., and thus the switch S_2 will have to be capable of carrying this current and consequently a heavy duty switch with substantial contacts will be required.

A simpler arrangement can be achieved by connecting points *A* and *C* instead of *A* and *B*, as shown in dotted lines in the diagram. Thus it will be seen that in this case the switch S_2 is only effective to break the feed to the energising coil for the separate driving contact. In the rest position of the vibrating reed the moving contacts do not make with the fixed contacts, and, so long as switch S_2 is open, no H.T. will be supplied. However, on closing switch S_2, the vibrator commences to operate and the transmitter reverts to fully operational conditions.

Since the current consumption of the energising coil is ½ amp. or less, the switch S_2, in the latter arrangement, can be of much smaller dimensions, with consequent saving in cost and increase in speed of operation.

—*Communication from E.M.I., Ltd.*

Reducing the Effect of Capacitance in Screened Cable

By V. H. ATTREE, B.Sc. (Eng.)*

The effect of capacitance in a screened cable may be reduced by using an intersheath, driven by a cathode follower located at the remote end of the cable. In a typical example a cable of normal capacitance, 20 $\mu\mu$F/ft. has an effective capacitance of 1.4 $\mu\mu$F ft.

IT is frequently required to run a high-impedance generator such as a crystal pick-up or photo-cell several feet away from its amplifier. A simple co-axial connecting cable cannot normally be used, as the capacity of the cable will cause a serious loss of high-frequency response. Accordingly, the usual practice is to fit a small "head-amplifier," deriving its power supplies from the main amplifier, and located very close to the high-impedance generator. This arrangement is inconvenient, as it involves additional connecting leads and a robust design for the head-amplifier. One way of overcoming the difficulty is to use a cable with *two* concentric layers of screening insulated from each other. The outer screen is earthed in the usual manner, while the inner screen, or intersheath, is driven from a cathode follower which can be located at the main amplifier. The circuit is shown in Fig. 1.

The output impedance of the cathode follower is very low (certainly $<1000\Omega$) and the cathode potential will be very nearly in phase with the grid potential (*see* Equation 3 later) but of slightly reduced amplitude. Thus, at any instant, the potential to earth of the intersheath "B" is very nearly the same as the potential to earth of the conductor "A". The relative potential between "A" and "B" is therefore small, so that the effective capacity of "A", to the earthed screen "D", is considerably reduced.

The use of an intersheath was first suggested by J. T. Morris in 1907† as a means of reducing the maximum dielectric stress in a power cable. The present application is, of course, analogous to the well-known "Guard Ring" method of overcoming leakage from a high resistance point.

If the cathode follower has an amplification factor μ; an anode impedance R_A and a cathode load R_K, then the amplification m is given by:

$$m = \frac{\mu}{(\mu + 1) + R_A/R_K} \quad \ldots\ldots\ldots \quad (1)$$

The effective capacity C_{AD} of the conductor "A" to the earthed screen "D" becomes:

$$C_{AD} = (1 - m)\, C_{AB} \quad \ldots\ldots\ldots\ldots\ldots \quad (2)$$

where C_{AB} is the physical capacity of the conductor "A" to the intersheath "B."

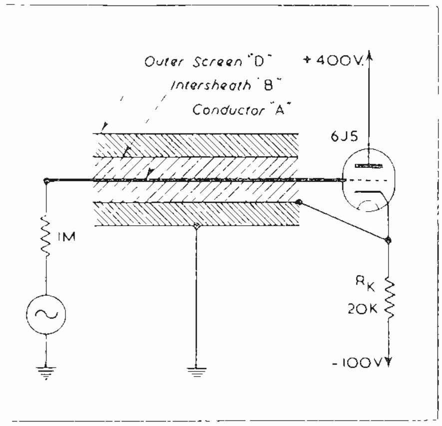

Fig. 1

If R_K is made large then the output impedance of the cathode follower is $1/g_m$ or R_A/μ. Therefore, at a frequency f the phase delay ϕ of the cathode waveform relative to the grid waveform is given by:

$$\phi = 360\, R_A\, f\, C_{BD}/\mu \text{ degrees} \ldots (3)$$

providing ϕ is small, and where C_{BD} is the capacity of the intersheath "B" to the earthed outer screen "D".

Co-axial cables with an intersheath are not generally available, but a suitable cable may be constructed by slipping the braiding from a piece of Uniradio No. 1 on to a length of Uniradio No. 32. If the braiding from the U.R.1. is contracted slightly, no difficulty will be found in threading on lengths of up to about 12 ft. The outer protective layer of P.V.C. on the U.R. 32 has rather a poor power factor, but this is unimportant as the P.V.C. forms the dielectric in C_{BD} which is driven by the cathode follower. For the completed cable C_{AB} = 20 $\mu\mu$F/ft. and C_{BD} = 160 $\mu\mu$F/ft.

In a practical case the signal developed across a resistance of 1 MΩ was to be fed to 5 ft. of cable with a cathode follower as shown. Now R_K = 20K and for the 6J5, μ = 20, R_A = 10K, while for 5 ft. of cable C_{AB} = 100 $\mu\mu$F. Hence, from Equations (1) and (2) m = 0.93 and C_{AD} = 7 $\mu\mu$F, which means that the effective capacity of the cable is only 1.4 $\mu\mu$F/ft. The measured value of the stray capacity (grid/anode, etc.) was 12 $\mu\mu$F, giving a total capacity of 19 $\mu\mu$F, so that the frequency response should be 3 db. down at 8.4 Kc/s. The measured value, for 3 db. down, was 8 Kc/s. The capacity C_{BD} is 5 × 160 = 800 $\mu\mu$F, hence at 8 Kc/s. the phase shift ϕ from Equation (3) is 1.1°. This shown that the previous assumption of negligible phase shift at the cathode was justifiable.

With suitable design the arrangement may also be used instead of a cathode follower probe unit on an oscilloscope intended for video frequencies. It will, of course, be appreciated that satisfactory operation is only possible up to frequencies where the cable may still be regarded as a lumped capacity: *i.e.*, where the electrical length of the cable is a small fraction of a wavelength.

---

[*] Biophysics Research Unit, University College, London.

[†] J.I.E.E. 40, p. 50.

A Linear Resistance-Charged Gas Relay Time Base

By E. J. B. WILLEY, D.Sc., Ph.D.

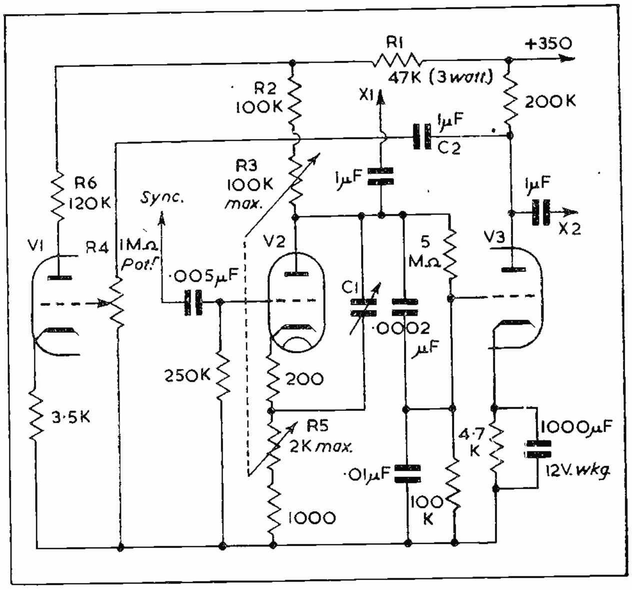

Fig. 1. V_1, V_3 — ½ ECC 35. V_2 — GTIC. R_3 and R_5 ganged to maintain constant bias voltage and output amplitude independent of repetition frequency. C_1 — 1.0 μF to Ca. 0.003 μF in steps, to cover range 10 — 10^1 c/s.

IT is a considerable disadvantage of the conventional gas relay time base that the cathode of the relay and its associated heater inevitably are at a high mean potential above ground. This entails the use of a special transformer wherein one winding is both very well insulated and also screened to minimise the risk of pickup in the sensitive grid and cathode circuits of the relay, this winding being usable for the one valve only. The present circuit* is intended to avoid this difficulty, having other incidental advantages as well.

The time base capacitor C_1 (Fig. 1) is charged through the resistances R_1-R_3, only R_3 being variable to control the repetition frequency. The voltage at C_1 is applied through a frequency-independent divider to the grid of one half (V_3) of the double triode whose anode is taken both to one deflector plate of the cathode ray tube and through the divider C_2R_4 to the grid of the other section (V_1) of the same valve. As C_1 charges, the anode of V_3 and the grid of V_1 are both driven negative the anode current in the latter valve being reduced and a proportionate positive voltage increment applied to the top of R_2 and R_3 since R_1 is common to the anode circuits of both V_1 and V_3. With appropriate circuit components, this voltage increment can be made of the correct magnitude and time-rate to compensate almost exactly for the normal exponential voltage-time relation at C_1, a linear sawtooth wave thus being obtained. Detailed analysis would be complicated, since while the anode of V_1 is becoming more positive (as it is in parallel with that of V_2) its grid is becoming more negative, this effect predominating since a valve of fairly high amplification factor is used. Moreover, the mean standing potential at the anode of V_1 will fall as the charging current to C_1 is increased to raise the repetition frequency. It is therefore advisable not to allow the charging current to change too much between maximum and minimum, wider variation of this frequency being obtained by use of additional capacitors brought in as required by a selector switch. If we work over the range 1-3 mA, which is in any case convenient for the usual small variable resistance, the mean standing voltage at the anode of V_1 will not change by more than about 45 V, which does not noticeably affect the operation of the valve in this circuit. Any much larger variation would, however, take the anode out of the region where the characteristic is sensibly exponential, so that the necessary compensation could not be obtained, although if R_6 is ganged with R_3 so that both are reduced in value together, the mean voltage at the anode of V_1 can be held approximately steady. This is not, however, necessary if capacitors are used, as indicated.

This circuit differs from others for linearisation of the trace in that the correction is applied actually at the time base capacitor itself, so that since voltages here and at the anode of V_3 are in phase opposition, push-pull output can be obtained. The signal at the grid of V_3 is therefor scaled so that when amplified it equals that at C_1. A peak-to-peak swing of about two thirds of the total H.T. voltage can then be obtained, a very great improvement upon the 10 per cent or so usually realised with resistance charging methods.

Too high a bias should not be used for the gas relay, since the curvature of the characteristic may then become more than this circuit can correct. With 350 V H.T., about 3 V is a convenient value, giving about 100-110 V swing at each of the points from which output may be taken.

In setting up the circuit, R_4 is adjusted until the best sawtooth wave develops, and then locked down. From about 25 c/s and above, this adjustment seems independent of repetition frequency, but below this frequency some resetting may be necessary, doubtless owing to the effects of coupling and bypass capacitors. A check upon linearity is best obtained by applying the output from a variable frequency oscillator to the Y-plates of the tube while using this time base for the X-deflection; the distances between wave crests should of course be constant.

This arrangement is not recommended for large tubes, or where high precision is required, but for small tubes or fixed-frequency time bases it has considerable value. It can be operated from any ordinary transformer, requires only two valves, gives immediate response to the frequency control, provides for push-pull output, and since all heaters and the cathode and grid of the gas relay are close to ground potential, is practically immune from risk of pickup.

---

* Prov. Pat. 1867/48.

Two New Multivibrators

By Capt. CHANG SING, B.Sc.,* and Capt. CHANG CHU-I, B.Sc.*

As is known, to produce a square wave automatically any of the following circuits can be used: a phantastron, transitron, blocking oscillator and an anode-coupled or cathode-coupled multivibrator. Other than the circuits mentioned, no free-running multivibrator circuits have been developed.

Fig. 1 shows a new circuit of a free-running multivibrator. It may be considered to be a modification of the Eccles-Jordan trigger circuit by simply adding two capacitors connected between the H.T. supply and the cathodes of both valves. By means of these two additional capacitors the free-running action can thus be obtained. We may further consider that the new circuit is derived from Puckle's time-base circuit by only using two discharging valves with the anode and grid of one valve cross-connected to those of the other. The action of the circuit is illustrated in Fig. 2. When the switch is on, C_1 and C_2 tend to charge. Due to the impossibility of perfect balance, it may be assumed that V_1 draws more current than V_2. V_1 anode falls and brings V_2 grid with it. The action causes V_2 anode to rise and make V_1 conduct more. By cumulative action V_1 conducts heavily and V_2 cuts off. C_1 discharges to bring V_1 cathode towards its grid. At the same time C_2 still charges up; V_2 cathode will then be decreased until it overtakes its grid base. When this state is reached, V_2 starts to draw current and the circuit is switched over. Then V_2 conducts heavily and V_1 cuts off. C_2 discharges to bring V_2 cathode towards its grid. C_1 charges to make V_1 cathode decrease until the conducting point of V_1 is reached. Then V_1 begins to draw current and the circuit is switched over again. The action is then repeated in a similar manner.

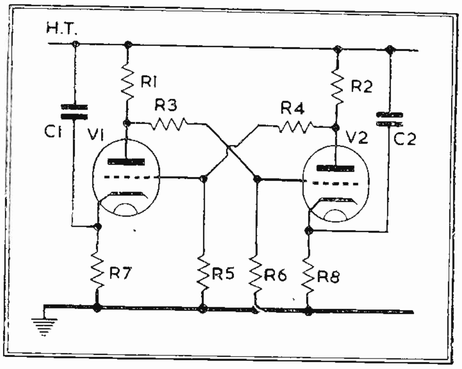

Fig. 1. Modified Eccles-Jordan trigger circuit

Component Values

V_1,	V_2	6J5
C_1,	C_2	4 to 0.5μF
R_1,	R_2	10—75KΩ
R_3,	R_1	1—2 MΩ
R_5,	R_6	1—5 MΩ
R_7,	R_8	0.5—1 MΩ

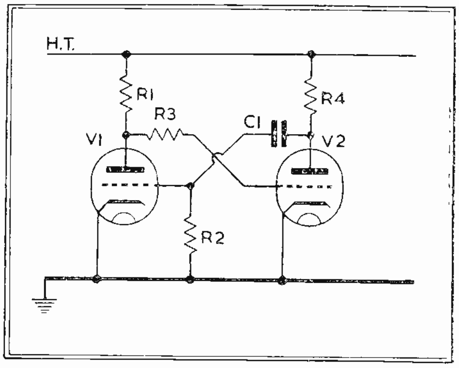

Fig. 3. New circuit for free-running multivibrator

Component Values

V_1,	V_2	6J5
C_1		0.01μF
R_1,	R_4	50 KΩ
R_2		250 KΩ
Ri		100—250 KΩ

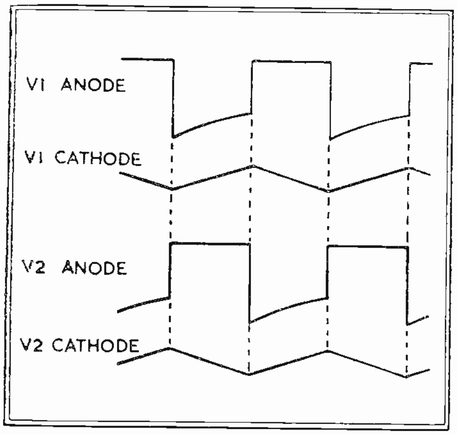

Fig. 2. Anode, cathode wave-forms produced by multivibrator circuit shown in Fig. 1 above

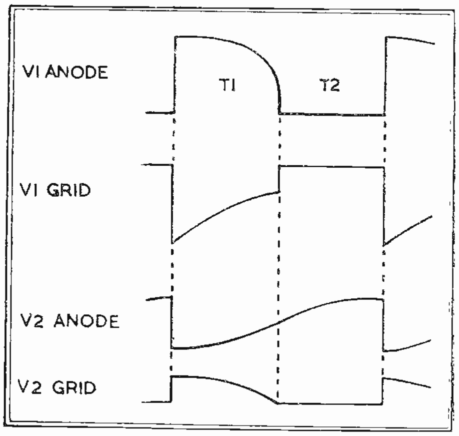

Fig. 4. Anode, grid wave-forms produced by multivibrator circuit shown in Fig. 2

The square waveforms at the anodes are similar to those produced by an electron-coupled multivibrator with pentodes. But at the cathodes isosceles triangular waveforms are produced. One side of each waveform is the voltage across the cathode resistance when the capacitor C_1 (or C_2) charges up, the other side of the waveform is the discharging voltage of C_1 (or C_2) through the valve. By the use of suitable values of various components, the isosceles triangular waveform is almost perfect. Moreover, the charging side is quite linear due to its functioning as a Puckle time base circuit.

The following points should be noted:

(a) The values of the capacitors C_1 and C_2 must be large enough to provide the switching action, otherwise the valves cannot be driven to cut-off. If they are charged too quickly the operation will not start. By using a large value of resistance in the cathode of the valve, the charging time may be lengthened.

(b) The divider R_1, R_3 (or R_2, R_4) will result in an increase in the drop beyond cut-off and will therefore reduce the repetition frequency. Hence any one of those resistances can be used as a fine control for repetition frequency. The coarse control is provided by choosing a different value of capacitor.

(c) So far the action has been considered as symmetrical—that is, with each corresponding pair of components exactly matched. But the circuit can still work very well as an asymmetrical one.

Fig. 3 shows a second new circuit of a free-running multivibrator. In this case, the grid of V_1 is switched alternately from zero to about cut-off, while the grid of V_2 is always positive, so that V_1 is conducting

---

* Chinese Air Force.

periodically and V_2 is always taking grid current and V_1 anode is made below the H.T. The waveforms obtained are shown in Fig. 4.

During the half cycle (T1), should V_1 grid be driven to cut-on point, clearly the rising half-cycle of V_1 anode would be square. But due to the small anode waveform of V_2 and the slow switching-in of the valve, the V_1 grid is approaching the curved part of its characteristic curve; thus the anode waveform cannot be perfectly square and a curved fall results. The rising edge of V_1 anode is sharply vertical as there is no associated capacitor in the anode circuit. V_2 grid is similar to V_1 anode, but smaller in scale. V_2 anode is obviously reversed in waveform to its grid. V_1 grid is rising linearly instead of exponentially. This is due to the combined action of the exponential rise of C_1 discharge and the upward trend of the V_2 anode waveform. When V_1 grid rises towards conduction, V_1 starts to take current, and the circuit is switched over—*i.e.*, V_1 conducts fully and V_2 conducts less. During this period (T2) the waveforms of V_1 anode, V_1 grid and V_2 grid are self-explanatory. V_2 anode rises exponentially because of the charge of C_1. Since V_2 grid remains steady and V_2 anode rises to a certain value, the anode will take more current; this causes V_1 effectively to drop. Then the circuit is switched over again—V_1 cuts off and V_2 conducts fully.

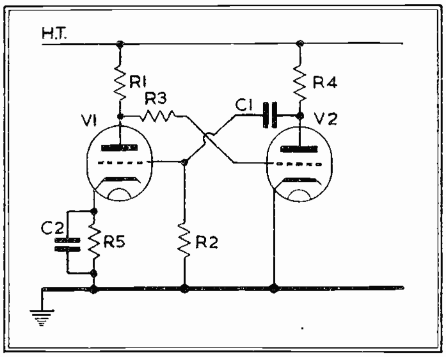

Fig. 5. Multivibrator circuit of Fig. 3, with addition of self-bias combination C_2, R_5

Component Values

V_1, V_2	6J5
C_1	0.01 μF
C_2	0.002—0.006 μF
R_1, R_4	50 KΩ
R_2, R_3	250 KΩ
R_5	25—100 KΩ

Thus the repetition frequency is dependent on the capacitor C_1 and its associated constants. We can thus conclude:

(a) Change of C_1 varies both T_1 and T_2. As C_1 decreases, T_1 decreases, T_2 decreases, and so the frequency increases.

(b) Change of R_2 affects T_1 only. As R_2 decreases, T_1 decreases, so the frequency increases. The smaller the value of R_2, the more square the waveforms of V_1 anode and V_2 grid.

(c) Change of R_3 affects T_1 alone. As R_3 decreases, T_1 increases, so frequency decreases. R_3 must not be too great, or too much attenuation is imposed upon V_2 grid and the circuit will not operate.

(d) Varying R_1 and R_4 varies the load condition of the valves.

(e) When C_1 is large enough, it may be necessary to raise the anode supply voltage or to employ cathode current feedback to sustain oscillation.

It is interesting to note what happens if a combination of R_5 and C_2 is inserted in the cathode of V_1 as shown in Fig. 5. As the capacitor charges and discharges through the resistance, it acts as a self-bias. When the *R-C* combination is properly chosen and the cathode bias is properly adjusted in order to limit the grid drop of V_1 with respect to its cathode within its grid base, the circuit becomes an ordinary positive feedback oscillator. The output voltage taken from V_1 anode will be sinusoidal. If V_1 cathode is adjusted further, the circuit will operate as a multivibrator as in the previous case with a repetition frequency determined by C_1 and its associated circuits. The frequency may range from a few cycles to ten kilocycles per second. Its stability is good. Oscillation in this circuit occurs more readily than with the *R-C* phase shift oscillator.

ABSTRACTS OF ELECTRONIC LITERATURE

A Solution of the Problem of Rapid Scanning for Radar Antennae

(R. F. Rinehart)

The problem of devising a rapid scanning focusing antennae based on wave-guide principles has been solved only approximately and none too satisfactorily. It is shown in this paper that a known property of a plane optical system with variable index of refraction is shown to satisfy the requirements of such an antennae system. The plane variable refractive index system can be transformed into a surface revolution of constant refractive index which reproduces the optical properties of the plane system. It is stated that this surface provides an apparently practicable solution to the scanning problem, and it is shown that the diameter of the feed circle can be made arbitrarily small by judicious use of an ellipsoidal reflector.

—*Jour. Appl. Phys.* September, 1948. p. 860.*

Phase modulation Principles applied to Sound Recording

(J. A. Sargrove, D. A. Bell, and N. Leevers)

The "Phasitron" method of phase modulation, devised by one of the authors for measuring minute changes in pressure, can be applied to high-fidelity recording by small microphones. The advantages of constant carrier amplitude systems with phase modulation are well known, and can be used for A.F. recording. As such systems are independent of C-R time constant networks, they are better able to reproduce low frequencies. A small microphone with ½-in. diaghragm was demonstrated in conjunction with the Phasitron circuit.

—*British Kinematography* (formerly *Jour. B.K.S.*). To be published.

Electronic Motor Control for a Printing Press

This motor control equipment for a printing press has been specially developed for drives requiring a wide speed range from D.C. motors. The necessary conversion from the A.C. supply is obtained by ignitrons connected as a three-phase, full-wave rectifier. No rectifier transformer is required for the normal supply voltages of 400/440 volts, and, using the largest size of ignitron at present available, motors up to 300 h.p. can be controlled over a speed range of 100:1 with the circuit which is described. Both field and armature control is utilised in this method.

—*B.T.H. Activities.* November-December, 1948. p. 435.*

---

* Abstracts supplied by courtesy of Metropolitan-Vickers Electrical Co. Ltd. Trafford Park, Manchester

CORRESPONDENCE

Automatic Gain Control for Vision Receivers

DEAR SIR,—The article by D. McMullan in the November issue is of interest to all viewers living close to an airport, as the fading there experienced is usually frequent and serious. It seems a pity, however, that the control system should be limited by the time constant of C_3R_8. It would appear that the ideal would be to have a low time constant during the frame synchronising pulse, but an infinitely high time constant during the frame scanning period.

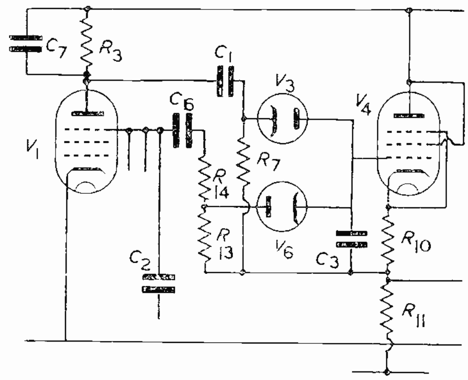

Suggested Component Values :—

$C_1 = 0.1\mu F$
$C_2 = 0.1\mu F$
$C_3 = 0.001\mu F$
$C_6 = 0.01\mu F$
$C_7 = 0.002\mu F$

$R_3 = 50K$
$R_7 = 100K$
$R_{10} = 300$
$R_{11} = 100K$
$R_{13} = 5K$
$R_{14} = 5K$

The circuit suggested above should provide such a result. It will be seen that R_8 is omitted so that C_3 does not discharge during the frame scanning period. At the beginning of the frame synchronising pulse, the gating pulse applied to the suppressor of V_4 through C_2 is differentiated by C_6 and $R_{13} + R_{14}$ to partially discharge C_3 through V_6. By the time this discharging pulse has decayed, the condenser, C_7, has charged and a negative-going pulse is thus applied through V_3 to recharge C_3 to the new level which it is required to hold during the succeeding frame scanning period.

C_7 should smooth out impulsive interference so that R_9 of the original circuit is no longer necessary. Also, far less filtering of the voltage appearing across R_{11} should be required since the current through V_4 is constant during the scanning period.

Using a circuit of this nature it should be possible to hold the black level steady even when the aircraft echo destroys line synchronisation.

D. M. NEALE

Brentwood, Essex.

Mr. McMullan Replies

Mr. Neale's suggestion concerning the time constant of C_3R_8 is quite correct, but his circuit is unlikely to be satisfactory as it stands. It is not sufficient to partially discharge C_3 at the start of the synchronising period and then to rely on its potential rising to the correct value, as it will overshoot and the gain of the receiver will be reduced to a low level during the frame period. This effect will be aggravated by C_7 and also by omitting R_9. It is essential that the time constant of C_3R_8 should be kept at its low value throughout the frame synchronising period and this might be achieved by applying the undifferentiated gating pulse to V_6.

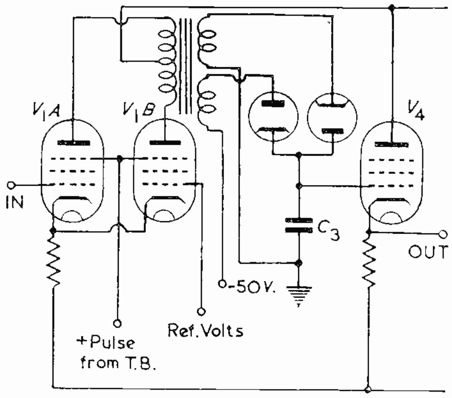

Since writing the article I have had some success with a circuit designed to achieve the same result (see above). During the frame synchronising period negative or positive pulses appear on the secondaries of the 1 : 1 transformer (depending on whether the black level is higher or lower than the reference voltage) and these charge or discharge C_3, the voltage across which remains constant during the frame. As the voltage changes on C_3 are large, V_4 may be a cathode follower, simplifying the provision of bias for the diode.

Mr. Neale's arrangement is certainly attractive, but care must be taken to ensure that V_6 becomes non-conducting simultaneously with V_1, so as to avoid over- or under-shooting. Difficulty may be experienced due to the shape of the pulse from the time base, and it would also seem essential to work V_4 as a cathode follower, so that one side of C_3 can be earthed. The voltage changes on C_3 will, because of its small capacity, be large enough to make this possible.

Review of "Electronics"

DEAR SIR,—I should be pleased to have the opportunity of correcting a number of misleading statements made by H. A. Thomas in his review of "Electronics" in the December issue of ELECTRONIC ENGINEERING.

Electronics is not defined as "the science and application of the electron." No formal definition is given, but, on pp. v and 1, it is, respectively, stated, "electronics is based on the concept of the electron and its behaviour under specified conditions," and "Electronics, as the term implies, is concerned with the science and applications of the electron." Both of these statements are followed by qualifying remarks relevant to the fields of inquiry of Electronics. The qualifications do not include "all electrical theory and practice, all electrical engineering, and practically the whole of modern physics."

Einstein's theory is not given, but, if it were, it would not be "thrown in for completeness." Electromagnetic theory is employed to derive the result that the mass of a body is a function of its velocity, a result which, of course, may also be derived from the Restricted Theory of Relativity.

Gas-filled diodes are covered in Chapter 9 and not in "Chapters 9 *and* 15." Chapter 15 is entitled "Grid-Controlled Rectifiers, Inverters, and Frequency Changers."

Chapters 6 and 7 are, respectively, entitled, and deal with, "Electron Optics" and "Luminescence." Chapter 17, "Cathode-Ray Tubes and Associated Circuits," covers the subjects of its title. Thus there are not three chapters devoted to the cathode-ray oscillograph.

The introduction to Chapter 16 and the bibliography should dispel any impression a reader may have that "electronic devices have been used solely to measure the electrical

CORRESPONDENCE

parameters, voltage, current, resistance, and power." Eight valve voltmeters are described, not three. There is no description of "a crude temperature measuring device," whatever this may mean.

Induction and dielectric heating are not treated, partly owing to limitations of space and partly for the reason given in an article under the name of H. A. Thomas in "The Engineer" of April 4, 1947, *i.e.*, that such heating methods strictly should not be regarded as electronic.

If the omission of certain American references is due to unawareness of this literature, it is probably not due to nationalism. If due to nationalism, it is probably not due to unawareness. The reviewer's two implications tend to be mutually exclusive. The McGraw-Hill book mentioned on p. 222 is, of course, an American one.

The major subjects mentioned do not appear in the index because they may be readily found in the index of contents.

Finally it may be said that, in "Electronics," no claim is made to present "a balanced view of the whole subject" nor "to cover the whole field." In particular, little or no attention is given, nor was intended to be given, to what is sometimes termed Industrial Electronics. This is a subject which merits a separate book, as recent additions to the technical Press testify.—Yours faithfully,

F. G. SPREADBURY

Potentiometers for Computing Circuits

DEAR SIR,—The use of potentiometers in computing circuits becomes cumbersome if the variable is to undergo a series of transformations. In a gunsight, for example, the deflection angle, represented by a current, must be varied as a function of range, airspeed, angle of fire and relative target speed, represented by angular displacements of the shafts of non-linear potentiometers connected in cascade. No power may be withdrawn from any potentiometer even though its card be graded to compensate for brush-drain into the load resistance; for this causes the input resistance of the stage to vary with the position of the brush and upsets the performance of the preceding stage. Valve interstages isolating one potentiometer from another add greatly to the complexity and bulk of the computer.

A far simpler solution is to use in each stage two potentiometers linked together as shown. *A* controls the current output, while *B* compensates for variations in input resistance.

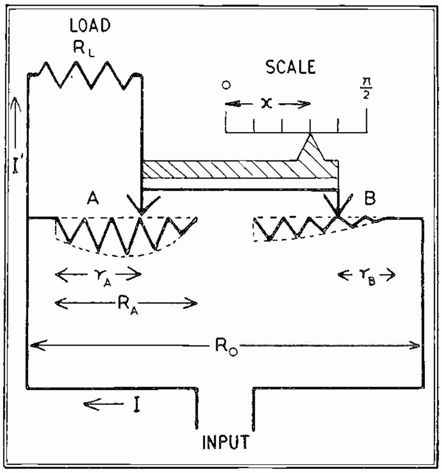

The required properties—that $I'/I = \phi(x)$, where x = shaft deflection, $\phi(\ )$ the chosen function; and that R_0 = const., are obtained if *A* and *B* are graded so that

$$r_A = R_L\phi(x)/(1-\phi(x)) \text{ and}$$
$$r_B = R_L[R_A/(R_L + R_A)-\phi(x)].$$

The widths of the cards in the two cases are given, of course, by the derivatives of these expressions. The total input resistance remains constant at $R_AR_L/(R_A + R_L)$.

The transfer of power into the load can be made quite high (50-80 per cent) and is limited for any given function by the maximum practicable curvature of the card profile. In the figure the shape of the card is indicated for the function $I'/I = 0.5 \sin x$.

Any number of such units may be connected directly together without danger of interaction. Moreover, an appreciable fraction of the input power is delivered at the final output.

D. R. WILKIE, M.R.C.P.

Department of Physiology,
University College, London.

Interference with Radio Reception

DEAR SIR,—Editorial comment, particularly in technical journals, is regarded by many readers as factually true and has a great influence in shaping public opinion on controversial matters. For this reason we cannot leave uncorrected the reference, in your Editorial in the December, 1948, issue, to interference from industrial high frequency heating installations, which reads:—

> "... attention might well be given to the interference caused by the large-scale industrial users of such apparatus as commutator motors and high power oscillators for high frequency heating, which create havoc over a wide area."

This aspect of interference with radio reception is certainly not being ignored. The Industrial High Frequency Heating Section of this Association (comprising most of the leading British manufacturers of such equipment) has had the matter under active consideration for some time; other bodies representing radio and television interests, and Government departments are taking a similar active interest.

The potential danger of interference is, of course, fully appreciated by them, and the manufacturers of I.H.F. heating equipment are alive to the fact that it is in their own interests to build equipment which is as interference-free as possible, especially as many of them are also manufacturers of radio, television, and telecommunication equipment.

The inference from your Editorial is that I.H.F. heating sets are causing widespread interference; the members of our I.H.F. Section reported at a meeting in November last that no such complaints have so far been notified to them, other than one or two trivial cases in exceptional circumstances which were rectified easily and willingly.

The various interests involved are dealing with the whole question on a friendly and co-operative basis, and we trust this letter will help to put the position in its true perspective.

R. BUTLER.

BRITISH ELECTRICAL & ALLIED MANUFACTURERS ASSOCIATION
(Industrial High Frequency Heating Equipment Section)
Kingsway, London.

Electronic Equipment

Dental X-Ray Unit

A NEW X-ray apparatus introduced by Philips Electrical Ltd., is the "Oralix" Dental X-ray Unit.

For this equipment a special X-ray tube has been perfected which is believed to be the smallest ever made for practical application. It measures only 2¼″ (*see photo*).

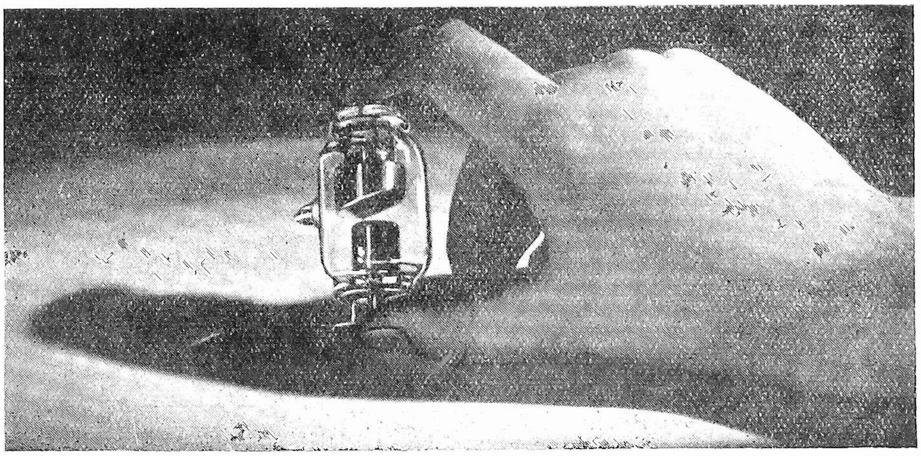

This tiny tube is encased, together with an oil immersed transformer in a container of approximately 5 inches in length, diameter 4 inches. X-rays emerge through the orthodox side window, and a neon lamp in the side of the director cone indicates when exposure is taking place. The cylindrical casing is fitted with a handle which contains an oil expansion chamber to take the increased volume of the transformer oil as it expands with heat.

The exposure of the negative is affected by placing the film, wrapped in light-proof packing, into the mouth of the patient, behind the teeth. While the film pack is thus held in the required position, the direction of the X-ray beam is adjusted to radiograph the particular view required, and the exposure made.

Control of exposure time is effected by a clockwork time switch, held in the hand of the operator, which is calibrated in tenths of a second up to six seconds. When the predetermined exposure time has elapsed, radiation is automatically cut off.

Philips Electrical Ltd.,
Century House, Shaftesbury Avenue.

Miniature Pre-Set Resistors

ELECTRO Methods Limited are now producing a series of miniature, adjustable, circuit balancing or matching resistors, as shown in the photograph below (full size).

These are supplied with resistance values ranging from 5 ohms to 1,800 ohms and have a rating of approximately 3 to 4 watts.

They are conveniently arranged for mounting by means of a screw through the centre of the bobbin. Pre-setting of the resistance value can be carried out by means of a screwdriver during lining up or assembly process.

Electro Methods Ltd.
220, The Vale, N.W.11.

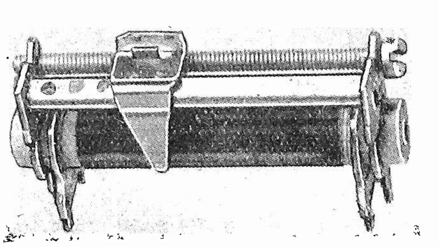

Electronic Balancing Machines

THE purpose of this instrument recently produced by Scophony is the determination of the position and the amount of out-of-balance masses occurring in bodies such as armatures and rotors during rotation, in order that dynamic balance may be established by the addition or removal of metal. Thus vibration may be eliminated and wear and stresses upon the bearings greatly reduced.

To eliminate the effect of dynamic unbalance in a body having rotational velocity, compensation must be affected at two vertical planes, the position of the planes being determined by the most convenient portions of the body at which material may be added or removed.

The body to be balanced is placed in the half bearings of a cradle and driven at a convenient speed by means of a belt. The body is supported elastically at both ends and these can swing independently one from another.

Dynamic transducers attached to each bearing pick up the vibration, converting this to a varying electric potential which, after amplification and filtering to remove unwanted effects such as bearing irregularities or floor vibrations, is measured and indicated upon a meter, the calibration of which may be adjusted to read in drilling depths or weights of materials to be added to effect compensation, it being necessary only to throw the switch marked "left"-"right" to take readings from either end of the rotor.

A brief specification of the instrument is as follows :—

Weight of workpiece to be balanced : 30 lbs.
Dimensions of workpiece to be balanced : 14 in. between bearings ; 11 in. dia.
Accuracy of balance in oz./in. : $\frac{\text{weight of rotor in oz.}}{50{,}000}$
Speed range : 1,000 to 2,000 r.p.m.
Power supply : 200/250 volts, 50 cycles/sec.
Dimensions : 19 in. by 22 in. by 15½ in. high.
Weight : 80 lbs.

Scophony Limited,
London Office : 100, Baker St., W.1.

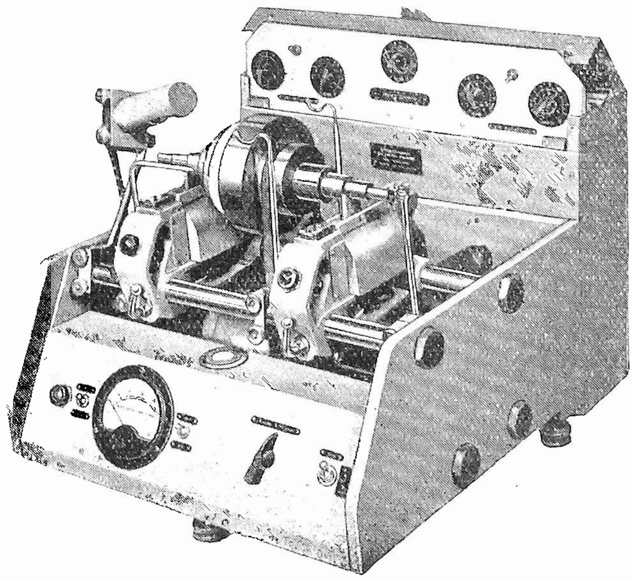

New C.R.T. for High-Speed Transients

THE Research Laboratories of the G.E.C. have recently developed a new type of cathode ray tube, Type 1608 ABCA, with a 6-inch blue screen for recording high speed transient phenomena and having a maximum writing speed of 20,000 Km/sec. Since the Type 1608 ABCA tube has been designed expressly for research work, only a limited number will be produced.

The tube has deflection plates and final anode brought out to separate side arms with low capacitance plates. In addition, there are three post-deflector accelerator bands, connexion to which is made by means of recessed contacts.

G.E.C., Magnet House,
Kingsway, W.C. 2.

A New Valve Voltmeter

A HIGH-GRADE A.C. mains-operated instrument for the measurement of A.C. voltages up to 150 Mc/s. and D.C. voltages either positive or negative to earth. The input capacitance on A.C. is 5.5 $\mu\mu$F. ; the input resistance on D.C. is 10 MΩ. Four ranges are provided for each, giving full-scale readings of 3-100 and 5-150 V. respectively. Separate scales are provided for each of the A.C. ranges. On D.C. the signal is fed to a two-valve balanced bridge D.C. amplifier, incorporating a high degree of negative feedback. The input grid resistance is nominally 10 MΩ but a press switch enables this to be open-circuited if required. On A.C. the signal is rectified by means of a diode housed in a probe connected to the main unit by a flexible cable, thus enabling the diode anode to be taken direct to the signal voltage point. This probe also contains the diode input capacitor and the necessary diode anode filter networks. The time constant of the diode load network allows a 98 per cent. pass at 20 c/s. A valve-operated overload relay is incorporated, operating at approximately 1.5 times full-scale voltage, so protecting the meter in the event of accidental overload ; operation of this overload device is indicated on the front panel by means of a pilot light. The H.T. supply is fully stabilized and variations of ± 25 V. on the power input voltage have no effect on the calibration accuracy or the zero setting.

J. Langham Thompson and Co.
Springland Laboratories,
Stanmore Hill, Middx.

Door Light

THE Varley door light has been designed for lighting cupboards, garages, etc., where mains lighting is not always conveniently available. It is provided with an automatic switch which can be operated by the opening of a door, and is constructed of aluminium alloy. Two standard U2 sized dry cells will last for a considerable period with intermittent use.

Oliver Pell Control, Ltd.,
Cambridge Row, Burrage Road, S.E.18.

New Totally Enclosed Chokes and Transformers

A NEW range of totally enclosed chokes and transformers, particularly suitable for use in industrial control gear, test apparatus and communications equipment. Protection is by impregnation and bitumen filling, maximum temperature rise is 35° C. (maximum ambient 65° C.) and regulation is better than 10 per cent. Where possible self-leads are taken directly from the windings and are securely attached to self-locking connecting lugs. Connexions are clearly marked on robust tag boards.

The Plessey Co. Ltd.,
Ilford, Essex.

Double-pole Toggle Switch

THE Bulgin Double-pole on-off all moulded Toggle Switch List No. S.377 illustrated has a maximum AC rating of 250 V. 6 amps. The Switch is of the two-hole fixing type and is suitable for a variety of panel thicknesses.

6 BA screw terminals are provided, and the switch, being completely insulated and of the double-pole Q.M.B. type complies with Overseas and Scandinavian requirements.

The retail price is 4s. 9d., with special terms for manufacturers.

Messrs. A. F. Bulgin and *Co. Ltd.*
Bye Pass Road, Barking, Essex.

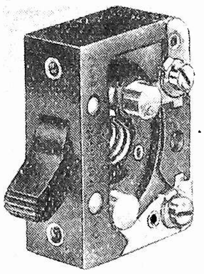

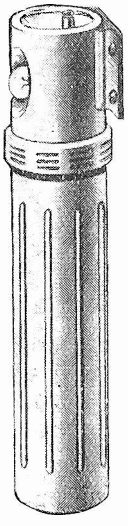

New High Stability Resistors

THE Erie Type 100 High Stability insulated resistors measure 1$\frac{3}{8}$ in. long by $\frac{11}{32}$ in. diameter, with wire ends projecting 1$\frac{1}{2}$ in. They are a development from the well-known carbon rod type and are completely sealed in a ceramic case. The characteristics are as follows:—

Rating: $\frac{1}{2}$W. at 70° C.
Max. Voltage: 500 D.C.
Max. Temp. Rise: 40° C. at full rating.
Temp. Coeff.: 0.05% per °C.

The resistors are made in all preferred values within 5 per cent from 10 ohms to 3 megohms, and will be followed by other high stability types in due course. Standard tolerances are available.

Erie Resistors Ltd.
The Hyde, Hendon, N.W.9.

Helical Potentiometers

A RANGE of helical potentiometers has recently been developed by P. X. Fox, Ltd., the photograph below shows an exhibition model in Perspex.

The resistance wire is wound round an enamelled copper wire mandrel, which is subsequently formed into a ten-turn helix, the helix being held in position by a split-moulding. Contact with the resistance element is made by a sprung roller fitted with insulated side flanges to guide the roller around the helix.

A prototype model of 1,000 ohms has recently been submitted to T.R.E., and promising results on linearity have been obtained. It is expected that in production, accuracy of linearity can be maintained to better than 0.1 per cent.

P. X. Fox, Ltd.
Hawksworth Road,
Horsforth, Yorkshire.

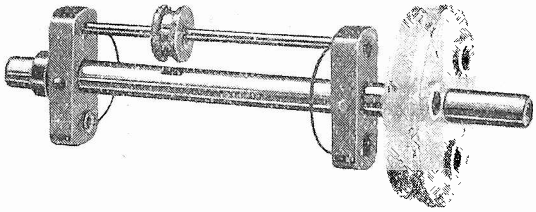

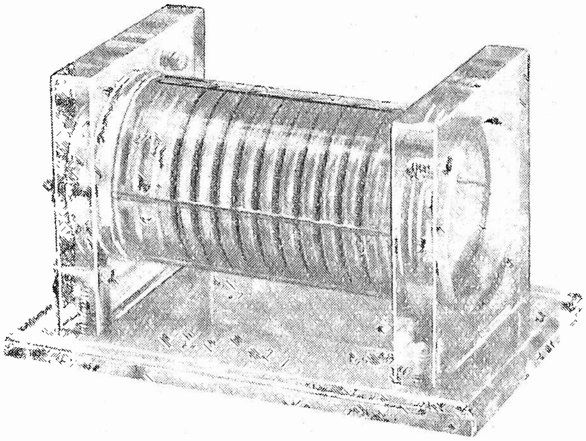

SIGMA

Introductions to Science

V. E. Cosslett

THE ELECTRON MICROSCOPE

"Contains one of the best general accounts of the technique used in electron microscopy yet published." .... *Discovery*

"A further triumph for the Sigma Press." .... *The Medical Officer.*

7s. 6d.

John G. Wilson

ABOUT COSMIC RAYS

"Well calculated to be a standard work on the subject for many years to come." .... *The Medical Officer.*

7s. 6d.

SIGMA BOOKS LTD.
7, JOHN STREET, W C.1.

THESE ARE IN STOCK

RADIO, TELEVISION AND ELECTRICAL REPAIRS, Edit. R. C. Norris. 10s. 6d. Postage 9d.

HYPERBOLIC FUNCTIONS, by C. A. Grover. 4s. Postage 2d.

RADAR PRIMER, by J. L. Hornung. 21s. Postage 6d.

FREQUENCY MODULATION, by K. R. Sturley. 2s. 6d. Postage 2d.

INEXPENSIVE TELEVISION FOR HOME CONSTRUCTOR, using War Surplus Equipment. 1s. 6d. Postage 2d.

WIRELESS SERVICING MANUAL, by W. T. Cocking. 10s. 6d. Postage 4d.

RADIO FUNDAMENTALS, by Arthur L. Albert. 27s. Postage 9d.

ELECTRONIC CIRCUITS AND TUBES, by Cruft Electronics Staff. 45s. Postage 9d.

RADIO TUBE VADE-MECUM, 1946 Edition, by P. H. Brans. 5s. Postage 6d.

HIGH-FREQUENCY MEASUREMENTS by A. Hund. 35s. Postage 8d.

VACUUM TUBE CIRCUITS, by Lawrence Baker, Arguimbau. 36s. Postage 9d.

USING EX-SERVICE RADIO APPARATUS by Thomasson. 2s. 6d. Postage 2d.

We have the finest stock of British and American radio books in the country. Complete list on application.

THE MODERN BOOK COMPANY
(Dept. E.3)
19-23, Praed Street, LONDON, W.2

BOOK

Technical Literature. Its Preparation and Presentation.

G. E. Williams (Allen & Unwin, 1948. 7s. 6d. net), 117 pp.

All of us cherish certain illusions; engineers and scientists that they know how to write about their own subjects. Of course, any fool can write! But can he? Mr. Williams, in this compact little book tells us about the art of technical writing from original conception of idea through draft and editing to final correction of proofs And art it certainly is; an art with a technique and "knowhow" as rigorous and exacting as other specialised branches of knowledge.

All readers and writers of technical literature cannot fail to profit from reading this book. Written by a man with many years experience and who is now head of the Editorial Department of I.E.E., it covers the whole gamut in small compass and is a first-rate text-book on the subject. Eminently readable and interesting as a volume to browse through, it is yet well arranged and sectionalised so as to be an invaluable guide to the writer and editor. A glance through its pages will soon convince the average reader (or writer) that there is literally more to this business of technical writing than meets the eye.

In particular, the author discusses the preparation of papers for the learned societies and professional institutions and stresses the high standards which are expected and maintained by them. He outlines the manifold processes through which a manuscript passes after it has left the author and explains the seemingly perverse and inexplicable alterations which sometimes have to be made. The trials of an editor's daily round are catalogued —in fact chapter six is a noteworthy introduction to the work of an editor— and the viewpoint of the printer and blockmaker is also touched upon. Other particular chapters cover the preparation of manuscripts, giving a code of practice which is an admirable composite of the leaflets already issued by various bodies, and the methods of reproduction of illustrations. Appendices discuss the psychological principles of writing and outline the formation of individual standards of editing. In all, the book covers a little of everything that needs to be known about technical writing and a well-arranged bibliography (or should it be a list of references, Mr. Williams?) directs attention elsewhere for more detailed study of individual aspects. The reviewer was, however, sorry to see omitted from the bibliography a work which has always been regarded as pre-eminent in its class, Howell's *Handbook of English in Engineering Usage*. It would be well worth including.

As might be expected from an author with Mr. Williams' background, the literary illustrations given in the book have a strong electrical and, at times, electronic flavour and this contributes to its readability and to the feeling given to the reader that this is just the book for him. Its clear straightforward style makes for confidence and is, in itself, proof that technical writing need not be uninteresting. Mr. Williams may set aside the qualms he suggests at the end of his preface, for this is a book both useful and timely and all those who can spare seven and six—and those too who can't—are advised to buy it.

E. D. Hart

Design of Crystal Vibrating Systems for Projectors and other Applications

By Fry, J. M. Taylor and B. M. Henvis. 182 pp. Published by Dover Publications, Inc., New York, price $3.50.

This publication presents a detailed study of crystal vibrating systems and design procedures essential to the design of projectors. A general set of curves based on fundamental piezo electric relations is given, and use of these curves reduces the computation rquired to a simple and straightforward method, which is adequate to cover any system composed of a piezoelectric material, in combination with any backing system and driving any medium. The performance of piezoelectric wave filters, blast gauges, and accelerometers can also be calculated by following the basic procedure given for projectors.

Part 1, which occupies some two-thirds of the book, contains the design curves with detailed explanations of their use. Particular systems using ADP and Rochelle salt crystals are discussed, and specific topics covered by the design procedure include resonant frequency, electrical input impedance, transmitting response, receiving sensitivity, and efficiency.

Part 2 contains the mathematical analysis and the derivations of the expressions used in constructing the curves.

Appendices contain units, definitions, symbols, conventions, and tables and graphs of various physical constants of piezoelectric and backing materials.

The work is the result of a project undertaken under the authorisation of the Sonar Design Section of the U.S. Bureau of Ships, and contains much valuable material released for the first time for general publication.

E. A. Dedman

REVIEWS

Radar Scanners and Radomes

Radiation Laboratory Series. 491 pp., 232 Figs. Vol. 26. McGraw Hill, 1948. Price 42s. net.

THE advance of technical science makes for a greater specialisation in books, not only with regard to their subject matter but with regard to their possible readers. Presumably the special subject forming the topic of this volume can only appeal professionally to a very minute section of the scientific public. Indeed, even in the limited field of electronics, the "radome engineer" must be a comparatively rare bird. Yet the reviewer, with a very general interest in electronics, found this book of absorbing interest. Perhaps it is because the text throws a bright light on American engineering practice, or perhaps it is because the authors and editors have succeeded in presenting their subject in a manner which must appeal to anyone interested in design. At any rate it is certainly true that at least one physicist read every chapter with instruction to himself and admiration for the writers and found on several occasions statements which made him think more highly than ever of current American engineering techniques.

The above must not be interpreted as meaning that the book is free from error and perfect in presentation. There are many instances of confused physical thought. It is startling, for example, to read on page 6 that "In a coaxial line, the inner conductor is usually supported by metal side arms soldered to the projections on the outer conductor" and the philosophy of "design specifications" suggested by the last paragraph of page 227 is not in tune with the advanced practice with which it is associated. But the book is stimulating and instructive and can be read with profit by anyone interested in any form of engineering design.

Part I is devoted to the consideration of Scanners. The electrical design is not discussed, since that is studied in other volumes, but a comprehensive account of the mechanics and electromechanics of feeds, mounts and stabilisers for ground, ship and aircraft antennae is given. One is again struck by the audacity of the American designs. To read of a ship-borne equipment the antenna of which weighs 3,000 lb. and which is said to be suitable for masthead mounting, causes a slight stirring of the hair on the sailor's scalp.

Part II, concerned with Radomes, makes interesting reading for either physicist or engineer. The problems of radome reflection and their treatment forms a chapter in applied research which deserves a wide audience, while the methods of fabrication in plastic materials are of considerable interest for many applications other than the electronic.

Throughout the book gems of information are scattered. To those who have not had the dubious pleasure of designing equipment to resist gun shock, it is perhaps interesting to have exact figures quoted for the accelerations to be encountered in typical cases. To those to whom a "tropical specification" is only a name, the effects of changes of temperature cited from time to time will be an education.

But it is the essential philosophy of the American engineer shining through the pages that gives the book its greatest value. Time and again a "good idea" is explained, only to be condemned utterly by the phrase "difficulties in fabrication resulting from the requirement of more complicated . . . have prevented widespread development." Unless the idea is applicable to quantity production, its value is very small.

There are very few errors or misprints. On line 20 of page 290 a letter from old German script appears to have crept in, while in the seventh line from the bottom of page 425, "to" should read "at." The description of Representative Scanner Servomechanisms on page 230 *et seq.* reads badly—almost as if target data only were being quoted, although this cannot be the intention.

J. THOMSON

The Practical Electricians Pocket Book, 1949

Electrical and Radio Trading. Odhams Press. Ltd., 6 Catherine Street, London, W.C.2. (4s. 6d. or 4s. 10d., including postage, from the above address.)

In view of the contribution electricity must make to greater industrial productivity, the 51st. edition of this pocket book gives special attention to motors, fluorescent lighting, portable tools and welding.

Electronic devices continue to invade industrial and commercial premises. Electricians will welcome new chapters on Intercoms (loudspeaking telephones) and on Interference Suppression, and also the section on Electronics in Industry.

Mains voltage tables, like numerous other sections in this volume, have been fully revised and now include Area Boards and addresses. A careful index is the final justification of the title word "practical."

LEWIS'S of Gower Street

invite inspection of their stock of books on all branches of

RADIO and ELECTRICAL ENGINEERING

CONTINENTAL and AMERICAN
Works can be obtained under Board of Trade Licence

Secondhand Department

140 Gower Street, W.C.1

A constantly changing large stock of scientific and technical literature on view.

Books sought for and reported free of charge

Large or small collections bought

LONDON: H. K. LEWIS & Co. Ltd.
136 GOWER STREET, W.C.1
Telephone : EUSton 4282
Established 1844

IMPORTANT BOOKS

TECHNIQUES IN EXPERIMENTAL ELECTRONICS

By C. H. BACHMAN

Demy 8vo. 252 pages, illustrated.
21s. net (postage 9d.)

INDUSTRIAL ELECTRONICS REFERENCE BOOK

By ELECTRONICS ENGINEERS of the WESTINGHOUSE ELECTRIC CORPORATION

Medium 4to. 680 pages profusely illustrated.

45s. net (Postage 10d.)

CHAPMAN & HALL, LTD.,
37-39 Essex Street, London, W.C.2

BOOK REVIEWS *(continued)*

Electronic Transformers and Circuits

Reuben Lee. 282 pp. 209 figs. (Chapman & Hall. 27s. 0d. net.)

TIME was when a transformer was a device used for obtaining a high voltage from a lower A.C. source. To-day, however, this is a very inadequate definition. Probably no other device of the same inherent simplicity is put to such a variety of widely different uses, or is manufactured in such a range of sizes, weights and ratings. In fact, as the author points out in his introduction, this seeming simplicity is a mirage. The design of many types of transformers used in electronic circuits to-day calls for the greatest technical skill and for knowledge entirely outside the scope of that applied by the power transformer designer. Such knowledge it is the intention of this book to impart.

In the words of the publishers, it is " a practical book containing the most useful data in the design of transformers for electronic apparatus and the effects of transformer characteristics in electronic circuits." The truth of this statement cannot be disputed. In its 282 pages, it contains over 80 graphs, charts and tables of value to the designer, ranging from wire tables and properties of core materials to data from which the performance of pulse transformers may be calculated in terms of their measurable properties. Of these, some are empirical, such as the graphs relating size, weight and rating of enclosed power frequency transformers, and curves of core temperature rise, but many are graphical representations of complex mathematical relations. The author has gone to considerable trouble with these, and by careful selection of parameters has succeeded in presenting a great mass of information in a minimum of space. Thus the attenuation of line matching transformers at high frequencies is expressed as a single family of curves which are easily translated, although it depends on the load resistance, the capacitance and leakage inductance of the transformer and, of course, the frequency.

After a short discussion of the general principles and practice of small transformer construction comes a description and data of rectifier circuits and capacitor-input filters, the design of their associated filament and anode transformers and a treatment of smoothing reactors. The fundamentals of electronic amplifiers are followed by frequency performance of amplifier transformers and design methods. Next comes wave filter data, modulation and driver transformers and a brief description of hybrid coils. A chapter on high frequency transformers discusses capacitance and its evaluation, air-cored transformers and R.F. chokes. Then comes a description of miscellaneous devices from grid-controlled thyratrons to peaking transformers, and the book concludes with an analysis of pulse and video transformers. Although many sections are based on the author's articles in various American journals, the continuity of the book does not suffer thereby.

The fly leaf supplies the information that the author is an advisory engineer to the Westinghouse Electric Corporation, but without this knowledge it is evident that he is first and foremost an engineer. A considerable proportion of the book is taken up with practical considerations, while the mathematics have been kept down to essentials. The choice of the technical level at which to commence and the amount of space to be devoted to summarised fundamentals is always very difficult, but in this case is rather inconsistent. Thus 13 pages are devoted to a treatment of fundamental electronic amplifier circuits, dealing with diode and triode operation, amplifier classification, valve characteristics and the construction of load lines, but the section on wave filters demands considerable previous acquaintance with them for it to be understood. Furthermore the treatment of fundamentals leaves the impression that to the author it was an unpleasant duty to be discharged as quickly as possible. It could only have been haste that caused the statement on page 8 that reactance and resistance voltage drops could be referred from one winding to the other in the ratio of the *square* of the turns. And to the unenlightened, the load line calculation for Class " C " amplifiers on page 115 would appear to be a straightforward but inexplicable reading of the valve characteristics; no explanation is vouchsafed that it is necessary to find the anode voltage swing by trial and error.

For these reasons, and because many of the statements are categorical, the book is not to be recommended to the student. But the practising engineer who deals with equipment in which transformers are used should find it a valuable investment, particularly because of its practical slant, often worth a library of theory. The specialist, even if he has nothing to learn from it, at least will have to look far to find so much useful and well-classified data in so small a space.

S. TWEEDY

The Electrolytic Capacitor

By A. M. Georgier. 191 pp., 71 Figs. (Crosby & Lockwood). Price 15s. net.

THIS is an up-to-date authoritative book on electrolytic capacitors, a subject which is of interest to all concerned in the radio industry, as well as to many other branches of electrical engineering.

The author has set out to make available all useful information relating to electrolytic capacitors, and to use his own words, " The main object of this book is to describe the construction, manufacture, function and testing of dry and wet electrolytic capacitors, to explain the operating characteristics of the various types and to indicate both their useful applications and their limitations."

This object the author has achieved most thoroughly, for he is to be congratulated, the treatment throughout being clear and lucid.

The early chapters deal with general information on capacitors, the difference between electrolytic and non-electrolytic types, the theoretical aspects of foil forming processes, together with details of electrolytes.

Further chapters then lead to production processes and methods, and here it may be mentioned that the accompanying illustrations leave nothing to be desired for clarity and detail.

Of particular interest too, are the chapters dealing with measurements and tests, since this information can be useful in determining the quality of doubtful capacitors, a problem which no doubt, the majority of engineers and servicemen have had to deal with at some time.

The book concludes with chapters on the design of capacitors, trends in development and finally, on uses and applications with an especially large section devoted to motor starter types.

There is also an excellent Glossary, and a very useful Bibliography.

The book can be recommended to all concerned with the use of electrolytic capacitors and particularly to designers of radio equipment, who may be assisted in many problems which they encounter, it will also be of use to radio engineers who may more readily understand the applications and limitations of the components they handle.

W. I. FLACK

NOTES FROM THE INDUSTRY

Telcon " Gee " (Anti-microphonic) Coaxial Cables

Parasitic voltages can arise in co-axial-cables carrying electrical signals of the order of .001 μA. Three cable types (1) P.T. 11. GM. (2) P.T. 1. GM. (3) K.16. GM. in which their substantial elimination is secured, have now been introduced by the *Telegraph Construction and Maintenance Co., Ltd., 22 Old Broad Street, London, E.C.2.*

International Guide to Applied Electronics

" Applied Electronics Annual," an international reference book on the practical applications of electronics is published by the British-Continental Trade Press Ltd., 222 Strand, London, W.C.2. It has a Directory section listing the world's manufacturers of electronic apparatus, wholesale distributors, suppliers of component parts and materials. The editorial part describes electronic apparatus in practical use in communications, industry, medical practice, navigation and entertainment.

Aerial Polar Diagrams

A report which will help the engineer in designing a radio communication service for maximum efficiency is published for the Dept. of Scientific and Industrial Research by H.M.S.O. " Radio Research Special Report No. 16—A note on the Polar Diagrams of Long Wire, Horizontal Rhombic Aerials " price 9d. (25 cents in U.S.A.) by post 10d., presents in a convenient form a generalised analytical method of calculating the polar diagram of any long wire aerial system over a wide band of frequencies. The analysis is also applied to the determination of the polar diagrams of horizontal rhombic aerials.

Audix Ltd., London Office

Messrs. Audix B. B. Ltd., announce that they have opened a London Sales Office at 116 Gloucester Place, W.1., (telephone WELbeck 9525). Their works are situated as before at Bishops Stortford (telephone Bishops Stortford 1394).

Hunt-Mycalex

A. H. Hunt Ltd., of Bendon Valley, Garratt Lane, Wandsworth, S.W.18, have in agreement with the Mycalex Company Ltd., of Ashcroft Road, Cirencester, Glos., taken over the world selling rights for the product now to be known as the " Hunt-Ingram " Capacitator. This was previously known on the market as the Mycalex Capacitator.

All inquiries for these capacitators should now be addressed to A. H. Hunt Limited, at the above address.

G.E.C. Research Laboratories Appointment

The General Electric Company, Ltd., of England, announces the appointment of Mr. O. W. Humphreys, B.Sc., F.Inst.P., A.M.I.E.E., as Manager of the Company's Research Laboratories at Wembley, Middlesex.

Mr. Humphreys joined the staff of the Laboratories in 1925, and during the war period was *inter alia* concerned with such specialised problems as the heating of guns on warships, to fit them for Arctic service, and the unique space heating problems arising in the " FIDO " installations for fog dispersal on aerodromes.

The scope of the activities of the Laboratories, which now employ a staff of over 1,300, has increased greatly. In the directing and co-ordination of these diverse activities Mr. Humphreys will be advised by a small Advisory Scientific Panel of his colleagues. Dr. B. P. Dudding, who joined the staff as a founder member with Sir Clifford Paterson in 1919, has been appointed Vice-Chairman of this Panel.

Mr. H. R. P. Beecham

Mr. Beecham has resigned his position as Sales Manager of Furzehill Laboratories and is now acting as an independent consultant for a number of electronic instrument manufacturers. His address is: 175A, Shenley Road, Boreham Wood, Herts.

Clix Change of Address

British Mechanical Productions, Ltd., announces that additional factory space is being made available at their No. 2 factory, Barton Hill Works, Bristol, 5, and that after February 28 all production will be transferred to Bristol from Wandsworth.

The accounts section is also being transferred, although payments will continue to be made from the London Office at 21 Bruton Street, W.1.

Radio Communication and the Upper Atmosphere

Radio Research Board Report

Sir Edward Appleton, G.B.E., K.C.B., F.R.S., and Dr. W. J. G. Beynon described, in a report recently published, the way in which knowledge, gained from vertical soundings of the upper atmosphere, may be applied to the solution of some practical radio-communication problems. The report is " Radio Research Special Report No. 18—The Application of Ionospheric Data to Radio Communication " published for the D.S.I.R. by H.M. Stationery Office, price 1s. (35 cents U.S.A.), by post 1s. 1d.

Research in Industry

" Research in Industry," published for the D.S.I.R. and the Board of Trade by H.M.S.O. price 1s. 6d. (by post 1s. 8d.). This book contains 19 articles recently published in the *Board of Trade Journal*, in each case written by an expert in the industry or subject concerned.

The article on electronics gives some details of what these devices are able to do for manufacturers. They can control machine tools, detect internal flaws and faults in metals, match colours, count and inspect finished products for size, surface finish, and weight. Almost any property of a product can be measured. There is wide scope for these devices in the protection of the worker from guillotines, presses, millers and so on. The application of electronics to industry is practically limitless.

Price Reduction in Geiger-Muller Tubes

Messrs. Cinema-Television of Worsley Bridge Road, London, S.E.26, announce that the price of their Geiger-Muller tubes has now been reduced to 30s.

The " Cintel " G-M tubes are made in various sizes, ranging from the smallest measuring 15 cms in length and 2 cms in diameter to the largest which is 75 cms long and 4 cms in diameter.

A special new type of low-temperature filling enables the tubes to be used at a temperature as low as −20° C without any reduction in efficiency.

Publications Received

" Picture Telegraphy." A twelve page brochure printed on art paper and measuring $16\frac{1}{2}$ in. by $11\frac{1}{4}$ in. giving excellent reproductions of pictures sent and received on their picture telegraph equipment, issued by *Muirhead and Co., Ltd., Beckenham, Kent.*

" Wiggin Electrical Handbook." A pocket size loose-leaf manual (Publication No.128) giving comprehensive technical data on the nature and properties of materials and on specific applications of alloys manufactured by *Henry Wiggin and Co., Ltd., Wiggin Street, Birmingham, 16.*

" An Eye on Temperature." Leaflet No. G.004A introducing a range of thermometers and pyrometers for measuring temperatures of minus 200°C. to 2000°C. and issued by *Elliott Bros., Ltd., Century Works, Lewisham, London, S.E.13.*

" Hunt's Capacitors " Service Trade Catalogue C262 of replacement capacitors for the radio and electrical service engineer from: *A. H. Hunt. Ltd., Bendon Valley, Garratt Lane, Wandsworth, London, S.W.18.*

MARCH MEETINGS

The Institution of Electrical Engineers

All meetings, unless otherwise specified, are held at the Institution of Electrical Engineers, Savoy Place, London, W.C.2.

Radio Section

Date: March 2. Time: 5.30 p.m.

Lecture: "The Analogies between the Vibrations of Elastic Membranes and the Electromagnetic Fields in Guides and Cavities."

By: E. C. Cherry, M.Sc.(Eng.).

Date: March 8. Time: 5.30 p.m.

Lecture: "The Development of Q-meter Methods of Impedance Measurement."

By: A. J. Biggs, Ph.D., B.Sc., and J. E. Houldin, Ph.D., B.Eng.

This is a joint meeting with the Measurements Section.

Date: March 15. Time: 5.30 p.m.

Discussion on: "The Planning of 'Business-Radio' Services at Very High Frequencies."

Opened by: D. H. Hughes.

The Secretary: The Institution of Electrical Engineers, Savoy Place, London, W.C.2.

East Midland Centre

Date: March 16. Time: 7.15 p.m.

Held at: The De Montfort Hall, Leicester.

Faraday Lecture: "Television."

By: Sir Noel Ashbridge, B.Sc.(Eng.), and H. Bishop, C.B.E., B.Sc.(Eng.).

Hon. Secretary: G. Smith, Loughborough College, Loughborough.

Cambridge Radio Group

Date: March 8. Time: 8.15 p.m.

Held at: The Cavendish Laboratory.

Lecture: "Electronic Calculating Machines."

By: Professor D. R. Hartree, Ph.D., M.A., M.Sc.

Date: March 29. Time: 6 p.m.

Held at: The Cambridge Technical College.

Informal Lecture: "Printed Circuits, including Miniature Components and Sub-Miniature Valves."

By: J. E. Rhys-Jones, M.B.E., and G. W. A. Dummer, M.B.E.

Hon. Secretary: G. E. Middleton, M.A., University Engineering Laboratory, Cambridge.

North-Eastern Radio and Measurement Group

Date: March 21. Time: 6.15 p.m.

Held at: King's College, Newcastle-on-Tyne.

Lecture: "Printed Circuits, including Miniature Components and Sub-Miniature Valves."

By: J. E. Rhys-Jones, M.B.E., and G. W. A. Dummer, M.B.E.

Hon. Secretary: G. A. Kysh, Carliol House, Newcastle-on-Tyne, 1.

South Midland Radio Group

Date: March 28. Time: 6 p.m.

Held at: The James Watt Memorial Institute, Great Charles Street, Birmingham.

Lecture: "Television Developments."

By: K. R. Sturley, Ph.D.

Hon. Secretary: E. May, B.Sc., Birmingham Electric Furnaces, Ltd., Tyburn Road, Birmingham, 24.

The Institute of Physics

Electronics Group

Date: March 8. Time: 5.30 p.m.

Held at: The Institute of Physics, 47 Belgrave Square, S.W.1.

Lecture: "Meteor Ionization."

By: Dr. A. C. B. Lovell, O.B.E., F.Inst.P.

Hon. Secretary: G. W. Warren, Research Laboratory, The G.E.C., Wembley, Middx.

The Brit. I.R.E.

London Section

Date: March 11. Time: 6 p.m.

Held at: The London School of Hygiene and Tropical Medicine, Keppel Street, London, W.C.1.

Lecture: "American Broadcasting."

By: J. H. Battison.

Date: March 17. Time: 6 p.m.

Held at: The London School of Hygiene and Tropical Medicine, Keppel Street, London, W.C.1.

Lecture: "The Design and Characteristics of Marine Radar Equipment."

By: Messrs. A. Levin, Haley and Davidson.

The Secretary: 9 Bedford Square, London, W.C.1.

South Midlands Section

Date: March 24. Time: 7 p.m.

Held at: The Technical College (Room A5), The Butts, Coventry.

Lecture: "Electronic Voltmeters."

By: R. A. Lampitt.

Secretary: C. Stokes, 6 Esterton Close, Coventry.

The Television Society

Midlands Centre

Date: March 28. Time: 6 p.m.

Held at: The James Watt Memorial Institute, York House, Gt. Charles Street, Birmingham.

Lecture: "The Sutton Coldfield Transmitter."

By: K. R. Sturley, Ph.D.

Lecture Secretary: Dr. W. Summer, 31 Beech Road, Bournville, Birmingham, 30.

This is a joint meeting with the local branch of the I.E.E.

Date: March 4. Time: 7 p.m.

Held at: Room 6, The Chamber of Commerce, New Street, Birmingham.

Lecture: "The Televisor, a home-built Television Receiver."

By: W. I. Flack.

Lecture Secretary: Dr. W. Summer, 31 Beech Road, Bournville, Birmingham, 30.

British Sound Recording Association

Date: March 25. Time: 7 p.m.

Held at: The Royal Society of Arts, John Adam Street, Adelphi, Strand, W.C.2.

Lecture: "Design of a Cutter head for Disk Recording."

By: D.O'C Roe, B.Sc.

Hon. Secretary: R. W. Lowden, "Wayford," Napoleon Avenue, Farnborough, Hants.

The Institution of Post Office Electrical Engineers

Date: March 14. Time: 5 p.m.

Held at: The Institution of Electrical Engineers, Savoy Place, London, W.C.2.

Lecture: "Introduction of Automatic Switching to the Inland Teleprinter Network."

By: H. E. Wilcockson, A.M.I.E.E., and C. W. A. Mitchell, A.M.I.E.E.

Local Secretary: W. H. Fox, Engineer-in-Chief's Office, (T.P. Branch), Alder House, E.C.1.

R.S.G.B.

Date: March 25. Time: 6.30 p.m.

Held at: The Institution of Electrical Engineers, Savoy Place, London, W.C.2.

Lecture: "Technical Publishing."

By: G. Parr, M.I.E.E.

The Secretary: New Ruskin House, Little Russell Street, London, W.C.1.

Institution of Electronics

N.W. Section

Date: March 23. Time: 6.30 p.m.

Held at: The Reynolds Hall, College of Technology, Manchester.

Lecture: "Photo Electric Multipliers."

By: S. Rodda, B.Sc., F.Inst.P.

Secretary: L. F. Berry, 105 Birch Avenue, Chadderton, Lancs.

The Society of Instrument Technology

Date: March 29. Time: 7 p.m.

Held at: The Royal Society of Tropical Medicine & Hygiene, Manson House, Portland Place, W.1.

Lecture: "Modern Permanent Magnets for Instruments."

By: D. A. Oliver and H. Hadfield.

Hon. Secretary: L. B. Lambert, 56 Tudor Gardens, London, W.3.

Institution of Electronics

Midlands Branch

Date: March 18. Time: 7 p.m.

Held at: Room 7, The Chamber of Commerce, New Street, Birmingham.

Lecture: "Industrial Application of Luminescent Materials."

By: Dr. G. F. J. Garlick.

Lecture Secretary: Dr. W. Summer, 31 Beech Road, Bournville, Birmingham, 30.

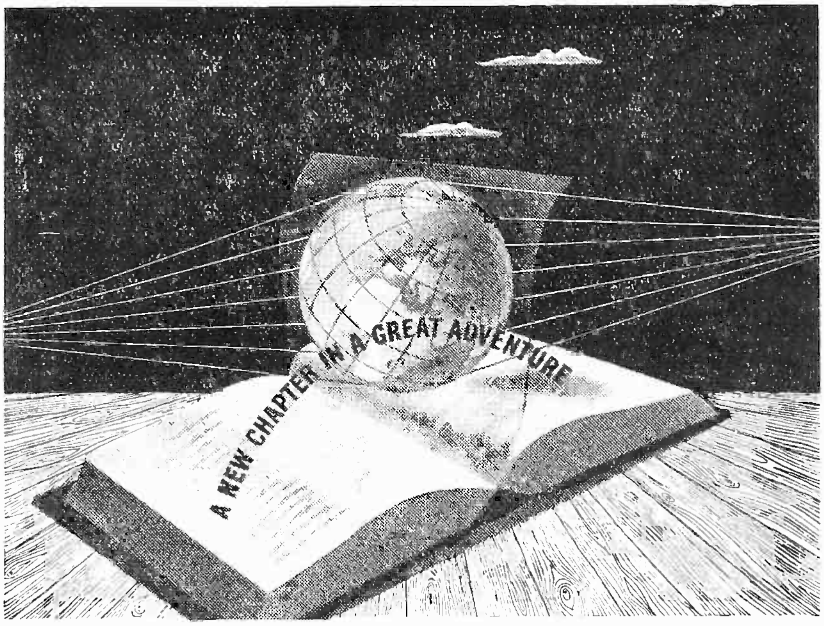

From the first great adventure of wireless communication half a century ago, the story of Marconi has been one of successive achievement. Wireless telegraphy, wireless telephony, broadcasting, television, radar, wireless navigational aids at sea, on land, and in the air — Marconi's have played a pioneer part in their development. With a vast accumulation of knowledge and experience behind them, Marconi's are now engaged on new developments which will more than maintain their shining reputation.

Marconi THE GREATEST NAME IN WIRELESS

MARCONI'S WIRELESS TELEGRAPH COMPANY LIMITED, MARCONI HOUSE, CHELMSFORD, ESSEX

MINIATURE VITREOUS ENAMELLED RESISTOR

TYPE MVS

RATING. - 3 watts for 250°C rise.

RESISTANCE RANGE. - 1 - 4700 ohms.

DIMENSIONS. - 15/32″ × 13/64″.

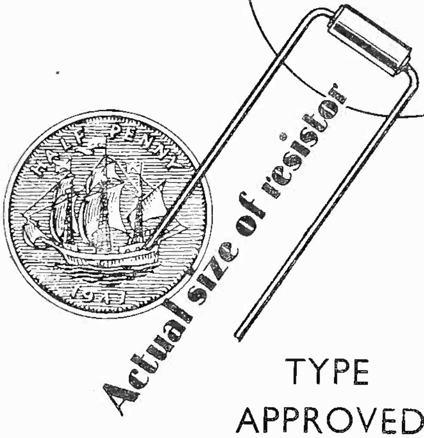

TYPE APPROVED

PAINTON of NORTHAMPTON

KINGSTHORPE, NORTHAMPTON.

...the Paragon of Instrument Virtues

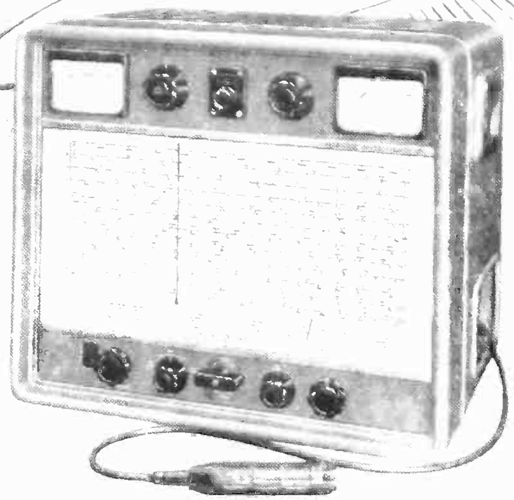

Type TF867 excels even the best of previous Marconi SIGNAL GENERATORS. Its virtues are impressive both mechanically and electrically, for design and performance are alike superlative.

The expanding wide view scale is a unique innovation. So, too, is the concentric terminating unit which serves as dummy aerial, provides source impedances of 75Ω and 13Ω and shows diagrammatically the exact conditions of circuit. Prominent among other features are freedom from unwanted frequency modulation, crystal standardisation, deep-amplitude or carrier shift modulation and stabilised output level. Over the range 15 Kc/s to 30 Mc/s, output is continuously variable from 0.4 μV to 4V; calibration indicates true artificial signal e.m.f. irrespective of load. Full technical information is freely available.

SIGNAL GENERATOR

Type TF 867

MARCONI INSTRUMENTS LIMITED

ST. ALBANS, HERTFORDSHIRE · Telephone: St. Albans 6161/5

Northern Office: **30 Albion Street, Hull.** Western Office: **10 Portview Road, Avonmouth.** Midland Office: **19, The Parade, Leamington Spa.** Southern Office & Showrooms: **109 Eaton Square, London, S.W.1.**

WODEN

QUALITY COMPONENTS SPECIFIED FOR

"ELECTRONIC ENGINEERING" HOME BUILT TELEVISOR

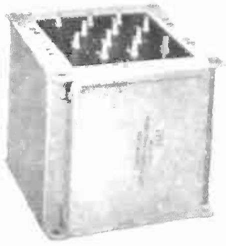

		s	d
E.H.T. TRANSFORMER, POTTED TYPE			
4 KV. 5 mA. 0-2-4V 1.5A.	Price	65	0
MAINS TRANSFORMER, POTTED TYPE			
350V-0-350V 250 mA. 6,3V 6A. 4V 8A. 4V 3A. 0-2-6.3V 2A.	Price	98	6
SMOOTHING CHOKES			
5 Hy. 250 mA.	Price	29	0
10 Hy. 80 mA. ...	Price	17	0

We also manufacture transformers from **10VA** to **100KVA** for all types of Electronic Equipment. We are pleased to co-operate on any special designs required, and we already supply many prominent manufacturers.

The Transformer shown is typical of our larger types. Rated at 6,000V 30KVA, it is designed for R.F. Heating Equipment.

Send for latest Catalogue to:

WODEN TRANSFORMER CO LTD

MOXLEY ROAD · BILSTON · STAFFS

TEL: BILSTON 41959

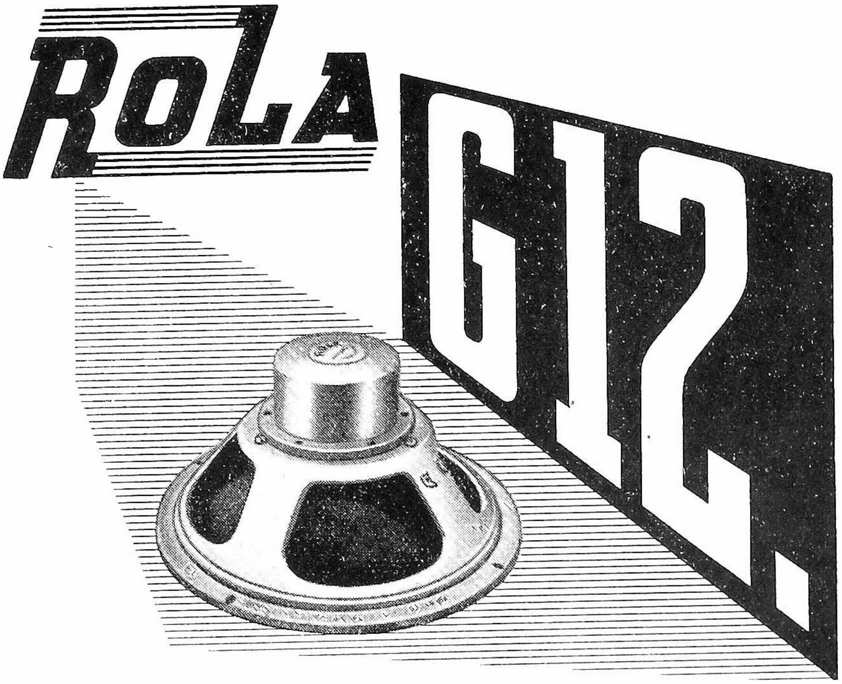

Maximum sensitivity with uniform frequency response from a more compact speaker, appreciably reduced in weight—that is what Rola technicians have achieved with the new G.12. Special features include dust-proof suspension completely protecting coil and magnet gap and the powerful Alcomax II magnet. Write for details and also for particulars of Rola 3″ and 4″ P.M. models, dust-proofed and equipped with Alcomax II magnets.

best of the BIG speakers

BRITISH ROLA LTD., FERRY WORKS, SUMMER RD., THAMES DITTON, SURREY
Telephone: EMBerbrook 3402 (5 lines)

THE OSCILLOSCOPE FOR EVERY INDUSTRIAL PURPOSE.

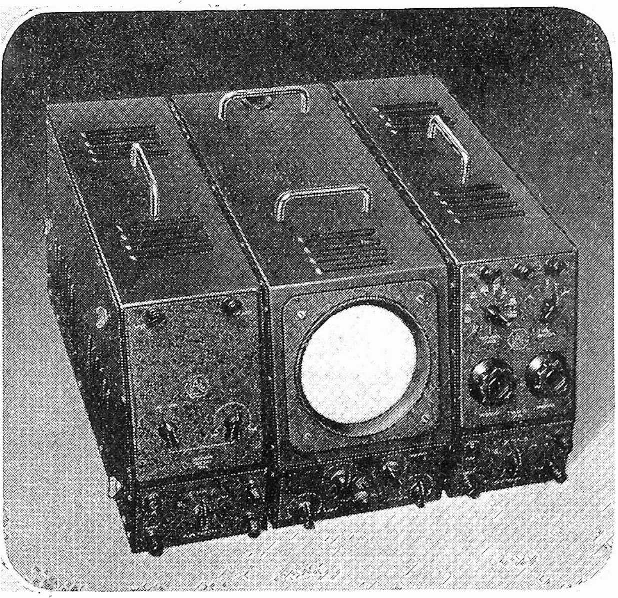

Also available:—
D.C. Amplifiers, medium and high gain. Extra low frequency time base. Circular or spiral heptode time base. Voltage calibrator.

LAL UNIT *Oscilloscope*

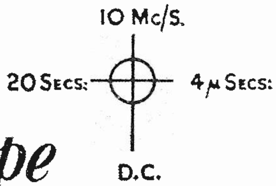

EVERY Oscilloscope requirement for Industrial Research or Production can be satisfied by the comprehensive range of UNIT Amplifiers and Time Bases. All instruments are immediately interchangeable without loose wires or the use of tools and many can be used independently of the Oscilloscope. Full details will be sent by return of post.

LAL Lydiate Ash
LABORATORIES
LYDIATE ASH · NEAR BROMSGROVE · WORCS.

DYNATRON
CABINET RACKS

DYNATRON offer a range of handsome cabinet racks with fixing centres and widths to Post Office specifications to house Sound Amplifiers (also made by DYNATRON), all electronic panel mounted equipment, transmitter units and all forms of radio apparatus. The cabinet completely encloses and protects the equipment.

For several years they have been standard equipment in Government Radio and Radar Research Establishments throughout the country.

Chief Features

- * Standard panel width of 19 in. and offered in three heights of 3 ft., 4 ft. and 6 ft.
- * Fixing centres multiples and half multiples of $1\frac{3}{4}$ in. centres.
- * Runner bars and shelves adjustable.
- * Earthing busbar and cable entries provided.
- * Mobile Unit available as extra.
- * Blank panels available.
- * Standard finish Grey Tint 32 and chrome fittings.
- * Provides complete protection to the user and enhances the appearance of any installation.
- * Specially suitable for Export, can be quickly dismantled for flat packing.

Fuller details and prices gladly furnished.

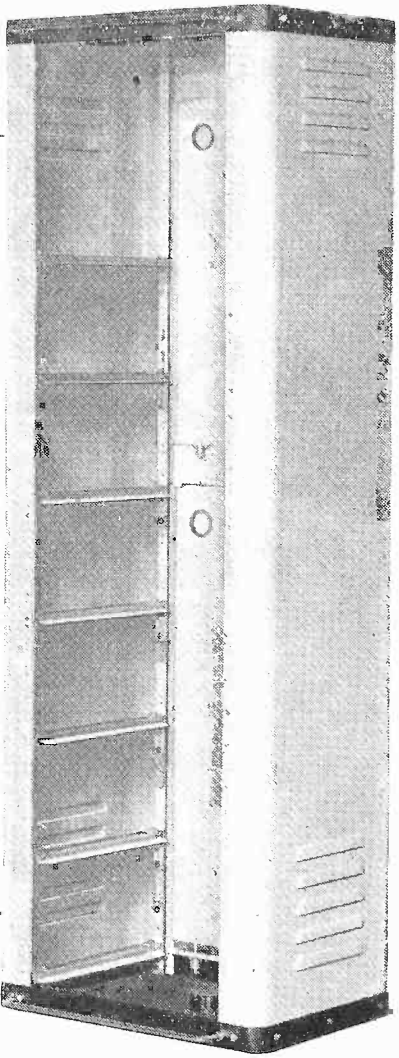

Manufactured by

DYNATRON RADIO LIMITED
Perfecta Works — Ray Lea Road, Maidenhead, Berks.
Tel.: Maidenhead 1211 and 392

DYNATRON also manufacture rack mounted Sound Amplifiers, Television Receivers, specialised Electronic Equipment and, of course, the superb DYNATRON range of Radiogramophones.

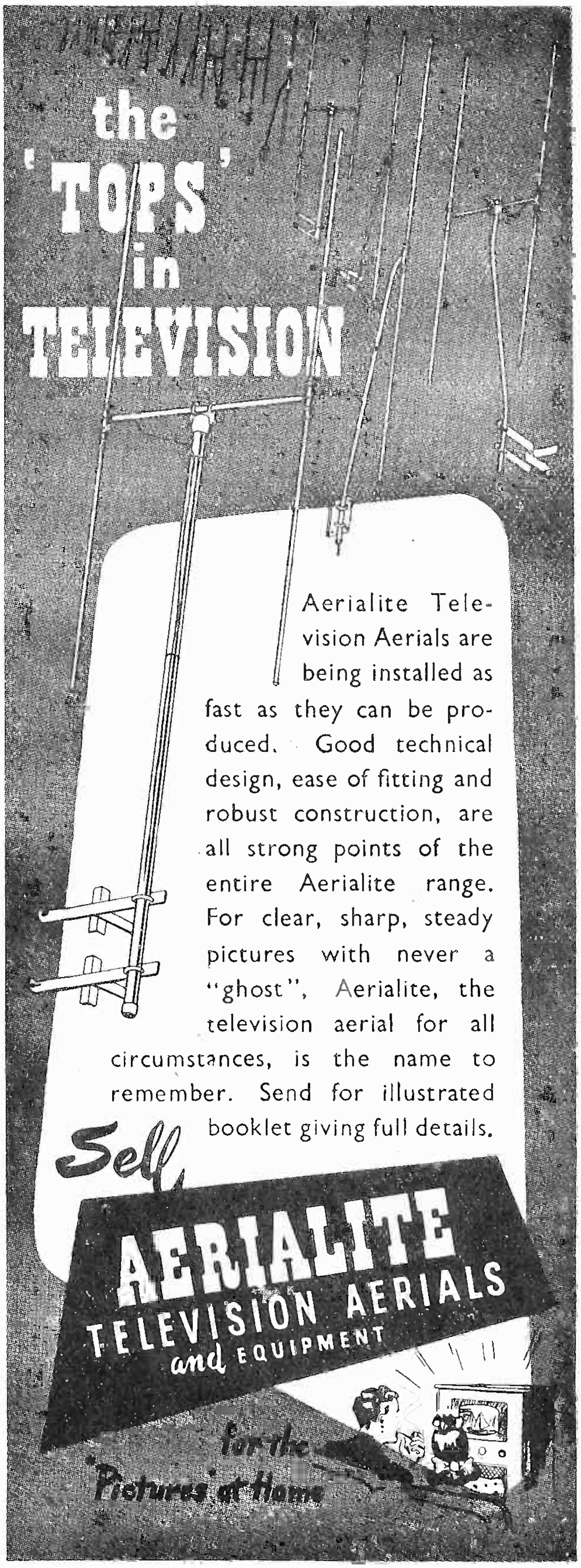

Aerialite Television Aerials are being installed as fast as they can be produced. Good technical design, ease of fitting and robust construction, are all strong points of the entire Aerialite range. For clear, sharp, steady pictures with never a "ghost", Aerialite, the television aerial for all circumstances, is the name to remember. Send for illustrated booklet giving full details.

Made by AERIALITE LTD., STALYBRIDGE, CHESHIRE

THE CONDUCTOR SHOULDN'T KEEP THE DESTINATION secret

Especially a Copper Conductor—but these pleasantries are intended to amuse, not to confuse. Our concern is with the uniforms of the conductors who ply their routes from terminal point to terminal point in Radio, Television and Electronic Circuits.

Their "Ready-to-wears" are best contrived in DELAFLEX Insulating Sleevings. A range of plain and multiple colours enables the most intricate coding systems to be used. Available in Varnished Cotton, Varnished Art. Silk (Rayon) and Rolled Silk. Optional Metal Screening. Diameters from 0.5 mm. Samples and full details supplied gladly on request.

DELAFLEX insulated sleevings

DE LA RUE INSULATION LIMITED
Imperial House, 84/86 Regent Street, London, W.1
Telephone: Regent 2801
Telegrams: Delinsul, Piccy, London

D.A.29

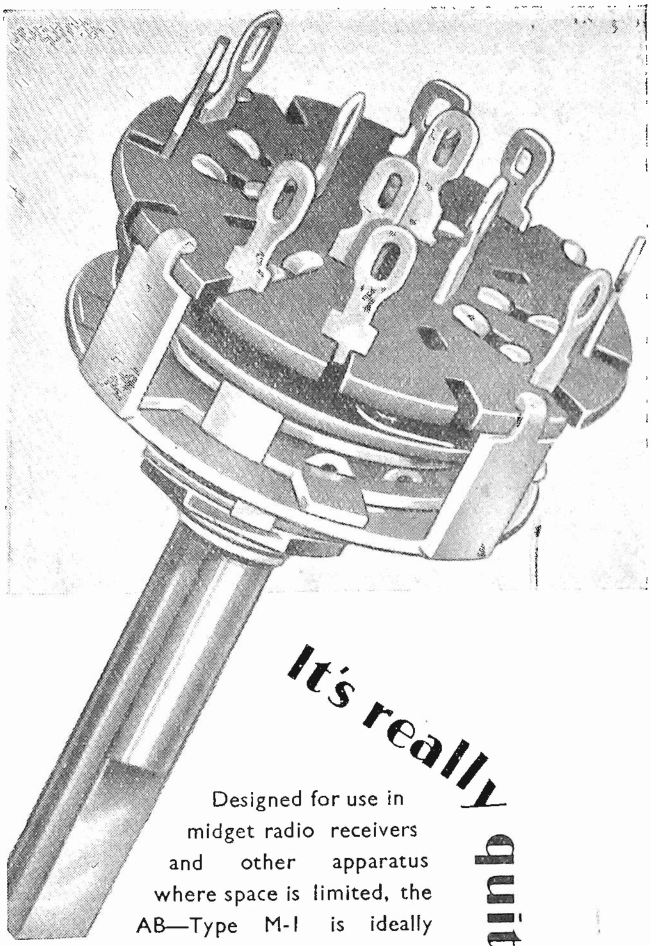

It's really quite tiny

Designed for use in midget radio receivers and other apparatus where space is limited, the AB—Type M-1 is ideally suitable for such tasks as wave-band and meter switching, etc. Small though it is, features such as heavily silver-plated brass stator contacts and rotor contacts of a special alloy, also heavily silver-plated, combine to give very low contact resistance, noiseless operation and long life.

Available in all popular switching combinations.

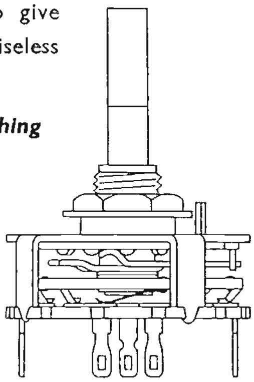

TYPE M-1 MINIATURE ROTARY SWITCH

AB Metal Products Ltd., Great South-West Road, Feltham, Middlesex
Hounslow 6256 Feltham 2865

"OAK" WAFER SWITCHES, (Patent Nos. 47891 and 47892) SINGLE OR MULTI-BANK TOGGLE SWITCHES FOR ALL PURPOSES • PUSH-PULL SWITCHES • ROTARY SWITCHES

London Office: Ludgate House, 107, Fleet Street, E.C.4.
Telephone: CENtral 5667/8.

CONTROL and PROTECTION of VACUUM PLANT

TYPE V.S.1. VACUUM SWITCH illustrated is a simple and compact vacuum accessory serving as :—

(a) A safety switch to prevent shock from High Tension equipment when vacuum apparatus is opened ;

(b) A control device for low pressure systems where electrical circuits (2 to 10 amps. at 600 to 100 volts) are required to be automatically switched at pre-set gas pressures between 15 and 500 mm.

The VACUUM SWITCH
Type V.S.1.

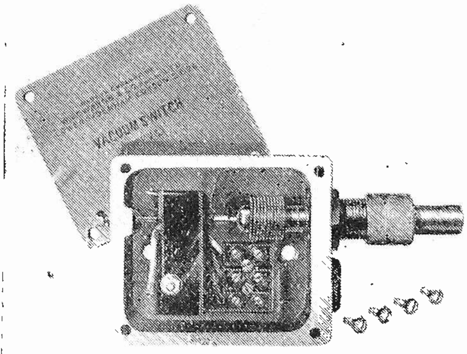

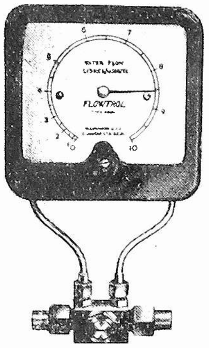

The "FLOWTROL"
Combined Flowmeter and Flowswitch

The "FLOWTROL" Combined Flowmeter and Flowswitch. Designed for the protection of water-cooled equipment, this instrument (a true flow switch and not a simple pressure switch) can be used with other liquids for control switching (2 to 10 amps. at 600 to 125 volts) at selected maximum and minimum flows.
Both orifice and switching units can be mounted in any position, the latter being conveniently panel mounted.

W. EDWARDS & CO, (London) LTD.
LOWER SYDENHAM, LONDON, S.E.26
Telephone : SYDenham 7026 (5 lines)
Telegrams : EDCOHIVAC, Phone London

The 'CINTEL'

UNIVERSAL OSCILLOSCOPE

A highly versatile laboratory instrument of outstanding performance

Designed on the unit principle the 'Cintel' Universal Oscilloscope offers a basic instrument which is expandable at will to meet your requirements. Units now available include :

- Basic unit, comprising console, Cathode Ray Tube and power pack and calibration device.
- Simple Time Base with frequency range from 5c/s to 200 Kc/s.
- Amplitude Stabilised Time Base with calibrated frequency range from 5c/s to 150 Kc/s.
- A.C. Amplifier with frequency range from 5c/s to 1.5 Mc/s.
- D.C. Amplifier with frequency range from oc/s to 5 Mc/s.
- Double Beam Switch Unit.
- Five Beam Switch Unit.

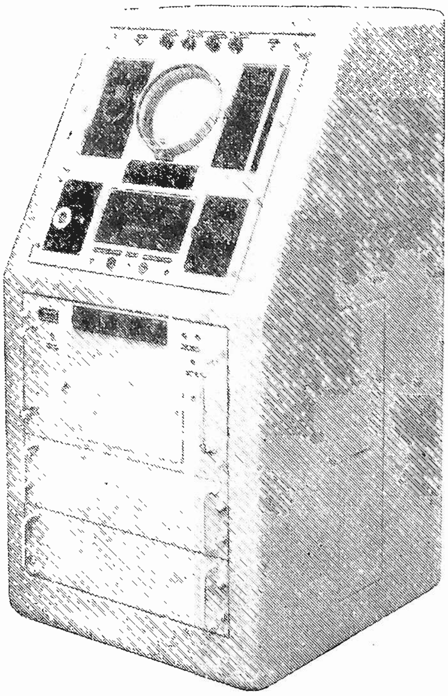

CINTEL
REGISTERED TRADE MARK

CINEMA - TELEVISION Ltd.
WORSLEY BRIDGE ROAD,
LONDON, S.E.26
Telephone : HIIher Green 4600
Manufacturers of Scientific Instruments and Photo-electric Cells

THE BALDWIN

FARMER

ELECTROMETER

FOR RADIOLOGICAL WORK

A unique electronic instrument for research and routine testing in Hospital Radium and X-ray Therapy Departments.

It has an input impedance of 10^{16} ohms, and an input capacitance of less than $1\mu\mu F$. Developed primarily for use in Radiological work, where small ionization chambers are used extensively for the measurement of gamma and X-ray intensities.

Fully descriptive leaflet supplied on request.

* VOLTAGE RANGES
0-50 0-100 0-250

BALDWIN INSTRUMENT COMPANY LIMITED
BROOKLANDS WORKS, PRINCES ROAD, DARTFORD, KENT
Telephone: Dartford 2989

A portable oscillator of outstanding merit

The type L.O.50 Beat Frequency Oscillator is essentially portable.

Range: 0—16,000 c./s. *Output:* 0.5 watts. When loaded with 600 ohms it will deliver 15 volts at all frequencies down to 20 c./s. across the output terminals. Total harmonic distortion: Less than 1% at full output. *Calibration accuracy:* 1% or 2 cycles, whichever is greater. Individually hand calibrated machine faced dials and built-in 0—20 volts precision rectifier output meter.

This instrument is fully tropicalised and has a high frequency stability.

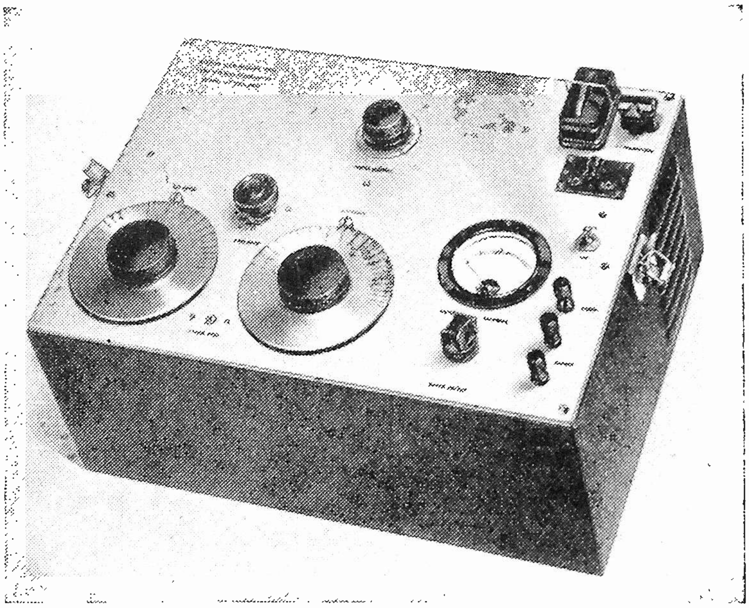

BRITISH BSR THROUGHOUT

BIRMINGHAM SOUND REPRODUCERS LTD.
Claremont Works, Old Hill, Staffs. Phone: Cradley Heath 6212-3
LONDON AND SOUTHERN AGENTS:
N. Miers & Co. Ltd., 115, Gower Street, London, W.C. 1.
Telephone: Euston 7515

Webb's RADIO

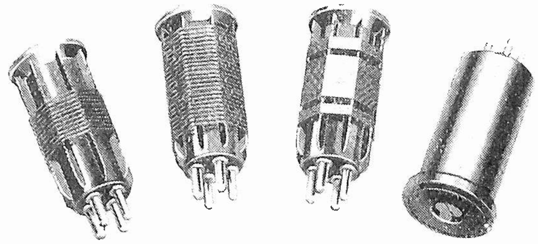

NEW EDDYSTONE MINIATURE INTERCHANGEABLE COILS

These new miniature high-efficiency 4-pin inductances fulfil many applications where separate coils are preferable to switched devices. Small size restricts the field and facilitates compact design. Diameter, ¾ in.; overall length (including pins), 2 in. The three high frequency ranges use ribbed formers, while types WHITE, PINK, GREEN and BROWN have an adjustable dust-iron core, the winding protected by a shield. All coils have three windings.

706/LB	Blue, 33-15 Mc/s. ...	4/3
706/Y	Yellow, 16-6.7 Mc/s.	4/3
706/R	Red, 7.5-3.1 Mc/s....	4/3
706/W	White, 3.3-1.35 Mc/s.	5/3
706 P	Pink. 1.4 Mc/s.-720 Kc/s.	5/3
706/G	Green, 750-300 Kc/s.	5/3
706/BR	Brown, 370-150 Kc/s.	5/3
707	4-pin Base ...	1/9

Tuning range with 140 pF (max.) Variable Capacitor.

EDDYSTONE SPLIT-STATOR TRANSMITTING CAPACITORS

No. 611. 25+25pF, fitted with neutralizing capacitor 27/6

No. 612. 50+50pF (without neutralizing capacitor) 25/0

No. 614. 100+100pF (without neutralizing capacitor) 29/0

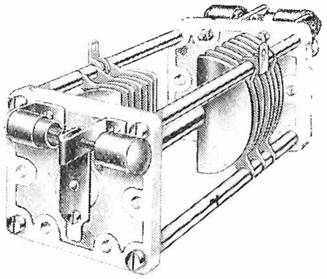

No. 611 (spacing 0.08")

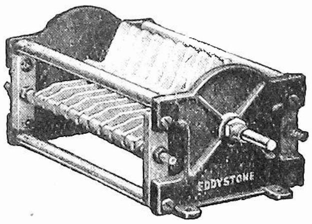

No. 137 (spacing 0·068)"

No. 137. Robust construction, silver-plated vanes rounded and polished. Capacitance, 60+60pF 32/0

★ *We are demonstrating the new Eddystone Model "680" High-performance Communications Receiver, price £85. May we send you details?*

Webb's Radio, 14, Soho St., Oxford St., London, W.1

Phone: GERrard 2089. Shop Hours: 9 a.m.—5.30 p.m. Sats. 9 a.m.—1 p.m.

EEL **PHOTOELECTRIC EQUIPMENT**

THE N.C.B. PHOTOMETER

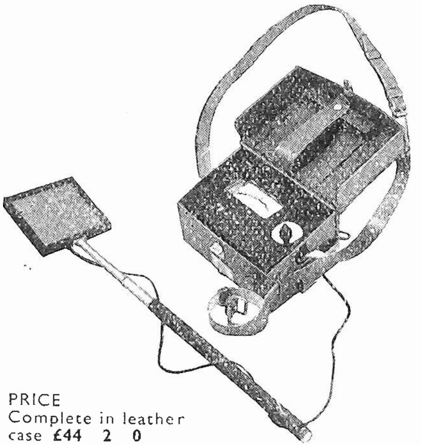

This photometer has been designed in co-operation with the National Coal Board and provides a robust, accurate instrument to measure the extremely low light intensities encountered at the coal face, but has, of course, many applications where low light readings are required. Calibrated for readings of 0—2, 0—10, and 0—50 foot candles, or lower if desired.

For general purposes, the "EEL" GP Photometer will prove a highly accurate and efficient instrument for measuring the higher light levels.

PRICE
Complete in leather case £44 2 0
Purchase Tax on case 22/-.

Full particulars of these photoelectric devices will be sent with pleasure.

EVANS ELECTROSELENIUM LTD.,
Harlow Essex

LAMINATIONS

FOR

ALL RADIO AND ELECTRICAL USES.

IN SILICON, DYNAMO, INTERMEDIATE AND TRANSFORMER QUALITIES.

PERMALLOY, MUMETAL, RADIOMETAL.

SCREENS FOR ALL ELECTRICAL USES.

TRANSFORMER SHROUDS FOR 35 AND 74 LAMS.

GENERAL PRECISION ENGINEERS.

SHERADISING TO THE TRADE.

ELECTRICAL SOUND & TELEVISION PATENTS LTD.
12 PEMBROKE STREET, LONDON, N.1. — TERminus 4355
2/4 MANOR WAY, BOREHAM WOOD, HERTS — ELStree 2138

MAGSLIPS and SELSYNS

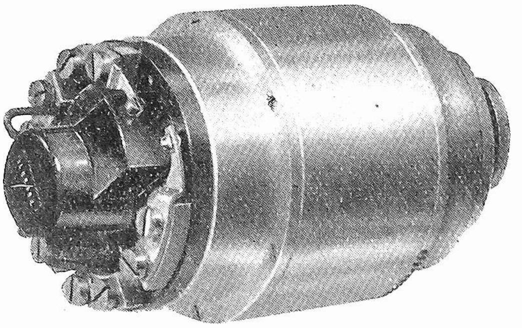

Most types in stock inc'uding :
TRANSMITTERS
RECEIVERS
RESOLVERS, etc.,
at approximately 12½% of List Prices
Selsyns with torque up to 45 lbs/inch.
Catalogue and technical details on request

HOPTON RADIO
1, Hopton Parade,
Streatham High Road,
LONDON, S.W.16
STReatham 6165

"COLVERN"

Wire Wound

Potentiometers and Variable Resistors—Fully Type Approved to Government Inter-Service Specification RCS/121.
High Accuracy Precision Potentiometers.

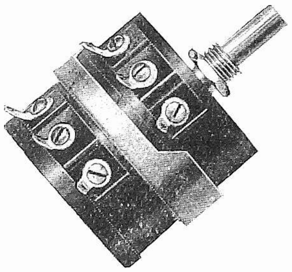

VISIT US AT
STAND 55
RADIO COMPONENTS EXHIBITION
Grosvenor House,
MARCH 1-3rd

COLVERN LIMITED
Mawneys Road, Romford, Essex.
Telephone : Romford 2020/4880/4881

BRITAIN'S LARGEST MANUFACTURERS OF WIRE WOUND POTENTIOMETERS

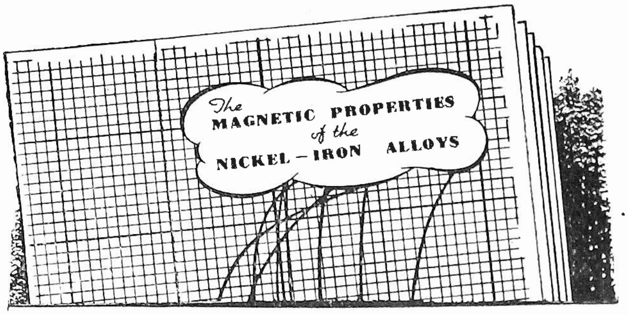

OF INTEREST TO ALL
Electrical
and Wireless Engineers

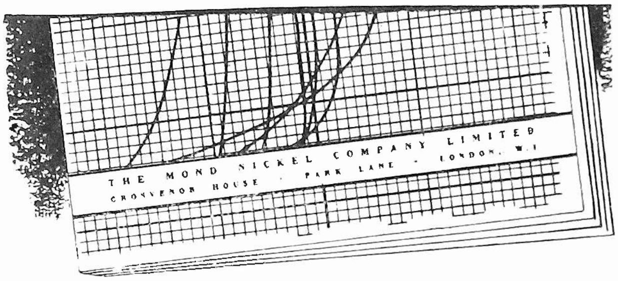

THIS BOOK dealing with the magnetic properties of the nickel-iron alloys will be sent free on request. It contains information on:

1. **NON-MAGNETIC AND WEAKLY-MAGNETIC ALLOYS**
Non-magnetic ferrous engineering materials—Temperature compensation alloys.

2. **HIGH PERMEABILITY NICKEL-IRON ALLOYS**
General and historical—Early uses: cable loading—Further development: transformers, screens, dust-cores, etc., radar, specialized alloys.

3. **MAGNETOSTRICTION**
General–Echo sounding–Frequency control.

4. **PERMANENT MAGNETS**
Development : Alni, Alnico, Alcomax—Properties—Sintered magnets—Applications—Ductile alloys.

Application should be made to:

THE MOND NICKEL COMPANY LIMITED
Grosvenor House, Park Lane,
London, W.1

TELE-RADIO (1943) LTD.

177, EDGWARE ROAD, PADDINGTON, W.2.

Telephone: PADdington 6116 PADdington 5606 AMBassador 5393

SPECIFIED COMPONENTS FOR THE ELECTRONIC ENGINEERING TELEVISOR

AS APPROVED BY THE DESIGNERS

	£	s.	d.
Complete chassis assembly with all screens and gantries. Valve holder holes punched out	2	17	6
or			
As above with all valve holders fitted, three-pin plugs and sockets. Single sockets	4	13	9
Scanco Scanning Coils	1	5	6
Scanco Focus Coils	1	10	0
Scanco Line Output Transformer	1	5	6
Complete set of Colvern Wire-wound Potentiometers ...	2	0	9
Belling & Lee Television Aerials :			
Indoor Dipole	2	7	6
Dipole Wall Fixing	2	7	6
Dipole Pole Fixing	3	19	3
Dipole and Reflector	6	6	0
Woden Mains Transformer	4	18	6
Woden E.H.T. Transformer, 4 KV, with 2 and 4-volt Heaters	3	5	0
Woden 5H/250 mA. Choke	1	9	0
Woden 10H/80 mA. Choke		17	0
Individual Chassis Complete with Valve Holders, Screens, etc. :			
Vision Chassis	1	2	6
Sound Chassis		18	9
Time Base Chassis		17	6
Power Pack Chassis	1	5	0

	£	s.	d.
Gantries, Control Panels, etc.		10	0
Cathode Ray Tube GEC6501, 9-in.	11	6	9
Cathode Ray Tube Masks :			
Black, 9-in.		9	6
White, 9-in.		11	3
Black, 12-in.		18	0
White, 12-in.	1	1	6
Mullard EF50 Valves	1	1	4
or			
EF50 Tested (ex-WD)		5	0
Mullard EA50		12	10
or			
EA50 (ex-WD)		5	0
Mullard EBC33		11	7
Mazda T41		12	10
Mazda PEN46		18	3
Mazda PEN45		12	10
High Voltage Rectifier, Mazda U22		18	3
Mullard HVR2, 6 KV. 4V.	1	4	4
Mazda UU8		18	3
Mullard EL33		12	10

All specified T.C.C. Condensers available from stock at list prices.

All specified Resistances available from stock at list prices. Aladdin Coil Formers, complete with iron cores ... ... **10d.** each

SEND FOR COMPLETE PRICE LIST FOR THE ABOVE TELEVISOR, ALSO 1949 CATALOGUE, AVAILABLE 9d. POST FREE.

NEW DESIGNS in the range of U.I.C High Stability CAPACITORS

1 LEAD-THROUGH "HI-LOAD" CAPACITOR

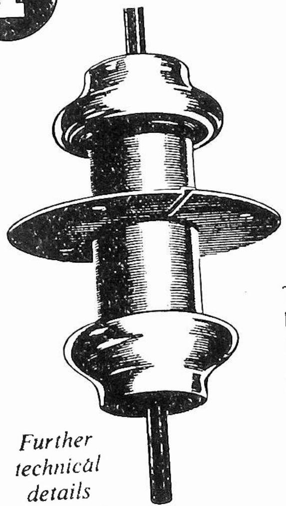

Further technical details furnished on request

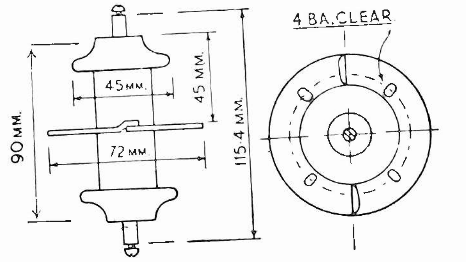

This new Ceramic "Hi-Load" Capacitor has been specially designed as H.T. or Heater By-Pass and Lead-Through Capacitor. Although very small in dimensions the capacitor has a capacitance of 1,000 pF and it is rated at 40 KVA R.F. with a maximum R.F. current of 20 amps. The sturdy rod forming the lead-through connection is capable of handling all normal currents. The high rating also makes the capacitor suitable as a tank capacitor.

UNITED INSULATOR CO. LTD. OAKCROFT RD. TOLWORTH SURBITON SURREY

Telephone : Elmbridge 5241 (6 lines) *Telegrams :* Calanel, Surbiton

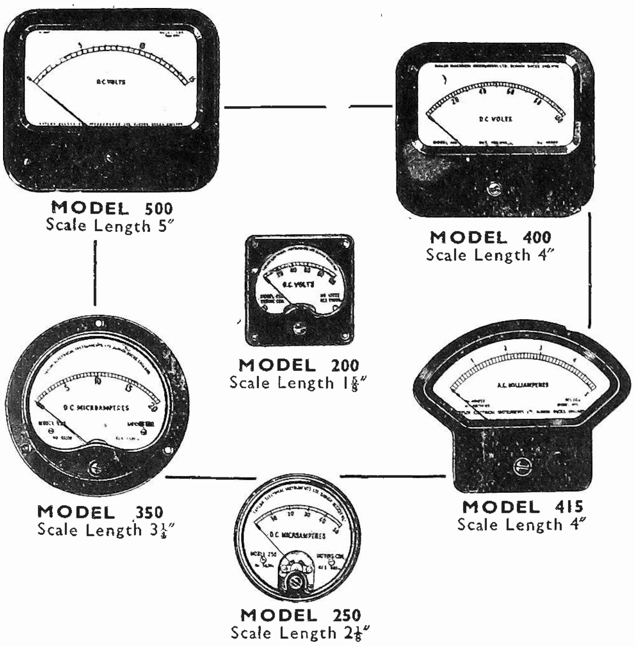

TAYLOR FOR LASTING ACCURACY

These panel instruments are available as moving coil, rectifier and thermo-couple types and cover a wide range of measurements. Series 350, 400, 415 and 500 are also available as moving iron instruments for use on A.C. or D.C.

IMMEDIATE DELIVERY of most types and ranges

Taylor
TESTING & MEASURING EQUIPMENT

TAYLOR PRODUCTS INCLUDE: MULTIRANGE A.C./D.C. TEST METERS ● SIGNAL GENERATORS ● VALVE TESTERS ● A.C. BRIDGES ● CIRCUIT ANALYSERS ● CATHODE RAY OSCILLOGRAPHS ● HIGH AND LOW RANGE OHMMETERS ● OUTPUT METERS ● INSULATION TESTERS ● MOVING COIL INSTRUMENTS

TAYLOR ELECTRICAL INSTRUMENTS LTD.
419-424, MONTROSE AVENUE, SLOUGH, BUCKS, ENGLAND
Telephone : SLOUGH 21381 (4 lines) *Grams & Cables :* TAYLINS SLOUGH

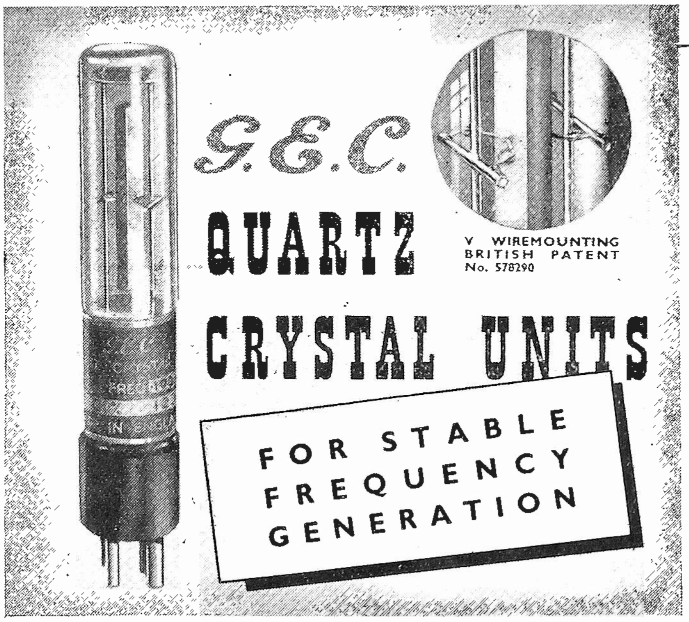

The type JCF/200 unit illustrated above is representative of the wide range of vacuum type unit available for low and medium frequencies.

FOR FREQUENCY SUB-STANDARDS

Type JCF/200, 100 KC/S

Available from stock adjusted to ± 0·01%. Higher accuracies supplied to special order.

FEATURES

Low temperature co-efficient — less than 2 in 10^6 per °C.

Patented nodal suspension.

Mounted in vacuum; performance independent of climatic conditions.

Exceptionally high Q value.

High stability.

Small size, 3"×⅝" overall excluding pins.

Fits standard miniature deaf aid valve socket.

Price £2-15-0

SALFORD ELECTRICAL INSTRUMENTS LTD.
PEEL WORKS, SALFORD 3, LANCS. *Telephone BLAckfriars 6688 (6 lines) Telegrams and Cables SPARKLESS Manchester*

Proprietors: **THE GENERAL ELECTRIC Co, Ltd., of England**

The Greatest Advance yet !

100 Kc/s to 100 Mc/s

ON FUNDAMENTALS

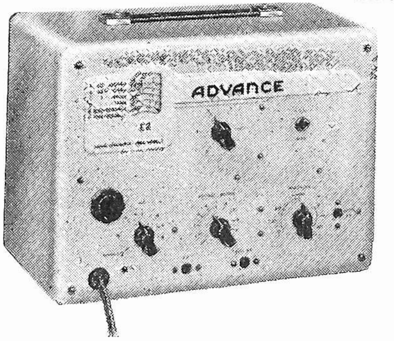

Range: 100 *Kc/s.—100 Mc/s. in 6 bands.*
Frequency: *Guaranteed within* ±1%.
Output: *Approx. 1 volt unattenuated and variable from 1 μV to 100 mV into a 75 ohm load through a matched transmission line.*
Stray Field: *Less than 3μV at 100 Mc/s.*
Illuminated Dial: *Total scale length, 30 in.*
Power Supply: 100 — 210 — 230 — 250 volts. 40-100 c/s.
Dimension: 9½ *in. high* × 13 *in. wide* × 8 *in. deep.*
Weight: 15 *lb.*

The new Advance Signal Generator, Type E.2, has all the advantages of the popular Model I plus a greatly extended range to cover the Birmingham Television frequencies. The wider range, 100 Kc/s. to 100 Mc/s., gives greater scope for advanced experimental work than ever before.

Send for fully descriptive leaflet.

In common with the earlier model the new generator offers an instrument of laboratory standard at a price within the reach of moderate purses. The remarkably high frequency accuracy of ±1% extends over the whole range.

Advance TYPE E2
SIGNAL GENERATOR

ADVANCE COMPONENTS LTD.,
Back Road, Shernhall Street, Walthamstow, London, E.17
Tel.: LARkswood 4366/7/8

PORTABLE TYPE TEST METERS

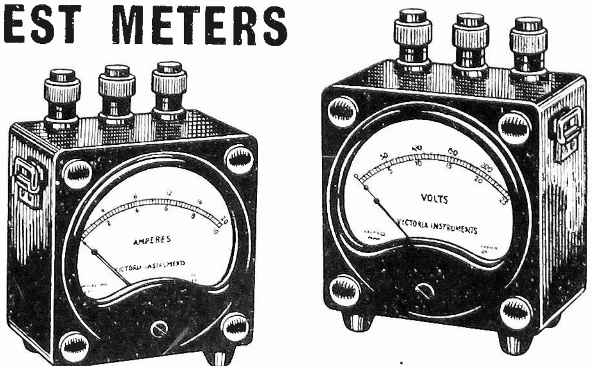

The advantages of individual test meters, as opposed to the multi-type test meters are very numerous, one being that the complete test equipment is not monopolized by one operator, also that unlike multi-test instruments, simultaneous measurements can be made. Greater stability of calibration is maintained due to terminal or socket selection of ranges. These instruments can also be supplied with moving iron movements. Write for illustrated folder and price list of complete range.

Individual application. Moving Coil movements. Economy. Up to four ranges of either Volts or Amps, A.C. or D.C. or OHMS in one Unit. Current transformers incorporated for A.C. Amps.

Size 3¾" × 3¾" × 2½" overall. Complete with carrying strap

VICTORIA INSTRUMENTS
Prop. V.I.C (Bournemouth) Ltd.
MIDLAND TERRACE · LONDON · N.W.10
Telephone ***ELGAR 7871-2***

Victoria Instruments are made uncommonly well

Only *with* CO-AX *R.F.* CABLES

AIR-SPACED ARTICULATED

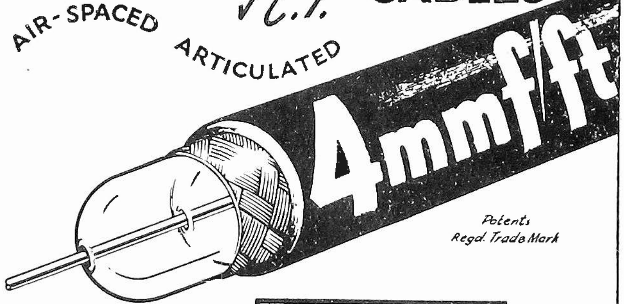

Patents
Regd. Trade Mark

THE LOWEST EVER CAPACITANCE OR ATTENUATION

IMMEDIATE DELIVERIES FOR HOME & EXPORT

Write or cable for data sheets or deliveries to the Originators of flexible air spaced RF Cables

TRANSRADIO LTD.
CONTRACTORS TO H.M. GOVERNMENT
138A CROMWELL ROAD, LONDON, S.W.7
Cables: TRANSRAD. LONDON.

LOW ATTEN. TYPES.	IMPED OHMS	ATTEN. db/100ft at 100 Mc/s.	LOADING Kw.	O.D."
A 1	74	1.7	0.11	0.36
A 2	74	1.3	0.24	0.44
A34	73	0.6	1.5	0.88

HIGH POWER FLEXIBLE

LOW CAPAC. TYPES.	CAPAC. mmf/ft	IMPED. OHMS.	ATTEN. db/100ft 100 Mc/s	O.D."
C 1	7.3	150	2.5	0.36
P.C.1	10.2	132	3.1	0.36
C 11	6.3	173	3.2	0.36
C 2	6.3	171	2.15	0.44
C22	5.5	184	2.8	0.44
C 3	5.4	197	1.9	0.64
C33	4.8	220	2.4	0.64
C44	4.1	252	2.1	1.03

PHOTOCELL CABLE

VERY LOW CAPACITANCE

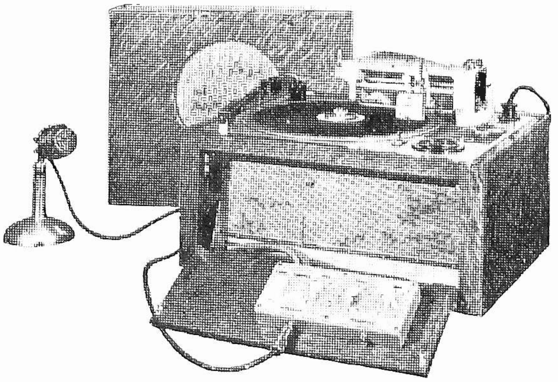

BROWN - E.R.D. 13 inch Portable Disc Recorder

An important S. G. Brown product

Brown - E.R.D.

DISC RECORDER

Incorporating the latest advances in Sound-on-Disc Recording

Write for interesting brochures presenting full technical details of this latest development in Sound-on-Disc recording. Also 17 inch models for the Professional user.

S. G. BROWN, LTD., *Shakespeare St.,* **WATFORD**

Established in Electro Acoustics and high precision Engineering for over 40 years. Manufacturers of the world-famous 'BROWN' Gyro Compass.

Telephone: WATFORD 7241.

A NEW B.P.L. INSTRUMENT

THE VOLTASCOPE—A combined valve-voltmeter and oscilloscope. VALVE-VOLTMETER — Infinite Input Resistance for D.C. ranges 0 to 300 volts. A.C. ranges 0 to 150 volts in 5 ranges. 3½-inch scale meter. OSCILLOSCOPE—3-inch screen tube provided with balanced amplifiers for Y and X plates giving a 5 times trace expansion. Maximum sensitivity 150mV/cm. Response from D.C. to 100 Kc/s.

Limited quantity available for early delivery.

BRITISH PHYSICAL LABORATORIES
HOUSEBOAT WORKS, RADLETT, HERTS.
Tel : Radlett 5674-5-6

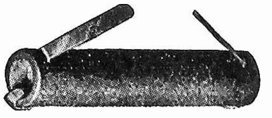

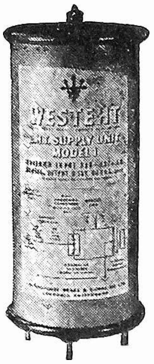

SIMPLE and RELIABLE E.H.T. SUPPLIES

Type 36EHT rectifier. Two such units only 2½″ long by $\frac{7}{16}$″ dia. will give an output of 5.3 KV.

" Westeht " E.H.T. supply unit. 5 KV output from a 350-0-350 AC input without the use of an E.H.T. transformer.

E.H.T. from the line flyback transformer, or from the normal 350-0-350 volts winding of the mains transformer . . . or, if you prefer it, from an E.H.T. transformer. You get it most easily by the use of

WESTINGHOUSE
WESTALITE
METAL RECTIFIERS

Write for data sheets Nos. 52 and 60 to Dept. E.E.2

WESTINGHOUSE BRAKE & SIGNAL Co. Ltd.,
82, York Way, King's Cross, London, N.1.

TELCON TCM LTD

METALS

Magnetic Alloys
MUMETAL · RADIOMETAL · RHOMETAL

Electrical Resistance Alloys
PYROMIC · CALOMIC · TELCUMAN

TELCOSEAL *Glass Sealing Alloys*

THERMOSTATIC BIMETALS *in various grades*

BERYLLIUM-COPPER (CuBe. 250)
AGE-HARDENING ALLOY

Special alloys made to order.
Full information furnished on request.

★ Ask also for Details of Telcon Thermoplastic Products.

THE TELEGRAPH CONSTRUCTION & MAINTENANCE CO. LTD.
Founded 1864
Head Office: 22 OLD BROAD ST., LONDON, E.C.2. Tel. LONdon Wall 3141
Enquiries to TELCON WORKS, GREENWICH, S.E.10. Tel: Greenwich 3291

MODERN SERVICING METHOD

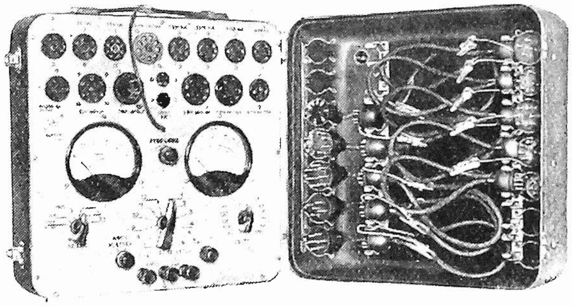

The " L.S.L." Servicing Method is a combined fault analyser and circuit tester; simultaneously capable of indicating all voltage, current and resistance on each valve electrode without removing the chassis from the cabinet. Readings can be taken whilst the set is under actual operating conditions. The " L.S.L." Analyser is a combination of multi-range instrument and valve tester.

PRICE : £18 . 18 . 0 Subject.

THE "LSL" PORTABLE ANALYSER

★ Saves time and trouble. ★ Greatly increases Profit in the Service Department. ★ Is portable, can be used on the bench or in the home. ★ Is simple to operate.

Send for further particulars from the sole distributors:

Kerry's (GREAT BRITAIN) *Limited*

WARTON ROAD, STRATFORD, LONDON, E.15.
Telephone: Maryland 6611 *AND BRANCHES*
Export Address: 23-26 St. DUNSTANS HILL, E.C.3

CONSISTENTLY *Accurate*

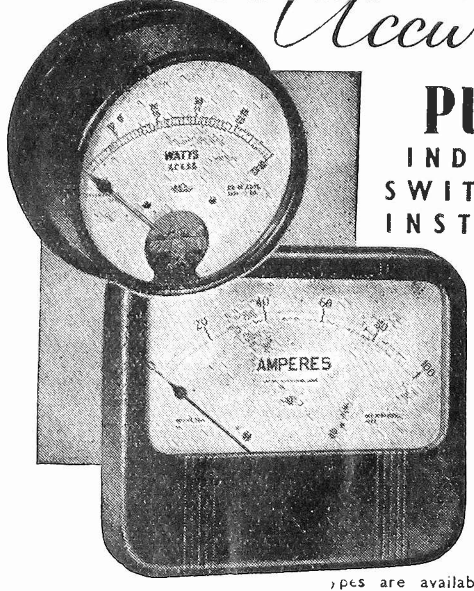

PULLIN

INDUSTRIAL SWITCHBOARD INSTRUMENTS

PULLIN Type S Industrial Switchboard Instruments are completely new in design. The 4" and 6" Round Projecting Type case is of pressed steel, has a full open dial, and can be converted easily to flush type by using a separate fitment. The 6" dial rectangular pattern has a clean open scale. All types are available in Moving Iron, Moving Coil or Dynamometer Pattern.

MIP

We can give early deliveries—write for details

Address all enquiries to

MEASURING INSTRUMENTS (PULLIN) LTD
Dept. E, Electrin Works, Winchester Street, London, W.3
Telephone : ACOrn 4651/3 & 4995.

Photo-Electric and Electronic Controls

Industrial Applications include:

- SMOKE DENSITY INDICATOR
- SMOKE ALARM
- LIGHTING CONTROL (Dusk to Dawn)
- COUNTING UNIT
- INVISIBLE RAY BURGLAR ALARM
- TURBIDITY INDICATOR
- FLAME FAILURE CONTROL

RADIOVISOR PARENT LTD
1, STANHOPE STREET, LONDON, N.W.1
Telephone: EUSton 5905/6

5ft. 80W

FLUORESCENT FITTING
complete with tube

£4 19. 6d.

plus 4s. purchase tax on tube

The greatest value in
The British Isles

Details from

Scemco Ltd.
Scemco House,
Soho Street,
London, W.1.

Telephone : GERrard 1461-2-3

"UNO"

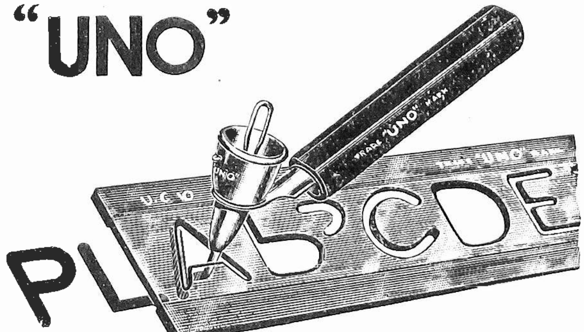

PEN STENCILS

BIF
1949
MAY 2-13
OLYMPIA &
EARLS COURT
SEE OUR EXHIBIT
Stand No. C.118/114
OLYMPIA

ASK West's advice on :

- *Drawing Office Equipment*
- *Sensitized Papers*
- *Blue Prints and Dye Line Prints*
- *True-to-scale Prints*
- *Surveying Equipment*

We can help you from start to finish

A. WEST & PARTNERS LTD.
36 BROADWAY, WESTMINSTER, S.W.1

STANDS UP TO HARD USE

because —

Made principally of steel
Steel-preserving electrolyte
Fully enclosed active materials
Practically free from self-discharge

N.3.F.

NIFE
STEEL BATTERIES

(N.B. Nife batteries are not yet available for private cars or domestic radio.)

NIFE BATTERIES · REDDITCH · WORCESTERSHIRE

FIRST ANNOUNCEMENT

"SOUND MAGNET" TAPE RECORDING OUTFIT £30

Records—playback—erase, speech and music by exclusive method for high quality. With amplifier and speaker in leather cloth case.

"CAR ANNOUNCER" MOBILE P.A. OUTFIT £15

For smallest car, sports events, traffic control, election campaigns.

"HI-LOW" DUAL CHANNEL GRAMO AUDIO £12

Separate amplifiers, driving 10 in. and 2½ in. units for quality. Also available as kit.

"CAR-PAL" DUAL PURPOSE SUPERHET £15

Car-radio or portable as desired. Superhet with H.F. stage from Vibrapack.

Threepence in stamps brings you data any of the above new productions

Mention "E.E." in your enquiry.

GENERAL LAMINATION PRODUCTS LTD.
Dept. S.R. 294, Broadway, Bexleyheath, Kent.

METAL CABINETS & CHASSIS

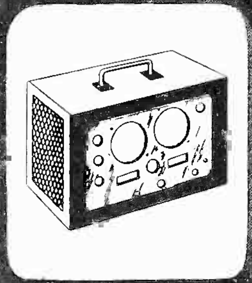

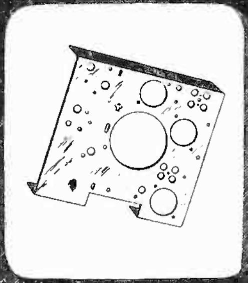

METAL LETTERS
FOR SHOP FRONTS & SIGNS
in Staybrite + Enamelled Steel
STEEL SHELVING AND STORAGE RACKS
FLUORESCENT LIGHTING FITTINGS
Write for our leaflet
CHASE PRODUCTS (ENGINEERING) LTD.
27 PACKINGTON ROAD, LONDON, W.3. ACORN 1153-4

HIGH VACUUM PUMP APPARATUS

for the production of metal coatings on glass

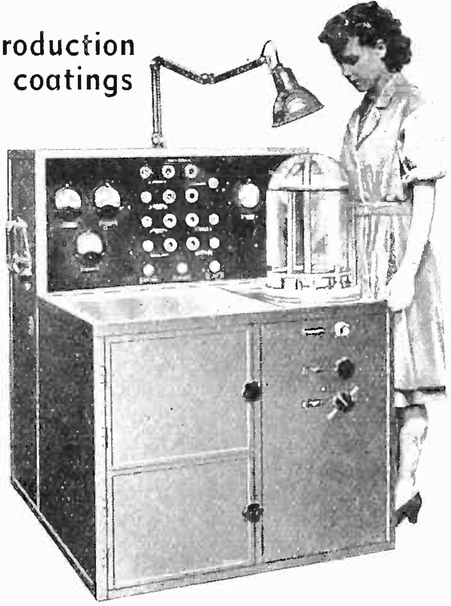

BARR & STROUD Ltd.
Works: ANNIESLAND, GLASGOW, W.3.
London Office: 15, VICTORIA ST., S.W.1.

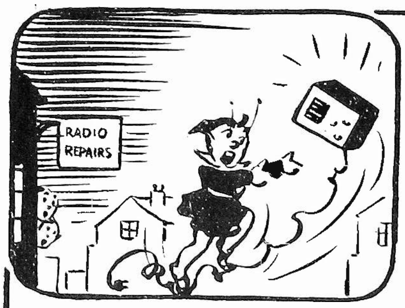

THE "FLUXITE QUINS" AT WORK

"That's the tenth we've
mended today
Now OI, be off on your
way.
Come on. Show some
speed
Look out! Mind the
lead. . . . "
"More FLUXITE
needed" bawled EH.

For all SOLDERING work—you need FLUXITE—the paste flux—with which even dirty metals are soldered and "tinned." For the jointing of lead—without solder; and the "running" of white metal bearings—without "tinning" the bearing.

It is suitable for ALL METALS—excepting ALUMINIUM—and can be used with safety on ELECTRICAL and other sensitive apparatus.

With Fluxite Joints can be "wiped" successfully, that are impossible by any other method

Used for over 40 years in Government Works, and by leading Engineers and Manufacturers. OF ALL IRONMONGERS—IN TINS—10d., 1/6 and 3/-.

The "Fluxite Gun" puts Fluxite where you want it by a simple pressure. Price 1/6, or filled 2/6.

ALL MECHANICS *WILL* HAVE

FLUXITE

IT SIMPLIFIES *ALL* SOLDERING

Write for Leaflets on CASE HARDENING STEEL and TEMPERING TOOLS with FLUXITE also on "WIPED JOINTS." Price 1d. each.

FLUXITE LTD. (Dept. T.V.) Bermondsey St., London, S.E.1

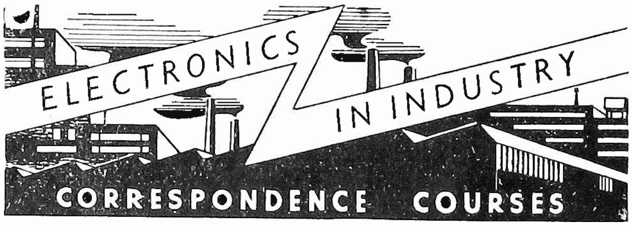

INCREASED PRODUCTION

The answer to many problems in speeding up and improving Industrial Production lies in the use of ELECTRONIC METHODS.

POSTAL COURSES

E.M.I. Institutes, an associate of Britain's largest group of Electronic Companies ("His Master's Voice", Marconiphone, etc.), have prepared a POSTAL COURSE specially suited to the needs of Industrial Executives and Technicians as well as to those of students.

The Course gives sound basic knowledge of all the main industrial applications of Electronics.

WRITE FOR FREE BOOKLET giving full details of this and other Postal and Attendance courses.

ADVICE ON INDUSTRIAL ELECTRONIC PROBLEMS

An experienced consultation service is available to those who have problems of production or research which might be solved by Electronic methods.

E.M.I. INSTITUTES

DEPT. 11, 43 GROVE PARK ROAD, CHISWICK,
LONDON, W.4. TELEPHONE: CHIswick 4417/8

E.114

SOLONS FOR YOUR SOLDERING JOBS!

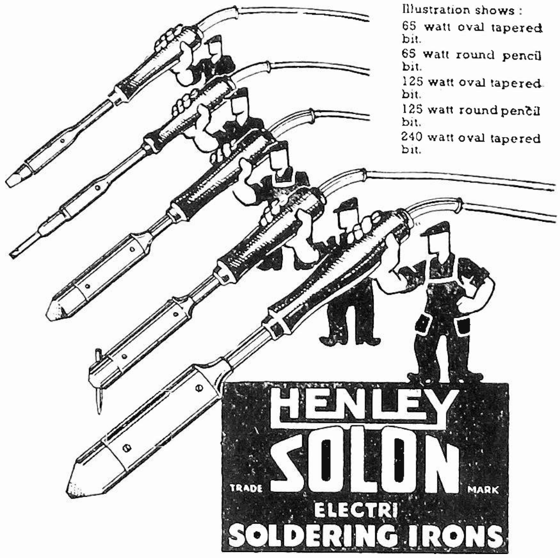

Illustration shows:
65 watt oval tapered bit.
65 watt round pencil bit.
125 watt oval tapered bit.
125 watt round pencil bit.
240 watt oval tapered bit.

These five models will satisfy practically every soldering demand whether for the occasional household job or continuous soldering under workshop or factory conditions. With the Solon the heat is in the bit itself . . . continuously . . . hour after hour; all connections housed at end of handle away from heat. Each model complete with 6 feet Henley 3-core flexible. Now available from stock. Write for folder Y.10.

W. T. HENLEY'S TELEGRAPH WORKS CO. LTD.
51-53 Hatton Garden, London, E.C.1

AMBITIOUS ENGINEERS

HAVE YOU HAD *YOUR* COPY OF "ENGINEERING OPPORTUNITIES"?

Whatever your age or experience—you must read this highly informative guide to the best paid engineering posts. The handbook contains particulars of **A.M.I.C.E., A.M.I.Mech.E., A.M.I.E.E., A.M.I.M.I., A.M.Brit.I.R.E.,** and other important Engineering Examinations, and outlines home-study courses in all branches of **Civil, Mechanical, Electrical, Automobile, Radio and Aeronautical Engineering, Government Employment, Draughtsmanship, Building and Plastics, Matriculation, etc.**

We Guarantee
"NO PASS — NO FEE"

If you are earning less than £10 a week you cannot afford to miss reading "**Engineering Opportunities.**" It tells you everything you want to know to secure your future. Write for your copy of this enlightening guide to well paid posts NOW—FREE and without obligation.

BRITISH INSTITUTE OF ENGINEERING TECHNOLOGY
337A, Shakespeare House, 17/19, Stratford Place, London W.1

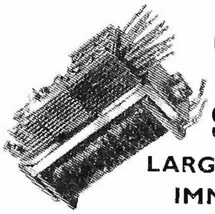

RELAYS AND SWITCH KEYS

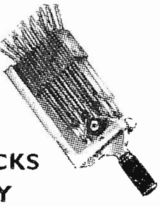

LARGE EX-GOVT. STOCKS
IMMEDIATE DELIVERY

Types 600 - 3000 Relays – Also High Speed

Large quantities of Telephone Components, Carbon Insets, Balanced Armature Insets, Plugs, Jacks, Condensers, Co-Axial Cables

JACK DAVIS
Dept. E.E.
30 PERCY STREET, LONDON, W.1
Telephone: MUSeum 7960

from the range of ⓔ *instruments*

The CONSTAC
Constant Voltage Transformer

A versatile transformer which provides a fully stabilised 6.3V heater supply in addition to a variety of stabilised H.T. outputs. Originally designed for use in E.I.L. instruments, the CONSTAC * is now available to manufacturers of high grade equipment.

**Made under licence by The Banner Electric Co., Ltd.*

Input: 230V. 50 c/s.
L.T. Output: 6.3V. 2 A.
H.T. Output: 350V. 25 mA or 700v. 15 mA or 350V. 15 mA, 170V. 25 mA

ELECTRONIC INSTRUMENTS LTD
17 PARADISE ROAD · RICHMOND · SURREY

R·R
PRODUCTS

Transformers . Amplifiers
Electrical Control Gear
Electronic Development &
Manufacturing for Industry

●

TELEPHONE BRADFORD 24902

R.R. DEVELOPMENT LABORATORIES LTD
BARNARD RD . BRADFORD . YORKSHIRE

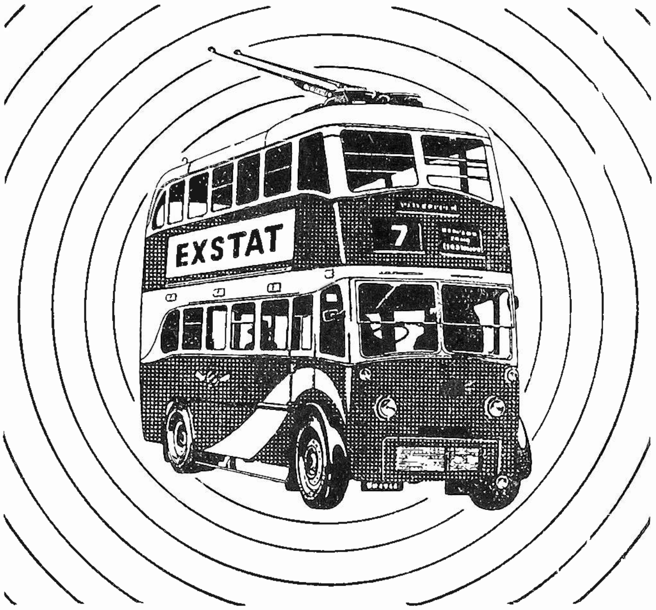

INTERFERENCE SUPPRESSION

THE 'EXSTAT' (Regd.) Aerial is designed to cut the annoyance of electrical interference and to ensure crystal-clear reception at the receiver.

When selling a radio set remind your customer that the better the set the greater the need for a first-class anti-interference aerial. **Every set sale should lead to an aerial sale.**

Erected horizontally, the 'EXSTAT' will feed 6 to 9 receivers, or vertically, 3 receivers, **and is an essential fitting for all Dealers' Showrooms.**

The 'EXSTAT' AERIAL

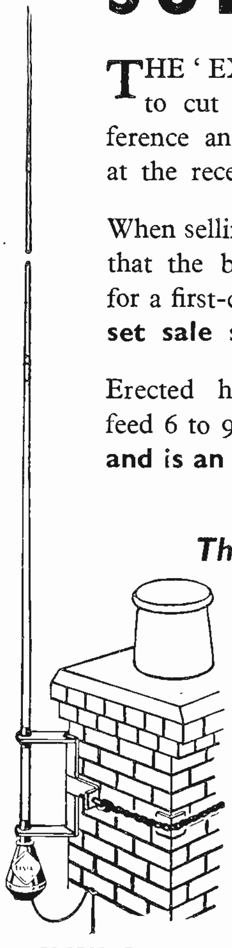

Model ASA 112, illustrated, comprises 15 ft. vertical rod with lashing mounting, 2 transformers, and 20 yards of screened cable.

List Price £7 3s. 0d.

ON DISPLAY STAND NO. 45
R.C.M.F. EXHIBITION, MAR. 1-3

ANTIFERENCE
LIMITED
67, BRYANSTON ST., LONDON, W.1

A22

★

LOW LOSS CERAMICS

★

Success through constant research

★

CAN WE HELP YOU?

Please ask for pamphlets R.T.1 and R.T.2

PROMPT DELIVERY

TAYLOR TUNNICLIFF

(REFRACTORIES) LTD.

Albion Works, Longton,
Stoke-on-Trent, Staffs.

London Office :
125 High Holborn, W.C.1
'Phones : Stoke-on-Trent 5272
and Holborn 1951

★

INDEX TO ADVERTISERS

Electronic
ACCESSORIES & COMPONENTS

HH

For Research Depts., Laboratories, Colleges, etc.
Send for List.

HOLIDAY & HEMMERDINGER LTD
74-78, HARDMAN ST., DEANSGATE
MANCHESTER 3 · TEL. DEA. 4121/2

W.D. TELEVISION RECEIVER

WE INVITE YOU TO CALL ANY DAY during television transmitting time, to see this excellent little receiver working. You can make this from Government surplus radar equipment. Send 7/6 without delay for the easy-to-follow instructional data. All components are available ex stock again, but

ORDER WITHOUT DELAY

W.D. SALES
10, Electron House,
Windmill Hill, Ruislip Manor, Middx.

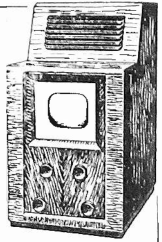

L.T.P. REWIND SERVICE

All rewinds are Layer Wound, Vacuum Impregnated, Pressure tested at 2,000 volts and guaranteed for three months.

48 hour service.

Enquiries :
London Transformer Products Ltd.
L.T.P. Works, Cobbold Estate,
Willesden, London, N.W.10
Telephone WILLesden 6486

WE OFFER

A large range of used and new Test Equipment, Converters, Recorders, Amplifiers, Motors, Transformers, etc.

All guaranteed and at very attractive prices.

We buy good modern used equipment of all types for spot cash.

UNIVERSITY RADIO LTD.
22 LISLE STREET, LONDON, W.C.2.
Tel. GER 4447 and GER 8582.

NEW *SMALL* PROCESS TIMERS

$5\frac{3}{4}'' \times 6'' \times 5\frac{1}{8}''$

For flush or wall mounting.

Type JPS. Hand Resetting Timer.

Type SRJ. Automatically Resetting Timer.

BOTH SYNCHRONOUS

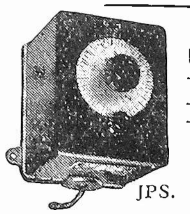

JPS. *Ask for Lists 120 & 121/EO*

LONDEX LTD

Manufacturers of Relays

207, ANERLEY RD., LONDON, S.E.20. SYDenham 6258-9

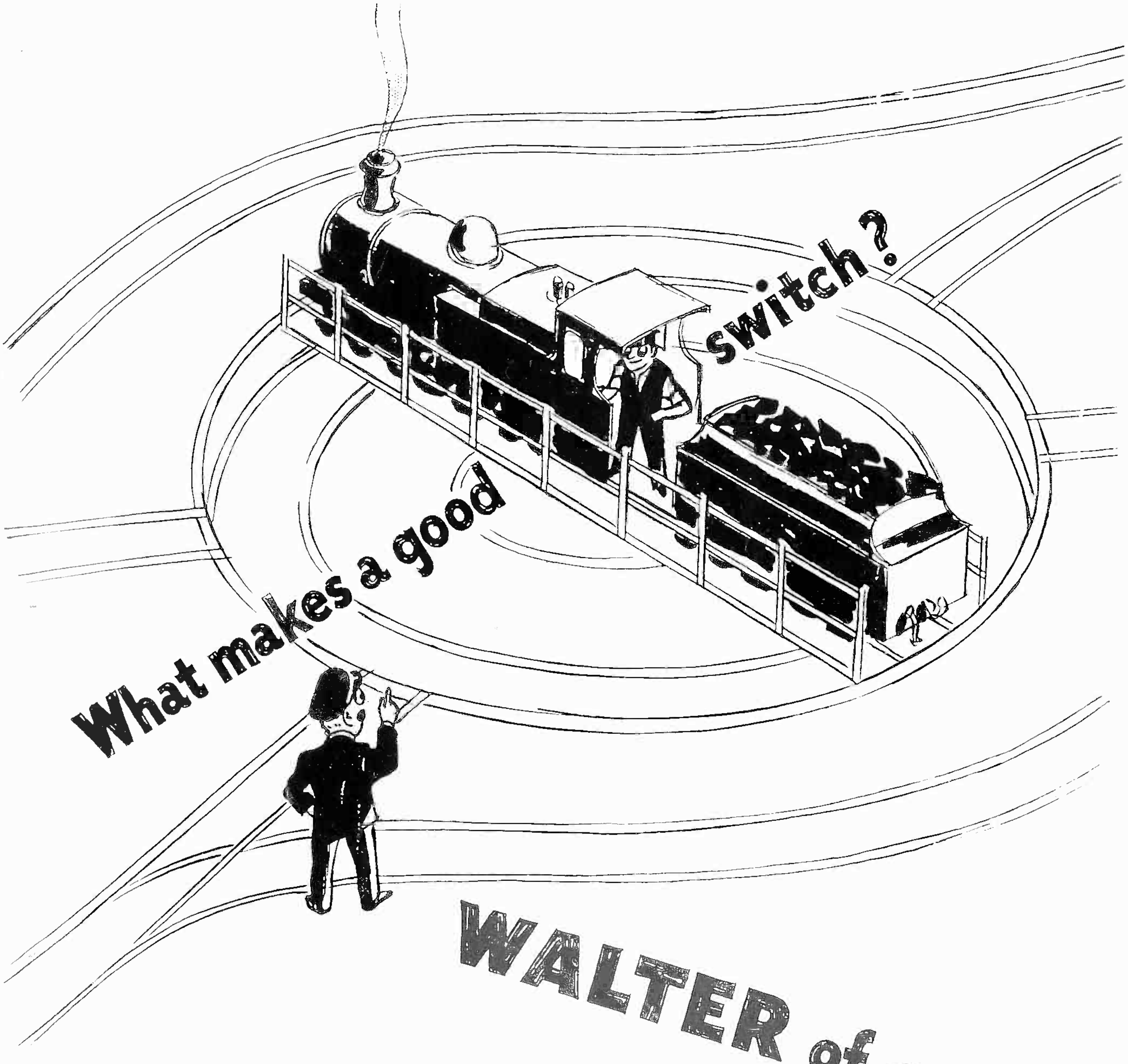

Walter Instruments

LIMITED

GARTH ROAD · LOWER MORDEN · SURREY · TELEPHONE: DERWENT 4421-2-3

DESIGNERS AND MAKERS OF SWITCHES AND CAPACITORS

CRC 41

NINE EXAMPLES

from the

"FLEXILANT"

(RUBBER BONDED TO METAL)

RANGE

of

MOUNTINGS

•

OBTAINABLE FROM STOCK

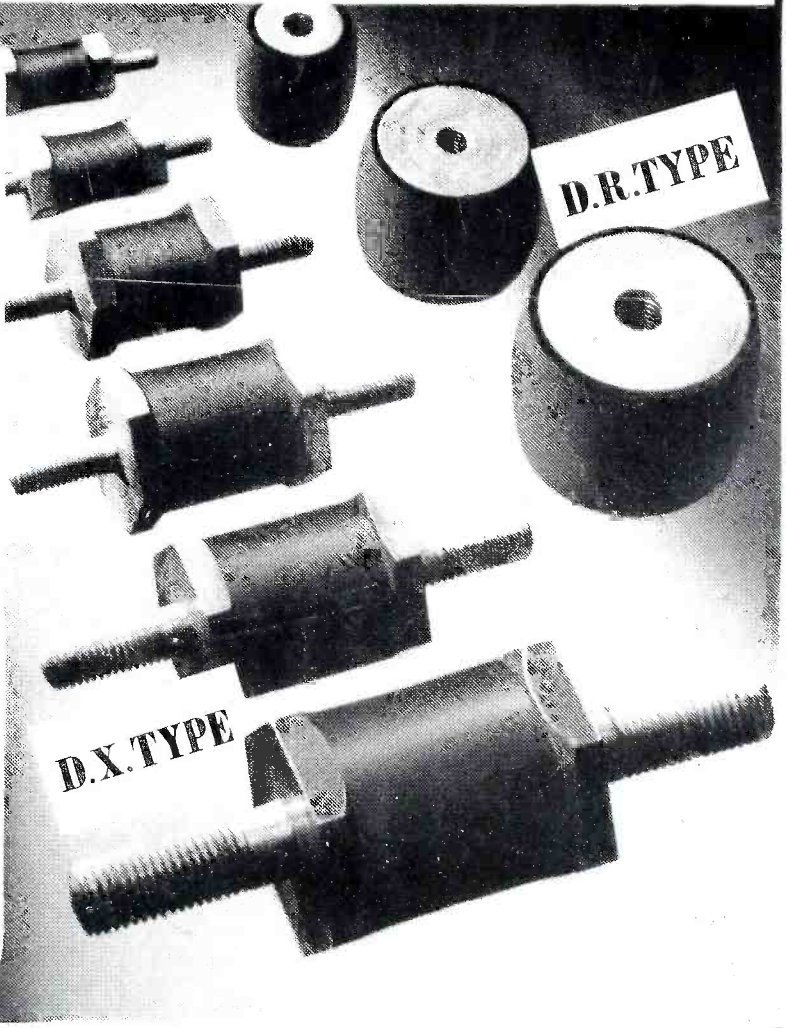

OUR TECHNICAL STAFF investigates all mounting problems May it investigate yours?

RUBBER BONDERS LIMITED

ENGINEERS IN RUBBER BONDED TO METAL

FLEXILANT WORKS

DUNSTABLE · BEDS.

TELEPHONE: DUNSTABLE 803 [illegible]

R B 67

Printed in Great Britain by The Press at Coombelands, Ltd., Addlestone, Surrey, for the Proprietors, Morgan Brothers (Publishers) Ltd., 28, Essex Street, Strand, W.C.2.
Registered for Transmission by Canadian Magazine Post